ENVIRONMENTAL

Environmental Engineers, Geologists and Scientists

Tel 847.573.8900
Fax 847.573.8953

Polo Park Business Center
27834 N. Irma Lee Circle
Lake Forest, Illinois 60045-5130

APPLICATION FOR LIQUID WASTE HANDLING FACILITY PERMIT
GREEN ERA RENEWABLE ENERGY & URBAN FARMING CAMPUS
650 WEST 83RD STREET
CHICAGO, ILLINOIS 60620-1937

February 11, 2022

DAI Project # 7741

Prepared For:
Green Era 83rd Street, LLC
218 North Jefferson Street, Suite 300
Chicago, Illinois 60661-1307

Prepared By:
DAI Environmental, Inc.
27834 North Irma Lee Circle
Lake Forest, Illinois 60045

TABLE OF CONTENTS

LIST OF FIGURES i

LIST OF ATTACHMENTS i

LIST OF FIGURES

Site Location Map ..... Figure 1
Topographic Detail of Facility and Surrounding Area ..... Figure 1A
Aerial View of Site and Surrounding Property Usage ..... Figure 2
Site and Surrounding Area Zoning Map ..... Figure 2A
Site Plan and Contour Map ..... Figure 3
Site Detail Showing Process Operations and Equipment ..... Figure 3A
Process Flow Diagram and Water Usage/Water Discharge Schematic ..... Figure 4

LIST OF ATTACHMENTS

PROJECT GENERAL DESCRIPTION NARRATIVE ..... ATTACHMENT 1
MP-01: OPERATIONS MANUAL ..... ATTACHMENT 2
OWNER'S AUTHORIZATION LETTER ..... ATTACHMENT 3
TAX DOCUMENTATION ..... ATTACHMENT 4
ZONING DOCUMENTATION ..... ATTACHMENT 5
FIGURES ..... ATTACHMENT 6
FULL-SCALE DRAWINGS ..... ATTACHMENT 7
PLAT OF SURVEY ..... ATTACHMENT 8
UTILITY RELATED DOCUMENTATION ..... ATTACHMENT 9
EQUIPMENT SPECIFICATIONS ..... ATTACHMENT 10
CITY OF CHICAGO DEPARTMENT OF BUILDINGS
STORMWATER DESIGN APPROVAL AND CALCULATIONS ..... ATTACHMENT 11
MWRD DISCHARGE AUTHORIZATION REQUEST ..... ATTACHMENT 12
ENVIRONMENTAL ASSESSMENT DOCUMENTATION ..... ATTACHMENT 13
GEOTECHNICAL REPORT ..... ATTACHMENT 14
SPCC PLAN ..... ATTACHMENT 15
WASTE CONTROL PLAN ..... ATTACHMENT 16
ODOR CONTROL & MONITORING PLAN ..... ATTACHMENT 17
CHICAGO PUBLIC SCHOOL'S PERMISSION LETTER ..... ATTACHMENT 18
FEMA FLOOD MAP ..... ATTACHMENT 19
ENDANGERED SPECIES/SENSITIVE AREA DOCUMENTATION ..... ATTACHMENT 20
FUGITIVE DUST OPERATING PROGRAM ..... ATTACHMENT 21

INTRODUCTION

An 8.905± acre formerly vacant property addressed as 650 West 83rd Street in Chicago is being developed into a food waste (solid and liquid) recycling facility. A recycling facility permit application was submitted to the Chicago Department of Public Health (Chicago DPH) for this food waste recycling facility. The method of recycling to be performed by the facility is conventional wet anaerobic digestion. The Illinois Environmental Protection Agency (Illinois EPA) views the anaerobic digestion of food waste as "in-vessel composting," and defines composting as "the biological treatment process by which microorganisms decompose the organic fraction of waste, producing compost." Therefore, an application for a solid waste permit was submitted to Illinois EPA. Additionally, the facility will operate various air emitting equipment, requiring air permits with Illinois EPA and the City of Chicago. As a result of the anaerobic digestion process, wastewater will be discharged to the Metropolitan Water Reclamation District of Greater Chicago (MWRD). Therefore, a Discharge Authorization Request has been submitted. A summary of the completed permit applications and review status are provided below.

- Illinois EPA solid waste: *Application for Permit to Develop a Solid Waste Composting Facility* (March 31, 2021) and *Response to Requests for Additional Information* (December 13, 2021) – presently under review
- Chicago DPH recycling: *Recycling Facility General Application for Permit* (March 31, 2021) submitted under cover letter dated April 29, 2021 – review pending submission of Chicago Liquid Waste Handling Facility application
- Illinois EPA air: *Application for Joint Construction Permit and Lifetime Operating Permit* (May 24, 2021) and *Reapplication for Joint Construction Permit and Lifetime* (October 27, 2021) – presently under review
- Chicago DPH air: *CDPH Air Quality Permit – Air Quality Control Permit* (June 1, 2021, via online permitting portal)
- MWRD: Discharge Authorization Request (November 4, 2021), *Updated/corrected information* (November 22, 2021), and *Information clarification* (January 27, 2022) – presently under review

DAI is providing the Chicago Department of Public Health concurrently by email to this Application submittal, a link to a Dropbox folder containing the most current and complete versions of each of these applications, as well as other relevant correspondence to and from the regulators.

3.0 Application for a Permit.

Pursuant to Section 11-4-250 of the Municipal Code of the City of Chicago, all waste handling and disposal facilities within the city of Chicago are required to apply for and receive a permit from the Department of Environment…applications for existing, expanding or new facilities must include the information in Section 11-4-1520 of the Municipal Code of the City of Chicago…

Based upon information provided to the Chicago DPH in the *Recycling Facility General Application for Permit* dated March 31, 2021, an application for a new liquid waste handling facility is also required. This submission provides the permit application information required by Section 11-4-1520 of the Municipal Code of the City of Chicago, as well as the applicable sections of the *Rules and Regulations for Landfills, Liquid Waste Handling Facilities and Transfer Stations Operated within the City of Chicago.*

3.1. New, Expanding, or Modifying Facility Permit Application.

New, expanding, and modifying facilities must submit an application and receive a permit prior to beginning operations or, for existing facilities, prior to expanding or modifying their operations. Modifications which will require approval of DOE include, but are not limited to, changes in capacity, changes in the nature of the facility's operations, changes in facility ownership, changes in facility configuration, and changes in the nature of the process. The application requirements and contents are described below.

It is understood that the permit must be granted by the City of Chicago DPH prior to beginning operations.

3.1.1. Submittal Requirements. *The Applicant shall submit one (1) bound original and one (1) unbound copy of all documents. The Applicant shall submit one (1) set of full-size scale drawings along with 11" by 17" or similar size reductions of all drawings in each set of application documents. It is City policy that recycled paper be used and that documents, including the permit application, shall be printed on both sides of each page whenever practicable. At a later time, the Department of Environment may give the applicant the option to file the application as computer files on magnetic and/or optical media.*

This application will be submitted to the Chicago DPH as directed.

3.1.2. Application Content. *The application for a permit shall include:*

> ***3.1.2.1.*** *The information required under Section 11-4-1520 of the Municipal Code which is specified in Section 4.0 of these regulations for landfills, Section 8.0 of these regulations for liquid waste handling facilities, and Section 12.0 of these regulations for transfer stations.*

This submission provides all permit application information required by Section 11-4-1520 and Section 8.0 for a liquid waste handling facility.

3.1.2.2. Applicant Summary. *The application for a permit shall clearly identify the person, partnership, or corporation that is applying for the permit. In the case of a sole-proprietorship, the application for a permit shall include the name, address, and phone number of the owner of the proprietorship. In the case of a partnership or corporation, the application for a permit shall include the name, address, contact name, and phone number of the partnership or corporation.*

The property owner is Green Era Educational NFP, a not-for-profit corporation governed by a board of directors whose members are Julia Feldman, Erika Allen, and Jason Feldman. The owner and operator of the facility and associated equipment (and entity to be permitted) is Green Era 83rd Street, LLC. Green Era 83rd Street LLC is entirely managed by Green Era Sustainability LLC.

The beneficial owners of Green Era Sustainability LLC are as follows:

ILE Yansa LLC (32%)
300 South Wacker Drive, Suite 2750
Chicago, IL 60606-6782
FEIN: 85-2144079
Manager: Erika R. Allen

Chicago Community Partners LLC (31%)
218 N Jefferson Street, Suite 300
Chicago, IL 60661
FEIN: 46-2564872
Manager: Jason Feldman

Kleen Energy LLC (20%)
W3267 Snake Road
P.O. Box 190
Lake Geneva, WI 53147
FEIN: 81-4806298
Manager: Leigh Otzen

Elm Tree Corporation (9%)
1365 Elm Tree Road
Lake Forest, IL 60045
FEIN: 2211248
President: Ryan S. Huddlestun
Secretary: Krina N. Huddlestun

Racial and Social Equity Investors, LLC (7%)
1200 West 35th Street, #3105A
Chicago IL 60609
FEIN: 85-2092077
Manager: Erika R. Allen

GAGDC Investor, LLC (1%)
1159 West 79th Street
Chicago IL 60620
FEIN: 86-1595447
Manager: Hubert Newkirk

3.1.2.3. Facility Summary. *A facility summary shall be included with the application for a permit. This facility summary shall contain the following information:*

- *Name of the applicant, including address and phone number.*
- *Street address and phone number of the facility for which a permit is requested.*
- *A list of the types and sources of waste to be brought to the facility (e.g. residential waste, commercial waste, liquid waste, solid waste, and/or industrial waste) including a brief description of the composition of each waste stream.*
- *The average and maximum daily quantities of each type of material anticipated to be brought to the facility during the term of the permit.*
- *The estimated daily volume of site generated truck traffic including the numbers of inbound and outbound trucks by vehicle type (e.g. packer truck, transfer trailer, tanker truck, roll-off, etc.) and the anticipated peak hour site traffic.*
- *The total number of full-time and part-time employees at the facility.*
- *The current zoning district of the facility.*
- *A brief description of the operations at the facility.*
- *The facility operating hours*.

Facility Owner, Address, and Telephone
Green Era 83rd Street, LLC
218 North Jefferson Street, Suite 300
Chicago, Illinois 60661-1307
Telephone: (708) 792-0649

Facility Operator, Address, and Telephone
Green Era 83rd Street, LLC
218 North Jefferson Street, Suite 300
Chicago, Illinois 60661-1307
Contact: Erika Allen, President
Telephone: (708) 792-0649

Facility Location, Address, and Telephone
Green Era Renewable Energy & Urban Farming Campus
650 West 83rd Street
Chicago, Illinois 60620-1937
Contact: Erika Allen, President
Telephone: (708) 792-0649

A narrative description of the facility with the listed required information is provided in this application as Attachment 1.

3.1.2.4. Facility Safety Overview. *A facility safety overview shall be included with a permit application. The purpose of the facility safety overview is to provide Department personnel who may inspect the facility with a basic understanding of potential hazards and safety procedures. The facility safety overview shall include the following information:*

- *A description of the personal protective equipment to be worn by non-employees to the facility.*
- *A description of the potential hazards present at the facility.*
- *A summary of facility check-in and escort procedures.*
- *A summary of facility evacuation procedures.*
- *A summary of any other applicable facility safety procedures.*

A *Health and Safety Plan* has been prepared and is included as subpart MP-11 of the MP-01: *Operations Manual* that is included as Attachment 2. Further edits to the *Health and Safety Plan* to address certain of the above-listed requirements are in the process of being completed, and an amended plan will be submitted when completed, as a replacement to the plan presently included in this application.

3.1.3. Fees. *The application for a permit shall be accompanied by the appropriate fee as required by Section 11-4-130 of the Municipal Code of Chicago.*

Per a conference call with Chicago DPH of August 5, 2021, it is understood that there is no application fee, but there is an annual operating permit fee.

3.1.4. Professional Engineer. *The application for a permit shall be prepared under the direction of a Professional Engineer and shall contain the name, address, registration number, seal, and signature of the Professional Engineer.*

This application has been prepared by Richard J. Vamos, Ph.D., P.E., and Christopher N. Cailles, P.E. Mr. Vamos' P.E. stamp is provided as the lead Professional Engineer on the permit application. Embedded within this application are several notifications whereby DAI is listing specific exclusions from the meaning and nature of this Certification.

Richard J. Vamos, Ph.D., P.E.
DAI Environmental, Inc.
27834 North Irma Lee Circle
Lake Forest, Illinois 60045
(847) 573-8900
P.E. 062-049136

Christopher N. Cailles, P.E.
DAI Environmental, Inc.
27834 North Irma Lee Circle
Lake Forest, Illinois 60045
(847) 573-8900
P.E. 062-058280

3.1.5. Demonstration of Financial Security. *The application for a permit shall be accompanied by a demonstration of financial security in the amount required in Section 11-4-370 of the Municipal Code and shall be provided in a form acceptable to the City Comptroller and the Commissioner and as may be defined by rule and regulation.*

Subsequent to submission of this application, and based on future discussions between the Applicant and the City of Chicago, a determination of the amount and form of the required financial security will be made and the necessary security will be obtained and documented.

Note that DAI's P.E. Certification of this Application does not include a Certification of conformance with the requirements specified in 3.1.5.

8.0 Liquid Waste Handling Facility Permit Requirements.

A complete, detailed permit application, containing at a minimum the information required in Sections 8.1 through 8.7, shall be required…

The below and attached information provides the information as required by Sections 8.1-8.7.

8.1. Owner's Authorization. *[Section 11-4-1520(A)(1)] The application for a permit shall include a notarized letter signed by the property owner that authorizes use of the property for a liquid waste handling facility. This letter is required even if the applicant is the owner of the property.*

The 650 West 83rd Street, Chicago, Illinois property is owned by Green Era Educational NFP. The facility and associated equipment will be owned/operated by Green Era 83rd Street, LLC. An authorization letter from the property owner is provided as Attachment 3 to this permit application.

8.2. Property Taxes. *[Section 11-4-1520(A)(2)] The application for permit shall include evidence of payment of real estate property taxes by providing copies of the most recent true bill and check; or by providing a copy of the recent tax bill that has been stamped paid by the Cook County Assessor's office. The PIN numbers for all areas of the facility shall also be provided.*

The facility is being developed on what was a vacant brownfield site in the Auburn Gresham neighborhood of Chicago. The facility was transferred from the City of Chicago to the current owner, Green Era Educational NFP. As such, the three (3) parcels that collectively make up the property addressed as 650 West 83rd Street are tax exempt. Therefore, no documentation of tax bill payments can be provided. Documentation of that tax exempt status for the three (3) below parcel index numbers is provided in Attachment 4.

20-33-119-024-0000 (listed address of 8158 South Wallace Street)
20-33-124-001-0000 (listed address of 650 West 83rd Street)
20-33-124-002-0000 (listed address of 8234 South Wallace Street)

8.3. Variance in the Nature of a Special Use. *[Section 11-4-1520(A)(3)] For new or expanding facilities the application for a permit shall contain all reports and information necessary to obtain a Variance in the Nature of a Special Use (Special Use Variance) from the Zoning Board of Appeals (ZBA). If the liquid waste handling facility has an existing Special Use Variance, the application shall contain copies of the variance issued by the ZBA and a demonstration that the liquid waste handling facility is in compliance with the Special Use Variance and any conditions attached to the variance.*

A copy of the final resolution on zoning, Planned Development Number 1443 dated Apri1 10, 2019, is included in Attachment 5.

8.4. Design Report. *The application for permit shall contain a design report for the liquid waste handling facility that sh1all include the following components, in this order:*

8.4.1. Plot Plan. [Section 11-4-1520(A)(4)]. The plot plan drawing(s) shall include the following components, at a minimum:

8.4.1.1. The liquid waste handling facility site boundaries and the location of all facility buildings, access roads, parking areas, and any ancillary structures or features.

8.4.1.2. Topographic contours, at minimum two-foot contour intervals, of the liquid waste handling site.

Refer to DAI Environmental, Inc. (DAI) figures in Attachment 6. Figure 3 is a Site Plan providing the facility boundaries, other major features (e.g., buildings and driveway/parking), and elevation contours. Additionally, full scale drawings with pertinent civil/architectural information are submitted in Attachment 7. Drawing C3.0 in Attachment 7, completed by Terra Engineering Ltd., and MKB Architects also depicts the information shown in Figure 1, but in a larger format.

8.4.1.3. The extent and composition of the buffer zone required by the Chicago Zoning Ordinance.

General conformance with Zoning was addressed through the Planned Development process and approvals (see Attachment 5). Figure 3 in Attachment 6 provides the measured distance from the facility boundary, nearest building, and nearest storage tank to the residential boundary to the west. Also shown are distances from the facility boundary to the church and Mahalia Jackson Park to the south and the two (2) manufacturing zoned properties to the east (beyond South Wallace Street). Figure 2 is an aerial view of the facility and surrounding area; Figure 2A provides an area zoning map. Finally, the Planned Development included in Attachment 5 demonstrates the City of Chicago approval for the development of the facility.

8.4.1.4. Any characteristic or feature that has a location standard established in Section 9.0 of these regulations or any other applicable standards. The plans shall identify the characteristic or feature and indicate the setback distance from the liquid waste handling facility boundary.

Refer to the responses to the Section 9.0 requirements later in this Application.

8.4.2. USGS Site Location Map. [Section 11-4-1520(A)(30)]

8.4.3. Aerial Photograph Drawing(s). [Section 11-4-1520(A)(30)].

8.4.4. General layout of the Facility. [Section 11-4-1520(A)(5)]

See Figure 1 in Attachment 6 for a topographic map/Site Location Map, with the facility boundary and showing all area within (and beyond) 1-mile from the facility. Figure 1A is a topographic detail of the immediate area surrounding the facility. Figure 2 includes an aerial view of the facility and surrounding area. Figure 3 (Site Plan) provides the layout of the facility and locations of major features. Figure 3A (Site Detail) provides the locations of process equipment, connective piping, and other pertinent information. Additionally, full scale drawings with pertinent civil/architectural information are submitted in Attachment 7.

8.4.5. Survey. *[Section 11-4-1520(A)(6)] The design report shall contain a Legal Plat of Survey, prepared by a Professional Surveyor, that depicts the liquid waste handling site boundaries.*

The Plat of Survey completed by Terra Engineering Ltd. Of Chicago, Illinois and stamped by Thomas E. Baumgartner, P.S. is included in Attachment 8.

8.4.6. Legal Description. *[Section 11-4-1520(A)(7)] The design report shall contain legal descriptions, prepared by a Professional Surveyor, that describe the liquid waste handling site boundaries and are identical to those provided with the financial security required by Section 11-4-370 of the Chicago Municipal Code.*

The Plat of Survey provided in Attachment 8 includes the below property legal description:

The South 264 feet of Lot A as measured on the East line of said Lot A and also Lot B of Sutherland's Subdivision of Lot 4 in Assessor's Division of the West Half of Section 33 and that part of the Southeast Quarter of Section 32 lying East of the Chicago, Rock Island and Pacific Railroad, all in Township 38 North, Range 14 East of the Third Principal Meridian, in Cook County, Illinois;

And Also

Lot 1 in Birkhoff's Addition to Auburn Park, being a subdivision of part of the Northwest Quarter and part of the Southwest Quarter of Section 33, Township 38 North, Range 14 East of the Third Principal Meridian, in Cook County, Illinois.

Said parcels containing 8.905 (acres (387,902 sq. ft.), more or less.

8.4.7. Utilities. *[Section 11-4-1520(A)(8)] For new and expanding facilities, the design report shall demonstrate that adequate utility capacity is readily available for the operations of the liquid waste handling facility. Utilities may include, but are not limited to: electricity, potable water, process water, telephone, and natural gas. The information in the design report regarding utilities shall include:*

> *8.4.7.1. A plan scaled drawing showing the location of all utilities within and adjacent to the liquid waste handling facility.*

The locations of utilities on and adjacent to the facility are depicted on Figure 3 (Attachment 6) and drawings C4.0 (original site utility plan) and C1.0 (updated site utility plan) included in Attachment 7. Other full-scale drawings provided in Attachment 7 provide details with utility layouts on-site.

> *8.4.7.2. Calculations demonstrating what the peak utility demands are for proper operation of the liquid waste handling facility. This shall include but is not limited to peak water, sewage and gas and/or electrical demands.*

Various documents provided in Attachment 9 are responsive to this requirement. Drawing 0001-009 in Attachment 9 provides water usage calculations. The anticipated average daily discharge to

the MWRD combined sewer system is 60,385-gallons (385-gallons domestic wastewater and 60,000-gallons batch discharge at 85-gpm). If the Chicago DPH requires further information regarding peak utility demand calculation for natural gas and electric, they will be provided later as an Amendment to this Application.

Note that DAI's P.E. Certification of this Application does not include a Certification of conformance with the requirements specified in 8.4.7.2.

> *8.4.7.3. A demonstration that sufficient utility capacity is available to the liquid waste handling facility to satisfy the demands calculated in 8.4.7.2. Such documentation may be in the form of an approval letter or permit from the utility provider.*

Various documents provided in Attachment 9 are responsive to this requirement. The formerly vacant property is undergoing redevelopment and has been built with all necessary utilities. The facility is supplied potable water by the City of Chicago Department of Water Management (account numbers 1347789-699385 and 1347789-699386), natural gas by Peoples Gas (account number 0622988191-00001), telecommunications by Comcast Business (account number 8771 30 0321 2632898), and electricity by ComEd (account number 8944108032). The establishment of the existing utility accounts generally demonstrates the access and sufficiency of the utility connections. Sanitary and facility process wastewater will be discharged to the MWRD in compliance with a Discharge Authorization (request submitted and pending approval). Copies of utility bills are provided in Attachment 9. If the Chicago DPH requires further demonstration in regards to sufficient utility capacity, the Applicant can provide this later as an Amendment to this Application.

Note that DAI's P.E. Certification of this Application does not include a Certification of conformance with the requirements specified in 8.4.7.3.

8.4.8. Water Sources. *[Section 11-4-1520(A)(11)] The design report shall demonstrate that sufficient quantities of water or other appropriate materials for employee consumption, fire protection, dust control, and cleaning are available. For this demonstration, the design report shall include:*

> *8.4.8.1. The locations of each source of water and/or other material.*
> *8.4.8.2. The total amount of water and/or other materials available from each source.*
> *8.4.8.3. The rate at which water and/or other materials can be obtained from each source.*
> *8.4.8.4. A listing of equipment and their specifications that are used to pump, distribute and/or convey water and/or other materials.*

Domestic water will be obtained from the City of Chicago (account numbers 1347789-699385 and 1347789-699386) via tap into the water main located below West 83rd Street. A single 8-in service line runs underground from the water main to the aboveground valve box located near the southwest corner of the facility. The underground piping transitions from below to aboveground inside the valve box, splitting into two (2) lines, a 6-in metered domestic service feed and an 8-in fire water feed. Both feeds transition back underground after the meters and inside the valve box, run along the western edge of the 35,000-ft^2 processing building, entering through the approximate

center of the west wall. Figure 3 in Attachment 6 shows the layout of the potable water utility, on-site service lines, and valve box.

The total amount of water available for use is basically not limited, as there is ample supply of potable water from the City of Chicago. Two (2) Grundfos® pumps (both CRE32-2-1A-G-A-E-HQQE-LCB) are used for the distribution of domestic use water within the facility at a rate of 159-GPM each. The fire water pump (Peerless 92562577) distributes water at 750-GPM and 100-psi. Another booster pump (Goulds 10-SH-2-L-5-7-B-0) is used within the dewatering area when potable water is used for belt press cleaning. Other pumps used at the facility are part of the anaerobic digestion process.

8.4.9. Site Security. *[Section 11-4-1520(A)(13)] The design report shall demonstrate that the liquid waste handling facility is secure from unauthorized access at all times. This demonstration shall include…*

The facility is being built in the Auburn Gresham neighborhood of Chicago. The area is a mixture of residential, commercial, and industrial properties. Typical operations (i.e., when food waste is imported and preliminarily processed) will be from 7:00-17:00, Monday-Saturday. It is possible the facility may periodically operate on Sundays. However, with anaerobic digestion operations occurring in the digester tank constantly, the facility will be continuously monitored, (24-hrs/day, 7-days/wk). Additionally, the facility is surrounded by fencing on three (3) sides, with the western property boundary being the concrete retaining wall of the adjacent railroad tracks. Adequate lighting is being installed to discourage and easily identify vandalism or other security concerns. Identification signage will be installed at both entrance/exit drives, the eastern off South Wallace Street and the southern off West 83rd Street. Figures 3-3A in Attachment 6 provide the facility plan and detail showing, fencing, lighting, and signage.

8.4.10. Back-up Capacity. *[Section 11-4-1520(A)(14)] The design report shall demonstrate that the liquid waste handling facility has sufficient back-up capacity for the removal, storage, treatment or containerization of all wastes in the event of an equipment failure or emergency situation. This demonstration shall include, but not be limited to:*

> *8.4.10.1. Details and calculations demonstrating the back-up capacity of the liquid waste handling facility. Specifically list all redundancies or emergency back-up capacity built into the system equipment and staffing.*
>
> *8.4.10.2. A plan for managing the flow of waste and other materials processed at the liquid waste handling facility during equipment failure or emergency situations.*

Section 3.2 of the MP-06: *Emergency Response Plan*, a subpart of MP-01: *Operations Manual* included in Attachment 2, provides a discussion of the facility's back-up capacity/plans in the event of an equipment failure. In short, the facility will perform periodic inspections and maintenance to prevent equipment failures. Spare parts will be maintained on-site for use in completing timely repairs. In the event that prompt repairs are not possible, the facility will be temporarily shut down until such time as repairs can be completed. If facility is shut down, import of food wastes will be diverted to an appropriate disposal facility, with all further imports stopped. Consistent with the permit to be issued by the Bureau of Land, no materials will be allowed to be imported to the facility unless the material can be appropriately processed within a 24-hr period.

Because the facility does not have an emergency power generator, a portable generator will be brought to the facility to provide backup power, if necessary.

Note that DAI's P.E. Certification of this Application does not include a Certification of conformance with the requirements specified in 8.4.10.

8.4.11. Structures and Fixed Equipment. *[Section 11-4-1520(A)(17)] The design report shall demonstrate that all structures and fixed equipment are designed so that the liquid waste handling facility can be operated as proposed and in a safe manner. This demonstration shall include, but not be limited to:*

> *8.4.11.1. Detailed design drawings and manufacturers specification sheets for all structures and fixed equipment including tanks, mixers, filters, treatment equipment, pits, pumps, and piping.*

See Attachment 10 for a general facility mass-balance (food waste received, biogas generated, dewatered digestate cake generated, wastewater generated, etc.), equipment specifications for liquid storage tanks, the belt press to be used for dewatering, the separation mill, the flare, and the thermal oxidizer. Piping specifications and layout are included in the "DP" drawings provided in Attachment 7. Equipment specifications for the grit hopper and live-bottom receiving bunker have not yet been finalized.

Note that DAI's P.E. Certification of this Application does not include a Certification of conformance with the requirements specified in 8.4.11.

> *8.4.11.2. Calculations of the waste handling capacity of all structures and fixed equipment.*

Dimensions and/or capacities are included on the documentation provided in Attachment 10.

> *8.4.11.3. An operating and maintenance plan for all structures and fixed equipment.*

The facility is still undergoing construction and the specification/purchase of necessary equipment is ongoing. Therefore, an Operation and Maintenance Plan (O&M Plan) for all equipment cannot be submitted at this time. Upon the final purchase of all equipment and construction of the facility. The O&M Plan will be added to the MP-01: *Operations Manual* as MP-13. A copy of the O&M Plan will be submitted to Chicago DPH upon completion, as an Amendment to this Application.

> *8.4.11.4. New facilities shall include a Construction Quality Assurance (CQA) Plan that provides testing and acceptance procedures for construction of all structures and fixed equipment.*

No formal Construction Quality Assurance Plan was developed by Green Era. However, a general plan was implemented and followed by Pepper Construction. Hydraulic testing of the two (2) field-built outdoor tanks is yet to be performed. The results of this testing will be presented to the Chicago DPH when available in a future Amendment to this Application.

Note that DAI's P.E. Certification of this Application does not include a Certification of conformance with the requirements specified in 8.4.11.4.

8.4.12. Storage Capacity. *[Section 11-4-1520(A)(10)] The design report shall demonstrate that sufficient storage capacity exists to accommodate the peak volumes of material inflow into the facility. This demonstration shall include:*

8.4.12.1. Drawings and calculations indicating the volume of storage available for waste in receiving pits or tanks.

8.4.12.2. Drawings and calculations indicating the volume of storage available for chemicals and other materials used at the facility.

8.4.12.3. Estimates of the volume of incoming waste materials during the peak inflow period of the day in gallons per hour and liters per hour.

8.4.12.4. Estimates of the amount of chemicals and materials used by the facility during an operating day.

A detailed narrative of the anaerobic digestion process and associated equipment is provided in Attachment 1. Equipment specifications and a facility mass balance are included in Attachment 10.

Two (2) forms of food waste will be imported to the facility, solid food waste and pumpable (i.e. liquid) food waste. Solid food waste will be tipped from the main floor into the 80-yds^3 live-bottom receiving located in the lower level of the Processing Building. During periods of peak input where solid food waste could exceed 80-yd^3 (2-truckloads), space will be provided on the main floor of the Processing Building. The facility will receive approximate eight (8) to 16-loads/day. Pumpable food wastes will be unloaded into two (2) 30,000-gallon holding tanks located in the lower level of the Processing Building. Five (5) to 8-loads/day of pumpable food waste will be received via tanker trucks (up to approximately 5,500-gallons capacity). Even if all tankers are received at the exact same time, the two (2) 30,000-gallon holding tanks have sufficient capacity to store 100% of the pumpable food waste received. All food waste will be normally processed the same day it is received. The other equipment in the anaerobic digestion process "downstream" of wastes receiving have been sized to ensure daily processing. Waste will not be accepted if insufficient capacity is available to process the waste in a timely manner.

The only chemical usage on-site is the addition of polymer to improve flocculation in advance of dewatering by a 2-stage belt press. The polymer will be received in 275-gallon totes and then diluted with water in a 2,000-gallon holding tank, prior to use. Polymer use is estimated as 75-gallons/day.

8.4.13. Water Drainage. *[Section 11-4-1520(A)(20)] The design report shall demonstrate that adequate systems exist to handle stormwater and wastewater flows from the liquid waste handling facility. This demonstration shall include:*

8.4.13.1. Drawings, specifications, and design calculations to demonstrate effective control of run-on and run-off from the liquid waste handling facility.

8.4.13.2. Copies of the facility's NPDES and MWRD discharge permits or anticipated submittal date, if applicable and/or any other permit issued by the IEPA Bureau of Water.

8.4.13.3. Copies of the facilities MWRDGC discharge authorization request, discharge authorization, or anticipated submittal date, if applicable

8.4.13.4. Documentation that any receiving sewer system has sufficient capacity to handle the quantity of stormwater and wastewater generated by the liquid waste handling facility. Such documentation may be in the form of an approval letter or permit from the utility provider.

8.4.13.5. Drawings, specifications, and design calculations to demonstrate effective handling, storage, treatment, and/or disposal of wastewater generated by the liquid waste handling facility.

A stormwater retention pond with a storage capacity of 88,182-ft^3 (659,647-gallons) has been constructed at the Site. The retention pond includes an overflow that drains into the off-site combined sewers locate below West 83rd Street. A copy of the City of Chicago Department of Buildings approval regarding stormwater management and the supporting calculations are included in Attachment 11.

A Discharge Authorization Request dated November 2, 2021, has been submitted seeking approval of wastewater discharge to the MWRD (see Attachment 12), and subsequently, additional supporting information has been submitted to the MWRD. The facility will not be discharging directly to Waters of the State; therefore, no National Pollutant Discharge Elimination System (NPDES) permit application is required. No form of pretreatment is required prior to discharge of wastewater to the MWRD; therefore, no wastewater treatment system permit is required from Illinois EPA Bureau of Water Permit Section.

8.4.14. Traffic. *[Sections 11-4-1520(A)(21)] The design report shall demonstrate that traffic generated for the liquid waste handling facility will not significantly affect existing traffic flows, and that the points of ingress and egress are designed according to Illinois Department of Transportation (IDOT) standards. For new, expanding, and existing facilities, this demonstration shall include, but not be limited to:*

8.4.14.1. Calculations of the average and maximum number of vehicles generated by the liquid waste handling facility as well as hourly breakdown of vehicle traffic.

8.4.14.2. Diagrams of the points of ingress and egress depicting the layout of the ingress/egress points, sight distance, and improvements necessary to minimize accidents at the ingress/egress points.

8.4.14.3. A listing of roads and highways designated for use by traffic generated by the liquid waste handling facility.

8.4.14.4. A stacking plan showing the number of waste handling vehicles and the location of these vehicles during the maximum peak service hour.

8.4.14.5. A demonstration that traffic generated by the liquid waste handling facility will not interfere with the flow of traffic or exceed the intended level of service of any public street or right-of-way

For new and expanding facilities, this demonstration shall include the components listed in Sections 8.4.14.1. through 8.4.14.5., in addition to:

8.4.14.6. Traffic counts taken in hourly intervals at all ingress/egress points during the anticipated operating hours of the liquid waste handling facility. The entire operating period shall be represented in this traffic count study and shall identify the peak hours of

traffic volume occurring in the morning and afternoon. The traffic counts shall include classification of vehicles.

8.4.14.7. A description of the measures taken to reduce the impact of the liquid waste handling facility generated traffic on the existing traffic flows.

Truck traffic at the facility is anticipated to include eight (8) to 16-loads/day of solid food waste, five (5) to 8-loads/day of pumpable food waste, two (2) loads/day for garbage compactor delivery/removal, and two (2) loads/day of finished product compost off-site shipment. Approximately two (2) loads of palletized, packaged food is also anticipated. All truck traffic will use the eastern entrance/exit located on South Wallace Street. The southern driveway that leads to West 83rd Street is for personal vehicles of facility personnel and public visitors. Figure 3A in Attachment 6 provides the traffic flow directions. DAI acknowledges that the specifics provided above do not demonstrate conformance with the listed requirements, and as such, please note that conformance with the requirements on Traffic, specified under 8.4.14, is an item that is not included as part of DAI's P.E. Certification of this application. However, the traffic impacts to the area by operations of the Green Era facility are expected to be minimal, and as such, strict conformance with the traffic evaluation is not considered crucial.

8.4.15. Parking. *[Section 11-4-1520(A)(22)] The design report shall demonstrate that sufficient parking exists at the liquid waste handling facility. This demonstration shall include:*

8.4.15.1. A listing of the number of employees at the liquid waste handling facility and the corresponding number of parking spaces.

8.4.15.2. A layout of all parking areas including short-term truck parking and truck queuing areas. This layout may be shown on the general layout required in Section 8.4.4.

Parking areas are located to the southeast (3 spaces), south (7 spaces), and southwest (9 spaces) of the Processing Building. Between six (6) and eight (8) personnel will oversee facility operations across three (3) shifts/day. Parking locations are depicted on Figure 3A in Attachment 6. As applicable, trucks awaiting access to unload at the facility will stage on driveways on-site surrounding the Processing Building.

8.4.16. Employee Facilities. *[Section 11-4-1520(A)(23)] The design report shall contain a description of the employee facilities available at the liquid waste handling facility. At a minimum, these employee facilities shall include washrooms, toilets, and potable water.*

The Processing Building includes an office and bathroom, sufficient to support the six (6) and eight (8) personnel will oversee facility operations across three (3) shifts/day. Potable water is obtained from the City of Chicago municipal supply. In addition to the bathroom sink, a drinking fountain is located outside the office. Figure 3 in Attachment 6 depicts the location of the office and bathroom inside the Processing Building.

8.4.17. Screening. *[Section 11-4-1520(A)(25)] The design report shall demonstrate that the screening or fencing of the liquid waste handling facility will adequately control noise, dust, blowing litter, and will prevent unauthorized access. This demonstration shall include:*

8.4.17.1 A description of the screening or fencing for the liquid waste handling facility site.

8.4.17.2. A detailed drawing of the construction of the screening or fencing and the placement around the liquid waste handling facility. This drawing may be included in the general layout required in Section 8.4.4.

8.4.17.3. A demonstration that the screening or fencing will control noise, dust, blowing litter, and unauthorized access.

The facility is surrounded by fencing on three (3) sides, with the western property boundary being the concrete retaining wall of the adjacent railroad tracks. Figure 3 in Attachment 6 depicts the facility fencing. A *Fugitive Dust Operating Program* has been prepared and is included as subpart MP-12 of the MP-01: *Operations Manual*, included in Attachment 2. Most noise control is accomplished by all operations being performed inside. Trash compactors will be stored inside the building, and the lid of the municipal waste dumpster will be kept closed to prevent blowing litter. The two (2) entrances to the facility are gated, which will be closed during off-hours. Additionally, personnel will be present at the facility 24-hrs/day, 7-days/wk. The gates and on-site personnel will aid in access control.

8.4.18. Buffer Zone. *[Section 11-4-1520(A)(28)] The design report shall describe the buffer zone surrounding the liquid waste handling facility and shall demonstrate that it meets the description of a buffer zone required for a liquid waste handling facility by the Chicago Zoning Ordinance.*

The facility is bounded on three (3) sides by transportation routes, specifically South Wallace Street to the east, West 83rd Street to the south, and elevated METRA railroad tracks to the west. The only non-transportation property to the north is zoned heavy industrial adjacent. The Planned Development approval included in Attachment 5 demonstrates the City of Chicago approval for the development of the facility in compliance with the Chicago Zoning Ordinance. Figure 2 of Attachment 6 shows an aerial view of the facility and surrounding area; Figure 2A provides an area zoning map.

8.4.19. Environmental Assessment. *[Section 11-4-1520(A)(29)] For new or expanding facilities, the design report shall include a complete copy of the Environmental Assessment prepared pursuant to the Chicago Zoning Ordinance. The application shall also include responses and/or additional information related to any recommendations included in the Environmental Assessment.*

Environmental assessment of the facility had been previously completed by Terracon Consultants, Inc. (Terracon) on behalf of the City of Chicago. A *Phase I Environmental Assessment* dated May 1, 2015, and a *Comprehensive Site Investigation Report, Remediation Objectives Report, and Remedial Action Plan* (CSIR/ROR/RAP) dated May 29, 2015, were submitted to the Illinois EPA Site Remediation Program (SRP), LPC 0316715228, with details and results of the environmental assessment activities. Illinois EPA issued a letter of approval dated August 20, 2015. Copies of the reports and Illinois EPA approval letter are provided in Attachment 13.

Subsequently, as part of the acquisition and redevelopment of the property by Green Era Educational NFP, Terracon was engaged to pursue a No Further Remediation Letter from the Illinois EPA SRP. The most recent reports submitted to the Illinois EPA SRP on behalf of Green Era Educational NFP were the *Remedial Action Plan Addendum* dated January 21, 2020, and the *Supplemental Remedial Action Plan Information* dated April 5, 2021. Illinois EPA approved the reports in letters dated March 2, 2020, and May 24, 2021. Submission of a Remedial Action Completion Report seeking issuance of the NFR Letter is pending the final construction of the facility, including placement of all required engineered barriers.

8.4.20. Monitoring Wells. *[Section 11-4-1520(8)(1)] The design report shall contain the locations of monitoring wells for the facility and specific details concerning the monitoring well construction and locations. This shall include, but not be limited to:*

Figure 3B in the Terracon CSIR/ROR/RAP included in Attachment 13 provides the locations of the historically existing monitoring wells. Excluding the temporary well, the three (3) 2-in diameter monitoring wells were completed to a depth of 16-ft below ground surface (bgs) and included a 10-ft screen (per Section 3.1.2 of the CSIR/ROR/RAP). All of these wells have been destroyed as part of the property redevelopment. Note that while part 11.9 of the Chicago Liquid Waste Handling Facility Permit Application Requirements states that a minimum of three (3) monitoring wells are required to be installed/monitored, we argue that these monitoring requirements should be waived based on the nature of the material being accepted and processed at the facility, and the fact that the City of Chicago prohibits the use of groundwater as a potable water supply. Conformance with the requirement for monitoring wells is an item that is not included as part of the P.E. Certification of this application.

8.4.21. Hydrogeological Investigation. *[Section 11-4-1520(8)(3)] For new and expanding facilities, the design report shall contain the results of a comprehensive hydrogeologic investigation of the site and the surrounding area…*

Soil sampling and hydrogeological evaluation of the property was completed as part of Terracon environmental investigations and pre-construction geotechnical evaluation.

Based upon review of Section 3.1.2 of the CSIR/ROR/RAP (Attachment 13), the observed depth to water measurements were 6.39-ft to 7.21-ft bgs, the hydraulic gradient was 0.001 with a southeasterly groundwater flow direction, and the hydraulic conductivity was 2.7 x 10^{-3}-cm/s. Information in the geotechnical report completed by Terracon in October 2018 (see Attachment 14) indicates the subsurface stratigraphy consisting of fill followed by silty sand, consistent with the calculated hydraulic conductivity. The presence of shallow groundwater during drilling was also consistent with depth to groundwater as determined during environmental investigations.

Note that the conformance with all of the requirements for Hydrogeological Investigations under 8.4.21 is an item that is an exclusion to the P.E. Certification of this application. However, given that the facility is managing non-toxic waste, and with the City of Chicago prohibiting the use of groundwater as a source of potable water by ordinance, it is argued that strict adherence to the Application requirements concerning Hydrogeologic Investigations is not necessary.

8.4.22. Secondary Containment. *[Section 11-4-1520(B)(5)] The design report shall contain sufficient documentation that secondary containment exists for all tanks, drum storage areas, tanker truck loading/unloading areas, liquid transfer points, pits, lagoons, impoundments, and similar liquid waste handling devices or storage systems or devices, and as necessary and appropriate, pumps and piping systems. This demonstration shall include, but not be limited to:*

8.4.22.1. Drawings detailing the design of secondary containment features for the facility. The secondary containment features may be shown on the drawings specified in Section 8.4.4. of these regulations in lieu of separate drawings.

8.4.22.2. Detailed calculations verifying that the capacity of the secondary containment features meets the standards specified in Section 11.0 of these regulations. (NB: This standard in Section 11.0 is: "Secondary Containment volume shall be equivalent to the volume of the largest tank plus precipitation from a 25-year, 24-hour rainfall event. The secondary containment installations shall allow for the complete removal of any spilled waste or other materials").

8.4.22.3. A description of any coating or similar sealant systems applied to the secondary containment. This description should include a demonstration that such coating or sealant systems are chemically compatible with any waste or other liquid material that may contact them.

The current working version of the Spill Prevention Control and Countermeasures (SPCC) Plan is included in Attachment 15. The SPCC Plan provides details on the types and capacities of the secondary containment available at the facility, including the building structure for the indoor tanks/drums/totes and the stormwater detention basin as partial containment of the outdoor tanks. Most storage tanks at the facility are located inside of the Processing Building, which serves as the form of secondary containment. The building has concrete walls and floor without any open floor drains that connect to the sewer system. These tanks are not exposed to precipitation. The partial containment on-site and a commitment to promptly respond to all spills are proposed as secondary containment equivalency for the two (2) outdoor tanks. Figures included in this application, as well as in the SPCC Plan, show the building and detention pond. Neither the building nor the detention pond contain coatings or sealants; none are required. The only coatings in place are not associated with secondary containment but with storage tanks (the subgrade concrete tanks in the building and the concrete floors of the outdoor tanks). Note that the SPCC Plan is not yet certified by a professional engineer, as the facility is not yet fully constructed or in operation. Further, an engineer's certification will only be made if it can be determined that the facility is in conformance with applicable requirements and/or may include some exclusions to the certification for non-conforming items (that presumably will be accepted by the regulatory agency of interest).

In earlier conversations with the Chicago DPH, DAI explained that the facility design does not include secondary containment around the 320,000-gallon biomass equalization tank or the 1,680,000-gallon digester tank. In those conversations, the Chicago DPH explained that the applicant would therefore need to provide a spill evaluation and an estimate for responding to a catastrophic spill. A Spill Evaluation is included as Appendix D of the SPCC plan (Attachment 15), but is additionally outlined below. Also presented below is an estimate of costs to address a catastrophic spill. The partial containment on-site and a commitment to promptly respond to all spills, are proposed as secondary containment equivalency. An exemption from the

requirements for sized secondary containment of the two (2) outdoor tanks is requested based upon the limited threat to public health and/or the environment in the event of a release.

Note that DAI's P.E. Certification of this Application does not include a Certification of conformance with the requirements specified in 8.4.22.

Catastrophic Spill Scenario Assumptions and Basis

- Given it extremely unlikely that both the largest and the second largest ASTs would suffer a catastrophic release at the same time, the estimate was developed assuming only the largest AST would suffer a catastrophic release (i.e., a catastrophic release from the 1,680,000-gallon digester AST).
- The on-site stormwater detention pond has a volumetric storage capacity of 659,647-gallons. In the event of a catastrophic release from the digester, a significant portion of the released liquid would flow into on-site stormwater catch basins (which all connect to the detention pond, and therefore will be collected in the detention pond), or will flow overland southeast towards and directly into the detention pond. For estimation purposes, we assume 45% of the total released volume (i.e., 756,000-gallons) would be captured in the detention pond. Given the detention pond only has a storage capacity of 659,647-gallons, the detention pond will overflow, and 96,353-gallons would not be contained, but instead would likely flow south onto W. 83rd Street, and then possibly further south onto Mahalia Jackson Park.
- The 659,647-gallons of digestate in the detention pond would be managed by an emergency response action whereby vacuum tanker trucks would pump out the liquid and dispose of it off-site.
- Of the 96,353-gallons that overflows the detention pond and flows off-site to the south, it is assumed that all but 15% of it either will flow into stormwater catch basins, or infiltrate into the subsurface, leaving 14,453-gallons to be recovered by an emergency response action.
- Based on the surrounding topography and the presence of the railroad embankment along the western boundary of the Site, the remaining spilled digestate will flow off-site either to the north or to the east. For estimation purposes, and with the digester AST located near the northwest corner of the Site, we assume that 40% of the spilled digestate (672,000-gallons) will flow onto the north adjacent property, and 15% (252,000-gallons) will flow off-site to the east.
- The flow to the north (672,000-gallons, which equals 89,840-ft^3) is assumed to spread across the approximately 300,000-ft^2 of land area north (to W. 81st Street) not covered by building, which represents (at even spreading) a layer of liquid approximately 3.5-inches if it all pooled. We assume all but 15% of that quantity will infiltrate to the subsurface or will flow further north onto W. 81st Street, and then be captured in stormwater catch basins. The other 15%, or 100,800-gallons, is presumed to accumulate in lower lying areas on the parcel north of the Site, and be amenable to recovery by emergency response contractors.
- The remaining flow off-site to the east (252,000-gallons) will be generally limited in terms of flow extent by another railroad embankment present at the eastern boundary of the adjoining land to the east. In any event, it is again assumed that 15% of this quantity (37,800-gallons) will accumulate in lower lying areas and be amenable to recovery by

emergency response contractor, while the remaining will either infiltrate, or flow into stormwater catch basins.

- Digestate that flows into the off-site storm sewers are presumed to simply flow by gravity to the MWRD Stickney plant, and not be amenable to any sort of "metering" or "recovering."
- No response action is proposed to address the liquids that infiltrate into the subsurface, as the digestate is non-toxic and would simply impart some additional nutrient value to the surrounding soils. However, some minimal allowance is assumed for off-site disposal of some solid wastes that might be generated and requiring off-site disposal as a result of the spill.

So, in summary, the response actions to a catastrophic spill will be to engage emergency response contractors to recovery the digestate and dispose of it off-site. The quantities would be as follows:

Location	Quantity (gallons)
On-Site Detention Pond	659,647
North Adjoining Property	100,800
East Adjoining Property	37,800
Land South of W. 83rd Street	14,453

Costs to Address Liquids Collected and Contained in the On-Site Detention Pond

DAI obtained some unit cost quotes from an emergency response contractor (HazChem) to use in developing a cost estimate to recover the 659,647-gallons of digestate from the detention pond, and dispose of it off-site. The cost estimate was developed based on the following steps and assumptions:

- Six (6) 5,500-gallon vacuum tanker trucks would be used to recover the liquid, and each would recovery and deliver to an off-site receiving facility a total of 2-loads per day (over an 8-hr period). With six (6) trucks, this equates to a daily total recovery rate of 66,000-gallons/day. As such, 10-days would be required to recover the approximately 660,000-gallons contained in the detention pond. For purposes of cost estimation, because the liquid will essentially be a high-strength organic wastewater, it is assumed the MWRD will accept the liquid for direct discharge at the MWRD Calumet Wastewater Treatment Plant as a high strength liquid waste at the cost of $0.03/gallon (per ordinance).
- The hourly rate for the vacuum trucks is assumed to be $159/hr (per quote from Hazchem). Therefore, the daily (8-hrs/day) charges for the six (6) tanker trucks will be $7,632, (and for 10-days, would be $76,320).
- Additional costs would include:
    - Manpower: field laborers (2 x 8-hrs x $89/hr) plus one emergency response manager (1 x 8-hrs x $119/hr) = $2,376/day x 10-days = $23,760.
    - Miscellaneous additional equipment and vehicles = $300/day x 10-days = $3,000.
- Consultant oversight and documentation ($1,500/day x 10-days + $5,000 in oversight, supervision, and reporting).

- See below for total estimated costs to pump out the accumulated liquid from the detention pond and to transport and discharge it at the MWRD wastewater treatment plant.

Costs to Recover 659,647-gallons of Liquid from Detention Pond and Deliver/Discharge to MWRD

Item	Cost
Discharge Fee to MWRD	$19,789
Vacuum Truck Fees	$76,320
On-Site Manpower and Equipment/Vehicles	$26,760
Consultant Oversight and Reporting	$20,000
Total Estimated Costs	**$142,869**

Costs to Address Off-Site Recoverable Liquids

DAI obtained some representative unit rates for emergency response personnel, equipment, and materials, from an emergency response contractor (Hazchem) and used the rates to develop an estimate for the costs to recover the 153,053-gallons of estimated recoverable liquids that would flow to off-the site locations as a result of the spill, and be amenable to recovery as a liquid. The following itemizes the various steps and estimated costs:

- Emergency response contractor fees are estimated at $50,000/day (approximately 7-man crew, 24-hrs/day, 7-days/week); and include:
    - Field Laborers (5), Emergency Response Manager (1), bobcat operator (1), job trucks, PPE equipment, and pumps
    - Five (5) 3,000-gallon vac trucks will be used to recover pooled and recoverable liquids and discharge to on-site frac tanks, staged at five (5) locations; two (2) on the north adjoining property, two on the east adjoining property, and one in the park south of the Site.
    - Lighting for nighttime work.
- It is assumed five (5) frac tanks will be staged and used to temporarily store recovered liquids (with a delivery and pickup charge of $1,000.00/tank and rental charge of $31/day/tank).
- It is assumed 15,000-gallons of liquids can be recovered per day, in total. As such, the 153,053-gallons of liquids to be recovered from off-site locations will be recovered in approximately 11-days (including some time for setup/breakdown).
- The liquids will be transported from the Site in 5,500-gallon vac trucks, and it is assumed that 2-trucks per day (8-hr time period) will be able to deliver the 15,000-gallons/day to the MWRD Plant. At $159/hr, the vac truck removal/transportation costs will be $2,544/day.
- The liquid will be discharged at the MWRD Plant at $0.03/gallon.
- Additional costs include costs for heavy equipment and operator (CAT 330 Excavator) to clear debris and materials to allow the emergency response work to proceed, to perform any trenching or excavation work to support the liquids recovery, and to load any solid waste into trucks if off-site disposal of any solid waste materials is necessary ($1,200 mobilization plus $2,300/day x 11-days).

- A line item of $10,000 for general solid waste (non-hazardous) disposal to address some moderate quantities of solid waste materials that might need to be disposed off-site. At an assumed unit cost for transportation and disposal of $62/ton, this allowance equates to approximately 160-tons (8-loads @ 20-tons/load).
- Consultant oversight and documentation ($1,500/day x 11-days for on-site oversight + $10,000 in senior project management oversight, supervision, and reporting).

Costs to Recover 153,000-gallons of Liquid from Off-Site Locations and Deliver/Discharge to MWRD

Item	Cost
Discharge Fee to MWRD	$4,592
Emergency Response Contractor (11-days + 2-days for setup/demobilization)	$650,000
Frac Tanks (11-days rental + 2-days setup/demobilization)	$7,015
Vacuum Truck Fees (11-days)	$27,984
Heavy Equipment Rental and Operator	$26,500
Solid Waste Disposal	$10,000
Consultant Oversight and Reporting	$26,600
Total Estimated Costs	**$752,691**

Based on the above, the total costs to address a catastrophic spill is estimated at emergency response costs are estimated at **$895,560**.

8.4.23. Pit Liners. *[Section 11-4-1520(8)(6)] The design report shall contain documentation to demonstrate that pit liners are designed and constructed to prevent contamination of the surrounding environment and meets the minimum standards set forth in Section 11.0 of these regulations. This demonstration shall include, but not be limited to:*

8.4.23.1. Details and specifications of the pit liner system including design drawings, construction details, quality assurance testing results, and construction as-built drawings. For existing facilities, the design report shall contain all information regarding the construction of the pit liner system. If sufficient information is not available, DOE may place additional conditions on the facility or require the closure of the pit due to uncertainty of the pit liner integrity.

8.4.23.2. A demonstration that the pit liner system is chemically compatible with any waste or other liquid material that may contact it.

8.4.23.3. Calculations of the amounts of materials required for construction of the pit liners and a demonstration that sufficient quantities are available for construction.

8.4.23.4. A comprehensive construction quality assurance plan that provides for certification of materials and construction by a third party independent professional engineer.

8.4.23.5. Copies of all pit liner acceptance reports, permits, and/or correspondence received from the IEPA.

Trench drains located throughout the Processing Building drain to concrete sumps pits (not open to the underlying soil/groundwater) located in the lower level of the building. A concrete groundwater sump is also located in the northwest corner of the lower level. These pits are not intended for liquid waste storage. A stormwater retention pond is constructed in the southeast

corner of the facility. The pond is not designed to store waste. Exposure to waste material would only occur in the event of a spill/release.

As part of the overfill control system, the two (2) large-volume ASTs outside of the Processing Building have been designed with overflow piping that connects to a 3,000-gallon underground sump pit. This pit will be typically empty and is not designed for water storage. In the event of any overflow into the sump pit, a pump will be used to transfer the material back to the liquids receiving tanks discussed in the process narrative included in Attachment 1.

As discussed in the process narrative included in Attachment 1, five (5) fully concrete sub-grade tanks (cast in place, which bulk-head to lower level) are located in the lower level of the Processing Building, two (2) for storage of liquid food waste, one (1) for storage of digestate, two (2) for storage of filtrate prior to discharge to the combined sewer system, and one (1) to be used later (but not in this current configuration of the facility) for storage of undiluted polymer. Two (2) additional concrete tanks were built as part of the building construction that are intended for future use, as needed. Though none of these tanks are a pit, the eight (8) sub-grade concrete storage tanks are lined with an epoxy coating. The interior walls and concrete floor of the two (2) outdoor tanks are also provided a coating.

Note that DAI's P.E. Certification of this Application does not extend to certifying conformance with 8.4.23.4 (*a comprehensive construction quality assurance plan that provides for certification of materials and construction*).

8.5. Operating Plan. *The application for a permit shall contain an operating plan for the liquid waste handling facility that shall include, at a minimum, the following components, in order:*

The process narrative included in Attachment 1 and the MP-01: *Operations Manual* (and associated subparts) included Attachment 2 provide much or all of the information required for an *Operating Plan.* The MP-01: *Operations Manual* and associated subparts are presently being cross-checked to the Chicago liquid waste requirements for determination of compliance and/or required updates. Amended subparts will be submitted as replacement to those presently included in this application, as applicable and necessary. But see below for responses to the individual requirements.

8.5.1. Types of Waste. [Section 11-4-1520(A)(9)]

The facility will be a food waste recycling facility developed to create commercial compost and biomethane for injection into the local natural gas utility system. The facility will process food waste from the greater Chicago metro-area and surrounding Cook County. The majority of waste processed at the facility is expected to be generated within a 30-mile radius of the facility, but may be taken from an approximate 75-mile radius (which would include other "collar" counties such as Lake, DuPage, and Will Counties).

Two (2) forms of food-based waste are to be received: solid food waste and pumpable liquid commercial food waste. Compostable landscape waste will not be accepted by this facility for digestion. The solid food waste that will be accepted by the facility includes

food waste from food processors (dairies, bakeries, potato chip plants, etc.), grocery stores, and restaurants in the Chicago metro-area. The facility will also be equipped to accept bagged kitchen waste from neighborhood curbside collection programs, as well as packaged food waste. Packaged food waste is any organic food waste that is contained within consumer packaging (e.g., beverages or soup in cans, milk or juices in plastic jugs, bottles, or cartons, and single serving condiment packs). Packaged food waste will be separated at the facility, while most accepted food will be source-separated (i.e., any food waste that has been pre-sorted from other waste by the customer or waste generator).

Pumpable commercial food waste includes whey, liquid ice cream mix, end of batch soups, and sauces and syrups. Fats, oils, and grease (FOG) collected from grease traps at restaurants and food processors will also be accepted. The facility will receive pumpable food waste in closed tankers. Included in what is proposed to be accepted by the facility are wash/rinse waters generated off-site from the rinsing (with water) of tanker trucks or railcar tankers used to transport food products. No washing/rinsing of the interiors of transport containers will occur at the facility. The facility will not accept wash waters that have been generated by the clean-out or rinsing of tanker trucks or railcar (or any other transport containers) used to transport chemicals or petroleum oils. It is further understood that such wastewaters generated by such washing/rinsing would be subject to categorical pretreatment standards of 40 CFR 422.

Additional details and limitations regarding material acceptable procedures are specified in the MP-10: *Waste Control Plan* (Attachment 16).

8.5.2. Quantity of Waste. [Section 11-4-1520(A)(10)]

The facility has been designed to receive and treat 80,000-tons per year of food waste, 50,000-tons/year of solid food waste and 30,000-tons/year (7,195,000-gallons/year) of pumpable food waste. Typically, the facility will receive eight (8) to 16-loads/day of solid food waste via compactors, roll-off boxes, and dump or walking floor trailers (averaging 12-tons/load) and five (5) to 8-loads/day of pumpable food wastes via tanker trucks (averaging 13-tons/truck). Palletized, packaged, food products will also be accepted, typically two (2) loads per week.

8.5.3. Fire Prevention. [Section 11-4-1520(A)(12)]

As a food recycling facility, all waste must be processed within 24-hrs, preventing accumulation of materials that may serve as fuel for fire. The liquid waste accepted is primarily wastewater and is not considered flammable. The biogas that will be generated during the anaerobic digestion process will be input into the natural gas utility system or burned via the on-site flare and thermal oxidizer units. All flammable materials at the facility are stored within a flammables cabinet. An 8-in fire water feed connected to the City of Chicago municipal water supply services the facility. The water piping enters the boiler room through the western building wall. The fire water pump is capable of distributing water at 750-GPM and 100-psi to the sprinkler system that is in place in across the entirety of the building roof, as well as the ceilings of the internal rooms (office,

electrical rooms, and boiler room). In the event of a fire, employees are to evacuate safely, call 911, and allow professionals to address the fire. Fire extinguishers are located throughout the building in compliance with local code for use by facility personnel in the event of "minor" fire.

8.5.4. Emergency Communications. [Section 11-4-1520(A)(15)]

The facility is to be largely automated, with a programmable logic controller (PLC) and a supervisory control and data acquisition (SCADA) monitoring sensors, alarms, etc. If a system upset is identified, the SCADA/PLC system will implement appropriate shutdowns and provide notification to the responsible party through text message or email. Cell phones will be carried by all personnel for routine and emergency communications. Depending of the type of emergency, authorities that may be contacted include the 911, the City of Chicago, MWRD, and/or the Illinois Emergency Management Agency. The Plant Manager is responsible for emergency response and notification, personnel direction, and incident command until such time as outside emergency personnel arrive on-site and relieve the Plant Manager of command.

8.5.5. First Aid Equipment. [Section 11-4-1520(A)(16)]

The facility maintains basic first aid kits. In the event of a serious injury, outside assistance will be relied upon by contacting 911. First aid kits will be maintained in the office inside of the Processing Building. All employees working on the production floor will be trained in emergency procedures, in the operation of emergency equipment (e.g., fire extinguishers, spill response kit, first aid kits), and in American Red Cross first aid and cardiopulmonary resuscitation (CPR).

8.5.6. Devices, Apparatus, and Processes. [Section 11-4-1520(A)(18)]

Solid food waste received by the facility will be unloaded/tipped into one (1) live-bottom receiving bunker. Trucks delivering solid food waste will back into the receiving bay through the roll-up overhead door, reversing to the end of the main floor inside of the Processing Building. Solid food waste is subsequently tipped from the main floor into the live-bottom receiving bunker located in the lower level of the Processing Building. A simple garden hose will be available for post-tipping exterior wash down (no internal container or truck wash down), with collected water captured by trench floor drains that connect to sump pits (collected water subsequently transferred to concrete sub-grade holding tanks). The live-bottom receiving bunker is designed to process approximately 90-yds^3 (between 2 and 3 truckloads). Tipping space will be provided on the main floor of the Processing Building to hold additional loads during busy periods if the bunker is full (i.e., greater than the 90-yd^3 capacity). Tipping on the floor will be accomplished by trucks reversing through the two (2) roll-up overhead doors top the adjacent south of the receiving bay. Packaged food products will be manually added into the bunker by facility personnel.

Pumpable food wastes will be unloaded into two (2) 30,000-gallon concrete sub-grade holding tanks (T-050A and T-050B) located in the lower level of the Processing Building.

Tanker trucks will pull onto the main floor inside the north end of the Processing Building for subsequent gravity discharge into the two (2) 30,000-gallon concrete sub-grade holding tanks. Water collected by the in-building floor drains during post-unloading wash down of the exterior of trucks/containers will be transferred into the concrete sub-grade holding tanks.

The "treatment" method utilized for the food waste recycling is anaerobic digestion. A more complete description of the anaerobic digestion process is included in the narrative provided as Attachment 1, but in simple summary, solid and liquid food waste are received by the facility and transferred into the initial processing equipment discussed above. After removing non-digestible materials from the solid food waste, liquid food waste is added to create a slurry that is then transferred to two (2) large ASTs located outside of the Processing Building where the anaerobic digestion occurs. The anaerobic digestion breaks down the complex carbon chains of the food waste into simple volatile fatty acids. The biogas generated during the digestion is removed and sent for "cleaning" so that methane may be delivered to the natural gas utility and other gaseous components can be distributed to a thermal oxidizer. The "treated" liquid (referred to as digestate) is transferred back into the Processing Building for dewatering, creating a compost "cake" (i.e., finished product) and wastewater that will be discharged to the MWRD under Discharge Authorization. This cake will typically be directly loaded via multi-step auger conveyor system into trucks for off-site shipment and use by other regional composters or agricultural entities. Some of the finished product will be used on-site by the Urban Growers Collective within the urban farming operations inside the hoop houses.

Most chemical storage will be non-hazardous or unregulated small volume. The only hazardous liquid storage on-site relates to ethylene glycol to be used in the heat exchanger system. Storage is generally limited to no more than two (2) 275-gallon totes. Tote storage of undiluted ethylene glycol will be located on the main floor of the southern portion of the Processing Building. Additionally, two (2) tanks will be connected to the heat exchanger system, the 55-gallon diluted glycol tank (T-400A) and the 238-gallon expansion tank (T-400B). (The total system volume including piping has been calculated at 2,000-gallons.) Both tanks will be located in the boiler room on the main floor of the Processing Building. Spent glycol removed from the equipment will be placed into a 55-gallon drum pending off-site shipment for disposal. Other chemical storage on-site will include household cleaning supplies, paint products, and/or fuel in small volume containers (5-gallons or less) inside flammables cabinets within the maintenance area inside the Processing Building.

The only mobile equipment expected to be utilized on-site include landscaping-associated equipment (e.g., lawn mower and snow blower) and a small-size loader unit for solid food waste handling.

8.5.7. Rodent/Vector Control. [Section 11-4-1520(A)(24)]

As required, the facility will maintain records of the monthly inspections that shall be completed by a vector control specialist. Documentation of 12 consecutive monthly inspections will be maintained by the facility. In addition to monthly inspections,

rodent/vector control is accomplished by performing all operations inside the Processing Building or the two (2) outdoor tanks. Commercially-available rodent traps will be placed throughout and around the Processing Building. Daily facility washdown will also aid in rodent/vector control. Other controls will be implemented if required.

8.5.8. Odor Control. [Section 11-4-1520(A)(26)]

A stand-alone *Odor Control and Monitoring Plan* is provided in Attachment 17. Note that odor concerns will primarily be addressed by a) only accepting wastes inside the building after roll-up doors have closed; b) maintaining the building at a negative pressure in relation to the building exterior; c) use of in-building ionizers to partially address odors, and d) use of an ionizer cannon and activated carbon adsorber system to remove odor associated chemical compounds in the air discharge from the building.

8.5.9. Hours of Operation. [Section 11-4-1520(A)(30)]

Typical operations (i.e., when food waste is imported and preliminarily processed, and when wastewater will be discharged) will be from 7:00-17:00, Monday-Saturday. However, depending on various factors, the facility could operate 24-hrs/day, 7-days/week (i.e., the facility may periodically operate on Sundays). Between two (2) and seven (7) personnel are expected to control operations on-site.

8.5.10. Groundwater Monitoring Plan. [Section 11-4-1520(8)(2)]

A groundwater monitoring plan has not been developed for this facility because the facility will not be accepting or storing hazardous liquids, and in any event, the use of groundwater as a potable water supply in the City of Chicago is prohibited by Ordinance. Conformance with the requirement to provide a Groundwater Monitoring Plan is one of the items for which the P.E. Certification of this Application is excluded from.

8.5.11. Spill Prevention and Control. [Section 11-4-1520(B)(4)]

A working version of the SPCC Plan has been prepared and is included in Attachment 15. Note that the SPCC Plan is not yet certified by a professional engineer, as the facility is not yet fully constructed or in operation. Further, an engineer's certification will only be made if it can be determined that the facility is in conformance with applicable requirements and/or may include some exclusions to the certification for non-conforming items (that presumably will be accepted by the regulatory agency of interest).

8.6 Closure Plan. *[Section 11-4-1520(A)(27)] The application for a permit shall contain a closure plan to be implemented when waste activities cease at the liquid waste handling facility. Additional requirements for the closure plan may be included in additional sections. The closure plan shall include, at a minimum, the following components, in this order:*

8.6.1. Closure Plan Activities. The closure plan shall include a listing of activities that will occur when waste related activities cease at the liquid waste handling facility including a listing of materials necessary for closure and a schedule for the completion of the closure activities.

8.6.2. Waste Removal. The closure plan shall include a plan for the removal of all waste material from the facility.

8.6.3. Equipment Decommissioning. The closure plan shall include a plan for the decommissioning and cleaning of all equipment and structures at the facility that contacted waste materials.

8.6.4. Cost Estimates. The closure plan shall include cost estimates for the completion of all closure activities. The cost estimates shall be based on the cost necessary for closure at any time during the life of the facility and shall not be discounted to current values. The cost estimate shall reflect a worst-case scenario.

8.6.5. Financing. The closure plan shall include a demonstration that sufficient financing is available to complete all closure activities.

The MP-05: *Closure Plan* is included as a subpart to the MP-01: *Operations Manual* provided as Attachment 2. The *Closure Plan* includes cost estimates for routine and non-routine closure, and is the same Plan and Cost Estimate provided to the Illinois EPA Division of Land Pollution Control. The estimated costs that have been provided in the *Closure Plan* are current values, given there is no set timeline on closure for which to project out future costs (but can be adjusted to future values if required by Chicago DPH upon review of this Application). The Financial Assurance requirements will be addressed subsequent to submission of this application after conferring with the City of Chicago as to the necessity and means to address the requirement.

8.7 Additional Requirements. *(Section 11-4-1520(A)(30)]. The Commissioner may require additional information be submitted if it is determined that the information in the application is insufficient or if the nature of the liquid waste handling facility warrants additional information to ensure the facility can be operated as proposed.*

The stipulation is understood.

9.0 Liquid Waste Handling Facility Location Standards.

All new and expanding liquid waste handling facilities seeking permits to operate within the City of Chicago shall be located in accordance with the following requirements.

9.1. Illinois Environmental Protection Act. *All Liquid waste handling facilities shall demonstrate compliance with Section 22.14 of the Act.*

Section 22.14 specifies requirements for a garbage transfer station. The facility is not a garbage transfer station; therefore, this requirement is Not Applicable. The issuance of a siting permit for the facility will constitute the State's confirmation that this provision does not apply.

9.2. Schools and Hospitals. *A liquid waste handling facility shall not be located within 800 feet of any property used for a school, hospital, nursing home, or convalescent center, unless written permission from the owner is provided for a closer distance.*

A former school (Morgan Elementary) was located and operated at 8314 South Birkhoff Avenue and 8407 South Kerfoot Avenue. When measured from the closest portion of the education or recreation portions of the School property (the northern-most portion of the 8407 South Kerfoot Avenue parcel is a fenced-off parking lot for teachers and not used for educational purposes), the southern (nearest) boundary of the Green Era property is approximately 600-ft to the north. However, as explained in a letter provided in Attachment 18, Chicago Public Schools has stated the Morgan Elementary School will not be reopened.

9.3. Lake Michigan. *A liquid waste handling facility shall not be located within the Lake Michigan and Chicago Lakefront Protection District as specified in Lake Michigan and Chicago Lakefront Protection Ordinance (Chapter, 16-4 of the Chicago Municipal Code).*

The facility is not located within the Lake Michigan and Chicago Lakefront Protection District.

9.4. 100-Year Flood Plain. *A liquid waste handling facility and all ancillary structures, including storage areas, shall not be located within the 100-year flood plain, unless the liquid waste handling facility can demonstrate compliance with the Chicago Flood Control Ordinance (Chapter 16-6 of the Chicago Municipal Code) and all other applicable state and federal requirements.*

Based upon the Federal Emergency Management Agency's (FEMA) National Flood Hazard Layer online mapping system, the property and surrounding area are designated as "Area of Minimal Flood Hazard." Since no flood threat has been identified by FEMA for the area, the facility is not within a 100-yr floodplain. Attachment 19 provides the FEMA print out showing the "Area of Minimal Flood Hazard" Designation.

9.5. Wetlands. *A liquid waste handling facility shall not have a negative impact on wetlands occurring on the subject site or near the subject site in accordance with Section 404 of the Clean Water Act (33 U.S.C. 1344) unless application is made and a permit received from the US Army Corps of Engineers and DOE approves such impact as part of the facility's permit.*

The facility is not located within or near a wetland. Figure 1 in Attachment 6 depicts the USGS topographic maps that cover the facility and surrounding area. As noted in the figure, the entire area is within highly developed, urban neighborhoods of the City of Chicago.

9.6. Endangered Species. *A liquid waste handling facility shall not pose a detrimental threat to any endangered species of plant, fish, or wildlife as defined by the Endangered Species Act (16 U.S.C. 1531 et seq.) or the Illinois Endangered Species Protection Act. (520 ILCS 10/1 et seq.).*

9.7. Historic and Natural Areas. *A liquid waste handling facility shall not pose a detrimental threat to any historic site as listed pursuant to the National Historic Preservation Act (16 U.S.C. 470 et seq.) or the Illinois Historic Preservation Act (20 ILCS 3410/1 et seq.) and designated in the Chicago Zoning Ordinance, or any natura11andmark, as designated by the National Park Service, the Illinois State Historic Preservation Officer, or as a Dedicated Illinois Nature Preserve pursuant to the Illinois Natural Areas Preservation Act (525 ILCS 30/1 et seq.).*

There are 12 species of Federally threatened or endangered species in Cook County, Illinois according to the U.S. Fish & Wildlife Service. A total of 135 species are listed as threatened or endangered within Cook County according to the Illinois Department of Natural Resources Endangered Species Protection Board.

In order to assess for potential impact to threatened/endangered species and/or historical/natural places, the USEPA Inland Sensitivity Atlas (Atlas) was accessed. The Atlas compiles information from various governmental agencies and other information sources, primarily to aid in the development of emergency response contingency planning. Information compiled includes water intakes, fuel/chemical storage, recreational areas, locks and dams, etc. The Atlas also includes information for historical/natural area and threatened/endangered species. A print out of the USEPA Atlas map for the Site and surrounding area is provided as Attachment 20.

According to USEPA Atlas, neither the property nor any adjacent property is identified as a historical place or archaeological site. No threatened/endangered species are noted within the area. Based upon further evaluation of the National Register of Historic Places and the Illinois Historic Preservation Agency listing of State Historic Site, neither the property nor the surrounding area are designated historic areas. The facility is being developed on a formerly vacant brownfield site in the Auburn Gresham neighborhood of Chicago. The site and surrounding area are not natural preserves.

10.0 Liquid Waste Handling Facility Operating Standards.

All liquid waste handling facilities permitted by the Department of Environment shall comply with the following operational standards:

10.1. Permit. *The liquid waste handling facility shall be operated in accordance with the current permit application on file with the Department of Environment; the current, written permit issued by the Department of Environment; the Standard Conditions contained in the current, written permit; and the Special Conditions contained in the current, written permit. A copy of the permit shall be maintained at the facility and shall be reviewed by the facility site manager. If the current permit application and the current, written permit conflict, the permit shall govern.*

This condition is understood. Operations will comply with the permit issued to the facility.

10.2. Hours of Operation. *The liquid waste handling facility shall only operate during those hours specified in the permit issued by the Department of Environment. In addition to the hours specified in the permit for the acceptance of waste materials, the permit may also specify hourly restrictions on other ancillary operations that occur at the facility.*

The facility shall not operate outside of the permit-specified hours.

10.3. Waste Volumes. *Waste volume limits specified by the Department of Environment in the facility's permit shall not be exceeded.*

The facility shall not accept waste in excess of the permitted limit.

10.4. Facility Cleaning. *Receiving and storage pits or tanks shall be cleared of all waste and cleaned according to the schedule outlined in the permit application. The date of each cleaning shall be recorded in a log which shall be available for inspection by the Department. Floors, equipment, and anything else that may contact the waste shall be spot cleaned on a daily basis and shall be completely cleaned on a weekly basis.*

The live-bottom receiving bunker (solid food waste) and two (2) 30,000-gallon liquids receiving tanks will be emptied of all contents on a daily basis. The facility will process all received food waste daily. Equipment washdown is expected to be performed during each day of receipt, but cleaning beyond emptying of the receiving tanks (confined-spaces) will be performed if deemed necessary. However, a pre-set schedule has not been designated because the tanks will be used for non-hazardous liquid food waste. Facility cleaning operations will be conducted daily, beyond the weekly minimum requirement. Records shall be maintained and made available upon request.

10.5. Vehicles and Equipment. *The liquid waste handling facility shall have sufficient vehicles and equipment available at all times to process all incoming volumes of waste materials.*

All received food waste will be processed daily. Generally, deliveries of solid and liquid food waste are unloaded directly into receiving equipment that are preliminary steps of the anaerobic digestion process. The facility will maintain a small skid-steer equipped with a front-end loading

bucket for transfer of solid food waste from the Processing Building main floor into the live-bottom receiving bunker, only expected at periods of peak receiving. No other vehicular equipment is anticipated to be required for use at the facility.

10.6. Air Quality. *The liquid waste handling facility shall not significantly impact air quality off-site.*

The facility has submitted an air permit application to the Illinois EPA, and an online air "permit" application was submitted to the City of Chicago DPH in order to obtain a Certificate of Operation for all air emissions equipment. The facility will not cause significate impact to air quality. All regulated air pollutants will be emitted to the atmosphere via flare, thermal oxidizer, or the emissions stack associated with the odor control system. Additional discussions regarding how the facility will address potential off-site odor concerns is provided in the MP-08: *Odor Control Plan* and MP-09: *Odor Monitoring Plan*, subparts of the MP-01: *Operations Manual* included as Attachment 2. However, for assisting the reviewer, a standalone, combined *Odor Control & Monitoring Plan* is provided in Attachment 17.

10.7. Utilities. *All necessary utilities shall be available with sufficient capacity to serve the liquid waste handling facility and its operations. In the event of a disruption of any utility service, a contingency plan shall exist to provide back-up capacity or to provide procedures for safe operation during the disruption.*

As noted previously in response to requirements specified in Section 8.4.7, the facility is connected to all necessary utilities, and those utilities are capable of servicing the facility. Section 3.2 of the MP-06: *Emergency Response Plan*, a subpart of MP-01: *Operations Manual* included in Attachment 2, provides a discussion of the facility's back-up capacity/plans in the event of an equipment failure. In short, the facility will not continue to operate during a long-term loss of utilities. Consistent with the permit to be issued by the Bureau of Land, no materials will be allowed to be imported to the facility unless the material can be appropriately processed within a 24-hr period. A portable electric generator will be brought to the facility to provide backup power, if necessary to provide power to continue anaerobic digestion of previously processed food waste, but all additional import of food wastes will be discontinued until the facility is able to be operational and compliant with permit requirements.

10.8. Equipment Maintenance. *Equipment and vehicles used at the facility shall undergo routine maintenance. The liquid waste handling facility shall develop a maintenance plan for all equipment and vehicles used in facility operations. The owner and operator shall prevent the usage of any vehicle or equipment that is in need of repair.*

As previously noted, an O&M Plan will be developed and added to the MP-01: *Operations Manual* upon the completion of construction and equipment purchasing. A copy of the plan will be provided to the Chicago DPH upon completion.

10.9. Waste Screening. *The liquid waste handling facility shall accept only those materials permitted by the Department of Environment and listed in the facility's current, written permit. All waste loads shall be screened in accordance with the load checking plan included in the application for a permit and approved by the Department. The operator shall monitor for unauthorized waste. Any unauthorized waste shall be immediately removed from the facility, in accordance with the conditions of the Department of Environment permit. The operator shall notify the Department of Environment by phone within 24 hours and in writing within two business days of any acceptance of unauthorized wastes, documenting the proper removal and disposal of the unauthorized waste.*

It is understood that the facility may not process waste not authorized by this permit. The MP-10: *Waste Control Plan* describes acceptable wastes and methods for addressing wastes that must be rejected and is provided in Attachment 16 in standalone form (but is also subpart MP-10 of MP-01: *Operations Manual* that is included as Attachment 2). The requirement to provide reporting with necessary documentation is understood.

10.10. Fire Prevention and Accident Safety Plan. *The liquid waste handling facility shall have an approved fire prevention and accident safety plan; shall operate in compliance with the performance standards for fire and explosive hazards; and shall install and maintain fire suppression equipment as specified in the Chicago Zoning Ordinance, the building regulations and applicable fire prevention regulations of the Chicago Municipal Code.*

Attachment 2 includes the MP-01: *Operations Manual* completed by the facility. Subparts to the MP-01: *Operations Manual* include the MP-04: Personnel Training Plan, MP-06: Emergency Response Plan, and MP-11: Health and Safety Plan. These plans provided details of the equipment and personnel training, response, and best management practices associated with fire prevention and medical emergency. The facility has been designed with a fire suppression system in compliance with all applicable codes. The nearest Fire Department is located approximately 7-minutes south of the facility.

10.11. Site Security. *The liquid waste handling facility shall have all operations screened from view of all passersby. A fence or natural barrier shall be constructed and maintained to prevent unauthorized access to the site.*

All composting, waste receiving, and waste handling operations are performed indoors or inside of the aboveground storage tanks (ASTs), preventing view of processing operations to all but authorized personnel. The facility is surrounded by fencing on three (3) sides, with the western property boundary being the concrete retaining wall of the adjacent railroad tracks.

10.12. Traffic. *The liquid waste handling facility shall not cause the back up of vehicles onto public roads or rights-of-way at any time. No vehicles used in the operations of the liquid waste handling facility shall be parked or wait along public streets or rights-of-way. The liquid waste handling facility shall have sufficient parking available for all personnel, visitors, and vehicles used for the operations of the liquid waste handling facility.*

It is understood that truck traffic must not backup outside of the facility. The maximum number of trucks expected in a day is 29, including solid and liquid food loads, compactor box delivery/pickup, finished product load-out, and a delivery of packaged foods. The truck volume will arrive throughout the day and is not anticipated to cause any back up situations. All trucks will enter/exit via South Wallace Street, which has minimal daily traffic, also aiding in the minimization of the likelihood of traffic backups.

The facility includes 19 parking spaces for facility personnel and visitors. The facility will employ between six (6) and eight (8) personnel across three (3) shifts. Therefore, parking at the facility is sufficient. Facility vehicles will not be parked on the adjoining streets.

10.13. Noise. *The liquid waste handling facility shall comply with the performance standards for noise specified in the Chicago Municipal Code.*

The facility shall operate within the noise limits specified in Chapter 8-32 (Noise and Vibration Control) of the Chicago Municipal Code. Specifically, the facility shall ensure compliance with the requirements of 8-32-090(a-b) for stationary mechanical sources. Sound pressure levels will be limited to 55-dBa at 100-feet or 70-dBa at 10-feet from the exterior of the facility between the hours of 8-PM and 8-AM.

10.14. Odor Control. *The liquid waste handling facility shall operate in accordance with an approved odor control plan for the prevention and treatment of malodors from the liquid waste handling facility.*

A combined *Odor Control & Monitoring Plan* is provided in Attachment 17. Each plan and are subparts of the MP-01: *Operations Manual*. The odor plans provide details on odor controls and monitoring. The operational controls on waste acceptance/rejection and appropriate handling are included in the MP-10: *Waste Control Plan* (Attachment 16).

10.15. Rodent/Vector Control. *The entire liquid waste handling facility shall be inspected by a vector control specialist for rodents and other vectors at least monthly. A record of the most current inspection and eleven previous inspections shall be maintained at the liquid waste handling facility.*

As specified, the facility will maintain records of the monthly inspections that shall be completed by a vector control specialist. Documentation of 12 consecutive monthly inspections will be maintained by the facility.

10.16. Stormwater. *Any precipitation which accumulates in the secondary containment system shall be removed within 24 hours of the time such accumulation is observed, or before the area overflows, whichever comes first. If necessary, the facility shall analyze and treat the stormwater collected from the secondary containment system to ensure that no constituents violate the appropriate discharge requirements of the MWRDGC.*

There are no secondary containment structures exposed to precipitation.

10.17. Daily Inspections. *The facility operator shall conduct daily inspections for:*

- *leaks, spills and excess corrosion for all tanks, piping systems, and any other ancillary equipment at the facility.*
- *cracks, spilling, standing liquid and any evidence of stains or residuals for all secondary containment systems.*
- *the detection of leaks, spills and deterioration of containers and the containment system. Records of all such inspections shall be made and maintained at the facility.*

Daily facility inspection will be performed by facility personnel as required. These daily inspections will be documented. The facility inspection protocol and inspection form are included in the SPCC Plan for the facility. The SPCC Plan is included as Attachment 15.

10.18. Inspections. *The liquid waste handling facility, its records and permits, shall be available to the Commissioner or authorized agent for inspections at all times during normal business hours and upon reasonable notice at other times to ensure compliance with the Municipal Code and these regulations.*

This condition is understood. Inspection of the facility shall be allowed and copies of records shall be made available upon request.

10.19. Facility Operating Record. *The facility shall maintain an on-site operating record which shall include, at a minimum, information regarding: facility cleaning; daily inspections; the date, time and description of emergencies; date and time of vector control activities and inspections; and date and time of receipt of unauthorized waste and action taken.*

All required documentation shall be completed and maintained. Example forms for these required records are included as attachments to the MP-01: *Operations Manual* (Attachment 2) and/or SPCC Plan (Attachment 15).

10.20. Record keeping. *The operator of the liquid waste handling facility shall record the following information for each load of waste entering the facility: date/time received, type of waste, volume of waste, treatment method, volume of residuals, and date/location of residual disposal. Recordkeeping shall include the proper manifesting of any waste transported from the site. These records shall be kept at the facility arid shall be available for inspection by the Department.*

All required information will be properly documented on the Form-21-001: *Feedstock Manifest Form* and in the Log-21-002: *Feedstock Manifest Log*, both of which are parts of the MP-01: *Operations Manual* provided in Attachment 2.

10.21. Reporting. *The operator of the liquid waste handling facility shall submit quarterly reports to the Department containing the following information: results of groundwater sample analysis, monthly totals of waste volumes received, monthly totals of treated waste intended for disposal, monthly totals of treated waste intended for reuse, and monthly totals of wastewater discharged to the wastewater treatment facility. These reports shall be submitted within 45 days from the end of each quarter. This information may be submitted as part of a facility's monthly Environmental Control Fund payments.*

The requirement to submit quarterly reports is understood. As required, reports shall be submitted no later than 45-days from the end of the quarter (i.e., May 15, August 14, November 14, and February 14). Reports will contain all required information and supporting documentation with the exception of results of groundwater monitoring, which is not planned (as previously discussed in response to 8.5.10) because the facility does not store/handle hazardous liquids.

10.22. Correspondence. *The operator shall provide the Department with copies of all correspondence to or from the IEPA, the USEPA and the Army Corp of Engineers including, but not limited to: notices of violation, letters, permit applications, reports, groundwater monitoring reports, and annual reports.*

This condition is understood. Any correspondence, permit, etc. from a regulatory agency that the Chicago DPH wishes to receive will be provided. Electronic submission will be promptly completed, with a hard copy submission, if requested.

11.0 Liquid Waste Handling Facility Design Standards.

Liquid waste handling facilities permitted by the Department of Environment shall comply with the following design standards. These standards shall comply to new facilities and the expansion of existing facilities.

11.1. Liquid Waste Handling Facility. *The transfer, storage, treatment, and handling of waste materials shall be performed in a manner that prevents all precipitation from contacting the wastes.*

All operations are conducted indoors or inside of the ASTs. No contact of received wastes with precipitation will occur.

11.2. Building Layout. *The building layout shall allow for the free flow of material through the liquid waste handling facility.*

The Processing Building is appropriately sized and constructed to allow for ample space for all equipment, vehicles, and personnel. Driveways have been constructed on both sides of the Processing Building to allow for access from both the east and west, or for drive-through operations.

11.3. Processing. *The liquid waste handling area shall conform to Occupational Safety and Health Administration regulations including confined space regulations. All processing equipment shall have lockout devices and guarding. Equipment shall be explosion-proof and/or be equipped with explosion suppression controls if the potential for an explosive atmosphere is present. Emergency stopping devices shall be supplied for processing, mixing, and/or treatment equipment. Any elevated platform shall have at least two access points. Processing equipment shall be sufficient to maintain the design throughout capacity specified in the permit.*

All applicable Occupational Safety and Health Administration regulations will be adhered to by the facility. Standard Operating Procedures for confined space entry (SOP-21-004) and lock out/tag out (SOP-21-003) have been completed and are included in the MP-01: *Operations Manual* provided in Attachment 2. All equipment has been sized to handle the anticipated volume of food waste to be accepted by the facility. A complete hazard analysis has been completed by the electrical engineer and necessary controls, are in place, where applicable, to prevent an explosion. Emergency shut-off devices are provided on all applicable equipment.

11.4. Foundation Analysis. *The proposed foundation shall be suitable for the building design and function and shall meet all applicable regulations.*

The Greenberg Farrow is the structural engineering firm of record for the project and the structural drawing set is provided in Attachment 7. Also included in Attachment 7 are copies of the civil/architectural drawings. Copies of the building permits and/or inspections by the Department of Building will be provided upon request.

11.5. Piping Systems. *The piping for the liquid-waste handling facility shall be designed and constructed to resist the pressures and temperatures expected at the facility. The piping shall be constructed of a material that resists corrosion and is compatible with the waste or other materials handled by the facility.*

All piping utilized at the facility is compatible with the materials of conveyance and is appropriate for the operating conditions. Details of piping layout and material of construction are included on the "DP" drawings provided in Attachment 7.

11.6. Tank Design. *Tanks at the facility shall be constructed of materials that are compatible with the waste or other materials stored in the tank. Tanks shall be leak-free and shall be capable of withstanding the pressures expected within the tanks. Tanks shall be equipped or located such that precipitation cannot enter the tank.*

The two (2) primary ASTs at the facility are field-erected tanks constructed of carbon steel shell and roof with concrete pad floor. The tanks are fully enclosed and gas-tight, preventing entry of precipitation. The design specifications for the foundations of the ASTs are provided in Attachment 7. The sub-grade storage tanks inside the Processing Building lower level are cast-in-place concrete tanks that bulk-head into the lower level. The tank construction and applied coating ensure that all tanks are compatible with the materials of storage. Equipment specifications for the tanks are provided in Attachment 10.

11.7. Pit Design. *Pits at the facility shall be constructed of materials that are compatible with the waste or other materials stored in the pits. Pits shall be leak-free and shall be capable of withstanding the pressure expected within the pits. Pits shall be equipped or located such that precipitation cannot enter the pit. Pits constructed of concrete shall use epoxy coated rebar and shall be lined with a suitable material making the pit impervious to liquids.*

No pits at the facility are intended for liquid waste storage. The only pits at the facility are the concrete sumps pits (not open to the underlying soil/groundwater) located in the lower level intended for the collection of waters from the trench drains located throughout the Processing Building. A concrete groundwater sump is also located in the northwest corner of the lower level. Though not pits, the eight (8) sub-grade concrete liquid storage tanks are coated with epoxy, consistent with the specified requirements for pits. The interior walls and concrete floor of the two (2) outdoor tanks are also provided a coating.

11.8. Secondary Containment. *Secondary Containment volume shall be equivalent to the volume of the largest tank plus precipitation from a 25 year, 24 hour rainfall event. The secondary containment installations shall allow for the complete removal of any spilled waste or other materials.*

Refer to earlier response to requirements specified under 8.4.22.

To meet the requirements for secondary containment, most storage tanks at the facility are located inside of the Processing Building. The building has concrete walls and floor without any open floor drains that connect to the sewer system. These tanks are not exposed to precipitation.

An exemption from the requirements for sized secondary containment of the two (2) outdoor tanks is requested based upon the limited threat to public health and/or the environment in the event of a release. Partial containment on-site is provided by the stormwater detention basin at the southeast corner of the facility with 659,647-gallons capacity and the grading of the facility generally directing flow towards catch basins that connect to the on-site stormwater sewer system, which directs flow into the detention basin. In addition, the facility commits to promptly respond to all spills. The partial containment on-site and a commitment to promptly respond to all spills are proposed as secondary containment equivalency.

Note that DAI's P.E. Certification of this Application does not include a Certification of conformance with the requirements specified in 8.4.7.2.

11.9. Monitoring Wells. *Monitoring wells and piezometers shall be constructed in accordance with IEPA standards. All wells and piezometers shall be equipped with locking covers to prevent tampering. Monitoring wells shall be constructed and developed in accordance to IEPA regulations and applicable state laws. A minimum of one upgradient well and two downgradient wells shall be installed. The upgradient wells shall be located as close to the facility property boundary as practical. The downgradient wells shall be located as far away from the property line as practical so as to detect a release before contamination leaves the facility property.*

Based on the nature of the materials being accepted and processed at the facility, and because the use of groundwater as a potable water supply is prohibited in Chicago by ordinance, we argue that groundwater monitoring requirements should be waived.

Note that DAI's P.E. Certification of this Application does not include a Certification of conformance with the requirements specified in 11.9 (as there are no monitoring wells remaining on-site as far as DAI is aware of).

11.10. Lighting. *The light levels of each area, including the tipping floor, processing line, equipment maintenance areas, washrooms, office, storage areas, and other rooms shall conform to accepted standards. Exit lighting shall be provided at each exit.*

The design of the building by Adams & Christensen Engineering, Inc., a design engineering firm, in conjunction with Terra Engineering Ltd., a civil engineering firm, and MKB Architects ensures that adequate lighting has been provided both inside and outside. Figure 3A in Attachment 6 depicts the locations of exterior lighting. Interior lighting is shown on the civil/architectural drawings included in Attachment 7.

11.11. Heating, Ventilation and Air Conditioning. *Heating, ventilation and air conditioning systems shall be capable of maintaining comfort and minimum fresh air requirements. Fresh air quantities shall be provided talking into consideration exhaust emission and employee fresh air requirements. An air filtering system shall also be designed and installed to meet all applicable regulations for maximum dust and contaminant levels in occupied spaces.*

The design of the building by Adams & Christensen Engineering, Inc., a design engineering firm, in conjunction with Terra Engineering Ltd., a civil engineering firm, and MKB Architects ensures that appropriate ventilation has been installed. Copies of the civil/architectural drawings are included in Attachment 7.

11.12. Roadways. *The liquid waste handling facility shall be designed and operated to allow traffic to flow smoothly into, through, and out of the site without interfering with other vehicles or the operations of the liquid waste handling facility. Interior roads shall be designed to withstand the loads expected at the facility. At a minimum, all roads and parking areas shall be paved or provided with other DOE approved dust control measures.*

All truck traffic will use the eastern entrance/exit located on South Wallace Street. The southern driveway that leads to West 83rd Street is for personal vehicles of facility personnel and public visitors. The driveways have been constructed on both sides of the Processing Building to allow for access from both the east and west, or for drive-through operations. All roadways and parking are asphalt paved. Dust control will be performed as detailed in the MP-12: *Fugitive Dust Operating Program*, subpart of MP-01: *Operations Manual* included in Attachment 2. A standalone copy of the *Fugitive Dust Operating Program* is provided in Attachment 21.

11.13. Parking. *The liquid waste handling facility shall have sufficient parking for all vehicles involved in its operation.*

The facility includes 19 parking spaces for facility personnel and visitors. The facility will employ between six (6) and eight (8) personnel across three (3) shifts. Therefore, parking at the facility is sufficient.

11.14. Fueling Facilities. *If equipment and vehicles will be fueled on site, a fueling station shall be constructed that provides secondary containment of flammable materials. The fueling station shall be designed and constructed in accordance with the Chicago Municipal Code and shall be approved by the State Fire Marshall's Office and the Chicago Fire Department.*

There are no on-site fueling stations at this facility. The only "fueling operations" might be small volume transfer from hand-held containers into equipment such as a lawn mower, snow blower, and other landscaping-associated equipment.

11.15. Screening. *The liquid waste handling facility shall have adequate screening or fencing to control noise, dust, and prevent unauthorized access.*

Details of facility screening/fencing is previously discussed in response to the requirement specified under 8.4.17.

ATTACHMENT 1
PROJECT GENERAL DESCRIPTION NARRATIVE

Facility and Process General Description

Facility Location

An 8.905± acre property addressed as 650 West 83rd Street in Chicago and owned by Green Era Educational NFP is being developed into a food waste (solid and liquid) recycling facility (Green Era Renewable Energy and Urban Farming Campus). The facility and associated equipment will be owned and operated by Green Era 83rd Street, LLC. Figure 1 is a topographical Site Location Map (see Attachment B). Construction is projected to be completed on April 1, 2022, and startup of operations is projected to be on May 1, 2022.

The facility is being built in the Auburn Park neighborhood of Chicago within an industrial area bound by residential neighborhoods. The facility is bound by Aabbitt Adhesives, then a ComEd substation to the north; by South Wallace Street, then Diamond Waste Recycling or a vacant lot used for truck parking to the east: by West 83rd Street, then a church or Mahalia Jackson Park to the south; and by Metra railroad tracks, then a residential neighborhood to the west. Figure 2 (see Attachment B) is an aerial view of the development property and surrounding area.

Facility General Description

Development of the property will include the construction of two (2) buildings, two (2) aboveground storage tanks (ASTs), and the erection of approximately four (4) "hoop houses" (i.e., simple greenhouse structures) that will be used to perform indoor urban farming within the "Urban Agriculture Area." Figures 3-3A provide a site plan and site detail, respectively, with pertinent information (e.g., buildings, utilities, process equipment, etc.).

The facility will be a food waste recycling facility developed to create commercial compost and biomethane for injection into the local natural gas utility system. The facility will process food waste from the greater Chicago metro-area and surrounding Cook County. The majority of waste processed at the facility is expected to be generated within a 30-mile radius of the facility, but may be taken from an approximate 75-mile radius (which would include other "collar" counties such as Lake, DuPage, and Will Counties).

Two (2) forms of food-based waste are to be received: solid food waste and pumpable liquid commercial food waste. Compostable landscape waste will not be accepted by this facility for digestion. The solid food waste that will be accepted by the facility includes food waste from food processors (dairies, bakeries, potato chip plants, etc.), grocery stores, and restaurants in the Chicago metro-area. The facility will also be equipped to accept bagged kitchen waste from neighborhood curbside collection programs, as well as packaged food waste. Packaged food waste is any organic food waste that is contained within consumer packaging (e.g., beverages or soup in cans, milk or juices in plastic jugs, bottles, or cartons, and single serving condiment packs). Packaged food waste will be separated at the facility, while most accepted food will be source-separated (i.e., any food waste that has been pre-sorted from other waste by the customer or waste generator).

Pumpable commercial food waste includes whey, liquid ice cream mix, end of batch soups, and sauces and syrups. Fats, oils, and grease (FOG) collected from grease traps at restaurants and food processors will also be accepted. The facility will receive pumpable food waste in closed tankers.

Included in what is proposed to be accepted by the facility are wash/rinse waters generated off-site from the rinsing (with water) of tanker trucks or railcar tankers used to transport food products. No washing/rinsing of the interiors of transport containers will occur at the facility. It is our opinion that such wash/rinse waters, composed of rinse water and food products, is food waste. The facility will not accept wash waters that have been generated by the clean-out or rinsing of tanker trucks or railcar (or any other transport containers) used to transport chemicals or petroleum oils. It is further understood that such wastewaters generated by such washing/rinsing would be subject to categorical pretreatment standards of 40 CFR 422.

The facility has been designed to receive and treat 80,000-tons per year of food waste, 50,000-tons/year of solid food waste and 30,000-tons/year (7,195,000-gallons/year) of pumpable food waste. Typically, the facility will receive eight (8) to 16-loads/day of solid food waste via compactors, roll-off boxes, and dump or walking floor trailers (averaging 12-tons/load) and five (5) to 8-loads/day of pumpable food wastes via tanker trucks (averaging 13-tons/truck). Palletized, packaged, food products will also be accepted, typically two (2) loads per week. Typical operations (i.e., when food waste is imported and preliminarily processed, and when wastewater will be discharged) will be from 7:00-17:00, Monday-Saturday. However, depending on various factors, the facility could operate 24-hrs/day, 7-days/week (i.e., the facility may periodically operate on Sundays). Between two (2) and seven (7) personnel are expected to control operations on-site.

The method of "composting" at this facility will be via a conventional wet anaerobic digestion system, with most operations conducted inside an approximately 35,000-ft^2 Processing Building or inside the two (2) large ASTs located to the north of the Processing Building. The Illinois Environmental Protection Agency (Illinois EPA) views the anaerobic digestion of food waste as "in-vessel composting," and defines "composting" as "the biological treatment process by which microorganisms decompose the organic fraction of waste, producing compost." The Illinois EPA land pollution control permit will be issued for a composting facility. Urban farming using some of the finished product generated during anaerobic digestion will be performed within the "Urban Agriculture Area" inside hoop houses (i.e., simple greenhouse structures). The facility will be continuously monitored, with anaerobic digestion operations occurring in the digester tank constantly (24-hrs/day, 7-days/wk).

The below discussion provides a detailed narrative description of the anaerobic digestion process, which includes water use/wastewater generation and discharge. The biogas handling process that generates biomethane for injection into the natural gas utility is also discussed for completeness of understanding of facility operations, but no water use/wastewater discharge is associated with the biogas handling. The only other wastewater associated with the facility is from water domestic use/discharge. Figure 4 depicts the combined facility process flow diagram, including water use/wastewater discharge.

Anaerobic Digestion Process Description

The wet anaerobic digestion process will be completed inside the large 1,680,000-gallon anaerobic digester (AST, 75.66-ft diameter by 53-ft tall with 9-ft domed roof) located to the north of the Processing Building, where the actual "in-vessel" composting will occur. Supporting the

operations are an approximately 35,000-ft^2 Processing Building (waste receiving and preliminary processing, and digestate dewatering) and the 320,000-gallon biomass equalization tank (AST, 33.63-ft diameter by 53-ft tall with 9-ft domed roof) located north of the building and adjacent to the anaerobic digester AST (equalization and feedstock "conditioning" in advance of being pumped to the digester tank).

Two (2) forms of food-based waste will be received by the facility: non-pumpable solid food waste and pumpable liquid commercial food waste. The facility will receive solid food waste via compactors, roll-off boxes, and dump or walking floor trailers. Packaged food products will also be accepted, with typical receipt of two (2) palletized loads per week. Tanker trucks will deliver pumpable food wastes. All food waste will be normally processed the same day it is received.

Solid food waste received by the facility will be unloaded/tipped into one (1) live-bottom receiving bunker. Trucks delivering solid food waste will back into the receiving bay through the roll-up overhead door, reversing to the end of the main floor inside of the Processing Building. Solid food waste is subsequently tipped from the main floor into the live-bottom receiving bunker located in the lower level of the Processing Building. A simple garden hose will be available for post-tipping exterior wash down (no internal container or truck wash down), with collected water captured by trench floor drains that connect to sump pits (collected water subsequently transferred to concrete sub-grade holding tanks). The live-bottom receiving bunker is designed to process approximately 90-yds^3 (between 2 and 3 truckloads). Tipping space will be provided on the main floor of the Processing Building to hold additional loads during busy periods if the bunker is full (i.e., greater than the 90-yd^3 capacity). Tipping on the floor will be accomplished by trucks reversing through the two (2) roll-up overhead doors top the adjacent south of the receiving bay. Packaged food products will be manually added into the bunker by facility personnel.

Pumpable food wastes will be unloaded into two (2) 30,000-gallon concrete sub-grade holding tanks (T-050A and T-050B) located in the lower level of the Processing Building. Tanker trucks will pull onto the main floor inside the north end of the Processing Building for subsequent gravity discharge into the two (2) 30,000-gallon concrete sub-grade holding tanks. Water collected by the in-building floor drains during post-unloading wash down of the exterior of trucks/containers will be transferred into the concrete sub-grade holding tanks.

From the live-bottom receiving bunker, solids will be transferred at an average of 28-yds^3/hr (12-tons/hr) via a multi-step inclined, enclosed shaftless screw auger conveyor into one (1) Wackerbauer TM 75 separation mill located on the main floor of the Processing Building. The separation mill is expected to be able to process the daily solid food waste intake within a 2-shift (16-hrs) work period. The separation mill will be used to pulp the organic waste fraction and remove non-digestible materials (e.g., packaging). The separation mill is a specialized type of hammer mill. The hammers rotate inside of a chamber, separating packaging and pounding the solid food waste (i.e., pulping). Material rejected from the separation mill is conveyed away by a multi-step belt conveyor system to the two (2) 40-yd^3 compactors located inside the Processing Building on the main floor for subsequent off-site disposal at a licensed municipal waste landfill. Liquids from the two (2) 30,000-gallon storage tanks will be transferred into the separation mill via progressive cavity pumps and combined with the pulped solid waste to form a homogenized slurry (approximately 14% solids).

The homogenized slurry created in the separation mill will be transferred via auger conveyor into one (1) slope-bottom grit hopper (S-065) with 5,500-gallon holding tank (T-065A) located in the lower level of the Processing Building. The grit hopper is used to allow for the settling of dense grit such as stone, sand, glass, organic calcium (shells and bones), and larger diameter packaging. Settled solids will be removed from the grit hopper by inclined auger conveyor that will deposit the materials into a holding bin for subsequent transfer into the two (2) 40-yd^3 compactors located inside the Processing Building on the main floor. Any liquids will drain from the inclined screw conveyor back into the grit hopper.

The homogenized slurry with settled solids removed (referred to as feedstock) will be pumped (approximately 80,000-tons/year, 55,000-gallons/day) from the grit hopper through piping into the one (1) 320,000-gallon Biomass Equalization Tank (T-100) located to the north of the Processing Building. The Biomass Equalization Tank is used to "condition" (hydraulic buffering and batch equalization) the feedstock. Hydrolysis and acidification (initial steps of the anaerobic digestion process) will begin in the Biomass Equalization Tank, breaking down the complex carbon chains of the food waste into simple volatile fatty acids (e.g., acetic acid, butyric acid, and propionic acid). A center-mounted agitator mounted to the top of the tank will limit stratification.

The "conditioned feedstock" is then transferred via pump and piping from the Biomass Equalization Tank to the one (1) 1,680,000-gallon Digester Tank (T-105) located to the north of the Processing Building and adjacent to the Biomass Equalization Tank. The pumps utilized for transfer are located inside the lower level of the Processing Building (i.e., feedstock does not flow directly from the Equalization Tank to the Digester Tank, but is pumped into and back out of the Processing Building). Transfers occur in set intervals, usually once per hour. The volume of material transferred will be determined by the operator to optimize throughput and biogas production. The anaerobic digestion process is carried out in the Digester Tank. Other than the slow, continuous mixing, all operations within the digester tank are carried out by the anaerobic bacteria. To maintain the optimum temperature in the Biomass Equalization Tank and the digester AST, two (2) natural gas-fired boilers operated on-site will warm a glycol/water solution utilized for non-contact heat transfer via double pipe heat exchanger connected to internal heating piping. Heating will also be performed (when needed) when transferring conditioned feedstock from the Biomass Equalization Tank to the Digester Tank.

The liquid product of anaerobic digestion (referred to as digestate) will be pumped from the Digester Tank to one (1) 30,000-gallon concrete sub-grade holding tank (T-205) located in the lower level of the Processing Building (adjacent to tanks T-050A and T-050B). Concrete sub-grade holding tank T-205 is used for the temporary storage of digestate before the dewatering step. Prior to discharge into T-205, the digestate will pass through a Huber 290 Strainpress® (S-205), a specialized in-line screw press that removes non-digestible materials not previously captured by the separation mill or grit hopper (e.g., pieces of paper or plastic packaging). The screened digestate will drop from the screw press located on an equipment mezzanine in the Processing Building into tank T-205 via piping; non-digestible materials screened from the digestate will drop into the belt conveyor that runs to the two (2) 40-yd^3 compactors located inside the Processing Building on the main floor.

Digestate will be pumped from the 30,000-gallon concrete sub-grade holding tank for dewatering in one (1) 2-stage belt (Y-211) press located on the main floor of the Processing Building. During transfer of the digestate to the belt press, polymer will be injected into the feed pipe (i.e., in-line addition) to promote formation of flocculation. Undiluted polymer will be received as a liquid emulsion in 275-gallon totes and subsequently diluted in a 2,000-gallon AST (T-210B) located above T-210A on the main floor of the Processing Building. (A 14,000-gallon sub-grade concrete tank (T-210A) located in the lower level of the Processing Building has been constructed for future undiluted polymer storage.) After in-line mixing, digestate is distributed into a 200-gallon tank (T-211) to allow for approximately 2-minutes of flocculation before continuing onto the first stage of the belt press (the gravity belt). The gravity belt allows free water to gravity drain, thickening the digestate. The thickened digestate then moves into the pressure section, where the filter belts progressively squeeze the thickened digestate to further remove free water. The dewatering process creates a "cake" that is approximately 20 to 25% total solids at a rate of 4-tons per hour. This cake is considered finished product that will typically be directly loaded via multi-step auger conveyor system into trucks for off-site shipment and use by other regional composters or agricultural entities. Some of the finished product will be used on-site by the Urban Growers Collective within the urban farming operations inside the hoop houses or approximately two (2) semi-loads (approximately 44-yd^3) per day of finished product will be transported off-site or used in urban farming operations on-site. If excess finished product is generated that cannot be immediately utilized on-site or shipped off-site, the material will be temporarily stockpiled on the concrete floor inside the approximately 5,600-ft^2 Compost Loading and Handling Building (Pole Barn). Trucks will enter the Pole Barn for indoor loading and exit the opposite side (i.e., drive through operation). The Pole Barn will also be used for the stockpiling of wood chips and coir (coconut husks) obtained from the City of Chicago or commercial landscaping companies for mixing with finished product. All mixing and loading will take place inside the Pole Barn building.

All water removed by the 2-stage belt press (referred to as filtrate) will gravity drain from the press into two (2) 30,000-gallon tanks (T-250A and T-250B) located in the lower level of the Processing Building. A trench floor drain and sump located in the dewatering area on the main floor of the Processing Building will collect washdown water/overspray that will be transferred via pump from the sump pit into the two (2) 30,000-gallon concrete sub-grade holding tanks (T-050A and T-050B). The filtrate from tanks T-250A and T-250B will be discharged as process wastewater into the municipal combined sewer system via on-site manhole (Outfall 1A) under an approved Discharge Authorization from the Metropolitan Water Reclamation District of Greater Chicago (MWRD). No "pretreatment" of this wastewater (i.e., the filtrate) is expected to be conducted, or necessary.

Processing Building Air Odor Control (Associate Process to Anaerobic Digestion)

To address potential odors and any regulated contaminants in the air space within the Processing Building, the building will be maintained at a slight negative pressure and the emissions from the building will be routed via the HVAC system through two (2) control devices: an ionization reactor (a.k.a., ionizer cannon) and an activated carbon guard bed. Two (2) streams of air will be drawn from the Processing Building, one (1) from the southern portion/dewatering area and one (1) from the northern portion/feedstock receiving area. All of this building air will pass through banks of ionization reactor units installed within the building air duct system. In addition to the HVAC

system, air vented from the concrete sub-grade holding tanks, the separation mill, and the slope-bottom grit hopper will also be treated by the odor control devices. The air is drawn from the building and sub-grade tanks by two (2) air handlers (i.e., exhaust fans) located outside the west wall of the Processing Building. From the air handlers, air will pass through two (2) 40-ft modified shipping containers, the first with the ionizer cannon installed and the second loaded with 16 activated carbon cells ("carbon guard bed"), before exiting the odor treatment system via vertical stack. There will be no water use or wastewater generation and discharge as a result of this air pollution control process.

Biogas Handling Process Description (Associate Process to Anaerobic Digestion)

Biogas (consisting primarily of methane) will be produced by the bacteria during the anaerobic digestion process at an estimated generation rate of 400-scfm (AVG) 500-scfm (MAX). The gas will collect within the headspace (top) of the Digester Tank, removed by piping connecting the roof of the tank to the biogas handling equipment. Additionally, any gases produced in the Biomass Equalization Tank, primarily Carbon dioxide and trace levels of Hydrogen sulfide, will be blended with the biogas generated in the digester (by piping running from the Biomass Equalization Tank roof to the Digester Tank roof).

Biogas is typically transferred to the pressure swing adsorption (PSA) system, which is the upgrading equipment that physically separates the methane from the other gasses in the biogas. The upgrading system consists of several equipment skids situated to the north of the Processing Building and east of the Digester Tank. The first equipment skid of the biogas upgrade process includes a compressor, resulting in a pressure of 150-psig and sour water condensation. The second skid consists of the PSA biogas upgrading system that will be used to produce pipeline quality biomethane from the digester biogas. Simply put, the PSA system "cleans up" the biogas by removing Carbon dioxide, Hydrogen sulfide, and other trace gases, producing a concentrated biomethane (the product) and "tail gas" (i.e., the non-methane gases). The PSA system has a maximum biogas input capacity of 400-scfm, producing biomethane at a rate of 226-scfm and tail gas at a rate of 155-scfm.

The biomethane produced in the PSA then passes through another compressor unit and a regulator before being injected back into the natural gas distribution piping. Any excess biomethane that cannot be transferred into the distribution piping (assumed to occur only 120 to 240-hrs/year) will be burned via the on-site flare (F-370), located within the same general location as the biogas upgrading equipment. (The scenario whereby biomethane is burned in the flare will rarely occur, as biomethane will not be produced if the public utility cannot or will not accept the biomethane, and biogas will be routed directly to the flare instead.) The tail gas discharge from the PSA system will be sent to the thermal oxidizer (F-330), situated adjacent to the flare.

When necessary due to system upsets, maintenance, or when the rate of biogas generation exceeds the design maximum capacity of the PSA system, biogas that cannot be transferred to the biogas upgrading process will be routed directly to the flare. The flare is designed to burn up to a maximum flow rate of over 800-scfm of biogas, though the digester is only capable of generating a maximum flow rate the 500-scfm. As such, the flare is designed to handle the maximum flow rate of biogas the digester can generate (i.e., a 100% by-pass of the upgrading equipment as

necessary). There will be no water use associated with this air pollution control equipment. Any condensation removed from the equipment will be handled by the anaerobic digestion process and ultimately discharged as wastewater.

Water Intake/Discharge/Treatment

Domestic water will be obtained from the City of Chicago (account numbers 1347789-699385 and 1347789-699386) via tap into the water main located below West 83rd Street. A single 8-in service line runs underground from the water main to the aboveground valve box located near the southwest corner of the facility. The underground piping transitions from below to aboveground inside the valve box, splitting into two (2) lines, a 6-in metered domestic service feed and an 8-in fire water feed. The domestic service feed is equipped with a 3-in diameter meter (Badger Meter, serial 190096455). The 8-in fire water feed includes a metered by-pass line equipped with a 5/8-in meter (Badger Meter, serial 190150616). Both feeds transition back underground after the meters and inside the valve box, run along the western edge of the 35,000-ft^2 Processing Building, entering through the approximate center of the west wall.

Municipal water intake will be utilized for domestic use (i.e., sinks, toilets, etc.), polymer makeup (for improved solids removal during post-digestion dewatering), and equipment/facility wash water. Four (4) operations conducted by the facility will account for the equipment/facility wash water generation:

- Wash down following unloading of food waste containers, trucks, and tankers (pre-digestion);
- Rinsing of separated grit prior to transfer to garbage compactors (pre-digestion);
- Dewatering belt press clean rinsing (post-digestion); and
- General housekeeping.

The estimated water use volumes are as follows:

- Domestic use – 385-gallons/day average; 575-gallons/day maximum
- Polymer makeup – 13,500-gallons/day average/maximum
- Wash water – 12,000-gallons/day average; 12,800-gallons/day maximum
    - Pre-digestion and housekeeping – 7,200-gallons/day average/maximum
    - Post-digestion – 4,800-gallons/day average; 5,600-gallons/day maximum

All City of Chicago water intake will discharge to the MWRD. The combined total average discharge volume to the MWRD is estimated to be 60,385-gallons/day, consisting of the 385-gallons domestic wastewater and an estimated 60,000-gallons of combined process wastewater. Maximum discharge volume is estimated as 108,575-gallons/day, consisting of 575-gallons domestic wastewater and 108,000-gallons of combined process wastewater. The maximum process wastewater value of 108,000-gallons/day is estimated based on the maximum capacity of the filter press (maximum potential volume generated by 24-hrs operation of the belt press at maximum capability).

The estimated daily discharge to the MWRD will exceed the volume of water intake. The excess volume comes from the imported liquid food waste, with the wastewater ultimately generated by the belt press dewatering step (i.e., filtrate). The filtrate and any other small quantities of wastewater generated by washing down of the filter press will be collected in the two (2) 30,000-gallon concrete sub-grade holding tanks (T-250A and T-250B). This combined process wastewater will be discharged continuously or semi-continuously, depending on the quantities generated and the number of shifts per day the facility is actively dewatering digestate. Process wastewater discharge flowrates are estimated as follows:

- On a weekly basis, it is estimated that 420,000-gallons of process wastewater will be generated and discharged. If the facility is operating on a 7-day basis, that corresponds to a daily discharge volume of 60,000-gallons/day. If the facility is operating 5-days/week, that corresponds to a daily discharge volume of 84,000-gallons/day.
- When discharging, the typical discharge flowrate will be on the order of 80-100-gallons/minute (gpm), though the discharge pump is rated up to a maximum of 220-gpm.
- A daily discharge volume of 60,000-gallons/day at a flow rate of 80-gpm corresponds to 12.5-hours of discharge (of process wastewater, with the domestic wastewater quantities practically insignificant). As such, under typical operations, the facility may be discharging from 7:00 – 19:30 (7-AM to 7:30 PM). However, it is possible that discharge could occur at any time of day, on any day of the week.
- The facility has the capability of throttling down the discharge pump, and utilizing the full 60,000-gallons of holding tank storage capacity, so as to slowly discharge over the course of 24-hrs at discharge flowrates as low as approximately 50-gpm.

No regulatory pretreatment of this wastewater (i.e., the filtrate) is required, and no form of treatment is expected to be conducted or necessary to maintain compliance with Appendix B discharge limitations. The two (2) 30,000-gallon concrete sub-grade holding tanks release into a 4-in diameter force main that exits the Processing Building at the western portion of the southern wall.

Additional discharge from the facility will result from continuous discharge of domestic wastewater at an estimated 385-gallons average, 575-gallons maximum. This minimal additional volume will not be collected in the 30,000-gallon concrete sub-grade holding tanks, but will be directly discharged into the gravity sanitary sewer that exits the Processing Building at the approximate center of the southern building wall and then flows to a manhole (where the 4-inch diameter process wastewater force main also discharges into to create the combined discharge flow).

The facility combined wastewater then flows through on-site sewers before discharging into the existing combined sewer system located below West 83rd Street to the south of the facility. Because the already-installed final on-site manhole (located immediately east of the West 83rd Street entrance drive near the south-center property boundary) is not designed to allow flow measurement (inlet and outlet are at 90-degrees from each other), the facility is instead proposing to install an additional manhole ("proposed sampling and metering manhole", designated as Outfall 1A) just upstream of the final manhole, at a location 26-ft west of the western extent of West 83rd Street entrance driveway. This proposed sampling and metering manhole will allow installation of a

flume so as to measure flow and will also support the placement and operation of an automatic sampler. This proposed metering manhole is designated as Outfall 1A (instead of the unsuitable final on-site manhole). Collection of discharge samples at the metering manhole will still include the facility combined wastewater (no blind ties or other connections exist subsequent to the metering manhole), therefore the metering manhole will be representative of combined facility discharge. There are no blind connections to the final manhole. In other words, the flow in the metering manhole will always be exactly the same flow in terms of volume and characteristics as the flow through the final manhole.

In order to accurately monitor the wastewater discharge rate, an 8-in Palmer-Bowlus flume will be installed within the metering manhole (Outfall 1A). The discharge volume through the Palmer-Bowlus flume will be monitored by a VegaPuls C21 radar level (non-contact) and Vegamet 861 flow computer. As a flow-based meter used to directly tally discharge, calibration of the meter and flume will be checked monthly and an annual calibration/certification will be completed by a factory-authorized representative, as required.

Discharge samples will be collected from the metering manhole during collection of semi-annual compliance and User Charge (annual at a minimum) sampling. Please note, the facility will additionally install a separate in-line flow meter and auto sampler inside the Processing Building at a point before the processing wastewater mixes with any sanitary wastewater. This auto sampler will be used for process monitoring and control purposes, not MWRD sampling requirements.

ATTACHMENT 2
MP-01: OPERATIONS MANUAL

Operations Manual

Master Controlled Document Index

Doc. No. MP-01
Green Era
Organics Recycling Facility

650 W. 83rd Street

Cook County, Chicago, Illinois 60620

Prepared By

Green Arrow Engineering

2759 Long Road

Wooster, OH 44691

REVISION LEVEL	DESCRIPTION	ISSUE DATE
R0	INITIAL RELEASE	10/2/21
R1	ADDED CODE REF. AND UPDATED FORMATTING TO PREVENT TABLES FROM SPANNING PAGES.	10/25/21
R2	ADDED MP-12: FUGITIVE DUST OPERATING PROGRAM	10/27/21

Contents

1 Purpose 1

2 Regulatory Requirements 1

3 Accessibility 1

4 Control 1

5 Training 1

6 Operating Manual Constituent Documents, by type 2

6.1 Management Plans (MP) 2

6.2 Drawings – (DWG) 3

6.3 Forms – (FORM) 3

6.4 Lists – (LIST) 4

6.5 Logs – (LOG) 4

6.6 Permits – (PERMIT) 5

6.7 Specification, Equipment (ES-X-RY) 5

6.8 Standard Operating Procedures - (SOP) 6

1 Purpose

Green Era's Operating Manual shall include and organize all controlled documents to support and describe the operation of the Organics Recycling Facility. The Operating Manual provides a framework for adding new procedures and instructions.

2 Regulatory Requirements

To construct and operate a food waste recycling facility, Green Era is required to apply for and obtain permits from the following regulatory agencies, and as part of that process, to develop and maintain a Facility Operations Manual or Operating Plan:

Illinois EPA (IEPA) Division of Land Pollution Control: 35 Illinois Administrative Code (IAC) Section 807 regulations governing Solid Waste Management facilities.

Illinois EPA Division of Air Pollution Control: 35 IAC 201 regulations governing emissions of regulated air contaminants.

City of Chicago: Municipal Code 11-4-620 governing facilities emitting air contaminants and air pollution control equipment.

City of Chicago: Municipal Code 11-4-2520 governing Recycling Facilities.

City of Chicago: Municipal Code 11-4-250 governing Liquid Waste Handling Facilities.

3 Accessibility

The Operating Manual shall be maintained electronically on Green Era's cloud storage and be made available to all employees of Green Era.

4 Control

Any printed copies of any part of the Operating Manual shall be considered uncontrolled documents as they may not reflect the most recent revision.

5 Training

All employees shall receive training and explanation of the contents of the Operations Manual as described in the *Training Plan, MP-04*.

6 Operating Manual Constituent Documents, by type

6.1 Management Plans (MP)

Plan documents are management documents that establish and define procedures and operating practices. These are written in a narrative or report format and are the primary organizational documents for this Facility. All other controlled documents support the Management Plans.

Doc. No	Doc. Name	Description
MP-01	Operating Manual (Plan)	Master group of controlled documents
MP-02	Basis of Design / Engineering Report	Describes how the plant is designed to operate
MP-03	Staffing Plan and Job Descriptions	Describes all required staff positions, by title, which are responsible for the operation, maintenance, and control of the facility.
MP-04	Training Plan	Describes who will receive training, how often, on what topics.
MP-05	Closure Plan	Describes how the facility can be decommissioned.
MP-06	Emergency Response Plan (*Contingency Plan*)	Considers abnormal operating scenarios.
MP-07	Financial Assurance Plan	Estimated maximum cost to prematurely close the facility based on required steps from the Closure Plan and evidence of Financial Assurance to cover the full closure cost.
MP-08	Odor Control Plan	Steps to mitigate and control nuisance odors.
MP-09	Odor Monitoring and Surveillance Plan	Describes how Green Era will monitor the site for odorous air emissions and quantify the odor when detected.
MP-10	Waste Control Plan	Describes acceptance protocols for organic food waste, monitoring and detection steps to assure unauthorized waste is not accepted and processed, and segregation and disposition procedures for different classes of unauthorized waste when detected.
MP-11	Health and Safety Plan	Describes the policies to protect the health and safety of Green Era employees and visitors.
MP-12	Fugitive Dust Operating Program	Describes the controls and best management practices to be implemented by the facility to control fugitive dust.

6.2 Drawings – (DWG)

Engineering documents and record drawings of the facility and equipment Drawing Sets are saved to Green Era's cloud storage. Individual drawings are not indexed here.

Doc. No	Doc. Name	Date Issued	Description
DWG-IFC-BUILDING	Issued for Construction – Building and site		
DWG-IFC-PROCESS	Issued for Construction – Process equipment		
DWG-P&ID	Process and Instrumentation Drawings		
DWG-PFD	Process Flow Diagram		Includes Mass Balance
DWG – Schematics	Varies by cabinet name		Electrical Schematics for each process cabinet will be saved to the cloud storage.
DWG – Vendor Submittals	Varies by mfg.		Any equipment or machine specific submittal reference drawings are organized by equipment P&ID name in the equipment spec folders.

6.3 Forms – (FORM)

Documents used to collect and record information in a consistent manner.

Doc. No	Doc. Name	Description
FORM-21-001	Feedstock Manifest	Traveling paperwork for any feedstock loads delivered to the facility.
FORM-21-002	Confined Space Entry Permit	Checklist and procedures for planning and documenting work performed in a confined space that requires a permit per OSHA regulations.
FORM-21-003	Odor Observation Form	Documentation of daily odor observations at the Facility.
FORM-21-004	Odor Complaint Form	Documentation of any Odor Complaints that are received.
FORM-21-005	Cake Solids Outbound Manifest	Traveling paperwork for each truckload of cake solids leaving the facility.
FORM-21-006	Waste Outbound Manifest	Traveling paperwork for each truckload of packaging waste leaving the facility for landfill, recycling, or incineration.
FORM-21-007	Waste Generator Survey	Characterization of a waste stream that is being evaluated for suitability as a feedstock.
FORM-21-008	8D Correction Action Worksheet	Problem solving procedure for addressing issues in a systematic format and documenting the process and findings.

6.4 Lists – (LIST)

A special type of form document that is used to enumerate items within a defined category

Doc. No	Doc. Name	Description
LIST-21-001	Approved Customer List	Approved customers including haulers and waste generators. (any entity that is invoiced by Green Era)
LIST-21-002	Approved Feedstock List	Approved feedstocks by customer
LIST-21-003	Employee List	List of current and past employees
LIST-21-004	Equipment Lists (Workbook)	Master Equipment List, by P&ID tag, cabinet, device type. Excel workbook with multiple worksheets. Intended for electronic look-up only, not for printing.

6.5 Logs – (LOG)

A special type of form document that is used to record data from specific events

Doc. No	Doc. Name	Description
LOG-21-001	Training Log	Form for recording when employees have received job training with a description of the information that was reviewed.
LOG-21-002	Feedstock Manifest Log	Form to track all feedstock loads received by the facility, by week.
LOG-21-003	Cake Manifest Log	Form to track all cake solids loads leaving the facility, by week.
LOG-21-004	Waste Manifest Log	Form to track all packaging waste loads leaving the facility, by week.
LOG-21-005	Odor Complaint Log	Tracking list of all odor complaints.
LOG-21-006	Unauthorized Waste Log	Tracking list of any discovered unauthorized waste and its disposition.
LOG-21-007	Air Emissions Methane Venting Log	Tracking list of any times when methane was directly vented (uncontrolled).
LOG-21-008	Air Emissions Control Equipment Maintenance/breakdown Log	Tracking list of any times when air emissions equipment is offline or operating with reduced capacity.

6.6 Permits – (PERMIT)

Any issued permit for operation of the Facility by a regulatory body

Doc. No	Doc. Name	Date Issued	Description
PERMIT-21-001	Air Facility Permit	Pending	Issued by IEPA
PERMIT-21-002	Solid Waste Composting Facility Permit	Pending	Issued by IEPA
PERMIT-21-003	Liquid Waste Management Facility Permit	Pending	Issued by CDPH
PERMIT-21-004	Recycling Permit	Pending	Issued by CDPH
PERMIT-21-005	Air Facility Permit	Pending	Issued by CDPH
PERMIT-21-006	Wastewater discharge Permit	Pending	Issued by MWRD
PERMIT-21-007	Zoning – Special Use, planned development	4/10/2019	Issued by Chicago
PERMIT-21-008	Boiler Inspection	Pending	State boiler inspection certificate
PERMIT-21-009	Fire	Pending	Annual fire inspection certificate, Chicago

6.7 Specification, Equipment (ES-X-RY)

(ES-X-RY, where X is the P&ID tag name and Y is the revision level) – document defining specific requirements or characteristics of equipment.

Equipment specs are saved in a directory folder structure in Green Era's cloud storage by P&ID drawing number. O&M manuals, submittal drawings, vendor information, and vendor specs are saved in the same directory for access by Green Era Personnel.

6.8 Standard Operating Procedures - (SOP)

Detailed work instructions and procedures to accomplish specific tasks.

Doc. No	Doc. Name	Description
SOP-21-001	Spill Contingency	Methods for responding to spill, mitigating the impact, clean-up, recordkeeping, and notification.
SOP-21-002	Sewer Spill and Prevention	Methods for preventing unintended discharges to the Chicago sewer and for responding to a spill that has entered the combined sanitary and stormwater sewer system through a floor drain, manhole, or pipe and may impact the receiving Chicago wastewater treatment facility.
SOP-21-003	Lockout/Tagout	Safety procedures for Lockout/Tagout of equipment.
SOP-21-004	Confined Space Entry	Procedures for performing work safely in confined spaces.
SOP-21-005	Not assigned	
SOP-21-006	Feedstock Acceptance Guidelines	Summary of acceptable wastes for customers and plant operators
SOP-21-007	Feedstock Manifest Recordkeeping	Outlines information requirements for waste manifests and procedures for reconciliation.
SOP-21-008	Feedstock Manifest workflow	One-page workflow document for plant operations staff.

GREEN ERA SUSTAINABILITY, LLC

ENGINEERING REPORT

BASIS OF DESIGN

DOC. NO. MP-02

FOR PROPOSED FACILITY AT
650 W 83RD STREET
CHICAGO, ILLINOIS 60620

LAST REVISION: OCTOBER 4, 2021

PREPARED BY:
GREEN ARROW ENGINEERING
2759 LONG ROAD
WOOSTER, OHIO 44691

REVISION LEVEL	DESCRIPTION	DATE
R3	WORKING COPY	4/19/18
R4	INCORPORATED RV AND JK COMMENTS/EDITS, ADDED PERMIT SUMMARY TABLES	7/21/18
R5	REVISED 1.1 AND OPERATIONAL RECEIVING AND PROCESSING (SECT. 4)	8/21/18
R6	EXPANDED SECTION 4, ADDED SECT 5 TO 14, AND CLEARED REVISION TRACKING	10/6/19
R7	INCORPORATES COMMENTS/REV. FROM MKB/ACE. ADDED STAFFING DISCUSSION.	10/14/19
R8	ADDED TABLE OF FIGURES, ADDED LIST OF TABLES, ADDED TABLE OF ACRONYMS 1.1 PROJECT DESCRIPTION: UPDATED TANK SIZES, TRAFFIC DISCUSSION AND ODOR MGMT NON-PUMPABLE WASTE TIPPING, SECTION 4.2, ADDED DOOR NO. AND ADDED THREE FIGURES PUMPABLE WASTE RECEIVING, SECTION 4.3, ADDED TANK AND DOOR NUMBERS LIVE BOTTOM BUNKER SECTION 4.4, AND SEPARATION MILLS SECTION 4.5. CHANGED TO REFLECT ONE MILL AND ONE BUNKER FOR PHASE I. GAS STORAGE, SECT. 6.1, REVISED FOR SCHUMANN TANK PRESSURE SETTTINGS. TANK INSULATION, SECT. 6.2, NEW SECTION REVISED HEATING DISCUSSION, SECT. 7.1 FOR INSITU TANK HEATING AND THERMOPHILIC OPERATION BOILERS, SECT 7.3, ADDED BASIC EQUIPMENT DESCRIPTION. PUMPS, SECT. 8, EXPANDED WITH ADDITIONAL INFO POST DIG. SCREENING, SECT. 9 CHANGED FROM VIBRATORY SCREEN TO SCREW PRESS POST-DIGESTION SCREENING: ADDED FIGURES 9-1 AND 9-2 WITH ADDITIONAL PROCESS DECRIPTION	08/23/21

	DEWATERING, SECT. 10, REVISED TO MATCH MASS BALANCE FOR PHASE I. TABLE 11-1, TYP. NUTRIENT CONC. ADJUSTED FOR FILTRATE QUALITY ADDED PLANT CONTROL, SECT 14 ADDED COMMISSIONING PLAN. SECT. 15. 16.1.1.3.3 TANK TEMPERATURE REVISED FOR THERMOPHILIC OPERATION	
R9	ADDED SUBTITLE "BASIS OF DESIGN". ASSIGNED DOCUMENT NUMBER AS MP-02. REMOVED STAFFING PLAN AND JOB DESCRIPTIONS SINCE IT WILL BE MAINTAINED AS A STAND-ALONE PLAN.	10/04/21
R10	DEFINED "NON-DIGESTIBLE MATERIAL" IN SECTION 3 FOR CONSISTENCY WITH THE OTHER MANAGEMENT PLANS. UPDATED TABLE OF CONTENTS AND LINKED REFERENCES.	10/25/21

Table of Contents

1 Executive Summary 1
1.1 Project Description 1
2 Permitting Overview – Confirm with agencies 4
2.1 Solid Waste Permit 4
2.2 Air Permit 4
2.3 Storm Water Pollution Prevention Plan (SWPPP) 4
2.4 Environmental Impact Statement 4
2.5 Sewer Discharge Permit 5
2.6 Water Tap Permit 5
2.7 Site Plan Approval 5
2.8 Building Dept. Approvals 5
2.9 Fire Marshall Approval 6
2.10 Permitting summary tables 6
3 Food Waste Characterization 7
3.1 Type, Quality, and Non-digestible material 7
3.1.1 Training and outreach to assure quality 9
3.2 Quantity 10
3.3 Service Area 10
3.4 References 11
4 Feedstock Receiving and Organics Separation 12
4.1 Truck traffic Patterns and Queuing 12
4.2 Non-pumpable waste tipping 12
4.3 Pumpable Waste Receiving 15
4.4 Live Bottom Bunker 15
4.5 Separation Mill 15
4.6 Grit Separation 18
5 Feedstock\Biomass Equalization Tank 18
6 Digester Tank with rigid roof 19
6.1 Gas storage and pressure management 19
6.2 Tank Insulation 20
7 Heating and Dosing 22
7.1 Heating 22
7.2 Dosing / Feeding 22

7.3 Boilers....23
8 Pumps....24
9 Post-digestion screening....25
10 Dewatering....26
10.1 Polymer Chemistry....26
10.2 Dewatering Process Description....27
10.3 Cake Solids Handling....28
10.4 Filtrate Capture....28
10.5 Polymer and Grey Water Usage....29
11 Filtrate quality....30
12 Biogas Separation and Sweetening....31
12.1.1 Technology and Proposed Equipment Description....31
12.1.2 PSA PROCESS STEPS....32
12.1.3 Reference Facilities....33
13 Flare....33
14 Plant Control....33
15 Commissioning....35
15.1 Anaerobic System, Biological Commissioing....35
15.2 Feedstock Sorting / Pre-processing....37
15.3 Dewatering....38
15.4 General Equipment and Process Commissioning Procedure....38
16 Operational Monitoring....39
16.1 Anaerobic Process Monitoring....40
16.1.1 Microbiology....40
16.1.2 AD Process Monitoring Parameters....44
16.2 References....53

List of Tables

Table 2-1: Air Basin Site Air Pollutant Limits....4
Table 2-2: IEPA Permit Responsibility....6
Table 2-3: City of Chicago Permit Responsibility....7
Table 2-4: Metropolitan Water Reclamation District of Greater Chicago (MWRD) Permit Responsibility....7
Table 3-1: Typical Feedstock Parameter Ranges See end of section (3.4) for references....9
Table 3-2: Feedstock quantity by type. *See prior section for category definitions....10
Table 10-1: Dewatering Capacity Summary....30
Table 11-1: Typical Nutrient Concentrations....30
Table 12-1: Biogas Upgrading Reference Facilities....33
Table 15-1: Seed Digestate Transportation Time....36
Table 15-2: Digestate and Feedstock Volume during Commissioning....37
Table 16-1: Nutrient Requirements for Anaerobic Digestion....44
Table 16-2: Testing Frequency of Selected Parameters....48
Table 16-3: Process Parameter Limits....52

Table of Figures

Figure 1-1: Area Map....1
Figure 1-2: Typical bolted steel digester tanks prior to insulation. Barcelona, Spain (Courtesy of Tank Connection). 2
Figure 1-3: Simplified Process Map....3
Figure 3-1: Example SSO collection tote at a farmer's market (Total Organics St Louis)....8
Figure 3-2: Regional Map....11
Figure 4-1: Top down view of feedstock reception area....13
Figure 4-2: Perspective view of a truck tipping non-pumpable food waste into reception bunker.....14
Figure 4-3: Perspective view of feedstock reception bunker from the screening platform....14
Figure 4-4: Food waste with packaging prior to separation (Innsbruck, Austria)....16
Figure 4-5: Pulped food waste with broom handle to show slump....16
Figure 4-6: Separated packaging in hopper (Innsbruck, Austria)....17
Figure 4-7: Close-up of separated packaging (Innsbruck, Austria)....17
Figure 6-1: Typical bolted steel digester tanks prior to insulation....20
Figure 6-2: Composite Aluminum and Insulation Board Cladding Panels....20
Figure 6-3: Clip and Tie Wire back to cable....20
Figure 6-4: Cutaway illustration of tank cladding panel....21
Figure 6-5: Mechanical Seamer....21
Figure 6-6: Typical completed siding after installation....21
Figure 8-1: Seepex pump with 'Smart Stator'....24
Figure 8-2: Cross-section of Seepex pump rotor and stator....24
Figure 9-1: Huber Strainpress sectioned illustration....25
Figure 9-2: Huber Strainpress Installation example....25
Figure 10-1: Filtrate samples after jar testing different polymers....27
Figure 10-2: Thickened digestate at the end of the gravity belt conveyor bed on a Charter Belt Press....28
Figure 12-1: PSA gas upgrading equipment process flow diagram....32
Figure 14-1: Feedstock Heating and Dosing SCADA control screen example....35
Figure 16-1: Digestion Process....41

Table of Acronyms

Acronym	Definition
AC	Alternating Current (electric)
ACR	Air Change Rates
AD	Anaerobic Digester
BMP	Biomethane Potential
BOD	Biochemical Oxygen Demand
BTU	British Thermal Unit
C	Degrees Centigrade (Degrees Celsius)
CAN	Controller Area Network (industrial communications protocol)
C&D	Construction and Demolition
CFM	Cubic Feet per Minute
CFR	Code of Federal Regulations
CH_4	Methane
CHG/HR	Changes per Hour
CHP	Combined Heat and Power
CIP	Clean-in-place
CNC	Computer Numerical Controlled
CO	Carbon Monoxide
CO_2	Carbon Dioxide
COD	Chemical Oxygen Demand
Co-gen	Co-generation
CPR	Cardiopulmonary Resuscitation
CY	Cubic Yards
dBA	Decibels (A-weighted)
DC	Direct Current (electric)
DOB	Department of Building (Chicago)
DPD	Department of Planning and Development (Chicago)
EPA	Environmental Protection Agency
F	Degrees Fahrenheit
$FeCl_3$	Ferric Chloride (III)
FOG	Fats, Oils, and Greases
FTE	Full-time Equivalent
GAE	Green Arrow Engineering, LLC
GPM	Gallons per Minute
GPH	Gallons per Hour
H_2S	Hydrogen Sulfide Gas
H_2SO_4	Sulfuric Acid
HCHO	Formaldehyde
HP	Horsepower
HR	Hour
HRT	Hydraulic Retention Time
HVAC	Heating Ventilation and Air Conditioning
IEPA	Illinois Environmental Protection Agency

Acronym	Definition
I/O	Input Output
kGAL	kilo-gallon
KPI	Key Process Indicators
kV	kiloVolt
kW	kilowatt
kwH	kilowatt-hour
LED	Light-emitting Diode
LLC	Limited Liability Corporation
MCC	Motor Control Centers
MMBTU	1 Million BTU
MMSCFD	1 Million Standard Cubic Feet Per Day
MPH	Miles Per Hour
MWRD	Metropolitan Water Reclamation District (of Greater Chicago)
NIR	near-infrared
NMEHC	Non-methane, non-ethane hydrocarbons
NOx	Nitrous Oxides
NPDES	National Pollutant Discharge Elimination System
NWI	National Wetland Inventory
OLR	Organic Loading Rate
ORP	Oxidation Reduction Potential
OSHA	Occupational Safety and Health Agency
PC	Personal Computer or Progressive Cavity (pump)
PFD	Process Flow Diagrams (drawings)
PFMEA	Process Failure Mode Effect Analysis
PID	Photo-Ionization Device
P&ID	Process and Instrumentation Drawings
PLC	Programmable Logic Controller
PPE	Personal Protective Equipment
PPM	Parts per Million
PPMV	Parts per Million by Volume
PRV	Pressure Relief Valves
PSA	Pressure Swing Adsorption
PSIG	Pounds per Square Inch
QA/QC	Quality Assurance/Quality Control
RDF	Refuse-Derived Fuel
RNG	Renewable Natural Gas
RTU	Remote Terminal Unit
SCADA	Supervisory Control and Data Acquisition
SCF	Standard Cubic Feet
SCFH	Standard Cubic Feet per Hour
SCFM	Standard Cubic Feet per Minute
SCR	Selective Catalytic Reduction (emissions control process)

Acronym	Definition
SOP	Standard Operating Procedures
SPDES	State Pollutant Discharge Elimination System
SSO	Source-separated Organics
SSOW	Source-separated organic waste
SWPPP	Stormwater Pollution Prevention Plan
TCL	Target Compound List
TCP/IP	Transmission Control Protocol / Internet Protocol
TIC	Total Inorganic Carbon
TKN	Total Kjeldahl Nitrogen
TP	Total Phosphorus
TS	Total Solids
TSDF	Treatment, Storage and Disposal Facility
TSS	Total Suspended Solids
UPS	uninterrupted power supply
USEPA	United States Environmental Protection Agency
V	Volt
VFA	Volatile Fatty Acids
VFA/TIC	Alkalinity Ratio
VOC	Volatile Organic Compounds
VS	Volatile Solids
W/W	Concentration by weight
WWTP	Wastewater Treatment Plant
XLPE	Crosslinked Polyethylene

1 EXECUTIVE SUMMARY

1.1 PROJECT DESCRIPTION

Green Era Sustainability, LLC (Green Era) proposes to construct and operate an 80,000 ton per year food waste recycling facility in the Auburn Park neighborhood on Chicago's south side, along the I-94 corridor. The facility will receive food waste from food processors (dairies, bakeries, potato chip plants, etc.), grocery stores, and restaurants in the Chicago metro-area and will also be equipped to accept source-separated bagged kitchen waste from neighborhood curbside collection programs. Packaging will be automatically separated from the food waste and will be sent off-site for either recycling or disposal. The pulped organic fraction will be treated with a conventional wet anaerobic digester system. The remaining plant fiber and solids will be separated after digestion and used by *Urban Growers Collective* as soil amendment (compost) for their community based urban farming sites in Chicago. Water will be discharged by the recycling facility and treated by the *Metropolitan Water Reclamation District of Greater Chicago (MWRD)* at the *Stickney Water Reclamation* facility. Methane gas that is produced during anaerobic digestion of the food waste will be treated to natural gas standards and injected into the local natural gas pipeline that is owned by Peoples Gas. The gas produced by this process is typically referred to as renewable natural gas (RNG) and is eligible for renewable energy credits.

Green Era plans to develop an 8.905± acre vacant parcel that is currently zoned for manufacturing use. Phase I development will consist of a 35,000± square foot processing building, one 1.68 million gallon gas tight liquid holding tank (approx. 75.66 feet in diameter by 53 feet sidewall height), and one 320,000 gallon gas tight liquid holding tank (approx. 33.63 feet in diameter by 53 feet sidewall height), and a skid mounted outdoor biomethane processing equipment.

Traffic will enter and exit the site from S. Wallace Street.

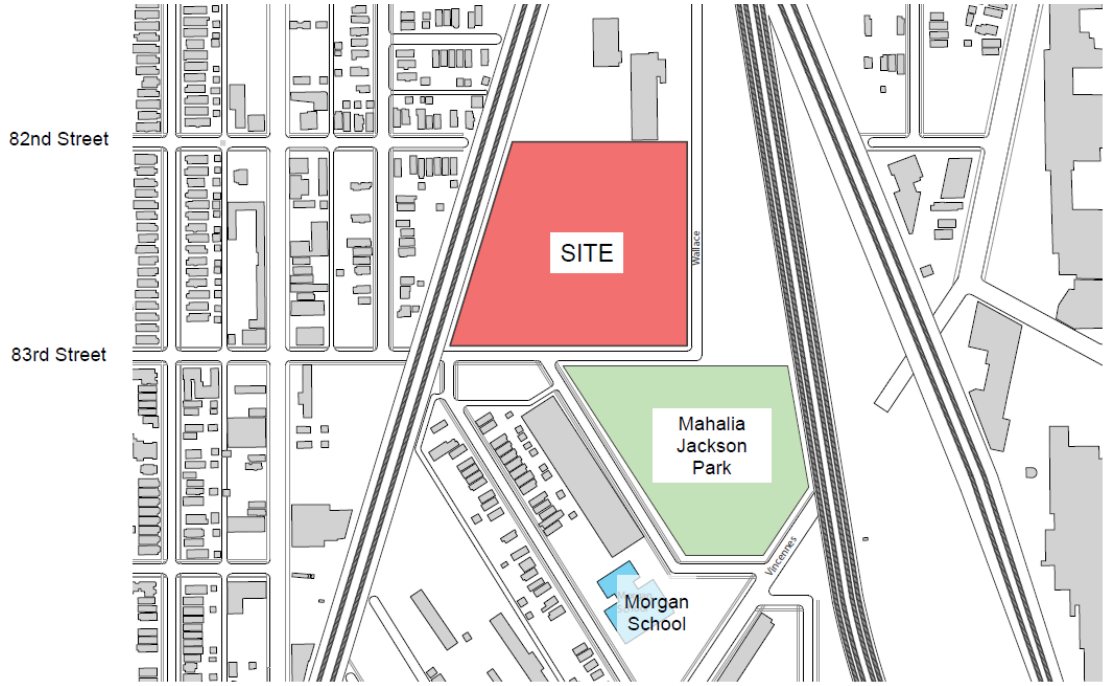

Figure 1-1: Area Map

The facility will be staffed 24/7. The facility will receive 5 to 8 trucks per day delivering pumpable food wastes in tankers (averaging 13 tons per truck) and 8 to 16 loads per day of source separated food waste in compactors, roll-

off containers, or 40 foot long dump trailers (averaging 12 tons per load). The facility will remove 1 to 2 compactors a day of food waste packaging and grit to the landfill. Additionally, 2 semi-loads per day of soil amendment (cake solids) will be transported to *Urban Growers Collective* or other regional composters.

The facility will directly employee 8 to 12 people, with 4 to 8 persons working on first shift.

All feedstock receiving, material processing, including truck unloading/loading will be conducted in the enclosed processing building. The building will be maintained at a slight negative air pressure and ventilation air will be treated through an ionization reactor and an activated carbon guard bed. Fully treated exhaust air will be discharged to a stack. Air ionizer units within the building will provide in-situ treatment of the odor causing compounds. The facility will maintain an *Odor Management Plan* that identifies potential odor sources, mitigation measures, control points - along with an employee awareness and training program.

Overhead doors to the tipping floor will only be opened while a vehicle is passing through the threshold. The doors will be automatically opened and closed with vehicle sensors.

Sound pressure levels will be limited to 65 dBa at 50 feet from the exterior of the facilities. Sound pressure levels at property lines will be limited to 50 dBa from 10 PM to 6 AM.

Site lighting will be limited to parking, driveway, and building entrances. The yard area will be lit by building sconces or low level down lighting at stairs and access points when required for maintenance.

Figure 1-2: Typical bolted steel digester tanks prior to insulation. Barcelona, Spain (Courtesy of Tank Connection).

Green Era's tanks will be clad with white aluminum standing-seam insulation panels.

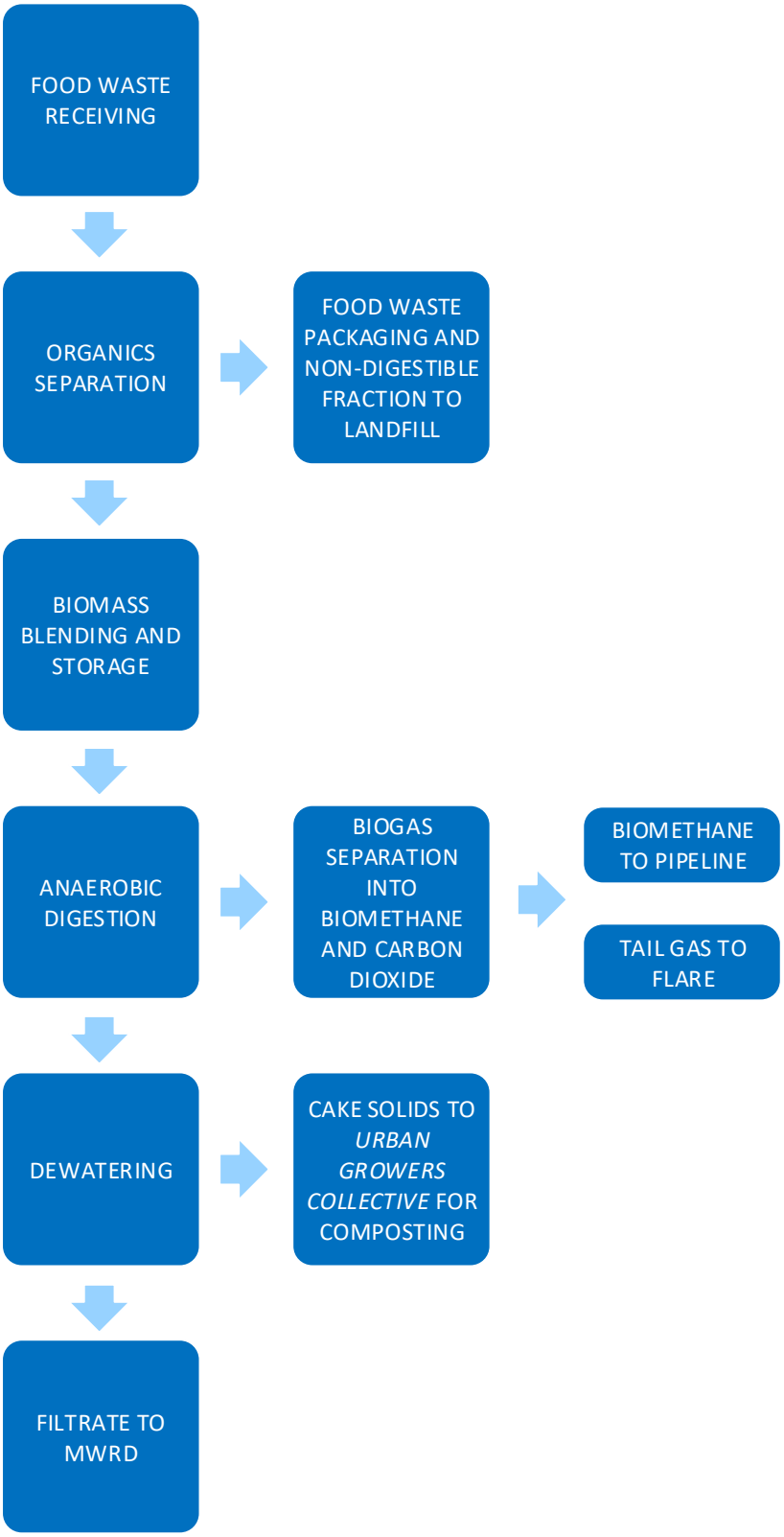

Figure 1-3: Simplified Process Map

2 PERMITTING OVERVIEW

2.1 SOLID WASTE PERMIT

The proposed organic waste recycling facility is subject to regulatory review and approval by the Illinois Environmental Protection Agency (IEPA) per title 35, subparts 807 and 830 governing solid waste and composting facilities. Initial review and comments from IEPA can statutorily take 90 business days. The City of Chicago Department of Public Health additionally requires a recycling permit. Green Arrow recommends allowing for a minimum of 6 months to receive final permits to install to provide time to address agency comments and for their further review and acceptance. IEPA will also issue a permit-to-operate (PTO) after Professional Engineer certification that the facility was constructed as designed and after an IEPA inspection of the final constructed facility. The agency has 45 business days to review and accept or issue comments on the final PTO. The PTO will authorize the facility to receive and process waste. The solid waste permit will also entail certain siting requirements (believed to include a 150-ft setback requirement from nearest residences) in addition to local code.

2.2 AIR PERMIT

The facility will be required to permit any emission sources for the facility. The permit process includes submission of applications to both the IEPA and the City of Chicago Department of Public Health. Emission sources include natural gas fired boilers, biogas flares, and a thermal oxidizer for tail gas from gas separation equipment. Some of these sources may be exempt or fall below threshold levels that would require annual reporting. The total emissions of controlled pollutants from all contributing sources on the site may not exceed the limits for the local air basin.

Maximum Tons Per Year		Pollutant
40	NOx	Oxides of nitrogen
100	CO	Carbon Monoxide
40	SOx	Oxides of sulfur

Table 2-1: Air Basin Site Air Pollutant Limits

The agency may also choose to delineate all potential emission points from pressure relief valves on tanks or pipes and odorous air scrubber exhausts, although this would be at agency discretion and is not federally mandated.

Construction may not start until the project has an air permit.

2.3 STORM WATER POLLUTION PREVENTION PLAN (SWPPP)

The project must apply for a SWPPP under the state blanket NPDES permit for construction activities disturbing more than 1 acre. The project will need to apply for and receive coverage under IEPA NPDES permit prior to breaking ground. Local siting and planning may approve the SWPPP for the State.

2.4 ENVIRONMENTAL IMPACT STATEMENT

No environmental impact statement will be required for the proposed facility and construction with IEPA.

2.5 SEWER DISCHARGE PERMIT

The receiving wastewater utility will be the Metropolitan Water Reclamation District of Greater Chicago (MWRD). As a 'Significant Industrial User,' the project will need to submit a Discharge Authorization Request providing them with a wastewater profile for volume and nutrients and details regarding any proposed pretreatment prior to discharge. If there is pretreatment prior to discharge, construction permit applications will also need to be submitted to the IEPA Division of Water Pollution Control, and the operation of the pretreatment system will need to be under the supervision of a certified pretreatment operator (certification can be obtained on a site-specific basis via examination with the State). The MWRD will require a discharge flow volume measuring device and composite sampler. MWRD will issue the project a discharge authorization to connect to the sewer system. Periodic discharge sampling and lab analysis and reporting will be required by the MWRD. The MWRD will levy a user charge based on flow volume, and the mass discharge quantities of Biochemical Oxidant Demand (BOD), and Total Suspended Solids (TSS). Unless the discharge is directly to an MWRD sewer line (unlikely), a City of Chicago sewer permit will also be required to allow conveyance of the discharge through the City of Chicago sewers before it connects to the MWRD sewer system.

2.6 WATER TAP PERMIT

The local water utility will likely require a capacity test for the water supply pressure and volume available at the location. These test results will be needed for the fire loop engineering and may be part of the building permit approval checklist or the local site plan approval.

2.7 SITE PLAN APPROVAL

The local zoning and planning board will need to approve the site plan and proposed development. Per discussions with City of Chicago Department of Public Health, the applicable code regarding setbacks is:

> ***17-9-0117-A Waste-Related Uses, Recycling Facilities, and Mining/Excavation Uses.*** *Buildings, storage areas and work areas on the site of all waste-related uses, Class III, Class IVB, and Class V Recycling Facilities, and mining/excavation uses must be located at least 150 feet from all R zoning district boundaries, provided that landfills, hazardous waste disposal/storage, and windrow composting facilities must be located at least 660 feet from R zoning district boundaries.*

Conformance with these requirements will be evaluated by the City of Chicago in their review of the recycling permit application discussed earlier in Section 2.1.

The City of Chicago/Department of Planning and Development (DPD) approved the site plan and proposed development through the Plan Development process in April of 2019. This process required community meetings and interfacing with DPD, the alderman, and the lead community organization. Green Era met numerous times with DPD, Alderman Brookins, and the Greater Auburn-Gresham Development Corporation to review the progress of the project development. The evidence and documentation requirements for this permit should be outlined here. Local code and zoning will govern setbacks, parking requirements, site lighting, landscaping, structure height, and signage. A preliminary truck route was included in the Plan Development submission.

2.8 BUILDING DEPT. APPROVALS

Final construction/permit documents will be submitted to the City of Chicago/Department of Buildings (DOB) to confirm compliance with building codes governing site and building design. A preliminary project introduction and review meeting occurred in October 2017 with numerous city department representatives including fire prevention, water, sewer, storm water, environment, and DOB. A preliminary permit submission meeting with DOB Commissioner Judith Frydland also took place on September 17, 2019. Ninety (90) to one-hundred and

twenty (120) days should be allowed for DOB plan review, comments, and any necessary revisions. In addition, the submission for final Zoning approval will occur by the end of October.

2.9 FIRE MARSHALL APPROVAL

The local fire marshal will determine compliance with local, state, and federal fire code and life safety rules. Ninety (90) days should be allowed for fire department plan review, comments, and any necessary revisions. The Bureau of Fire Prevention will be included in the final DOB review process. John Javorka, Chief Fire Prevention Engineer reviewed and preliminarily approved the project documents that were submitted in the Plan Development process.

2.10 PERMITTING SUMMARY TABLES

Illinois EPA (IEPA)	Approvals/Permits	Requirements/Evidence/Process
Air Bureau	Air Facility Permit	Provide detail of all emission sources and their potential to emit. Combustion devices such as boilers, waste-gas-burners (flares), and stationary engines would be subject to review. Emission control devices such as odor scrubbers will also need to be included.
Solid Waste	Solid Waste Permit for AD, TITLE 35 SUBPART 807/830	Engineering report that includes mass balance, energy balance, process flow diagrams, major equipment specs, and process narrative description.
	PTO – permit to operate	Issued after major construction completion and inspection by agency for compliance with applicable permit conditions.
Div. of Water Pollution Control	General NPDES permit for stormwater discharges from construction ILR10 (SWPPP)	
	WPC-PS-1, permit application required if pretreatment equipment is installed for the process filtrate.	Pretreatment is not being conducted, and as such, no WPC-PS-1 permit is required.

Table 2-2: IEPA Permit Responsibility

Commer
Water Pol

Commer
as "produ
producing

City of Chicago Department	Approvals/Permits	Requirements/Evidence/Process
Dept. of Planning (DOP)	Site Plan Approval by Plan Development Process. Assure compliance with parking, green space, landscaping, signage, lighting, setbacks, and height.	Requires public meeting. Will a traffic study be required?
Dept. of Building (DOB)	Building Permit. Review of architectural, structural, mechanical, plumbing, and electrical plans for code compliance	Plans must be marked as 'Issued for Construction' or 'Approved for Construction'
Fire Prevention	Review of plans by bldg. use designations for egress routes, emergency lighting, sprinkler design, bldg. material flammability, and alarm/notification systems. Site plan review for hydrants and access.	
Stormwater	Review of SWPP for compliance with City regs.	
Sewer	Sewer use permit. (Discharge to City maintained local sewer lateral as conduit to MWRD sewer main)	
Water	Water tap connection/capacity study	
Environment	None.	
Dept. of Public Health	Recycling Permit and Liquid Waste Handling Facility Permit	

Table 2-3: City of Chicago Permit Responsibility

MWRD	Approvals/Permits	Requirements/Evidence/Process
Industrial Waste Division	Discharge Authorization Permit	Complete a Discharge Authorization Request Form RD-118. Requires process description, facility drawings, flow diagrams, etc… Determine if flow equalization will be required.

Table 2-4: Metropolitan Water Reclamation District of Greater Chicago (MWRD) Permit Responsibility

3 FOOD WASTE CHARACTERIZATION

3.1 TYPE, QUALITY, AND NON-DIGESTIBLE MATERIALS

Source-separated food waste is any food waste that has been pre-sorted from other waste by the customer or waste generator. Usually this term specifically refers to curbside collected household kitchen waste, restaurant waste, and grocery store waste, where a person physically handled the material and consciously separated the organics from other waste. The volume of non-digestible material (which from an operational point of view is

undesirable “contamination”, but hereafter will be described as “non-digestible material”), such as plastic bags and food packaging, can vary widely depending on the collection methods and generator. Haulers will generally provide dedicated totes, dumpsters, or compactors for food waste collected from homes or businesses.

Figure 3-1: Example SSO collection tote at a farmer’s market (Total Organics St Louis)

Food waste generated by commercial food processors is also a type of source separated waste, since it is also kept separate from other types of waste. Commercial food processors often have multiple discrete sources of bulk waste organics with low levels of non-digestible material. Types of businesses in this category include commercial bakeries, canners, brewers, snack food fryers, pasta companies, dairies, and meat packers. Pet food manufacturers also produce waste that would be suitable for anaerobic digestion. Prior to accepting bulk waste from any commercial food processors, Green Era will complete a waste characterization with the generator that includes a description of the process that generates the waste, the typical quantity, handling characteristics, odor profile, transportation options, and characteristic energy and nutrient values based on laboratory analysis. A large fraction of available commercial food waste is pumpable and will be hauled in closed tankers. Examples of pumpable commercial food waste include wash/rinse water from cleaning tanks and trailers that handle food products and ingredients, whey, liquid ice cream mix, end of batch soups, sauces and syrups, and separated and thickened scum and solids from food processing wash water. Other non-pumpable food waste may be transported in compactors or tarped dump trailers.

Packaged food waste may also be processed by this facility. Packaged food waste is any organic food waste that is contained within consumer packaging. Examples of packaged waste include beverages or soup in cans, milk or juices in plastic jugs, bottles or cartons, and single serving condiment packs. This type of food waste is usually generated because of product changeover on a packaging line, mislabeling, underfills/overfills, failed quality checks, past sell-by date product, damaged containers, and recalled product. At the facility, the packaging will automatically be separated from the organic product by a separation mill, which is a specialized type of hammermill built for this application.

Fats, oils, and grease (FOG) will also be accepted. This type of pumpable waste is collected from grease traps at restaurants and food processors. FOG waste is currently accepted by some municipal waste water treatment

facilities. Green Era will provide haulers with education materials on the collection of FOG for this facility. They will be prohibited from collecting and mixing grease trap waste from car washes, car garages, industrial customers, or from other non-food processing establishments.

	TS (%)	VS (%)	COD (mg/l)	pH	TKN (mg/L)
Source Separated Organics[1,3]	20 - 30	85 - 94	200,000 - 300,000	4 - 7	4000 - 9000
FOG (grease trap, not dewatered)[2]	2 - 5	88 - 92	20,000 - 70,000	4 - 5	500 - 1000
Pumpable Food waste	3 - 8	85 - 90	60,000 - 200,000	3 - 8	1500 - 2000
Mixture	12 - 14	88 - 90	125,000 - 200,000	3 - 5	2000 - 3000

Table 3-1: Typical Feedstock Parameter Ranges See end of section (3.4) for references.

Yard waste (tree trimmings, grass clippings, leaves) will not be accepted by this facility for digestion. Woody plant fiber (lignin) does not decompose in the digestion process.

Source-separated food waste will contain non-digestible materials such as plastic bags, food containers, and packaging products. Typical non-digestible material includes steel and aluminum cans, PET bottles, corrugated cardboard, plastic and stainless cutlery, disposable plates and trays, and all types of plastic containers. Food waste also contains bones and shells, fruit pits/seeds/hulls, sand, and grit that will not be decomposed by the digester. The feedstock as received is expected to contain up to 12% non-digestible material by weight, and average 7% non-digestible material across all waste streams, including grit. The processing system is designed to remove non-digestible material, typically food packaging and collection bags, from the received feedstocks prior to digestion. No municipal solid waste or unseparated household waste will be accepted by this facility.

The food waste will invariably contain some atypical gross non-digestible material (trash) that has been improperly disposed of by the generator. The facility will implement operating procedures for identifying, handling, and segregating unexpected items in a way that will not damage equipment and lead to unplanned downtime. Much of this type of non-digestible material can be limited by regularly educating the haulers and the generators on the acceptable types of waste and how the waste will be processed. Container labeling and controlling access to the waste dumpsters will also mitigate the level of unauthorized non-digestible material. Large bulky items can be identified by visual inspection and removed prior to processing, such as wooden pallets, old tires, or C&D debris. Waste loads that appear to have a large amount of gross non-digestible material may be rejected by the facility and sent to the landfill or alternatively dumped into a segregation area and manually sorted before loading into the waste receiving hoppers with a wheel loader.

3.1.1 TRAINING AND OUTREACH TO ASSURE QUALITY

The facility will develop a *Waste Control Plan (MP-10)* that defines the types of waste expected to be received, both authorized and unauthorized. Procedures for the handling, segregation, and disposition of any non-digestible material suspected of being household hazardous waste will be included in the *Waste Control Plan (MP-10)*. Plant employees will be trained how to identify unauthorized waste and how to safely and properly handle the material.

Generators will be pre-approved by Green Era or by an approved partnering hauler. Signs at the facility entrance will state “Registered Haulers Only.” An iconographic and captioned sign at the inbound truck scale will denote categories of prohibited wastes, including hazardous waste, medical waste, C&D, industrial waste, and septage/biosolids. Approved haulers will receive printed educational materials (leaflets and brochures) regarding acceptable and non-acceptable waste. The educational materials will be written for distribution to their drivers and customers (*SOP-21-006, Feedstock Acceptance Guidelines*). Green Era’s website will include printable PDFs of all education materials and further educational resources such as multimedia presentations and videos that will be

hosted on YouTube. The haulers will also receive instructions on tipping procedures at the facility, paperwork requirements, and general traffic flow. They will also receive maps showing approved arrival and departure routes. A list of alternate receiving facilities will be provided to the haulers in the case that the facility is closed or cannot accept waste for any reason.

Green Era will work closely with municipalities wishing to implement curbside or neighborhood organics and kitchen waste collection programs for households. Green Era will assist in developing educational materials and provide opportunities for facility tours and speaking engagements with community stakeholder groups.

3.2 QUANTITY

The facility can receive and treat 80,000 wet tons per year of food waste at an average of 7% non-digestible material by weight. The blended feedstock will average 12 - 14% total solids or 86 - 88% moisture.

The facility will receive about 100 tons per day of pumpable food waste during the week and 200 tons per day of non-pumpable source separated or packaged food waste. The composition of the feedstock blend may change over time dependent on market availability and tip fee.

Feedstock Type	**Annual Throughput**	**Daily Throughput (5-day avg.)**
Source Separated Organics*	50,000 tons/year	200 tons/day
Pumpable food waste (FOG)*	25,000 – 30,000 tons/year	100 tons/day (24,000 gallons/day)

*Table 3-2: Feedstock quantity by type. *See prior section for category definitions.*

3.3 SERVICE AREA

The facility will process waste from the greater Chicago metro region, largely Cook County, which at 5.2 million people is the second most populous county in the United States. The majority of waste processed at the facility is expected to be generated within a 30-mile radius of the facility. Although, it would not be uneconomical to transport bulk waste from commercial food processors within a 75-mile radius.

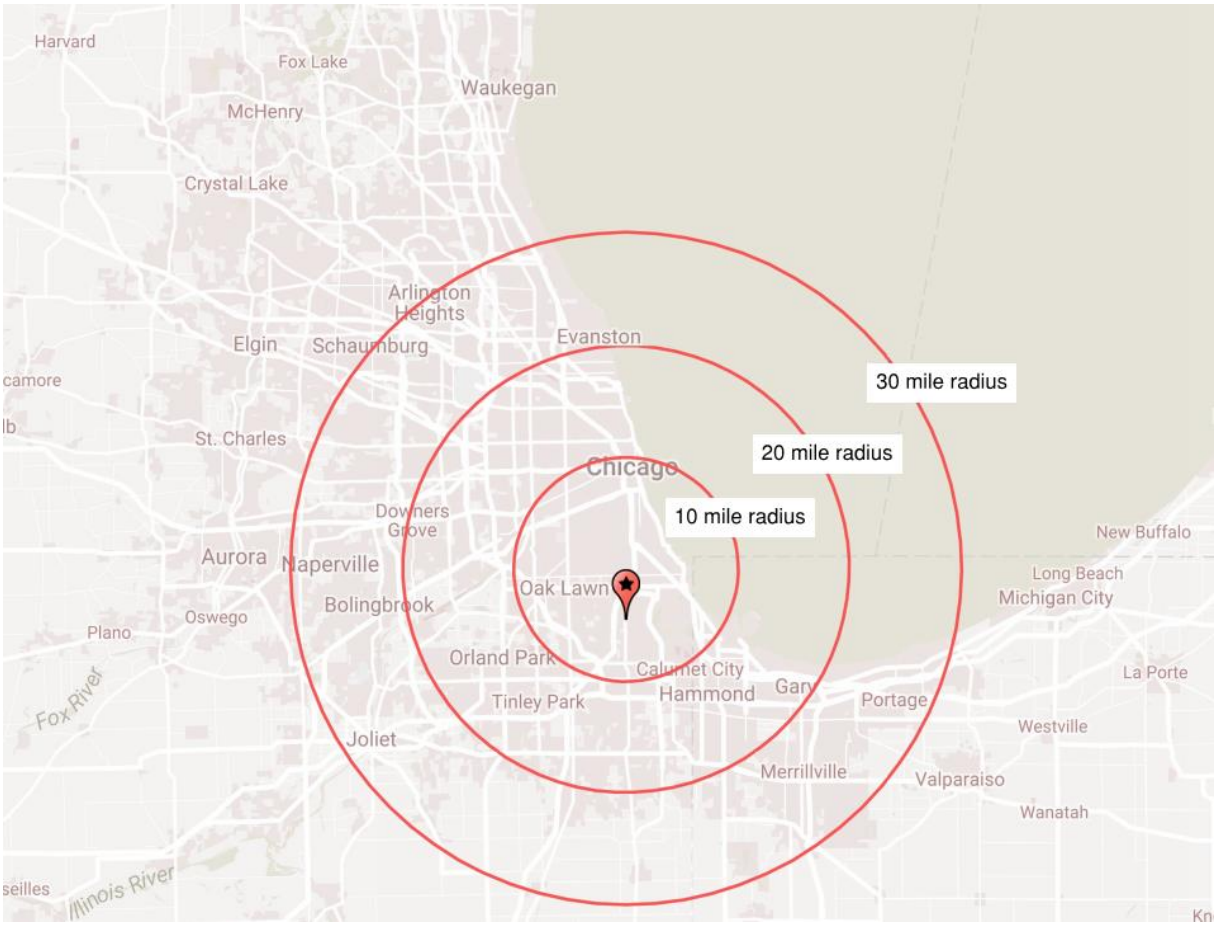

Figure 3-2: Regional Map

3.4 REFERENCES

1. Banks, C.J., Chesshire, M., Heaven, S. and Arnold, R. Anaerobic digestion of source-segregated domestic food waste: Performance assessment by mass and energy balance (2011). Bioresource Technology 102(2), 612-620. DOI: 10.1016/j.biortech.2010.08.005
2. Long, J.H., Aziz, T., De los Reyes, F., and Ducoste, J. (2012). Anaerobic co-digestion of fat, oil, and grease (FOG): A review of gas production and process limitations. Process Safety and Environmental Protection - PROCESS SAF ENVIRON PROT. 90. 10.1016/j.psep.2011.10.001.
3. Zhang, Lei, Yong-Woo Lee, Deokjin Jahng, Anaerobic co-digestion of food waste and piggery wastewater: Focusing on the role of trace elements, (2011). Bioresource Technology, Volume 102, Issue 8 Pages 5048-5059, ISSN 0960-8524, https://doi.org/10.1016/j.biortech.2011.01.082.

4 FEEDSTOCK RECEIVING AND ORGANICS SEPARATION

4.1 TRUCK TRAFFIC PATTERNS AND QUEUING

All trucks will enter the facility from South Wallace Street through a gated entrance. The gate will be open during daytime hours.

Trucks delivering non-pumpable waste in a dump trailer or roll-off container will back through one of the solids receiving bay doors to a curbed stop at the tipping wall. The concrete floor will be striped with yellow lane markings to assist drivers with alignment. If the solids bay is occupied, additional trucks will need to park outside of the building in the designated area.

Trucks delivering pumpable food waste or F.O.G. can pull into the building through the north overhead door, closest to the digester tank.

Vans delivering palletized products will back to the loading dock at the north end of the building.

After tipping, trucks that delivered non-pumpable waste will exit the bay doors and turn left and will exit at Wallace.

Liquid tankers will pull through the building and turn to the right and proceed around the tanks to the Wallace Street exit.

Trucks delivering to the facility will have a manifest with verifiable load weights or volumes with the generator(s) listed and the collection date.

All trucks will exit the facility at South Wallace Street.

4.2 NON-PUMPABLE WASTE TIPPING

Trucks will back into the building through an overhead bay door (*125K*) and stop short of the tipping wall by about 8 feet. The exterior door will close. The drivers will then exit the cab and loosen hold-downs or dogs on the trailer gate. The driver will then back to the tipping curb wall until the tires on the rear axle contact the tipping curb. The driver will then release the final hold downs on the trailer gate and raise the trailer bed to dump the load into the live-bottom receiving bunker *(Figure 4-1*). After the load is tipped, the driver may pull forward from the curb and rinse off any residuals from the back of the trailer with a garden hose. Wash water will be collected at trench drains and will drain to a holding tank prior to further treatment in the anaerobic digester. The driver will then fully lower the bed and latch the trailer gate prior to opening the overhead door to exit the building.

While the receiving bunker is designed to be large enough for 3 full truckloads, tipping space will be provided on the main floor to hold additional loads during busy periods when the bunker is full. Waste will be transferred from these floor level bunkers to the live-bottom bunker with a wheel loader. All food waste will be normally processed the same day it is received. No putrescible waste will be stored onsite. The equipment and processing area will be cleaned once per day after processing. Up to two trailer loads of palletized, packaged, food products may be stored in the building for up to 7-days prior to processing. No product will be stored outside of the processing building.

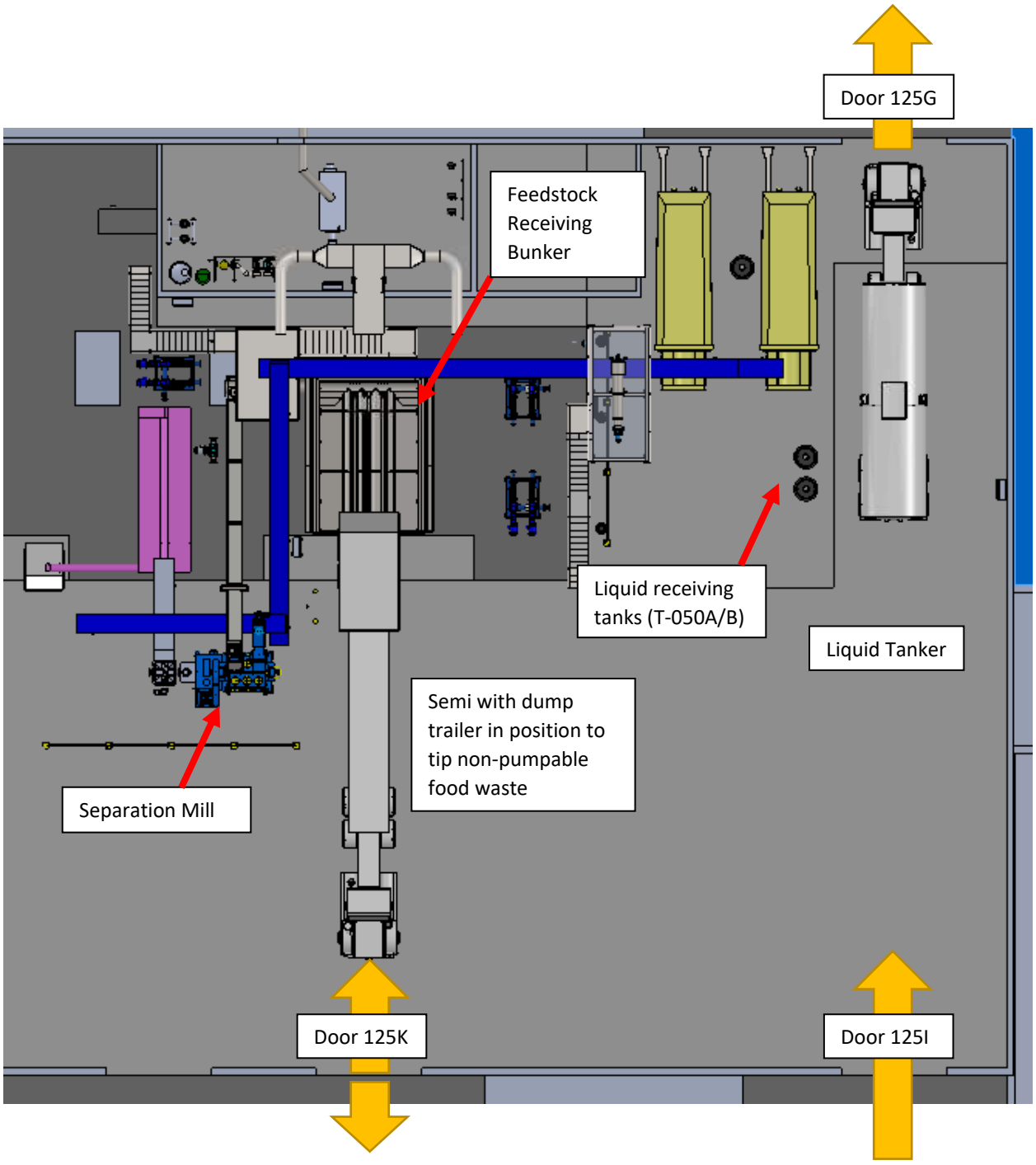

Figure 4-1: Top down view of feedstock reception area.

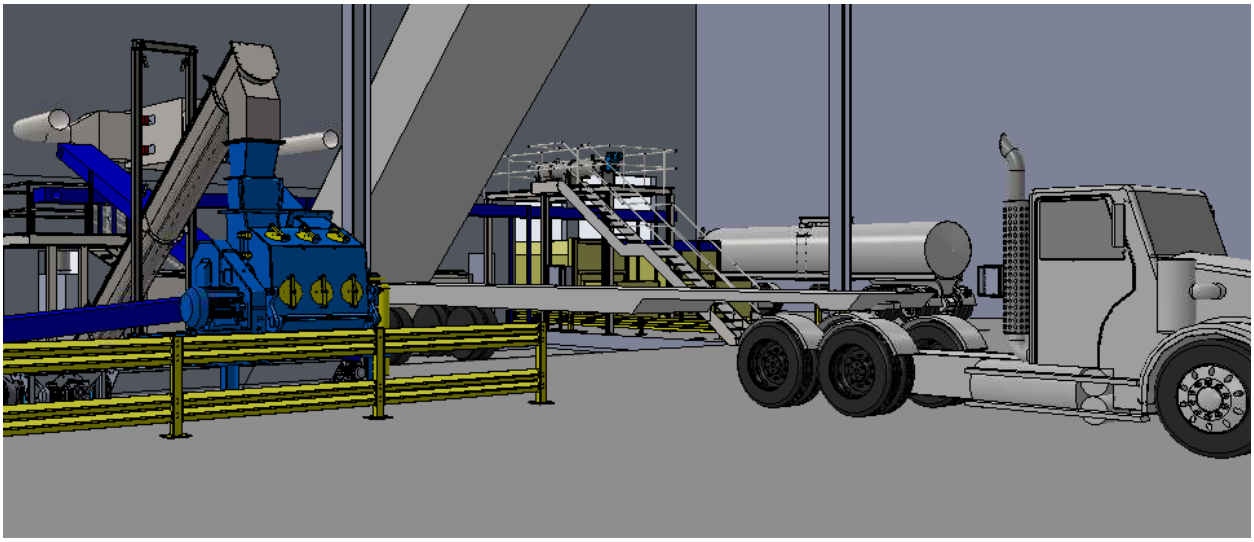

Figure 4-2: Perspective view of a truck tipping non-pumpable food waste into reception bunker.

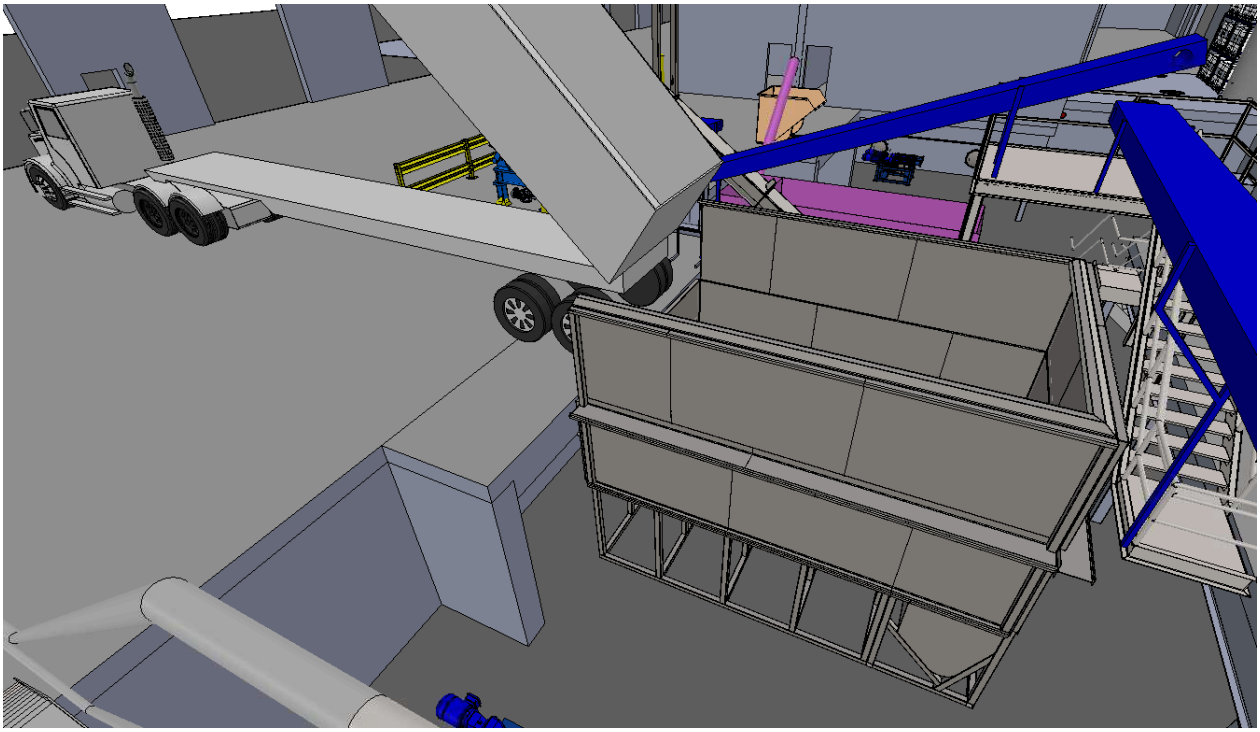

Figure 4-3: Perspective view of feedstock reception bunker from the screening platform.

4.3 PUMPABLE WASTE RECEIVING

Tankers with pumpable food processing waste, wash water, or fats, oils and grease will pull into the north bay through an overhead door (125I). The tankers will gravity discharge their loads through a 3, 4, or 6 inch hose to below-grade holding tanks (T-050A or T-050B). Hoses with Camlock end fittings will be provided by the plant for the trucks to use for discharge. When the truck is empty, the driver will close the valve at the truck discharge nozzle and disconnect the drain hose. The driver will then drive through the building and exit at the northwest overhead door (125G).

A hose rack will be installed in this area to store the hoses when not in use. A 5/8 inch garden hose will be provided in this area for washdown. Any wash water from the floor drains will drain to the same holding tank. All pumpable waste will be combined with the non-pumpable waste in the separation mills. The pumpable waste will dilute the organic solids and form a homogenized slurry that is pumped to the feedstock tanks prior to digestion.

4.4 LIVE BOTTOM BUNKER

Solids will be automatically conveyed from the live-bottom bunker to the separation mills. The bunker will be designed to hold 90 cubic yards of food waste, which will accommodate between 2 and 3 full truckloads dependent on load volume. The bunker will feed each separation mill an average of 28 cubic yards per hour or 12 tons per hour at a minimum expected density of 850 lbs/CY for curbside collected SSO up to about 1100 lbs/CY for grocery store waste. An average of 192 tons per day will be processed through this equipment or between 10 and 15 trucks per day. One separation mill will be able to process 192 tons in 16 hours. Food waste will be processed on first and second shift, but additional third shift staff may be added in the future to allow the facility to process additional waste. Space is planned in the building for a second bunker and separation mill that will be added as processing capacity is filled.

4.5 SEPARATION MILL

A proven separation mill, built by Wackerbauer of Germany, will be used to pulp the organic waste fraction and remove gross contaminates. The bulk food waste will be conveyed from the live bottom bin through an enclosed shaftless screw auger to the mill. A progressive cavity pump will supply liquid feedstock to the mill for dilution from the liquid receiving tank. The feedstock will be pumped from the liquid receiving tanks. The processed waste will be a pumpable consistency at 14% total solids. The pulped organic feedstock will still contain up to 2.0% non-digestible material, in the form of grit composed of stone, sand, glass, organic calcium (shells and bones) and 3/16-3/8 inch pieces of packaging, including paper and plastics. The largest particle size will be 1/2 inch. The dense grit

will be settled after the separation mills and the plastic fines will be screened from the digestate before dewatering.

Figure 4-4: Food waste with packaging prior to separation (Innsbruck, Austria)

Figure 4-5: Pulped food waste with broom handle to show slump

The pulped feedstock will be augured into a grit separation hopper after the separation mills.

Each separation mill is powered by a 100 HP motor and can process 10 tons of SSO per hour or about 25 cubic yards. Gross non-digestible materials are rejected from the mill and may be rinsed with fresh water before being conveyed away from the mill by an inclined screw auger. The wash water flow rate can vary between 5 and 10 GPM at 60 PSIG. The rejected packaging may need to be rinsed to remove the residual organics from the packaging. Belt press filtrate may be used for the rinse operation. The residual waste will be conveyed to stationary compactors. After the compactor container is full, it will be removed by a roll-off truck and disposed of at a local MSW landfill.

Figure 4-6: Separated packaging in hopper (Innsbruck, Austria)

Figure 4-7: Close-up of separated packaging (Innsbruck, Austria)

4.6 GRIT SEPARATION

The pulp from the separation mills is expected to contain up to 0.5% settleable solids that can be removed prior to digestion. The solids or grit will consist of organic calcium (egg shells, bones, and seafood shells), glass, sand, and gravel. Since grit is denser than water, it will have a natural tendency to settle out of the mixture. Larger contaminates will settle faster than smaller particles such as sand or eggshell pieces. At 14% total solids, the larger particles may be removed in a settling tank.

The pulp will first flow into a 3,000 gallon sloped bottom hopper that will funnel settled solids to an inclined screw conveyor for removal. All the larger particles will drop out immediately and be slowed conveyed out of the tank by the steeply inclined auger. Liquid feedstock carried on the auger flights will drain back to the tank.

5 FEEDSTOCK\BIOMASS EQUALIZATION TANK

The Biomass Equalization Tank is an insulated bolted steel tank with 320,000 gallon capacity. The tank is approximately 33.63 feet in diameter and 53 feet tall. The tank serves as a hydraulic buffer and can store up to 5 days of conditioned feedstock for the digester. A top center-mounted agitator will be installed in the tank to prevent stratification of the material, ensuring a consistent mix for feeding. The feedstock blend may be pre-heated with an external heat exchanger.

In addition to hydraulic buffering, blending multiple feedstocks will normalize the caloric content of all component feedstocks. Without blending, the caloric content could vary widely from day to day and would closely correlate to the caloric content of the feedstocks received that day. The caloric content is a function of the amount of carbon available for the bacteria to digest. The available caloric content is either approximated by a Chemical Oxygen Demand test or by a Volatile Solids test. This facility will receive waste from a variety of sources and different compositions. The caloric density of that feedstock will vary from load to load. Fast swings in the caloric density of the feedstock should be avoided to maintain a stable biological anaerobic system. Typical problems encountered when slug feeding the system include rapid foam development from quick acidification accompanied by a drop in biogas quality and increased biogas volume. The 5-day retention time provided by the biomass tankage reduces the operational challenges of maintaining a stable and optimum biology with multiple sources of feedstock.

Another consequence of feedstock retention in a separate tank is that the biological processes of hydrolysis and acidification will begin. These are essential steps in anaerobic digestion that break down complex carbon chains into simple volatile fatty acids that the methane producing bacteria use as a food source. By allowing these steps to proceed separately has been shown to increase the destruction of volatile solids in anaerobic digestion (AD) systems for equal system retention times.

The tanks will have gas tight steel roofs. A pipe will connect the head space of the tanks with the biogas header pipe to maintain equalized gas pressure in the system. Any gases produced in the biomass tanks will be processed with the biogas. The blended feedstock stored in the biomass tanks will be acidic (3-5 pH) and will produce primarily carbon dioxide gas. The biomass tanks will also produce many trace aromatics that are associated with spoiled or acidified foods. Vinegar (acetic acid) is a primary odor component, but other volatile fatty acids such as butyric acid and propionic acids also contribute. Hydrogen sulfide may be present as high as 1000 parts per million (PPM). Gas quality is not typically monitored from the biomass tanks since all produced gases are blended with the biogas from the digesters. The gases (principally carbon dioxide) generated during the biological processes of

hydrolysis and acidification in the biomass tank will dilute the overall heating value of the produced biogas. But by blending the gases in the system, any aromatics are also contained and controlled.

The biomass tank will have 1,200 linear feet of 2-inch corrugated stainless heat transfer tubing running along the interior wall to provide about 1.25 MMBTU/h of in-situ heat transfer capacity. Heated water/glycol will be supplied at 160° F from the boilers to the tank. This tank will have 4 stainless tubing circuits each with a length of 300-feet. Each circuit will loop along the interior wall three times from the supply manifold to the return manifold. The biomass tank contents will be maintained around 113° F (45°C).

6 DIGESTER TANK WITH RIGID ROOF

The rigid roof digester tank has a working volume of 1,680,000 gallons. This tank has a 75.66 foot diameter and is approximately 53 feet tall at the eave and 62 feet tall at the peak. The tanks are constructed of white powder-coated bolted steel panels and are insulated. A single, slow turning, top mounted agitator provides continuous mixing. The conditioned biomass from the biomass equalization tank is dosed into the tank at a turbulence zone created by the agitator to minimize the time required to obtain a complete mix.

The digestate temperature will be maintained at 125°F as favored by thermophilic anaerobic bacteria. Fresh feedstock entering the tank will be preheated with an external heat exchanger. Digestate can also be circulated through the external heat exchangers and returned to the tanks by either the dosing pump or the screening pumps. The digester tank will also have 1,150 linear feet of 2-inch corrugated stainless heat transfer tubing running along the interior wall to provide about 1 MMBTU/h of in-situ heat transfer capacity.

6.1 GAS STORAGE AND PRESSURE MANAGEMENT

Biogas produced by the bacteria will migrate to the digester surface and boil out of solution. The biogas will be collected in the headspace of the tank. The digester headspace will be connected with the feedstock tank headspace by a pipe. The gasses produced during hydrolysis in the feedstock tank will blend with gasses produced in the main digester in the tank headspace. Two gas header pipes connected to the digester tank roof will carry the biogas to the gas upgrading system and to the flare.

The tank will be protected from over-pressurization and from vacuum conditions primarily by the control system, which will manage the gas pressure by first modulating the demand of the gas upgrading system and secondarily by firing and modulating the flare burner.

Both the feedstock tank and the digester will be finally protected from over-pressurization and from under-pressurization (vacuum conditions) by safety pressure relief valves (PRV). The pressure relief valves are weighted platters that directly vent to the atmosphere when the pressure exceeds the allowable working pressure of the tank. These tanks will have a maximum design pressure of 6.9 oz/in2 or 12.0 inWC with a maximum working pressure of 5.8 oz/in2 or 10.0 inWC. The PRV crack pressure will be set to 4.6 oz/in2 or 8.0 inWC on both tanks. The tanks will have a design vacuum pressure of 1.2 oz/in2 or 2.0 inWC and the relief valve will have a vacuum crack pressure of (-)0.5 oz/in2 or (-)0.9 inWC.

Figure 6-1: Typical bolted steel digester tanks prior to insulation

Green Era tanks panels will be white with white siding. Barcelona, Spain (Tank Connection)

6.2 TANK INSULATION

A cable-stayed standing seam tank insulation and cladding system will be installed on the digester and biomass tank side walls. 24-inch aluminum panels are formed from pre-coated polyester 24-gauge coil stock in a factory. 2-inch thick foil-faced polyisocyanurate insulation boards are directly laminated to the jacket with a flexible adhesive. The standing seam panels (Figure 6-2) are stacked onto long pallets up to 40-foot lengths and shipped to the jobsite on a flatbed truck. Stainless steel 3/16-inch diameter cables are banded around the tank at 4-foot spacing. A specially formed stainless steel clip is used with a stainless tie-wire to attach the panels to the cables to secure the panels during installation.

Figure 6-2: Composite Aluminum and Insulation Board Cladding Panels

Figure 6-3: Clip and Tie Wire back to cable.

The siding panels are mechanically seamed together and double-folded with a walking die tool (*Figure 6-5*). This is usually started at the top of the tank and is allowed to walk down the seam. A safety rope is used from a manlift basket to ensure the tool doesn't drop if it walks off the seam. After seaming, each panel is mechanically tied to its neighbors and is water and vapor tight.

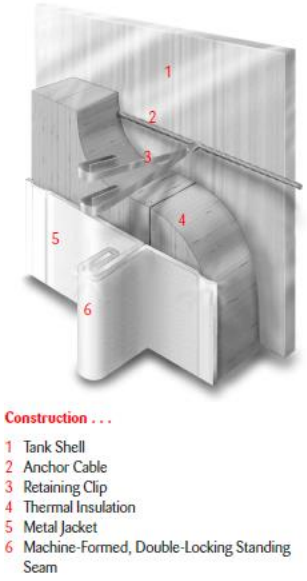

Figure 6-4: Cutaway illustration of tank cladding panel

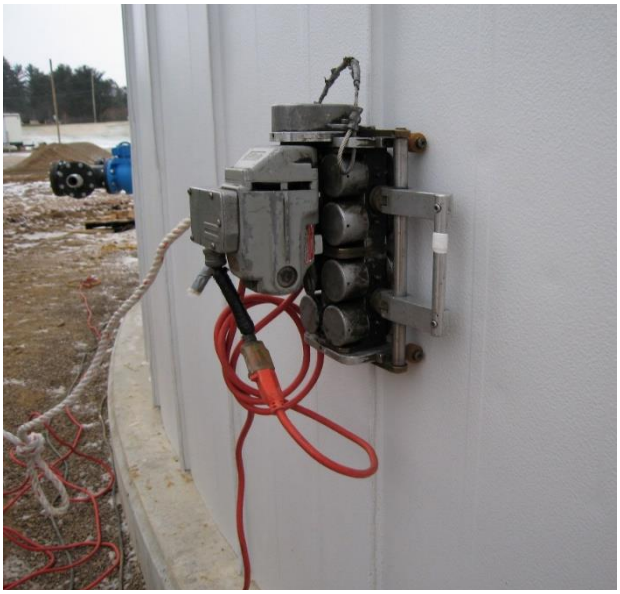

Figure 6-5: Mechanical Seamer

Figure 6-6: Typical completed siding after installation.

7 HEATING AND DOSING

7.1 HEATING

The digester biology is sensitive to temperature changes. This facility will operate the digesters around 125° F that favors *thermophilic* bacteria consortia. Thermophilic bacteria are by definition a class of bacteria that grow and thrive best around this temperature. Other anaerobic bacteria that are classified as *mesophiles*, prefer cooler conditions, around 100°F.

The anaerobic biology will perform best under stable temperature conditions. Even a swing of 4°F in a 24 hour period can negatively impact their metabolism. This isn't different than the human body's need to regulate to 98.6° F. The biology can adjust to live at different temperatures and thrive, but fast changes will shock the system. Multiple redundancies are planned for this facility to ensure that the biology can be maintained at optimum temperature and health at all times.

The feedstock will be heated through an inline water/sludge heat exchanger as it is pumped to the digesters for feeding. The heat transfer fluid (glycol/water) will be heated by a natural gas fueled boiler. The system will operate with a 180° F supply temperature.

Passive hot water heating coils will be installed in both tanks to maintain the sludge temperature without requiring the sludge to be pumped through the external heat exchanger. This saves operating costs by reducing the number of hours the sludge pumps are needed to circulate sludge for heating. The horsepower requirement is much lower to circulate the heat transfer fluid between the boiler and the tank than to circulate the sludge. The progressive cavity positive displacement pumps used to pump sludge also require frequent stator and rotor replacement to maintain efficiency. The life of the wear parts is extended if the pump isn't required to operate for heating service.

Stainless corrugated tubing is hung on brackets along the inside wall of the tank. The brackets are spaced evenly around the tank, with two brackets per tank panel about 4-feet on-center. The tubing is has 2-inch inner diameter and each loop can be up to 300 feet long. the heat transfer fluid flow rate is 25 GPM through each circuit or loop. The biomass tank will have 4 circuits and the digester tank will have 5 circuits. The tubing will be permanently connected to 4-inch diameter supply and return headers inside the tank. Two 4-inch tank nozzles will supply the headers. The outside nozzle will be flanged, while the inside nozzle will be field welded to the header. The inside nozzle and the headers will be grade 304 stainless steel.

During the winter, the feedstock may enter the plant at an average temperature of 50° F. The biomass tank can be held between 90 and 120°F to keep any oils and fats miscible and prevent floating layers. Higher holding temperature in the feedstock tank may increase the digester temperature above the 125°F target, but as long as the temperature changes are gradual the biology can easily adapt. Green Arrow has experience with thermophilic facilities operating successfully between 123°F and 135°F. Lower temperature operation is also possible, but the recommended floor temperature for thermophilic operation is 122°F (50°C) to ensure sufficient pathogen destruction. Maintaining sludge above this temperature for longer than 5 days is a reliable process to reduce salmonella sp. bacteria density to less than 3 MPN per 4 dry grams of total solids and fecal coliform to less than 1,000 MPN per dry gram of total solids.

7.2 DOSING / FEEDING

Blended feedstock will be automatically "dosed" or "fed" to the digesters in set intervals, usually once per hour. The volume of material to be transferred will be determined by the operator to optimize throughput and biogas production. The optimum dosage can be calculated based on the volume of sludge in the digester, the measured chemical oxygen demand (COD) of the feedstock, and the measured volatile fatty acid levels of the digestate.

Digestate volume provides space for bacteria to feed and reproduce. The number of bacteria that can occupy one gallon of digestate is limited. The number of calories a digester can consume is directly proportional to and limited

by the liquid volume in the tank. A rule of thumb is that for every 100,000 gallons of digestate volume, the bacteria have the potential to produce 25 SCFM of biogas at 60% methane, enough energy to fuel an engine that turns a 100 kilowatt generator. Digesters that process food waste can achieve up to 35 SCFM of biogas at 60% methane.

Food waste, just like unprocessed food, can have widely variable caloric densities. A 16 ounce candy bar has more calories than a pound of celery. A way to quickly measure the caloric density of liquid feedstock is to measure its *chemical oxygen demand*. This laboratory test is an easy and fast way to measure the caloric density of the feedstock and can be performed onsite. It is important to monitor the caloric density of the blended feedstock so that the bacteria are not overfed. The long retention time in the biomass tank normalizes the caloric density of the incoming feedstock by blending the different food wastes together.

One way the health of the digester biology can be monitored is by measuring the *volatile fatty acids* present in the digestate. This is a simple test that can be performed onsite. All the complex sugars, carbohydrates and starches in the feedstock must first be broken down into simple volatile fatty acids (VFA) before being consumed by the methane producing bacteria. By measuring the VFA concentration in the sludge the operator can determine if the bacteria are being overfed or underfed. Overfeeding leads to an increase in the VFA concentration in the tank. This is analogous to overeating at Thanksgiving and experiencing a sour stomach or *indigestion*. Overfeeding should be avoided as it results in multiple undesirable symptoms including foaming and reduced gas quality. VFA and other process monitoring parameters are detailed in *Section 16.1 Anaerobic Process Monitoring*.

7.3 BOILERS

Two 3.5 MMBTU/h input natural gas condensing boilers (*F-360, F-361*) will be installed to provide process heating capacity for the plant. Each boiler is sized with a 3.0 MMBTU/HR output capacity. The two boilers will be installed in the mechanical room of the Operations Building. One boiler will provide sufficient heating capacity to operate the facility at thermophilic temperatures during the winter months. The average heat demand will be around 2.25 MMBTU/h (*Mass Balance dwg 1501-0001-008*).

Packaged condensing boilers are specified with full burner modulation between high and low fire rates. A total turndown of 5:1 is specified.

The heat transfer fluid shall be designed for 50% ethylene glycol with a boiler outlet temperature of 180 F and a nominal 30 degree temperature delta between the return and supply temperatures.

The boiler status shall be displayed on the plant SCADA along with any fault codes or warnings. Non-critical alarms shall be resettable from the SCADA.

Condensing boilers have high fuel efficiency when water return temperatures are below 150 F. When the in-tank heating loops in the feedstock tank and the digester are used for primary process heating, the return water temperatures could be operated as low as 140 F. Since condensing boilers operate at cooler exhaust temperatures, water vapor will be condensed in the heat exchanger section from the exhaust gas. The condensate will be drained to the sanitary sewer per Chicago code. The heat exchanger shall be stainless steel to provide long-term corrosion resistance.

8 PUMPS

All sludge pumps will be variable speed progressive cavity pumps that are well-suited for pumping viscous materials. In the US, this style of pump is used extensively in the wastewater industry and food industry. An inventory of spare wear parts and new pumps should be kept at the facility.

Figure 8-1: Seepex pump with 'Smart Stator'.

Figure 8-2: Cross-section of Seepex pump rotor and stator

The typical wear parts on this type of pump is the rubber stator and the rotor. For these facilities, the stator elastomer that provides the best value is NBR (nitrile-buna rubber). EPDM (ethylene propylene diene monomer rubber) would be expected to perform better, but it is not as resistant to abrasive wear as the NBR elastomer.

The specified Seepex pumps are designed with a two-piece stator. Each half is molded separately. The halves fit around the rotor and are clamped into place by four separate plates. Two people can usually replace this type of stator in two hours. Most of that time is in preparation and clean-up. Under normal conditions when the stator is being changed because of wear, clean water should be used to flush the pump before disassembly. The suction piping can be isolated with a knife gate valve. Then a garden hose can be connected to a port on the suction side of the pump and the pump can be run slowly to push water through the pump and discharge piping and displace the sludge. Then a knife gate valve can be closed on the discharge side to fully isolate the pump for service. The remaining water in the pump and piping can be drained onto the floor from the lowest fitting in the system or the suction housing on the pump. A video of the procedure to change the stators can be viewed on the Seepex Youtube channel as well as other common maintenance procedures for this type pump.

The flowrate will be measured by mag-flow meters in each sludge pump circuit. The flowrate data will be compared to the pump's expected performance based on the speed of the motor and the pump curve. As the stators wear more fluid will slip back past the sealing line between the rotor and stator from the discharge side of the pump to the suction side of the pump. This will reduce the pump capacity for at high discharge pressures. The data will be used to determine the appropriate time to change the stators and to confirm normal pump operation. The flowrates will be visible from the plant SCADA and trended over time. Each device also has an operating hour counter on the SCADA and several resettable counters that can be used to record maintenance intervals.

9 POST-DIGESTION SCREENING

Gross non-digestible material in the digestate that was not captured in the separation mill will be screened prior to dewatering. The non-digestible material will primarily be plastic chips from 3/16 to 3/8 inch in average size. If the non-digestible material is not removed, it will limit the uses of the press cake after dewatering. Plastic "contamination" (i.e., the non-digestible material) is not permitted in the dewatered press cake if it will be land applied for agronomic use.

The digestate will be pumped (P-090A/B) to a specialized screw press (S-205) to capture particulate matter larger than 3/16 inch in size (*see Figure 9-1*). It is best to remove fine plastic materials after digestion, since the liquid has a much lower viscosity than the pulped feedstock and may be mechanically separated without blinding the screen. The screened digestate will flow to a 30,000 gallon in-ground storage tank (T-205). Screening will normally operate concurrently with dewatering.

After the particulate is strained from the liquid fraction, the captured particulate will be conveyed by a tapered rotating screw that will contain the volume and squeeze out any remaining free water. The compressed plug of screenings is discharged from the end of the screw onto the waste conveyor Y-067C. The screenings will be combined with the other separated waste packaging from the separation mills and fed to the stationary waste compactors.

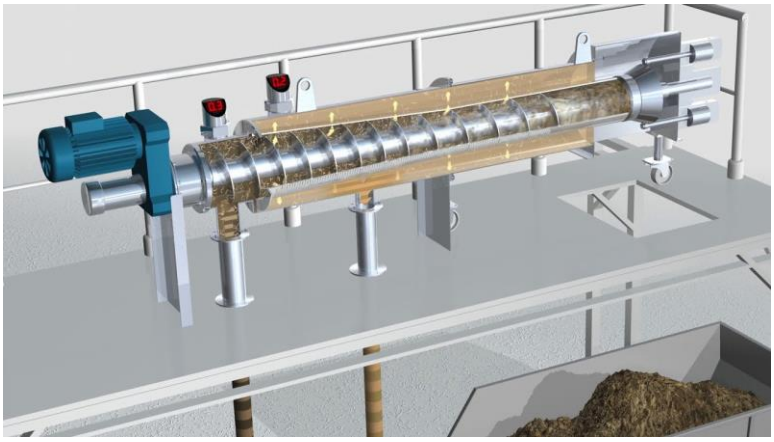

Figure 9-1: Huber Strainpress sectioned illustration

Figure 9-2: Huber Strainpress Installation example

10 DEWATERING

One 2-meter belt press will be used to dewater the digestate to produce a 20-25% dry press cake and a reduced solids filtrate. The press will be installed inside the main plant building and is sized to operate 13 hours per day at a hydraulic loading of 75,000 gallons per day at 3.9% TS, which matches the typical hydraulic loading for this facility for a 5-day week. Like any mechanical dewatering device, the capacity is based on the pounds of solids the machine can recover in a given time period, not the hydraulic capacity. Water can efficiently drain through any filter, but solids have to be conveyed through the entire unit. Typical belt presses can process 1,000 pounds of bone dry solids per meter of belt per hour. The 2-meter press can handle 1 ton of bone dry solids per hour per machine. Bone dry solids are the fraction of the sludge that is not water. For any organic material, dry matter or total solids can be measured quantitatively by evaporating all of the water from a sample in a low oven. The cake discharged from the press will not be bone dry, it will still contain water. The cake dryness will range from 20-25% total solids. It follows that 75-80% of the cake is water. The anaerobic digestate before dewatering will be around 4% total solids, comprised mostly of undigested cellulose and bacterial bodies. The feedstock will be blended to 14% total solids, but during the process of digestion those solids are consumed and broken down by the anaerobic bacteria. (Cellulose, or woody plant fiber, is unable to be utilized directly by the anaerobic bacteria.)

Digested food waste contains colloidal solids which are inseparable from the water without treatment. A colloidal emulsion differs in this way from a slurry in which distinct particles are suspended in a liquid and will freely settle. If digestate is allowed to sit undisturbed for a day, no settling will be observed, and therefore no fluid can be decanted from the surface. To allow the solids to be separated from the water, coagulant or flocculent chemicals must be added to the digestate. Most solids particles in the digestate carry a negative electrical charge and repel one another, preventing coagulation from occurring naturally. The best way to overcome this challenge is to dose a small amount of coagulant aid to the digestate that is based on water soluble polymer chemistry.

10.1 POLYMER CHEMISTRY

Polymers used for coagulation are manmade organic carbon-hydrogen chains that are engineered to carry a specific electrical charge (positive or negative). A wide variety of polymers have been developed over the years to enable dewatering of a variety of wastewater sludge types. For this facility, a cationic polyacrylamide polymer will be used, which is the most widely used class of polymer coagulants in the world. The polymer is not toxic to human or aquatic health and breaks down readily in the environment through hydrolysis.

The polymer chain can be thought of as two foot piece of yarn with small disc magnets knotted onto the string every two inches. If the string of magnets is suspended in a bucket of water with iron filings, the filings will be drawn to the magnets. If the string is allowed to fall into the bucket, the magnets and metal filings will clump together and will be easy to remove or filter from the water. When polymer is added to sludge, solids particles will be attracted to the positive charge sites on the polymer chain. This will allow the solids particles to join or flocculate. The floc will be formed in seconds with gentle agitation. This can be observed on a small scale by adding polymer to a 2-cup glass jar. Pouring the sludge into an empty jar to mix and back again is usually enough agitation to form a distinct floc. The floc will look like cheese curds after they are cut. The floc is somewhat fragile and can be broken apart if mixed too aggressively. The filtrate usually still have some color, like strongly brewed tea, but it should be mostly free of suspended solids (*Figure 10-1*).

Figure 10-1: Filtrate samples after jar testing different polymers

10.2 DEWATERING PROCESS DESCRIPTION

Screened digestate will be pumped to the press from one 30,000 gallon equalization tank (T-205). The variable flow rate will be adjustable between 70 and 160 gallons per minute per press dependent on the inlet total solids.

Diluted polymer will be injected into the digestate feed pipe at of a static mixer (VT-211) that will quickly and evenly disperse and mix the polymer with the sludge. The sludge will discharge to a flocculation tank (T-211) with a mechanical mixer to promote floc formation. The speed of the mixer can be varied to control the size of the floc. The floc tank is only about 200 gallons and the sludge will be retained for up to 2 minutes. The flocculated digestate is distributed evenly onto the first belt and the free water is allowed to gravity drain. This section of the press is called the 'gravity belt' (*Figure 10-2*). The digestate thickens as it is conveyed towards the pressure section. A portion of the filtrate from the gravity belt is captured in a pan and recycled through a booster pump to two spray bars that continually wash the belt.

The digestate will enter the pressure zone of the press where it is captured between two filter belts and progressively squeezed to remove free water. The resulting cake will measure between 20 to 25% total solids. This cake solids fall off the belt onto a collection conveyor. The cake will be directly loaded from a distribution conveyor (Y-220C) into a parked truck trailer or roll-off box inside the building. A trailer will take about 6 hours to fill. Operating a full capacity, each press can discharge more than 4 tons of 25% TS cake per hour. About 50 wet tons of cake will be produced each day (*Table 10-1*) *at* 25% TS. The cake will be transported off site for blending with soils and compost.

Figure 10-2: Thickened digestate at the end of the gravity belt conveyor bed on a Charter Belt Press

10.3 CAKE SOLIDS HANDLING

The material will be loaded onto trucks for transport to composting facilities.

While Green Era will not be involved with the cake solids once they are removed from the site, a brief summary of the fate of the cake solids is provided herein. Composters using windrow composting methods will top dress yard waste compost windrows with the cake solids in a low percentage and distribute the digestate over a large volume of compost. The digestate will be uniformly blended into the compost piles during turning. Composters using static piles will incorporate the digestate with yard waste when building the piles. They may either use a mechanical compost mixer for this step or simply incorporate it with a wheel loader while building the pile.

All wholesale and retail compost product labels containing digestate will list “anaerobically digested food waste” as an ingredient.

10.4 FILTRATE CAPTURE

The filtrate from the press will be captured within a concrete curb and directed to a catch basin. The catch basin will gravity drain into one of two 30,000 gallon tanks below the main level floor slab. Some filtrate may be recycled in the plant for process use, any additional volume will overflow to the sanitary sewer, or be pumped to the sewer through a force main. The discharge volume will be monitored with a flow meter and recorded by the SCADA. An refrigerated autosampler will automatically collect samples proportional to the discharge rate. Green Era will use the samples for analytic measurements to determine average nutrient loading. Samples may also be collected during discharge periods from the sampling and final outfall manhole on the west side of the West 83rd Street entrance driveway as required by the MWRD discharge permit. The samples collected from the outfall manhole will also contain any sanitary flows from the restroom, office sinks, and floor drains in these finished areas. Trench drains and sumps in the Operations building are not connected with the sanitary sewer. The wash water is drained into or pumped to the liquid receiving tanks for treatment through the anaerobic digester.

10.5 POLYMER AND GREY WATER USAGE

The polymer may be received and handled as a concentrated emulsion, with 40% active ingredient. The polymer will be delivered in 275 gallon totes. Totes of emulsion polymer will be stored along the west wall on pallet racking adjacent to the dewatering area.

The volume of polymer needed is directly proportional to the dry tons of solids dewatered. Operational experience has shown usage in the range of 18-20 pounds of active polymer per dry ton of solids for anaerobic digestate. The plant will use around 75 gallons per day, for the flows shown in *Table 10-1*. To use the polymer, it must first be 'made-down', or diluted in water. Diluting the polymer allows the tightly coiled polymer chains to relax and unwind. The polymer will need to age for 30 minutes to fully activate. The fresh water usage is about 200 parts water to 1 part polymer. 15,000 gallons of water will be needed to make-down 75 gallons of polymer. Potable water will be used to make-down the polymer. Recycled filtrate cannot be used for this purpose. Dry polymers are also available and may be chosen for this facility based on operational testing. The make-down process for the dry product is similar to the emulsion.

The belt press uses two belts to dewater the digestate. Each belt must be continually sprayed with water to clean the fines from the filter cloth. The belt wash bars have multiple flat fan spray nozzles to cover the full belt width. The 2-meter press will use 80 gallons per minute of wash water. During press operation, the wash water will normally be recycled from the gravity belt section of the press. But during start-up and shut-down, potable water is used for 5 minutes at start-up and 15 minutes at shut-down. Potable water will also be used for 5 minutes per hour to flush the system during operation. The total potable water usage for the wash bars for the press during the 13 hour day will be around 5,000 gallons. The total combined usage of potable water for the day, will be around 20,000 gallons depending on polymer usage and wash down time. To supply the dewatering area with sufficient flow, a 4 inch water supply line will be needed. This will be large enough to add a second press in the future if the plant is expanded.

Days Operation Per Week	Days	5
Number of presses	#	1
Hours of Operation	h	13
Digestate (3.9% TS) to dewater	GPD	75,419
	GPH	5,801
	GPM	97
Belt Wash Water	GPD	5,040
Polymer Make-down Water	GPH	1,128
	GPD	14,660
Emulsion Polymer Usage	GPH	5.5
	GPD	72
	GPW	360
Dry lbs. solids/meter belt * hr.	lb./m*h	1,000
Cake Sludge (tons @25% TS)	TPD	49
	TPH	3.75
Loads Per Day (25 tons)	#	2

Table 10-1: Dewatering Capacity Summary

11 FILTRATE QUALITY

Filtrate from the belt press will contain a high concentration of nutrients and organic matter relative to domestic strength wastewater. Typical values are presented in *Table 11-1* below.

	Units	Median Domestic Strength Wastewater	Press Filtrate
TKN	mg/l	40	2,000-5,000
TP	mg/l	8	40 - 200
TSS	mg/l	720	200 – 2,000
COD	mg/l	500	3,000-7,500
pH		6.8-8	7.8-8.5

Table 11-1: Typical Nutrient Concentrations

Nutrient in wastewater must be removed before being discharged to the environment. The receiving municipal wastewater plant (MWRD) will be responsible for nutrient removal from the filtrate. Since the filtrate contains a higher concentration of nutrient than typical wastewater, MWRD may request that we auto-sample the filtrate and test periodically. It is common for sewer districts to assess additional fees based on the mass of nutrients being discharged to the sewer in addition to volume charges.

12 BIOGAS SEPARATION AND SWEETENING

A pressure swing adsorption biogas upgrading system is planned to be installed at this facility to produce pipeline quality biomethane from the digester biogas. This facility will have the capacity to upgrade 400 standard cubic feet per minute (SCFM) of raw biogas to 216 SCFM of biomethane. The biomethane quality will be controlled to have a minimum energy density of 970 BTU/SCF.

The bacterial consortia that decompose the starches and sugars in the feedstock into volatile fatty acids respire carbon dioxide. The bacteria that consume the volatile fatty acids respire methane gas as a byproduct of their metabolic process. Both biological processes occur within an anaerobic digester and lead to biogas containing both methane and carbon dioxide. Carbon dioxide is not directly combustible and dilutes the energy density of the biogas. Natural gas contains primarily methane along with other combustible hydrocarbons. Natural gas typically has an energy density around 1,000 BTU per standard cubic foot. Biogas has an energy density ranging from 450 to 650 BTU per standard cubic foot. In order to burn biogas in equipment designed to utilize natural gas, the carbon dioxide must be separated and removed from the biogas to concentrate the methane. The resulting product gas is referred to as 'biomethane,' to distinguish between the low-BTU raw biogas and the separated high-BTU methane gas.

In addition to concentrating the methane, other constituents such as hydrogen sulfide, volatile organic carbons (VOCs), and water must be removed from the biogas to produce a saleable product that can be accepted by utilities for direct injection into the natural gas grid or pipeline. Removing these sour gases is called sweetening. The process of separating the CO2, removing sour gases, and conditioning the raw biogas to produce biomethane is generically called *biogas upgrading*.

12.1.1 TECHNOLOGY AND PROPOSED EQUIPMENT DESCRIPTION

Equipment to upgrade the biogas to biomethane is proposed to be installed at the Green Era facility. The equipment will use a process known as *pressure swing adsorption* to upgrade the biogas to produce pipeline quality biomethane. This process is widely used in industry to separate many different types of gasses that have different molecular weights. Gas is pressurized between 100 and 150 pounds per square inch and passed through a bed of solid media with a micro-pore structure that is extremely small and consistently sized. This media is called a molecular sieve. The molecular sieve is engineered so that its pore structure adsorbs molecules that are the same size as carbon dioxide (CO2) and smaller, but reject anything larger, such as methane (CH4). The selectivity of the media is dependent on the physical properties of the molecular sieve and its operating conditions. As the molecular sieve adsorbs more and more CO2 into its pore structure, it begins to saturate and allow some CO2 to slip past with the product gas. This is physically analogous to the way a sponge can soak-up and hold water within its volume up to the point at which it becomes fully saturated. The water molecules are not reacting with the sponge material, they are simply being held in place by surface tension. The water can be released by mechanically squeezing the sponge and reducing the pore area. If you placed the sponge in a plastic bag and used a shop vacuum to remove the air from the bag, the water would also be removed from the sponge or one would say the water was *sucked out* of the sponge.

Biogas is pressurized with an oil-flooded screw compressor to about 150 PSIG and piped through a tank that contains the molecular sieve media. The media looks like small ceramic marbles. Most of the CO2 in the biogas is adsorbed by the media as the biogas passes through the filter bed. The methane gas molecule is too large to be adsorbed by the media and passes through the tank to the outlet nozzle for the product gas or biomethane. Since gases are not visible to the naked eye, in a pressure swing adsorption system a sensor in the product gas pipe monitors the level of CO2 that *slips* past the filter bed. The process can be controlled so that when the slip increases above the control point (1.5 or 2%), the bed is considered saturated with CO2. The flow will be shut-off from the filter bed by an actuated valve.

After the media becomes saturated and the feed stream is cycled off, the pressure on the filter bed is relieved to a blowdown tank until the pressure between the two vessels equalize. This gas will contain a significant volume of methane and will be recycled back through the system. The initial depressurization will have released much of the CO2 from the media bed. Next, a vacuum pump is used to pull the remaining CO2 from the molecular sieve. The *tail gas*, which will contain 7-9% methane will be pumped to a holding tank. The tail gas stream, that is mostly CO2, will be directed to a special burner called a *thermal oxidizer* to control emissions. The thermal oxidizer uses either a hot catalyst bed or a natural gas fired pilot to combust the energy-poor tail gas and prevents any fugitive emissions of methane. Methane is a potent greenhouse gas in the earth's atmosphere. The fully regenerated molecular sieve can be used again to efficiently separate CO2 from CH4 in pressurized biogas. This process is repeated step-wise for multiple filter beds and results in the quasi-continuous production of biomethane.

12.1.2 PSA PROCESS STEPS

(1) Biogas feed compression to 150 PSIG with a Guild-packaged, electric-drive oil flooded screw compressor. The compression results in sour water condensation.

(2) Feed flow measurement and control at the compressor discharge followed by PSA treatment to remove H2S, water vapor, VOCs and CO2.

(3) Product is delivered at pressures up to 140 PSIG to a final booster compressor to increase to 175 PSIG.

(4) Biomethane will transfer to the utility pipeline through a metering and regulation skid that will reduce the RNG to the pipeline operating pressure of 160 PSIG, provide custody control and flow metering, and odorization.

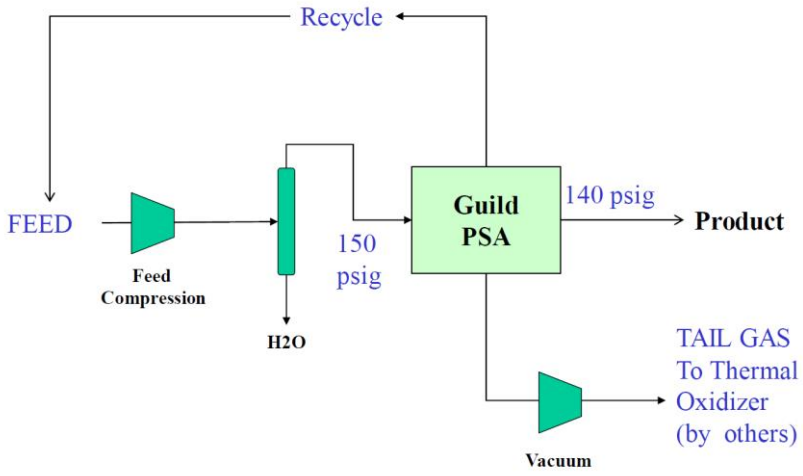

Figure 12-1: PSA gas upgrading equipment process flow diagram

12.1.3 REFERENCE FACILITIES

Overall Guild has more than *sixty* gas purification projects removing carbon dioxide or nitrogen from natural gas and methane rich streams. Guild has more than *twenty operating* biogas upgrade installations and these are listed below.

Unit	Location	Feed SCFM	Start-up
14	SPEC #3 - ID	350	May 2006
21	SPEC #5 - ID	350	May 2008
23	California	1000	May 2008
31	Texas	1250	April 2010
34	Ohio	75	June 2010
35	Ohio	700	November 2010
37	Georgia	385	May 2012
38	Minnesota	700	August 2014
39	Texas	400	June 2013
63	North Carolina	400	March 2015
64	Indiana	95	March 2015
65	Philippines	1450	September 2015
66	Philippines	1150	September 2015
67	Missouri	1350	June 2015
68	New York	1450	December 2015
69	Arizona	3000	June 2016
18	UK	850	May 2008
24	Washington	5600	March 2009
25	Tennessee	850	October 2008
28	California	2300	July 2009
30	Pennsylvania	5000	June 2009
32	Montana	2450	December 2010
33	Montana	1250	December 2010
36	Brazil	8300	October 2013
40	Tennessee	3800	June 2014
	DIGESTER		
	LANDFILL		

Table 12-1: Biogas Upgrading Reference Facilities

13 FLARE

A biogas flare will be installed to combust excess biogas. The flare will have a dedicated controller and will be capable of being manually operated at the local panel, independent of the plant control system. The flare is sized to burn the maximum flow rate of biogas the digester could generate. Flaring is needed to combust biogas in the case that the gas-upgrading equipment is unable to beneficially use the full flow of biogas produced. This is a required safeguard to prevent fugitive emissions from the digester as the hydrogen sulfide in the biogas is odorous and methane is a greenhouse gas.

14 PLANT CONTROL

The operation of all pumps, valves, and other systems will be controlled and monitored by a SCADA system. Data monitoring from all instrumentation and control devices will be available from a central control computer or

remotely via most internet enabled devices with necessary permissions. A messaging system is linked to plant operators' mobile phone numbers or e-mail to alert them to critical alarms.

The SCADA system will be installed on personal computers running the MS Windows 10 ® operating system. The graphical user interface can be navigated and controlled with a mouse or touchscreen cursor (Figure 14-1). Settings may be entered with a physical keyboard or an onscreen keyboard. The SCADA computers in the operator control room will have multiple monitors to view different processes simultaneously. Local control terminals may be installed throughout the facility as needed. Operators may also access the control system from WiFi capable tablets.

Relevant process control data is trended and recorded and viewable from the plant SCADA. Examples of trended process parameters are tank hydraulic levels, biogas storage volume, tank temperatures, and biogas pressure. Accumulated motor run times for each piece of equipment is recorded and displayed to anticipate and schedule planned maintenance.

Process data will be recorded in a database, typically at 1-minute intervals. Reporting software will be configured to summarize the process data for operational decision making and performance monitoring. The reports will be updated automatically according to operational requirements. The reports will be exported as native Excel files and published to PDF format.

Allen-Bradley components will form the backbone of the industrial control system. The master plant PLC will be a Control Logix or Compact Logix Programmable Logic Controller and the primary operator interface will be run on a FactoryTalk platform. Some equipment within the plant may utilize stand-alone PLCs in the same family, but will all communicate on the same Ethernet TCP/IP network.

Remote input/output (I/O) racks are used throughout the facility for discrete equipment or process areas. Distributed I/O simplifies wiring logistics, reduces installation cost, creates system redundancy, and simplifies the troubleshooting process as compared to a centralized I/O strategy. I/O panels operate on the common control network and also communicate using Ethernet TCP/IP.

Plant electrical schematics are integrated into a unified package and follow common drawing standards and formatting. AOE directs the design and engineering of electrical cabinets and controls for all plant equipment making plant documentation uniform and simple for plant maintenance personnel. Common cabinet and panel control wiring standards are followed throughout the facility.

The gas upgrading PSA system will have a separate SCADA provided by the equipment manufacturer. The system will be controlled by a stand-alone Allen-Bradley PLC. Some of the basic data from the gas upgrade PLC will be read and displayed on the Plant SCADA. The operator interface is customized for each plant and designed for clarity and user-friendliness.

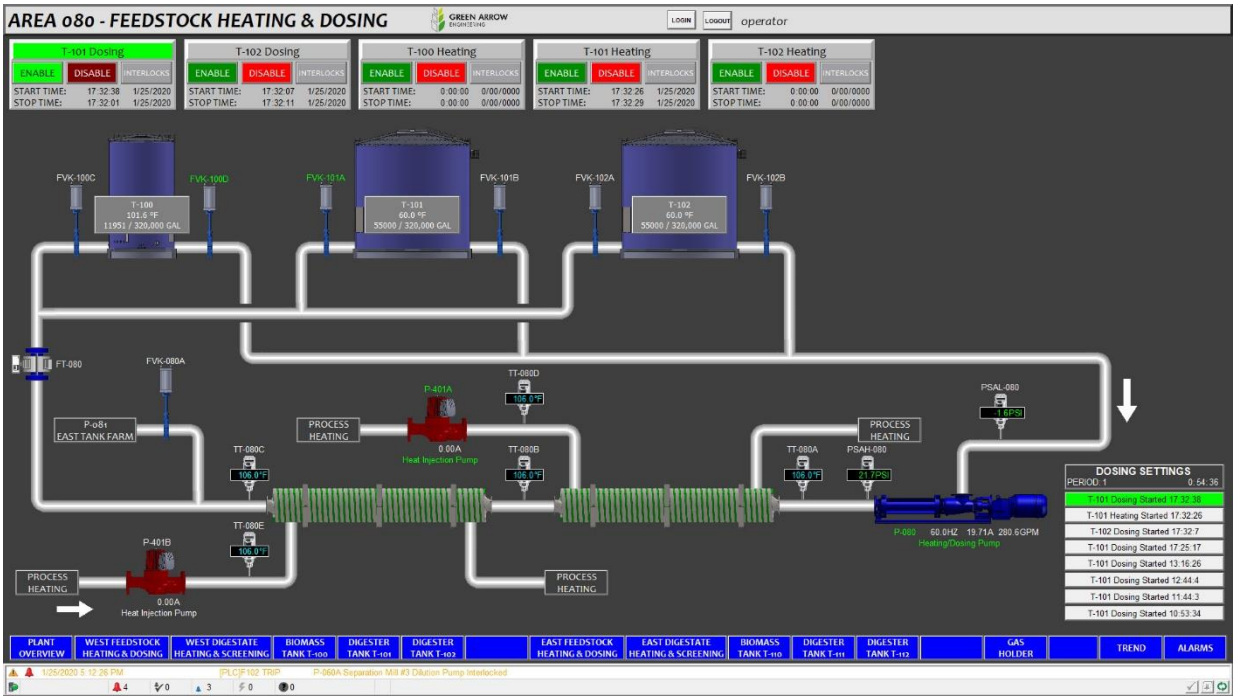

Figure 14-1: Feedstock Heating and Dosing SCADA control screen example

15 COMMISSIONING

15.1 ANAEROBIC SYSTEM, BIOLOGICAL COMMISSIOING

The facility will seek to procure seed digestate from an active anaerobic digester in the region. The seed digestate serves as the inoculum, as it contains a high concentration of the proper beneficial bacteria needed in the anaerobic digester. The project will truck a minimum of 125,000 gallons of seed digestate from one or more facilities. Since anaerobic digesters are typically found at wastewater treatment plants, the seed digestate will likely be sourced from a municipal treatment facility.

This volume of seed digestate can be hauled to the facility over a 2 to 3 day period, depending on the transportation distance and handling time and the number of trucks. Most semi-tankers can haul 6,000 gallons of digestate at legal gross vehicle weights. Haulers will need to make 21 trips to bring 125,000 gallons of sludge to the Green Era facility. Table 15-1 below illustrates that this task can be completed in 2 to 3 days with drivers hauling for no more than 8 hours per day. Commercial drivers in Illinois are permitted to drive for up to 10 consecutive hours after 8 hours off. Assuming 8 hours per day of traveling between Green Era and the donor digester plant, this schedule allows drivers up to 1.0 hours each way travel from their home terminal to the plant. If the haulers have sleeper berths, additional loads could be completed each day. The routes should be planned so that seed digestate is not stored in a tanker overnight. Digestate should be loaded at the donor facility and brought directly to Green Era. This will help maintain the digestate temperature and also mitigate the risk for the digestate foaming out of the tanker hatch when allowed to sit for extended periods.

The Stickney Water Reclamation Facility operated by the Metropolitan Water Reclamation Department (MWRD) could provide Class B seed digestate from their municipal digesters. This is a 30 to 40 minute drive in City traffic. MWRD does produce an exceptional quality biosolid cake product, but the pathogen reduction is achieved after dewatering through windrow composting or through heated drying and pelletizing. The Calumet Water Reclamation Plant on the south side may also provide Class B digestate. This is a 15 to 20 minute drive from Green Era.

If seed sludge cannot be obtained from a Chicago-area municipal digester, there are several farm based digesters in Newton County Indiana that are about 60 to 80 miles from the Green Era facility. Obtaining seed digestate from one of these farms would require up to 4 hour round trip times including loading and unloading.

No. Trucks	Avg. Round Trip Hours	Loads per Day per Truck	Days to Complete
2	1.5	5	2.1
2	2	4	2.6
3	1.5	5	1.4
3	2	4	1.8
3	2.5	3	2.3
3	3	2.5	2.8
4	2	4	1.3
4	3	2.5	2.1
4	4	2	2.6

Table 15-1: Seed Digestate Transportation Time

The seed digestate will be gravity drained from the tankers to the in-ground receiving tanks and then pumped to the 320,000 gallon biomass tank. This biomass tank will initially be used as a digester, since it is better suited to handle the low initial volume of seed digestate. The agitator in the biomass tank is designed to efficiently mix from a minimum level of 40,000 gallons up to the full storage volume. The digestate will be circulated through the external heat exchanger to maintain the ideal system temperature of 125° Fahrenheit.

The facility will receive and store feedstock during the commissioning phase to feed the digesters, enabling the growth and accumulation of bacterial populations. Pumpable feedstock, such as FOG, will be sourced and used to initially feed the digester during the seeding stage. The feedstock will be initially be stored in the in-ground receiving tanks and dosed directly from these tanks to the biomass tank. Once the biomass tank is operating above a capacity of 300,000 gallons, the digestate may be pumped to the digester. The biomass tank will then be returned to service as a feedstock tank.

Feedstock will be dosed at regular intervals to the digester. The dosage rate will be dependent on the volume of digestate in the tank and the caloric density of the feedstock. Typically, 3,000 to 5,000 gallons of feedstock per day will be dosed per 100,000 gallons of digestate volume. As feedstock is dosed to the initial seed digestate, the volume of liquid in the digester will increase and allow for more bacterial growth, and consequently, increasing levels of feedstock can be dosed to the system. The greater the volume of seed digestate that can be economically obtained, the more quickly the biological system can be commissioned. The rate of increase in digestate volume is ideally an exponential function.

During the early stages of commissioning, the digester health is monitored closely for signs of stress. The level of volatile fatty acids is checked daily and compared to the alkalinity of the system, which provides a measure of the

system's ability to convert the carbon in the feedstock to methane. An accumulation of fatty acids in the digestate signals to the operator that the feedstock dosage rate should be reduced. If too much acid accumulates in the system, the digestate will turn sour, similar to the sour stomach that humans experience when they overeat. This test can be performed at the onsite laboratory. In addition, temperature, pH, biogas quality, and biogas quantity will also be monitored.

Biogas will be drawn off the tank and either burned in the biogas boiler as needed or flared until sufficient volume is produced to support the operation of a boiler at 50% load.

The control system will allow the use of the biomass tank as a digester and will automatically control the tank temperature and feedstock dosing.

The time period required to fill the system will be dependent on the initial seed digestate volume, the caloric density of the feedstock, and the availability of feedstock. If starting with an initial volume of 125,000 gallons, and utilizing average feedstock quality that allows feeding for an average 30 day hydraulic retention time, the plant would be hydraulically full in about 80 days. Since the dewatering operation will remove digestate from the system to test equipment and polymer chemistry prior to reaching full capacity, the commissioning period will be somewhat extended.

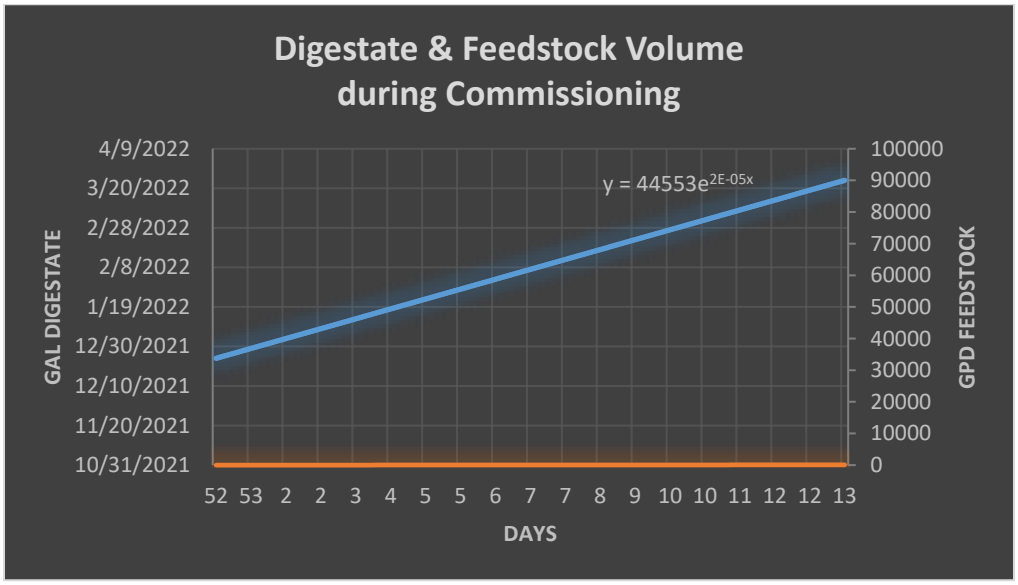

Table 15-2: Digestate and Feedstock Volume during Commissioning

15.2 FEEDSTOCK SORTING / PRE-PROCESSING

Feedstock processing equipment and receiving will be commissioned in parallel with the anaerobic system. The liquid handling pumps and macerators will be used to receive and transfer pumpable wastes as well as the seed digestate. These will be used on a daily basis.

Within the first two weeks of receiving seed sludge, source-separated organics from grocery stores, which contains less than 2% average non-digestible material may be used to commission the separation mills. These organics will augment the pumpable feedstock being received during the commissioning period. The ability to accept SSO during this initial period will be constrained by the use of the feedstock tank as the primary digester. Material processed through the mills will need to either be directly fed to the biomass tank or diverted to the below grade receiving tanks. The plant will feed about 220,000 gallons of feedstock during the first 30 days of commissioning. This is an average of 7,345 gallons per day or just over one tanker load per day and could be

supplied entirely by pumpable feedstock or FOG loads. After the fourth week of commissioning, the digestate volume will exceed 300,000 gallons and material will be transferred from the biomass tank to the digester tank. This will open up the volume in the biomass tank to store additional processed feedstock.

After the 6th week of commissioning, regular quantities of material could be processed daily, when an average of 15,000 gallons per day of feedstock will be dosed to the anaerobic system. Material could be received on a limited basis and processed two days per week, Wednesday and Friday, for 4 hours per day. This will provide an early opportunity to run the receiving equipment at full capacity of 15 tons per hour for short periods to test equipment and train employees. This will require coordination between the generators, haulers, and the commissioning team so that the facility can process enough waste to runoff the equipment, but not so much that it outpaces the digester capacity during start-up. The biomass tank can store over 300,000 gallons of feedstock and this volume will be utilized to balance the waste received with the feedstock needed so the facility can accept regular customers during the commissioning period. The logistics planning during the commissioning period will be led by the plant manager.

15.3 DEWATERING

Limited dewatering trials can be conducted after the 8th week of commissioning. The digestate volume will be around 1,000,000 gallons and the biology should have acclimated to the feedstock blend. The digestate composition should be representative of the quality expected during full loading conditions. This is important in determining polymer suitability and dewatering characteristics. The belt filter press could be operated two days per week, for eight hours per day. The press will process about 70 gallons per minute or 4,200 gallons per hour of 5.5% TS digestate. This will provide sufficient volume to test cake handling equipment, polymer chemistry, and produce some filtrate for feedstock dilution. Operating on this schedule, the facility will dewater over 67,000 gallons of digestate per week. Removing this volume of digestate at this stage will not significantly lengthen the anaerobic commissioning period.

15.4 GENERAL EQUIPMENT AND PROCESS COMMISSIONING PROCEDURE

Checklists will be used to verify functional and safety checks are performed on all equipment and systems. The checklists may be provided by the equipment or system provider or developed by the plant engineer and control integrator. Equipment and equipment systems will not be accepted until all functional and safety checks have been performed and are shown to meet the given performance metrics. Equipment acceptance will be jointly given by the plant manager and the plant engineer. Equipment may be conditionally accepted, even if it did not meet all performance metrics, provided that an action plan is agreed to between the supplier and plant manager to address the deficiency. Electronic copies of the commissioning check lists will be kept on file at the facility.

Typically all equipment will be commissioned by a team consisting of the control engineer, process engineer, and a maintenance technician. Some functions/features may be tested at different times. Motor rotation, lubrication, alignment/set-up may be performed shortly after installation. But performance checks may be completed at a later date dependent on material availability and dependency on other systems. When partial checks are performed, that work will be documented, dated, and signed off by task in the checklist.

Since this facility will utilize custom automation, the control system integrator and process engineer will write detailed functional checks for each automation step. This is developed along with the control strategy and process narrative for each function. All I/O points are tested for correct function and handling within the software. Displayed values are checked for accuracy and precision against the actual instrument value or observed condition. As an example, a proximity switch reading a knife gate valve position is checked that it indicates correctly in the closed position. The proximity state can be observed by an indicator LED on the sensor. This check verifies that the sensor is positioned correctly, that the solid state hardware is functioning, and that sensor has power. Then the input is cross checked in the PLC program to confirm the current state is being read, that the value is being assigned to the correct control variable, and that the valve is labeled consistently on the user

interface. If the input is used in further software functions, those functions are checked. A safety function that does not permit the valve to open if another input is active is verified by activating the other permission. These direct functions and software/automation functions will be enumerated in the commissioning checklist.

16 OPERATIONAL MONITORING

The plant control system allows for any measured and displayed value to be logged and trended, which can be very useful in the operation of the biogas plant. In addition to automatic electronic logging, the plant operators will keep operational logbooks or separate Excel data sheets where they will be required to manually record different parameters with regular frequency. This discipline ensures that the operators are actively monitoring process parameters so that they might recognize changes in the system outside of the normal variation. The plant operators may avert potential problems and conditions by applying logic to the interpretation of data that the control system may not be programmed to recognize.

Many of the automatic plant functions also have a variety of set-points that may be adjusted by the operators or plant engineer. Each process will have an accompanying setting sheet where set-point values and operating conditions can be recorded. As an example, the separation hammer mills that are used to separate packaging from the organic fraction will have a variety of settings. The operator will be able to adjust the auger speed for the infeed conveyor, the dilution pump speed, and the wash water cycle frequency. These settings will affect the performance of the machine in terms of throughput, non-digestible material level in the pulped organics, cleanliness of the waste packaging, and the total solids of the pulped waste. Operators will receive continuous feedback signals including motor loads and line pressures. Totalizers will assist in determining total gallons pumped. The feed hopper may also have load cells to determine the solids processing rate in terms of tons per hour. If the main drive motor load is seen to be increasing, the auger speed can be reduced and or the dilution pump speed can be increased. The control system will be used to automatically trim the feeding rate within the limits defined by the operator. Total solids measurements for the thick pulp cannot be performed in real-time. The operator will need to sample and test the material so s/he becomes familiar with how the TS correlates to the viscosity/thickness of the product. The operator will record these settings so that the process can be optimized for the different feedstock compositions that this plant may receive. Overtime, the throughput and efficiency of the machine will inevitably decrease. Careful monitoring of the operational set points will inform the operator of the reduced throughput indicating that the hammers are worn and need to be changed. By analyzing the historical data, the plant engineer and operators can predict when the hammers will need replaced based on operating hours and the rate of efficiency loss.

Supervising plant operators will be asked to walk the plant once per shift. They will visually and physically check the condition of equipment and piping systems in all areas of the main process building, the tank farm, and the gas upgrading building. Since many functions of the plant are fully automated, much of the equipment is easy to ignore. By enforcing plant walk-throughs the staff will become familiar with normal operating conditions of the equipment and can quickly recognize problems. Bearing failures can usually be heard before catastrophically failing. Weeping valve or pump packing can be seen early. Loose drive belts can be heard. Excessive vibration can be recognized. Additionally, once per day, usually on third shift, the shift leader will visually inspect the digester tanks for foam and other observable conditions within the digester. The digester headspace can be viewed through porthole windows at the tank stair landings.

Equipment maintenance and repairs will be noted in the plant log book along with operating hours on the machine. In addition, separate equipment maintenance logs will be kept for each machine and serve as an essential component of the preventative maintenance program. The plant engineer along with maintenance staff will be responsible for updating the maintenance logs and for the scheduling and planning of facility and equipment maintenance. The plant engineer will summarize each major maintenance event throughout the year for the annual operational report.

16.1 ANAEROBIC PROCESS MONITORING

16.1.1 MICROBIOLOGY

Maintaining the health and stability of the anaerobic digester system is critical to the successful operation of this facility. For facility operators, caring for a digester can be a similar experience to caring for a newborn.

New parents care for the health of their babies by careful and frequent observation, by regular feedings, by burping them when needed, by changing diapers often, and by monitoring and controlling their environment so they are not too cold and not too warm. Successful digester operators also make frequent observations, feed regularly and collect biogas as it is produced, dewater digestate as needed, and carefully control the digester temperature.

Parents track their child's growth by recording measured weight and height. Digester operators track feeding volume and feed quality, gas quality and quantity, digester temperature, and several other parameters.

If a newborn is sick, parents can measure their child's body temperature at home, but a trained physician can also evaluate the baby's health by taking multiple measurements using a variety of laboratory tests. If a digester is sick, plant operators can send samples of the digestate to an outside lab for analytic testing.

In some ways caring for a digester is simpler than caring for a baby. If a baby needs attention, s/he can cry. If a digester needs attention, the operator receives a text message that explains what is wrong.

The biological process of converting the carbon in feedstock to methane gas is outlined in *Figure 16-1*. Anaerobic digestion occurs in 4 steps. In the first phase, the food waste is hydrolyzed by bacteria; carbohydrates, fats and proteins are broken down with water into simple organic compounds such as sugars. This step mainly occurs within the biomass tank and can proceed quickly depending on the waste, even within hours. In the next step, called acidogenesis, the hydrolyzed organic compounds are acidified by bacteria, forming volatile fatty acids (VFA). This step also occurs to a certain degree within the biomass tank. The biomass tank contents will often be acidic, operating around a pH of 3 to 4 and the feedstock will have a sour odor, reminiscent of vomit or vinegar. The fatty acids are then converted to acetic acid and carbon dioxide. The acetate forming bacteria are slow growers and usually have a reproduction time longer than 3 days. The conversion to acetate is often the rate limiting step in the breakdown of food waste to methane. The formation of fatty acids can outpace the acetate-forming bacteria. Finally the methanogen bacteria consume the acetic acid to form methane. The methane-forming bacteria also have a very slow growth rate, in excess of 3 days. These bacteria are very sensitive to changes in their environment.

If a problem occurs in one step of the bacterial food chain, the whole process will slow down or stop. But with the knowledge of how the process works, the plant operator can monitor the inventory of intermediate products to determine if one group of bacteria is stressed and then take steps to correct the problem.

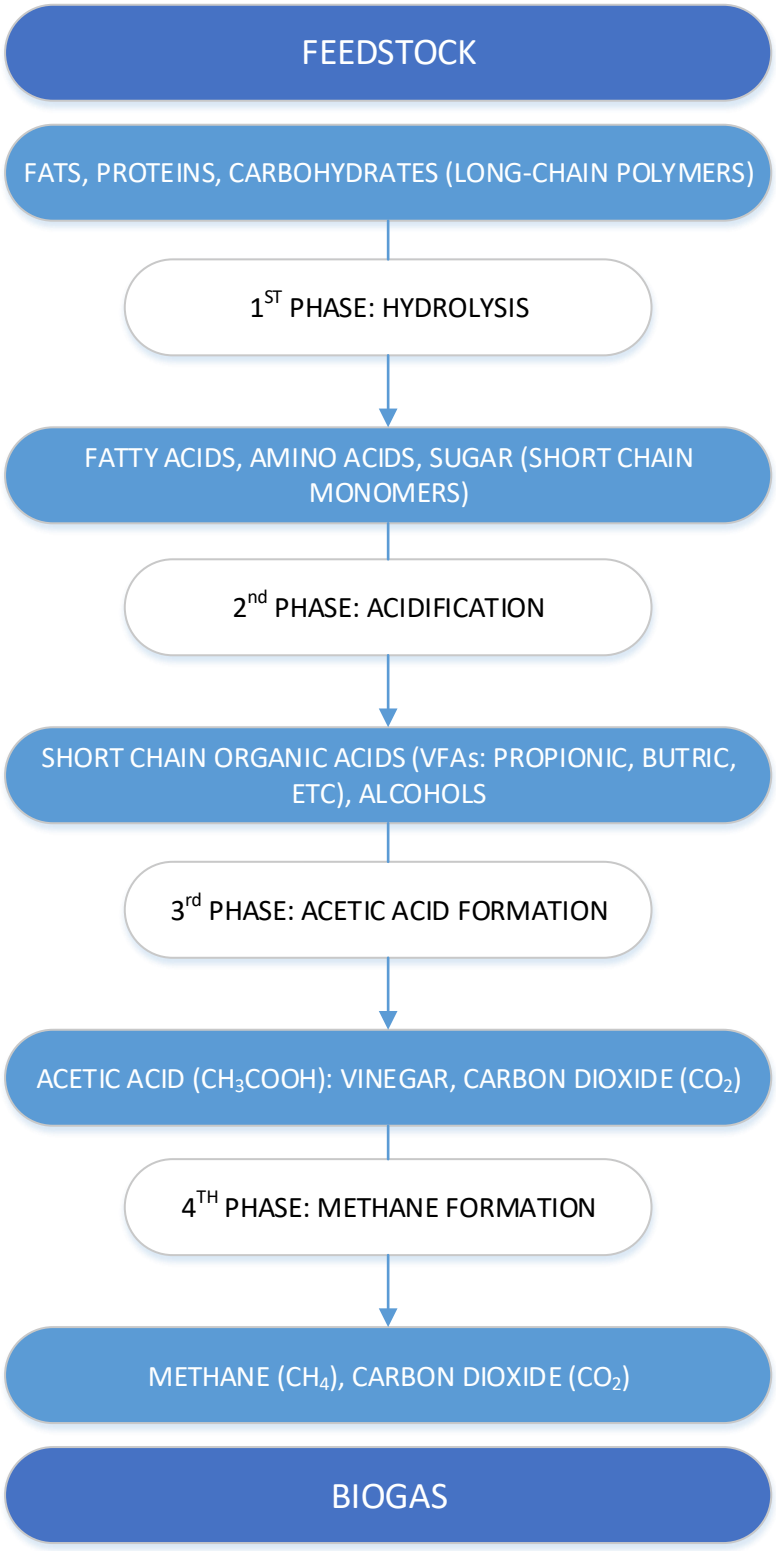

Figure 16-1: Digestion Process (Adapted from Biogas, An Introduction 2013; biogas.fnr.de)

16.1.1.1 OPERATOR TRAINING IN DIGESTER BIOLOGY

All operators responsible for setting and controlling the anaerobic system will be trained in the basic biological process of anaerobic digestion and common causes for process upset. In this way, operators will understand why careful monitoring and control of the process parameters is important and how the parameters are used to inform operational decisions. In addition, the plant manager and the plant engineer will be provided in-depth instruction regarding the digestion process, troubleshooting, and corrective actions. They are ultimately responsible for the facility throughput and uptime.

16.1.1.2 WHY PROCESS MONITORING IS IMPORTANT

The digestion system for this facility is designed to treat food waste. Since the waste composition is unique to every facility of this type and biological systems are inherently diverse, it is important to establish baseline values for critical process parameters. By recording and trending process parameters throughout the operation of the plant, deviations outside the normal value range can be promptly recognized. These deviations provide plant operators an early warning about changes occurring within the biological system, which left unchecked could cause process instability or upset. If biological upset occurs, the system will not be able to process the normal quantity of feedstock until a healthy biology is reestablished. The minimum impact will be revenue loss from unrealized tipping fees and reduced biogas production. Depending on the cause of the upset, digester biology can take anywhere from 3 to 12 weeks to recover and stabilize. In cases of full biological collapse, digesters may need to be reseeded with healthy anaerobic digestate from another facility. The time and costs associated with basic process monitoring far outweigh the lost time and revenue from a biological upset.

16.1.1.3 COMMON CAUSES FOR DIGESTION INSTABILITY OR UPSET

16.1.1.3.1 OVERFEEDING

A common cause for digester upset is simply overfeeding. This is usually caused by changes in the feedstock. Consider the difference between eating 4 carrot sticks versus 4 candy bars. The candy bars provide far more calories than the carrots and the sugars in the candy bar can be digested much more quickly than the fiber in the carrots. Similar scenarios are common to digesters that accept food waste. The plant operator must be aware of what feedstock is being received. Regular COD measurements of the feedstock will alert the operator to changes in the feedstock caloric density.

Complete mixing or circulation of floating layers in the tank can also lead to overfeeding. Oils and other low density organic compounds have a tendency to accumulate at the top of the tank, just like poorly emulsified salad dressing. If the floating layer is mixed back into the tank, bacteria have a chance to continue to break down these fats. The rapid reincorporation of a floating layer can result in overfeeding. The condition can be avoided by keeping the tanks well-mixed all the time. The vertical mixers in the digester has an impeller near the top of the tank that prevents floating layers from forming. The biomass tank vertical mixer has impellers at multiple elevations to keep the contents will mixed, independent of the tank liquid level. With these measures in place, the operators should be aware that floating layers can easily form if the tank mixers are out of service.

16.1.1.3.2 HYDRAULIC OVERLOAD

Some municipal digesters that operate with very low solids content of just 1 to 2% can experience hydraulic overload. The condition occurs when the hydraulic volume pumped through the digester does not provide enough time for the anaerobic bacteria to reproduce and grow; the bacteria are washed out with the digestate. Hydraulic retention time (HRT) is a term used to quantify hydraulic loading. HRT is calculated as the operating tank volume divided by the average volume of digestate pumped out of the tank per day. For the feedstock that this facility will accept, hydraulic overload should not be an issue. For the complete mix digesters that this facility operates, bacteria washout could only occur with hydraulic retention times of less than 15 days. The facility is designed with

a hydraulic retention time in excess of 30 days at full loading. The long retention time allows for a more complete breakdown of the organics in the feedstock and provides a high level of process stability.

16.1.1.3.3 TEMPERATURE VARIATION

The digester temperature will be maintained at or around 125° F. At this temperature, 'thermophilic' type anaerobic bacteria are naturally favored and will prosper. The complete digester biology will become acclimated to this temperature and will perform best when the digestate temperature is held within a few degrees of this set-point. Sudden changes in temperature can 'shock' the system. To prevent thermal shock, the facility is designed with a robust and proven heating system.

Feedstock will be preheated through external heat exchangers in the piping system as it is dosed to the digester. The operator can choose to enable or disable the heating functions for each tank. When the heating function is enabled, the plant PLC will automatically compare the digester temperature to the set-point to determine if the tank needs additional heat. If heat is needed, the PLC will switch on the hot water circulation pumps to the heat exchangers during feedstock dosing. The plant operator can also enable direct in-tank heating for both the feedstock tank and the digester tank using stainless heating pipes that are looped on the inside tank walls. The PLC will automatically evaluate and prioritize which tanks to heat. When digestate is heated through the external heat exchanger, the temperature at the outlet of the heat exchangers is limited to 145° to prevent shocking the bacteria in the circulated digestate. This method of heating will maintain the tank temperatures within 2 degrees of the set-point. The biomass tanks can also be heated through circulation. This is typically done during the winter to maintain the temperature above 110° F. The biomass tank could be operated much colder, but this would require a higher peak energy load during dosing and consequently additional heat exchanger area. Boilers will be fired with natural gas to provide hot water for the plant. Since the boilers are the only available heat source for this facility, the boilers will be sized so each one could satisfy the full heat demand of the plant.

16.1.1.3.4 AMMONIA INHIBITION

As proteins are broken down by the bacterial process ammonium (NH4) is formed from the nitrogen. The conversion makes the nitrogen readily available to plants when the digestate is used as a fertilizer, but it also can be toxic to the anaerobic bacteria if the level of 'free ammonia' is too high. Ammonia exists in two forms in the digestate as either ammonium ions (NH_4^+) or as free ammonia ($NH_{3(aq)}$). With increasing temperature and pH, the percentage of free ammonia increases in the digestate. This facility takes full advantage of that property to recover ammonia from the treated digestate after dewatering. But in the digester, free ammonia has been shown to cause process upsets. The biggest risk to upset is if relatively high nitrogen feedstock is introduced to the digester without providing adequate time for the bacteria to acclimate. Anaerobic bacteria are adaptable to a range of different operating conditions, including high nitrogen, but since they are slow growers, the bacteria must be given sufficient time to evolve. Since this facility will mostly process the organic fraction of SSOW, large rapid swings in the nitrogen content of the feedstock are not expected. However, the plant manager and operators should be aware of this issue should a high-volume commercial waste stream become available with higher nitrogen content than the food waste. This facility expects to operate between 3,000 and 5,000 PPM of ammonia in the digestate. Total ammonia concentrations above 3,000 PPM can start to cause stability issues, although with proper system management, some digesters are operated stably above 5,000 PPM ammonia.

16.1.1.3.5 TRACE NUTRIENT DEFICIENCY

The same way that humans and animals need vitamins and minerals in their diet to stay healthy, anaerobic bacteria also require trace minerals. *Bacteria do not live on bread alone*. The lack of necessary trace elements will limit the rate of digestion and can lead to process instability. Surprisingly, SSOW does not always contain a sufficient concentration of trace elements to promote digestion. A 2010 British study found that the food waste was deficient in cobalt and selenium (WRAP WR0212). Many other trace elements are also needed. Significant nutrient needs are listed in *Table 16-1* below.

Nutrient	Micronutrient	Macronutrient	Min. Recommended (% of COD)
Cobalt	X		0.01
Iron	X		0.2
Nickel	X		0.001
Nitrogen		X	3-4
Phosphorus		X	0.5-1
Sulfur	X		0.2

Table 16-1: Nutrient Requirements for Anaerobic Digestion (Microbiology of Anaerobic Digesters, Gerardi, 2003)

Nutrient concentrations can be measured in the digestate by an outside laboratory so that individual nutrients can be added to the digester. Basic mineral mixtures can also safely be dosed to the digester as a preventative measure without testing. This is equivalent to taking a multivitamin supplement. Operators are cautioned not to exceed recommended dosages as some nutrients can also be toxic to the bacteria in high concentrations. A number of companies in Germany specialize in digester nutrition and sell generic and customized blends of minerals. They serve digester owners in the same way animal nutritionists service farmers in recommending the proper feed blends for livestock. This facility plans to either engage with a European company or work in conjunction with a local university to develop a custom recipe that can be blended by local animal feedmills.

16.1.2 AD PROCESS MONITORING PARAMETERS

Key Process Indicators (KPIs) include system inputs, system outputs, and measured system variables/properties. All KPI values can be influenced by operational decisions and are also used to inform operational decision making. Understanding how operational decisions will affect the plant and digester biology are foundational to stable and consistent system performance and optimization.

16.1.2.1 FEEDSTOCK CHACTERISTICS AND QUANTITY

Feedstock for this facility and for any anaerobic system can be characterized by energy density, digestibility, and nutrient content. Since this facility will primarily process source separated food waste, the overall feedstock composition should be relatively consistent. Many tests can be performed to help operators understand how a feedstock will react in the anaerobic system and how much biogas is likely to be produced. Major feedstock types have already been extensively tested in labs and compared with performance in commercial scale systems. Published data is readily available. Plant operators should understand how these tests are performed so that they can interpret and beneficially apply the results and findings of the studies to their plant.

16.1.2.1.1 MEASURING ENERGY DENSITY OF FEEDSTOCK

All feedstock is primarily composed of water. Even non-pumpable feedstock, such as vegetable waste, is still mostly water. When engineers talk about the amount of water in a feedstock, they usually give the percentage of the feedstock that *isn't* water, as *percent total solids*. The percent total solids is determined by evaporating all the

water from a sample and weighing what is left. The ratio of the residual weight to the original weight of the sample is the percent total solids. In practice, a few ounces of material is dehydrated in a low oven (212°F) for 24 hours. If the dehydrated sample is returned to a lab oven and the temperature is increased to over 900°F, the rest of the organic matter will be incinerated. The difference between the dry weight of the sample and the weight of the ash that remains divided by the original dry mass of the sample is the *percent volatile solids* of the *total solids*. Determining the percent total solids and the percent volatile solids is useful when evaluating 'solid' feedstock that is similar to other known reference feedstock. This comparison can predict how much carbon in the feedstock is available to be converted to biogas. The typical TS percentage of the blended feedstock is expected to range from 12 to 14%. The typical VS percentage will range from 85-90%.

The measurements can also be misleading. Anaerobic bacteria are only able to decompose certain carbon compounds. If the carbon is in the form of plant lignin, or woody biomass, the anaerobic bacteria cannot break down the structure during hydrolysis. So where wood will decompose in the aerobic conditions of a compost pile, wood will not breakdown in a digester and will not contribute to biogas production. But the volatile solids content of wood is quite high, since the high heat of the oven will readily ash plant lignin. In these cases, biogas methane potential testing is a more useful test.

16.1.2.1.2 BIOGAS METHANE POTENTIAL

The direct method for determining how a feedstock will perform in a digester is to directly test it in a bench scale digester. Laboratory digesters as small as one quart in volume can provide useful insight into the how the anaerobic biology will react to a feedstock and how much biogas could be produced as a result. When using seed sludge from the operating digester, these tests can also very accurately predict how the addition of the new feedstock may react with other feedstock in the plant mixture. This type of test is called biomethane potential (BMP) and a few standard methods have been adopted on how to perform this test. Many state university labs can perform this test or the facility can set-up their own test unit. In practice, a BMP studies only make sense to perform for a completely new feedstock that may contain constituents of concern, such as very high dissolved salt content. Typically these tests need to run for an entire digestion cycle, 20-30 days. This type of test may also be warranted to evaluate the effect of additives/supplements to the digester biology that may claim to improve system performance. The blended feedstock for this facility is expected to produce an average of 12 SCF of biogas at 60% methane per dry pound of volatile solids fed.

16.1.2.1.3 CHEMICAL OXYGEN DEMAND (COD)

Volatile solids (VS) may also be an inaccurate estimate of the available energy in pumpable liquid feedstock such as fats, oils, and grease (FOG) that contain volatile organics (alcohols and fatty acids) which will evaporate with the water. For liquid feedstock, measurement of the chemical oxygen demand (COD) is the preferred method for determining its energy content.

Chemical oxygen demand (COD) is the amount of O_2 consumed per liter of sample when the sample is chemically digested with sulfuric acid and a strong oxidizing agent, such as potassium dichromate. Oxidizable organic compounds react, reducing the dichromate ion ($Cr_2O_7^{2-}$) to green chromic ion (Cr^{3+}). The amount of solute is measured with a colorimetric meter that measures the intensity of light at a certain wavelength that passes through the sample. This test is quite simple and inexpensive to perform at an onsite lab. Several companies make premixed reagents and digestion vials that can be used directly in a colorimeters. The acid digestion time is 2 hours, but multiple samples can be digested at the same time. Operators that are able to make boxed Kraft macaroni and cheese can be trained to perform COD measurement accurately and repeatedly.

The COD of each biomass tank will initially be measured weekly during operation of the facility. The COD of the digestate will initially be measured every two weeks to document adequate destruction of solids in the digesters. COD measurements will also be used to monitor and control the BNR process. Typical expected values for the COD

of blended feedstock at this facility range from 150,000 to 300,000 mg/l. Some commercial food waste may exceed 500,000 mg/l.

16.1.2.1.4 NUTRIENT TESTING

Testing for the total nitrogen content of a feedstock may also be warranted if a new feedstock will compose a large percentage of the overall plant loading. Total Kjeldahl nitrogen (TKN) can be evaluated quickly and inexpensively by an onsite or off-site lab. Prior to accepting a new feedstock, the plant manager along with the plant engineer will make a determination if this test is needed. This facility will have the capability to measure TKN in the onsite laboratory since the measurement is also needed for monitoring of the filtrate treatment process.

Sulfur content can also be of interest. While sulfur is a necessary nutrient for the anaerobic bacteria, an abundance of sulfur can lead to increased production of hydrogen sulfide gas along with methane. Some commercial food waste streams are inherently high in sulfur, such as cabbage and onion waste. Also processing plants will often have produced sludge from their wastewater treatment systems. The composition of the sludge is highly dependent on the food being produced at the facility and how it is being processed.

16.1.2.1.5 FEEDSTOCK DOSING/QUANTITY

The volume of feedstock that is dosed to a digester is the single most important process control that is calculated and set by the plant operator. The maxim, '*you are what you eat*,' is apropos. Biogas production is proportional to the volume of feedstock dosed to the tank. When dosing feedstock that is hydrolyzed and acidified, the volume of biogas produced can be seen to peak shortly after dosing, and then taper off as the bacteria convert the readily available acetic acid to methane. This is analogous to getting an energy boost after eating a sugary snack. If the time between dosing periods is longer than 2 hours this effect is very pronounced. The biogas pressure in the tank headspace will be tracked by the plant SCADA. The storage pressure will determine how much biogas to draw off for upgrading. The moving-average demand will have a saw-tooth profile if biogas production is uneven. To normalize biogas production, this facility will automatically dose feedstock to each tank in 24 equally spaced periods throughout the day, starting every 60 minutes. The operator can choose to reduce the number of dosing periods if the feeding volume is relatively small, such as during commissioning.

The volume of feedstock dosed will be tracked in two ways. The dosing pump used will be a positive displacement progressive cavity style pump. In this type of pump an equal volume of fluid is displaced for each revolution. The desired gallons per minute to pump is set by the plant operator and the PLC will automatically determine how fast to turn the motor. This method is very repeatable, however as the pump wet parts wear over time, the efficiency can decrease. This plant will install magnetic flow meters on both dosing lines to directly measure and totalize the volume of feedstock being dosed. In addition, data from tank level sensors can be used to compare the dosing volume with the requisite level increase in the digester and falling level in the biomass tanks.

16.1.2.1.6 CALCULATING DOSING VOLUME AND ORGANIC LOADING RATE

The COD of the blended feedstock in the biomass tank is measured to determine the energy density of the feedstock. In the same way a person on diet tracks calories, COD, expressed in milligrams per liter, is used to determine the maximum dosing volume to the tank. A person who drinks 3 glasses of water while eating a hot dog will take on the same number of calories as someone who only eats the hot dog. Yet, the person who drank the water will have ingested more than three times the volume than the person who only ate the hot dog.

The organic loading rate (OLR) is the amount of available carbon (either as COD or VS) dosed per volume of digestate per unit time. The OLR is the digester equivalent of adult dietary guidelines for caloric intake based on body height and weight. It is evident that a petite 90 pound woman only needs a fraction of the calories as a 300 pound defensive lineman. In the same way, a million gallon digester has the potential to degrade twice as many tons of carbon as a 500,000 gallon digester.

Typical OLR for complete mix digesters range between 3 and 5 kilograms COD per cubic meter of digester volume per day. To assist the operator in determining the proper dosage, the plant control computer will have an input for the last measured feedstock COD. The PLC will automatically calculate and recommend the volumetric dosage needed for each digester based on the current tank levels and the desired OLR. At some point the OLR will become too high for the anaerobic system and this can be observed by an accumulation of fatty acids in the digestate. The plant manager is responsible for aligning the volume and quality of the procured feedstock with the available digestion capacity.

	Parameter	Frequency	Description
Feedstock	COD	Weekly	Measured by onsite lab.
	Dosing Volume	Online continuous	Record total dosing volume.
	OLR	Weekly/monthly avg.	Calculate based on COD, dosing volume, and digester volume.
	HRT	Weekly/monthly avg.	Calculate based on dosing volume and digester volume, record in log book.
Energy	Biogas Composition	Online, continuous	CH_4, CO_2, O_2, and H_2S
	Electrical load	Online, continuous	Parasitic electric usage for processing equipment
	Biomethane Prod.	Online, continuous	Upgraded gas in SCFM to pipeline. Totalizer for MMSCF.
	Biomethane Composition	Online, continuous	CH_4 and inert gasses as defined in Peoples Gas spec.
	Flare Op. Hours and flow	Online, continuous	Trended and recorded in database for annual reporting.
	Boiler Op. Hours and flow	Online, continuous	Trended and recorded in database for annual reporting.
Digestate	Tank Temperatures	Online, continuous	Digester temperature set-point at 125° F
	Tank Levels	Online, continuous	Needed to calculate HRT and OLR
	COD	Bi-weekly	Measured by onsite lab
	TS	Bi-weekly	Measured by onsite lab
	VFA	Weekly	Measured by onsite lab
	VFA/TIC	Weekly	Measured by onsite lab
	pH	Weekly	Measured by onsite lab
	Ammonia	Bi-weekly	Measured by onsite lab
	Pathogens	Bi-monthly	As required. (Salmonella sp. or Fecal Coliform). Outside lab.
	Metals	Monthly	Measured by IEPA approved lab
Cake Solids	TS	Weekly	Measured by onsite lab
	pH	Monthly	Measured by agronomic lab
	Nitrogen	Monthly	Measured by agronomic lab (TKN, NH3) calc. ON, PAN
	Phosphorous	Monthly	Measured by agronomic lab (TP, report as P2O5)
	Metals	Monthly	Measured by agronomic lab (incl. K, report as K2O)

Table 16-2: Testing Frequency of Selected Parameters

16.1.2.2 BIOGAS PRODUCTION AND QUALITY

Monitoring the production of biogas the biogas composition can inform the operator about changes in the biological process. The biogas production can be indirectly determined by the operating load of the biogas upgrading equipment. The mass flow rate of the upgraded biogas will be directly measured as well as the mass flow rate of the raw biogas into the skid. These values will be directly shown and trended on the plant SCADA and recorded in a database for periodic reporting.

The percentage of methane in biogas quality can vary from 50 to 70%. Having an online analyzer to monitor the biogas composition is useful in seeing changes in the process biology or the effect of different feedstock. This facility will use meters that measure the percentage of methane, carbon dioxide, oxygen, and hydrogen sulfide in the biogas. The values will be displayed on the plant control computer and trended. Infrared measurement sensors will be used to determine the percentage methane and carbon dioxide in the gas. This type of sensor is very stable and has an indefinite service life when recalibrated. The oxygen and hydrogen sulfide concentrations are determined by electrochemical sensors and will require replacement about every 3 years.

Hydrolysis and acidogeneis can proceed at a much faster rate in the biomass tanks than methanogensis in the digesters. When feedstock is received during the day, an increase in biogas production and a decrease in quality is often observed. The rapid production of CO2 from the fresh feedstock dilutes the methane being produced in the digesters. The gas upgrade controller must automatically compensate for the changing fuel value of the biogas by adjusting process parameters to maintain the RNG output quality.

16.1.2.3 DIGESTION TEMPERATURE

Tank temperatures are continually monitored on the SCADA system and historically trended. Real-time temperature measurements are also displayed for the inlet and outlet of the digestate heat exchangers. Operators will be asked to record inlet and outlet temperatures for the heat exchangers and the pump settings in a log book so that any changes in heat exchanger performance over time can be recognized. A decrease in efficiency could be caused by a blockage or fouling of the heat exchanger surfaces or by a loss in pumping capacity for either the hot water or digestate.

The set-points and hysteresis for biomass tank and digester temperatures may be changed by the plant operator from the plant control computer. The operator may manually choose which tank or set of tanks are to be heated or allow the PLC program to automatically prioritize heating demand.

16.1.2.4 VOLATILE FATTY ACIDS (VFA)

The total level of VFAs in the digestate serve as a good indicator of the health of the system and can be used to predict if a process upset is likely to occur. The plant operator will monitor the total VFA concentration in the digestate, including acetic acid. If the acid level in the tank increases, the plant operator knows that the digester is being overfed and that the methane-forming bacteria need a chance to finish eating all the leftover food. If the system continues to be overfed, the acids can accumulate to a level that will inhibit methane formation, and the tank will sour. The digestate will develop a distinct odor from the accumulation of fatty acids.

The VFA test will not directly point to the cause of the problem. The plant operator will need to evaluate the other recorded process parameters to determine the cause of the issue. Similar to when one experiences an ‘upset stomach’, some self-reflection is needed as to whether the upset stomach was caused by something that was eaten that was ‘indigestible’, a bacterial infection, or maybe simply from overeating.

16.1.2.5 ALKALINITY RATIO

The buffering capacity of a digester is the ability of the system to accumulate acid without causing a precipitous decrease in the system pH. It is important to maintain buffering capacity because if the digester pH drops much below the neutral pH of 7, the metabolism of the methane-producing bacteria is slowed causing the build-up of

even more acid, until eventually all methane production ceases. Alkaline substances buffer acid. An example of a common alkaline product is baking soda, or calcium carbonate. An example of a common acid is vinegar, which is diluted acetic acid.

The alkalinity ratio is the ratio of volatile fatty acids to the bicarbonate alkalinity. The alkalinity ratio will be easy to determine at the facility's onsite lab and only requires one additional titration step compared to the method for measuring the VFA level. A Mettler-Toledo automatic titrator system will be purchased for the lab to ensure repeatable results with minimal labor.

The digestate is filtered to remove large suspended solids. 5 grams of the filtrate is diluted with 50mL of deionized water. The sample is titrated to pH 5.0 using 0.1 N sulfuric acid. The bicarbonate alkalinity or total inorganic carbon (TIC) is calculated as $CaCO_3$. An additional titration step from 5.0 to 4.4 provides the level of total organic acids in the sample. The calculation can be performed directly within the titration controller, which will output the values when finished. The ratio is sometimes expressed as VFA/TIC.

$$VFA/TIC = [(B*4*1.66)-0.15]*500/A$$

Where A =TIC -> Volume of added acid until pH 5.0 in mL and B -> Volume of added acid from pH 5.0 to 4.4

VFA/TIC will range from 0.1 to 0.8 for stable anaerobic systems. Starting pH of the digestate sample will also be noted and recorded by the operator. VFA levels with this method will typically range from 1,000 to 4,000 mg/l for stable processes. These values have wide ranges and are difficult to compare between different facilities due to natural variation in feedstock and digester biology. But once baseline values are established for healthy and stable operation at this facility, deviation from the average values can serve as an early indicator of biological process changes occurring in the system that may not be apparent from other parameters such as biogas production. This type of test is analogous to blood pressure monitoring. High blood pressure may not be apparent from a patient's outward physical health, but over time can damage the heart, kidneys, and other organs. Likewise, high VFA may not cause an issue for the digester right away, but if left unchecked can lead to digester upset.

16.1.2.6 NITROGEN TESTING

Since ammonia can have an inhibitory effect on the anaerobic process it is helpful to track the nitrogen levels in the digestion system. Monthly testing is recommended. Since this facility will be dewatering and discharging filtrate back to the sewer system, periodic TKN testing of the filtrate will likely be required by the discharge permit.

16.1.2.7 PATHOGEN TESTING

Digestate will be tested periodically for the presence of salmonella and/or fecal coliform, in accordance with USEPA methodologies, to determine basic levels. Since the waste received by the facility is food waste and does not contain any sewage, the material is not subject to biosolids classifications. It is helpful to monitor concentrations however to provide information for customers that receive the dewatered solids.

Prior to treatment, food waste should contain a much lower concentration of the salmonella bacteria than would be present in biosolids. Given the long retention time (greater than 30 days) in the proposed digester, the system should operate below the threshold value for Class A product and meet the requirements of Part 360-5.6 (b)(1)(ii).

16.1.2.8 AGRONOMIC VALUE TESTING

The dewatered cake solids will be used for soil amendment or blended with composts. The material will be tested monthly for macro nutrients and trace metals by an outside lab. The agronomic value will be reported in pounds per wet ton of product and the report will be given to customers who purchase the cake solids. Forms of nitrogen will be reported as total kjeldahl nitrogen (TKN), ammonia (NH4), organic nitrogen and plant available nitrogen (PAN). The calculation and use assumptions for PAN will be listed on the report.

16.1.2.9 SAMPLING PROTOCOL

Operators will be trained how to properly sample feedstock, digestate, and cake solids so that accurate and repeatable measurements can be taken. Sample ports are provided in the piping systems so that samples can be conveniently taken within the main building. When sampling digestate, the sample may be drawn from the screening and heating pump loop. If a particular tank is of interest, the operator may select a sampling function from the control system to circulate that individual tank through the heat exchanger for a total duration of 10 minutes. The pump will draw fresh material from that tank into the line to the sample port. The control system will automatically switch back to its preprogrammed function for that pump when the cycle is complete. After allowing the pump to run for 5 minutes, the operator may open the ¾ inch sample valve and draw off at least 1/2 gallon of material into a 5 gallon bucket, ensuring that the sample pipe is cleared of any stagnate liquids. The sample valve is opened again to take the sample. The sample should be clearly labeled with the contents, time, and date. If a sample will not be tested in the lab right away, the sample bottle can be stored under refrigeration until needed. For onsite testing, all samples should be tested within 24 hours of collection. If the sample will be shipped to an offsite lab for testing, the lab may request that additional sample preparation and stabilization is completed before shipment.

Work instructions will be developed and standard protocols will be followed for all onsite laboratory operations. Wastewater testing for belt press filtrate quality will also be completed in the same laboratory in compliance with the sewer discharge permit.

		Value Range	Description
Operational Parameters	Hydraulic Retention Time (HRT)	>20 Days	Stable process that will provide adequate destruction of volatile solids for most feedstock types, assuming the OLR and other parameters are within normal range. Higher retention times will add to process stability and provide a more complete conversion of available carbon to biogas.
		15-20 Days	Borderline retention time for complete mix digesters that may work well for some feedstock types but will fail with others.
		<15 Days	At high risk for bacterial washout with complete mix digester. Other digester types that retain biomass can operate in this regime, but that technology is not applicable to this facility's proposed feedstock and digester design.
	Organic Loading Rate (OLR) kg_{COD}/m^3-day	3-5	Stable range for complete mix digesters.
		5-6	Digesters operating with feedstock blends that are easily digestible could operate in this range.
		>6	High OLR leads to accumulation of VFA in the digester and incomplete conversion of carbon to biogas.
Measured System Parameters	NH_4-N	<3,000 mg/L	Stable range.
		3,000 - 5,000 mg/L	Ammonia concentrations in the range of 3,000 to 5,000 mg/L can cause process instability if not managed correctly. Digesters can operate up to 5,000 mg/L if the ammonia level is increased slowly and the bacteria are given time to adapt to the high nitrogen concentration.
		>5,000 mg/L	Stable digestion can be achieved above 5,000 mg/L for certain feedstock and is dependent on long term biological adaptation, sufficient trace nutrients, and excellent process control for temperature and feeding rates.
	pH	7-8	Typical pH range for digesters.
		<7	If VFAs accumulate to the point that they consume the available buffering capacity of the system, the pH will fall. At pH below 7 the activity of the methanogens that break down the VFAs is reduced, leading to additional accumulation of VFAs and further lowering of the pH with continued feeding.
		>8.5	Digesters can be operated stably above 8.0, although increased alkalinity can lead to process instability. High pH drives the disassociation equilibrium of ammonia (NH_3) and ammonium (NH_4^+). Studies have shown that low levels of aqueous ammonia (NH_3) in the digester can inhibit bacterial cell function.
	Total VFA	<1,000 mg/L	Stable process
		1,000 – 4,000 mg/L	Stable operation is possible in this range. This digester which will accept primarily SSOW will likely operate in this region. The concentration of VFA is normally lower in digesters that process corn silage and other energy crops because hydrolysis of the plant fiber can be the rate limiting step.
		>4,000 mg/L	VFA concentrations above 4,000 usually indicate a problem with the system, especially if the VFA concentration increases rapidly above the normal operational baseline.
	Alkalinity Ratio (VFA/TIC)	<0.3	Generally stable and indicates that the digester could likely be fed at a higher rate.
		0.3-0.8	Reported alkalinity values have a high variation from one biogas plant to the next. A working baseline should be established for this plant.
		>0.8	Indicates that very little buffering capacity is available and that the process is highly susceptible to upset.

Table 16-3: Process Parameter Limits (adapted from Process Monitoring in Biogas Plants, IEA Bioenergy, 2013)

16.2 REFERENCES

Section 16.1.1.3.5 Trace Nutrient Deficiency

Gerardi, Michael H., The Microbiology of Anaerobic Digesters. (2003) John Wiley & Sons, Inc., Hoboken, NJ.

Section 16.1.2.9 Sampling Protocol

Drosg, Bernhard, Process Monitoring in Biogas Plants, (2013) technical brochure, IEA Bioenergy.
(http://www.iea-biogas.net/files/daten-redaktion/download/Technical%20Brochures/Technical%20Brochure%20process_montoring.pdf)

STAFFING PLAN & JOB DESCRIPTIONS
Doc. No. MP-03
Green Era
Organics Recycling Facility

650 W. 83rd Street

Cook County, Chicago, Illinois 60620

Prepared By

Green Arrow Engineering

2759 Long Road

Wooster, OH 44691

REVISION LEVEL	DESCRIPTION	ISSUE DATE
R0	INITIAL RELEASE	10/02/21

Contents

1 Staffing Plan 1

1.1 Org Chart 1

1.2 Estimated Payroll 1

1.3 Scheduling for Shift Coverage 2

2 Job Descriptions 2

2.1 Plant Manager – Reports to Board/Owners 2

2.1.1 Key Responsibilities 2

2.1.2 Experience/Education 3

2.2 Plant Engineer – Reports to Plant Manager 3

2.2.1 Key Responsibilities 3

2.2.2 Experience/Education 4

2.3 Technician Level Operators 4

2.3.1 Key Responsibilities 4

2.3.2 Experience/Education 4

2.4 Maintenance Electrician 5

2.4.1 Key Responsibilities 5

2.4.2 Experience/Education 5

2.5 Maintenance Mechnaic 5

2.5.1 Key Responsibilities: 5

2.5.2 Experience/Education 6

2.6 Purchasing/Feedstock Procurement – reports to plant manager 6

2.6.1 Key Responsibilities 6

2.6.2 Experience/Education 7

2.7 Accounting Manager / Controller – reports to plant manager 7

2.7.1 Key Responsibilities 7

2.7.2 Experience/Education 7

2.8 Office Assistant – reports to plant manager 7

2.8.1 Key Responsibilities 7

2.8.2 Experience/Education 7

1 Staffing Plan

1.1 Regulatory Requirement

The staffing plan and job descriptions are pursuant to 35 IL Admin Code § 830.206 (a) as part of the Operating Plan for the Organic Waste Facility.

1.2 Org Chart

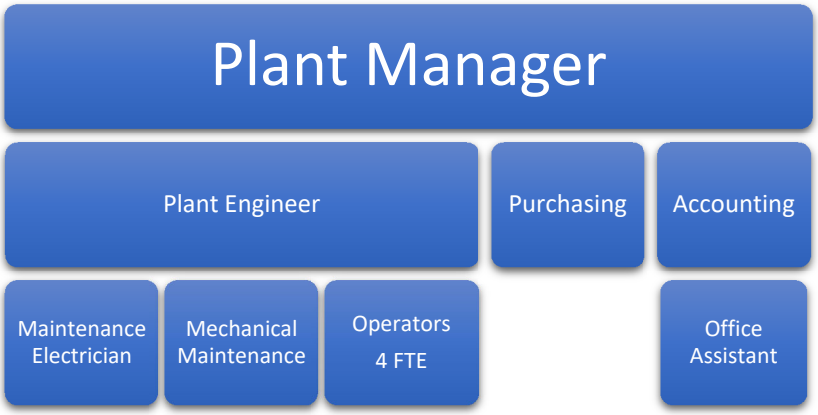

FIGURE 1-1: ORGANIZATIONAL STAFFING CHART

1.3 Estimated Payroll

Position			
Office	**FTE**	**Salary**	**Extended**
Plant Manager - Engineer	1	$ 120,000.00	$ 120,000.00
Plant Engineer / Lab / Permits	1	$ 90,000.00	$ 90,000.00
Purchasing - AR/AP	1	$ 75,000.00	$ 75,000.00
Accounting - Controller	1	$ 75,000.00	$ 75,000.00
Office Assistant	1	$ 55,000.00	$ 55,000.00
Operations			
Technician level operators	4	$ 70,000.00	$ 280,000.00
Skilled Maintenance Operators			
Maintenance Electrician	1	$ 75,000.00	$ 75,000.00
Maintenance Mechanical	1	$ 75,000.00	$ 75,000.00
Subtotal		**base salary**	$ 845,000.00
		benefits (25%)	$ 211,250.00
total payroll	11		$ 1,056,250.00

TABLE 1-1: PAYROLL BUDGET

1.4 Scheduling for Shift Coverage

Initially the facility will operate with three 8-hour shifts from Monday through Friday, with two 12 hour shifts on weekends. The operation staff inclusive of the maintenance personnel will trade weekends. At the recommended staffing level, they would need to work every third weekend. If the Plant Engineer and the Plant Manager would enter the rotation, each person would only need to work every fourth weekend.

The schedule presented in Table 1-2 has two technician level operators on first and second shifts and one operator on third shift and weekends. The Plant Engineer and Plant Manager would perform operator level tasks for coverage of vacation/leave. The Plant Engineer would normally provide four hours of coverage on first shift during busy periods. Maintenance operators will have maintenance specific experience and will train technician level operators. The technician level operators should have the capacity to be trained on the plant specific equipment and attain maintenance level skills with work experience.

	M			T			W			Th			Fr			Sat		Sun			
	1	2	3	1	2	3	1	2	3	1	2	3	1	2	3	1	2	1	2		
Op1																				40	
Op2																				40	
Op3																				48	1 shift planned OT by rotation
Op4																				40	
Op5 MM																				40	
Op6 ME																				40	
PE																				40	
PM																				40	

TABLE 1-2: STAFF SCHEDULING CHART

2 Job Descriptions

2.1 Plant Manager – Reports to Board/Owners

2.1.1 Key Responsibilities

S/he will manage facility operations to continually improve and optimize throughput to meet and exceed production goals; champion best practices to improve process quality, safety, and reliability; operate to maintain compliance will local/state/federal permit requirements, general regulations, and product quality standards.

The plant manager demonstrates superior knowledge and understanding of all aspects of the facility operation and how each function correlates to the other processes and contributes to the overall facility performance. The plant manager should possess excellent analytic skills and disciplined problem solving technique. In this role, s/he must be able to effectively communicate complex and technical material to other managers, staff, regulators, and public interests.

Must understand standard business functions including process costing, purchasing, financial recordkeeping and reporting, human resource management, and marketing.

Identifies feedstock sources and with purchasing manager negotiates or bids on new feedstock contracts. Maintains client relationships through periodic site visits, written communication, and/or phone calls.

Maintains community presence as spokesperson for facility and may include speaking to civic organizations, service clubs, and other community groups to inform about Green Era's organics recycling programs.

Reviews and contributes to standard operating procedures (SOPs) that encompass all facility processes and workflows. Ensures that SOPs are maintained, reviewed, and followed. Manages data and recordkeeping following proper document control procedures and change management.

Supervises 3-5 persons, indirect 7-10.

2.1.2 Experience/Education

The plant manager should have prior supervisory experience in a manufacturing environment or wastewater treatment. Candidate should possess a 4-year degree from an accredited university in a technical field, such as engineering.

Candidate should be equally comfortable on the processing floor as behind a desk. As a key member and leader of the Green Era team, the plant manager will be expected to 'get his/her hands dirty'.

2.2 Plant Engineer – Reports to Plant Manager

2.2.1 Key Responsibilities

S/he will perform cost studies on existing processes and use data to drive continuous improvement; manage capital improvement projects and budgets; develop, budget for, and manage a preventative maintenance program for each asset; prioritize maintenance activities to minimize unplanned downtime. S/he will monitor and analyze process KPIs to optimize facility throughput and ensure stability of biological processes. The plant engineer should lead root cause analysis of problems and coordinate the team effort to determine and implement appropriate corrective actions.

The plant engineer possess knowledge of financial indicators, analysis methods, and capital planning. The plant engineer will prepare an annual report detailing engineering improvements, equipment downtime, maintenance activities and budget. The report should also prioritize goals and activities for the next period with budgetary estimates.

The plant engineer should have a solid technical foundation and understand mechanical, hydraulic, and electrical systems. The plant engineer should be experienced with process and equipment automation, control instrumentation, and basic PLC function and system architecture. S/he should study and demonstrate in-depth knowledge of the chemical and biological wastewater treatment processes in the facility to aid in process troubleshooting and process optimization.

The plant engineer will be responsible for writing and maintaining work instructions and SOPs and training employees. Create training materials for complex processes. Training aids could include written instructions, training videos, or software based guides. Maintain revision history and proper document control. Maintain electronic documentation in an organized and accessible format for the users. Review and update electronic documentation as new information or training aids become available for unit processes or equipment.

Serve as the designated Emergency Coordinator for the facility, maintain associated documentation, and conduct training for emergency procedures.

Supervises 4-6 persons.

2.2.2 Experience/Education

Candidate should have 5 or more years of experience working as an engineer in a professional capacity. Work experience in a manufacturing plant, wastewater treatment facility, or recycling plant is preferred. A 4-year engineering degree from an accredited university is required for this position.

Candidate should be equally comfortable on the processing floor as behind a desk. As a key member of the Green Era team, the plant engineer will be expected to 'get his/her hands dirty'.

2.3 Technician Level Operators

2.3.1 Key Responsibilities

Technician level operators will manage the day-to-day operation of an organics recycling facility. Lead operators will be responsible for monitoring equipment operation and making adjustments and recommendations to improve efficiency. They will be cross-trained in every job at the facility and demonstrate in-depth understanding of all processes.

Operators should be trained in, or have an eagerness to learn, basic wastewater treatment processes. Operators should have general familiarity with mechanical, hydraulic, and electrical devices and the ability to perform basic troubleshooting of process equipment. This facility uses many different material handling devices common to wastewater treatment facilities including pumps, blowers, screw conveyors, and mixers. Lead Operators will need to be comfortable with the safe operation of this stationary equipment and be able to learn and safely operate mobile equipment such as wheel loaders, skid steers, all-terrain fork lifts (telehandlers), tow motors, and man lifts. Operators will need to be aware of their environment as they operate equipment and work throughout the facility, especially on the tipping floor where there will be frequent vehicular traffic.

Operators should be comfortable using Windows based computers and Microsoft Office software. They will be required to use mobile devices and desktop PCs to monitor processes, record and report data, and communicate with coworkers on a daily basis.

Plant operators will be expected to collect product samples, conduct measurements, and record data and observations on a daily basis. Operators will need to be able to perform basic laboratory and field tests reliably, safely, and consistently. Operators will be expected to be able to understand and interpret the test results and use the data to make necessary adjustments to plant operating parameters.

Operators will be responsible for encouraging and enforcing good housekeeping practices and written procedures.

Operators will be trained in the safe operation of biogas compression and combustion equipment, including screw compressors, rotary lobe blowers, boilers, stationary engines, and waste gas flare. They may be trained to perform routine maintenance on this combustion equipment. This could include oil and filter changes on the engine, ignition system adjustments for the boiler or flare, or flame sensor adjustment on the boiler or flare. Operators will be trained in lockout/tagout procedures for safe servicing of equipment with stored potential energy. Operators should have or be able to obtain training for confined space entry. They will be trained to work safely in areas, which in the event of equipment failure, could contain flammable gases and or hydrogen sulfide gas. They will also receive training in the use of personal 4-gas meters and other personal protective equipment (PPE). Operators will also need to safely work with chemicals that have the potential to cause injury or environmental hazards if handled improperly. This may require the proper use of personal protective gear.

Operators must be able to work alternate weekends, about 1 weekend per month.

2.3.2 Experience/Education

A high school diploma is required for this position. Vocational training in mechanics, hydraulics, electrical, welding in combination with relevant job experience is desired.

Plant operators should be creative problem solvers, leaders, and great communicators.

Valid driver's license is required.

Ability to lift 75 pounds on a regular basis is required.

2.4 Maintenance Electrician

2.4.1 Key Responsibilities

The *maintenance electrician* will provide operational support for a new organics recycling facility. S/he will be responsible for troubleshooting and maintaining automated equipment, including control wiring and power wiring.

The maintenance electrician should have a solid technical foundation and understand mechanical, hydraulic, and electrical systems. The candidate should be experienced with process and equipment automation, control instrumentation, and basic PLC function and system architecture.

Candidate should be able to accurately interpret electrical schematics, including panel wiring drawings, field wiring drawings, I/O circuits and device wiring schematics.

The maintenance electrician will be help develop and execute preventative maintenance programs for each asset, prioritize maintenance activities, and minimize unplanned downtime.

The maintenance electrician will be responsible for tracking parts usage, maintaining spares inventory, requisitioning materials, and gathering order information/specifications/quotes to complete jobs. This may involve data entry into a computer database managed maintenance system.

Maintenance technicians should be comfortable using Windows based computers and Microsoft Office software. They will be required to use mobile devices and desktop PCs to monitor processes, record and report data, and communicate with coworkers on a daily basis.

The maintenance electrician should be able to safely work around energized equipment and voltages up to 4160 VAC and adhere to company and industry safety standards and polices.

The facility will have onsite paralleling natural-gas generators and the electrician should understand generator operation, power distribution, protection relay circuits, switch gear, and transformers.

While the focus of the position is an expertise in electrical systems and components, the candidate will be expected to assist daily with general plant operations as part of the operations team.

The Maintenance Electrician must be able to work alternate weekends, about 1 weekend per month.

2.4.2 Experience/Education

Candidate should have 5 or more years of experience working in an industrial environment as a journeyman-level equivalent electrician.

Ability to lift 75 pounds on a regular basis is required. Ability to remain on feet for full 8 hour shift including walking and climbing stairs. Ability to work on ladders and scaffolding. Ability to work from and operate mobile work platforms, including scissor lifts, man lifts, and bucket trucks.

2.5 Maintenance Mechnaic

2.5.1 Key Responsibilities:

The *maintenance mechanic* will provide operational support for a new organics recycling facility. S/he will be responsible for troubleshooting and maintaining automated stationary and mobile equipment to minimize unplanned downtime. Maintenance personnel will be cross-trained in the normal and safe operation of production machinery and plant systems.

The maintenance technician should have a solid technical foundation and understand mechanical, hydraulic, pneumatic and electrical systems. The candidate should be experienced with basic fabrication and welding.

Candidate should be able to accurately interpret equipment manuals and drawings, including assembly drawings, part drawings, exploded views, basic wiring schematics, hydraulic schematics, and piping drawings.

The maintenance technician will be help develop and execute preventative maintenance programs for each asset, prioritize maintenance activities, and minimize unplanned downtime.

The maintenance technician will be responsible for tracking parts usage, maintaining spares inventory, requisitioning materials, and gathering order information/specifications/quotes to complete jobs. This may involve data entry into a computer database managed maintenance system.

Maintenance technicians should be comfortable using Windows based computers and Microsoft Office software. They will be required to use mobile devices and desktop PCs to monitor processes, record and report data, and communicate with coworkers on a daily basis.

The maintenance technician should be able to safely work around energized equipment and adhere to company and industry safety standards and polices.

May be required to work off-shift hours to complete needed repairs/work.

While the focus of the position is an expertise in mechanical systems and components, the candidate will be expected to assist daily with general plant operations as part of the operations team.

The Maintenance Mechanic must be able to work alternate weekends, about 1 weekend per month.

2.5.2 Experience/Education

Candidate should have 5 or more years of experience working in an industrial environment as a maintenance technician.

Ability to lift 75 pounds on a regular basis is required. Ability to remain on feet for full 8 hour shift including walking and climbing stairs. Ability to work on ladders and scaffolding. Ability to work from and operate mobile work platforms, including scissor lifts, man lifts, and bucket trucks.

2.6 Purchasing/Feedstock Procurement – reports to plant manager

2.6.1 Key Responsibilities

The purchasing manager will support operations of an organics recycling facility. S/he will oversee procurement of consumable items to support production, commodity chemicals for wastewater treatment, MRO purchases for normal operations, and equipment spare parts. S/he may also negotiate and maintain purchasing contracts with key suppliers.

The Purchasing Manager will also maintain feedstock contracts and assist the Plant Manager with feedstock procurement and bid responses for feedstock contracts.

The purchasing manager should possess knowledge of financial indicators, analysis methods, capital planning, and standard accounting principles. S/he will analyze cost trends, develop and review cost forecasts.

The purchasing manager should have a basic technical foundation and understand common components of mechanical, hydraulic, and electrical systems.

Issue regular summary reports to management including budgets, commodity use forecasting, cost savings, purchased volumes and other metrics as required.

Develop and maintain supplier relationships, basic information, and pricing histories.

Work closely with accounting and operations team to enter and maintain accurate information into the ERP/MRP system. Develop and enforce standard workflow procedures, record keeping, and approvals.

Regularly reviews open purchase orders and follows-up with suppliers on projected delivery dates and back-orders.

2.6.2 Experience/Education

Candidate should have 5 or more years of purchasing experience in a manufacturing environment. A 4-year technical, finance, supply chain, or business degree from an accredited university is preferred for this position.

2.7 Accounting Manager / Controller – reports to plant manager

2.7.1 Key Responsibilities

The accounting manager will support operations of an organics recycling facility. S/he will analyze financial data and prepare standard reports such as balance sheet, income statements, current assets / liabilities. Reports should summarize the data and provide interpretation and analysis of current and future positions to guide key business decisions by the management team.

S/he will document, implement, and enforce standard accounting systems and control procedures.

Perform month-end and year-end closings. Audit contracts, orders, and vouchers and prepares reports to show individual transactions prior to final settlement.

Manages accruals and supporting records.

Provide direct training and coaching to management team members to develop financial acumen and capability to apply financial principles to daily decisions and long term strategic planning.

Support special projects and ad hoc reporting needs.

Assist in developing and maintaining accurate costing models.

2.7.2 Experience/Education

Candidate should have 5 or more years of general accounting experience in a manufacturing environment. A 4-year technical, finance, supply chain, or business degree from an accredited university is preferred for this position. Candidate should understand and practice GAAP. The Accounting Manager should have advanced proficiency using MS Office software and business accounting database systems.

2.8 Office Assistant – reports to plant manager

2.8.1 Key Responsibilities

The office assistant will support operations of an organics recycling facility. S/he will provide assistance to the plant manager, purchasing, and accounting with data entry functions, reporting, and analysis.

2.8.2 Experience/Education

Candidate should have a 4-year technical, finance, supply chain, or business degree from an accredited university is preferred for this position. Candidate should understand basic business workflow and business functions. The office assistant should have advanced proficiency using MS Office software and business information database systems.

Experience in an office environment in an manufacturing company is preferred, 1..4 years. Recent college graduates will be considered if they have prior internship/co-op experience.

PERSONNEL TRAINING PLAN
Doc. No. MP-04
Green Era
Organics Recycling Facility

650 W. 83rd Street

Cook County, Chicago, Illinois 60620

Prepared By

Green Arrow Engineering

2759 Long Road

Wooster, OH 44691

REVISION LEVEL	DESCRIPTION	ISSUE DATE
R0	INITIAL RELEASE	10/2/21
R1	CHANGED DOC. REFERENCE FROM "CONTINGENCY PLAN" TO "EMERGENCY RESPONSE PLAN" SECTION 1.5	10/25/21

Contents

1 Training Procedures 2

1.1 Employee Training Overview 2

1.2 Operating Procedures 2

1.3 Emergency Training 3

1.4 Odor Control and Surveillance Training 3

1.5 Waste Control Training 3

1.6 Safety Training 4

1.7 Training Implementation 4

1.7.1 Prior to Initial Operation 4

1.7.2 New Employees - ongoing 5

1.8 Annual Training Review 5

2 Recordkeeping Requirements 6

2.1 Job Description 6

2.2 Training Description 6

2.3 Training Documentation 6

2.4 Training Records 6

1 Training Procedures

1.1 Employee Training Overview

Any process that increases the skills and abilities of the employees to do a specific job is referred to as "training." Training is usually distinguished from "education," the process of increasing one's understanding. Obviously, there are overlaps between the two types of learning.

Training of personnel will occur both on-site and off-site. On-site training will be provided on the job and may range from working closely with a person familiar with the Facility operations and safety requirements to formally structured classes with lectures and presentations. Off-site training involves training outside the facility.

Training will be an ongoing process at the Facility. Institution of new techniques or modification of procedures will be accompanied by careful consideration of the training required to perform new tasks and/or procedures in an efficient and safe manner. All personnel will be adequately trained to safely carry out their designated on-site duties.

The Green Era Organics Recycling Facility will be permitted to receive and process Organic Wastes by IEPA under the same rules that apply to Landscape Waste Compost Facilities. This training plan shall be pursuant to 35 IL Admin Code § 830.210: Personnel Training for Permitted Landscape Waste Compost Facilities.

a) *The operator of a permitted landscape waste compost facility shall provide training to all personnel prior to initial operation of a composting facility. In addition, annual personnel training shall be provided, which must include, at a minimum, a thorough explanation of the operating procedures for both normal and emergency situations.*
b) *New employees shall be trained, prior to participating in operations at the facility, in facility operations, maintenance procedures, and safety and emergency procedures relevant to their employment.*
c) *The operator shall have personnel sign an acknowledgement stating that they have received the training required pursuant to this Section.*
d) *The facility operating plan required pursuant to Section 830.206 must be made available and explained to all employees.*

1.1.1 Operating Procedures

All employees assigned to the Facility will be trained its operation by a period of classroom instruction utilizing the Operations Manual. The Operations Manual will be maintained electronically and available for all employees to review at any time pursuant to 35 IL Admin Code § 830.210 (d).

The classroom instruction will be followed by a period of practical training (on the job). This training will cover all of the organic feedstocks that will be received at the Facility for processing, as well as the specific responsibilities associated with the Facility operation.

Operators should have general familiarity with mechanical, hydraulic, and electrical devices and the ability to perform basic troubleshooting of process equipment. The plant will use many different material handling devices common to waste water treatment facilities including pumps, blowers, conveyors, and mixers. Operators will need to be comfortable with the safe operation of this stationary equipment and be able to learn and safely operate mobile equipment such as wheel loaders, skid steers, all-terrain fork lifts (telehandlers), tow motors, material handlers (mobile crane), and man lifts. Operators will need to be aware of their environment as they operate equipment and work throughout the facility, especially on the tipping floor where there will be frequent vehicular traffic.

Operators should have the ability to use Windows-based computers and Microsoft Office software. They will be required to use mobile and desktop PCs to monitor processes, record and report data, and communicate with coworkers on a daily basis. They should be able to follow basic written work instructions as well as verbal directions.

Plant operators will be expected to perform routine laboratory work on a daily basis. They will need to be able to perform these tests reliably, safely, and consistently. Operators will be expected to be able to understand and interpret the test results and use the data to make necessary adjustments to plant process parameters.

Everyone working at the Facility, with the exception of the office staff, is provided with continuous Occupational Safety and Health Administration (OSHA) training and there are monthly safety and retraining meetings.

1.2 Emergency Training

All employees working on the production floor of the Facility will be trained in the operation of emergency equipment (e.g., fire extinguishers, spill response kit, first aid kits) and emergency procedures. Classroom instruction will utilize the *Emergency Response Plan* and the *Waste Control Plan* as guides, as well as standard operating procedures. The emergency coordinators will all be trained in first aid and cardiopulmonary resuscitation (CPR) by classroom instruction given by the American Red Cross. The classroom instruction will be followed by a period of practical training (on the job) in the operation of the fire extinguishers, spill control and cleanup, and notification in case of fire, explosion or injury. On the job training will be continued with annual emergency drills.

1.3 Odor Control and Surveillance Training

All employees will receive training on Green Era's Odor control procedures and management practices. Classroom instruction will review the *Odor Control Plan* and the *Odor Management Plans*, as well as standard operating procedures for odor mitigation, odor control equipment, and surveillance. These management plans are part of the *Operations Manual*.

Plant Operators who are directly responsible for odor surveillance will be trained in the use of the odor monitoring equipment and odor descriptors per the Odor Observation form.

1.4 Waste Control Training

Facility operators will be trained in the recognition and the handling procedures for unauthorized and/or hazardous waste by a period of classroom instruction utilizing the *Waste Control Plan*, which is part of the *Operations Manual*. This training will be followed by a period of practical training where simulated unauthorized and/or hazardous waste will be placed into an incoming feedstock truckload at the Wallace Street gate so that the employees can practice the procedures contained in the *Waste Control Plan* for the removal of unauthorized and/or hazardous waste from the waste stream.

All personnel involved in waste handling will also be trained in identifying unacceptable waste and Special Wastes in accordance with 35 IL Admin Code § 808.110. This Part includes the definitions of what constitutes Special Waste and the criteria for identifying the characteristics of Special Waste and classification. "Special Waste", as defined in 35 IL Admin Code § 830.102, *means any industrial process waste, pollution control waste or hazardous waste, except as determined pursuant to Section 22.9 of the Act and 35 Ill. Adm. Code 808. (Section 3.45 of the Act.)*

In addition, all management personnel who will be assigned to the unloading area within the Facility and Facility Operations Manager/Emergency Coordinators will attend an OSHA 24-hour Hazardous Waste Operations And Emergency Response (Hazwoper) Training Program in accordance with 29 CFR 1910.120, and any refresher courses, as required.

1.5 Safety Training

Safety training will consist of a period of classroom instruction to all employees, which covers and instructs them in the following areas:

1. The facility layout; specifically the location of first aid and safety equipment and emergency stop buttons.
2. The correct use of safety equipment, including, but not limited to, gloves, masks, eye protection, and safety boots.
3. The Facility *Emergency Response Plan (MP-06)*, which is part of the *Operations Manual*.
4. Specific workplace practices, specifically:
    a. hand washing.

b. handling of sharp objects.

c. routine examinations of equipment.

d. disposal of contaminated materials.

e. correct and safe operation of all on-site firefighting equipment

f. procedure for reporting safety violations.

g. protocols for reducing transmission of airborne pathogens (COVID)

In addition, operators will be trained in the safe operation of biogas compression and combustion equipment, including screw compressors, rotary lobe blowers, boilers, and waste gas flares. They may be trained to perform routine maintenance on this combustion equipment. For example, this could include oil and filter changes on gas compressors, ignition system adjustments for the boiler or flare, or flame sensor adjustment on the boiler or flare. They should be trained and familiar with lockout/tagout procedures for safe servicing of equipment with stored potential energy. Operators should have or be able to obtain training for confined space entry. They will be trained to work safely in areas, which in the event of equipment failure, could contain flammable gases and or hydrogen sulfide gas. They will also receive training in the use of personal 4-gas meters and other personal protective equipment (PPE). Operators will also need to safely work with chemicals that have the potential to cause injury or environmental hazards if handled improperly. This may require the proper use of personal protective gear both for lab work and bulk chemical usage, if required.

All precautions taken to safeguard the employee's health and welfare shall be, at a minimum in accordance with 29 CFR 1910, inclusive, and any applicable local rules and regulations. Copies of such regulations will be maintained at the site and made available for employee review. Copies of 29 CFR 1910 (Occupational Safety and Health Standards) may be obtained through the United States Government Printing Office, Phone: 202-783-3238.

1.6 Training Implementation

1.6.1 Prior to Initial Operation

All employees will complete the required training items delineated in Sections 1.1 through 1.6 of this plan subsequent to the receipt of the Facility's Permit to Operate and prior to initial operation of the Facility.

1.6.2 New Employees - ongoing

All new employees hired for the Facility operations will complete the required training items delineated in Sections 1.1 through 1.6 of this plan within six months of the start of their employment. No new employee will work unsupervised until all required training has been completed.

1.7 Annual Training Review

Refresher training covering all the training required under this plan will be given to all employees of the Facility in the anniversary month of the operating (or modified operating) permit. All employees are required to participate in this refresher training.

2 Recordkeeping Requirements

2.1 Job Description

The Facility will maintain written job description for all positions within the solid waste management operations. These records will consist at a minimum:

a. Job Title.

b. Written Description containing the skills, education, qualifications, and duties required for the position.

c. Name of the Employee filling the position.

2.2 Training Description

The Facility will maintain a written description of the training, both introductory and continuing, provided to each person employed at the Facility. This description will contain the type and amount of training received by each employee.

2.3 Training Documentation

All employee training classes given by the Facility will be documented by attendance sheets and course completion certificates. All practical training activities will be documented by a course completion certificate. Copies of all course attendance sheets and completion certificates will be place in a training records file maintained for each employee.

2.4 Training Records

The Facility will maintain a training records file on each past and present employee (35 IL Admin Code § 830.211 (a)(11)). These records will contain copies of course certificates and attendance sheets for each training course completed by the employee. The Facility will maintain the records until either the facility closure or three years from the date of last employment. These records will be made available for inspection upon request (35 IL Admin Code § 830.211 (d)).

ENVIRONMENTAL

Environmental Engineers, Geologists and Scientists

Tel 847.573.8900
Fax 847.573.8953

Polo Park Business Center
27834 N. Irma Lee Circle
Lake Forest, Illinois 60045-5130

CLOSURE PLAN
GREEN ERA RENEWABLE ENERGY & URBAN FARMING CAMPUS
650 WEST 83RD STREET
CHICAGO, ILLINOIS 60620-1937

DOC. NO. MP-05

March 31, 2021

Revision: December 13, 2021

Prepared For:
Green Era 83rd Street, LLC
218 North Jefferson Street, Suite 300
Chicago, Illinois 60661-1307

Prepared By:
DAI Environmental, Inc.
27834 North Irma Lee Circle
Lake Forest, Illinois 60045

TABLE OF CONTENTS

ILLINOIS EPA LPC PA11 ii

1.0 INTRODUCTION 1

2.0 CLOSURE PLAN 1
2.1 ROUTINE CLOSURE 1
2.2 PREMATURE CLOSURE OR TEMPORARY SHUTDOWN 3

3.0 CLOSURE COSTS 7
3.1 ROUTINE CLOSURE COSTS 7
3.1.1 Removal and Treatment/Disposal Costs (Routine Closure) 7
3.1.2 Decontamination Costs (Routine Closure) 8
3.1.3 Closure Certification Costs (Routine Closure) 9
3.1.4 Total Closure Costs (Routine Closure) 9
3.2 PREMATURE CLOSURE/TEMPORARY SHUTDOWN COSTS 10
3.2.1 Removal and Treatment/Disposal Costs (Premature Closure) 10
3.2.2 Decontamination Costs (Premature Closure) 12
3.2.3 Closure Certification Costs (Premature Closure) 12
3.2.4 Total Closure Costs (Premature Closure) 13

LIST OF APPENDICES

CLOSURE SCHEDULE ..... APPENDIX A
COST ESTIMATION CALCULATIONS ..... APPENDIX B

©2021, DAI Environmental, Inc.

1.0 INTRODUCTION

Green Era 83rd Street, LLC will operate a food waste (solid and liquid) recycling facility addressed as 650 West 83rd Street in Chicago, Illinois. The facility will receive food waste into a Processing Building with concrete floor and will additionally process the food waste in two (2) exterior aboveground storage tanks (ASTs): a biomass equalization tank and an anaerobic digester AST. The Illinois Environmental Protection Agency (Illinois EPA) views the anaerobic digestion of food waste process as "in-vessel composting," and defines "composting" as "the biological treatment process by which microorganisms decompose the organic fraction of waste, producing compost." The Illinois EPA further defines "compost" as the humus-like product (solid) of the process of composting waste, which may be used as a soil conditioner." Finished product compost may be temporarily stockpiled inside the Compost Loading and Handling Building (Pole Barn) building with concrete pad floor when not shipped off-site immediately (typical operations). No outdoor storage or transfer operations will be conducted at the facility. The below information provides a *Closure Plan* written consistent with the applicable requirements of 35 IAC 807.503 and requested in Sections 5 and 15 of Illinois EPA LPC-PA11 form.

2.0 CLOSURE PLAN

2.1 ROUTINE CLOSURE

Under the routine (planned) Closure scenario, the facility would cease accepting wastes, and would process through the already-received wastes, such that very little material would be left on-site to manage. No "raw" food waste (i.e., untreated and unprocessed organic materials) should remain if the facility were pursuing a planned closure, because all waste import would be terminated in advance. The digestate would be dewatered and the filtrate discharged to the Metropolitan Water Reclamation District (MWRD) under an existing Discharge Authorization. The dewatered digestate cake (i.e., the finished product created by the 2-stage belt press dewatering process) that might be stored in the Compost Loading and Handling Building (Pole Barn) isn't a "waste," and it is assumed the material would be suitable for agronomic benefit as a soil amendment (if not for sale) as it would be during normal operations. However, in the Closure Costs section, the costs to

©2021, DAI Environmental, Inc.

transport the material off-site are included. Also, the polymer used to aid in the dewatering of the digestate would all be used by dewatering of the remaining digestate. Therefore, the only materials remaining to be disposed would be some glycol, and some virgin and used gear oil and hydraulic oil.

5.A) The maximum amount of waste that could be at the facility at the time of closure.
5.B) The plan for removal of the waste.

The following table summarizes the materials to be managed at routine closure and the plan for removal.

Waste Type	Storage Location	Waste Amount/Volume	Plan for Removal
"Raw" waste - solid	Processing Building floor, concrete	None	Not Applicable
"Raw" food waste - solid	Live-bottom Receiving Bunker	None	Not Applicable
"Raw" pumpable food waste & wash down water - liquid	Concrete ST (2)	None	Not Applicable
Mixed waste - Homogenized liquid slurry	Grit hopper	None	Not Applicable
Partially "treated" waste (Feedstock) - liquid	Biomass Equalization AST	None	Not Applicable
Partially "treated" waste (Conditioned Feedstock) – liquid	Digester AST	None	Not Applicable
Wastewater (Digestate)	Concrete ST	None	Not Applicable
Wastewater (Filtrate)	Concrete ST (2)	None	Not Applicable
Unused polymer	AST (1)	None	Not Applicable
Finished product (compost "cakes") and wood chips/coir	Pole Barn floor, concrete	None	Not Applicable
Non-Food Solid Wastes (activated carbon, PSA media)	Within the operating equipment	32-yd^3 (carbon) 4-yd^3 (PSA media)	Disposal at a licensed special or non-special waste landfill
Glycol (virgin + diluted)	Processing Building (main floor, southern portion); Heat exchanger tanks (2)	600-gallons	Disposed at a licensed liquid waste disposal facility
Virgin Gear and Hydraulic Oil	Processing Building (main floor, southern portion)	600-gallons	Transport to oil recycler
Used Gear and Hydraulic Oil	Processing Building (main floor, southern portion)	300-gallons	Transport to oil recycler

AST – aboveground storage tank
ST – sub-grade storage tank

©2021, DAI Environmental, Inc.

5.C) The methods to decontaminate any remaining facilities or equipment.

All of the wastes brought to the facility will be non-hazardous liquids and solids that were diverted from a municipal landfill or wastewater treatment facility. Therefore, decontamination of the facility and equipment under this Routine Closure Scenario should not require more than a simple pressure wash-down with water and then discharge of the wash-down water to the Metropolitan Water Reclamation District of Greater Chicago (MWRD) under the existing Discharge Authorization (as the wash down water would be suitable for discharge to the MWRD under the existing Discharge Authorization). It is assumed that a third-party emergency response contractor would be engaged to perform the decontamination. A more detailed listing of the steps and schedule for decontamination, decommissioning, and closure, is provided in Appendix A. The associated costs as discussed in Section 3.1.

5.D) A schedule and recordkeeping procedures to be followed.

As detailed in a Gantt Chart provided in Appendix A, it is presumed that closure and decontamination can be completed in approximately 10-weeks (including the time to dewater the contents of the digester). Recordkeeping will be limited to simple waste tracking (e.g., bill of lading) and any recordkeeping/reporting requirements associated with the discharge authorization with the sanitary district. Additional recordkeeping may include any requirements specified in permits obtained from the Illinois EPA and/or City of Chicago. The Closure Activities will be documented in a Closure Report prepared and Certified by a Professional Engineer.

2.2 PREMATURE CLOSURE OR TEMPORARY SHUTDOWN

5.E) A plan to be followed in case of premature final closure and temporary shutdown of the unit(s). The plan should identify the specific differences between routine and premature closure.
5.A) The maximum amount of waste that could be at the facility at the time of closure.
5.B) The plan for removal of the waste

Routine Closure was discussed in Section 2.1. Under the Premature Closure scenario, it is assumed that the facility for some reason must suddenly cease operating, and as a result, the maximum quantities of waste and product are present at the facility and some of which cannot be processed,

©2021, DAI Environmental, Inc.

but rather, must be removed from the facility for off-site management or disposal in accordance with all regulations.

With respect to "temporary shutdown" Closure, the amounts of wastes stored and requiring management would depend on the nature and causes of the "temporary shutdown," and the duration of the shutdown. For example, it can be assumed that under a temporary closure, receiving of wastes would immediately cease. But the plan to deal with and manage the "raw wastes" present within the building, and the liquids in the equalization tank and the digester tank, would depend on the duration of the "temporary closure." If "temporary" meant a few days, and during that time, the flare could be operated to manage the generated biogas, then practically no actions would have to be taken, as the solid and liquid wastes in the building, and the materials in the large ASTs outside the building, could basically continue to be stored within the building/tanks. But on the other end of the spectrum (i.e., a "worst-case" temporary closure), it might be necessary to cease operating the digester, and remove and/or process all of the liquids in the tanks and all of the raw and partially processed wastes within the building, which would then mirror the steps/costs for Premature Closure. As such, the Premature Closure and Temporary Closure scenario will henceforth in this Plan be viewed as the same. The following is assumed with respect to the ultimate disposition and handling of wastes and materials under Premature Closure:

- With the exception of the Digestate, Polymer, and the Finished Product Cake, all remaining materials present at the moment of "premature closure" will be transported off site and disposed at an appropriate and permitted off-site facility. This includes all unprocessed solid food waste, and the contents of the feedstock equalization tank (320,000-gallons). Such locations could include other permitted food waste composting facilities (examples include Christiansen Farms in Peotone, or Midwest Organics Recycling in McHenry) or (for the liquids) publicly owned treatment works with operating digesters that are willing for a fee to accept high strength liquid food wastes that are delivered to them. Further details regarding the assumed destinations for these materials are listed in the table below.
- Digestate will be managed by engaging a third-party contractor to dewater the digestate (using rented dewatering equipment), and directing the filtrate to the facility's wastewater outfall for discharge to the MWRD under the Discharge Authorization for the Facility. The dewatered digestate cake (estimated in Appendix B at 1,426-tons) will be transported off-site to permitted compost facilities for subsequent use as compost, or otherwise disposed at a permitted facility licensed to accept such material.

©2021, DAI Environmental, Inc.

The table below lists the types and quantities of materials to be addressed under the Premature Closure and/or Temporary Closure, scenarios.

Waste Type	Storage Location	Waste Amount/Volume	Plan for Removal
"Raw" waste - solid	Processing Building floor, concrete	12 loads, 480-yd^3	Disposed at another compost facility
"Raw" food waste - solid	Live-bottom Receiving Bunker	90-yd^3	Disposed at another compost facility
"Raw" pumpable food waste & wash down water - liquid	Concrete ST (2)	60,000-gallons (total)	Delivered to a POTW
Mixed waste - Homogenized liquid slurry	Grit hopper	5,500-gallons	Delivered to a POTW
Partially "treated" waste (Feedstock) - liquid	Biomass Equalization AST	320,000-gallons	Delivered to a POTW
Partially "treated" waste (Conditioned Feedstock) - liquid	Digester AST	1,680,000-gallons	Dewatered on-site by 3rd party contractor, filtrate discharged to MWRD, dewatered digestate donated/used as compost.
Wastewater (Digestate)	Concrete ST	30,000-gallons	Same as above
Wastewater (Filtrate)	Concrete ST (2)	30,000-gallons (each)	Discharged to MWRD under existing authorization
Unused Polymer	AST (1)	None (will be used to assist dewatering of digestate)	Will be used, no need for disposal
Finished product (compost "cakes") and wood chips/coconut husks	Pole Barn floor, concrete	1,426-tons (not all generated and stored at once, but over the closure)	Transported to off-site facilities permitted to accept compost or disposed
Non-Food Solid Wastes (activated carbon, PSA media)	Within the operating equipment	32-yd^3 (carbon) 4-yd^3 (PSA media)	Disposal at a licensed special or non-special waste landfill
Glycol	Processing Building (main floor, southern portion); Heat exchanger tanks (2)	600-gallons	Disposed at a licensed liquid waste disposal facility
Virgin Gear Oil and Hydraulic Oil	Processing Building (main floor, southern portion)	600-gallons	Transport to oil recycler
Used Gear Oil and Hydraulic Oil	Processing Building (main floor, southern portion)	300-gallons	Transport to oil recycler

AST – aboveground storage tank
ST – sub-grade storage tank

©2021, DAI Environmental, Inc.

5.C) The methods to decontaminate any remaining facilities or equipment.

Under the Non-Routine/Temporary Closure Scenario, the following is anticipated regarding decontamination of any remaining facilities or equipment. Because all of the wastes brought to the facility will be non-hazardous liquids and solids, most of the decontamination of the facility and equipment could be accomplished through a simple wash down with water. The wash down water would be suitable for discharge to the MWRD under the existing discharge authorization. It is assumed that a third-party emergency response contractor would be engaged to perform the decontamination and decommissioning. Additional steps and schedule regarding decontamination and decommissioning are provided in Appendix A. The assumptions include:

- It is estimated that a 6-person decommissioning crew will require 10-weeks (40-hrs/week) to complete the tank cleaning and facility decommissioning. The costs (presented later in Section 3.2) are estimated using a labor rate of $125/hr and a bulk averaged equipment rental rate of $250/hr.
- The work will be overseen by a Professional Engineer familiar with the Closure Plan.

5.D) A schedule and recordkeeping procedures to be followed.

As detailed in a Gantt Chart provided in Appendix A, it is presumed that closure and decontamination can be completed in 10-weeks or less. The schedule in Appendix A actually includes 2-weeks of time to process the liquid in the feedstock equalization tank, which, under the Non-Routine Closure Scenario, would simply be disposed off-site, thereby shortening the Closure time frame a bit. Recordkeeping will be limited to simple waste tracking (e.g., bill of lading) and any recordkeeping/reporting requirements associated with the discharge authorization with the sanitary district. Additional recordkeeping may include any requirements specified in permits obtained from the Illinois EPA and/or City of Chicago. The Closure Activities will be documented in a Closure Report prepared and Certified by a Professional Engineer.

5.E) A plan to be followed in case of premature final closure and temporary shutdown of the unit(s). The plan should identify the specific differences between routine and premature closure.

The steps and assumptions outlined above provide the plan to follow under premature final closure and temporary shutdown. Routine Closure was discussed in Section 2.1.

©2021, DAI Environmental, Inc.

3.0 CLOSURE COSTS

Per the instructions listed in form LPC-PA11, "*Pursuant to 35 IAC 807.621(d), the closure cost must be based on the assumption that the Agency will contract with a third party for implementation of the closure plan and post-closure plan,*" the costs have been estimated based upon an assumption that the Illinois EPA will contract with a third party to implement the closure plan.

15.A) The cost to remove all waste and decontaminate the facility.
15.B) The cost to treat, or dispose of, or complete composting of the waste, at an offsite facility.
15.C) The cost to certify completion of closure activities utilizing Agency closure certification forms.
15.D) Total cost of the above.

3.1 ROUTINE CLOSURE COSTS

The plan and steps under this scenario were discussed in Section 2.1. The costs to implement the plan are summarized below.

3.1.1 Removal and Treatment/Disposal Costs (Routine Closure)

The removal costs are summarized below, and are based on the following unit costs:

- Non-Food Solid Waste (activated carbon and PSA system media) Removal Costs = \$42/yd^3 (\$30/ton)
- Non-Food Solid Waste Transportation Costs = \$600/load, 20-tons/load, 1.4-tons/yd^3 (\$42/yd^3)
- Non-Food Solid Waste Disposal Costs = \$40/ton (\$56/yd^3)
- Combined Non-Food Solid Waste Removal/Transportation /Disposal = \$140/yd^3
- Costs to remove and dispose or recycle the glycol or petroleum oils are based on vendor quotes.
- Other assumptions are listed in the summary spreadsheets provided in Attachment B.

©2021, DAI Environmental, Inc.

The table below summarizes the estimated removal/transportation/disposal costs under the Routine Closure Scenario.

Routine Closure Scenario Removal/Transportation Disposal Cost Summary

Waste Type	Waste Amount/Volume	Plan for Removal	Cost
"Raw" food waste - solid	None	Not Applicable	$0.00
"Raw" food waste - solid	None	Not Applicable	$0.00
"Raw" pumpable food waste & wash down water - liquid	None	Not Applicable	$0.00
Mixed waste - Homogenized liquid slurry	None	Not Applicable	$0.00
Partially "treated" waste (Feedstock) - liquid	None	Not Applicable	$0.00
Partially "treated" waste (Conditioned Feedstock) - liquid	None	Not Applicable	$0.00
Wastewater (Digestate)	None	Not Applicable	$0.00
Wastewater (Filtrate)	None	Not Applicable	$0.00
Unused polymer	None	Will be used to assist in digestate dewatering	$0.00
Finished product (compost "cakes") and wood chips/coconut husks	None	Not Applicable	$0.00
Non-Food Solid Wastes (activated carbon, PSA media)	36-yd^3 (carbon + media)	Disposed at a licensed non-special waste landfill	$3,528 (pending)
Glycol	600-gallons	Disposed at a licensed liquid waste disposal facility	$1,500 (Hazchem Quote)
Virgin/Used Gear Oil Virgin/Used Hydraulic Oil	900-gallons	Transport to oil recycler	$1,000 (Hazchem Quote)
Total Estimated Removal/Transportation/Disposal Costs (Routine Closure)			**$6,028**

3.1.2 Decontamination Costs (Routine Closure)

The decontamination approach under Routine Closure was presented in Section 2.1. The associated costs are estimated below.

- It is estimated that a 6-person decommissioning crew will require 10-weeks (40-hrs/week) to complete the tank cleaning and facility decommissioning, working at a labor rate of $125/hr.
- Equipment rental is estimated at $250/hour for the 400-hrs ($100,000)
- Utility costs are estimated at $30,000 for the 10-weeks of decommissioning.

©2021, DAI Environmental, Inc.

- The MWRD Surcharges for discharge of wash water ($16,000) were calculated based on the following:
    - 60,000-gallons of digester wash at 20,000-mg/L BOD and 20,000-mg/L TSS
    - 30,000-gallons of equalization tank wash at 30,000-mg/L BOD and 30,000-mg/L TSS
    - 50,000-gallons of processing building wash at 15,000-mg/L BOD and 15,000-mg/L TSS
- Engineering oversight is estimated at $90,000 (bulk average of $175/hr for 400-hrs in the field, plus another $20,000 in senior Project Manager Oversight).

The table below summarizes the estimated decontamination costs under the Premature Closure Scenario.

Routine Closure Scenario Decontamination Cost Summary

Task/Item	Units	Unit Rate	Estimated Cost
Decontamination Labor	6-person crew, 40-hrs/week, 10-weeks	$125/hr	$300,000
Decontamination Equipment Rental	400-hrs	$250/hr	$100,000
Utility Costs	Various	Various	$30,000
MWRD Surcharges	140,000-gallons	Various (see Appendix B)	$16,000
Engineering Oversight	Various	Various	$90,000
Total Estimated Decontamination Costs (Routine Closure			**$536,000**

3.1.3 Closure Certification Costs (Routine Closure)

Closure Certification and documentation costs (Closure Reporting) are estimated at $10,000.

3.1.4 Total Closure Cost (Routine Closure)

The total estimated Closure Costs under the Routine Closure Scenario are summarized in the table below:

Total Estimated Closure Costs for Routine Closure

Item	Estimated Cost
Removal/Transportation/Disposal Costs	$6,028
Decontamination Costs	$536,000
P.E. Certification and Reporting	$10,000
Total Estimated Closure Costs (Premature Closure)	**$552,028**

©2021, DAI Environmental, Inc.

3.2 PREMATURE CLOSURE/TEMPORARY SHUTDOWN COSTS

3.2.1 Removal and Treatment/Disposal Costs (Premature Closure)

The costs to remove all wastes and properly dispose off-site under the Premature Closure/Temporary Shutdown scenario are summarized below. The assumed unit costs and other assumptions are as follows:

- All Solid Waste assumed to have density of 1.4-tons/yd^3
- Non-Food Solid Waste (activated carbon and PSA system media) Removal Costs = \$42/yd^3 (\$30/ton)
- Non-Food Solid Waste Transportation Costs = \$600/load, 20-tons/load, 1.4-tons/yd^3 (\$42/yd^3)
- Non-Food Solid Waste Disposal Costs = \$40/ton (= \$56/yd^3)
- Combined Non-Food Solid Waste Removal/Transportation /Disposal = \$140/yd^3
- Solid Food Waste Removal/Transportation Costs = \$20/ton (\$28/yd^3)
- Solid Food Waste Disposal Cost = \$40/ton (\$56/yd^3)
- Combined Solid Food Waste Removal/Transportation/Disposal Costs = \$60/ton (\$84/yd^3)
- Finished Product (compost) removal/transportation costs = \$60/ton (\$84/yd^3)
- Liquid Food Waste Removal/Transportation = \$400/load, 5,000-gallons/load (\$0.08/gallon)
- Liquid Food Waste Disposal Costs (as high strength wastewater at MWRD or other POTW facility) = \$0.05/gallon
- Combined Liquid Food Waste Removal/Transportation/Disposal = \$0.13/gallon
- Third-party digestate dewatering costs based on an assumed 42-days to complete, with 2-man crew working 10-hrs/day, @\$90/hr, plus \$18,000 in equipment rental and \$26,688 in polymer costs for dewatering
- Discharge Surcharges to MWRD are based on standard user charge rates (2021), of \$273.81/million gallons, \$202.93/thousand pounds of BOD, and \$117.81/thousand pounds of Total Suspended Solids, an assumed volume of Filtrate volume of 1,680,000-gallons, an assumed BOD concentration of 3,750-mg/L, and an assumed TSS concentration of 2,000-mg/L
- Costs to remove and dispose or recycle the glycol or petroleum oils are based on vendor quotes
- Other assumptions are listed in the summary spreadsheets provided in Appendix B.

©2021, DAI Environmental, Inc.

The table below summarizes the estimated removal/transportation/disposal costs under the Premature Closure Scenario.

Premature Closure Scenario Removal/Transportation Disposal Cost Summary

Waste Type	Waste Amount/Volume	Plan for Removal	Estimated Cost
"Raw" food waste – (solid)	570-yd^3	Disposed at another compost facility ($84/yd3)	$47,880
"Raw" pumpable food waste & wash down water – liquid	60,000-gallons (total)	Delivered to a POTW ($0.13/gallon)	$7,800
Mixed waste - Homogenized liquid slurry	5,500-gallons	Delivered to a POTW ($0.13/gallon)	$715
Partially "treated" waste (Feedstock) – liquid	320,000-gallons (feedstock EQ tanks)	Delivered to a POTW ($0.13/gallon)	$41,600
Partially "treated" waste (Conditioned Feedstock) – liquid	1,680,000-gallons (digester)	Dewatered on-site by 3rd party contractor, filtrate discharged to MWRD, dewatered digestate donated/used as compost.	$115,467 (see calculations in Appendix B)
Wastewater (Digestate)	30,000-gallons (concrete storage tank)	Same as above	$2,062
Wastewater (Filtrate) in-building ASTs	60,000-gallons	Discharged to MWRD under existing authorization	$350 at expected BOD/TSS
Unused Polymer	None (will be used to assist dewatering of digestate)	Will be used, no need for disposal	$0.00
Finished product (compost "cakes") and wood chips/coir	1,426-tons (see Appendix B)	Transported to off-site facility for use as compost ($60/ton incl. transportation and tip)	$85,560
Non-Food Solid Wastes (activated carbon, PSA media)	36-yd^3 (carbon + media)	Disposed at a licensed non-special waste landfill	$3,528
Glycol	600-gallons	Disposed at a licensed liquid waste disposal facility	$1,500 (Hazchem Quote)
Virgin/Used Gear Oil and Virgin/Used Hydraulic Oil	900-gallons (total)	Transport to oil recycler	$1,000 (Hazchem Quote)
Total Estimated Removal/Transportation/Disposal Costs (Premature Closure)			**$307,462**

©2021, DAI Environmental, Inc.

3.2.2 Decontamination Costs (Premature Closure)

The decontamination approach under Premature Closure Scenario was presented in Section 2.2. The decontamination costs were estimated as follows:

- It is estimated that a 6-person decommissioning crew will require 10-weeks (40-hrs/week) to complete the tank cleaning and facility decommissioning, working at a labor rate of $125/hr.
- Equipment rental is estimated at $250/hour for the 400-hrs ($100,000)
- Utility costs are estimated at $30,000 for the 10-weeks of decommissioning.
- Engineering oversight is estimated at $70,000 (bulk average of $175/hr for 400-hrs in the field, plus another $30,000 in senior Project Manager Oversight).
- The MWRD Surcharges for discharge of wash water ($16,000) were calculated based on the following:
    - 60,000-gallons of digester wash at 20,000-mg/L BOD and 20,000-mg/L TSS
    - 30,000-gallons of equalization tank wash at 30,000-mg/L BOD and 30,000-mg/L TSS
    - 50,000-gallons of processing building wash at 15,000-mg/L BOD and 15,000-mg/L TSS
- Engineering oversight is estimated at $70,000 (bulk average of $175/hr for 400-hrs in the field, plus another $20,000 in senior Project Manager Oversight).

The table below summarizes the estimated decontamination costs under the Premature Closure Scenario.

Premature Closure Scenario Decontamination Cost Summary

Task/Item	Units	Unit Rate	Estimated Cost
Decontamination Labor	6-person crew, 40-hrs/week, 10-weeks	$125/hr	$300,000
Decontamination Equipment Rental	400-hrs	$250/hr	$100,000
Utility Costs	Various	Various	$30,000
MWRD Surcharges	140,000-gallons	Various (see Appendix B)	$16,000
Engineering Oversight	Various	Various	$90,000
Total Estimated Decontamination Costs (Premature Closure)			**$536,000**

3.2.3 Closure Certification Costs (Premature Closure)

The costs to provide final closure certification in the form of a P.E. Certified Closure Report, is estimated at $25,000.

©2021, DAI Environmental, Inc.

3.2.4 Total Closure Costs (Premature Closure)

The total estimated Closure Costs for the Premature Closure Scenario are summarized in the Table below.

Total Estimated Closure Costs for Premature Closure

Item	Estimated Cost
Removal/Transportation/Disposal Costs	$307,462
Decontamination Costs	$536,000
P.E. Certification and Reporting	$25,000
Total Estimated Closure Costs (Premature Closure)	**$868,462**

©2021, DAI Environmental, Inc.

APPENDIX A
CLOSURE SCHEDULE

©2021, DAI Environmental, Inc.

Decommissioning Gantt Chart for Green Era Digester Facility; 650 W. 83rd Street, Chicago, IL

Green Era
Lead: Plant Engineer

Project Start: Sat, 1/1/2022
Display Week: 1

TASK	Description	START	END	DURATION	
1 - Finish Processing Organics into Stable Digestate	Green Era Operations Staff			Days	Weeks
Remove any packaged feedstock that wasn't processed	Send material to other digester with depackaging, 20 tons/truck	1/1/22	1/6/22	5.00	0.71
Dose remaining feedstock to digester	325,000 GAL @ 25,000 GPD	1/1/22	1/15/22	14.00	2.00
Dewater Digestate	2 MGAL @ 50,000 GPD (avg 4% TS) includes full digester vol. plus volume fed	1/1/22	2/12/22	42.00	6.00
Haul press cake to composter	40 TPD (avg 20% TS)	1/1/22	2/12/22	42.00	6.00
2 - Tank Cleaning	Outside Contractor				
Clean-out lower level liquid receiving tanks. T-050A/B	Pressure wash and remove any settled solids with a vac truck.	1/6/22	1/12/22	6.00	0.86
Open feedstock tank and clean out any remaining organics. T-100	Remove two tank panels for skid steer access. Remove solids to dump truck. Presssure wash walls and vac truck any liquids.	1/15/22	1/29/22	14.00	2.00
Open digester tank and clean out any remaining organics. T-105	Remove two tank panels for skid steer access. Remove solids to dump truck. Presssure wash	2/12/22	2/26/22	14.00	2.00
Clean-out overflow tank, T-120	Vac. Truck out any solids and pressure wash interior walls.	2/12/22	2/16/22	4.00	0.57
Condensate trap, T-300	Vac. Truck any remaining condensate and pressure wash walls	2/26/22	3/1/22	3.00	0.43
Screened digestate tank, T-205	Vac. Truck any remaining liquids and pressure wash walls	2/26/22	3/2/22	4.00	0.57
Filtrate Tanks, T-250A/B	Vac. Truck any remaining filtrate and pressure wash walls	3/2/22	3/7/22	5.00	0.71
3 - Gas Handling Equipment					
De-energize system	lock-out MCC by opening supply breaker. Remove compressed air supply	2/12/22	2/13/22	1.00	0.14
Purge all process lines	Open vents and valves to flush out pipes.	2/13/22	2/17/22	4.00	0.57
Drain hydraulic oil from compressors	Pump to approved drums or totes and have a recycler pick-up.	2/17/22	2/18/22	1.00	0.14
Remove PSA media	Vacuum from vessels and send to landfill	2/18/22	2/21/22	3.00	0.43
Purge all process lines	Open vents and valves to flush out pipes. Use N2 as purge gas until below LEL.	2/13/22	2/17/22	4.00	0.57
4 - Feedstock Processing					
Flush pipes with fresh water	pump filtrate water through pipes and then drain. Pump to digester.	1/15/22	1/16/22	1.00	0.14
De-energize system	Lock-out MCCs	2/12/22	2/13/22	1.00	0.14
Feedstock hopper and grit tank	pressure wash bins	2/14/22	2/19/22	5.00	0.71
5 - Process Heating					
Flush sludge pipes with fresh water	pump filtrate water through sludge pipes and then drain to screened digestate tank.	2/1/22	2/2/22	1.00	0.14
Drain ethylene glycol	pump to totes and dispose at licensed facility	2/16/22	2/17/22	1.00	0.14
De-energize system	Lock-out MCCs. Shut and lock natural gas supply valves to boilers.	3/1/22	3/2/22	1.00	0.14
6 - Dewatering Equipment					
Flush pipes with fresh water	Feed pipe and tanks diluted with filtrate and then processed through dewatering.	2/20/22	2/22/22	2.00	0.29
Use remaining made-down polymer	cosume remaining made-down polymer	2/22/22	2/22/22	0.00	0.00
Pressure wash all equipment	Clean dewatering equipment and wash down to filtrate tanks for MWRD.	2/23/22	2/24/22	1.00	0.14

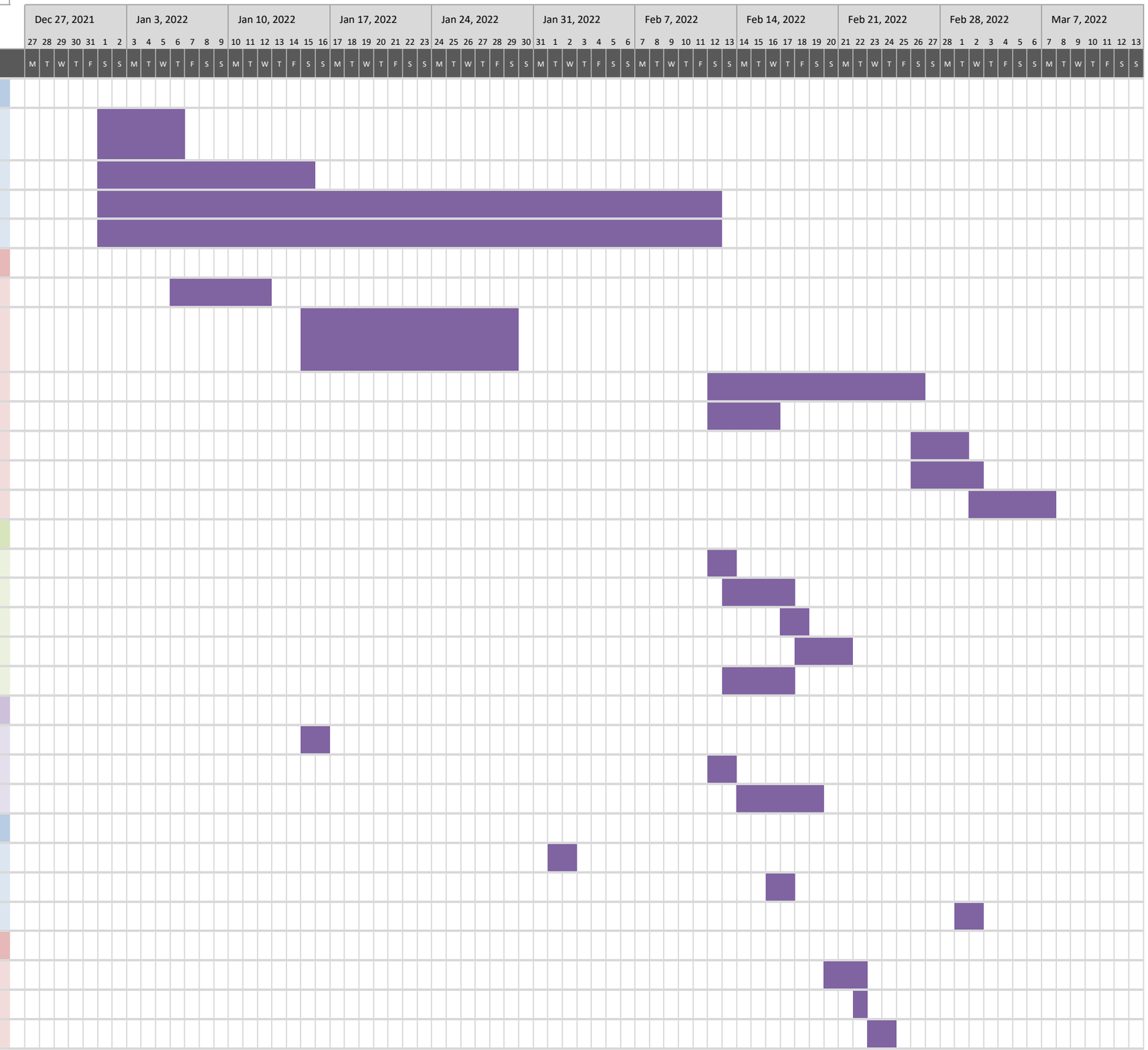

Display Week: 1

TASK	Description	START	END	DURATION	
De-energize system	Lock-out MCCs	2/24/22	2/25/22	1.00	0.14
7 - Operations Building					
Clean all surfaces	Washdown floors to sumps	2/22/22	3/1/22	7.00	1.00
Remove power from all sumps	Lockout process sump pumps that pump to liquids tank	3/1/22	3/2/22	1.00	0.14
Vac any remaining fluids	Vac liquids from all process sumps	3/2/22	3/3/22	1.00	0.14
Lock-out process air handlers	De-energize makeup air units and odorous air blowers	3/3/22	3/6/22	3.00	0.43
Remove activated carbon bed	Vacuum activated carbon from odor scrubber and landfill (contracted service)	3/3/22	3/8/22	5.00	0.71
Insert new rows ABOVE this one					

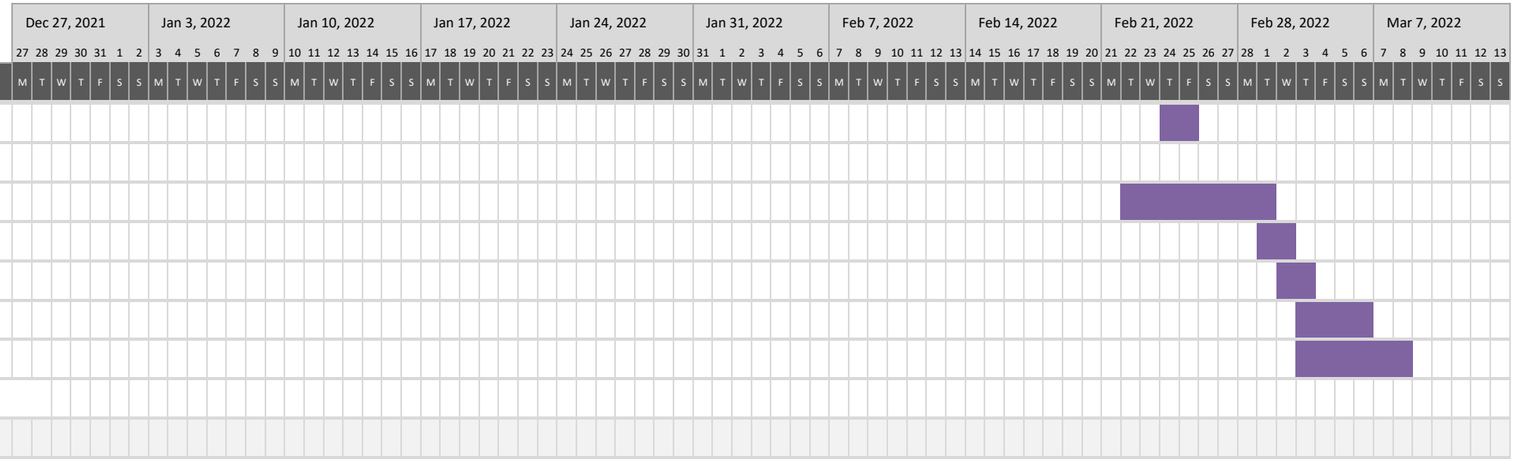

APPENDIX B
COST ESTIMATION CALCULATIONS

©2021, DAI Environmental, Inc.

Green Era Digester-Closure and Decommissioning
Labor and Equipment Costs for Dewatering of Digestate

Labor	$	75,600.00	
Equipment	$	18,000.00	
Consumables	$	26,688.00	
	$	**120,288.00**	(or $0.06014/gallon, not including MWRD surcharges)
LABOR: Working days		42	
weeks		6	
men		2	
hours/day		10	
billable rate		90	$/h
labor per day	$	1,800.00	
total labor	**$**	**75,600.00**	
Equipment	$	3,000.00	$/week
total equipment fee	**$**	**18,000.00**	
polymer cost		2,000,000	gallons
% total solids		4.0%	%
lbs of solids		667,200	dry lbs of sludge
bone dry tons		333.60	dry tons
polymer per dry ton		20	lbs/dry ton
lbs of neat polymer		6,672	lbs
polymer unit cost/lb		$4.00	$/lb neat (100% active)
total polymer cost		**$26,688**	

Green Era Digester-Closure and Decommissioning-Estimate of MWRD Surcharges on Filtrate and Washwater

Notes	Source	Estimated Volume (gallons)	Assumed BOD Conc. (mg/L)	Assumed TSS Conc. (mg/L)	BOD (lbs)	TSS (lbs)	Volume Surcharge ($)	BOD Surcharge ($)	TSS Surcharge ($)	Total MWRD Surcharge Costs	Labor, Polymer, Equipment Costs	Total Costs
1	Filtrate	1,680,000	3,750	2,000	52,574.08	28,039.51	$460.00	$10,668.86	$3,303.33	$14,432.19	$101,035.20	**$115,467.39**
2	Digester Wash	60,000	20,000	20,000	10,014.11	10,014.11	$16.43	$2,032.16	$1,179.76	$3,228.35	$3,608.40	$6,836.75
3	Eq Tank Wash	30,000	30,000	30,000	7,510.58	7,510.58	$8.21	$1,524.12	$884.82	$2,417.16	$1,804.20	$4,221.36
4	Building Wash	50,000	15,000	15,000	6,258.82	6,258.82	$13.69	$1,270.10	$737.35	$2,021.14	$3,007.00	$5,028.14
Total Wash Vol.		140,000						**Combined Surcharge Costs for Wash Water**				**$16,086.26**
		Volume Rate =	$ 273.81	per million gallons								
		BOD Rate =	$ 202.93	per thousand pounds								
		TSS Rate =	$ 117.81	per thousand pounds								

Footnotes

1 Volume of Digester only, as volume in equalization tank to be disposed off-site under worst case scenario

2 Assume about 2' of tank volume. Any sludge with higher TS will be vacuumed, screened, and dewatered.

3 Any volume with higher TS will be fed to the digester. The EQ tank will be cleaned prior to the digester.

4 Allowing for washdown of below slab tanks.

Decommissioning and Closure-Green Era Digester; 650 W. 83rd Street, Chicago, IL

Estimate of Cake Production by Processing of Digester Contents plus 30,000-gallons in-building storage, at Closure

Volume of digestate to dewater

1,710,000	gallons	x	8.34	lbs/gal	x	4.0%	TS [sludge]	=	570,456 lbs of solids (dry)
570,456	lbs	/	20%	TS [cake]	/	2000	lbs/ton	=	1,426 tons of cake

Transportation and Tipping Fees

Urban Growers is assumed to accept 100% of the cake for composting at no tip fee.

$150	$/hour trucking	x	2 hours assumed round trip time		/	20	tons/load	=	$15 transport cost $/ton

1,426	tons[cake]	x	($15 transport cost per ton		+	0 tip fee	)	=	$ 21,392.10
1,426	tons[cake]	x	($45 removal/dispose per ton		+	0 3rd party	)	=	$ 64,176.30
			Total Costs to Remove and Transport to Off-Site					=	**$ 85,568.40**

EMERGENCY RESPONSE PLAN
Doc. No. MP-06
Green Era
Organics Recycling Facility

650 W. 83rd Street
Cook County, Chicago, Illinois 60620

Prepared By
Green Arrow Engineering
2759 Long Road
Wooster, OH 44691

REVISION LEVEL	DESCRIPTION	ISSUE DATE
R0	INITIAL RELEASE	10/2/21
R1	ADDED FIRE SAFETY AND PREVENTION PHONE NO. TO CALL FOR INSPECTION AND SAFETY WALK-THRU	10/25/21

Table of Contents

Introduction **1**

1.1 Purpose 1
1.2 Operator Responsibility 1

Control of Releases to the Environment **2**

2.1 Introduction 2
2.2 Notification Procedure 2
2.3 Spill Control 2
2.4 Noise Control 3
2.5 Vector Control 3
2.6 Solid Waste Confinement and Exterior Dust Control 3
2.7 Unauthorized Waste Control 3
2.8 Unusual Traffic Conditions 3

Equipment Breakdown/Facility Shutdown **4**

3.1 Introduction 4
3.2 Equipment Breakdown/Unplanned Maintenance 4
3.3 Facility Shutdown 5

Emergency Response **6**

4.1 Fire Protection 6
4.1.1 Introduction 6
4.1.3 Explosion 7
4.1.4 Personal Injury 7
4.2 Site Evacuation 7
4.3 Local Response Agency Arrangements and Plan Coordination 8

Responder Information **9**

5.1 Local Fire Department 9
5.2 Local Police Services 9
5.3 Emergency Medical Services/Hospitals 10
5.4 Government Response Agencies 10
5.5 Facility Operations Managers /Facility Emergency Coordinators 11

1.0
Introduction

1.1 Purpose

This *Emergency Response Plan* addresses potential hazards that may be encountered during the operation of the Green Era Anaerobic Digester (AD) Facility, and how they would be addressed. The potential hazards include releases into the environment, fire, explosion, chemical spills, equipment breakdown, noise, odor, vectors, and personal injury. However, it should be noted that this plan does not address all possible emergencies or hazards that may occur at the facility.

1.2 Operator Responsibility

It is the sole responsibility of the Green Era Plant Manager to ensure that the facility will be operated, at a minimum, in conformance with the Occupational Safety and Health Agency (OSHA) regulations detailed in 29 CFR Part 1910 and to be compliant with any conditions delineated the AD Facility's permits, NPDES, Air, and any other pertinent local regulations, so that the health and welfare of all workers and the public at large will be adequately safeguarded.

A copy of this plan, along with all pertinent lists, to include address and phone numbers, of all concerned emergency agencies, as presented in Section 5.0 of this report, shall be conspicuously posted at the facility. All operating personnel will be required to become familiar with this plan so that emergency procedures can be implemented immediately with only quick reference to the plan.

2.0

Control of Releases to the Environment

2.1 Introduction

This section addresses potential releases to the environmental and actions to be taken by personnel in the event that there is an inadvertent release.

Emergency equipment maintained at the facility to address contingencies includes fire extinguishers, spill control equipment, internal and external communications systems, alarm systems, protective clothing, respirators, eye protection and eyewash facilities. The emergency equipment will be maintained within the office located at the AD Facility.

2.2 Notification Procedure

In the event of a spill or any release to the environment, the employees of the facility will be instructed to contact the Plant Engineer/Plant Manager or most senior person at the AD Facility for immediate assistance and will relay the exact location of the spill and time of the spill. The person notified will determine the extent and nature of the spill and/or environmental release, the source of the spill will be halted (if possible) and the area of the spill will be contained. Once the extent of the spill and/or environmental release has been determined, the person notified will direct remedial efforts (including determining equipment needed for clean-up), as outlined in this section of the *Emergency Response Plan*.

2.3 Spill Control

Refer to the Green Era Spill Contingency Plan, document number SOP-21-001.

2.4 Noise Control

Operation of the AD Facility may result in short-term noise effects due to activities that will occur. All activities will comply with local regulations.

2.5 Vector Control

If encountered, vectors will be controlled by extermination.

2.6 Solid Waste Confinement and Exterior Dust Control

Appropriate methods of exterior dust control would be determined by the surfaces affected (i.e., roadways or disturbed areas) and would include, as necessary, the application of water (through the use of a water truck or equivalent) to minimize fugitive dust.

2.7 Unauthorized Waste Control

All waste will be visually inspected for gross contaminates (both unauthorized and hazardous) that could cause downtime for the processing equipment.

If hazardous waste is found in any feedstock load, the Plant Manager will be notified and the waste will be removed and segregated into a separate storage area until it can be picked up by a licensed hauler.

2.8 Unusual Traffic Conditions

In the event of unusual traffic conditions, an accident or traffic congestion, Green Era could hold all outgoing trucks/trailers at the facility if needed. All incoming trailers that are controlled by the owner will be contacted by CB radio or phone and advised to use alternate routes to the facility or to remain at the last location or at a convenient stopping place until the unusual traffic condition subsides. Due to the nature of the business, Green Era will have little or no control over the vehicles delivering raw food waste or grease trapping waste to the facility because these vehicles are not owned and operated by the owner of the facility.

3.0

Equipment Breakdown/Facility Shutdown

3.1 Introduction

In the event of malfunction of the facility's equipment, several alternatives depending on the magnitude of the equipment malfunction will be available to the AD Facility.

3.2 Equipment Breakdown/Unplanned Maintenance

A preventative maintenance program will be written and implemented for all equipment, facilities, and general infrastructure at the facility. As part of the preventative maintenance program, wear parts will be identified for each piece of equipment. Wear parts will be inspected and changed at an appropriate frequency to prevent unplanned equipment repair and breakdowns. Spare parts that are critical for equipment operation, and cannot be generally sourced within 1 business day, will be kept on hand at the facility. Maintenance and operation records will be kept for each asset. The SCADA system will automatically track operating hours for each motor.

At each step of the waste separation and treatment process, redundancy and overhead capacity will be planned to allow for both preventative and unplanned maintenance to occur without interrupting the overall facility's ability to accept and process waste.

The facility will be staffed with maintenance personnel trained in servicing the equipment and electrical systems. A plant engineer will serve as an additional resource for equipment servicing, continual improvement activities, and contingency planning. The SCADA incorporates continual process monitoring that detects equipment malfunctions and alerts/warns staff in addition to shutting down affected processes. Critical warnings and faults are distributed by text or email by the SCADA system to the responsible parties.

Cameras throughout the facility also feed live images to the SCADA for visual confirmation of activities and equipment operation.

3.3 Facility Shutdown

In the event of total facility shutdown, which will be longer than 24 hours, the facility will not accept any additional waste. The waste previously accepted at facility will be stored and processed. In addition, the Emergency Coordinator (Plant Engineer) (see Section 5.5) will immediately notify the **IEPA and CDPH** by telephone of the facility's shutdown.

4.0

Emergency Response

4.1 Fire Protection

4.1.1 Introduction

Fire protection equipment, including fire extinguishers will be provided at the AD Facility.

- Fire extinguishers will be available at all structures and buildings of the AD Facility as required. All fire extinguishers will be capable of fighting Class A, B, and C fires, as defined by the Underwriters Laboratories. The fire protection requirements for the facility will be coordinated with The Chicago Fire Department.
- The main building is also fully sprinklered.

4.1.2 Response

In case a fire is detected at the facility, personnel trained in emergency response will clear the area immediately and shut-off any fuel sources into the area from remote isolation valves. The Emergency Coordinator (see Section 5.5) will immediately assess whether the emergency response equipment maintained by the facility (including fire extinguishers) is adequate for the emergency at hand. If the Emergency Coordinator (see Section 5.5) determines that the facility can respond to the emergency in progress with the forces and equipment available, he/she will implement the appropriate action (e.g., fight fire with fire extinguishers). If he/she determines that the facility cannot respond to the fire with the equipment at hand, he/she will immediately contact the local fire department and ambulance company (see Section 5.1).

4.1.3 Explosion

In a case of an explosion at the facility, the Emergency Coordinator (see Section 5.5) will immediately shut-off fuel sources at the remote isolation valves, evacuate personnel from the area, and contact the emergency response units (fire, police and emergency medical services/hospitals) contained in Sections 5.1 through 5.3.

4.1.4 Personal Injury

Personnel working in and around the AD Facility will be responsible for their own safety as well the safety of others working around them. Personnel will only operate machinery and equipment in a safe and responsible manner. Visitors to the facility must report to the main office and be accompanied by qualified personnel within in the facility, unless otherwise authorized.

As part of their typical routine, facility personnel will visually inspect the facility, including machinery and other equipment, to detect potentially unsafe conditions that could lead to personal injury. Such conditions would immediately be reported to the Engineer/AD Facility Operator for his/her evaluation.

In cases of personal injury at the facility, the facility's Emergency Coordinator (see Section 5.5) will assess if the emergency response equipment maintained by the facility (e.g., first aid kits, eyewash areas, showers) is adequate for the emergency at hand. If the Emergency Coordinator (see Section 5.5) determines that the facility can respond to the emergency in progress with the forces and equipment available, he/she will implement the appropriate action (e.g., treat injured personnel with first aid kit). If he/she determines that the facility cannot respond to the injury with the equipment at hand, he/she will immediately contact the local emergency medical response unit(s) (see Sections 5.1, Fire Department and 5.3 Emergency Medical Services/Hospital).

In addition, the Plant Engineer or Plant Manager will record and report any work-related injuries, illnesses or fatalities in accordance with 29 CFR Part 1904.

4.2 Site Evacuation

In the event that the emergency response equipment maintained at the facility is inadequate for the task at hand, and the nature of the emergency is such that there is a real and present risk of injury to the facility personnel, the facility will be evacuated. Appropriate agencies, specifically The Chicago Fire Department, will be immediately notified of such a decision so that any dangers to the public at large may be promptly and adequately assessed. The facility's Emergency Coordinator (see Section 5.5) will make the decision to evacuate the facility and contact all staff and visitors at the facility by cell phone or in-person. The evacuation will proceed according to posted evacuation; personnel will

assemble in pre-designated assembly areas. Roll calls will be performed at the assembly areas so that all personnel may be accounted for.

Evacuation routes will be labeled as per 29 CFR 1910.37 and any applicable, local rules, and regulations.

4.3 Local Response Agency Arrangements and Plan Coordination

4.3.1 The Chicago Fire Department

The Chicago Fire Department will respond to 911 and fire calls with engine and truck companies from the nearest fire station. The contact telephone number and address is contained in Section 5.1 of this report. They will also respond to medical emergencies.

4.3.2 The Chicago Police Department

The Chicago Police Department will respond from the closest station, to all emergency calls at the AD Facility from either 911 or the precinct. The contact telephone number and address is contained in Section 5.2, below.

4.3.3 ER Medical Center

Holy Cross Hospital and St Bernard Hospitals are both nearby hospitals to the AD Facility with 24/7 emergency and trauma departments. Holy Cross Hospital is located at 2701 W 68th St Chicago, IL 60629. St Bernard Hospital is located at 326 W 64th St Chicago, IL 60621. The contact telephone numbers and addresses are listed in Section 5.3 of this report.

5.0

Responder Information

5.1 Local Fire Department

Chicago Fire Department – Engine 73
8630 S Emerald Ave
Chicago, IL 60620
Non-emergency station phone (773) 783-4648
Fire safety and prevention: (312) 744-4762

Chicago Fire Department – Engine 122 and Ambulance
101 E 79th Street
Chicago, IL 60619
Non-emergency station phone: not provided now due to security protocols. Call fire safety and prevention to schedule walk-thru for emergency services. May visit in-person. Dept. contacted on 10.25.21.
Fire safety and prevention: (312) 744-4762

Non-emergency main number: (312) 745-3705

5.2 Local Police Services

Chicago Police Department
7808 S Halsted St #7808,
Chicago, IL 60620
(312) 745-3610

5.3 Emergency Medical Services/Hospitals

St Bernard Hospital Emergency Room
326 W 64th St
Chicago, IL 60621
(773) 962-3900
Open 24/7

Holy Cross Hospital Emergency Room
2701 W 68th St
Chicago, IL 60629
(773) 884-9000
Open 24/7

WellNow Urgent Care
9501 S Western Ave
Chicago, IL 60643
(773) 344-9465
8A-8P daily, including weekends

5.4 Government Response Agencies

For an emergency spill

1. Call the Illinois Emergency Management Agency (IEMA) (217) 782-7860
2. Call the Chicago Local Emergency Planning Committee (LEPC) (312) 745-3133
3. Call the Illinois IEPA (217) 782-3637

For non-emergency items related to handling of feedstock, cake solids, or digestate.

Primary Contact at IEPA for solid waste/surface water
Primary Contact at CDPH for liquid waste facility/recycling

5.5 Facility Operations Managers /Facility Emergency Coordinators

Green Era Facility Plant Manager: Jason Feldman
773-710-2204

Green Era Facility Emergency Coordinator: Plant Engineer
Ned Mast
Green Arrow
nmast@greenarrowllc.com
330-465-9132

ODOR CONTROL PLAN

Doc. No. MP-08

Green Era

Organics Recycling Facility

650 W. 83rd Street

Cook County, Chicago, Illinois 60620

Prepared By

Green Arrow Engineering

2759 Long Road

Wooster, OH 44691

REVISION LEVEL	DESCRIPTION	ISSUE DATE
R0	INITIAL RELEASE	10/2/21
R1	ADDED CODE REFERENCES TO INTRODUCTION. ADDED REFERENCES TO APPENDICES	10/20/21
R2	UPDATED TABLE OF CONTENTS AND SECTION REFERENCES. INCLUDED ADDITIONAL CODE REF. TO 35 IAC Part 245.121. ADDED REFERENCE TO TRAINING LOG, LOG-21-0001	10/24/21

Contents

1 Introduction 2
1.1 Regulatory Mandate 2
2 Odor Control Plan 3
2.1 Ionization System for Primary Odor Control in Operations Building 3
2.1.1 Considered Odor Control Technologies 5
2.2 Reference facilities 6
2.2.1 References 7
2.3 Odorous Air Treatment for Green Era 7
2.3.1 Food Waste Odor Sources 10
2.3.2 Digestate Odor Sources 10
2.3.3 Quantitative Odor Generation Potential 11
2.3.4 Ionizer units for In-situ treatment 11
2.3.5 Activated Carbon Filter 12
2.4 Best Management Practices 13
2.4.1 Inventory Management 13
2.4.2 Housekeeping 13
2.5 Odor Monitoring 14
3 Training 16
4 Recordkeeping 16
5 References 17

Appendices

Appendix A: Equipment Specifications
Appendix B: Activated Carbon Guard Bed Sizing Calculations
Appendix C: Reference Drawings

1 Introduction

Green Era Educational NFP has developed a formerly vacant property addressed as 650 West 83rd Street in Chicago, Illinois into a food waste (solid and liquid) recycling (composting) facility to be operated by Green Era 83rd Street, LLC. The facility, referred to as the Green Era Renewable Energy and Urban Farming Campus (Green Era), will recycle food waste via conventional wet anaerobic digestion. In addition to anaerobic digestion (primary facility activities), the property will also be used for urban farming operations and as a community garden center.

1.1 Regulatory Mandate

Section 9(a) of the Illinois Environmental Protection Act (the Act) states that "No person shall cause or threaten or allow the discharge or emission of any contaminant into the environment…so as to cause or tend to cause air pollution…" Section 8 of the Act defines air pollution as "a menace to public health and welfare," as well as an emission that "creates public nuisances." Simply put, odors that the public find offensive are a form of air pollution that must be controlled.

Additionally, 35 IAC Part 245.121 states that an "objectional odor nuisance" exists:

> a) On or adjacent to residential, recreational, institutional, retail sales, hotel or educational premises when odor is detectable in the ambient air after it is diluted with eight volumes of odor-free air as measured by the Scentometer;
>
> b) On or adjacent to industrial premises when odor is detectable in the ambient air after it is diluted with twenty-four volumes of odor-free air as measured by the Scentometer;
>
> c) On or adjacent to premises other than those above when odor is detectable in the ambient air after it is diluted with sixteen volumes of odor-free air as measured by the Scentometer;
>
> d) When concurrent determinations made by three trained inspectors as outlined above in any given one hour period and at intervals of not less than fifteen minutes result in two positive determinations in each series of three determinations; and
>
> e) Provided that any quantitative odor level measurements taken to arrive at a determination that an objectionable odor nuisance exists shall be at or beyond the property line or at or near places where people live or work.

Section 2.5 of this Odor Control Plan discusses the proposed use of the Nasal Ranger® field olfactometer to monitor for odors, which provides the same functionality as the Scentometer that is referenced in 35 IAC Part 245.121.

The City of Chicago also requires descriptions of odor control per Municipal Code Section 11-4-1520(A)(26).

Although the Green Era composting facility is not a landscape waste composting facility, compliance with odor control requirements of 35 IAC 830.206(g) may be viewed as best management practices. This Odor Control Plan has been developed to demonstrate methodology and procedures that the facility will follow to ensure compliance with all applicable regulations.

Additionally, because the chemical compounds in the air space of the processing building associated with odors are expected to include hydrogen sulfide and VOCs (both of which are "specified air contaminants" under IEPA regulations), the air permit application for the facility identifies the processing building as an emission source and the ionizers and activated carbon guard bed as air pollution control equipment. Requirements to obtain Construction and Operating Permits for new sources of emissions are contained in 35 IAC 201.142 and 201.143.

A "Specified Air Contaminant" is defined under 35 IAC 201 as: *any air contaminant as to which this Subtitle contains emission standards or other specific limitations and any contaminant regulated in Illinois pursuant to Section 9.1 of the Act.*

2 Odor Control Plan

Green Era recognizes that when handling and processing food waste, odors must be actively monitored, managed, and controlled. Every effort is made to reduce the occurrence of odor on the site.

- Trucks delivering food waste to the facility will be covered. Liquid tankers will be sealed.
- All waste receiving and processing will occur within the Operations Building (B-100).
- The processing building doors will only be opened when vehicles are entering or exiting.
- Waste will be tipped directly to live bottom hoppers to minimize open handling.
- Putrescible waste will be processed the same day as it is received.
- Receiving tanks and process equipment in the Operations Building will be directly vented to the odor control equipment.
- Separated packaging from the food waste will be loaded into enclosed compactors.
- Digestate solids separation (dewatering) and cake solids loading will be performed in the Operations Building.
- Trucks hauling digested solids (cake) from the facility to Urban Growers Collective will be tarped.
- Trucks tipping waste will drive on a clean concrete floor and tip into a bin on a lower level. Rinse water will be provided in the building if they need to clean their tailgate prior to exiting.
- Daily housekeeping will be performed to rinse organics from processing equipment.
- The process ventilation system will keep the Operations Building under slight negative air pressure (-0.08 to -0.1 inWC) to minimize any fugitive emissions when doors are opened for entry or exit.
- Three stages of odorous air treatment will be installed. Ionizers within the process building will reduce primary odorant concentration levels in the building to significantly improve the working environment for the employees. The ducted building exhaust air will be further treated by a high-output ionization reactor to oxidize remaining odorants from the building air and process equipment vents. The treated air will then be drawn through an activated carbon guard bed as a final step to ensure that no odors will be detectable in the ventilation air from the exhaust stack.

Odor source prevention and control measures such as minimizing feedstock handling, inventory control, and general housekeeping are just as important as odor abatement methods. Green Era will evaluate each process and standard operating procedure for its impact as an odor source continually improve odor source prevention strategies.

Employee awareness and sensitivity to the community will be promoted by regular and standardized olfactory monitoring (sniff tests), emission sampling, and building air quality monitoring and recordkeeping. The facility will also provide contact information by email and phone on the website for reporting odors in the neighborhood that are suspected to originate from the facility. An employee of Green Era will follow-up on each complaint and complete a standardized form to record the incident. Green Era's goal is zero complaints.

2.1 Ionization System for Primary Odor Control in Operations Building

Since all waste handling and processing is carried out in the Operations Building, odors generated from the waste handling will be contained by the building. The indoor air quality will be maintained by managing air flow rates through the building and with odor neutralization in the building through the use of ionized air.

Ionization of air principally creates positive and negative charged oxygen molecules. Any molecule with a positive or negative charge is called an ion. Oxygen ions can react with VOCs to form different more stable compounds such as carbon dioxide and water vapor. This process is effective at removing odorous compounds from the air. Ionization does not mask odors. Concentrations of odorous compounds such as hydrogen sulfide and ammonia will be directly reduced by ionization.

Ionization was selected for the primary active odor control equipment because this technology treats the building air in-situ and will improve the indoor air quality for Green Era's employees, truck drivers delivering waste to the facility, and for visitors.

Bi-polar ionization tubes look similar to a fluorescent light bulb in terms of construction. The end of the bulb has an electrical contact that fits into a bulb socket on the power source. An electrode inside the tube is energized by the power source. The glass tube serves as a dielectric insulator to keep the electrode separate from a metal mesh sleeve that slips over the bulb. An electrostatic discharge is produced when power is applied to the bulb. A neutral oxygen (O_2) molecule will lose an electron as it travels past the bulb. The loss of the electron will give that O_2 molecule a positive charge. The free electron will bind with another O_2 molecule and form a negatively charged ion. The ionized molecules are unstable and will only carry a charge for about 2 minutes. Due to the electrostatic force they will be drawn to neutralizing molecules or surfaces. The O_2 ions will react with VOCs to form benign compounds - for VOCs principally CO_2 and H_20. Other odorous compounds can also be oxidized. In the case of the hydrogen sulfide molecule, H_2S, the hydrogen will split from the sulfur to form water vapor and the sulfur will bind with 4 oxygen atoms to form SO_4 sulfate, which will precipitate as a solid. Nitrogen separated from hydrogen in the ammonia (NH_3) molecule will bind with other nitrogen atoms to form N_2 molecules. Free hydrogen will bind with oxygen to form water vapor.

Ozone (O_3) also has the potential to be created during ion formation. Since ozone is recognized as an air pollutant and is harmful to breathe above 0.1 PPM, the bulbs and controller are designed to limit production of ozone to less than <0.05 PPM.

FIGURE 2-1: PHOTO OF 5-BULB UNIT WITH POWER SUPPLY.

In a common configuration, sets of five bulbs are packaged with a small transformer that can be inserted into standard air handlers or metal duct. The bulbs are available in different lengths up to 20 inches (0.5 meter). These 5-bulb sets are banked together in groups to treat larger ducts. Some manufacturers also offer transformers for up to 24 bulbs. A bank of 24 bulbs draws less than 500 watts of power. The 24-bulb sets can also be banked together in large air handlers to provide the required capacity.

For Green Era, four separate air handlers in the building will circulate and ionize air in the feedstock receiving area near the reception bin and in the dewatering area, where most of the odor will be generated. Two air handlers in

FIGURE 2-2: 24 IONIZER TUBE BUNDLE WITH POWER SUPPLY SHOWN MOUNTED IN A DUCT SECTION FOR ILLUSTRATION.

dewatering area (W-032A, W-032B) will have flow rates of 4,000 SCFM and have two 5-bulb units with 10 bulbs per air handler. The two air handlers in the feedstock processing and receiving area will each have flow rates of 8,000 SCFM using two 4,000 SCFM fans and four 5-bulb units for a total of 20 bulbs (W-032C/D, W-032E/F).

A separate air handler outside the building (W-036) will have four 24-bulb units installed and will intensively ionize 4,120 SCFM of fresh outdoor air to mix with the 38,000 SCFM of building exhaust air to provide secondary treatment of the full exhaust stream. Some of the process equipment and all below slab liquid tanks are directly vented to the building exhaust blowers. The air in the process equipment cabinets and tank headspace will have minimal contact with ionized air. This secondary end-of-pipe treatment will primarily serve to reduce odorants introduced from that equipment and tanks. Since the two air streams are mixed in a duct, the contact between the ionized air and the odorant molecules will be guaranteed. A further 75% reduction in odorant concentration is expected from this treatment step. A subsequent carbon guard bed will receive the full air flow of 42,120 SCFM to ensure full treatment prior to exhaust independent of the ionizer performance.

Equipment specification sheets for the ionization equipment along with the other odor control equipment is provided in Appendix A of this Odor Control Plan.

2.1.1 Considered Odor Control Technologies

Three (3) different odor control technologies were evaluated, as discussed below.

2.1.1.1 Wet Scrubbers

A dual-stage wet scrubber was considered for this project. Wet scrubbers have been proven over years and thousands of installations to be extremely effective at treating H2S and ammonia gases, and would capture between 40 and 50% of VOCs. However, these systems require relatively high operational management and employee training. A wet scrubber also uses caustic and acid chemicals that aren't required for any other processes or operations at the facility. Pumps are needed to constantly circulate scrubber fluid through the packed bed to cross-flow with the air. For this site, insulation, heat tracing, and sump heaters would also be needed to prevent icing during winter operation. Chemical dosing pumps would automatically inject caustic or acid based on the fluid pH, but these systems need to be carefully monitored. From an operational cost and health/safety perspective, ionization was preferrable since it can be operated with minimal monitoring and maintenance and the process doesn't use any chemicals. Ionization is also more effective in treating odorous VOCs associated with food waste handling.

2.1.1.2 Bio-Filters

Biological systems are also commonly used for digester odor control. Natural or synthetic media biofilters provide surface area for odorant consuming bacterial populations to colonize. Contact times need to be relatively long compared to chemical treatment to allow the odorous air sufficient time to interact with the bacteria. Synthetic media requires nutrient and mineral solution to promote growth. Fixed film tricking filters are also sometimes used, especially when hydrogen sulfide control is the primary objective. But traditional biofilters are biological systems that are sensitive to variations in odorant loading. The bacteria in a biofilter perform best if they have a constant food source, are held at steady temperatures, and are not allowed to dry out. With shift operations at Green Era the plant will have long periods with almost no odorant load when the plant is not receiving or processing waste. A three-day weekend with relatively low odorant load could make it difficult to maintain a healthy biological system. A biofilter also has to adapt and adjust to changing odorant composition. For a merchant facility like Green Era, this could be problematic as different feedstocks can have different VOC and odorant profiles - spoiled produce smells very different from spoiled milk. Biological systems take time to shift bacterial population to consume new VOCs and to adjust to large swings in concentration of the VOCs. Chemical scrubbers are relatively insensitive to changes in inlet concentration as the reaction is only driven by the presence of the chemical and contact with the odorant. Likewise, ions will oxidize odorants on contact and are only

sensitive to overloading if insufficient ions are being produced relative to the odorant concentration. Biofilters also require close monitoring and control in comparison to an ionizer. Also with the air flow requirement through the facility, a biofilter would require a much larger footprint than a packed tower scrubber or ionizers.

2.1.1.3 Activated Carbon

Activated carbon is often used for wastewater treatment plants to control odors especially for point sources from small buildings or process tankage and equipment. Activated carbon is a mature technology with thousands of installations for odor control and multiple companies that supply different carbons for specific applications. Virgin activated carbon will react with VOCs and bind them to the carbon. Activated carbon can also be impregnated with other chemicals to target specific odorants. Many manufacturers produce impregnated activated carbon to capture hydrogen sulfide that can hold 20 pounds or more of hydrogen sulfide per pound of carbon until it is saturated. Other engineered activated carbon products target ammonia. Activated carbon works as a fixed media filter and can be housed in relatively inexpensive tanks or vessels to contact with process air. Like wet scrubbers and the biofiltration, activated carbon is an end-of-pipe solution meaning the air needs to be captured and blown through the media to create the contact to enable the reaction. A disadvantage of activated carbon for air scrubbing applications is that it needs to be replaced as it saturates with odorant. This is an ongoing operational cost and the removed carbon generally needs to be landfilled. When used for primary odor control, the 30-year lifetime operating cost often is higher than for wet scrubbers or biofilters, especially for high odorant concentrations. An advantage though is that even with relatively short contact times of air to the media of around 1 second, activated carbon can completely remove targeted odorants to below olfactory detection limits. Like the biofilter and packed tower, air moving through the filter bed will have a significant pressure drop and requires electrical energy for a blower to overcome this loss. But other than the blower, an activated carbon filter does not require other mechanical equipment to operate and only requires minimal monitoring of the inlet and outlet pressures as well as removal efficiency to predict when a media change is needed.

While ionizers have the capability to fully treat odorous air from this type of facility, we recognize that this is an emerging technology with a relatively short performance history in comparison with the other solutions. Since this facility is sited in a location with close neighbors, we have chosen to pair the ionizers with an activated carbon guard bed to ensure full treatment. Doing so will provide a proven Best-Available-Technology solution in the activated carbon bed while also allowing the plant to benefit from the newer ionization technology by removing almost all of the odorant before it reaches the carbon bed. During periods of low inlet odorant concentrations, the ionized air will also regenerate the virgin carbon by reacting directly with the VOCs it has captured in its matrix. The ionized air is not able to regenerate impregnated carbon for hydrogen sulfide removal because the hydrogen sulfide will be chemically bonded with the reagent. But by minimizing the odorant inlet concentration to the guard bed and by regeneration of the virgin carbon, the bed life will be significantly extended.

The design specifications of the carbon guard bed are provided in Appendix A of this Odor Control Plan. The sizing calculations for the carbon guard bed are provided in Appendix B.

2.2 Reference facilities

Ionization technology has proven to be effective at controlling odors at food waste digesters in the UK that are similar in size to Green Era. A plant that was commissioned in 2020 in Aberdeen Scotland gained approval from the Scottish Environmental Agency to use ionizers as the primary odor control, also with an activated carbon guard bed (Scottish Environment Protection Agency, 2020). This facility is sized to receive and process 81,000 mTons per year of organics including pumpable and non-pumpable food waste, is located in a dense urban area, and was developed by the City of Aberdeen as a public project. It was noted as a factor in the permit decision that an ionization system was previously permitted by the UK Environment Agency for a 160,000 mTon/y food waste digester in Dagenham, East London in 2017 that is operating without odor concerns. The London facility was also granted approval based on the successful use of ionizers for odor control at another food waste plant at Widnes, England that was permitted in 2014. The Environment Agency noted in their decision that since implementation

at the Widnes site, there have been no odor complaints or concerns (UK Environment Agency, 2017). The Widnes Plant and the Dagenham facility are both operated by ReFood (https://refood.co.uk/about-refood/our-facilities/). Neither of these facilities have a secondary activated carbon bed and are only using ionization to control odors in their receiving and processing buildings. The ionization system was provided by CSO Teknik for these plants. Based on their experience with similar facilities, they state an effectiveness of 80% odor reduction within 1.5 meters of an odor source and 90% odor reduction within 3 meters of the odor sources. CSO Teknik markets their system in North America through Kusters Water and primarily have targeted waste water treatment facilities. The trademark name for the CSO Teknik's ionizer system is Terminodour.

Aerisa, a New York company, also provides ionizers systems for odor control. They have several installations in wastewater facilities for headworks and dewatering. Green Arrow engineers have visited two of these facilities. The Palm Valley 4 MGD plant in Goodyear, Arizona services an urban area near Phoenix and is directly adjacent to a major road, golf course, and subdivision. They implemented ionizers in their headworks building and dewatering building in 2007. This facility uses ionized air in the buildings for primary treatment along with a high-capacity ionization reactor on the ducted exhaust air to ensure full treatment. The building exhaust discharged at ground elevation from an air handler (Dodds & McBride, 2008). The plant operators reported that they have been complaint free when Green Arrow visited in 2016.

Varionix of Switzerland is another major supplier of ionizer systems for odor abatement and control. The trademark name for Varionix's ionizer system is Bentax. Green Arrow is working with a distributor based in Germany for these systems whom has application experience in sizing and layout for various applications including food and food waste processing and wastewater.

2.2.1 References

Dodds, B., & McBride, B. (2008). Odor Abatement and Cold Plasma Technology. *WEFTEC Conference Paper*, (pp. 1-12). Chicago. Retrieved Aug. 2021, from https://www.aerisa.com/library/

Scottish Environment Protection Agency. (2020, November 13). *PTO Aberdeen Digester Permit No. PPC/A/1188451.* Retrieved from Scottish Environment Protection Agency: https://www.sepa.org.uk/media/534392/1188451_permit.pdf

UK Environment Agency. (2017, February 6). *Permit Decision Report for permit number EPR/QP3735DL/A001, Dagenham AD Plant.* Retrieved from UK Environment Agency: https://assets.publishing.service.gov.uk/government/uploads/system/uploads/attachment_data/file/617612/Decision_document_.pdf

2.3 Odorous Air Treatment for Green Era

The odor control system will be installed to treat the building air from two major sources - raw organic food waste and digester effluent. The scrubber system is sized to treat 38,000 SCFM of odorous air. Make-up air will enter the building along the east wall. The fresh outdoor air is either blown into the building from the make-up air units or drawn in through the overhead doors when they are opened for entry or exit from the building. The primary make-up air handlers (*MAU-950 and MAU-951*) will each have 2.2 MMBTU/h output (2.4 MMBTU/h input) direct fired natural gas heaters to preheat the air during winter operation (Figure 2-3). All fans and blowers are powered by Variable Frequency Drives (VFDs) that will allow the fan speeds and airflow rates to be modulated by the control system. The primary make-up air units and the two primary building exhaust fans will be operated below

their nameplate capacities. This will provide both system resilience and flexibility in balancing the system after the start of operation to meet changing process requirements.

To promote air circulation in the building envelope, three ceiling hung 4,000 CFM air handlers (AH-954A-C) will draw air from near the ceiling, heat the air when needed, and discharge from registers at 8-feet above the floor (see M-813). Each air handler will be equipped with a 250,000 BTU/h direct fired natural gas burner (see M-710).

Feedstock processing and dewatering activities are centrally located in the building. Fresh makeup-air introduced along the east wall will be pulled toward the west wall by two scrubber fans via ducted inlet headers, each with roughly 30,000 CFM of capacity. This air flow will keep odorant concentrations to a minimum in the east half the building where trucks are delivering feedstocks by keeping the air moving from areas with low odor potential to areas with higher odor potential (*Figure 2-3*). The plant operator may choose to operate both of these units at reduced flow rates of at or below 19,000 CFM by slowing the fan speeds to maintain a negative building pressure. Or each unit can be operated independently at full capacity. Since the facility will not be processing waste 24/7, the blower flow rates may also be reduced during off-shift periods. This will be managed by the plant operators through the computerized control system and provides flexibility to adapt to changes in the plant operation.

The centrally located finished spaces in the building including the control room/office 113, electrical room 112, maintenance/shop room 115, and restrooms will have a dedicated HVAC system to supply fresh air from the outside. The rooms will be maintained under slight positive pressure (see drawing M-720). The boiler room/mechanical room 123 will have a separate ventilation fan to draw up to 22,000 CFM through the room to maintain 10 degrees above ambient during the summer (see drawings M-720, M-812).

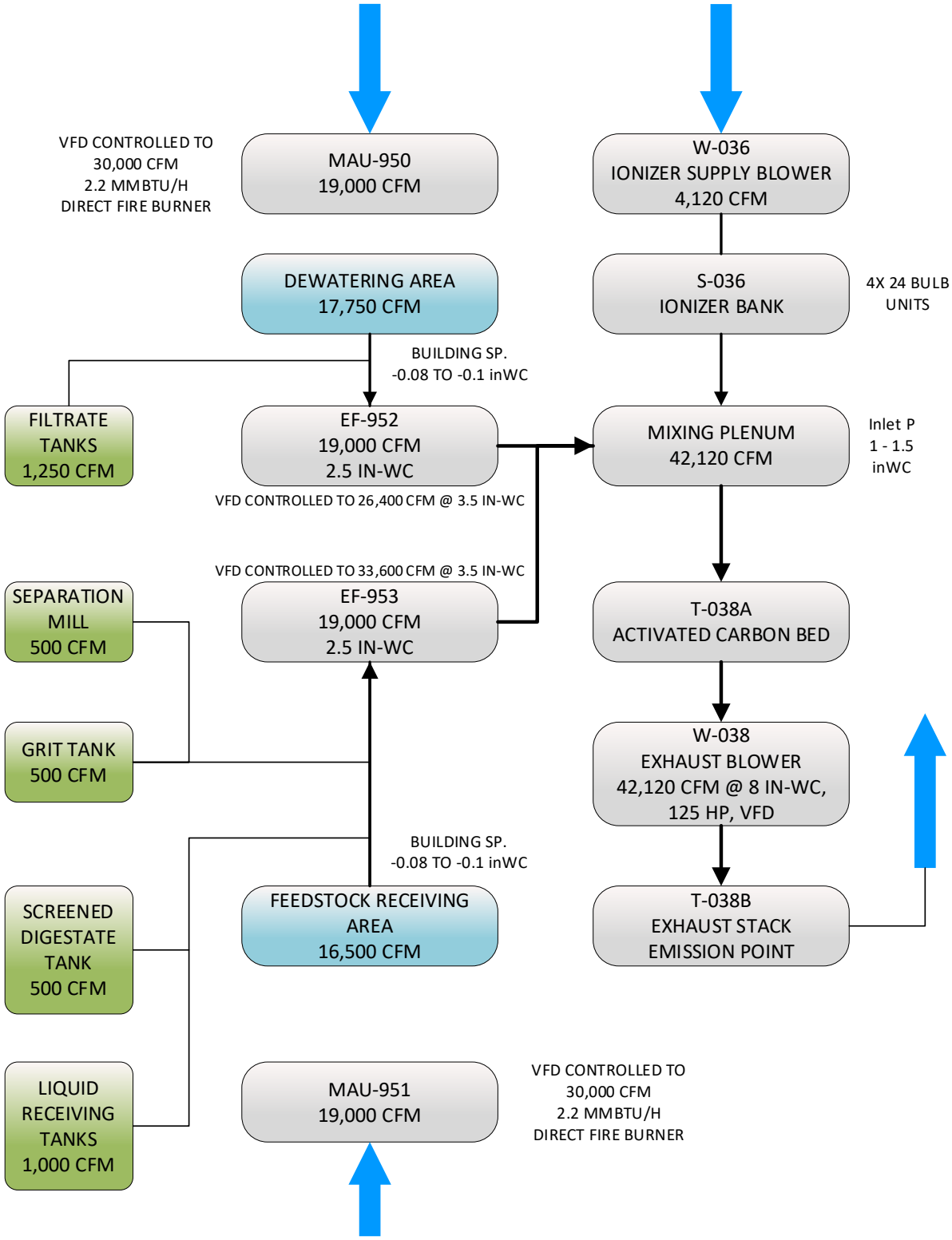

FIGURE 2-3: VOLUMETRIC AIR FLOWRATES IN OPERATIONS BUILDING

2.3.1 Food Waste Odor Sources

Untreated food waste will have a different odor profile than the digestate. Feedstock entering the facility may have already started to decompose prior to collection. Rotting food waste has the potential to produce odorants including sulfides, amines, and volatile fatty acids (VFA). Since material will be collected and transported to the facility in closed or covered trucks, odor from the material should not create a nuisance outside of the Operations Building. Trucks will enter the building through an overhead door and will back-up to the tipping wall. The material will be dumped from the truck directly into a live-bottom reception bin that is about 10 feet lower than the truck. The truck will be able to fully empty the load as the bed is raised. After tipping, the truck may pull forward and rinse off the tailgate with a garden hose prior to exiting the building. Negative pressure will be maintained within the building envelope and the receiving area.

Whenever the food waste is handled in the building it has the potential to produce unpleasant odors. Food waste odors will be most noticeable in the area around the solid food waste receiving bin. Odor will be strongest here when waste is tipped from a truck into the bin. The separation mill also has the potential to release odors as the wastes are pulped. An odorous air vent will be installed on the machine cabinet to actively remove any aerosol and can draw up to 250 CFM per machine (*Figure 2-3).* Circulating air handlers with ionizer bulbs will also be installed in this area to treat odors from the receiving bin and food waste processing.

Liquid food waste will be gravity discharged from tanker trucks to below-slab tanks through 4-inch or 6-inch hoses. All the below grade tanks will be directly vented to the odor scrubber supply header. Exhaust fan EF-953 will drawn building air through the tank headspace. The return ducts will be balanced so that the draw through each tank is about 500 CFM (*Figure 2-3*). The negative pressure in the tanks relative to the building envelope will prevent odorous air from being released into the building when trucks are discharging to the tanks. The below-slab process tanks each have about 34,000 gallons of empty volume. 500 CFM flow rate per tank will provide more than 6 ACH when the tanks are empty.

2.3.2 Digestate Odor Sources

After pulping and digestion, most of the organic will have been removed from the waste and the remaining effluent will be considered ‘stabilized’. Stabilized digestate will also be odorous, but will have a different odor profile from the raw waste. Since it is stabilized, the odors will be much more uniform and shorter lived than from rotting food waste. Hydrogen sulfide and ammonia are the predominate odorants expected from the digestate handling. Most of the odorant will be released into the building as the sludge is distributed onto the dewatering belt. Ventilation returns are located directly over the belt press positions. This same process is used by municipal treatment plants to dewater digested biosolids.

The dewatering belt press is located on the main floor adjacent to the south end of the lower level, between building column lines 2 and 3. Separated filtrate will gravity drain into two concrete filtrate tanks below the press area. The tanks bulkhead to the lower level. Cake solids are conveyed from the press and loaded onto a truck dump trailer or a roll-off box. The truck will be parked under a distribution conveyor in the bay adjacent to the press. Four ducted exhaust vents are located in this area each with 4,400 CFM nominal capacity and are the only suction inlets for exhaust fan EF-952 (see M-813). The fan speed of EF-952 can be varied and can be increased up to 22,400 CFM when feedstock processing isn’t operating. The building envelope with have a gross air change rate of 1.7 ACH when at 38,000 CFM.

In-ground tanks and enclosed equipment will have dedicated ventilation ducts with control dampers to maintain negative pressure within their respective volumes. The process equipment ducts will connect to the exhaust fan ducts inside the building. The exhaust fans will draw air from the equipment and the system will be manually balanced.

2.3.3 Quantitative Odor Generation Potential

Table 2-1 lists the expected maximum concentrations of the odorants ammonia and hydrogen sulfide in each area with no reduction taken for the supplied ionizers shown in for the "untreated" totals. This model predicts a loading rate of 1.38 lbs/h of ammonia and 1.41 lbs/h of hydrogen sulfide. While other odorants will be present in the air, ammonia and hydrogen sulfide are easy for most people to identify by smell and the concentrations of these gases can be accurately measured with field instruments. The relative concentrations of these gases can be tracked over time allowing plant operators to measure and understand the impact of operational changes with respect to air quality.

2.3.4 Ionizer units for In-situ treatment

As introduced in Section 2.1, additional circulating air handlers will be positioned to deliver ionized air over the dewatering area and the feedstock receiving area. For this phase of construction, two air handlers in the dewatering area will provide 4,000 CFM each of ionized air (W-032A, W-032B). The registers will be adjusted to distribute over the press equipment and the cake handling conveyors. Two additional circulating air handlers, each with 8,000 CFM capacity, will be positioned over the solids receiving equipment to deliver ionized air over the reception bin, grit tank, and truck tipping area. Each of these air handlers will use twin 4,000 CFM fans to make 8,000 CFM of flow (W-032CD, W-032EF). The effectiveness of the ionized air handlers will be dependent on positioning to maximize contact potential between the odorous air and the ionized air. The supply registers can be adjusted after installation to change the airflow direction. Based on the published performance at other facilities, the ionizers are expected to achieve a minimum concentration reduction of 80% compared with the control condition without the ionizers operating. In *Table 2-1*, a 75% reduction was conservatively assumed for the process building sources treated by the circulating air handlers. Since the ionized air is not long-lived, it was assumed that the odorants from the process equipment and tanks would not be reduced in the process building. The full concentration would be extracted by the scrubber fans and would be reduced in the duct by the secondary ionizer bank that is injecting around 4,000 SCFM of ionized air and blending with the odorous exhaust air ahead of the carbon bed. A further 75% reduction is conservatively assumed in this stage. The remaining concentrations entering the carbon bed are expected to be 1.1 ppm of NH3 and 0.6 ppm of H2S when the ionizers are operating at a mass loading rate of 0.13 lbs/h for NH3 and 0.15 lbs/h for H2S.

VENTILATED AREA	Air pretreated with ionizers	FLOW RATE	NH3			H2S		
		SCFM	*PPMV*	*mg/m3*	*LBS/HR*	*PPMV*	*mg/m3*	*LBS/HR*
FEEDSTOCK RECEIVING AREA	Yes	16,500	9	6.4	0.396	4	5.7	0.352
SEPARATION MILL & GRIT TANK	No	1,000	10	7.1	0.027	10	14.2	0.053
LIQUID RECEIVING TANKS	No	1,000	10	7.1	0.027	20	28.5	0.107
SCREENED DIGESTATE TANKS	No	500	100	71.3	0.134	30	42.7	0.080
DEWATERING AREA	Yes	17,750	16	11.4	0.758	8	11.4	0.757
FILTRATE TANKS	No	1,250	10	7.1	0.033	10	14.2	0.067
SCRUBBER TOTAL INLET	**untreated**	38,000	13.6	9.7	1.38	6.987	9.9	1.41
CARBON BED INLET W/DIULTION		42,120	12.2	8.7	1.38	6.303	9.0	1.41

			PPMV	*mg/m3*	*LBS/HR*	*PPMV*	*mg/m3*	*LBS/HR*
PRETREATED lbs/h					1.15			1.11
UNTREATED lbs/h					0.220			0.306

AFTER 75% REDUCTION	75%				0.29			0.28
TOTAL TO IONIZER CANON		42,120	4.5	3.2	0.51	2.6	3.7	0.58
CARBON BED INLET		42,120	1.1	0.8	0.13	0.6	0.9	0.15
CARBON BED OUTLET	99.0%	42,120	0.011	0.01	0.0013	0.006	0.01	0.0015

TABLE 2-1: EXPECTED ODORANT CONCENTRATION BY SOURCE/AREA (APPENDIX C: DRAWING 1512-500-01)

2.3.5 Activated Carbon Filter

This facility will use a vertical deep bed carbon filter (T-038) with 32 cubic yards of media capacity, a 20-inch bed depth, and a contact time of 1.25 seconds. The filter will be built into a 40-foot long standard shipping container and the filter bed will be subdivided into 16 cells, each with 2 cubic yards of media. The media can be loaded from the top of the container into each cell. A 4-mm pelletized carbon will be used instead of granular carbon. Pelletized carbons have lower pressure drops across the bed and will result in energy savings. The side walls of the bed will be made of 304 perforated stainless sheet with 1/8-inch holes on 3/16-inch centers and 40% open area. This unit will be located on the west side of the building adjacent to the two process area exhaust fans (*Figure 2-4*).

2.3.5.1 Breakthrough calculation

Sizing calculations for the carbon guard bed are detailed in Appendix B. Activated carbon is effective at trapping odorous molecules, but the media does have a finite capacity. After the media becomes saturated it can no longer capture additional odorants. Breakthrough of the carbon bed occurs when some of the odorant slips through the bed without being captured by the carbon. Breakthrough quantitatively occurs when the odorant concentration in the exhaust stack exceeds detection thresholds. Green Era will measure and track the H2S concentration level in the exhaust gas stream and use this data to monitor bed life and system performance in addition to daily site odor observation. Green Era's goal is to have no offsite odors and to have no odor complaints.

The predicted maximum hydrogen sulfide loading rate to the carbon bed is calculated at 1.41 lbs/h. This assumes that the ionizers do not perform and will not provide any reduction of hydrogen sulfide. The carbon holding capacity is rated at a minimum of 0.3 g/cc of carbon per ASTM test method D-6646. For estimating the breakthrough time on the planned carbon bed, 50% saturation capacity of hydrogen sulfide is assumed or 0.15 g/cc. With the 32 cubic yards of carbon, more than 8,000 pounds of hydrogen sulfide could be captured (Appendix B, eq. 11).

The minimum time for breakthrough of the carbon bed is calculated to be in excess of 5,000 hours (Appendix B, eq. 12). The expected odorant loading rate to the carbon bed is much lower. Assuming that the ionizers reduce the odorant levels by 75%, 0.15 lbs H2S/h will need to be scavenged by the activated carbon. The breakthrough time at this loading rate is calculated as more than 54,000 hours or 6 years (Appendix B, eq. 13).

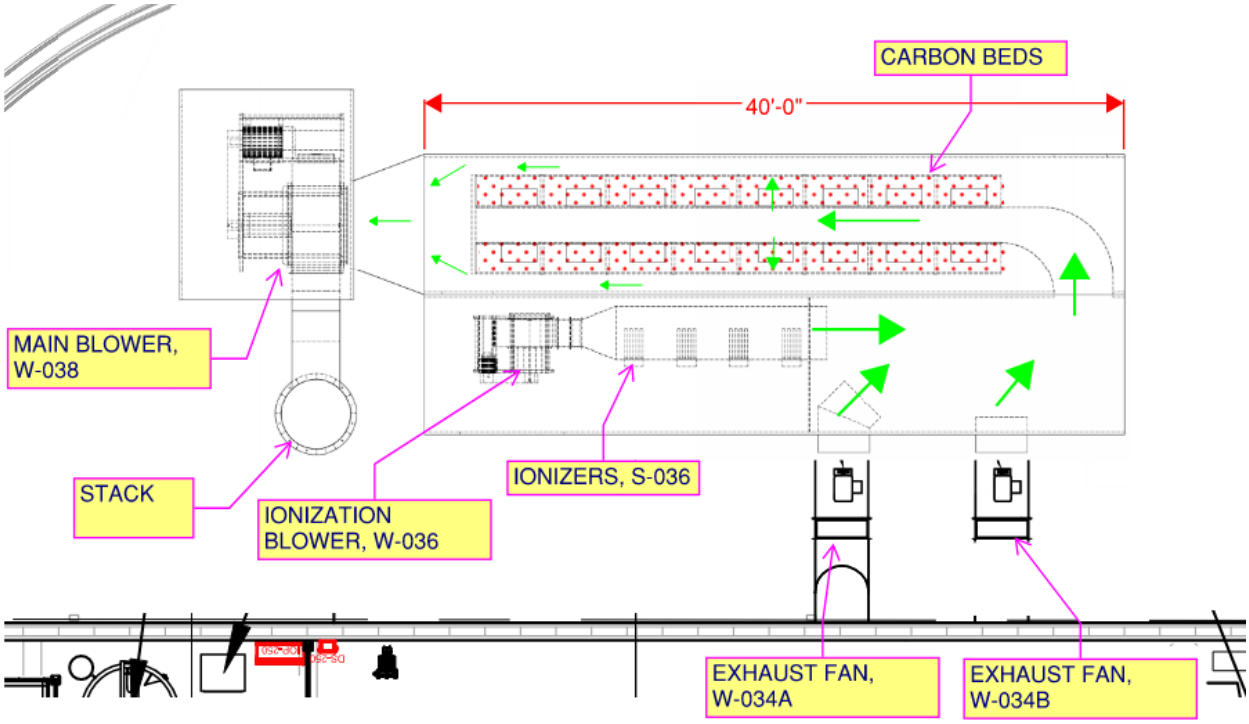

FIGURE 2-4: IONIZATION REACTOR AND CARBON GUARD BED LAYOUT FOR TERTIARY ODOR CONTROL

2.4 Best Management Practices

2.4.1 Inventory Management

Putrescible feedstock will be processed the same day it is received. The receiving bin will be emptied at least once per day and hosed down. This facility will not store feedstock inside the building unless it is palletized and packaged. Cake solids will also be removed from the building daily and not stored in trailers.

2.4.2 Housekeeping

Good housekeeping practices will be adopted as part of normal operations to minimize odors throughout the facility. The SSO receiving area floor will be scraped clean at the end of the day and may be flushed with water. All SSO handling stations and equipment will have wash down hoses nearby to allow for the machines to be cleaned daily. Self-recoiling hose reels will be used wherever practical. Catwalk access, equipment placement, drainage, building materials, and general design will all be assessed during planning to enable easy maintenance and cleaning of all plant areas. Green Era recognizes that keeping the equipment and building clean and free of organics will be critical to maintaining a comfortable and safe working environment.

2.5 Odor Monitoring

Green Era's Owners recognize that odor control is requisite to the success of this facility. Having reliable data is key in managing any process and in evaluating performance. Green Era will take a proactive approach to odor management by implementing odor observation and monitoring as a daily routine.

Green Era employees will monitor odors around the Facility, at the property boundaries, and quantify the relative strength of detected odors using a Nasal Ranger® field olfactometer *(see Figure 2-5)*. The field olfactometer provides a method, recognized by the US Public Health Service and other regulatory agencies, to determine the relative strength of odorous air.

FIGURE 2-5: NASAL RANGER FIELD OLFACTOMETER

The olfactometer dilutes odorous ambient air with odor-free (carbon-filtered) air. The dilution factor is defined as the Dilution-to-Threshold ratio (D/T), which is the number of dilution volumes per part of ambient air needed to make the odorous air non-detectable to the observer. The Nasal Ranger allows two volumes of carbon-filtered air (two carbon filters) to be mixed with specific volumes of odorous ambient air. The dilution factor is adjusted with an aperture dial on the device.

Dilution Factor = Volume of Carbon Filtered Air / Volume of Odorous Air = D/T

The facility will also install a local weather station to log wind direction, temperature, humidity and precipitation at the site. The odor measurements will be documented daily in an electronic log book that can be referenced to the weather conditions at the time of sampling.

The observer will also have the ability to describe the nature of any measured odors in the log and its apparent source. A standardized odor wheel will be developed and maintained for the facility to describe odors using common descriptors to facilitate the identification and discussion of odors. An example of an odor wheel that was developed for composters is shown below *(see Figure 2-6)*. Green Era will adapt this wheel to observed odors and consensus descriptors.

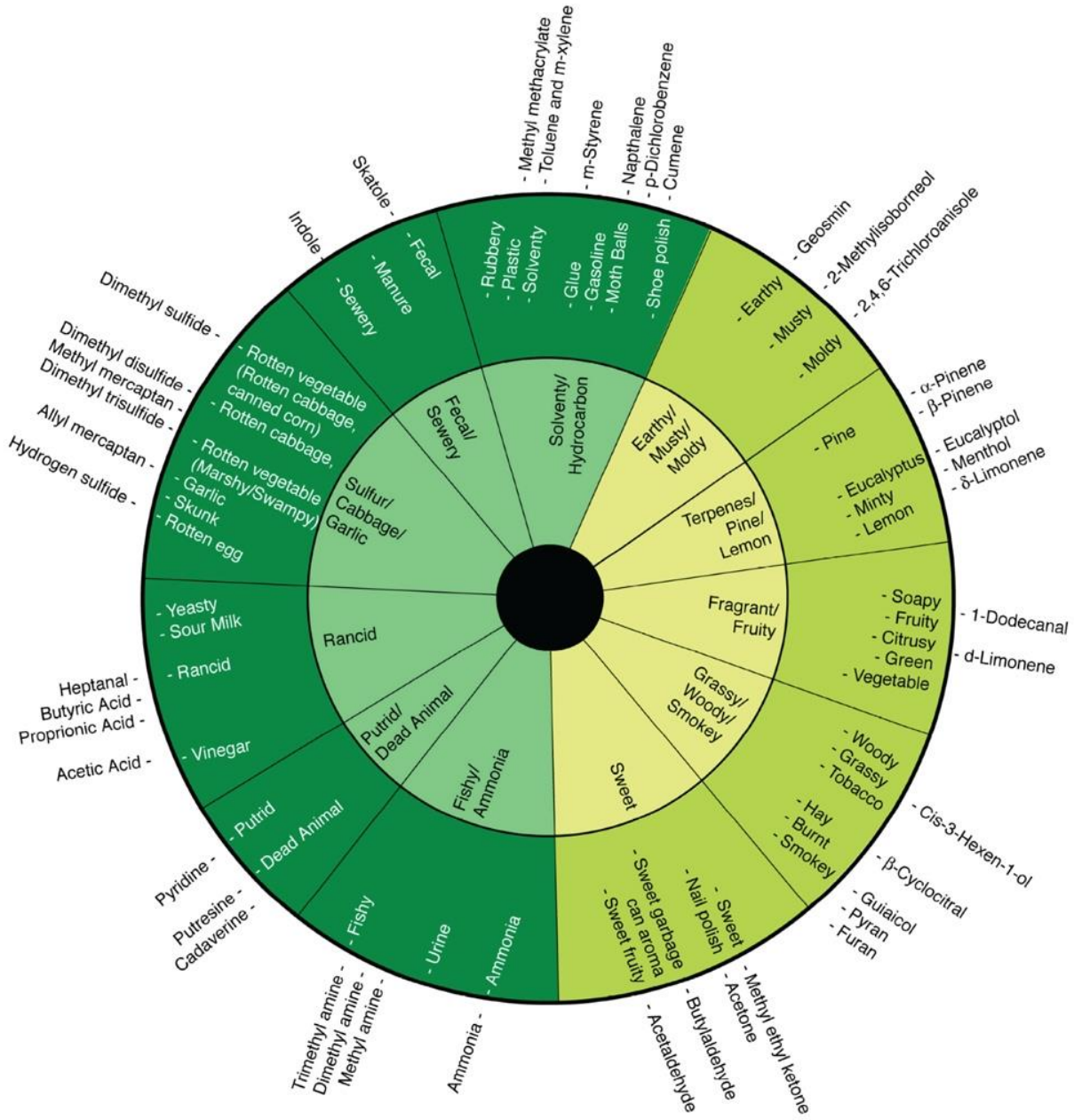

FIGURE 2-6: ODOR WHEEL

Observations will occur three-times daily along a defined onsite survey route. Regular odor observations will be made during facility commissioning prior to and during intermittent processing activities that generate odorous air which is captured and processed through the odor scrubbers.

The monitoring frequency may be reduced after the first year of operation, provided that the facility demonstrates no offsite impacts to the surrounding area.

An Odor Monitoring Plan (*MP-09*) that describes the procedures for daily odor observations has been prepared and included as part of the Operations Manual. An Odor Observation Form (*FORM-21-003*) has also been drafted that will serve as a record of the daily odor observations. The observation form may be modified when a specific

database system is selected to manage and store the collected records, but the basic required information will not change.

Odor complaints will be logged and responded to in a timely and professional manner. Telephone calls will be noted and a summary written. Written complaints, in the form of letters or e-mail will be saved to the record. Any responses or correspondence with the complainant will also be documented. An Odor Complaint Form record has been drafted (*FORM-21-004*). Each event will also be logged by date in an Excel workbook to track occurrences (*LOG-21-005*).

The Odor Complaint Form may be modified or adapted for the database application chosen to store the records, but the general information collected will remain the same. If the source of the odor is identifiable from a known normal or abnormal operating condition, the cause will be recorded in the complaint log. All odor occurrences that can be traced to a root cause will be recorded in such a way that it is searchable and referenceable to that root cause. When root causes of odor are identified that have generated complaints, an action plan will be implemented to mitigate the odor source or odor causing event. A reasonable timeline will be developed for implementing the controls and responsible parties listed. Success of the mitigation strategy will be determined by the number of subsequent observed occurrences for that cause. A form will be customized to handle the corrective action for odor complaints that follows the principles of eight discipline (8-D) problem solving and will be part of the Facility's overall quality system.

Odor complaints and actions will be maintained at the Green Era facility and will be available for regulatory inspection. Odor complaints and corrective actions will be summarized in the facility's annual report. The plant operations manager will be ultimately responsible for implementing this reporting system and maintaining the records.

3 Training

The Odor Control Plan will be fully reviewed and explained to all employees who work at the Facility per the *Personnel Training Plan (MP-04*). Specific practical training will be given on use of the Nasal Ranger and odor classification descriptors. The importance of accurately recording odor complaints and event logging will be stressed. *The Odor Monitoring Plan (MP-09)* will be reviewed and explained at the same time for employees who may be tasked with daily observations. Training will be recorded using LOG-21-001.

4 Recordkeeping

All records will be stored electronically and kept for at least 36-months from the record date. Records may be sent upon request to any regulatory agency of the City of Chicago or State of Illinois.

See *The Odor Monitoring Plan (MP-09)* for additional recordkeeping and reporting requirements.

5 References

a. MP-09 Odor Monitoring Plan

b. MP-04 Personnel Training Plan

c. FORM-21-003 Odor Observation Form

d. FORM-21-004 Odor Complaint Form

e. LOG-21-001 Training Log

f. LOG-21-005 Odor Complaint Log

g. LOG-21-007 Air Emissions Venting Log

h. LOG-21-008 Air Emissions Control Equipment Maintenance Log

Appendix A: ODOR CONTROL PLAN

Odor Control Equipment
Component Specs

Prepared By

Green Arrow Engineering

2759 Long Road

Wooster, OH 44691

REVISION LEVEL	DESCRIPTION	ISSUE DATE
R0	INITIAL RELEASE	10/19/21

Table of Contents

S-032 Ionization Reactor Bank	5-bulb fixtures and power supply	1
S-036 Ionization Reactor Bank	24-bulb fixtures and power supply	5
ENCL-036 Mechanical Container	Container for ionization reactor and blower	9
ES T-038	Vertical deep bed carbon filter	12
ES W-030ABCD	Building make-up air units MUA-950 and MUA-951	16
ES W-032AB	Ionization Circulation Fan, building	31
ES W-032CDEF	Ionization Circulation Twin Fan Unit, building	38
ES W-034A	Building exhaust fan EF-952	46
ES W-034B	Building exhaust fan EF-953	54
ES W-036	Ionization Reactor Blower	62
ES W-0389	Odor scrubber blower (main fan on carbon bed)	71

GREEN ARROW ENGINEERING	**Green Era** **Equipment Spec** **Odor Control Equipment**	

S-032 Ionization Reactor Bank

5-bulb fixture and power supply

REVISION LEVEL	DATE	DESCRIPTION	BY
R0	10/14/21	INITIAL RELEASE	NMAST

GREEN ARROW ENGINEERING	**Green Era** **Equipment Spec** **Odor Control Equipment**	

Section 1 - Basic Equip. Data		
1.0	Tag No.	S-032x-y where x corresponds to the fan letter and y is the unit number
1.1	Air from	W-032x, circulating room air via filter
1.2	Air to	Room
1.3	Purpose	Create a high charge density ionized air flow using circulating indoor air and distribute in areas of high odor potential. Ions to oxidize odorants in the building air prior to improve indoor air quality.

Section 2 – Fluid Properties								
2.0	Fluid Desc.	Indoor odorous air, circulation unit						
2.1	TS%	N/A	2.2	RH range	50-80%	2.3	Temp. range	55 - 100° F
2.4	S.G.	1	2.5	Viscosity	0.0187 cP	2.6	Phase	Gas
2.7	Flammable		No					
2.8	Abrasives	Moisture may be present.						
2.9	Corrosives	None						
2.10	Notes	Air is filtered prior to bulbs to extend bulb life.						

Section 3 – System Requirements		
3.0	Flow Range	2,000 CFM per 5-bulb set for this application
3.1	Duty	Continuous
3.2	Flow Velocity	~333 FPM, 5.6 FPS, 1.7 m/s

Section 4 - Power supply and bulbs					
4.0	Tube Type	F 530 (530mm lg)	4.1	Mfg.	Varionix of Switzerland
4.2	No. of Tubes	5	4.3	Model No.	KH5F-CRF-VTN-F
4.4	Supply Voltage	115VAC, power cable with C14 plug end	4.5	Weight	20 lbs, 9 kg
4.6	Controller	Power supply, switch, ICS controller. 1 A fuse. Power 86 watts			
4.5	Basic Dim	W x L x H inches: 10.4 x 26.8 x 8.27, mm: 264 x 680 x 210			

KH5F Series

Pollutants Degradation | Air Disinfection | Odor Elimination

Overview

The System KHF5 consist of a Base-System with five horizontal aligned BENTAX ® Ionization-Tubes. It can be mounted both outside with a mount-frame or inside in air-duct or Air Handling Unit (AHU). Different power-connection options are available.

Used for Air Cleaning, Air refreshing, Odor Elimination, Degradation of pollutants, Air sterilization, Air decontamination Installations in Air-conditioning systems (HVAC systems), air-conditioning and ventilation systems, and exhaust air-canals in industrial, office buildings, manufacturing facilities, wastewater treatment plants, waste air disposal

Example illustrations: System mounted in an air-duct

Specifications

Supply Voltage	**230 VAC ± 10% 50Hz 115 VAC ± 10% 60Hz**
Nominal Power Rating	**86 W**
Air Treatment up to *	**~ 4000 m^3/h**
Weight	**9 kg**

*** Depending on: Air Quality, VOC, VVOC, Air Change Rate**

Base Systems: KH5F

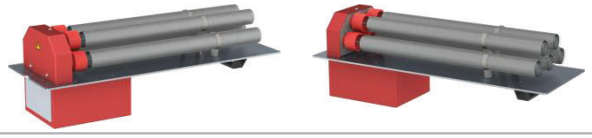

Power Connection Option: KH5F-[y]z

C1 Connection Panel, C14 socket ; Error Indicator; Switch; Fuse Box

C1C Connection Panel ,C14 socket ; Error Indicator; Manual/Auto switch ; Fuse Box ; Connector for remote on-off & Error output; with Controller Board

R Connection Panel; Round Plug & Connector 3 poles; IP64, external power controller needed

Other Connector Options on request

Mount-Frame Option: KH5F-y[z]

F Mounting Frame Set

Order Number KH5F System Configuration

Type	Voltage	Order #
KH5F-C1	230	KH-05-A-C1
	115	KH-05-B-C1
KH5F-C1F	230	KH-05-A-C1F
	115	KH-05-B-C1F
KH5F-C1C	230	KH-05-A-C1C
	115	KH-05-B-C1C
KH5F-C1CF	230	KH-05-A-C1CF
	115	KH-05-B-C1CF
KH5F-R	230	KH-05-A-R
	115	KH-05-B-R
KH5F-RF	230	KH-05-A-RF
	115	KH-05-B-RF

Copyright by Varionix Switzerland
Bentax® worldwide trademark of Varionix

KH5F Dimensions [inch] mm

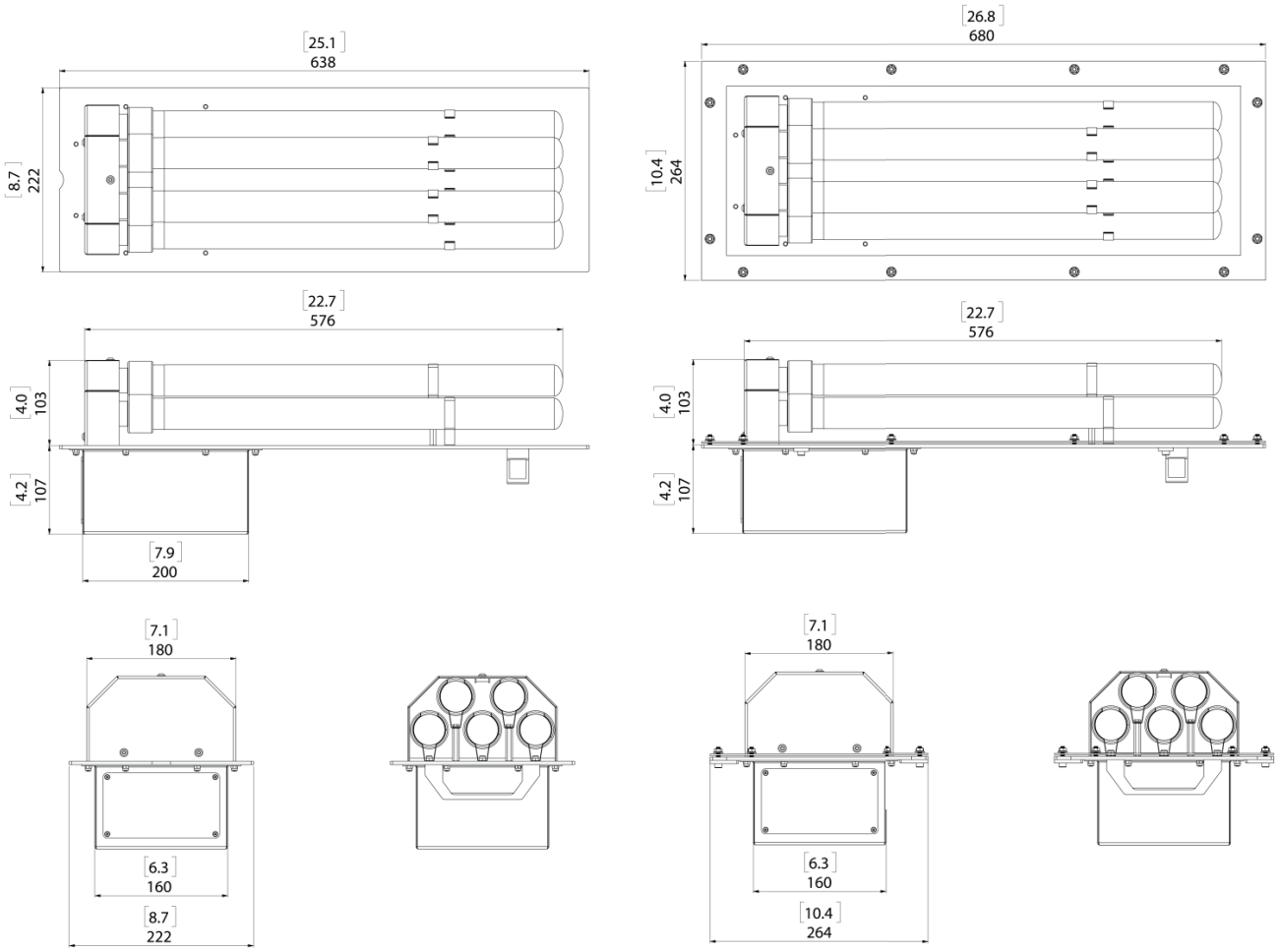

Copyright by Varionix Switzerland
Bentax® worldwide trademark of Varionix

S-036 Ionization Reactor Bank

Four 24-bulb fixtures and power supply

REVISION LEVEL	DATE	DESCRIPTION	BY
R0	10/14/21	INITIAL RELEASE	NMAST

GREEN ARROW ENGINEERING	**Green Era** **Equipment Spec** **Odor Control Equipment**	

Section 1 - Basic Equip. Data		
1.0	Tag No.	S-036-1, S-036-2, S-036-3, S-036-4
1.1	Air from	W-036, fresh air supply
1.2	Air to	U-038 Mixing plenum with building exhaust air (W-034A/B) prior to carbon guard bed (T-038A)
1.3	Purpose	Create a relatively high charge density ionized air flow using fresh outside air and immediately mix with 9 parts exhaust air from building. Ions to oxidize remaining odorants in the building exhaust air prior to the carbon guard bed to minimize bed loading and extend bed life. Ions can also regenerate carbon that has captured VOCs. But H2S that is chemically bonded to impregnated carbon cannot be removed.

Section 2 – Fluid Properties								
2.0	Fluid Desc.	Fresh Outdoor Air						
2.1	W.P.	2 inWC	2.2	RH	50-100%	2.3	Temp. range	5°-115° F
2.4	S.G.	1.0	2.5	Viscosity	Std.	2.6	Phase	Gas
2.7	Filtration Level		2-inch MERV?					
2.8	Abrasives	N/A						
2.9	Corrosives	N/A						
2.10	Notes	Fresh air used here to extend bulb life.						

Section 3 – System Requirements		
3.0	Flow Range	4120 CFM (7000 m3/h) - mixing downstream with 38,000 CFM
3.1	Duty	Continuous
3.2	Fan SP	2 inWC, 500 Pa
3.3	Flow Velocity	335 FPM, 5.6 FPS, 1.7 m/s

Section 4 - Power supply and bulbs					
4.0	Tube Type	F 530 (530mm lg)	4.1	Mfg.	Varionix of Switzerland
4.2	No. of Tubes	24	4.3	Model No.	IM24V-N-24xVTN-F
4.4	Supply Voltage	115VAC, power cable with C14 plug end	4.5	Weight	38 lbs, 17.3 kg
4.6	Controller	Power supply, switch, 1A fuse, ICS controller			
4.5	Basic Dim	W x L x H inches: 16.3 x 22.7 x 25.6, mm: 416 x 576 x 650			

IM 24 Series

Pollutants Degradation | Air Disinfection | Odor Elimination

Overview

IM24 is a system with 24 vertical aligned F-tubes, intended to mount in Air Handling Units (AHU) and/or Air-Ducts as Stand or Slide-In Installations
Applications are pollutants degradation, exhaust air treatment, air refreshment, air disinfection and odor elimination for industrial and commercial use.

Example illustration: System mounted in an air-duct as slide-in

Example illustration: System mounted standing in an air-duct

Specifications

Supply voltage	230VAC 50Hz or 115VAC 60Hz
Nominal Power Rating	480 W
Bentax® Tubes	Tubes VTN
Air treatment up-to *	18000 m^3/h

** Depending on: Air Quality, VOC, VVOC, Air Change Rate*

IM24 Base System Order Numbers

Type	Volt	Order #
IM24-C1	230V	IM-24-A0-C1
IM24-C1	115V	IM-24-B0-C1
IM24-C1C	230V	IM-24-A0-C1C
IM24-C1C	115V	IM-24-B0-C1C

Mount Options

IM24-OBF	---	IM-24-1Z-01
IM24-OMF	---	IM-24-1Z-02
IM24-OSF	---	IM-24-1Z-03

Base System IM24-xxx

IM24-xxx Base System
Included are 24 VTN-F Tubes as standard equipment.
-xxx: Power connector and Control unit equipment to choose

IM24-xxx Power Connector & Controller

-C1
Connection Panel, C14 socket ; Error Indicator; Switch ; Fuse Box

-C1C
Connection Panel ,C14 socket ; Error Indicator; Manual/Auto switch ; Fuse Box ; Connector for remote on-off & Error output; System equipped inside with Controller Board

Mounting Options

IM24-OBF
Set with Foot holder and Handles for installing the System on the floor in Air-Duct or Air Handling Unit

IM24-OMF
Set with Mount Frame for installing the System outside of an Air-Duct or Air Handling Unit.

IM24-OSF
Safety Frame
Mandatory with IM24-OMF
Optional with IM24-OBF

Copyright by Varionix Switzerland
Bentax® worldwide trademark of Varionix

Floor Standing Mounting Combinations

IM24-xx and **IM24-OBF = Floor Standing**

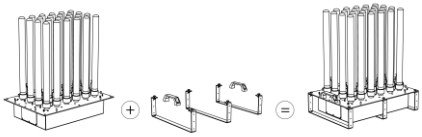

Floor Standing with Option IM24-OSF

Outer Panel Mounting (Slide-In) Combinations

IM24-xx and **IM24-OMF with IM24-OSF**
Must be ordered together

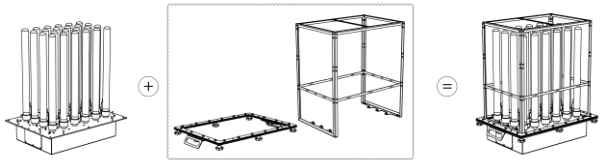

Dimensions (mm)

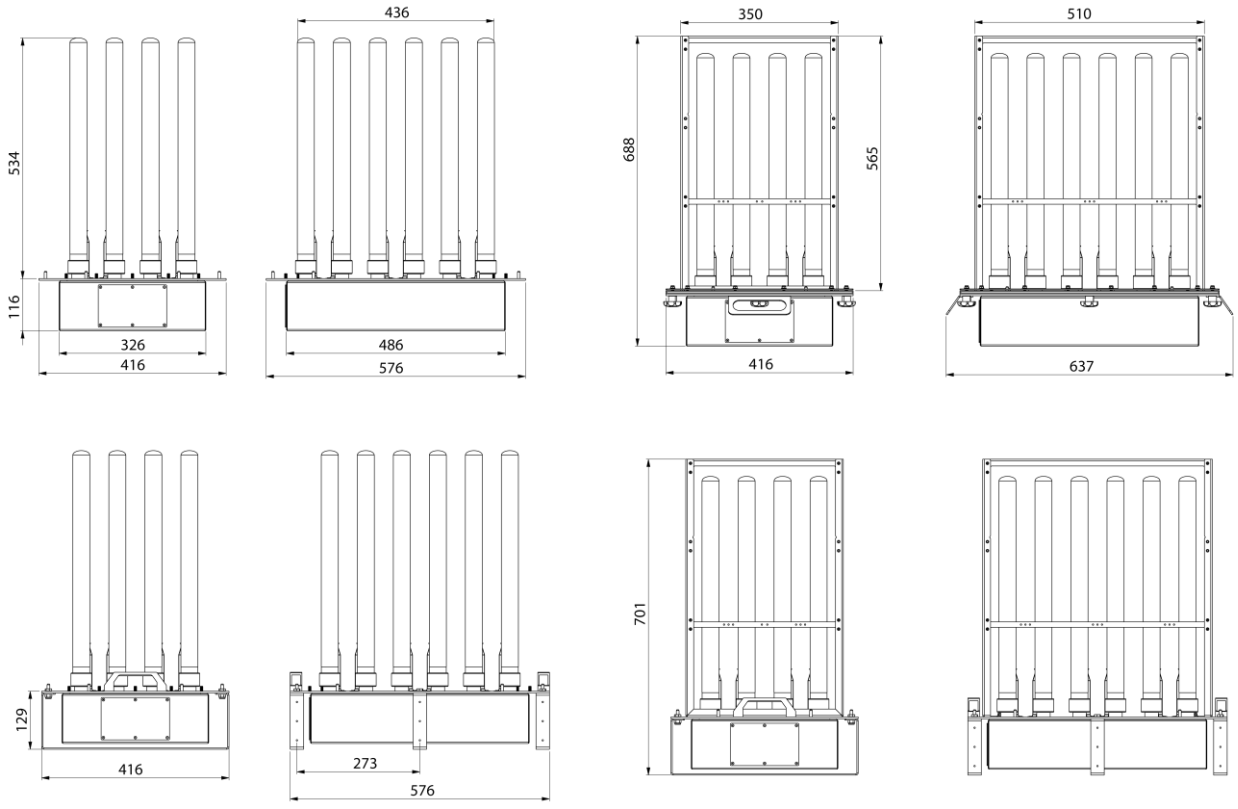

ENCL-036 Mechanical Container

High-cube ISO shipping container, 40-ft std. length. Modified to house blower and ionization banks in duct

REVISION LEVEL	DATE	DESCRIPTION	BY
0	10/18/21	INITIAL RELEASE	NMAST

Section 1 - Basic Container Information		
1.0	Tag No.	ENCL-036
1.1	Dimensions	9’-6” high x 8’-0” outside. 8’-10” x 7’-8” inside. 40’ long.
1.2	Construction Materials	Steel ISO container. Paint with industrial epoxy. Interior carbon cells from 304SS.
1.3	Foundation	By Others, Provide Loading
1.4	PE Stamp	State of Illinois for foundation. Container is not occupied.
1.5	Site Std. Conditions	See separate “Site Conditions for Green Era” specification document
1.6	Weight	Empty container is around 10,000 lbs. Estimated total weight <15,000 lbs
1.7	Electrical Connections	Lighting circuit in blower room, 110 VAC. Blower power, 3-ph, 460. Mount disconnect for blower inside door.
1.8	Insulation	Exterior container walls should be insulated to prevent condensation during winter operation. R10 or more. Dow board is acceptable or closed-cell spray foam.
1.9	Interior Partitions	Create interior partitions from mild steel sheet and framing members.

Section 2 – Fluid Properties – channeled through contact plenum								
2.0	Fluid Desc.	Odorous air from building, 38,000 CFM						
2.1	TS%	N/A	2.2	RH range	60-85%	2.3	Temp. range	55 - 100° F
2.4	S.G.	1	2.5	Viscosity	0.0187 cP	2.6	Phase	Gas
2.7	Flammable		No					
2.8	Abrasives	Dust and moisture will be present.						
2.9	Corrosives	H2S < 5 PPMV, NH4 < 10 PPMV, water vapor						
2.10	Notes	Combines with flow from ionization blower W-036 @ 4120 CFM						

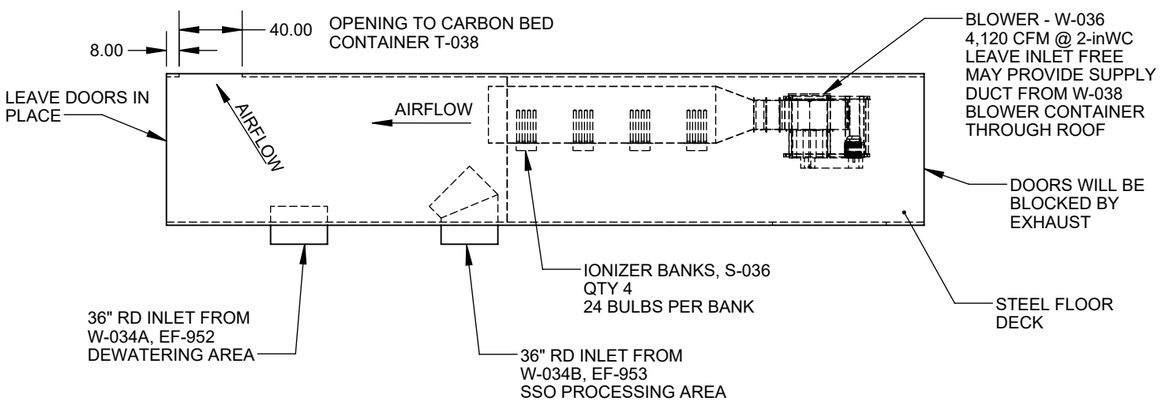

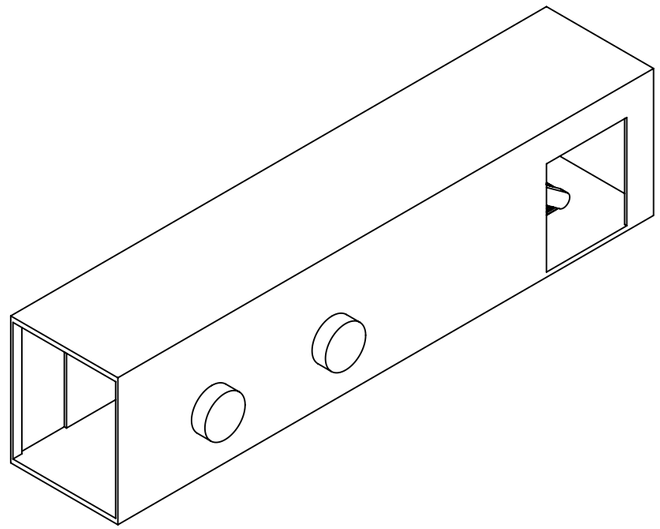

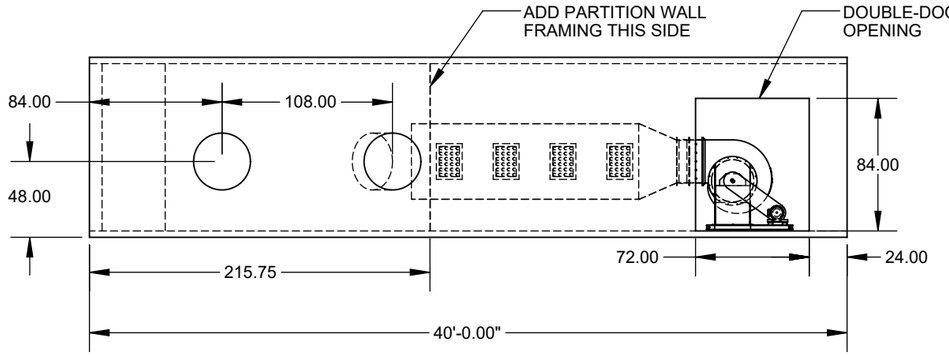

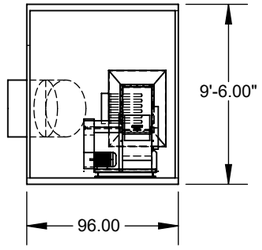

NOTES:
1. MAKE FROM 40' ISO HIGH CUBE CONTAINER
2. EMPTY CONTAINER WEIGHT BEFORE MODIFICATIONS, 10,000 LBS
3. EXPECTED WEIGHT AFTER MOD. <15,000 LBS

ECN	REV.	DESCRIPTION	DATE	APPROVED

REVISIONS

MATERIAL

SURFACE TREATMENT

EQUIPMENT LETTER

EQUIPMENT AREA

WEIGHT

3rd ANGLE PROJECTION

- NOTICE -
The drawing and information contained within this document are the sole property of GAE LLC and may not be copied or transferred without the written consent of GAE LLC. The recipient of this document must use the information provided exclusively for reasons beneficial and in no way detrimental to GAE LLC. The receiver shall return this document after the completion of its use or upon request, either written or verbal. Any violation of these terms may result in legal action submitted in a court of law. All rights reserved.

	DATE	NAME
DESIGNED	10/18/21	NMAST
CHECKED		

SCALE 1:96

SHEET # 1 of 1

GREEN ARROW ENGINEERING
2759 Long Road Wooster, OH 44691

UNLESS OTHERWISE SPECIFIED
DIMENSIONS ARE IN INCHES
TOL. ON ANGLES ±1°
TOL. ON 1 PLACE DECIMALS ±0.25

DIMENSIONING & TOLERANCING IN ACCORDANCE WITH ASME Y14.5M-1994

CUSTOMER NAME

PROJECT NO.

TITLE
MECHANICAL CONTAINER IONIZATION REACTOR

FORMAT B

DRAWING NO. 21-400

T-038 Carbon Filter Container

High-cube ISO shipping container, 40-ft std. length. Modified to use as a vertical deep bed carbon filter to control odors from the building exhaust air

REVISION LEVEL	DATE	DESCRIPTION	BY
0	10/17/21	INITIAL RELEASE	NMAST

Section 1 - Basic Container Information		
1.0	Tag No.	T-038
1.1	Dimensions	9’-6” high x 8’-0” outside. 8’-10” x 7’-8” inside. 40’ long.
1.2	Construction Materials	Steel ISO container. Paint with industrial epoxy. Interior carbon cells from 304SS.
1.3	Foundation	By Others, Provide Loading
1.4	PE Stamp	State of Illinois for foundation. Container is not occupied.
1.5	Site Std. Conditions	See separate “Site Conditions for Green Era” specification document
1.6	Weight	23,747 lbs empty. 55,747 lbs with carbon
1.7	Electrical Connections	None
1.8	Insulation	Exterior container walls should be insulated to prevent condensation during winter operation. R10 or more. Dow board is acceptable or closed-cell spray foam.

Section 2 – Fluid Properties – channeled through plenums and through carbon								
2.0	Fluid Desc.	Odorous air from building, 38,000 CFM						
2.1	TS%	N/A	2.2	pH range	N/A	2.3	Temp. range	55 - 100° F
2.4	S.G.	1	2.5	Viscosity	0.0187 cP	2.6	Phase	Gas
2.7	Flammable		No					
2.8	Abrasives	Dust and moisture will be present.						
2.9	Corrosives	H2S < 5 PPMV, NH4 < 10 PPMV, water vapor						
2.10	Notes	Combines with flow from ionization blower W-036 @ 4120 CFM						

Section 3 – Activated Carbon								
3.0	Type	Pelletized (extruded) carbon, 4mm size, optimized properties for sewage odor control. High H2S and VOC loading capacity.						
3.1	Hardness	95+	3.2	Density	26-30 lbs/CF	3.3	H2S cap.	0.3 g/cc min
3.4	Pressure loss	From 1.25 inWC/ft. of bed for 80 FPM airflow rate, loose pack						
3.5	Products	Calgon: Minotaur OC, Evoqua Midas OCM						
3.6	Corrosives	H2S < 5 PPMV, NH4 < 10 PPMV, water vapor						
3.7	Notes	May substitute for engineer approved equal.						

MINOTAUR™ OC

High Capacity Activated Carbon for Odor Control

CALGON CARBON CORPORATION

Description

MINOTAUR™ OC is a patented high capacity pelletized activated carbon that has been developed specifically for odor removal from sewage treatment operations. This product provides very high adsorption capacity for H_2S and adsorbs volatile organic compounds (VOCs) far more effectively than other high H_2S capacity media.

MINOTAUR™ OC is a single cycle product that is disposed after its virgin capacity is spent. MINOTAUR™ OC is capable of being safely disposed of in municipal landfills or via incineration.

Applications

MINOTAUR™ OC is designed for high capacity single use odor removal applications in sewage treatment. The product is ideal for use at pump stations and treatment plants where both H_2S and organic odors are a problem. MINOTAUR™ OC has been designed as a complement to Calgon Carbon Corporation's catalytic CENTAUR® HSV, which achieves the maximum H_2S capacity on activated carbon though multi-cycle use and in situ water regeneration. MINOTAUR™ OC is the high H_2S capacity alternative to CENTAUR® HSV when potable water is not available for water wash/regeneration.

Regeneration

MINOTAUR™ OC is a one-use carbon and is not regenerated in place. For applications where potable water is available, Calgon Calgon Carbon Corporation recommends using Centaur® HSV, an activated carbon with the highest H_2S capacity in the industry, achieved through its water regenerability.

Typical Properties

H_2S Capacity	0.3 g H_2S/cc carbon (min)
Hardness Number	95 (min)
Particle Size	
MINOTAUR™ OC_4	4 mm
MINOTAUR™ OC_3	3 mm

The determination of H_2S capacity will be made through the use of ASTM Test Method D-6646.

Pressure Drop in a Deep Bed Odor Control Unit

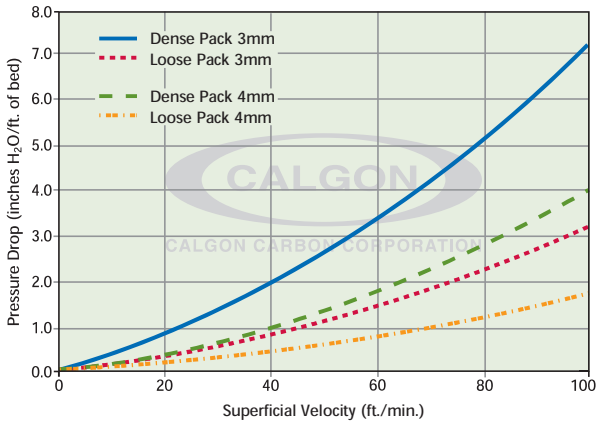

Features / Benefits

Features	Benefits
Not caustic impregnated	Heat excursion potential caused by caustic impregnants is eliminated thus making operations safer. In contrast to caustic impregnated carbons, MINOTAUR™ OC has organic capacity equal to other virgin carbons.
Pelletized product	MINOTAUR™ OC is an extruded carbon pellet of uniform size (3 mm or 4 mm diameter) providing a lower pressure drop than granular products, thereby reducing fan horsepower requirements and energy consumption.

Design Considerations

Condensation of water on the carbon will reduce its performance; therefore, devices to prevent free water condensation are recommended.

MINOTAUR™ OC is ideal for use in a typical packed bed. The bed depths typically range from 12" to 36" depending on the desired total pressure drop and on-stream time. For assistance in the design of a carbon system, please contact your Calgon Carbon Technical Service Representative.

Safety Message

Wet activated carbon preferentially removes oxygen from air. In closed or partially closed containers and vessels, oxygen depletion may reach hazardous levels. If workers are to enter a vessel containing carbon, appropriate sampling and work procedures for potentially low oxygen spaces should be followed, including all applicable Federal and State requirements.

CALGON CARBON CORPORATION

Making Water and Air Safer and Cleaner

Calgon Carbon Corporation
P.O. Box 717
Pittsburgh, PA USA 15230-0717
1-800-422-7266
Tel: 1-412-787-6700
Fx: 1-412-787-6713

Chemviron Carbon
European Operations of
Calgon Carbon Corporation
Zoning Industriel C de Feluy
B-7181 Feluy, Belgium
Tel: + 32 (0) 64 51 18 11
Fx: + 32 (0) 64 54 15 91

Calgon Carbon Asia PTE LTD
9 Temasek Boulevard
#08-01A Suntec Tower Two
Singapore 038989
Tel: + 65 6 221 3500
Fx: + 65 6 221 3554

Your local representative

Copyright© 2007 Calgon Carbon Corporation, all rights reserved.

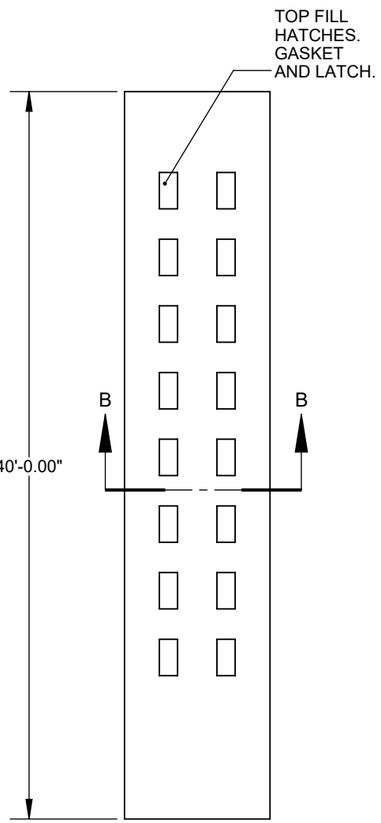

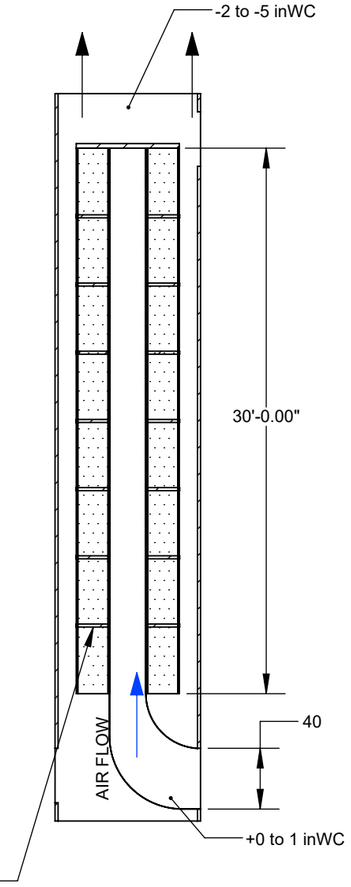

SECTION A-A

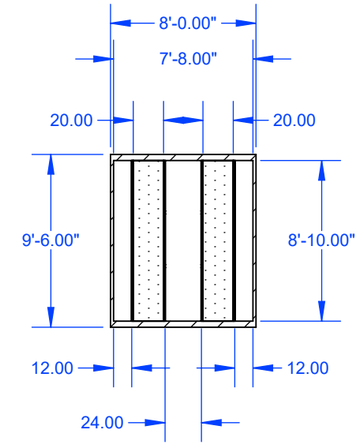

SECTION B-B

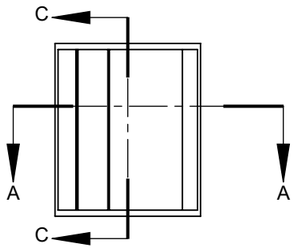

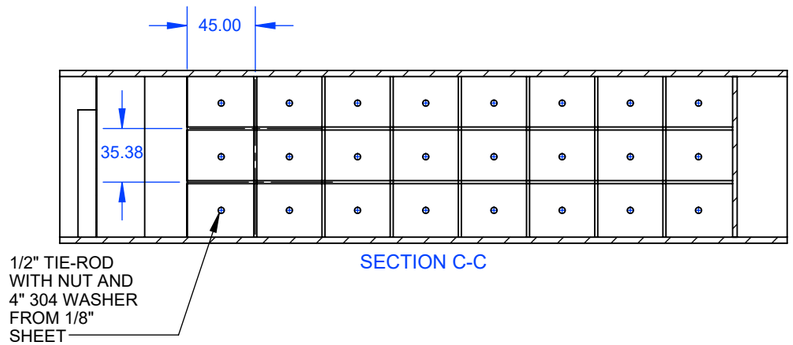

SECTION C-C

Notes:

Container Construction

1. Standard 40-foot long high-cube ISO shipping container will be modified for use as a carbon bed.
2. Container steel should be painted with an industrial epoxy coating. Use Sherwin-Williams Dura-Plate 235 epoxy or engineered approved equal. Follow product data sheets for recommended primer, application procedures, and build thickness.
3. Carbon cells shall be constructed of 304 SS.
4. Use standard perforated sheet pattern, 1/8-in holes on 3/16-in spacing with 40% open area. Brake edges to form panels and reinforce with vertical ribs. Standard face dimensions of 34 x 44.
5. Sidewall loading for high-cubes is the limiting load condition at 93 PSF or 17.9 inWC.
6. Limit internal pressure or vacuum to 9-inWC without additional reinforcement. A weighted vacuum relief should be installed if blower can exceed this pressure rating.
7. Design mandoors and fill hatches for this pressure requirement. Use walk-in cooler door lift-off strap hinges and roller latches.
8. End walls of container will be butted to other containers and drawn together with tie rods through the end tubing. Apply full width 3/8" closed-cell epdm foam with adhesive backing to one of the container end walls and allow to compress when the containers are drawn together.
9. Cell walls adjacent to the container walls are not accessible after assembly.

Activated Carbon

1. Use only 4mm pelletized carbon.
2. Each cell will hold 2 CY of carbon, for a total of 32 CY. Fill from top with supersack and top-off with additional if necessary to the bottom of the port nozzle.
3. Use vac truck to remove spent carbon. Use a cyclone separator on vac line to drop out carbon into bin or bag for disposal.
4. Interior screen panels could be removed if the carbon is caked. Use fan to supply fresh air when working in container, wear a half-mask respirator with appropriate dust filters, use a 4-gas meter to monitor for low O2 levels, and follow all standard work procedures to assure safety. Follow all OSHA rules.

Pressure monitoring

1. Provide indicating pressure monitoring (manometers) at the mandoor. One sensor should read the inlet side of the guard bed and a second dedicated pressure sensor for the discharge side. Sensor pitot tubes should be pointed into the normal airflow direction for static pressure readings.

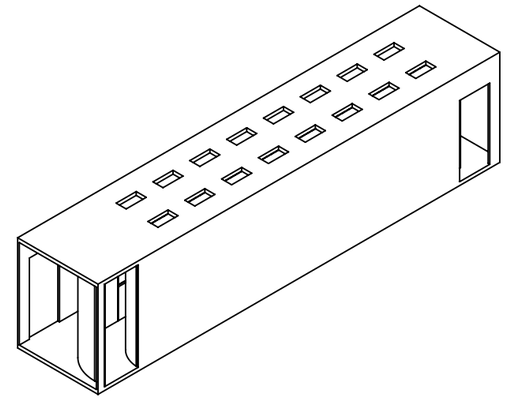

CONTAINER WEIGHT: 8,747 LBS
EST. CONTAINER WEIGHT WITHOUT CARBON: 23,747 LBS
EST. CONTAINER WEIGHT WITH CARBON: 55,747 LBS
MAX GROSS ALLOWABLE (FOR REF) 67,200 LBS

ECN	REV.	DESCRIPTION	DATE	APPROVED

REVISIONS

MATERIAL

SURFACE TREATMENT

EQUIPMENT LETTER

EQUIPMENT AREA

WEIGHT

3rd ANGLE PROJECTION

- NOTICE -
The drawing and information contained within this document are the sole property of GAE LLC and may not be copied or transferred without the written consent of GAE LLC. The recipient of this document must use the information provided exclusively for reasons beneficial and in no way detrimental to GAE LLC. The receiver shall return this document after the completion of its use or upon request, either written or verbal. Any violation of these terms may result in legal action submitted in a court of law. All rights reserved.

	DATE	NAME
DESIGNED	10/14/21	NMAST
CHECKED		

SCALE 1:100 | SHEET # 1 of 1

GREEN ARROW ENGINEERING
2759 Long Road Wooster, OH 44691

UNLESS OTHERWISE SPECIFIED
DIMENSIONS ARE IN INCHES
TOL. ON ANGLES ±1°
TOL. ON 1 PLACE DECIMALS ±0.25

DIMENSIONING & TOLERANCING IN ACCORDANCE WITH ASME Y14.5M-1994

CUSTOMER NAME

PROJECT NO.

TITLE

CARBON BED

FORMAT B

DRAWING NO. 21-350

MUA-950 W-030A/B, E-030A
MUA-951 W-030C/D, E-030B
Building make-up air units

18,000 CFM @ 1.5 inWC to 30,000 CFM @ 2.5 inWC

Variable Speed blower

Direct fire gas burner to 2.4 MMBTU/h input

REVISION LEVEL	DATE	DESCRIPTION	BY
0	10/17/21	INITIAL RELEASE	NMAST

Section 1 - Basic Equip. Data		
1.0	Tag No.	MUA-950: W-030A/B & E-030A; MUA-951: W-030C/D & E-030B
1.1	Pulls from	Outdoor air
1.2	Blows to	Process building, east wall, MUA-950 south half, MUA-951 north half
1.3	Installation	Outdoors
1.4	Burner	Direct fire gas heater. Burner capacity to 2.4 MMBTU/h

Section 2 – Fluid Properties – inlet prior to filter and burner								
2.0	Fluid Desc.	Fresh outdoor air						
2.1	TS%	N/A	2.2	RH range	50-100%	2.3	Temp. range	10 - 100° F
2.4	S.G.	1	2.5	Viscosity	0.0187 cP	2.6	Phase	Gas
2.7	Flammable		No					
2.8	Abrasives	Moisture may be present.						
2.9	Corrosives	none						
2.10	Notes	Include inlet air filter for dust						

Section 3 – System Requirements		
3.0	Flow Range	30,000 CFM @ 2.5 inWC, VFD control, each MUA
3.1	Duty	Continuous
3.2	Suction Conditions	Ducted
3.3	Static Pressure Range	(-) 1.0 inWC at suction inlet
3.4	Static Discharge P	1.5 inWC max (external)
3.6	Dynamic Losses from Inline Equipment	flow to unit through suction vents and 36-inch duct header. No inline filtration.
3.7	Dynamic Losses Duct and Fittings	Included in 3.6.
3.8	Expected max system pressure at req. flow	2.5 inWC
3.9	Detailed Head Loss Calculation Completed?	Yes.
3.10	Gas pressure requirement	0.5 – 5 PSIG
3.11	Temp. rise °F (EAT -2°F, LAT 66.5°F)	68F
3.12	Burner control panel	Remote panel, wall mounted inside bldg.

Section 4 - Air Handler and Blower Data					
4.0	Type	Plenum	4.1	Impeller Dia.	27-inch
4.2	Mfg.	Greenheck	4.3	Model No.	P227-H38-II
4.4	Drive	Direct drive			
4.5	Sheave Ratio	N/A	4.6	RPM @ 60 Hz	1770
4.7	Flow @ 60 Hz	30,000 CFM air @ 2.5 inWC			
4.8	Suction Flange	N/A	4.9	Discharge Flange	N/A

4.10	Total Weight	3868 lbs	4.11	base dim	See curb dwg. 148 x 92
4.12	Height	64”			
4.13	Notes:	Supplied and installed as part of the base building contract.			

Section 5 - Motor Data, each fan motor					
5.0	Motor HP	20	5.1	Frame	256T
5.2	RPM	1770	5.3	Voltage	3-ph 460 / FLA 40
5.4	SF	1.15	5.5	Duty	Continuous
5.6	Eff.	IE4	5.7	X-proof	Not required / installed outdoors
5.8	Encl.	ODP	5.9	Mfg.	Baldor is preferred

Section 6 – Flow Range				
CFM	**SP (inWC)**	**RPM**	**Hz**	**BHP**
18,000	1.5	1125	38	<20 HP
30,000	2.5	1732	60	<20 HP
Notes	Operators may choose to operate both at reduced flow volume at 18,000 CFM or only operate a single unit at 30,000 CFM. The make-up air needs to balance with the exhaust fans to maintain a negative building static pressure between -0.08 and -0.1 inWC. Openings OH doors when traffic is entering or exiting the building will affect the pressure. PID proportional gains should be set low if using direct pressure control to avoid fast ramp-up and ramp-down in response to static pressure changes.			

MUA-950 and MUA-951
each unit has twin 20 HP plenum blowers, VFD speed controlled
Direct fired gas heater, 2.4 MMBTU/h input.
Planned operation point when running together 18,000 CFM @ 1.5 inWC.
Independent operation to 30,000 CFM @ 2.5 inWC.
Primary control: building static pressure

Printed Date: 10/19/2021
Job: Green Era
Mark: MUA-950_951
Model: DGX-P227-H38-II

DGX-P227-H38-II

Unit Performance

Design Conditions

Elevation (ft)	Summer		Winter (°F)	Supply (CFM)	Outdoor Air (CFM)	Min Supply Airflow (CFM)
	DB (°F)	WB (°F)				
617	92.1	78.0	-1.6	30,000	30,000	10,500

Unit Specifications

Qty	Weight (lb)	Cooling Type	Heating Type	Unit Installation	Unit ETL Listing
2	3,868 (+/- 5%)	None	Direct Gas-Fired	Outdoor/Indoor	ANSI Z83.4 / CSA 3.7

Configuration

Unit Orientation	Unit Configuration	Outdoor Air Intake	Return Air Intake	Supply Air Discharge
Horizontal	Variable Volume	End	-	End

Heating Specifications

Type	Gas Type	Gas Pressure		Capacity (MBH)		Temperature Rise (°F)	Performance	
		Min (in. wg)	Max (Psi)	Input	Output		EAT (°F)	LAT (°F)
Direct Gas	Natural	14	5	2,400.0	2,208.0	68.2	-2.0	66.5

Air Performance

Type	Total Volume (CFM)	External SP (in. wg)	Total SP (in. wg)	RPM	Operating Power (hp)	Fan			
						Qty	Type	Size (in.)	Drive-Type
Supply	30,000	1.5	2.55	1732	13.62	2	Plenum	27	Direct-Drive

Motor Specifications

Motor	Qty	Size (HP)	Enclosure	Efficiency	RPM
Supply Fan Motor	2	20	ODP	NEMA Premium	1770

Electrical Specifications

Power Supply	Rating (V/C/P)	MCA (A)	MOP (A)
Unit	460/60/3	68.4	80

CONSTRUCTION FEATURES AND ACCESSORIES

Unit	
Unit Installation - Indoor or Outdoor	Std
Unit Construction - Double Wall	X
Wall Insulation - 1in. fiberglass - Entire unit	X
Base Insulation - 1in. fiberglass - entire unit base pan	Std
Paneled Bottom - Sheet metal liner for base insulation	
Corrosion Resistant Fasteners	Std
Access and Connections - Right side when facing intake	X
Service Access - Hinged access doors	X
Unit Finish - G90 Galvanized	X
Finish Color	
Supply Fan - Direct-drive, backward-curved plenum	X
Supply Fan and Motor Vibration isolation - Neoprene	X
Controls	
Unit Controls - Terminal strip	X
Remote Panel	
BMS Communication	
BMS Protocol	
Temperature Control - Discharge control	X
Supply Fan VFD - VFD by factory	X
Supply Fan Control - External 0-10 VDC signal	X
Unoccupied Mode (Night Setback)	
Control Accessories	
Remote display	
Heating Inlet Air Sensor	X
Cooling Inlet Air Sensor	
Dirty Filter Switch	X
Fire Stat Type III (Ships loose)	
120V/24V Smoke Detector (Ships loose)	
Inlet Damper End Switch	X
External Cooling Lockout Relay	
Freeze Protection (Supply Air Low Limit)	X
Auxiliary Supply Starter Contacts	
Auxiliary Exhaust Starter Contacts	
Airflow Proving Monitoring Contact	X

Accessories	
Factory Installed, Lockable, NEMA 3R Disconnect	Std
Weatherhood - Birdscreen	X
Supply Air Filters - 2" MERV 8, 16x25x2 - (30)	X
Outdoor Air Inlet Damper - Low leakage	X
Supply Air Outlet Damper	
Return Air Damper	
Diffuser	
Roof Curb	
Combination Curb	
Electrofin Coil Coating	
Fan Bearing Extended Lube Lines	
Inlet Damper Module	
Spare Belts	
Spare Filters	
Motor with Shaft Grounding	
Service Outlet	
Service Lights	
Gas Heating Accessories	
Pilot Ignition	Std
Flame Sensing - Flame rod	X
Flame Safeguard Display	
Agency Approval - ETL	Std
FM Compliant	X
High Gas Pressure Switch	X
Low Gas Pressure Switch	
Visual Indication Valves	
Proof of Closure Valve	
External Gas Pressure Regulator (Ships loose)	
Carbon Dioxide Sensor (Ships loose)	
Warranty Options	
Unit Warranty - 1 Year	X
5 Year Compressor Warranty	
5 Year Burner Warranty	
10 Year Burner Warranty	

Standard Option	Std
Not Included	
Included	X

Notes
Damper(s) supplied are low leakage, motorized VCD-23 (leakage rate of 3 CFM/ft^2 @ 1 in.wg), Class 1A

Fan Charts And Performance

Supply Fan Performance									
Total Volume (CFM)	External SP (in. wg)	Total SP (in. wg)	RPM	Operating Power (hp)	Motor		Fan		
					Qty	Size (HP)	Qty	Type	Drive-Type
30,000	1.5	2.55	1732	13.62	2	20	2	Plenum	Direct

Pressure Drop (in. wg)						
Weatherhood	Filter	Damper	Cooling	Heating	External	Total
0.103	0.179	0.143	-	0.625	1.5	2.55

Sound Performance in Accordance with AMCA										
Sound Power by Octave Band								Lwa	dBA	Sones
62.5	125	250	500	1000	2000	4000	8000			
91	94	100	104	100	94	88	84	105	94	70

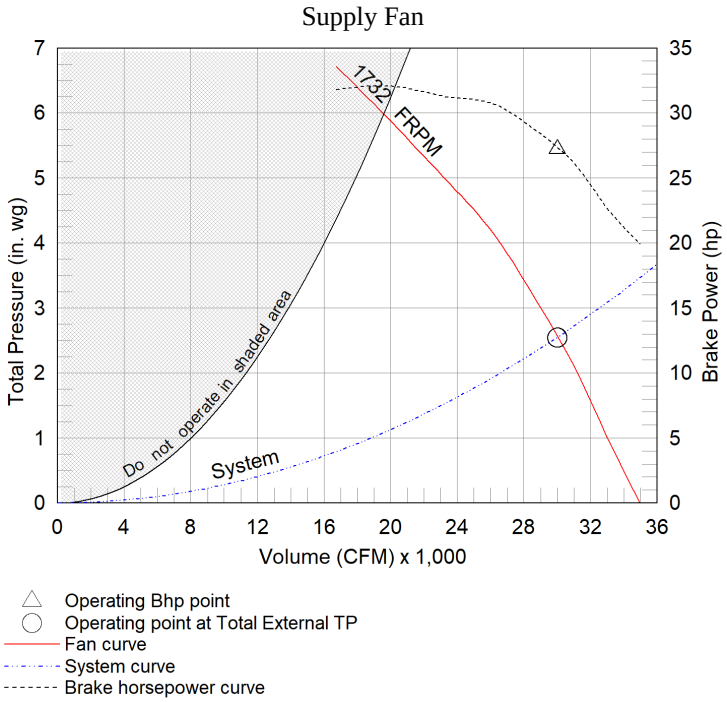

Heating Specifications

Heating Performance								
Type	Gas Type	Gas Pressure		Capacity (MBH)		Temperature Rise (°F)	Performance	
		Min (in. wg)	Max (Psi)	Input	Output		EAT (°F)	LAT (°F)
Direct Gas	Natural	14	5	2,400.0	2,208.0	68.2	-2.0	66.5

Gas Train Details							
Redundant Main Valves	Electronic Modulating Valve	Pilot Valve	Internal Regulator	Visual Indication Valve	Proof of Closure Valve	Gas Pressure Switch(es)	External Regulator
Std	Std	Std	Std	-	-	High	-

Additional Heating Information						
ETL Approved	FM Compliant	Temperature Control	Flame Sensing	Ignition Control	CO2 Sensor	Flame Safeguard Display
Std	Yes	Discharge	Flame Rod	Pilot	-	-

Unit Details
92% thermal efficiency
Cast aluminum burner manifold with stainless steel mixing plates
Electronic modulation burner control

10 second pre-purge sequence
Low fire start

Gas Connections

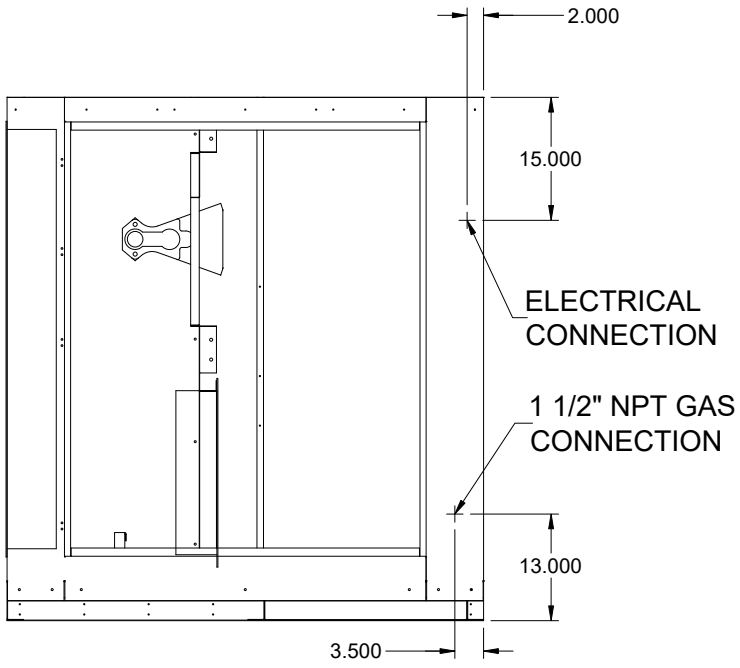

ELEVATION VIEW

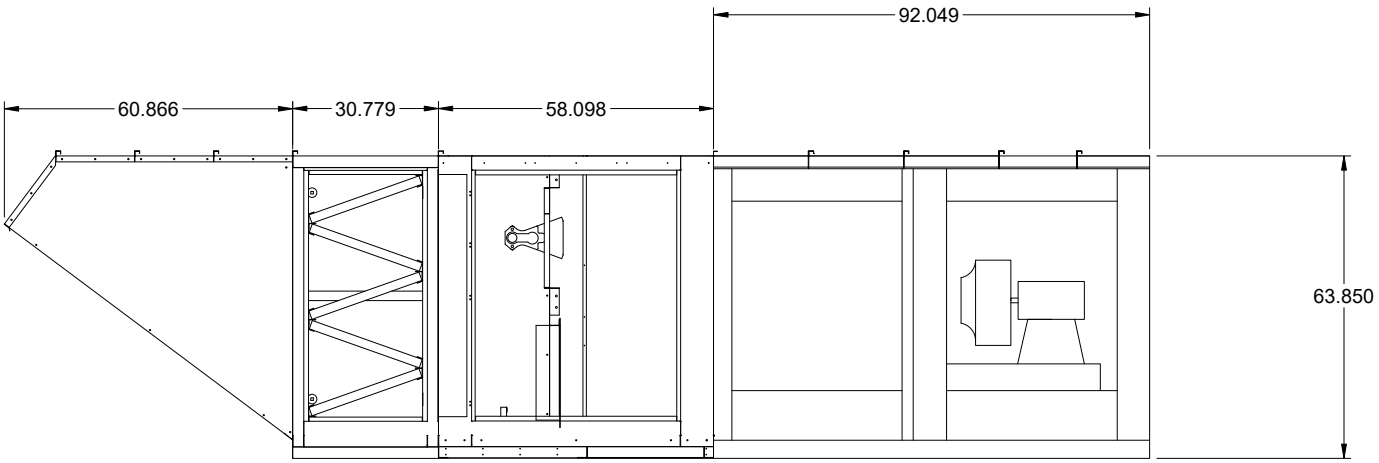

Notes - Elevation View
Standard configuration for unit access is on the right-hand side, when looking into the unit intake in the direction of airflow.
Order of unit sections is from intake of unit to discharge of unit.
Sections included on this unit: Weatherhood Section, Filter Section, Heating Section, Blower Section
Insulation: Double Wall, Entire Unit Insulated.

PLAN VIEW

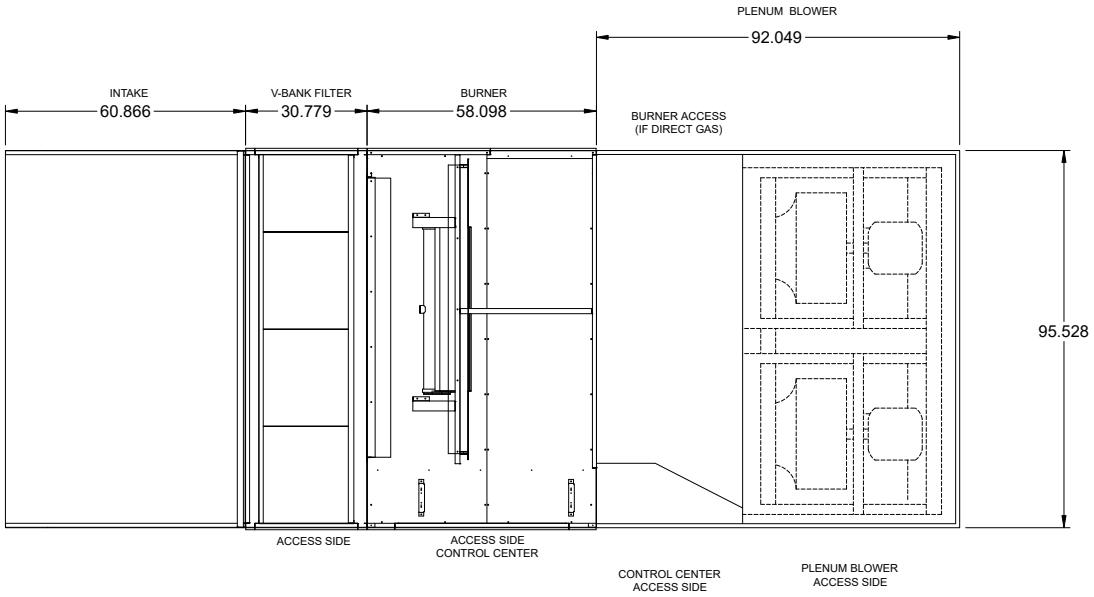

Notes - Plan View
Standard configuration for unit access is on the right-hand side, when looking into the unit intake in the direction of airflow.

END VIEW

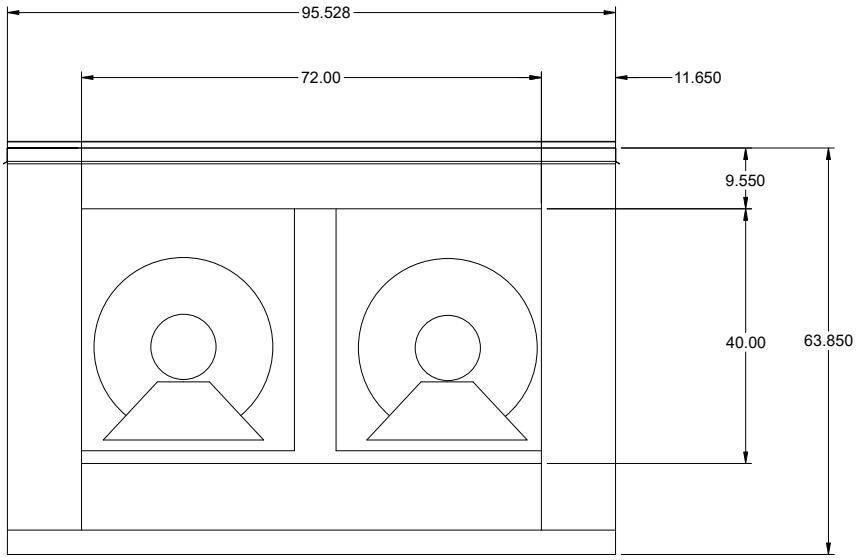

FOOTPRINT VIEW

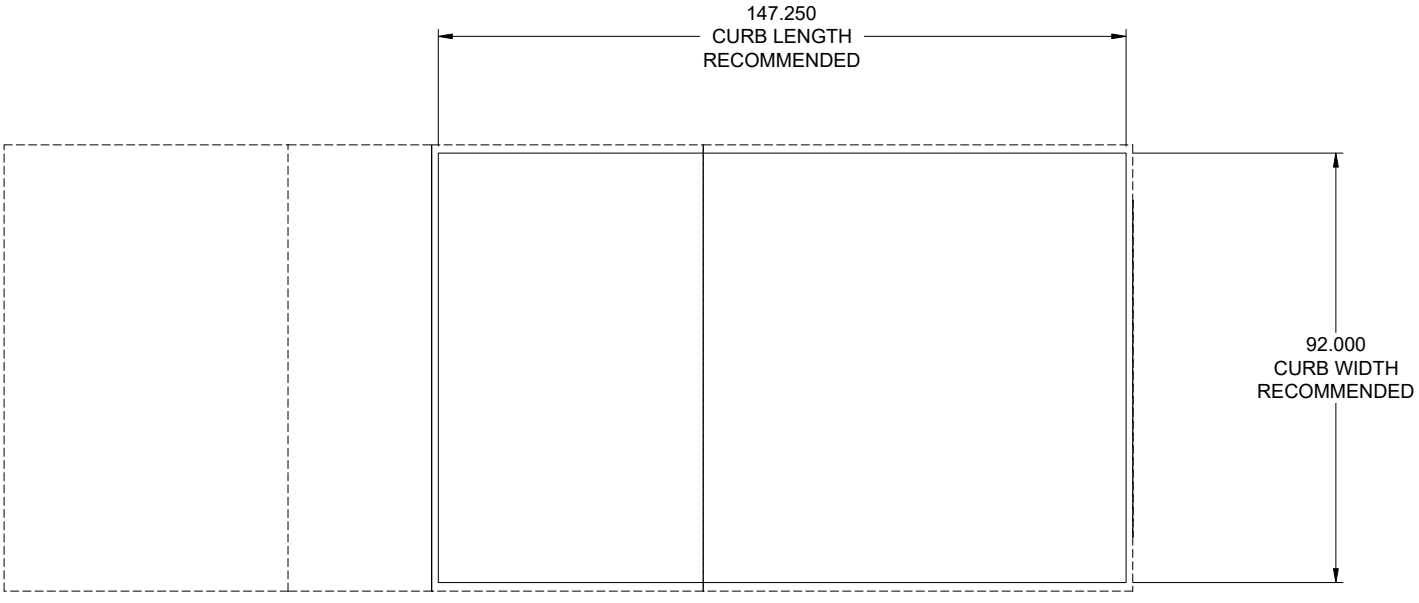

Notes - Footprint View
Minimum Roof Opening: The minimum roof opening size is the illustrated duct diameter plus 0.25 in. on all sides. For example: If the duct size is 14 x 14 in. square, the minimum roof opening size is 14.5 x 14.5 in. square.
Maximum Roof Opening: There must be a minimum perimeter of 1.75 in. between the roof opening and the roof curb. For example: If the roof curb is 75 x 30 in. square, the maximum roof opening is 71.5 x 26.5 in. inches square.
The weatherhood and filter sections of the make-up air unit extend beyond the curb. This is by design, to prevent water infiltration.

Clearance Specifications

Recommended Minimum Combustible Clearances				
	Floor (in.)	**Top (in.)**	**Sides (in.)**	**Ends (in.)**
Insulated Units	0	0	0	0
Non-Insulated Units	0	6	6	6

Notes - Combustible Clearances
Clearance to combustibles is defined as the minimum distance required between the heating source and the adjacent combustible surfaces to ensure the adjacent surface's temperature does not exceed 90 F above the ambient temperature.

Recommended Minimum Service Clearances	
Housing 32 and less (in.)	**Housing 35 and higher (in.)**
42 on the controls side of the unit	48 on the controls side of the unit

Notes - Service Clearances
To ensure ample space for component removal (evaporative cooling media, coils, filters, etc.), service clearances should be 6 in. wider than the width of the module itself.

Wiring Diagram

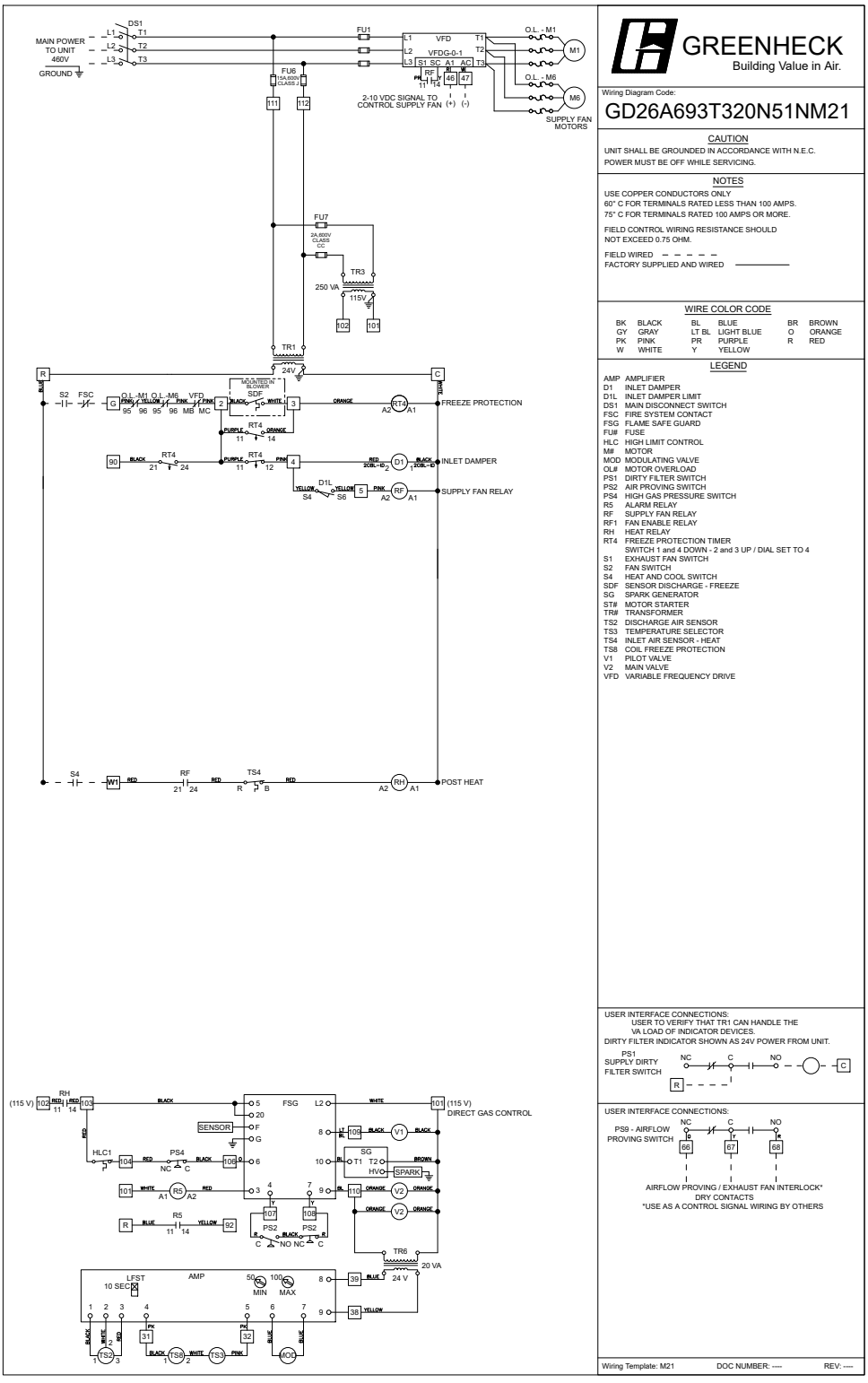

Manufacturer reserves the right to change, modify, or improve this product at anytime

Corner Weights

899 lb 917 lb

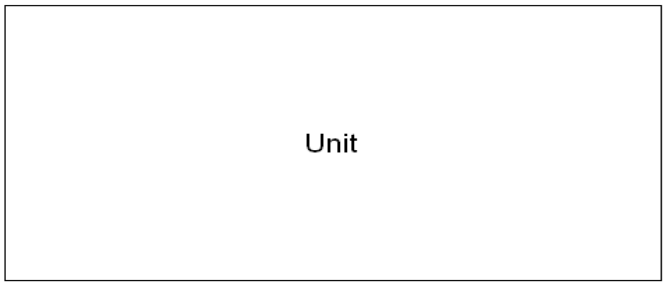

1,016 lb 1,036 lb

SEQUENCE OF OPERATIONS

Unit Controls
The unit shall be provided from the factory with:

- 24VAC Transformer
- Terminal Strip
- Supply fan VFD controlling dual supply fan motors and individual motor overloads
- Factory mounted and wired outdoor air inlet damper with actuator

Field Provided Control Requirements
The following field provided control signals must be provided for proper operation of the unit (Reference the unit wiring diagram for additional information):

- Supply fan enable – Contact closure between R and G (24VAC)
- Supply fan VFD speed signal – 0-10 VDC

Unit Start-Up Sequence

- Supply Fan Enable Is Received
- Outdoor air inlet damper actuator is energized
- Outdoor air inlet damper actuator limit switch is proven closed
- Supply Fan Is Enabled

Supply Fan Sequence
The unit has been provided with a factory mounted variable frequency drive (VFD). The variable frequency drive shall control the supply fan speed as indicated by the following sequence:

External 0-10 VDC Signal By Others:
The supply fan speed is modulated by an external 0-10 VDC signal (field provided and wired) landed to terminals in the unit control center (see unit wiring diagram for details).

Heating Control
A heating enable signal must be present and the supply fan must enabled before the unit will enable heating.

Heating Inlet Air Sensor (Heating Lockout)
The heating will be locked out when the outside air temperature is above the heating inlet air sensor set point (typical 65 F, adj.)

Direct Gas Fired Heating (Discharge Control)
The gas control amplifier located in the unit shall modulate the heating to maintain a supply temperature set point (55 F-90 F, adj.).

- The set point is adjusted in the unit control center.

Building Freeze Protection
If the supply air temperature drops below 35 F for 300s (adj.), the supply fan will be disabled. Cycling the fan enable will reset the timer. This sequence is intended to prevent the unit from supply cold air into the building.

Warranty Statement for Make-Up Air

Unit Warranty

Greenheck warrants the equipment to be free from defects in material and workmanship for a period of 1 year (standard) from the shipment date.

DG Burner Extended Warranty

The warranty does not include items deemed as consumable components, including, but not limited to: Igniters, Spark rods, Spark generator, Flame rods,Flame wires, UV eye components, and associated components.

Note: Rust, discoloration of the burner material and cracks or holes smaller than .75 in. is not qualification for a defective burner.

Warranty Notes

Any component which proves defective during the warranty period will be repaired or replaced at Greenheck's sole option when returned to our factory, transportation prepaid. All warranties do not include labor costs associated with troubleshooting, removal, or installation. Greenheck will not be liable for any consequential, punitive, or incidental damages resulting from use, repair, or operation of any Greenheck product. These warranties are exclusive and are in lieu of all other warranties, whether written, oral, or implied, including the warranty of merchantability and the warranty of fitness for a particular purpose. No person (including any agent or salesperson) has authority to expand Seller's obligation beyond the terms of this warranty, or to state that the performance of the product is other than that published by Seller.

As a result of our commitment to continuous improvement, Greenheck reserves the right to change specifications without notice.

DGX-P227-H38-II

Chart Type: RPMFamily

Fan:

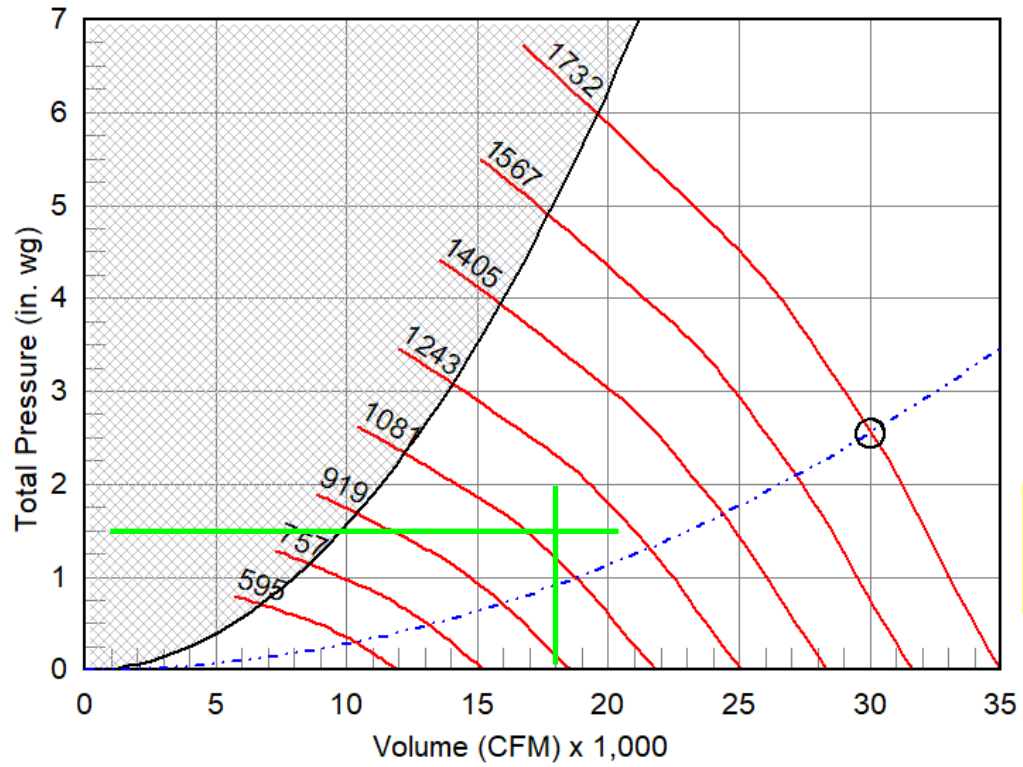

Operating speed for 18,000 CFM @ 1.5 inWC is about 1125 RPM

△ Operating Bhp point

○ Operating point at Total External TP

Fan curve

System curve

Brake horsepower curve

W-032 Ionization Circulation Fan

4,000 CFM @ 1.0 inWC with 1.5 HP motor

Tube axial, ceiling hung

REVISION LEVEL	DATE	DESCRIPTION	BY
0	10/17/21	INITIAL RELEASE	NMAST

Section 1 - Basic Equip. Data		
1.0	Tag No.	W-032A, W-032B
1.1	Pulls from	Indoor air
1.2	Blows to	Through MERV 8, 2-in pleated filter, to ionization duct
1.3	Installation	Suspend from overhead

Section 2 – Fluid Properties								
2.0	Fluid Desc.	Indoor odorous air, circulation unit						
2.1	TS%	N/A	2.2	RH range	50-80%	2.3	Temp. range	55 - 100° F
2.4	S.G.	1	2.5	Viscosity	0.0187 cP	2.6	Phase	Gas
2.7	Flammable		No					
2.8	Abrasives	Moisture may be present.						
2.9	Corrosives	None						
2.10	Notes							

Section 3 – System Requirements		
3.0	Flow Range	4,000 CFM @ 1 inWC
3.1	Duty	Continuous
3.2	Suction Conditions	Short ducted approach
3.3	Static Pressure Range	(-) 0 to (-) 0.1 inWC at suction inlet
3.4	Static Discharge P	0.9 inWC max
3.6	Dynamic Losses from Inline Equipment	Filter, MERV-8, 2-in pleat, expecting 0.25 inWC new to 1 inWC at changeout. Blower will produce 4800 CFM @ 0.25 inWC. Filter area 4’ x 3’. Use two 24” filters and two 24x12” filters in housing.
3.7	Dynamic Losses Duct and Fittings	Included in 3.6.
3.8	Expected max system pressure at req. flow	1.0 inWC
3.9	Detailed Head Loss Calculation Completed?	Yes

Section 4 - Blower Data					
4.0	Type	Vane axial direct drive	4.1	Impeller Dia.	24 inch nom.
4.2	Mfg.	Greenheck	4.3	Model No.	VAD-24H14-19-B15
4.4	Drive	Direct			
4.5	Sheave Ratio	N/A	4.6	RPM @ 60 Hz	1200 (1170)
4.7	Flow @ 60 Hz	4,000 CFM air @ 1.0 inWC			
4.8	Suction	24 in RD. duct	4.9	Discharge Flange	25.75” BC
4.10	Weight	367 lbs	4.11	Housing	32 lg x 24
4.12	Flange OD	27.75			
4.9	Notes:				

Section 5 - Motor Data					
5.0	Motor HP	1.5	5.1	Frame	182T
5.2	RPM	1200	5.3	Voltage	3-ph 460
5.4	SF	1.15	5.5	Duty	Continuous
5.6	Eff.	IE4	5.7	X-proof	Not required
5.8	Encl.	TEAO	5.9	Mfg.	Baldor is preferred

Section 6 – Flow Range				
CFM	**SP**	**RPM**	**Hz**	**BHP**
4,800	0.25 inWC	1170	60	<1 HP
4,000	1.0 inWC	1170	60	<1 HP
Notes	SP range from new filter to fouled filter			

Section 7 – Accessories				
line	**Description**	**P/N**	**Qty**	
10	Ionizer banks, 5-bulb units	KHF5-PE5	2	
20	Filter Area, 36x48, MERV 8, 2-in	24 x 24	2	
30	Filter Area, 36x48, MERV 8, 2-in	24 x 12	2	
Notes	Filter box access door should be installed in accessible location from a manlift.			

Basic Arrangement, inlet duct optional

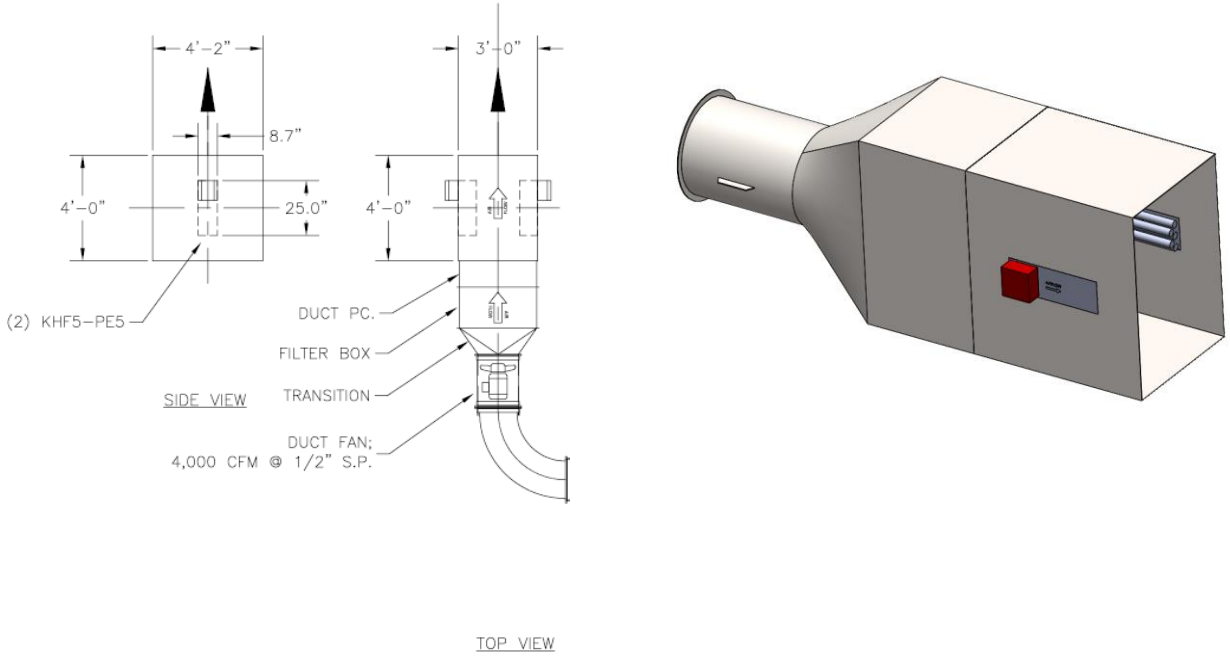

Performance	
Quantity	1
Volume (CFM)	4,018
Total External SP (in. wg)	1.009
Total TP (in. wg)	1.103
Operating Power (hp)	0.99
Required Power (hp)	0.99
Fan RPM	1170
Elevation (ft)	617
Start-up Temp.(F)	70
Operating Temp.(F)	70

Fan Configuration	
Size	24
Arrangement	4
Discharge Position	Horizontal
Mounting	Ceiling Hung
Material Type	Steel
Impeller Material	Aluminum

Equipment Weights	
Fan (LMD)(lb)	250
Motor/Drive (lb)	112
Accessories (lb)	5

Misc Fan Data	
FEG	75
Outlet Velocity (ft/min)	1,240
Static Efficiency (%)	64
Tip Speed (ft/min)	7,440
Thrust Weight (%)	5.1
Thrust Force (lb)	19

Motor and Drives	
Motor	Included
Size (hp)	1 1/2
RPM	1170
Enclosure	TEAO
V/C/P	460/60/3
Frame Size	182T
Max Frame Size	286

Model: VAD-24F17-24-B15
Vane Axial Direct Drive

Operating Performance

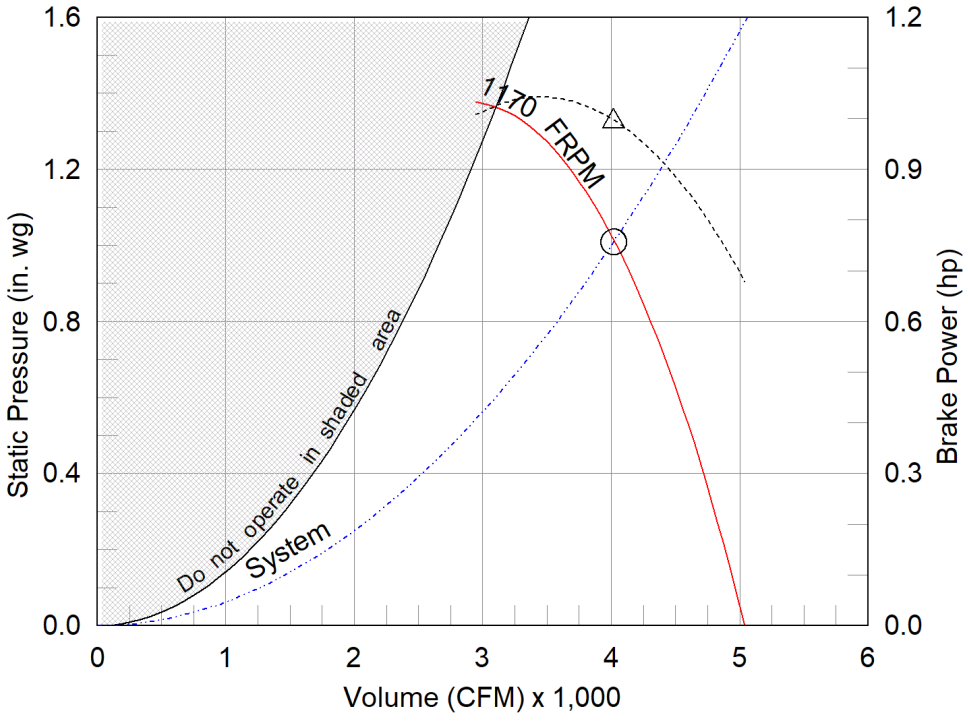

△ Operating Bhp point
◯ Operating point at Total External SP
Fan curve
System curve
Brake horsepower curve

Static Pressure Calculations	
External SP	1 in. wg
Direct Drive RPM Static Adj	0.009 in. wg
Total External SP	1.009 in. wg

Sound Power by Octave Band

Sound Data	62.5	125	250	500	1000	2000	4000	8000	LwA	dBA
Inlet	75	78	82	81	77	72	68	65	82	71

LwA - A weighted sound power level, based on ANSI S1.4
dBA - A weighted sound pressure level, based on 11.5 dB attenuation per octave band at 5 ft- dBA levels are not licensed by AMCA International

Model: VAD-24F17-24-B15

Vane Axial Direct Drive

Standard Construction Features:

HOUSING: Continuously welded steel housing - Welded steel straightening vanes - Inlet and outlet flanges with mounting holes - Electrical leads to external mounted junction box - Structural parts are phosphatized and coated with Permatector.

WHEEL: Aircraft quality, heat treated A356-T6 cast aluminum rotor hub and blades - Manually adjustable blade pitch.

Selected Options & Accessories:

NEMA Premium Efficient Motor - meets NEMA Table 12-12
Motor with Class F or Greater Insulation
Extended Motor Leads
Coating - Permatector, Concrete Gray-RAL 7023, Fan and Attached Accessories
Mounting Brackets - Ceiling Hung
UL/cUL-705 - "Power Ventilators"
Housing is sealed for outdoor use
Unit Warranty: 1 Yr (Standard)

Model: VAD-24F17-24-B15 Vane Axial Direct Drive

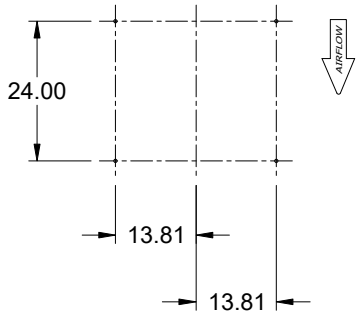

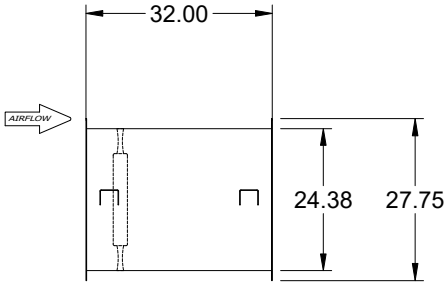

SIDE VIEW

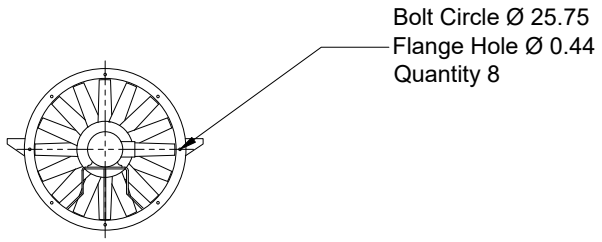

END VIEW

0.56 DIA. MOUNTING HOLES
END VIEW SHOWS FROM OUTLET END OF UNIT
UNIT IS NOT FIELD ROTATABLE

Notes: All dimensions shown are in units of in.

AMCA

AMCA Licensed for Air Performance. Power rating (BHP/kW) does not include transmission losses.

Greenheck Fan Corporation certifies that the model shown herein is licensed to bear the AMCA Seal. The ratings shown are based on tests and procedures performed in accordance with AMCA Publication 211 and comply with the requirements of the AMCA Certified Ratings Program. Performance certified is for installation type D - ducted inlet, ducted outlet. Performance ratings do not include the effects of appurtenances (accessories) in the airstream. Power ratings (BHP/kW) do not include transmission losses.

W-032 Ionization Circulation Twin Fan Unit

8,000 CFM @ 1.0 inWC

Tube axial, ceiling hung

REVISION LEVEL	DATE	DESCRIPTION	BY
0	10/17/21	INITIAL RELEASE	NMAST

Section 1 - Basic Equip. Data		
1.0	Tag No.	W-032C/D, W-032E/F
1.1	Pulls from	Indoor air
1.2	Blows to	Through MERV 8, 2-in pleated filter, to ionization duct
1.3	Installation	Suspend from overhead

Section 2 – Fluid Properties								
2.0	Fluid Desc.	Indoor odorous air, circulation unit						
2.1	TS%	N/A	2.2	RH range	50-80%	2.3	Temp. range	55 - 100° F
2.4	S.G.	1	2.5	Viscosity	0.0187 cP	2.6	Phase	Gas
2.7	Flammable		No					
2.8	Abrasives	Moisture may be present.						
2.9	Corrosives	None						
2.10	Notes							

Section 3 – System Requirements		
3.0	Flow Range	4,000 CFM @ 1 inWC per fan - 8,000 CFM total
3.1	Duty	Continuous
3.2	Suction Conditions	Short ducted approach
3.3	Static Pressure Range	(-) 0 to (-) 0.1 inWC at suction inlet
3.4	Static Discharge P	0.9 inWC max
3.6	Dynamic Losses from Inline Equipment	Filter, MERV-8, 2-in pleat, expecting 0.25 inWC new to 1 inWC at changeout. Blower will produce 4800 CFM @ 0.25 inWC. Filter area 4’ x 3’. Use two 24” filters and two 24x12” filters in housing.
3.7	Dynamic Losses Duct and Fittings	Included in 3.6.
3.8	Expected max system pressure at req. flow	1.0 inWC
3.9	Detailed Head Loss Calculation Completed?	Yes

Section 4 - Blower Data					
4.0	Type	Vane axial direct drive	4.1	Impeller Dia.	24 inch nom.
4.2	Mfg.	Greenheck	4.3	Model No.	VAD-24H14-19-B15
4.4	Drive	Direct			
4.5	Sheave Ratio	N/A	4.6	RPM @ 60 Hz	1200 (1170)
4.7	Flow @ 60 Hz	4,000 CFM air @ 1.0 inWC			
4.8	Suction	24 in RD. duct	4.9	Discharge Flange	25.75” BC
4.10	Weight	367 lbs	4.11	Housing	32 lg x 24
4.12	Flange OD	27.75			
4.9	Notes:				

Section 5 - Motor Data					
5.0	Motor HP	1.5	5.1	Frame	182T
5.2	RPM	1200	5.3	Voltage	3-ph 460
5.4	SF	1.15	5.5	Duty	Continuous
5.6	Eff.	IE4	5.7	X-proof	Not required
5.8	Encl.	TEAO	5.9	Mfg.	Baldor is preferred

Section 6 – Flow Range				
CFM	**SP**	**RPM**	**Hz**	**BHP**
4,800	0.25 inWC	1170	60	<1 HP
4,000	1.0 inWC	1170	60	<1 HP
Notes	SP range from new filter to fouled filter			

Section 7 – Accessories				
line	**Description**	**P/N**	**Qty**	
10	Ionizer banks, 5-bulb units	KHF5-PE5	4	
20	Filter Area, 36x48, MERV 8, 2-in	24 x 24	4	
30	Filter Area, 36x48, MERV 8, 2-in	24 x 12	4	
Notes	Filter box access door should be installed in accessible location from a manlift.			

Basic Arrangement

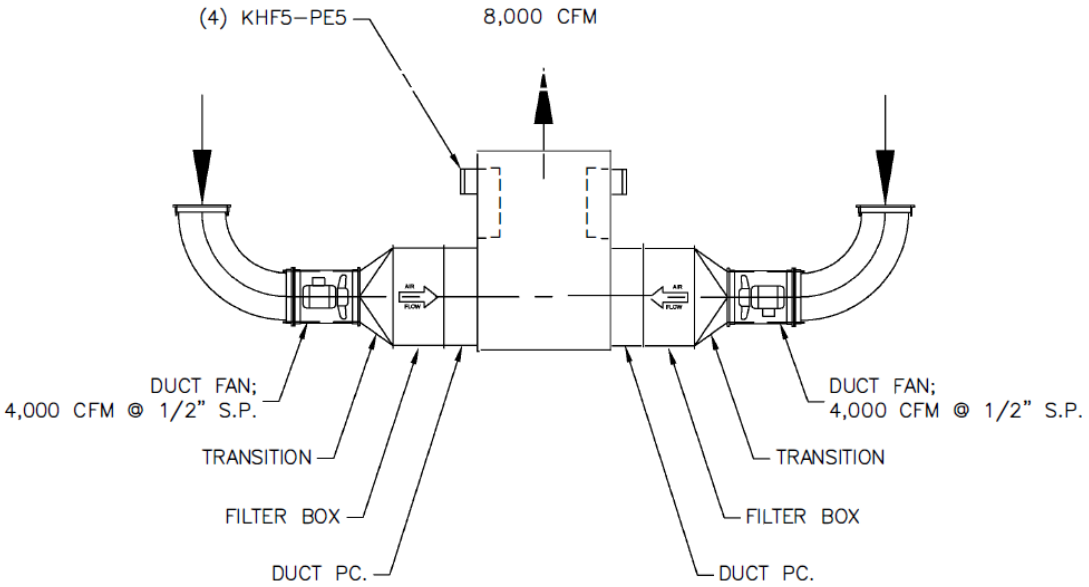

TOP VIEW

Discharge duct/union with 4 ionizer units

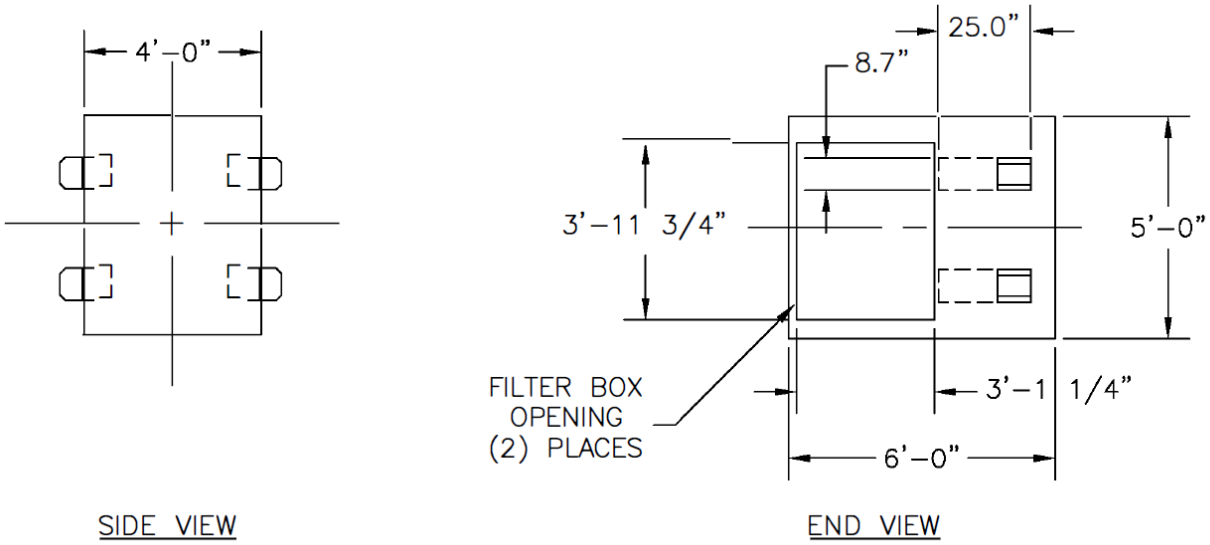

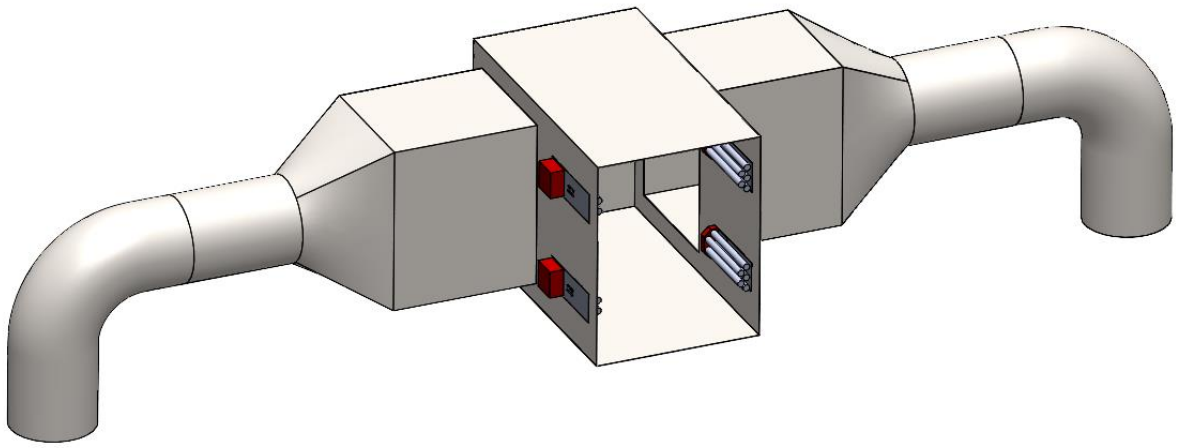

Performance	
Quantity	1
Volume (CFM)	4,018
Total External SP (in. wg)	1.009
Total TP (in. wg)	1.103
Operating Power (hp)	0.99
Required Power (hp)	0.99
Fan RPM	1170
Elevation (ft)	617
Start-up Temp.(F)	70
Operating Temp.(F)	70

Fan Configuration	
Size	24
Arrangement	4
Discharge Position	Horizontal
Mounting	Ceiling Hung
Material Type	Steel
Impeller Material	Aluminum

Equipment Weights	
Fan (LMD)(lb)	250
Motor/Drive (lb)	112
Accessories (lb)	5

Misc Fan Data	
FEG	75
Outlet Velocity (ft/min)	1,240
Static Efficiency (%)	64
Tip Speed (ft/min)	7,440
Thrust Weight (%)	5.1
Thrust Force (lb)	19

Motor and Drives	
Motor	Included
Size (hp)	1 1/2
RPM	1170
Enclosure	TEAO
V/C/P	460/60/3
Frame Size	182T
Max Frame Size	286

Model: VAD-24F17-24-B15
Vane Axial Direct Drive

Operating Performance

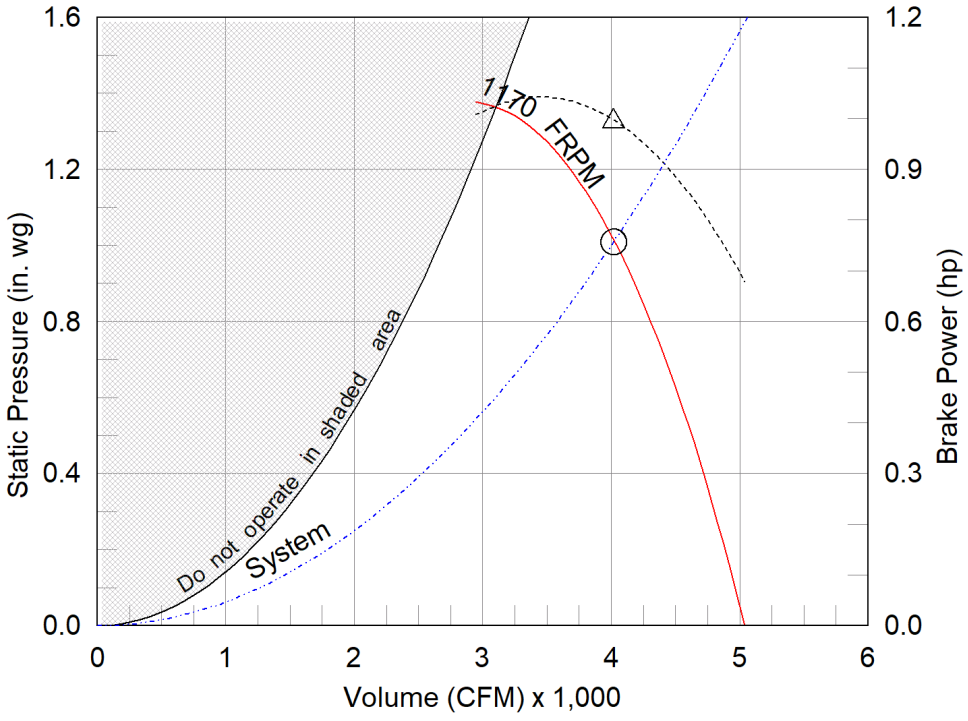

△ Operating Bhp point
◯ Operating point at Total External SP
Fan curve
System curve
Brake horsepower curve

Static Pressure Calculations	
External SP	1 in. wg
Direct Drive RPM Static Adj	0.009 in. wg
Total External SP	1.009 in. wg

Sound Power by Octave Band

Sound Data	62.5	125	250	500	1000	2000	4000	8000	LwA	dBA
Inlet	75	78	82	81	77	72	68	65	82	71

LwA - A weighted sound power level, based on ANSI S1.4
dBA - A weighted sound pressure level, based on 11.5 dB attenuation per octave band at 5 ft- dBA levels are not licensed by AMCA International

Model: VAD-24F17-24-B15

Vane Axial Direct Drive

Standard Construction Features:

HOUSING: Continuously welded steel housing - Welded steel straightening vanes - Inlet and outlet flanges with mounting holes - Electrical leads to external mounted junction box - Structural parts are phosphatized and coated with Permatector.

WHEEL: Aircraft quality, heat treated A356-T6 cast aluminum rotor hub and blades - Manually adjustable blade pitch.

Selected Options & Accessories:

NEMA Premium Efficient Motor - meets NEMA Table 12-12
Motor with Class F or Greater Insulation
Extended Motor Leads
Coating - Permatector, Concrete Gray-RAL 7023, Fan and Attached Accessories
Mounting Brackets - Ceiling Hung
UL/cUL-705 - "Power Ventilators"
Housing is sealed for outdoor use
Unit Warranty: 1 Yr (Standard)

Model: VAD-24F17-24-B15 Vane Axial Direct Drive

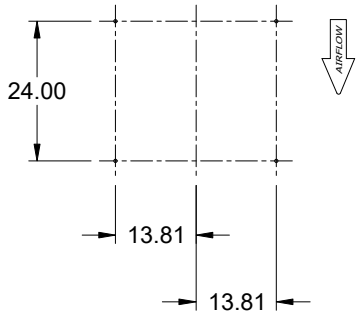

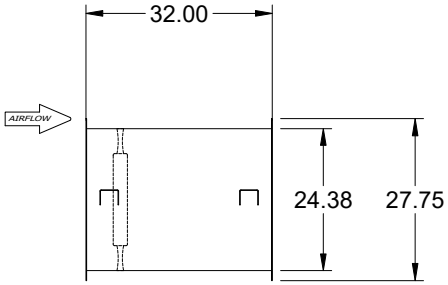

SIDE VIEW

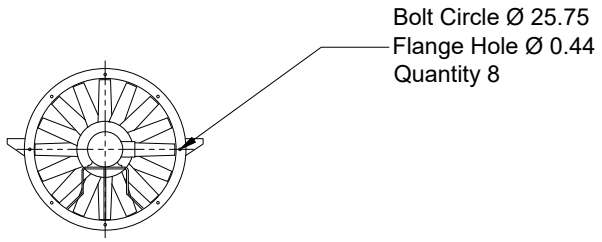

END VIEW

0.56 DIA. MOUNTING HOLES
END VIEW SHOWS FROM OUTLET END OF UNIT
UNIT IS NOT FIELD ROTATABLE

Notes: All dimensions shown are in units of in.

AMCA

AMCA Licensed for Air Performance. Power rating (BHP/kW) does not include transmission losses.

Greenheck Fan Corporation certifies that the model shown herein is licensed to bear the AMCA Seal. The ratings shown are based on tests and procedures performed in accordance with AMCA Publication 211 and comply with the requirements of the AMCA Certified Ratings Program. Performance certified is for installation type D - ducted inlet, ducted outlet. Performance ratings do not include the effects of appurtenances (accessories) in the airstream. Power ratings (BHP/kW) do not include transmission losses.

W-034A (EF-952) Building Exhaust Fan

Dewatering Area

19,000 CFM @ 2.5 inWC to 26,400 CFM @ 3.5 inWC

Variable Speed blower

REVISION LEVEL	DATE	DESCRIPTION	BY
0	10/17/21	INITIAL RELEASE	NMAST

Section 1 - Basic Equip. Data		
1.0	Tag No.	W-034A
1.1	Pulls from	Building, dewatering area
1.2	Blows to	Ionization reactor U-038 ahead of carbon guard bed
1.3	Installation	Outdoors

Section 2 – Fluid Properties								
2.0	Fluid Desc.	Odorous air from building, 19,000 CFM						
2.1	TS%	N/A	2.2	pH range	N/A	2.3	Temp. range	55 - 100° F
2.4	S.G.	1	2.5	Viscosity	0.0187 cP	2.6	Phase	Gas
2.7	Flammable		No					
2.8	Abrasives	Dust and moisture will be present.						
2.9	Corrosives	H2S < 5 PPMV, NH4 < 10 PPMV, water vapor						
2.10	Notes	Combines with flow from W-034B EF-953, also to operate @ 19,000 CFM						

Section 3 – System Requirements		
3.0	Flow Range	19,000 CFM @ 2.5 inWC, VFD control
3.1	Duty	Continuous
3.2	Suction Conditions	Ducted
3.3	Static Pressure Range	(-) 1.5 inWC at suction inlet
3.4	Static Discharge P	1 inWC max
3.6	Dynamic Losses from Inline Equipment	flow to unit through suction vents and 36-inch duct header. No inline filtration.
3.7	Dynamic Losses Duct and Fittings	Included in 3.6.
3.8	Expected max system pressure at req. flow	2.5 inWC
3.9	Detailed Head Loss Calculation Completed?	Yes.

Section 4 - Blower Data					
4.0	Type	Vane axial, belt drive	4.1	Impeller Dia.	36-in
4.2	Mfg.	Greenheck	4.3	Model No.	VAB-36F14-II-300
4.4	Drive	Belt			
4.5	Sheave Ratio	~1.06	4.6	RPM @ 60 Hz	1832
4.7	Flow @ 60 Hz	26,400 CFM air @ 3.5 inWC			
4.8	Suction Flange	36 in RD. see dim. page	4.9	Discharge Flange	36 in round
4.10	Weight	1350 lbs	4.11	base dim	40 x 35
4.12	Height	67” max with motor			

4.9	Notes:	Supplied and installed as part of the base building contract.

Section 5 - Motor Data					
5.0	Motor HP	30	5.1	Frame	286T
5.2	RPM	1800	5.3	Voltage	3-ph 460 / FLA 40
5.4	SF	1.15	5.5	Duty	Continuous
5.6	Eff.	IE4	5.7	X-proof	Not required / installed outdoors
5.8	Encl.	TEFC	5.9	Mfg.	Baldor is preferred

Section 6 – Flow Range				
CFM	**SP (inWC)**	**RPM**	**Hz**	**BHP**
19,000	2.5	1450	47	<30 HP
26,400	3.5	1832	60	<30 HP
Notes	Blower will normally operate together with W-034B, with both producing 19,000 CFM. It may also operate on its own up to 26,400 CFM.			

Performance	
Quantity	1
Volume (CFM)	26,400
Total External SP (in. wg)	3.5
Total TP (in. wg)	4.315
Operating Power (hp)	25.73
Required Power (hp)	25.73
Fan RPM	1832
Max Fan RPM	2,165
Elevation (ft)	617
Start-up Temp.(F)	70
Operating Temp.(F)	70

Fan Configuration	
Size	36
Class	II
Arrangement	9
Discharge Position	Horizontal
Mounting	Base Mount
Material Type	Steel
Impeller Material	Aluminum

Equipment Weights	
Fan (LMD)(lb)	800
Motor/Drive (lb)	472
Accessories (lb)	71

Misc Fan Data	
FEG	75
Outlet Velocity (ft/min)	3,658
Static Efficiency (%)	58
Tip Speed (ft/min)	17,390
Thrust Weight (%)	12.1
Thrust Force (lb)	162

Motor and Drives	
Motor	Included
Size (hp)	30
RPM	1725
Enclosure	TEFC
V/C/P	460/60/3
Frame Size	286T
Max Frame Size	326
Location	A
Pulley Type	Constant
Drive Loss (%)	3.3
Drives	Standard
Drive Service Factor	1.5
NEC FLA* (Amps)	40

Model: VAB-36F14-II-300

Vane Axial Belt Drive

Tags: EF-952

Operating Performance

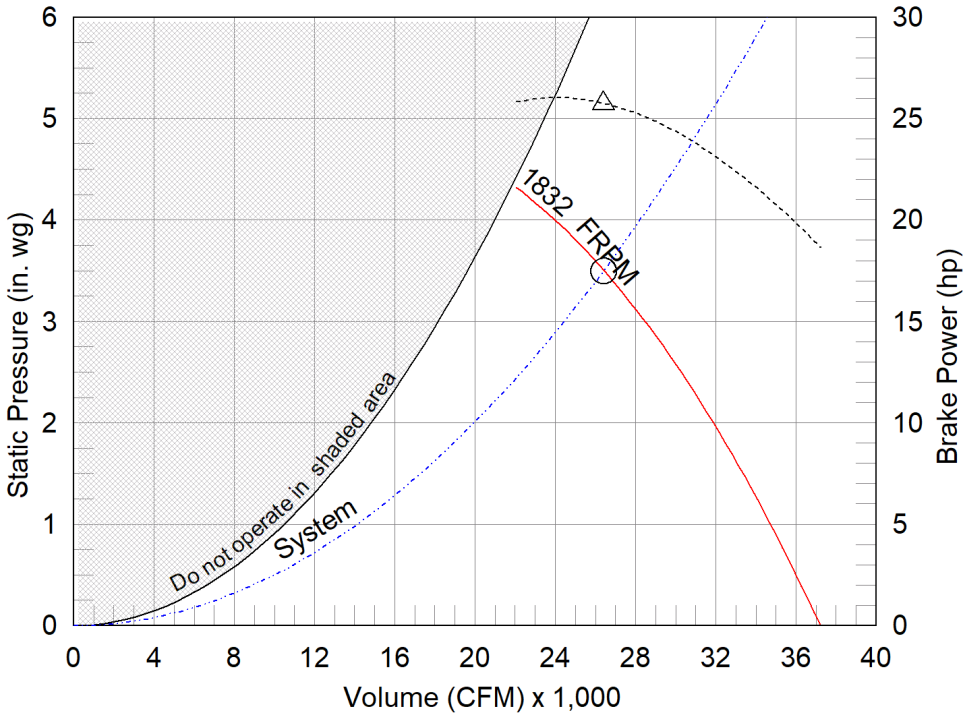

△ Operating Bhp point
◯ Operating point at Total External SP
Fan curve
System curve
Brake horsepower curve

Sound Power by Octave Band

Sound Data	62.5	125	250	500	1000	2000	4000	8000	LwA	dBA
Inlet	93	98	105	101	101	99	94	87	106	95

*FLA - based on tables 150 or 148 of National Electrical Code 2002. Actual motor FLA may vary, for sizing thermal overload, consult factory.
LwA - A weighted sound power level, based on ANSI S1.4
dBA - A weighted sound pressure level, based on 11.5 dB attenuation per octave band at 5 ft- dBA levels are not licensed by AMCA International

Model: VAB-36F14-II-300

Vane Axial Belt Drive

Standard Construction Features:

HOUSING: Continuously welded steel housing - Welded steel straightening vanes - Inlet and outlet flanges with mounting holes - Heavy gauge steel motor supports with adjustment screws for belt tensioning - Structural parts are phosphatized and coated with Permatector.

BEARINGS, SHAFT, AND WHEEL: Heavy duty, self-aligning ball or roller pillow block bearings with extended lubrication lines - Precision-ground, polished, solid steel shafts - Aircraft quality, heat treated A356-T6 cast aluminum rotor hub and blades.

Selected Options & Accessories:

NEMA Premium Efficient Motor - meets NEMA Table 12-12
Motor VFD Rated without Shaft Grounding Protection
Motor with Class B or Greater Insulation
Standard Drives
Coating - Permatector, Concrete Gray-RAL 7023, Fan and Attached Accessories
Mounting Brackets - Base Mount
UL/cUL-705 - "Power Ventilators"
Belt Guard
Thrust Restraints
Housing is not sealed for outdoor use
Unit Warranty: 1 Yr (Standard)

Model: VAB-36F14-II-300 Vane Axial Belt Drive

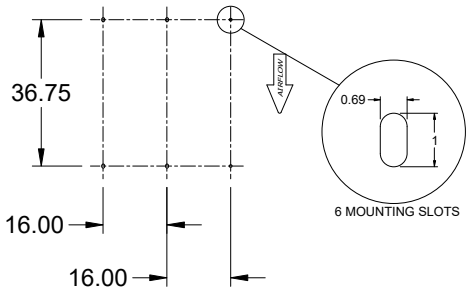

FOOTPRINT VIEW

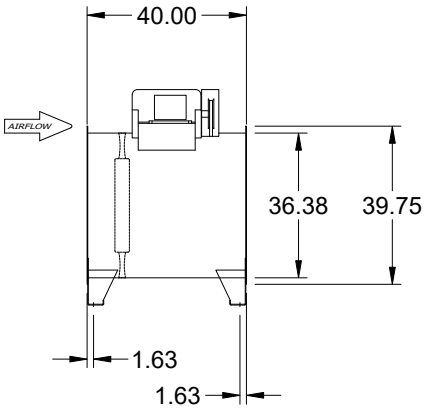

SIDE VIEW

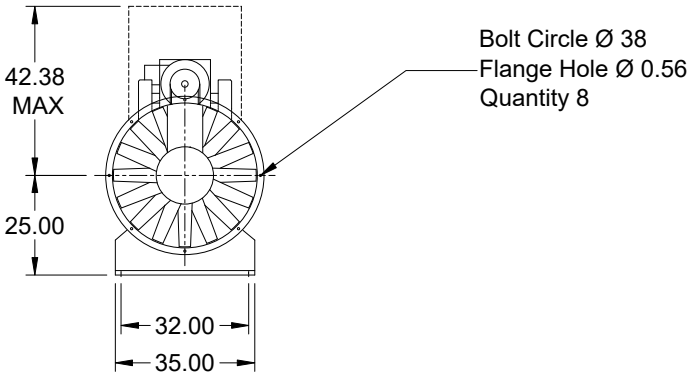

END VIEW

END VIEW SHOWS FROM OUTLET END OF UNIT
UNIT IS NOT FIELD ROTATABLE

Notes: All dimensions shown are in units of in.

VAB-36F14-II-300

Mark: EF-952 Belt Press Area

Chart Type: RPM Family

Requested Volume (CFM)	26,400	Actual Volume (CFM)	26,400	Total External SP (in. wg)	3.5
Elevation (ft)	617	Airstream Temp. (F)	70	Operating Power (hp)	25.73
Drive Loss (%)	3.3	Fan RPM	1832	Static Efficiency (%)	58

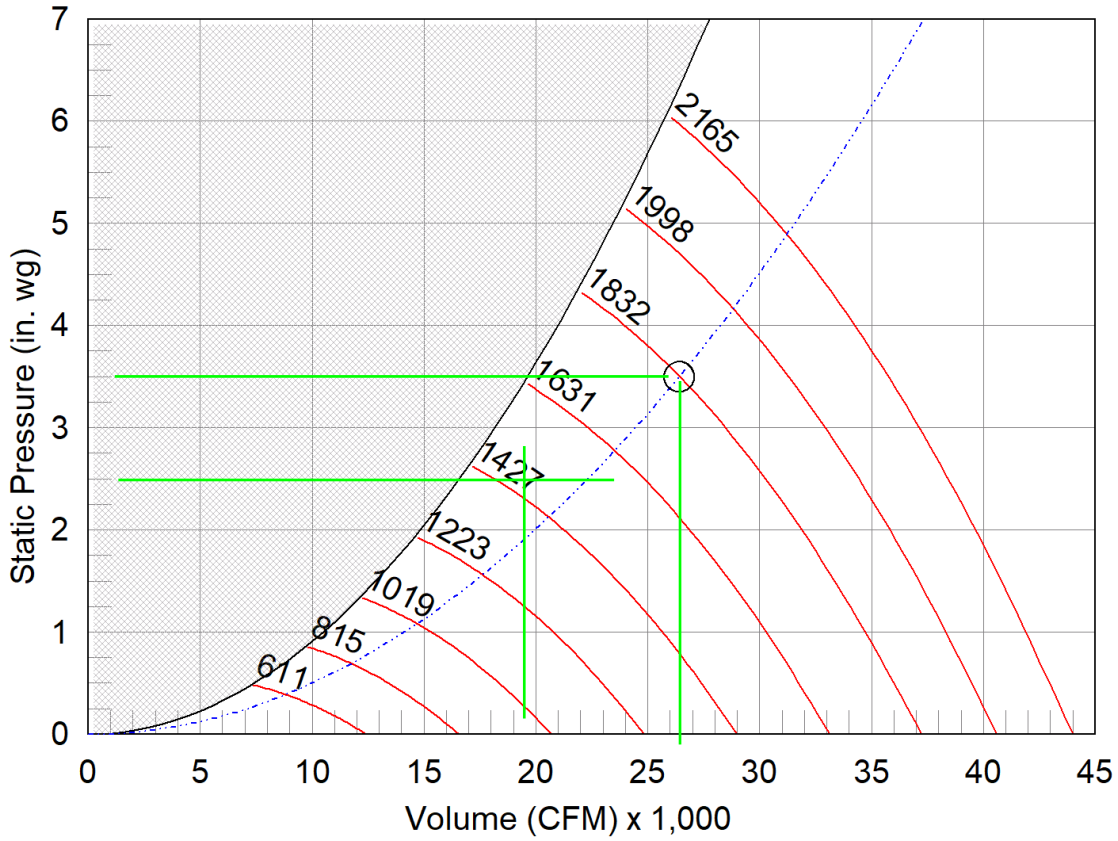

Operating Bhp point
Operating point at Total External SP
Fan curve
System curve
Brake horsepower curve

Sound Power by Octave Band

Sound Data	62.5	125	250	500	1000	2000	4000	8000	LwA	dBA	Sones
Inlet	93	98	105	101	101	99	94	87	106	95	84

LwA - A weighted sound power level, based on ANSI S1.4
dBA - A weighted sound pressure level, based on 11.5 dB attenuation per Octave band at 5 ft. dBA levels are not licensed by AMCA International
Sones - calculated using AMCA 301 at 5 ft

VAB-36F14-I-150

Mark: EF-952 Belt Press Area

Chart Type: RPM Family

Requested Volume (CFM)	19,000	Actual Volume (CFM)	19,000	Total External SP (in. wg)	2.5
Elevation (ft)	617	Airstream Temp. (F)	70	Operating Power (hp)	12.92
Drive Loss (%)	3.5	Fan RPM	1450	Static Efficiency (%)	60

plotted with 19,000 CFM @ 2.5 as the operating point.

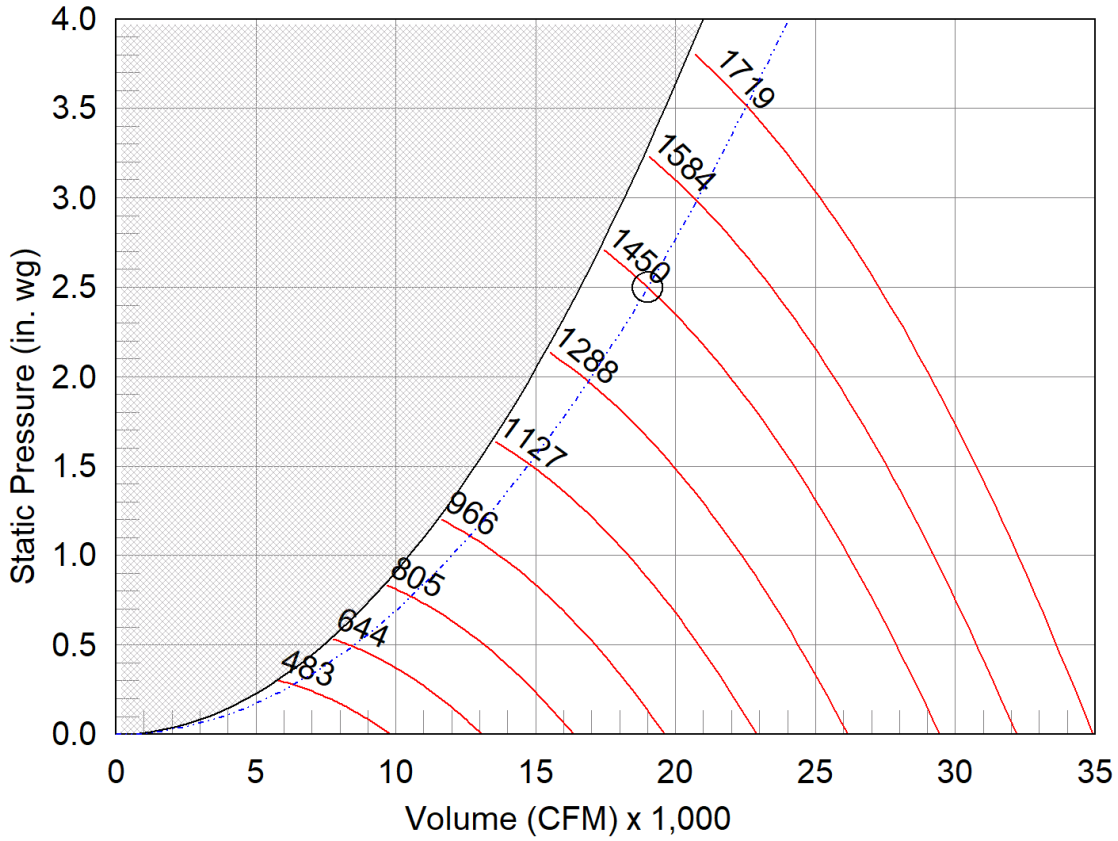

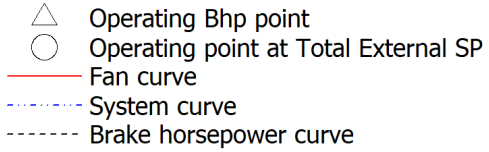

Sound Power by Octave Band

Sound Data	62.5	125	250	500	1000	2000	4000	8000	LwA	dBA	Sones
Inlet	90	96	99	97	96	92	87	80	100	88	54

LwA - A weighted sound power level, based on ANSI S1.4
dBA - A weighted sound pressure level, based on 11.5 dB attenuation per Octave band at 5 ft. dBA levels are not licensed by AMCA International
Sones - calculated using AMCA 301 at 5 ft

W-034B (EF-953) Building Exhaust Fan

Feedstock Processing Area

19,000 CFM @ 2.5 inWC to 33,600 CFM @ 3.9 inWC

Variable Speed blower

REVISION LEVEL	DATE	DESCRIPTION	BY
0	10/17/21	INITIAL RELEASE	NMAST

Section 1 - Basic Equip. Data		
1.0	Tag No.	W-034B, EF-953 on building plans
1.1	Pulls from	Building, feedstock processing area
1.2	Blows to	Ionization reactor U-038 ahead of carbon guard bed
1.3	Installation	Outdoors

Section 2 – Fluid Properties								
2.0	Fluid Desc.	Odorous air from building, 19,000 CFM						
2.1	TS%	N/A	2.2	pH range	N/A	2.3	Temp. range	55 - 100° F
2.4	S.G.	1	2.5	Viscosity	0.0187 cP	2.6	Phase	Gas
2.7	Flammable		No					
2.8	Abrasives	Dust and moisture will be present.						
2.9	Corrosives	H2S < 5 PPMV, NH4 < 10 PPMV, water vapor						
2.10	Notes	Combines with flow from W-034A EF-952, also to operate @ 19,000 CFM						

Section 3 – System Requirements		
3.0	Flow Range	19,000 CFM @ 2.5 inWC, VFD control
3.1	Duty	Continuous
3.2	Suction Conditions	Ducted
3.3	Static Pressure Range	(-) 1.5 inWC at suction inlet
3.4	Static Discharge P	1 inWC max
3.6	Dynamic Losses from Inline Equipment	flow to unit through suction vents and 36-inch duct header. No inline filtration.
3.7	Dynamic Losses Duct and Fittings	Included in 3.6.
3.8	Expected max system pressure at req. flow	2.5 inWC
3.9	Detailed Head Loss Calculation Completed?	Yes.

Section 4 - Blower Data					
4.0	Type	Vane axial, belt drive	4.1	Impeller Dia.	36-in
4.2	Mfg.	Greenheck	4.3	Model No.	VAB-36F14-II-500
4.4	Drive	Belt			
4.5	Sheave Ratio	~1.18	4.6	RPM @ 60 Hz	2131
4.7	Flow @ 60 Hz	33,600 CFM air @ 3.9 inWC			
4.8	Suction Flange	36 in RD. see dim. page	4.9	Discharge Flange	36 in round
4.10	Weight	1608 lbs	4.11	base dim	40 x 35
4.12	Height	67” max with motor			

4.9	Notes:	Supplied and installed as part of the base building contract.

Section 5 - Motor Data					
5.0	Motor HP	50	5.1	Frame	326T
5.2	RPM	1800	5.3	Voltage	3-ph 460 / FLA 65
5.4	SF	1.15	5.5	Duty	Continuous
5.6	Eff.	IE4	5.7	X-proof	Not required / installed outdoors
5.8	Encl.	TEFC	5.9	Mfg.	Baldor is preferred

Section 6 – Flow Range				
CFM	**SP (inWC)**	**RPM**	**Hz**	**BHP**
19,000	2.5	1450	41	<30 HP
33,600	3.9	2131	60	<50 HP
Notes	Blower will normally operate together with W-034A, with both producing 19,000 CFM. It may also operate on its own up to 33,600 CFM.			

Performance	
Quantity	1
Volume (CFM)	33,600
Total External SP (in. wg)	3.9
Total TP (in. wg)	5.221
Operating Power (hp)	39.1
Required Power (hp)	39.1
Fan RPM	2131
Max Fan RPM	2,165
Elevation (ft)	617
Start-up Temp.(F)	70
Operating Temp.(F)	70

Fan Configuration	
Size	36
Class	II
Arrangement	9
Discharge Position	Horizontal
Mounting	Base Mount
Material Type	Steel
Impeller Material	Aluminum

Equipment Weights	
Fan (LMD)(lb)	800
Motor/Drive (lb)	737
Accessories (lb)	71

Misc Fan Data	
FEG	75
Outlet Velocity (ft/min)	4,656
Static Efficiency (%)	54
Tip Speed (ft/min)	20,225
Thrust Weight (%)	12.2
Thrust Force (lb)	196

Motor and Drives	
Motor	Included
Size (hp)	50
RPM	1725
Enclosure	TEFC
V/C/P	460/60/3
Frame Size	326T
Max Frame Size	326
Location	A
Pulley Type	Constant
Drive Loss (%)	3.2
Drives	Standard
Drive Service Factor	1.5
NEC FLA* (Amps)	65

Model: VAB-36F14-II-500
Vane Axial Belt Drive

Tags: EF-953

Operating Performance

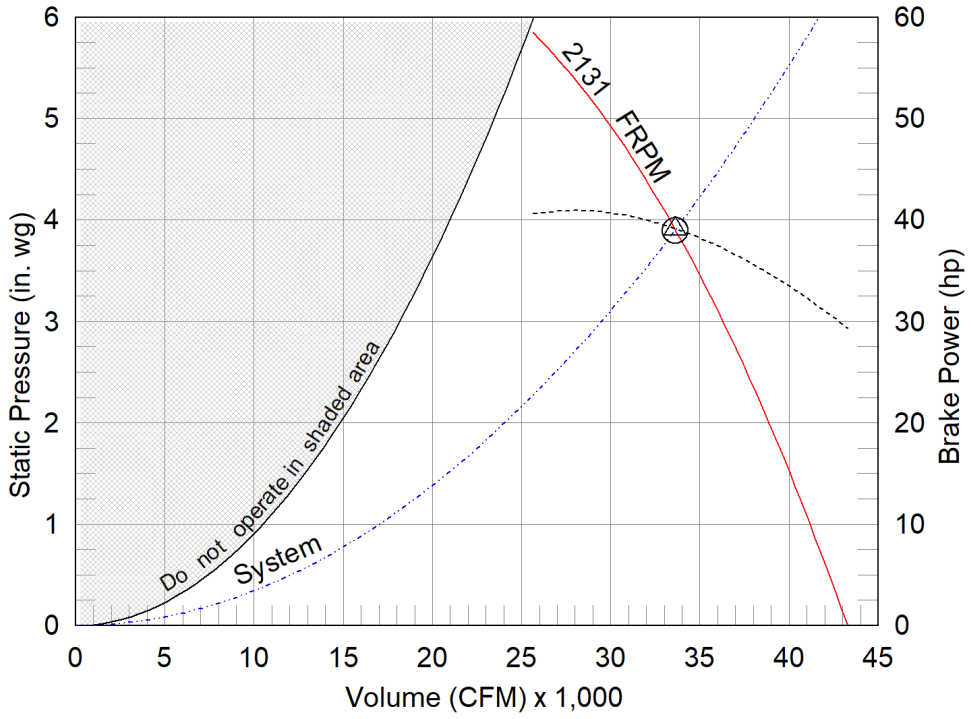

△ Operating Bhp point
◯ Operating point at Total External SP
Fan curve
System curve
Brake horsepower curve

Sound Power by Octave Band

Sound Data	62.5	125	250	500	1000	2000	4000	8000	LwA	dBA
Inlet	100	105	112	110	109	107	103	96	114	102

*FLA - based on tables 150 or 148 of National Electrical Code 2002. Actual motor FLA may vary, for sizing thermal overload, consult factory.
LwA - A weighted sound power level, based on ANSI S1.4
dBA - A weighted sound pressure level, based on 11.5 dB attenuation per octave band at 5 ft- dBA levels are not licensed by AMCA International

Model: VAB-36F14-II-500

Vane Axial Belt Drive

Standard Construction Features:

HOUSING: Continuously welded steel housing - Welded steel straightening vanes - Inlet and outlet flanges with mounting holes - Heavy gauge steel motor supports with adjustment screws for belt tensioning - Structural parts are phosphatized and coated with Permatector.

BEARINGS, SHAFT, AND WHEEL: Heavy duty, self-aligning ball or roller pillow block bearings with extended lubrication lines - Precision-ground, polished, solid steel shafts - Aircraft quality, heat treated A356-T6 cast aluminum rotor hub and blades.

Selected Options & Accessories:

NEMA Premium Efficient Motor - meets NEMA Table 12-12
Motor VFD Rated without Shaft Grounding Protection
Motor with Class B or Greater Insulation
Standard Drives
Coating - Permatector, Concrete Gray-RAL 7023, Fan and Attached Accessories
Mounting Brackets - Base Mount
UL/cUL-705 - "Power Ventilators"
Belt Guard
Thrust Restraints
Housing is not sealed for outdoor use
Unit Warranty: 1 Yr (Standard)

Model: VAB-36F14-II-500 Vane Axial Belt Drive

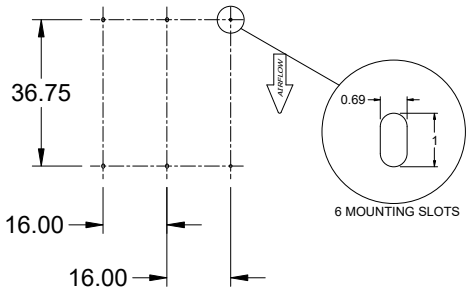

FOOTPRINT VIEW

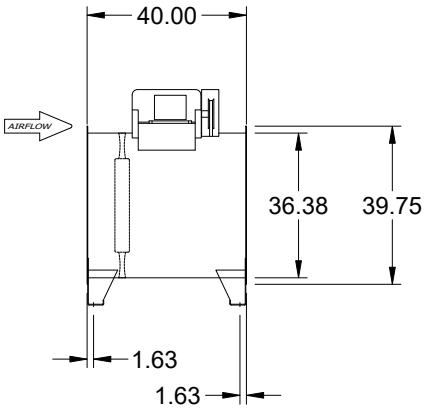

SIDE VIEW

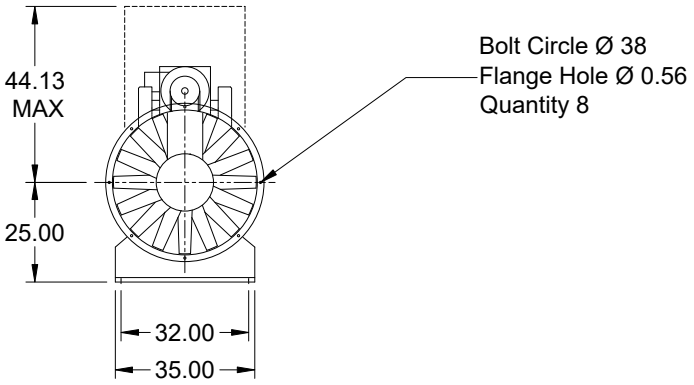

END VIEW

END VIEW SHOWS FROM OUTLET END OF UNIT
UNIT IS NOT FIELD ROTATABLE

Notes: All dimensions shown are in units of in.

AMCA

AMCA Licensed for Air Performance. Power rating (BHP/kW) includes transmission losses.

Greenheck Fan Corporation certifies that the model shown herein is licensed to bear the AMCA Seal. The ratings shown are based on tests and procedures performed in accordance with AMCA Publication 211 and comply with the requirements of the AMCA Certified Ratings Program. The AMCA Certified Ratings Seal applies to air performance ratings only. Performance certified is for installation type D - Ducted inlet, ducted outlet. Performance ratings do not include the effects of appurtenances (accessories) in the airstream. Power ratings (BHP/kW) include transmission losses.

VAB-36F14-II-500

Mark: EF-953 Process Hall

Chart Type: RPM Family

Requested Volume (CFM)	33,600	Actual Volume (CFM)	33,600	Total External SP (in. wg)	3.9
Elevation (ft)	617	Airstream Temp. (F)	70	Operating Power (hp)	39.1
Drive Loss (%)	3.2	Fan RPM	2131	Static Efficiency (%)	54

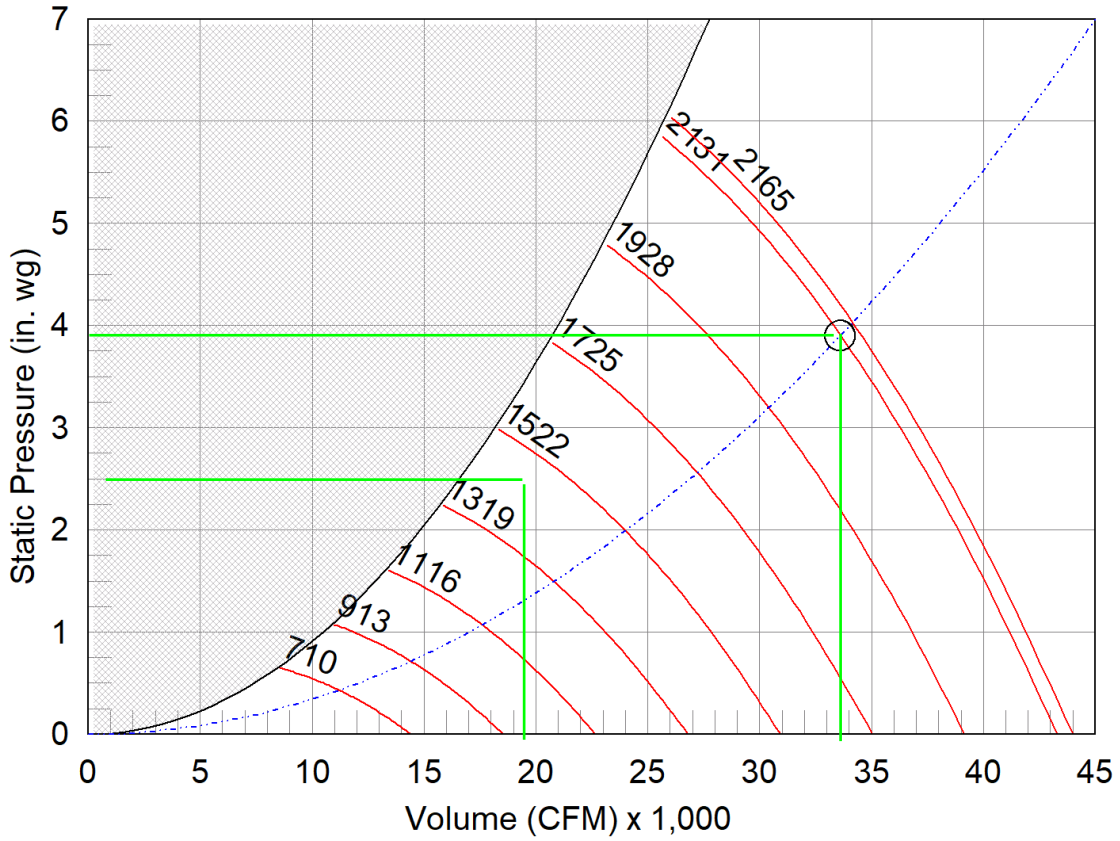

Operating Bhp point
Operating point at Total External SP
Fan curve
System curve
Brake horsepower curve

Sound Power by Octave Band

Sound Data	62.5	125	250	500	1000	2000	4000	8000	LwA	dBA	Sones
Inlet	100	105	112	110	109	107	103	96	114	102	148

LwA - A weighted sound power level, based on ANSI S1.4
dBA - A weighted sound pressure level, based on 11.5 dB attenuation per Octave band at 5 ft. dBA levels are not licensed by AMCA International
Sones - calculated using AMCA 301 at 5 ft

W-036 Ionization Reactor Blower

4,120 CFM @ 2 inWC with 3 HP motor

(7000 m3/h)

REVISION LEVEL	DATE	DESCRIPTION	BY
0	10/17/21	INITIAL RELEASE	NMAST

Section 1 - Basic Equip. Data		
1.0	Tag No.	W-036
1.1	Pulls from	Outdoor air, inlet is filtered
1.2	Blows to	Mixing plenum U-036
1.3	Installation	Inside 40’ ISO mechanical container

Section 2 – Fluid Properties								
2.0	Fluid Desc.	Fresh outdoor air, not conditioned						
2.1	TS%	N/A	2.2	RH range	50-100%	2.3	Temp. range	10 - 100° F
2.4	S.G.	1	2.5	Viscosity	0.0187 cP	2.6	Phase	Gas
2.7	Flammable		No					
2.8	Abrasives	Moisture may be present.						
2.9	Corrosives	None						
2.10	Notes	Provide inlet air filter per ionizer recommendation						

Section 3 – System Requirements		
3.0	Flow Range	4,120 CFM @ 2 inWC, VFD control to low of 0.5 inWC @ same flow rate
3.1	Duty	Continuous
3.2	Suction Conditions	Ducted
3.3	Static Pressure Range	(-) 0 to (-) 0.4 inWC at suction inlet
3.4	Static Discharge P	1.6 inWC max
3.6	Dynamic Losses from Inline Equipment	Allow for 2 inWC total SP.
3.7	Dynamic Losses Duct and Fittings	Included in 3.6.
3.8	Expected max system pressure at req. flow	2 inWC
3.9	Detailed Head Loss Calculation Completed?	No. Need losses for ionizer banks and filter spec.

Section 4 - Blower Data					
4.0	Type	Backward Inclined. Single width	4.1	Impeller Dia.	24 inch nom.
4.2	Mfg.	New York Blower	4.3	Model No.	SWSI size24 cl. 1
4.4	Drive	Belt, provide guard			
4.5	Sheave Ratio	~1.73	4.6	RPM @ 60 Hz	1038
4.7	Flow @ 60 Hz	4,120 CFM air @ 2 inWC			
4.8	Suction	27 in RD. duct see dim. page	4.9	Discharge Flange	Rect., bolt flange. ~27 x 18, see dim. page
4.10	Weight	838 lbs	4.11	base dim	54.5 x 38.5

4.12	Height	58.5 with base			
4.9	Notes:	Arrangement 1, unitary base. CCW rotation from driven side. Motor position "W", blower outlet, top horizontal (TH)			

Section 5 - Motor Data					
5.0	Motor HP	3	5.1	Frame	182T
5.2	RPM	1800	5.3	Voltage	3-ph 460
5.4	SF	1.15	5.5	Duty	Continuous
5.6	Eff.	IE4	5.7	X-proof	Not required
5.8	Encl.	TEFC	5.9	Mfg.	Baldor is preferred

Section 6 – Flow Range				
CFM	**SP**	**RPM**	**Hz**	**BHP**
4,120	2 inWC	1038	60	<3 HP
Notes	Blower will normally will operate near flow set-point, but pressure range may vary and primarily depend on outlet air pressure in the mixing plenum from the building exhaust fans W-034AB (EF-952, EF-953)			

The New York Blower Company
Fan-to-Size
Fan Selection Detail

W-036 - ionization blower
4120 CFM @ 2inWC

Fan Design

Product:	Backward Inclined SWSI
Type:	Backward-Inclined
Size:	24
Fan Class:	1
Wheel Type:	Backward Inclined (airfoil: ACF/ECF) - ACF
Wheel Material:	Carbon Steel
Wheel Weight:	71.0 lb
Wheel WR²:	38 lb-ft2
Percent Width:	100%
Percent Diameter:	100.0%
Outlet Area:	3.45 sq. ft.
Options:	None

Axial thrust load is 46.4 lbf.

Calculation Mode: Find Speed

Drive Type:	Belt
Arrangement:	1
Outlet Velocity:	1220 ft/min
Static Efficiency:	73.08%
Total Efficiency:	76.4%
Operating Temp:	70° F
Maximum Temp:	100° F
Maximum Speed: (1)	1779 RPM
Velocity Pressure:	0.09 in wg
Fan Static Pressure:	2 in wg
Fan Total Pressure:	2.09 in wg
Altitude:	600 ft

Conditions (Standard Volume; Fan Static Pressure)

	Flow	Pressure	Power	Speed	Speed Limit (2)	Density	Altitude	Inlet Temp.
	SCFM	in wg (FSP)	bhp	rpm	rpm	lb/ft3	ft	F
Operating	4120	2	1.82	1038	1790	0.0734	600	70
Cold	4120	2.26	2.05	1038	1790	0.0828	600	10
Standard	4120	2.04	1.86	1038	1790	0.0750	0	70

(1) Speed Limit at Maximum Temperature (2) Speed Limit at indicated Inlet Temperature

My Sales Representative

Air McClure Co.
19111 Detroit Rd Suite 307 Rocky River, OH 44116, USA
(P) 440.356.7332, (F) 440.356.9339
nyb@airmcclure.com

The New York Blower Company certifies that the Backward Inclined SWSI fan is licensed to bear the AMCA Air Performance Seal. The ratings shown are based on tests and procedures performed in accordance with AMCA Publication 211 and comply with the requirements of the AMCA Certified Ratings program. AMCA Licensed for Air Performance without Appurtenances (Accessories). Power HP (bhp) excludes drives. Performance certified is for installation type: B - free inlet, ducted outlet.

Copyright 2016-2019 New York Blower

Sound Power Level Ratings

Sound power and sound pressure levels are shown in decibels. (Power levels reference 10-12 watts and pressure levels reference 2x10-7 microbar.) Sound power ratings are calculated per AMCA Standard 301. Ratings do not include the effects of duct end correction. Sound levels do not include motors or drives. Pressure levels are estimated. A-weighing is per ANSI S.1.42-2001 (R2011).

Fan Sound

Center Freq (Hz)	63	125	250	500	1000	2000	4000	8000	Overall
Octave	1	2	3	4	5	6	7	8	
Inlet Total Power, dB	78	82	80	74	71	66	60	55	**86**
Point of Operation	0	-2	-4	-2	-3	-3	-4	-4	
A-Weighting	-26.2	-16.1	-8.6	-3.2	0	1.2	1	-1.1	
Convert To Pressure	-17.5	-17.5	-17.5	-17.5	-17.5	-17.5	-17.5	-17.5	
Inlet Total Pressure, dBA	34	46	50	52	51	47	40	33	**57**
Outlet Total Power, dB	78	82	80	74	71	66	60	55	**86**
Point of Operation	0	-2	-4	-2	-3	-3	-4	-4	
A-Weighting	-26.2	-16.1	-8.6	-3.2	0	1.2	1	-1.1	
Convert To Pressure	-17.5	-17.5	-17.5	-17.5	-17.5	-17.5	-17.5	-17.5	
Outlet Total Pressure, dBA	34	46	50	52	51	47	40	33	**57**
Fan Total Power, dB	81	85	83	77	74	69	63	58	**89**
Point of Operation	0	-2	-4	-2	-3	-3	-4	-4	
Housing Radiated Noise	-5	-9	-12	-15	-12	-11	-13	-14	
A-Weighting	-26.2	-16.1	-8.6	-3.2	0	1.2	1	-1.1	
Convert To Pressure	-17.5	-17.5	-17.5	-17.5	-17.5	-17.5	-17.5	-17.5	
Fan Total Pressure, dBA	32	40	41	40	42	39	30	22	**48**

Directivity/Reflection is a hemispherical radiation (Q = 2); Distance is 10 ft.
At 10 ft, the estimated sound pressure level:

1. outside the fan due to an open inlet OR outlet is 57 dBA.
2. housing radiated noise when inlet and outlet are ducted away from listening point is 48 dBA.

The sound power and pressure levels displayed here are estimated values based on tests and ratings conducted in accordance with AMCA standards 300 and 301. AMCA does not certify any of these ratings.

Copyright 2016-2019 New York Blower

The New York Blower Company
Fan-to-Size
Fan Selection Detail

% SPD	RPM	Hz
110%	1142	66
100%	1038	60
90%	934	54
80%	830	48

Product: Backward Inclined SWSI
Material: Carbon Steel
Fan Size: 24, Fan Class: 1
Arrangement: 1
Wheel Type: Backward Inclined (airfoil: ACF/ECF) - ACF
Options: None

Standard Volume Flow Rate: 4120 SCFM
Fan Static Pressure: 2 in wg
Speed: 1038 rpm
Power: 1.82 bhp

Inlet Temperature: 70 °F
Altitude: 600 ft
Density: 0.0734 lb/ft3
Outlet Velocity: 1220 ft/min

Additional fan speeds shown: 1142 RPM, 935 RPM, 831 RPM.

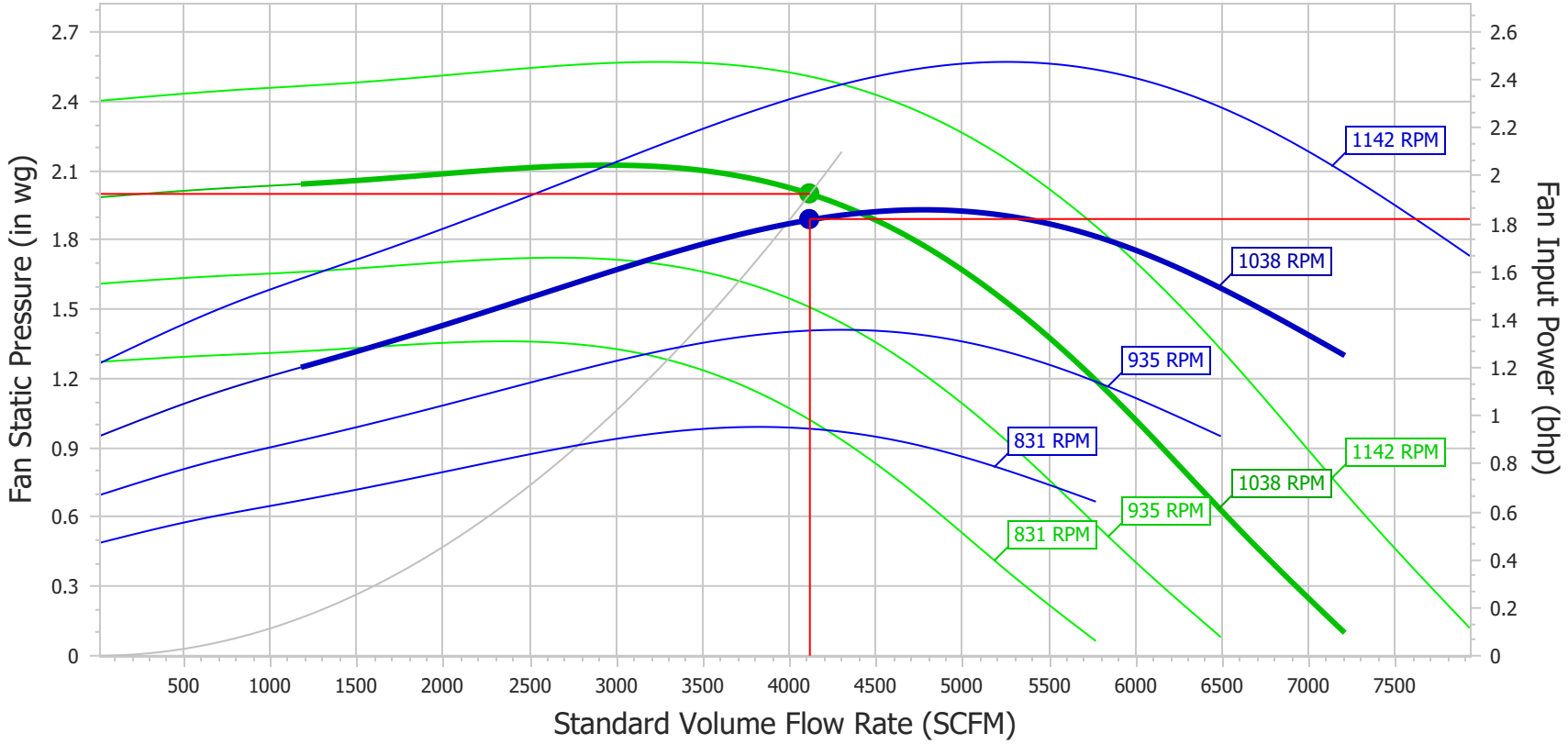

AMCA Licensed for Air Performance without Appurtenances (Accessories). Power HP (bhp) excludes drives. Performance certified is for installation type: B - free inlet, ducted outlet.

Copyright 2016-2019 New York Blower

SPECIFYING SINGLE-WIDTH ACOUSTAFOIL FANS

GENERAL

The fans shall be size 24 single-width single-inlet capable of operating over the entire range in accordance with the equipment schedule and as defined in AMCA Standard 99-2408 as designed and manufactured by The New York Blower Company. Fan wheels shall utilize non-overloading airfoil blades in all sizes. Unless otherwise directed, fans shall be in compliance with the layout shown on the drawings.

PERFORMANCE

Fan ratings shall be based on tests made in accordance with AMCA Standard 210 and licensed to bear the AMCA Certified Ratings Seal for Air Performance. Fans not licensed to bear the AMCA Seal for performance shall be tested, at supplier's expense, in an AMCA Registered Laboratory. (Option: Only AMCA certified fans will be accepted.) Fans shall have a sharply rising pressure characteristic extending throughout the operating range to assure quiet and stable operation under all conditions from wide open to closed off. Fan brake horsepower shall be equal to or less than 1.82 bhp at 2 in wg static pressure and 4120 cfm at 0.0734 lb/ft3 density.

SOUND

Fan manufacturers shall provide sound power level ratings for fans tested and rated in accordance with AMCA Standards 300 and 301. Sound power ratings shall be in decibels (reference 10-12 watts) in eight octave bands. Sound power levels will be corrected for installation by the specifying engineer...dBA levels only are not acceptable.

CONSTRUCTION

Fan housings are to be heavy gauge, continuously welded construction. Housings with lock seams or partially welded construction are not acceptable. Housings are to be reinforced with rigid bracing to increase structural integrity and prevent vibration. Housing inlet cones shall be aerodynamically designed and spun providing a minimum separation of air flow. Wheel diameters and outlet areas shall be in accordance with the standard dimensions adopted by AMCA for centrifugal fans. Designs not in accordance with AMCA Standard 99-2401 are not acceptable.

BEARINGS

Bearings are to be heavy duty, grease lubricated, precision anti-friction ball or spherical roller, self-aligning, pillow block design. Bearings shall be designed for a minimum L-10 life of 40,000 hours (200,000 hour L-50 life) when rated at the fan's maximum cataloged operating speed. (Optional: bearings to have minimum L-10 life of 250,000 hours.)

SHAFT

Shafts are to be ASTM A-108 steel, grade 1040/1045, precision turned, ground and polished. Grade 1018 steel is not acceptable. The shaft's first critical speed shall be at least 125% of the fan's maximum operating speed. The drive end of the fan shaft shall be counter-sunk for tachometer readings.

PAINT

All fan surfaces are to be thoroughly prepared prior to painting using a combination of washing and hand and power tool cleaning as required. After cleaning, all surfaces are to be coated with an industrial grade alkyd enamel. Surfaces of bolted components not accessible after assembly shall be coated and allowed to dry prior to final assembly. Primer only will not be accepted.

BALANCE AND RUN TEST

All fan wheels shall be dynamically balanced on precision balancers. Prior to shipment, completed fans shall receive a final test balance at the specified operating speed.

Copyright 2016-2019 New York Blower

ACCESSORIES

Accessories shall be provided as in the plans and specifications.
Required accessories include (select appropriate items):

_X_ Cleanout Door:
- ___ Quick Opening
- ___ Flush Bolted
- _X_ Raised Bolted

___ Spark-Resistant Construction:
- ___ Airstream Type
- ___ Wheel Type
- ___ Buffer Type

_X_ Drain
___ Drain Plug
___ Split Housing (non-rotatable fans only)
_X_ Flanged Outlet
___ Outlet Companion Flange
___ Shaft Seal:
- ___ Ceramic Felt
- ___ Buna-N
- ___ Viton®
- ___ Teflon®

___ Flanged Inlet
___ Inlet Companion Flange
___ Inlet-Vane Damper:
- ___ Internal
- ___ External

___ Heat-Fan Construction
___ Heavy-Duty Slide Rails (Arrangement 9 only)
_X_ Outlet Damper:
- _X_ Parallel Blade
- ___ Opposed Blade

_X_ Safety Equipment:
- _X_ Belt Guard with Tachometer Opening and Plug
- ___ Shaft and Bearing Guard with Extended Bearing Lubrication Fittings
- ___ Inlet Guard
- ___ Outlet Guard

_X_ Unitary Base
___ Isolation Base:
- ___ Spring
- ___ Rubber-In-Shear

_X_ V-Belt Drive:
- ___ Adjustable
- _X_ Constant

___ Flexible Coupling

FINAL INSPECTION

All fans shall receive a final inspection by a qualified inspector prior to shipment. Inspection to include: fan description and accessories, balance, welding, dimensions, bearings, duct and base connection points, paint finish and overall workmanship.

Viton and Teflon are registered trademarks of DuPont Dow Elastomers and DuPont respectively.

Copyright 2016-2019 New York Blower

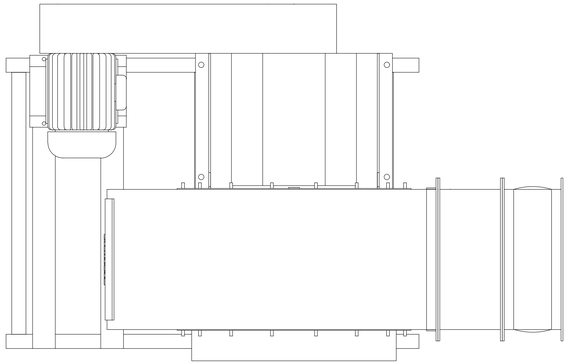

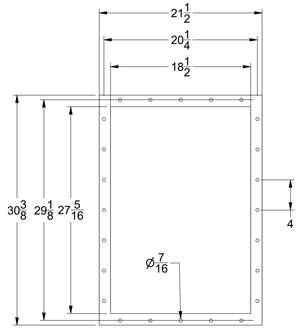

OUTLET FLANGE

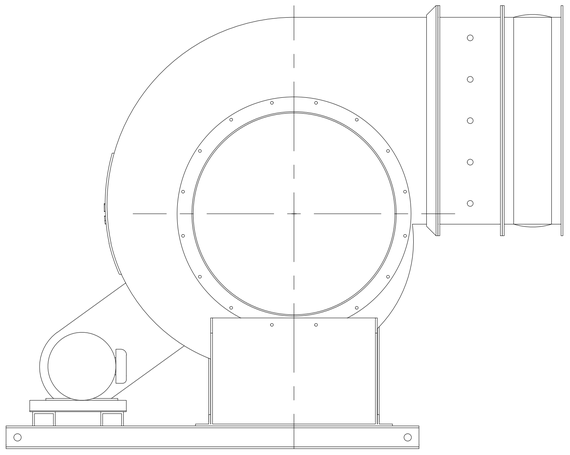

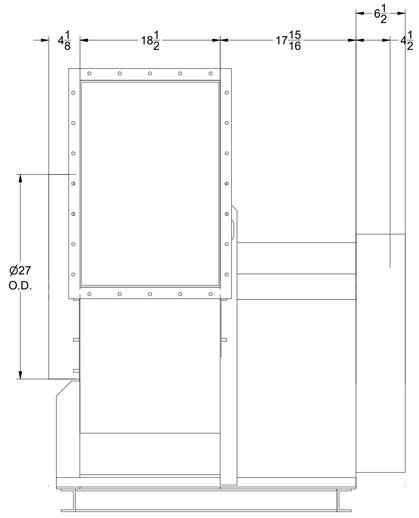

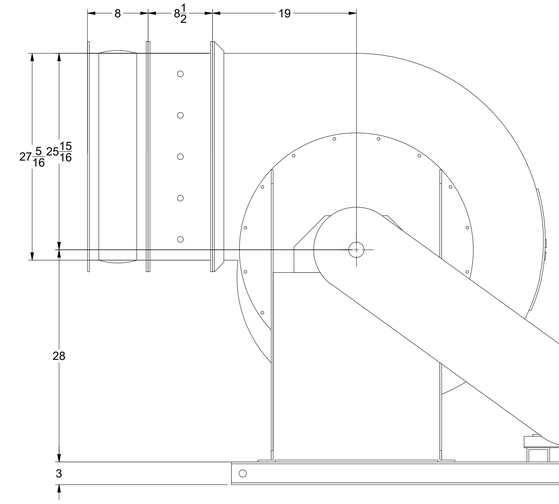

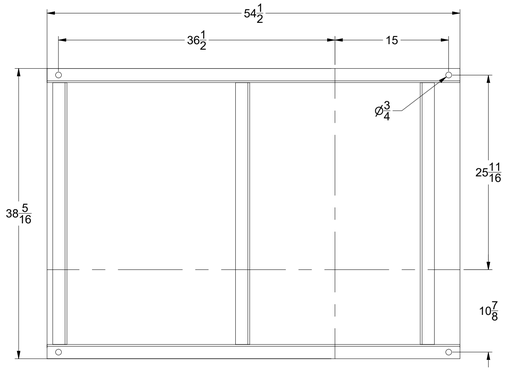

EST FAN SHIPPING WEIGHT 837.9#
EST SHIPPING DIM 98 W X 71 L X 70 H

CUSTOMER Green Era
CUSTOMER'S NO.
FILE NO. DOD189670
TAGGING W-036

NOTICE: This drawing is the property of THE NEW YORK BLOWER CO. and is loaned subject to the condition that it shall not be reproduced, copied, loaned or submitted to outside parties without our consent.

24 BACKWARD INCLINED SWSI
CLASS I CCW TH
Arrangement 1
Motor Pos W

PROPOSAL DRAWING ONLY

DRAWN DOD | DATE 10/16/2021

nyb THE NEW YORK BLOWER COMPANY
7660 Quincy Street
Willowbrook, IL 60527-5530
Visit us on the Web: http://www.nyb.com
Phone: (800) 208-7918 Email: nyb@nyb.com

DRAWING NUMBER
DOD189670

W-038 Odor Scrubber Blower

42,000 CFM @ 12 inWC with 125 HP motor

REVISION LEVEL	DATE	DESCRIPTION	BY
0	10/17/21	INITIAL RELEASE	NMAST

Section 1 - Basic Equip. Data		
1.0	Tag No.	W-038
1.1	Pulls from	Carbon Bed, T-038, via building, ducted supply, W-034AB, ionization reactor, W-036
1.2	Blows to	Exhaust stack
1.3	Installation	Inside sound enclosure that is not conditioned. May pull air for ionizers through the container for motor cooling.

Section 2 – Fluid Properties								
2.0	Fluid Desc.	Odorous air from building, 38,000 CFM						
2.1	TS%	N/A	2.2	pH range	N/A	2.3	Temp. range	55 - 100° F
2.4	S.G.	1	2.5	Viscosity	0.0187 cP	2.6	Phase	Gas
2.7	Flammable		No					
2.8	Abrasives	Dust and moisture will be present.						
2.9	Corrosives	H2S < 5 PPMV, NH4 < 10 PPMV, water vapor						
2.10	Notes	Combines with flow from ionization blower W-036 @ 4120 CFM						

Section 3 – System Requirements		
3.0	Flow Range	42,000 CFM @ 12 inWC, VFD control to low of 4 inWC @ same flow rate
3.1	Duty	Continuous
3.2	Suction Conditions	Ducted
3.3	Static Pressure Range	(-) 0 to (-) 9 inWC at suction inlet
3.4	Static Discharge P	12 inWC max
3.6	Dynamic Losses from Inline Equipment	Allow for 12 inWC total SP. Estimated total pressure drop is 7 inWC when bed is fouled. See head loss calculation sheet.
3.7	Dynamic Losses Duct and Fittings	Included in 3.6.
3.8	Expected max system pressure at req. flow	7 inWC
3.9	Detailed Head Loss Calculation Completed?	Yes. See “activated carbon bed sizing calcs”, attached.

Section 4 - Blower Data					
4.0	Type	Backward Inclined. Single width	4.1	Impeller Dia.	44 inch nom.
4.2	Mfg.	New York Blower	4.3	Model No.	SWSI size44 cl. 3
4.4	Drive	Belt, provide guard			
4.5	Sheave Ratio	~1.25	4.6	RPM @ 60 Hz	1445
4.7	Flow @ 60 Hz	42,000 CFM air @ 12 inWC			

4.8	Suction Flange	48 in RD. see dim. page	4.9	Discharge Flange	Rect., bolt flange. ~48 x 34, see dim. page
4.10	Weight	5500 lbs	4.11	base dim	109 x 72
4.12	Height	96 with base			
4.9	Notes:	Arrangement 1, unitary base. CCW rotation from driven side. Motor position "W", blower outlet, top horizontal (TH)			

Section 5 - Motor Data					
5.0	Motor HP	125	5.1	Frame	444T
5.2	RPM	1800	5.3	Voltage	3-ph 460
5.4	SF	1.15	5.5	Duty	Continuous
5.6	Eff.	IE4	5.7	X-proof	Not required / installed outdoors
5.8	Encl.	TEFC	5.9	Mfg.	Baldor is preferred

Section 6 – Flow Range				
CFM	**SP**	**RPM**	**Hz**	**BHP**
42,000	12 inWC	1445	60	<100HP
Notes	Blower will normally will operate near flow set-point, but pressure range is expected to start below 5 inWC when the carbon bed is new and climb to over 7 when fouled. Will need to balance with supply side blowers. Building exhaust fans W-034ab, and ionizer reactor blower, W-036.			

The New York Blower Company
Fan-to-Size
Fan Selection Detail

W-038 - primary exhaust fan capable of 42,120 CFM @ 12 inWC expected op. range: 42,120 CFM between 5 and 7 inWC

125 HP motor, 1800 RPM. Operate on VFD.

Fan Design

Product:	Backward Inclined SWSI
Type:	Backward-Inclined
Size:	44
Fan Class:	3
Wheel Type:	Backward Inclined (airfoil: ACF/ECF) - ACF
Wheel Material:	Carbon Steel
Wheel Weight:	358.0 lb
Wheel WR²:	597 lb-ft2
Percent Width:	100%
Percent Diameter:	100.0%
Outlet Area:	11.39 sq. ft.
Options:	Silencer(s): 1 long inlet

Axial thrust load is 1034.4 lbf.

Calculation Mode: Find Speed

Drive Type:	Belt
Arrangement:	1
Outlet Velocity:	3768 ft/min
Static Efficiency:	82.14%
Total Efficiency:	88.1%
Operating Temp:	70° F
Maximum Temp:	100° F
Maximum Speed: (1)	1486 RPM
Velocity Pressure:	0.867 in wg
Fan Static Pressure:	12 in wg
Fan Total Pressure:	12.9 in wg
Altitude:	600 ft

Conditions (Standard Volume; Fan Static Pressure)

	Flow	Pressure	Power	Speed	Speed Limit (2)	Density	Altitude	Inlet Temp.
	SCFM	in wg (FSP)	bhp	rpm	rpm	lb/ft3	ft	f
Operating	42000	12	98.8	1445	1495	0.0734	600	70
Cold	42000	13.5	111	1445	1495	0.0828	600	10
Standard	42000	12.3	101	1445	1495	0.0750	0	70

(1) Speed Limit at Maximum Temperature (2) Speed Limit at indicated Inlet Temperature

My Sales Representative

Air McClure Co.
19111 Detroit Rd Suite 307 Rocky River, OH 44116, USA
(P) 440.356.7332, (F) 440.356.9339
nyb@airmcclure.com

The New York Blower Company certifies that the Backward Inclined SWSI fan is licensed to bear the AMCA Air Performance Seal. The ratings shown are based on tests and procedures performed in accordance with AMCA Publication 211 and comply with the requirements of the AMCA Certified Ratings program. AMCA Licensed for Air Performance without Appurtenances (Accessories). Power HP (bhp) excludes drives. The data presented is not certified, and was modified from AMCA licensed performance data. It was modified to account for ** Silencer **, which were not included in the licensed ratings. This modified performance is not AMCA licensed but is provided to aid in selection and application of the product. Performance certified is for installation type: B - free inlet, ducted outlet.

Copyright 2016-2019 New York Blower

use a silencer on the exhaust stack

Sound Power Level Ratings

Sound power and sound pressure levels are shown in decibels. (Power levels reference 10-12 watts and pressure levels reference 2x10-7 microbar.) Sound power ratings are calculated per AMCA Standard 301. Ratings do not include the effects of duct end correction. Sound levels do not include motors or drives. Pressure levels are estimated. A-weighing is per ANSI S.1.42-2001 (R2011).

Fan Sound (Silencer(s): 1 long inlet)

Center Freq (Hz)	63	125	250	500	1000	2000	4000	8000	Overall
Octave	1	2	3	4	5	6	7	8	
Inlet Total Power, dB	102	107	112	99	97	93	88	88	**114**
Inlet Silencer	-6	-11	-17	-26	-29	-23	-17	-14	
A-Weighting	-26.2	-16.1	-8.6	-3.2	0	1.2	1	-1.1	
Convert To Pressure	-17.5	-17.5	-17.5	-17.5	-17.5	-17.5	-17.5	-17.5	
Inlet Total Pressure, dBA	53	63	69	52	51	54	55	56	**71**
Outlet Total Power, dB	102	107	112	99	97	93	88	88	**114**
A-Weighting	-26.2	-16.1	-8.6	-3.2	0	1.2	1	-1.1	
Convert To Pressure	-17.5	-17.5	-17.5	-17.5	-17.5	-17.5	-17.5	-17.5	
Outlet Total Pressure, dBA	59	74	86	78	80	77	72	70	**88**
Fan Total Power, dB	105	110	115	102	100	96	91	91	**117**
Housing Radiated Noise	-7	-11	-16	-18	-15	-15	-16	-17	
A-Weighting	-26.2	-16.1	-8.6	-3.2	0	1.2	1	-1.1	
Convert To Pressure	-17.5	-17.5	-17.5	-17.5	-17.5	-17.5	-17.5	-17.5	
Fan Total Pressure, dBA	55	66	73	63	68	65	59	56	**76**

Directivity/Reflection is a hemispherical radiation (Q = 2); Distance is 10 ft.
At 10 ft, the estimated sound pressure level:

1. at silencer inlet is 71 dBA.
2. outside the fan due to an open outlet is 88 dBA.
3. housing radiated noise when inlet and outlet are ducted away from listening point is 76 dBA.

The sound power and pressure levels displayed here are estimated values based on tests and ratings conducted in accordance with AMCA standards 300 and 301. AMCA does not certify any of these ratings.

Copyright 2016-2019 New York Blower

The New York Blower Company
Fan-to-Size
Fan Selection Detail

125 HP motor, 1800 RPM. Operate on VFD.

% SPD	RPM	Hz
100%	1445	60
90%	1301	54
85%	1228	51
80%	1156	48

Product: Backward Inclined SWSI
Material: Carbon Steel
Fan Size: 44, Fan Class: 3
Arrangement: 1
Wheel Type: Backward Inclined (airfoil: ACF/ECF) - ACF
Options: Silencer(s): 1 long inlet

Standard Volume Flow Rate: 42000 SCFM
Fan Static Pressure: 12 in wg
Speed: 1445 rpm
Power: 98.8 bhp

Inlet Temperature: 70 °f
Altitude: 600 ft
Density: 0.0734 lb/ft3
Outlet Velocity: 3768 ft/min

Additional fan speeds shown: 1300 RPM, 1228 RPM, 1156 RPM.

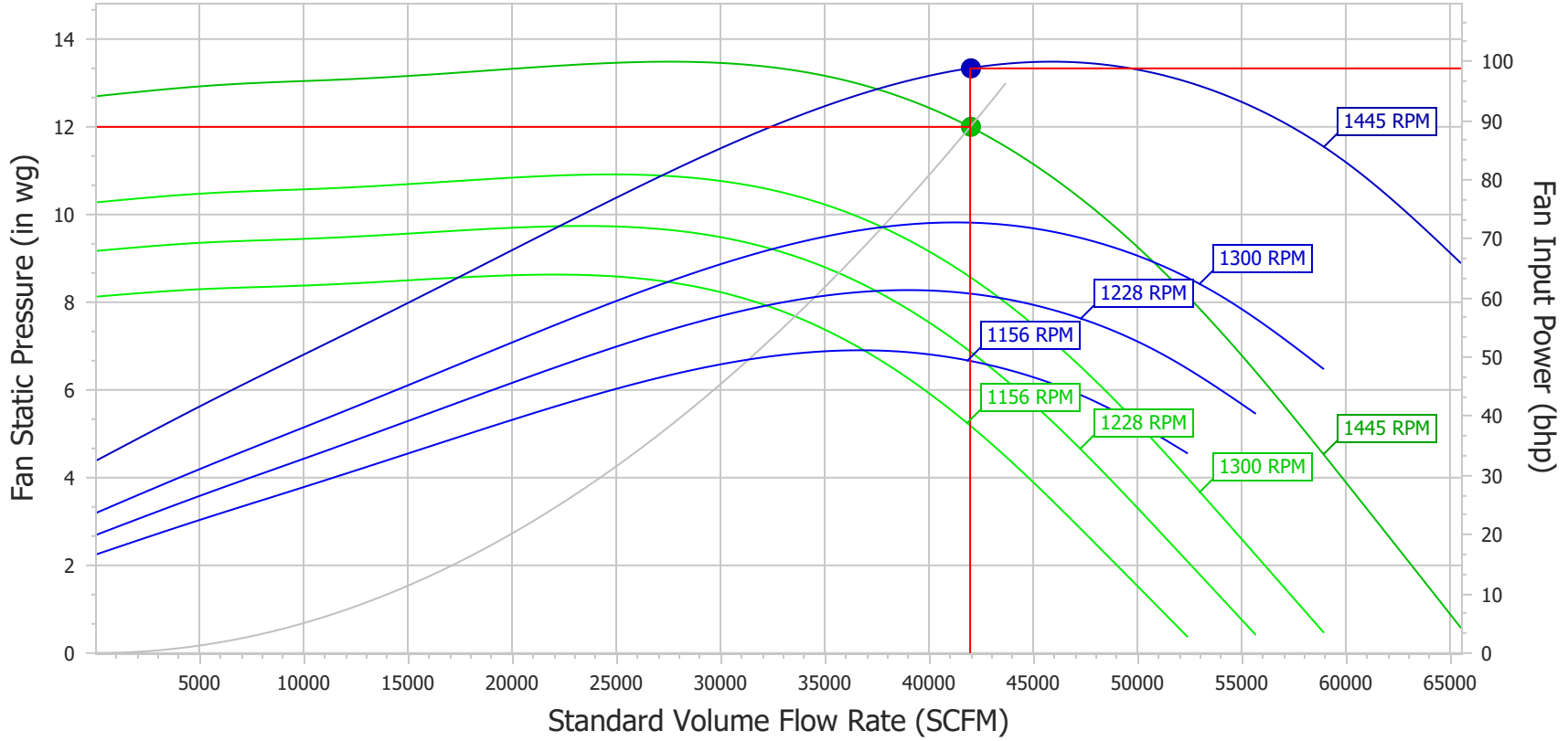

AMCA Licensed for Air Performance without Appurtenances (Accessories). Power HP (bhp) excludes drives. The data presented is not certified, and was modified from AMCA licensed performance data. It was modified to account for ** Silencer **, which were not included in the licensed ratings. This modified performance is not AMCA licensed but is provided to aid in selection and application of the product. Performance certified is for installation type: B - free inlet, ducted outlet.

Copyright 2016-2019 New York Blower

SPECIFYING SINGLE-WIDTH ACOUSTAFOIL FANS

GENERAL

The fans shall be size 44 single-width single-inlet capable of operating over the entire range in accordance with the equipment schedule and as defined in AMCA Standard 99-2408 as designed and manufactured by The New York Blower Company. Fan wheels shall utilize non-overloading airfoil blades in all sizes. Unless otherwise directed, fans shall be in compliance with the layout shown on the drawings.

PERFORMANCE

Fan ratings shall be based on tests made in accordance with AMCA Standard 210 and licensed to bear the AMCA Certified Ratings Seal for Air Performance. Fans not licensed to bear the AMCA Seal for performance shall be tested, at supplier's expense, in an AMCA Registered Laboratory. (Option: Only AMCA certified fans will be accepted.) Fans shall have a sharply rising pressure characteristic extending throughout the operating range to assure quiet and stable operation under all conditions from wide open to closed off. Fan brake horsepower shall be equal to or less than 98.8 bhp at 12 in wg static pressure and 42000 cfm at 0.0734 lb/ft3 density.

SOUND

Fan manufacturers shall provide sound power level ratings for fans tested and rated in accordance with AMCA Standards 300 and 301. Sound power ratings shall be in decibels (reference 10-12 watts) in eight octave bands. Sound power levels will be corrected for installation by the specifying engineer...dBA levels only are not acceptable.

CONSTRUCTION

Fan housings are to be heavy gauge, continuously welded construction. Housings with lock seams or partially welded construction are not acceptable. Housings are to be reinforced with rigid bracing to increase structural integrity and prevent vibration. Housing inlet cones shall be aerodynamically designed and spun providing a minimum separation of air flow. Wheel diameters and outlet areas shall be in accordance with the standard dimensions adopted by AMCA for centrifugal fans. Designs not in accordance with AMCA Standard 99-2401 are not acceptable.

BEARINGS

Bearings are to be heavy duty, grease lubricated, precision anti-friction ball or spherical roller, self-aligning, pillow block design. Bearings shall be designed for a minimum L-10 life of 40,000 hours (200,000 hour L-50 life) when rated at the fan's maximum cataloged operating speed. (Optional: bearings to have minimum L-10 life of 250,000 hours.)

SHAFT

Shafts are to be ASTM A-108 steel, grade 1040/1045, precision turned, ground and polished. Grade 1018 steel is not acceptable. The shaft's first critical speed shall be at least 125% of the fan's maximum operating speed. The drive end of the fan shaft shall be counter-sunk for tachometer readings.

PAINT

All fan surfaces are to be thoroughly prepared prior to painting using a combination of washing and hand and power tool cleaning as required. After cleaning, all surfaces are to be coated with an industrial grade alkyd enamel. Surfaces of bolted components not accessible after assembly shall be coated and allowed to dry prior to final assembly. Primer only will not be accepted.

BALANCE AND RUN TEST

All fan wheels shall be dynamically balanced on precision balancers. Prior to shipment, completed fans shall receive a final test balance at the specified operating speed.

Copyright 2016-2019 New York Blower

ACCESSORIES

Accessories shall be provided as in the plans and specifications.
Required accessories include (select appropriate items):

__X__ Cleanout Door:
- ___ Quick Opening
- ___ Flush Bolted
- __X__ Raised Bolted

___ Spark-Resistant Construction:
- ___ Airstream Type
- ___ Wheel Type
- ___ Buffer Type

___ Drain
__X__ Drain Plug
___ Split Housing (non-rotatable fans only)
__X__ Flanged Outlet
___ Outlet Companion Flange
___ Shaft Seal:
- ___ Ceramic Felt
- ___ Buna-N
- ___ Viton®
- ___ Teflon®

__X__ Flanged Inlet
___ Inlet Companion Flange
___ Inlet-Vane Damper:
- ___ Internal
- ___ External

___ Heat-Fan Construction
___ Heavy-Duty Slide Rails (Arrangement 9 only)
___ Outlet Damper:
- ___ Parallel Blade
- ___ Opposed Blade

___ Safety Equipment:
- __X__ Belt Guard with Tachometer Opening and Plug
- ___ Shaft and Bearing Guard with Extended Bearing Lubrication Fittings
- ___ Inlet Guard
- ___ Outlet Guard

__X__ Unitary Base
___ Isolation Base:
- ___ Spring
- ___ Rubber-In-Shear

__X__ V-Belt Drive:
- ___ Adjustable
- __X__ Constant

___ Flexible Coupling

FINAL INSPECTION

All fans shall receive a final inspection by a qualified inspector prior to shipment. Inspection to include: fan description and accessories, balance, welding, dimensions, bearings, duct and base connection points, paint finish and overall workmanship.

Viton and Teflon are registered trademarks of DuPont Dow Elastomers and DuPont respectively.

Copyright 2016-2019 New York Blower

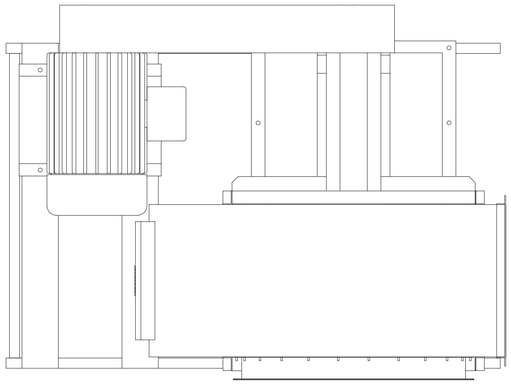

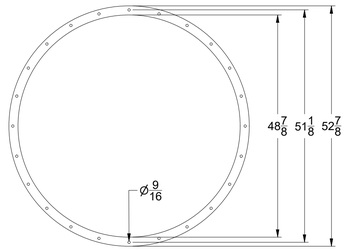

INLET FLANGE

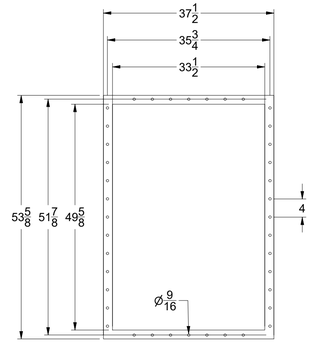

OUTLET FLANGE

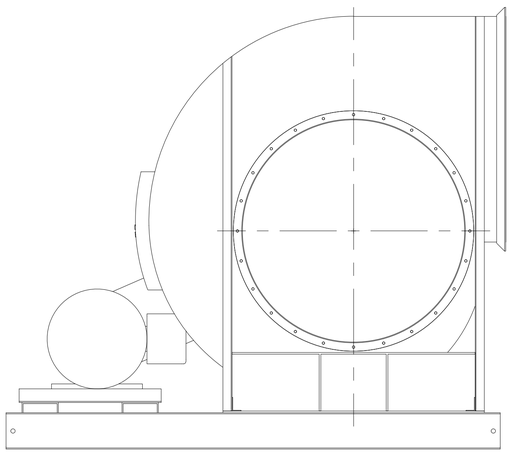

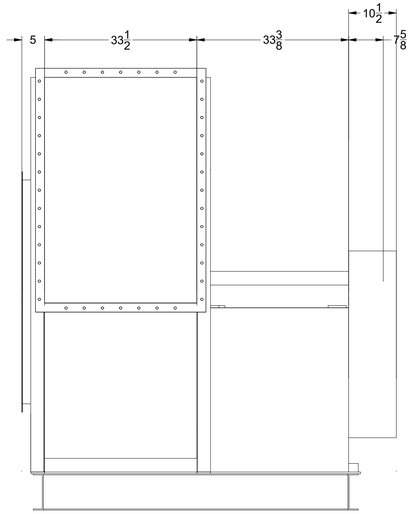

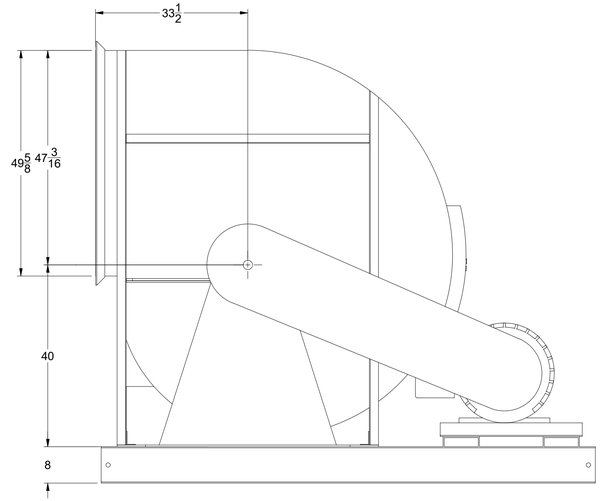

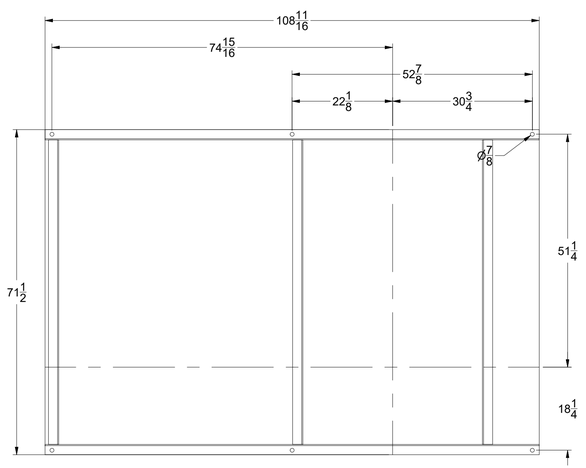

EST FAN SHIPPING WEIGHT 5501#
EST SHIPPING DIM 138 W X 106 L X 109 H

CUSTOMER
CUSTOMER'S NO.
FILE NO. DOD189673
TAGGING

NOTICE: This drawing is the property of THE NEW YORK BLOWER CO. and is loaned subject to the condition that it shall not be reproduced, copied, loaned or submitted to outside parties without our consent.

44 BACKWARD INCLINED SWSI
CLASS III CCW TH
Arrangement 1
Motor Pos W

PROPOSAL DRAWING ONLY

DRAWN DOD | DATE 10/16/2021

nyb THE NEW YORK BLOWER COMPANY
7660 Quincy Street
Willowbrook, IL 60527-6530
Visit us on the Web: http://www.nyb.com
Phone: (800) 208-7918 Email: nyb@nyb.com

DRAWING NUMBER
DOD189673

Appendix B: ODOR CONTROL PLAN

Carbon Bed Sizing Calculations

Prepared By
Green Arrow Engineering
2759 Long Road
Wooster, OH 44691

REVISION LEVEL	DESCRIPTION	ISSUE DATE
R0	INITIAL RELEASE	10/19/21

EQ# **Green Era** **Activated Carbon Bed** T-038 **Prepared by Ned Mast**
Sizing calculations **last revised: 10/17/2021**

Calculate critical design parameters for the building exhaust carbon bed

Type: Vertical deep bed
Use 40-ft high cube container
Carbon type: Calgon Carbon Minotaur OC, 4mm pellet

Results Summary

	Total airflow to carbon bed	42,120	CFM	from eq. 3
	Empty Bed Capacity	879	CF	from eq. 6
	(vol. of carbon)	32.6	CY	
	Air residence time / empty bed contact time			
		1.25	s	from eq. 5
	Breakthrough time for H2S			
1.	highest predicted loading	5,838	h	from eq. 12
2.	expected loading	54,876	h	from eq. 13

1. Loading to the carbon bed if ionizers do not reduce the odorant concentration
2. Loading to the carbon bed if ionizers provide 75% reduction to the odorant loading at each treatment zone

Pressure drop across carbon bed			
loose packed	2.07	inWC	from eq. 7
dense pack (fouled)	4.64	inWC	from eq. 8
Total pressure drop			
blower W-038	6.78	inWC	from eq. 47

Determine carbon holding capacity

	determine face area per bed										
1	8.833	ft	x	30.0	ft	=	265	SF			
	inside height			bed length			filtration bed area per side				
	calc. total filter bed face area										
2	265	SF	x	2	beds	=	530	SF			
	from eq. 1										
	Calc. total airflow to filter										
3	38,000	CFM	+	4120	CFM	=	42,120	CFM			
	bldg. ventilation rate			ionization reactor flow							
	Airflow face velocity										
4	42,120	CFM	/	530	SF	=	79.5	FPM			
	from eq. 3			from eq. 2			1.3	FPS			
	Calc. the average contact time										
5	1.66	ft	/	1.3	FPS	=	1.25	seconds			
	19.9	inches					from eq. 4				
	0.5	meters									
	bed depth										
	Bed volume										
6	530	SF	x	1.66	ft	=	879	CF			
	from eq. 2			from eq. 5			32.6	CY			
	Calculate pressure loss through the bed, new condition										
7	1.66	ft	x	1.25	inWC/ft @ 80 FPS	=	2.07	inWC			
	from eq. 5			Calgon Carbon data sheet, loose fill							
	Calculate pressure loss through the bed, fouled										
8	1.66	ft	x	2.8	inWC/ft @ 80 FPS	=	4.64	inWC			
	from eq. 5			Calgon Carbon data sheet, packed							
	H2S capacity in lbs/CF										
9	300	kg/m3	x	2.204	lbs/kg	/	35.3	ft/m3	=	18.73	lbs H2S/CF
	Calgon Carbon data sheet										
	Total theoretical bed capacity										
10	18.73	lbs H2S/CF	x	879	CF	=	16,463	lbs H2S			
	from eq. 9			from eq. 6							
	Calculate 50% holding capacity for breakthrough point										
11	16,463	lbs H2S	x	50%		=	8,231	lbs H2S			
	from eq. 10										
	Calculate hours to 50% saturation at highest avg. loading.										
	Assumes ionizers have no reduction.										
12	8,231	lbs H2S	/	1.41	lbs H2S/h	=	5,838	hours			
	from eq. 11			see loading table							
	Calculate hours to 50% saturation at predicted avg. loading.										
	Assumes ionizers are effective in reducing odorant levels by 75%										
13	8,231	lbs H2S	/	0.15	lbs H2S/h	=	54,876	hours			
	from eq. 12			see loading table			6.26	years			

Calculate blower total static pressure requirement

The building exhaust fans (W-034AB) and the ionization reactor blower (W-036) have enough SP capacity to deliver the primary air flow with slight positive pressure ahead of the carbon bed inlet. This can be controlled to between 0 and 1 inWC.

Confirm the expected pressure drop at the entrance to the carbon bed and through the center plenum area between the carbon beds.

Plenum area

14 | 24 inches (width between beds) | x | 106 inches (height) | = | 2544 in2 / 17.67 SF

Airflow velocity through plenum

15 | 42,120 CFM (from eq. 3) | / | 17.67 SF (from eq. 14) | = | 2,384 FPM / 40 FPS

16 Determine velocity pressure to estimate the entrance loss for turning the airflow
p[v] = (v/4005)^2 where v is in FPM and p[v] is in inWC
assume loss is equivalent to a flanged pipe

velocity pressure

17 (2,384 FPM (from eq. 15) / 4005) ^ 2 = 0.35 inWC

entrance loss, h[I,1]

18 | 0.35 inWC (from eq. 17) | x | 50% loss factor for flanged pipe | = | 0.18 inWC

ASHRAE hydraulic dia. for center plenum

D[e] = $1.3 \times (a \times b)^{0.625} / (a + b)^{0.25}$
a = 24 in
b = 106 in

19 d[e] = 51.7 in

Duct pressure loss through center plenum

$\Delta h = 0.109136\, q^{1.9} / d_e^{5.02}$ where Δh is the inWC loss per 100ft of duct

20 q = 42,120 CFM from eq. 3

21 d[e] = 51.7 in from eq. 19

22 h = 0.17 inWC per 100 ft of duct

L[eq] calculate total equivalent length including 90 deg. turn

23 | 30 ft (Length of the plenum area is 30-fe) | + | 100 ft (L[eq] for 90, assumed) | = | 130 ft

h[I,2]

24 | 0.17 inWC drop per 100-ft | x | 130 ft (from eq. 23) | / | 100 ft | = 0.22 inWC (expected loss in center plenum)

total loss from entrance of the carbon bed thru the plenum that W-036, W-034AB should overcome

25 | 0.18 h[I,1] from eq. 18 | + | 0.22 h[I,2] from eq. 24 | = | 0.39 inWC (expected total pressure loss prior to air entering the carbon bed from the outlet of W-036 duct)

Inlet side pressure losses for blower W-38

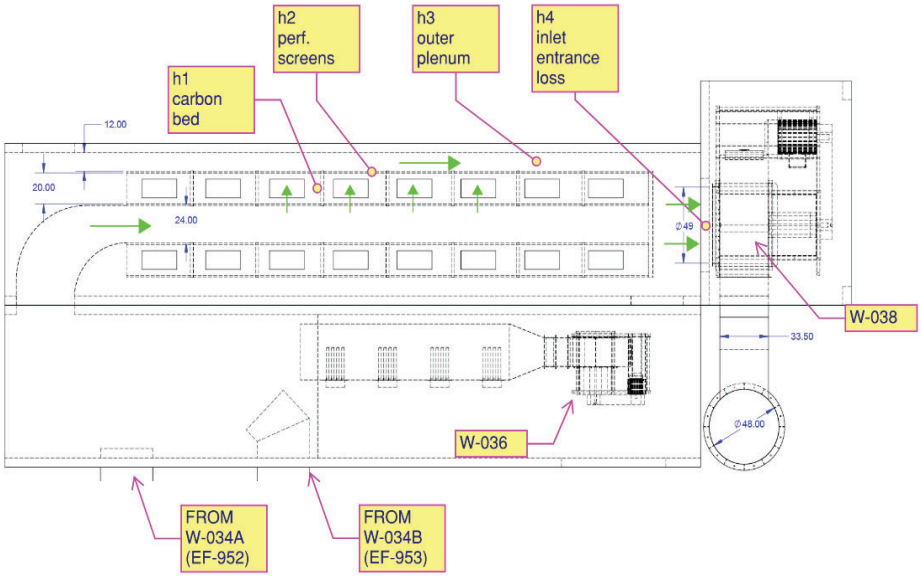

Calculate total head loss on the suction side of W-038
h[inlet] = h1 + h2 + h3 + h4
where
h1 - primary head loss from the air travel through the packed bed
h2 - friction head loss for the air passing through the perforated screens
h3 - friction head loss for the air through the outer plenum
h4 - entrance head loss to the blower

Determine pressure loss through outer plenum
ASHRAE hydraulic dia. for center plenum

	D[e]	=	$1.3 \times (a \times b)^{0.625} / (a+b)^{0.25}$	
	a	=	12	in
	b	=	106	in
25	d[e]	=	34.4	in

Duct pressure loss through outer plenum. Each side.
$\Delta h = 0.109136\, q^{1.9} / d_e^{5.02}$ where Δh is the inWC loss per 100ft of duct

Flow is assumed to split equally bewteen sides.

26	q	=	21,060	CFM	half of flow from eq. 3
27	d[e]	=	34.4	in	from eq. 25
28	h	=	0.35	inWC per 100 ft of duct	

L[eq] calculate total equivalent length including direction change

29	30	ft	+	93	ft	=	123	ft

Length of the plenum area is 30-fe L[eq] for direction change from end screen assumed as equal to loss for 36-in 90 ell

h3

30	0.35	x	123	ft	/	100	ft	=	0.43 inWC
	inWC drop per 100-ft		from eq. 29						expected loss in outer plenum

Determine pressure drop through perforated metal screens. Each side is screened with perforated metal that has 1/8-in holes on 3/16-in spacing with 40% open area. The perforated metal manufacturer handbook provides a chart below by open area and air velocity. The face velocity at the screens is less than 80 FPM (eq. 4). Per the graph below, it is apparent that losses for air speeds below 500 FPM are minor <0.1 inWC for screens with 40% or greater open area.

Accessed 10/15/21
http://www.iperf.org/files/6213/9267/1671/IPA_Perforated_Metals_Handbook.pdf

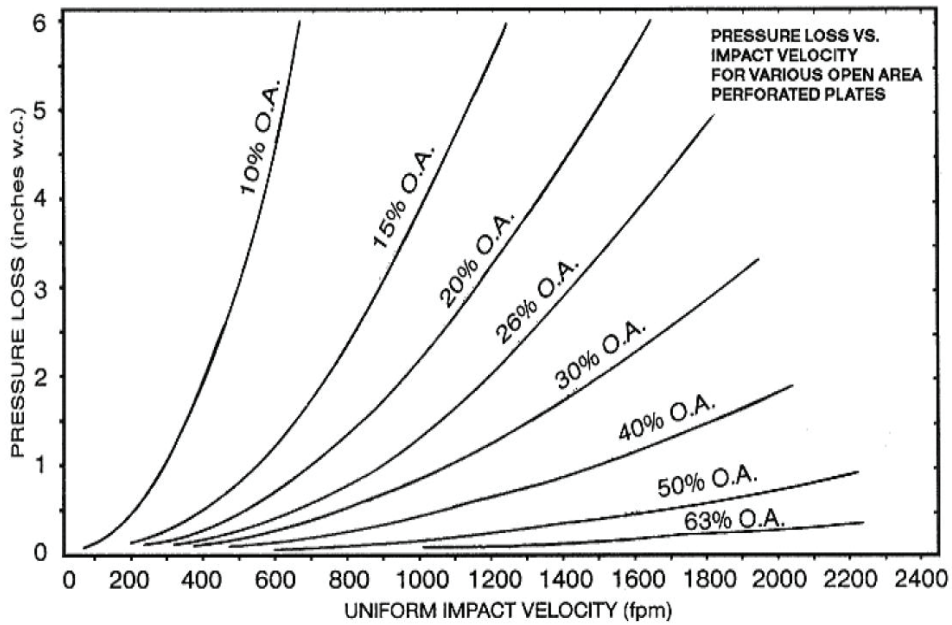

Expected loss through perf. Screens
Assume a loss for the air flow through two perf. Screen panels

31	h2			=	0.15	inWC				

inlet transition loss at blower
assume a flanged inlet without relief from the end of the container into the fan
a conservative entrance loss is 50% of the velocity pressure

p[v] = (v/4005)^2 where v is in FPM and p[v] is in inWC
the blower inlet is 48-inches

duct area

32	2	ft	^	2		x	3.14	=	12.56	ft2
	radius						(pi)			

fan inlet velocity

33	42,120	CFM	/	12.56	ft	=	3,354	FPM		
	from eq. 3			from eq. 32						

velocity pressure

34	(3,354	FPM	/	4005	)	^	2	=	0.70	inWC
	from eq. 33									

entrance loss, h4

35	0.70	inWC	x	50%	loss factor for flanged pipe	=	0.35	inWC		
	from eq. 34									

	h1	(carbon bed)	=	4.64	from eq. 8	assumes fouled condition
	h2	(perf. Screen)	=	0.15	from eq. 31	
	h3	(outer plenum)	=	0.43	from eq. 30	
	h4	(fan entrance)	=	0.35	from eq. 35	
			+			
36	h[inlet]			**5.57**	inWC	pressure loss to blower inlet W-038

Calculate Outlet Losses from Blower W-038

Calculate total head loss on the discharge side of W-038
h[outlet] = h5 + h6 + h7
h5 - outlet loss through 45 deg. transition in rectangular duct
h6 - friction loss through stack
h7 - stackhead loss

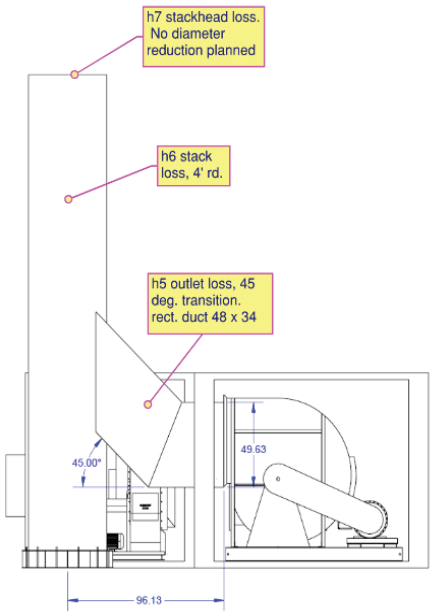

ASHRAE hydraulic dia. for outlet duct

	D[e]	=	$1.3 \times (a \times b)^{0.625} / (a + b)^{0.25}$		
	a	=	34	in	
	b	=	48	in	
37	d[e]	=	44.0	in	

Duct pressure loss through discharge.
$\Delta h = 0.109136\, q^{1.9} / d_e^{5.02}$ where Δh is the inWC loss per 100ft of duct

Flow is assumed to split equally bewteen sides.

38	q	=	42,120	CFM	from eq. 3
39	d[e]	=	44.0	in	from eq. 37
40	h	=	0.38	inWC per 100 ft of duct	

L[eq] calculate total equivalent length including direction change

41	12	ft	+	105	ft	=	117	ft

Assume total lg of 12' to stack and use eq. lg for a 40-in rd duct 90 with a 1.5R turn.

h5

42	0.38		x	117	ft	/	100	ft	= 0.44 inWC
	inWC drop per 100-ft			from eq. 41					expected loss from blower outlet into the stack

Loss in 48-inch stack

43	h	=	0.24	inWC per 100 ft of 48-in round duct	

h6

44	0.24		x	30	ft	/	100	ft	= 0.07 inWC
	inWC drop per 100-ft								expected loss from blower outlet into the stack

h7 - stackhead loss = velocity pressure for a 48-inch round duct

45	0.70	inWC
	calculated above, see eq. 34	

	h5 (outlet loss)	=	0.44	from eq. 42
	h6 (stack)	=	0.07	from eq. 44
	h7 (stack head)	=	0.70	from eq. 45
		+		
46	h[outlet]	=	1.21	inWC

	h[total]							
	inlet loss			outlet loss				
47	5.57	inWC	+	1.21	inWC	=	6.78	inWC
	from eq. 36			from eq. 46				

Blower W-038 has sufficient HP to produce up to 12 inWC at the flowrate of 42,000 CFM. The blower motor will be powered by a variable frequency drive and will allow the impeller speed to be modulated to meet the flow requirement. This provides a wide operating band for changing system conditions and maintains good power efficiency.

Appendix C: ODOR CONTROL PLAN

Reference Drawings

Prepared By
Green Arrow Engineering
2759 Long Road
Wooster, OH 44691

REVISION LEVEL	DESCRIPTION	ISSUE DATE
R0	INITIAL RELEASE	10/19/21

Process Flow and Mass Balance	
Ventilation and odor control	1512-0500-001
Ionization Reactor and Carbon Bed	1512-0500-002

Process and Instrumentation Drawings (P&IDs)	
Process HVAC MAUs	1512-1030-001
Process HVAC Building Ionizers	1512-1032-001
Process HVAC Exhaust Blowers	1512-1034-001
Process HVAC Exhaust Ionizers (Ionization Reactor)	1512-1036-001
Process HVAC Carbon Bed	1512-1038-001

Base building mechanical drawings	
HVAC Notes and Specs (general)	M-700
HVAC Notes and Specs (piping)	M-702
HVAC Notes and Specs (piping)	M-703
HVAC Notes and Specs (equipment)	M-704
HVAC Notes and Specs (equipment)	M-705
HVAC Notes and Specs (equipment)	M-706
HVAC Schedules	M-710
HVAC Schedules	M-711
Building Ventilation Schematic	M-720
HVAC Equipment Locations	M-800
Duct Plan – Center Rooms	M-811
Duct Plan – Mechanical Room and Elec. Rm 2	M-812
Duct Plan – Process Area	M-813
HVAC Elevations	M-820
HVAC Elevations	M-821

VENTILATED AREA	Air pretreated with ionizers	FLOW RATE	NH3			H2S		
		SCFM	*PPMV*	*mg/m3*	*LBS/HR*	*PPMV*	*mg/m3*	*LBS/HR*
FEEDSTOCK RECEIVING AREA	Yes	16,500	9	6.4	0.396	4	5.7	0.352
SEPARATION MILL & GRIT TANK	No	1,000	10	7.1	0.027	10	14.2	0.053
LIQUID RECEIVING TANKS	No	1,000	10	7.1	0.027	20	28.5	0.107
SCREENED DIGESTATE TANKS	No	500	100	71.3	0.134	30	42.7	0.080
DEWATERING AREA	Yes	17,750	16	11.4	0.758	8	11.4	0.757
FILTRATE TANKS	No	1,250	10	7.1	0.033	10	14.2	0.067
SCRUBBER TOTAL INLET	**untreated**	38,000	13.6	9.7	1.38	6.987	9.9	1.41
CARBON BED INLET W/DIULTION		42,120	12.2	8.7	1.38	6.303	9.0	1.41

			PPMV	*mg/m3*	*LBS/HR*	*PPMV*	*mg/m3*	*LBS/HR*
PRETREATED lbs/h					1.15			1.11
UNTREATED lbs/h					0.220			0.306
AFTER 75% REDUCTION	75%				0.29			0.28
TOTAL TO IONIZER CANON		42,120	4.5	3.2	0.51	2.6	3.7	0.58
CARBON BED INLET		42,120	1.1	0.8	0.13	0.6	0.9	0.15
CARBON BED OUTLET	99.0%	42,120	0.011	0.01	0.0013	0.006	0.01	0.0015

Building volume

L	275	ft
W	125	ft
H	40	ft
V	1,375,000	FT3
Exhaust flow rate	38,000	CFM
Exhaust flow rate	2,280,000	CFH
Air Changes per hour	1.7	ACH

NOTES:

1. THIS IS A NEW FACILITY AND ODORANT CONCENTRATIONS ARE ESTIMATED. AMMONIA AND H2S WILL PRIMARILY OFF-GAS FROM THE DIGESTED SLUDGE AND BE PRESENT FROM THE DEWATERING OPERATIONS. AMMONIA AND H2S ARE USED AS THE INDICATOR GASES, BUT VARIOUS VOCS WILL ALSO BE PRESENT FROM FOOD WASTE HANDLING WITHIN THE FACILITY. THE VOCS WILL HAVE ODORS CHARACTERIZED AS SOUR, RANCID, YEASTY, FRUITY, AND/OR GRASSY ON A STANDARD ODOR WHEEL. THE VOC ODORS WILL BE CONCENTRATED AROUND THE FOOD WASTE RECEIVING BIN.
2. IONIZERS IN THE BUILDING ARE EXPECTED TO REDUCE ODORANT CONCENTRATIONS BY 75%, AS COMPARED WITH NO TREATMENT.
3. PROCESS EQUIPMENT AND BELOW-SLAB CONCRETE TANKS ARE DIRECTLY VENTED TO THE SCRUBBER PICK-UP DUCTS. IONIZED AIR FROM THE ROOM WILL PROVIDE MAKEUP AIR TO THE PROCESS EQUIPMENT AND TRANSFER TANKS, BUT NO REDUCTION IN ODOR CONCENTRATION FROM THE IONIZED MAKEUP AIR IS ASSUMED AS THE IONS WILL LIKELY HAVE LOST THEIR CHARGE PRIOR TO ENTERING THE PROCESS EQUIPMENT.
4. THE TWO PROCESSING FLOOR EXHASUT FANS DISCHARGE TO A MIXING PLENUM UPSTREAM OF AN ACTIVATED CARBON GUARD BED. THE EXHAUST FANS WILL TYPICALLY BOTH OPERATE AT 19,000 CFM EACH AND ARE SPEED CONTROLLED ON A VFD. IF ONLY DEWATERING OPERATIONS ARE OCCURING OR ONLY FEEDSTOCK PROCESSING, ONE EXHAUST MAY BE IDLED WHILE THE OTHER IS RAMPED UP TO FULL DESIGN CAPACITY. THE MAKE-UP AIR UNITS WILL BE CONTROLLED TO MAINTAIN A NEG. PRESSURE IN THE BUILDING BETWEEN -0.08 and -0.1 inWC. EACH MAU HAS THE CAPACITY (30,000 CFM) TO PROVIDE SUFFICIENT MAKE-UP AIR FOR BOTH EXHAUST FANS. THE PLANT OPERATIONS MAY CHOOSE TO ALTERNATE OPERATION OF THE MAUS OR RUN BOTH AT REDUCED FLOW AS INDICATED ON THE FLOW DIAGRAM. BOTH MAUS ARE SPEED CONTROLLED WITH A VFD. AFTER LEAVING THE BUILDING, THE EXHAUST AIR IS DUCTED TO AN IONIZATION REACTOR AND CARBON GUARD BED.
5. A 4,120 CFM BLOWER WILL SUPPLY OUTSIDE AIR ACROSS AN IONIZER REACTOR BANK THAT WILL COMBINE WITH THE 38,000 CFM OF ODOROUS AIR TO PROVIDE TERTIARY TREATMENT. THE ODORANT LEVELS ARE EXPECTED TO BE REDUCED BY ANOTHER 75% WITHIN THIS MIXING PLENUM. THE IONIZERS ARE SIZED TO HAVE FULLY TREATED THE AIR BY THIS STAGE. BUT THESE ARE FOLLOWED BY A CARBON GUARD BED FOR SURETY.
6. THE 42,120 CFM OF TREATED AIR WILL BE PULLED THROUGH AN ACTIVATED CARBON GUARD BED THAT WILL FURTHER REDUCE ODORANT LEVELS BY 99%. THE CARBON GUARD BED WILL BE UNDER SLIGHT NEGATIVE PRESSURE.
7. A MAIN EXHAUST BLOWER WILL PULL THE AIR THROUGH THE CARBON BED AND EXHUAST THE TREATED AIR TO A STACK.
8. IF THE IONIZERS ARE INOPERABLE FOR ANY PERIOD OF TIME, THE CARBON GUARD BED WILL BE RELIED ON TO REDUCE ALL ODORANT LEVELS.
9. THE CARBON GUARD BED WILL HAVE CAPACITY FOR 32 CY OF MEDIA, A BED DEPTH OF 20-INCHES (0.5 M) AND A CONTACT TIME OF 1.25 SECONDS.
10. THE CARBON GUARD BED WILL BE REGENEARTED (VOCS WILL BE OXIDIZED) BY THE IONIZED AIR DURING PERIODS OF LOW ODORANT LOADING FROM THE BUILDING. LOWER ODOR LEVELS ARE EXPECTED DURING OFF-SHIFT HOURS WHEN FEEDSTOCK HANDLING AND/OR DEWATERING OPERATIONS ARE NOT RUNNING. HYDROGEN SULFIDE WILL NOT BE REMOVED FROM THE CARBON BED AFTER CAPTURE SINCE IT IS CHEMICALLY BONDED WITH THE IMPREGENATED CARBON. IF THE IONIZERS DO NOT PROVIDE ANY REDUCTION IN THE H2S LEVELS, THE CARBON GUARD BED WILL REACH 50% OF ITS H2S HOLDING CACPAITY IN ABOUT 5500 HOURS. IF THE IONIZERS EFFECTIVELY REDUCE THE H2S LOADING AHEAD OF THE CARBON BED AS PREDICTED, THE CARBON BED WILL TAKE OVER 54,000 HOURS (6-YEARS) TO REACH 50% SATURATION. ACTIVATED CARBON BEDS ARE USED BY WASTEWATER TREATMENT PLANTS FOR PRIMARY ODOR CONTROL IN MANY INSTALLATIONS FOR BOTH HEADWORKS AND DEWATERING ODORS.
11. THE ACTIVATED CARBON BLEND SHALL BE SPECIFIED TO SCAVENGE HYDROGEN SULFIDE, AMMONIA, AND VOCs.

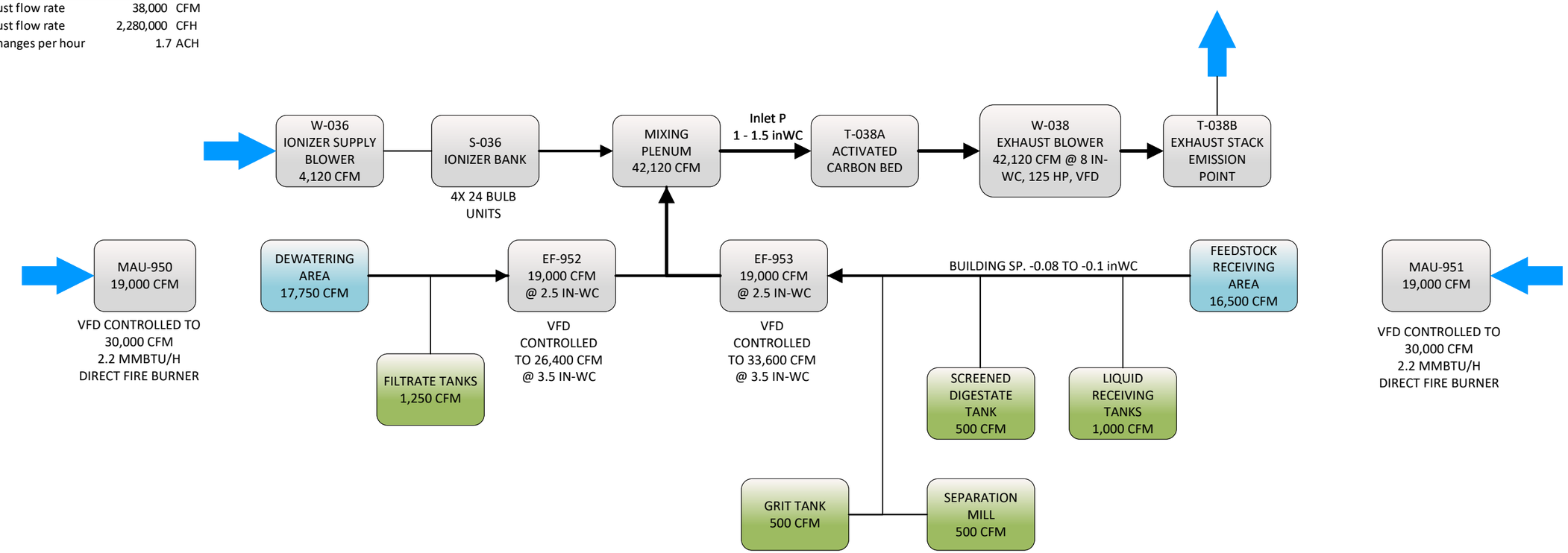

NO.	DATE
BY	
REVISION	
NO.	DATE
BY	
REVISION	
NO. A	DATE 10/15/21
BY NMAST	
REVISION REVISED FLOW RATES FOR CARBON BED	

GREEN ARROW

1680 MADISON AVENUE
WOOSTER, OH 44691

This drawing contains valuable confidential and proprietary information that belongs to Green Arrow ("GA"), and is subject to a Confidentiality and Nondisclosure Agreement. GA is the author and owner of this drawing, and retains all common law, statutory and other rights and privileges with respect hereto, including copyrights. The information contained herein may not at any time be used for any unauthorized purpose, nor reproduced by or provided to any third party, without the prior written consent of GA.

© 2017, Green Arrow.
All rights reserved.

VENTILATION AND ODOR CONTROL

AREA	CHECKED BY CH
JOB NO. 1512	DRAWN BY NM
SCALE N.T.S.	DATE 07/19/2021
DWG NO. 0500-001	
SHEET NO. 1	

C:\Users\nmast\Google Drive\Green Arrow\02 Projects\1512 Chicago - Feldman - Green Era\07 Drawings\01 PFD\

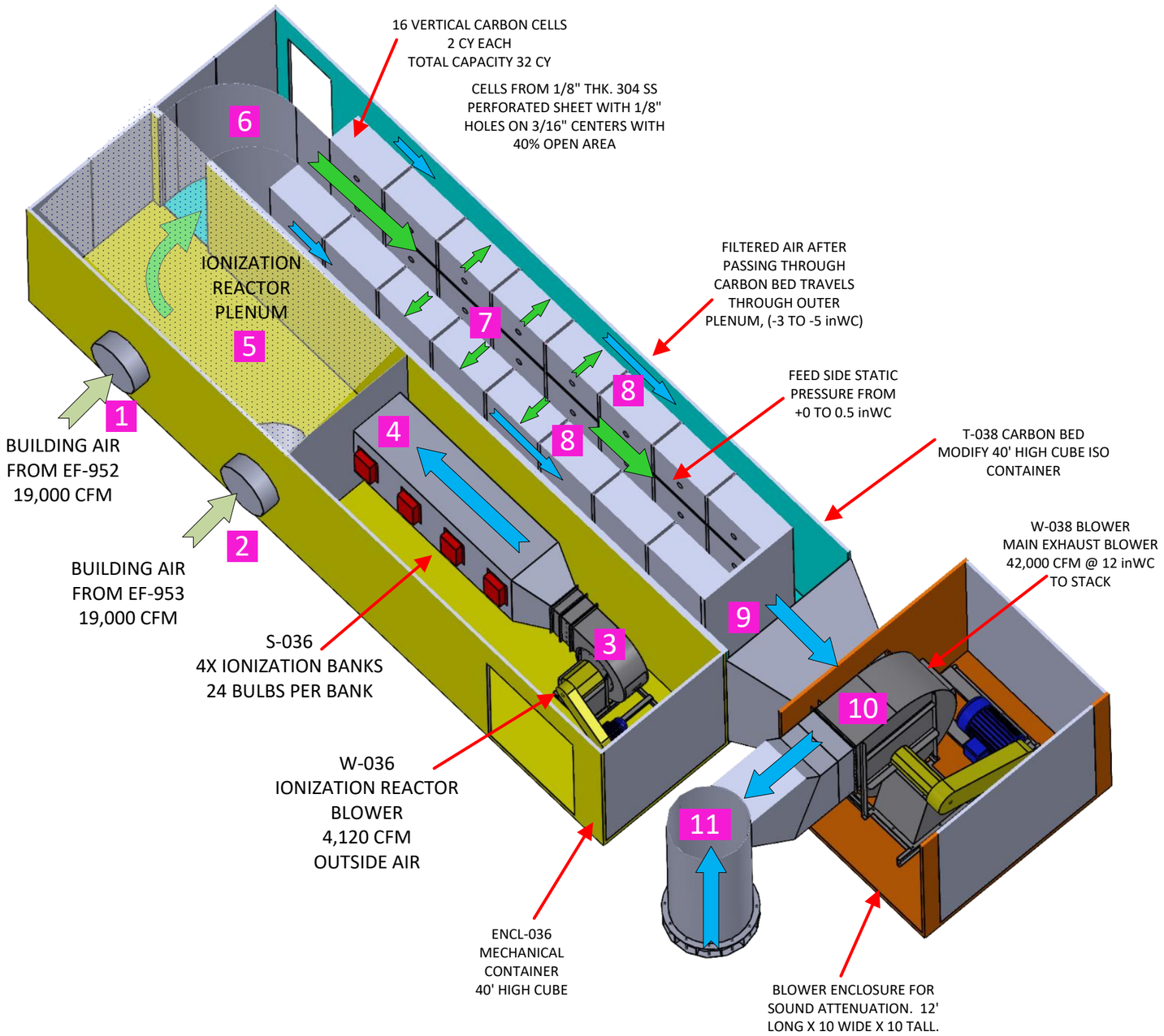

VIEW IS SECTIONED TO REMOVE CONTAINER ROOFS

NOTES

1. INLET DUCT FROM EF-952, W-034A, FROM DEWATERING AREA OF THE OPERATIONS BUILDING. BLOWER SPEED IS CONTROLED WITH A VFD.
2. INLET DUCT FROM EF-953, W-034B, FROM FEEDSTOCK PROCESSING AREA OF THE OPERATIONS BUILDING. BLOWER SPEED IS CONTROLED WITH A VFD.
3. BLOWER W-036, OUTDOOR AIR TO SUPPLY THE IONIZATION REACTOR (4120 CFM). BLOWER SPEED IS CONTROLED WITH A VFD.
4. IONIZER DUCT BANK. FOUR 24-BULB FIXTURES AND INTEGRATED POWER SUPPLIES. S-036.
5. PLENUM U-038, IONIZATION CONTACTOR FOR MIXING THE ODOROUS AIR FROM THE BUILDING WITH THE CHARGED AIR FROM W-036.
6. INLET TRANSITION PLENUM TO CARBON BED.
7. CENTER SUPPLY PLUNUM TO CARBON BED. STATIC PRESSURE RANGE FROM +0 TO +0.5 inWC.
8. VERTICAL DEEP CELL CARBON BED. 16 CELLS, EACH CELL HOLDS 2 CUBIC YARDS OF ACTIVATED CARBON. CARBON WILL BE PELLETIZED, 4MM STD. SIZE. BED DEPTH 20 INCHES (0.5M). NOMINAL EMPTY BED CONTACT TIME IS 1.25 SECONDS. CARBON CHANGE OUT FROM TOP ACCESS HATCHES.
9. SCRUBBED AIR EXITS BED AND TRAVELS ALONG OUTER PLENUM TO END OF THE CONTAINER TOWARD BLOWER INLET. NEGATIVE PRESSURE RANGE FROM -3 TO -5 inWC.
10. 42,000 CFM OF AIR ENTERS BLOWER W-038. W-038 HAS SUFFICIENT HP TO MAKE 12 inWC AT RATED FLOW. BLOWER SPEED IS CONTROLED WITH A VFD.
11. EXHAUST STACK WITH SILENCER TO ENVIRONMENT. H2S READING WILL BE MADE AT THE EXHAUST STACK TO MONITOR FOR BED BREAKTHROUGH.

NO.	DATE
BY	
REVISION	
NO.	DATE
BY	
REVISION	
NO.	DATE
BY	
REVISION	

GREEN ARROW

1680 MADISON AVENUE
WOOSTER, OH 44691

This drawing contains valuable confidential and proprietary information that belongs to Green Arrow ("GA"), and is subject to a Confidentiality and Nondisclosure Agreement. GA is the author and owner of this drawing, and retains all common law, statutory and other rights and privileges with respect hereto, including copyrights. The information contained herein may not at any time be used for any unauthorized purpose, nor reproduced by or provided to any third party, without the prior written consent of GA.

© 2017, Green Arrow.
All rights reserved.

IONIZATION REACTOR AND CARBON BED

AREA	CHECKED BY
	CH
JOB NO.	DRAWN BY
1512	NM
SCALE	DATE
N.T.S.	10/19/21

DWG NO. 0500-002

SHEET NO. 2

C:\Users\nmast\Google Drive\Green Arrow\02 Projects\1512 Chicago - Feldman - Green Era\07 Drawings\01 PFD\

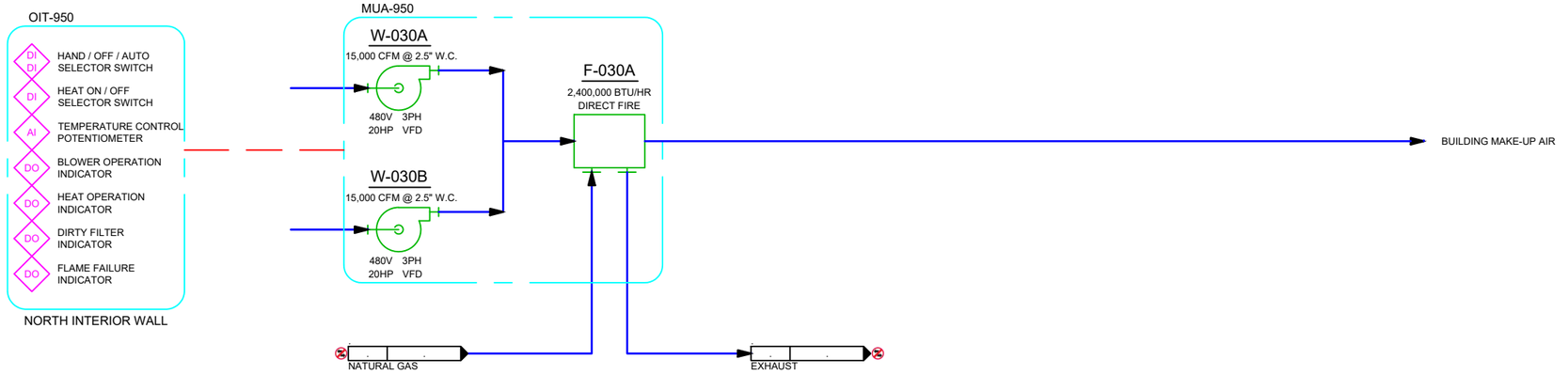

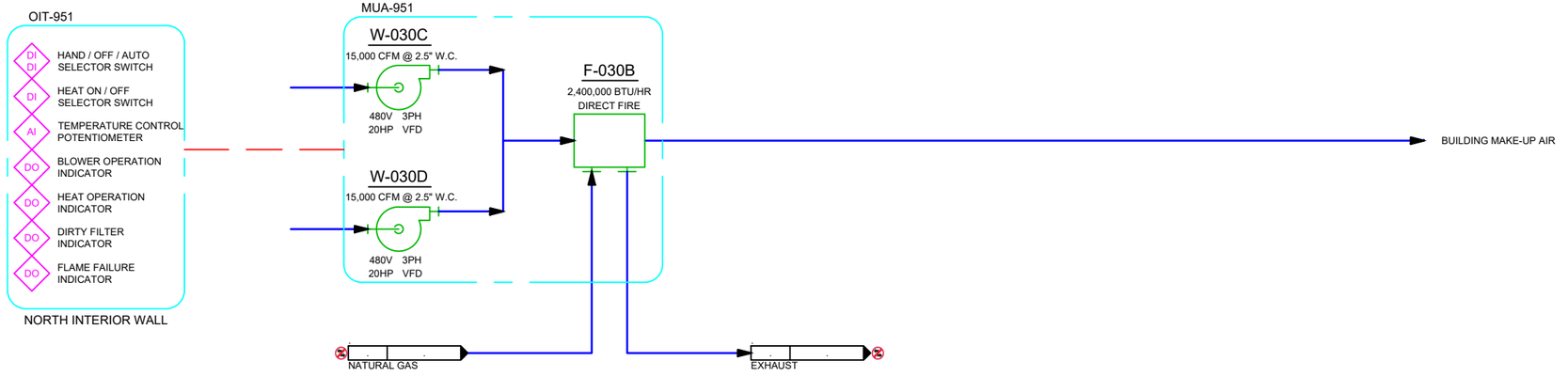

GENERAL NOTES:
1.

WIRING NOTES:
1. MUA-950/951 POWER FROM CIRCUIT BREAKER BUCKETS IN MCC-HVAC.
2. EACH MUA INCLUDES A SINGLE VFD SHARED BY BOTH BLOWERS, LOCATED AT THE MUA.
3. EACH MUA INCLUDES A REMOTE CONTROL PANEL.

NO.	DATE
BY	
REVISION	

NO.	DATE
BY	
REVISION	

ACEng
ADAMS & CHRISTENSEN ENGINEERING, INC.
782 WEXFORD CT.
GRAYSLAKE, ILLINOIS 60030

GREEN ARROW
2759 LONG ROAD
WOOSTER, OH 44691

THIS DRAWING CONTAINS VALUABLE CONFIDENTIAL AND PROPRIETARY INFORMATION THAT BELONGS TO GREEN ARROW ("GA"), AND IS SUBJECT TO A CONFIDENTIALITY AND NONDISCLOSURE AGREEMENT. GA IS THE AUTHOR AND OWNER OF THIS DRAWING, AND RETAINS ALL COMMON LAW, STATUTORY AND OTHER RIGHTS AND PRIVILEGES WITH RESPECT HERETO, INCLUDING COPYRIGHTS. THE INFORMATION CONTAINED HEREIN MAY NOT AT ANY TIME BE USED FOR ANY UNAUTHORIZED PURPOSE, NOR REPRODUCED BY OR PROVIDED TO ANY THIRD PARTY, WITHOUT THE PRIOR WRITTEN CONSENT OF GAE.

©2017, GREEN ARROW
ALL RIGHTS RESERVED.

Process HVAC Intake

Green Era
650 WEST 83rd ST
CHICAGO, IL 60620

AREA	CHECKED BY
030	
JOB NO.	DRAWN BY
1512	CY
SCALE	DATE
	9/10/2018
DWG NO.	
1030-001	
SHEET NO.	
001	

G:\My Drive\Green Arrow\02 Projects\1512 Chicago – Feldman – Green Era\07 Drawings\02 P&ID\1512 Green Era 2020\PID DWG\1512-1030-001-Process HVAC Intake.dwg

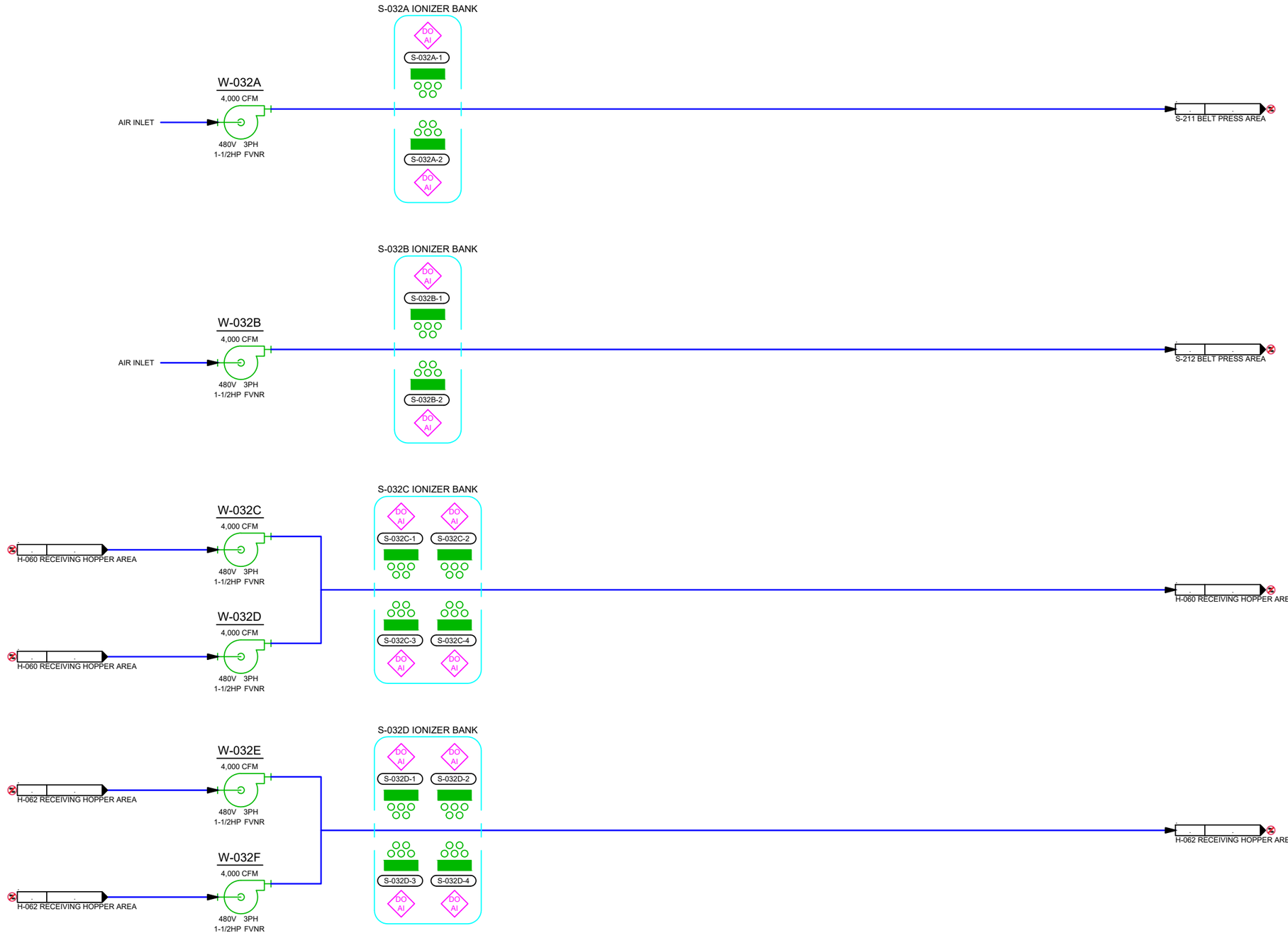

GENERAL NOTES:
1.

WIRING NOTES:
1. W-032A/B/C/D MOTOR WIRING TO MCC-1A.
2. W-032E/F MOTOR WIRING TO MCC-2A.

NO.	DATE
BY	
REVISION	

NO.	DATE
BY	
REVISION	

ADAMS & CHRISTENSEN
ENGINEERING, INC.
782 WEXFORD CT.
GRAYSLAKE, ILLINOIS 60030

GREEN ARROW

2759 LONG ROAD
WOOSTER, OH 44691

THIS DRAWING CONTAINS VALUABLE CONFIDENTIAL AND PROPRIETARY INFORMATION THAT BELONGS TO GREEN ARROW ("GA"), AND IS SUBJECT TO A CONFIDENTIALITY AND NONDISCLOSURE AGREEMENT. GA IS THE AUTHOR AND OWNER OF THIS DRAWING, AND RETAINS ALL COMMON LAW, STATUTORY AND OTHER RIGHTS AND PRIVILEGES WITH RESPECT HERETO, INCLUDING COPYRIGHTS. THE INFORMATION CONTAINED HEREIN MAY NOT AT ANY TIME BE USED FOR ANY UNAUTHORIZED PURPOSE, NOR REPRODUCED BY OR PROVIDED TO ANY THIRD PARTY, WITHOUT THE PRIOR WRITTEN CONSENT OF GAE.

©2017, GREEN ARROW

ALL RIGHTS RESERVED.

Process HVAC Building Ionizers

Green Era
650 WEST 83rd ST
CHICAGO, IL 60620

AREA	CHECKED BY
032	
JOB NO.	DRAWN BY
1512	CY
SCALE	DATE
	9/10/2018

DWG NO.
1032-001

SHEET NO.
001

G:\My Drive\Green Arrow\02 Projects\1512 Chicago – Feldman – Green Era\07 Drawings\02 P&ID\1512 Green Era 2020\PID DWG\1512-1032-001-Process HVAC Building Ionizers.dwg

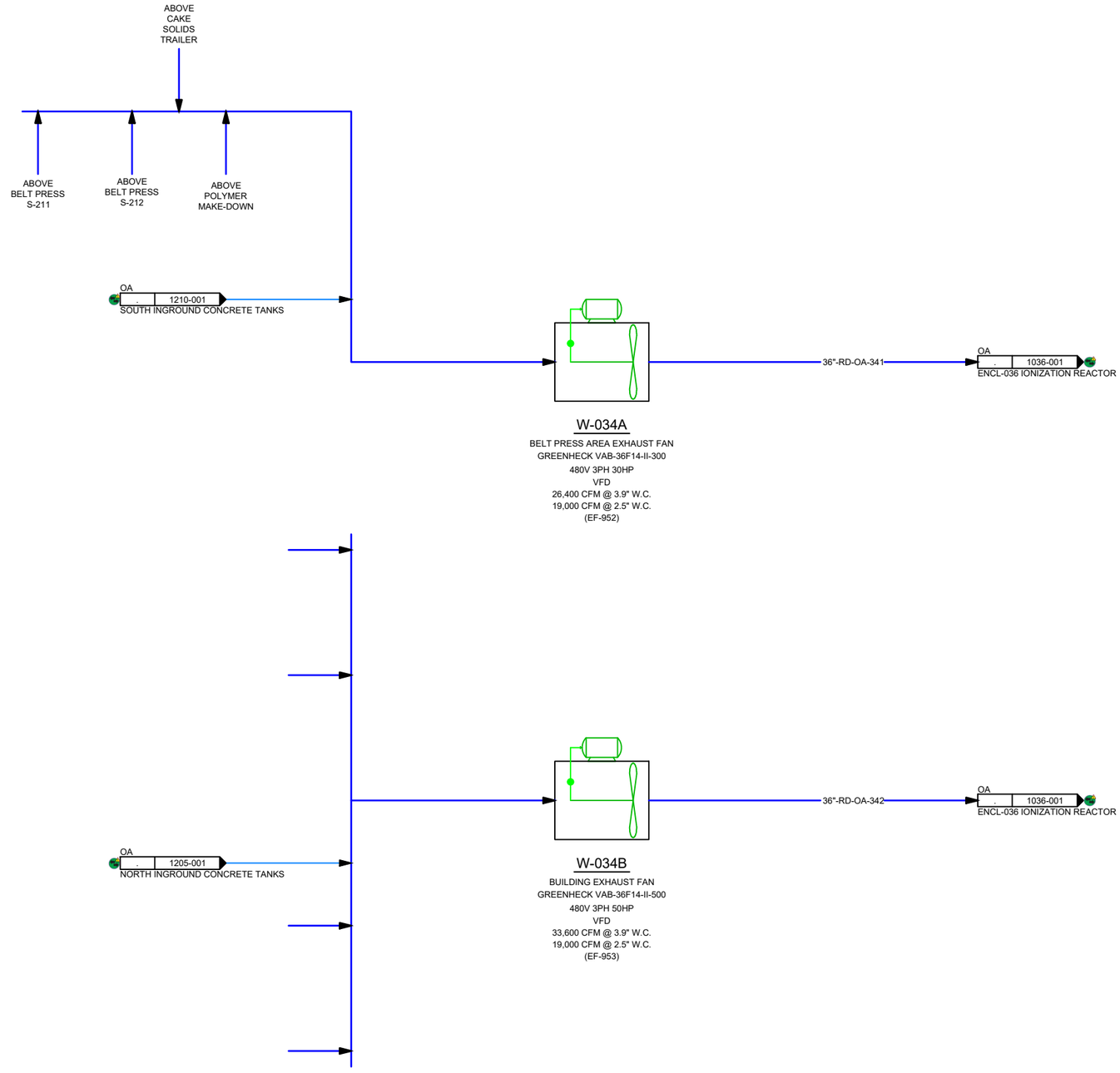

GENERAL NOTES:
1.

WIRING NOTES:
1. MOTOR WIRING TO MCC-HVAC

NO.	DATE
BY	
REVISION	

NO.	DATE
BY	
REVISION	

ACEng
ADAMS & CHRISTENSEN ENGINEERING, INC.
782 WEXFORD CT.
GRAYSLAKE, ILLINOIS 60030

GREEN ARROW
2759 LONG ROAD
WOOSTER, OH 44691

THIS DRAWING CONTAINS VALUABLE CONFIDENTIAL AND PROPRIETARY INFORMATION THAT BELONGS TO GREEN ARROW ("GA"), AND IS SUBJECT TO A CONFIDENTIALITY AND NONDISCLOSURE AGREEMENT. GA IS THE AUTHOR AND OWNER OF THIS DRAWING, AND RETAINS ALL COMMON LAW, STATUTORY AND OTHER RIGHTS AND PRIVILEGES WITH RESPECT HERETO, INCLUDING COPYRIGHTS. THE INFORMATION CONTAINED HEREIN MAY NOT AT ANY TIME BE USED FOR ANY UNAUTHORIZED PURPOSE, NOR REPRODUCED BY OR PROVIDED TO ANY THIRD PARTY, WITHOUT THE PRIOR WRITTEN CONSENT OF GAE.

©2017, GREEN ARROW
ALL RIGHTS RESERVED.

Process HVAC Exhaust

Green Era
650 WEST 83rd ST
CHICAGO, IL 60620

AREA	CHECKED BY
034	
JOB NO.	DRAWN BY
1512	CY
SCALE	DATE
	9/10/2018

DWG NO.
1034-001

SHEET NO.
001

G:\My Drive\Green Arrow\02 Projects\1512 Chicago – Feldman – Green Era\07 Drawings\02 P&ID\1512 Green Era 2020\PID DWG\1512-1034-001-Process HVAC Exhaust.dwg

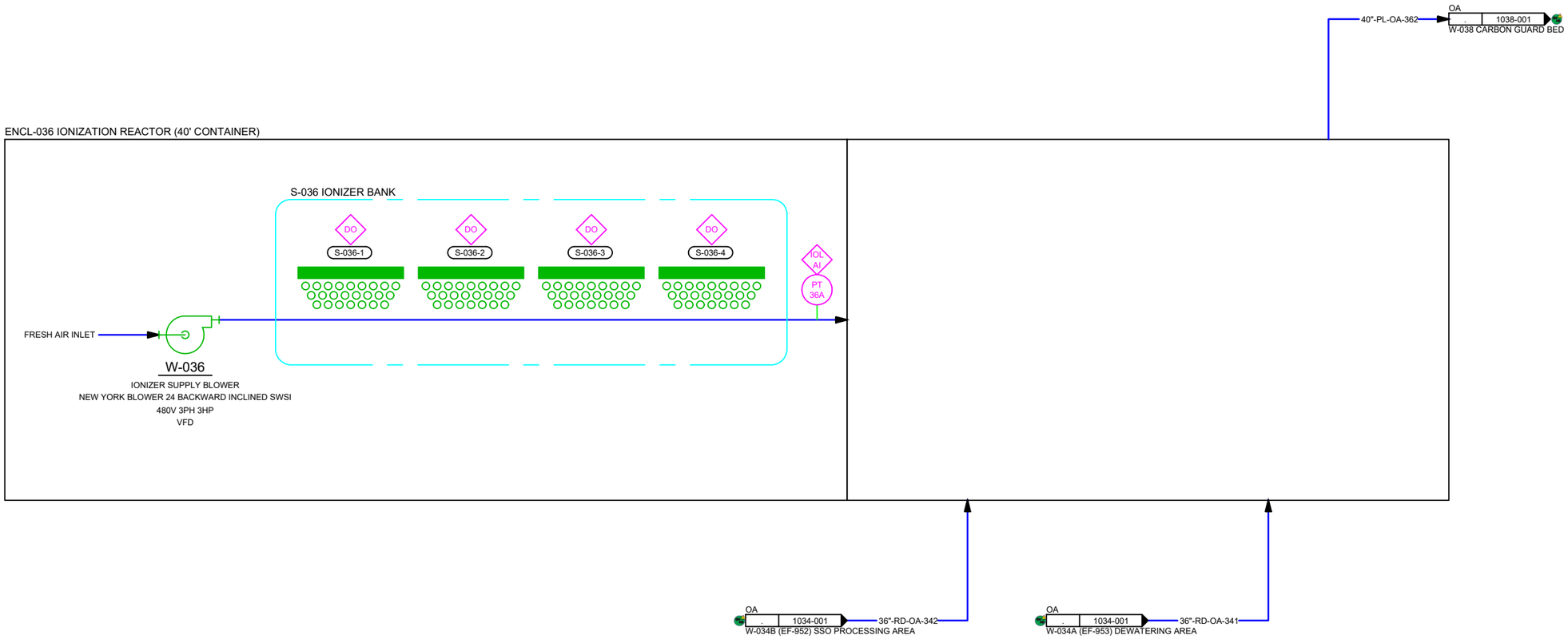

GENERAL NOTES:
1. EACH IONIZER IS POPULATED WITH 24 BULBS PER BANK.

WIRING NOTES:
1. ALL INSTRUMENTATION WIRING TO REMOTE I/O CABINET IOP-020
2. W-036 MOTOR WIRING TO MCC-2A

NO.	DATE
BY	
REVISION	

NO.	DATE
BY	
REVISION	

ADAMS & CHRISTENSEN
ENGINEERING, INC.
782 WEXFORD CT.
GRAYSLAKE, ILLINOIS 60030

GREEN ARROW

2759 LONG ROAD
WOOSTER, OH 44691

THIS DRAWING CONTAINS VALUABLE CONFIDENTIAL AND PROPRIETARY INFORMATION THAT BELONGS TO GREEN ARROW ("GA"), AND IS SUBJECT TO A CONFIDENTIALITY AND NONDISCLOSURE AGREEMENT. GA IS THE AUTHOR AND OWNER OF THIS DRAWING, AND RETAINS ALL COMMON LAW, STATUTORY AND OTHER RIGHTS AND PRIVILEGES WITH RESPECT HERETO, INCLUDING COPYRIGHTS. THE INFORMATION CONTAINED HEREIN MAY NOT AT ANY TIME BE USED FOR ANY UNAUTHORIZED PURPOSE, NOR REPRODUCED BY OR PROVIDED TO ANY THIRD PARTY, WITHOUT THE PRIOR WRITTEN CONSENT OF GAE.

©2017, GREEN ARROW
ALL RIGHTS RESERVED.

Process HVAC Exhaust
Ionizers

Green Era
650 WEST 83rd ST
CHICAGO, IL 60620

AREA	CHECKED BY
036	
JOB NO.	DRAWN BY
1512	CY
SCALE	DATE
	11/19/2018

DWG NO.
1036-001

SHEET NO.
001

G:\My Drive\Green Arrow\02 Projects\1512 Chicago – Feldman – Green Era\07 Drawings\02 P&ID\1512 Green Era 2020\PID DWG\1512-1036-001-Process HVAC Exhaust Ionizers.dwg

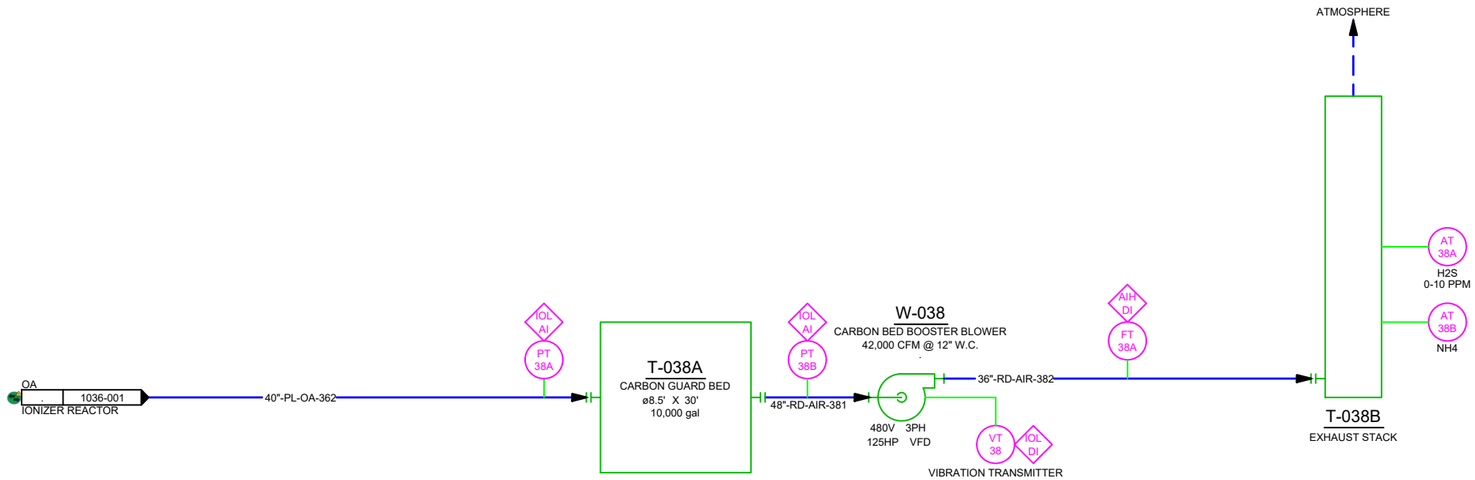

GENERAL NOTES:
1. ALL EQUIPMENT ON THIS SHEET WILL BE OUTDOORS.

WIRING NOTES:
1. ALL INSTRUMENTATION WIRING TO REMOTE I/O CABINET IOP-020
2. W-038 MOTOR WIRING TO STAND-ALONE VFD ENCLOSURE IN ELECTRICAL ROOM #124

NO.	DATE
BY	
REVISION	

NO.	DATE
BY	
REVISION	

ACEng

ADAMS & CHRISTENSEN
ENGINEERING, INC.
782 WEXFORD CT.
GRAYSLAKE, ILLINOIS 60030

GREEN ARROW

2759 LONG ROAD
WOOSTER, OH 44691

THIS DRAWING CONTAINS VALUABLE CONFIDENTIAL AND PROPRIETARY INFORMATION THAT BELONGS TO GREEN ARROW ("GA"), AND IS SUBJECT TO A CONFIDENTIALITY AND NONDISCLOSURE AGREEMENT. GA IS THE AUTHOR AND OWNER OF THIS DRAWING, AND RETAINS ALL COMMON LAW, STATUTORY AND OTHER RIGHTS AND PRIVILEGES WITH RESPECT HERETO, INCLUDING COPYRIGHTS. THE INFORMATION CONTAINED HEREIN MAY NOT AT ANY TIME BE USED FOR ANY UNAUTHORIZED PURPOSE, NOR REPRODUCED BY OR PROVIDED TO ANY THIRD PARTY, WITHOUT THE PRIOR WRITTEN CONSENT OF GAE.

©2017, GREEN ARROW

ALL RIGHTS RESERVED.

Process HVAC Carbon Bed

Green Era
650 WEST 83rd ST
CHICAGO, IL 60620

AREA	CHECKED BY
038	
JOB NO.	DRAWN BY
1512	CY
SCALE	DATE
	9/10/2018

DWG NO.
1038-001

SHEET NO.
001

G:\My Drive\Green Arrow\02 Projects\1512 Chicago – Feldman – Green Era\07 Drawings\02 P&ID\1512 Green Era 2020\PID DWG\1512-1038-001-Process HVAC Carbon Bed.dwg

1.1 PROJECT SUMMARY

A. PROJECT NAME: ANAEROBIC DIGESTION FACILITY
B. OWNER: GREEN ERA EDUCATIONAL NFP, GREEN ERA SUSTAINABILITY, LLC
C. SITE: CHICAGO, ILLINOIS
D. ADDRESS: 650 W. 83RD STREET, CHICAGO, IL 60620

1.2 GENERAL REQUIREMENTS

A. PERFORM ALL WORK IN ACCORDANCE WITH APPLICABLE FEDERAL, STATE, LOCAL CODES AND ORDINANCES, AND OWNER WORK AND SAFETY PROCEDURES AND REQUIREMENTS.
B. ALL MATERIALS AND EQUIPMENT TO BE PROVIDED AS PART OF THIS PROJECT TO INCLUDE CERTIFICATION DOCUMENTATION (EG., UL 508A) REQUIRED BY APPLICABLE CODES AND ORDINANCES FOR INSTALLATION AND OPERATION OF SAID MATERIALS/EQUIPMENT AS INTENDED IN THIS PROJECT.
C. THE CONTRACTOR SHALL BE RESPONSIBLE FOR UNLOADING, RIGGING, SETTING, ANCHORING, ADJUSTMENT, CONNECTION, INSTALLATION AND START-UP OF ALL EQUIPMENT IN ACCORDANCE WITH MANUFACTURER'S INSTRUCTIONS.
D. IT IS THE RESPONSIBILITY OF THE CONTRACTOR TO ENSURE THAT THIS DRAWING SET HAS BEEN ISSUED/RELEASED FOR CONSTRUCTION PRIOR TO PURCHASING EQUIPMENT OR MATERIALS AND COMMENCING CONSTRUCTION. RELEASE FOR CONSTRUCTION WILL BE INDICATED IN THE REVISION SECTION OF TITLE BLOCKS OF EACH SHEET. REVISION 0 WILL STATE "ISSUED FOR CONSTRUCTION".
E. THE DRAWINGS DO NOT ATTEMPT TO SHOW EXACT DETAILS OF ALL PIPING, EQUIPMENT AND STRUCTURES. LOCAL OBSTRUCTIONS, VARIATIONS IN EQUIPMENT CONNECTION LOCATIONS AND TOLERANCES, VARIANCES IN EQUIPMENT LOCATIONS, AND VARIATIONS IN VALVE AND IN-LINE COMPONENT DIMENSIONS THAT REQUIRE ADJUSTMENTS MAY BE ENCOUNTERED. ALL MEASUREMENTS AND DIMENSIONS SHALL BE VERIFIED ON SITE.
F. NO MECHANICAL EQUIPMENT SHALL BE LOCATED OVER ELECTRICAL EQUIPMENT UNLESS SPECIFICALLY SHOWN ON DRAWINGS.
G. HIGH PRESSURE SPRAY WASH ALL COOLING AND HEATING COILS TO REMOVE ALGAE, OIL, FILM, DUST ETC. PRIOR TO COMMISSIONING. USE SITE-APPROVED CHEMICALS AS REQUIRED TO PROVIDE COMPLETE CLEANING.
H. WALL THERMOSTATS TO BE INSTALLED 4'-0" ABOVE FINISHED FLOOR IN CONDITIONED SPACES AND 5'-0" IN PROCESS AND IAC ROOMS UNLESS SPECIFICALLY SHOWN OTHERWISE ON THE DRAWINGS.
I. ALL THERMOSTATS AND TEMPERATURE CONTROL ELEMENTS TO CONTROL TEMPERATURE MANAGEMENT (HEATING AND COOLING, AND VENTILATION PER THE SPECIFIED ENERGY EFFICIENCY CODE.
J. SUPPLY AND INSTALL ADDITIONAL SUPPORTING STEEL AND VIBRATION ISOLATION SYSTEMS REQUIRED FOR THE INSTALLATION OF THE HVAC EQUIPMENT.
K. MATERIALS WITHIN PLENUMS AND DUCT INSULATION SHALL BE NONCOMBUSTIBLE OR SHALL HAVE A FLAME SPREAD INDEX OF NOT MORE THAN 25 AND A SMOKE DEVELOPMENT INDEX OF NOTE MORE THAN 50 WHEN TESTED IN ACCORDANCE WITH ASTM E84 (UL 723 AND NFPA 255), AS AMENDED BY ANSI/NFPA 90A.
L. INSULATION, INCLUDING EXPOSED FOUNDATION AND LOWER LEVER INSULATION, TO BE PROTECTED DURING CONSTRUCTION.

1.3 REFERENCED SPECIFICATIONS

A. GREEN ERA EQUIPMENT SPEC, BOILER(S)F-360, F-361 BIOGAS/NATURAL GAS DUAL FUEL BOILERS.

1.4 APPLICABLE CODES, STANDARDS, AND CERTIFICATIONS

A. SEE SHEET G-200.

1.5 AMBIENT DESIGN CONDITIONS

A. SEE SHEET G-200.

1.6 INTERIOR DESIGN CONDITIONS

ROOM	PRESSURE	CONDITIONED	HEATING		COOLING	
			TEMP.	RH	TEMP.	RH
MAIN BAY	-0.5" WCg	NO	60°F	"	--	--
MAINTENANCE ROOM ELECTRICAL ROOM 1 SHOP OFFICE SHOP WATER CLOSET	--	YES	70°F	30%	75°F	50%
ELECTRICAL ROOM 2	--	YES	70°F	30%	75°F	50%
DOCK PIER	--	NO	60°F	"	--	--
BOILER ROOM	--	NO	60°F	"	AMB +20°F	--

1.7 ENERGY EFFICIENCY

A. CLIMATE ZONE: 5A
B. OCCUPANCY GROUP: NOT GROUP R

1.8 BUILDING ENVELOPE

A. THE PERIMETER WALLS AND BUILDING WALLS SHALL BE INSULATED TO PREVENT CONDENSATION AND TO MEET THE MINIMUM THERMAL REQUIREMENTS OF BOTH PREVAILING ENERGY CODE AND BUILDING HVAC REQUIREMENTS.
B. MAXIMUM U-FACTOR VALUES SHALL BE:
   1. ROOF: U-0.035
   2. WALLS, ABOVE GRADE: U-0.034
   3. WALLS, BELOW GRADE & UNHEATED FLOOR: C-0.119
   4. WALLS, BELOW GRADE & HEATED FLOOR: F-0.65
   4. SLAB ON GRADE FLOOR, HEATER: F-0.54
   5. SLAB ON GRADE FLOOR, F-0.65
C. AIR LEAKAGE: <0.004 DFM/FT^2 VIA CONTINUOUS AIR BARRIER THAT IS SEALED, CAULKED, GASKETED AND WEATHER STRIPPED.
D. THERMAL VALUE OF ROOF INSULATION SHALL MEET THE MINIMUM REQUIREMENTS OF BOTH THE PREVAILING ENERGY CODE AND PREVENT CONDENSATION.
E. ALL INSULATION TO BE INSTALLED PER MANUFACTURER'S INSTRUCTIONS.

1.9 OPENINGS

A. EXTERIOR MANDOORS SHALL BE GASKETED AND HAVE A MINIMUM R-VALUE OF 2.7.
B. OVERHEAD DOORS SHALL HAVE A MINIMUM R-VALUE OF 17.5.
C. LOADING DOCK DOORS TO HAVE WEATHER SHIELDS.
D. ALL OPENINGS AND PENETRATIONS TO BE SEALED, CAULKED, GASKETED AND/OR WEATHER STRIPPED.

1.10 TESTING, ADJUSTING, AND BALANCING (TAB)

A. CONTRACTOR TO SUBMIT A TAB PLAN THAT, AT A MINIMUM, INCLUDES:
   1. LIST OF ALL AIR FLOW, SOUND LEVEL, SYSTEM CAPACITY AND EFFICIENCY MEASUREMENTS TO BE PERFORMED AND A DESCRIPTION OF SPECIFIC TEST PROCEDURES, PARAMETERS, FORMULAS TO BE USED.
   2. COPY OF FIELD CHECKOUT SHEETS AND LOGS TO BE USED, LISTING EACH PIECE OF EQUIPMENT TO BE TESTED, ADJUSTED AND BALANCED WITH THE DATA CELLS TO BE GATHERED FOR EACH.
   3. DISCUSSION OF WHAT NOTATIONS AND MARKINGS WILL BE MADE ON THE DUCT AND PIPING DRAWINGS DURING THE PROCESS.
   4. FINAL TEST REPORT FORMS TO BE USED.
   5. PROCEDURES FOR FORMAL DEFICIENCY REPORTS, INCLUDING SCOPE, FREQUENCY AND DISTRIBUTION.
B. CONTRACTOR TO SUBMIT A FINAL REPORT THAT, AT A MINIMUM, INCLUDES:
   1. REVISE TAB PLAN TO REFLECT ACTUAL PROCEDURES AND SUBMIT AS PART OF FINAL REPORT.
   2. PRIOR TO COMMENCING WORK, SUBMIT REPORT FORMS OR OUTLINES INDICATING ADJUSTING, BALANCING, AND EQUIPMENT DATA REQUIRED.
   3. SUBMIT DRAFT COPIES OF REPORT FOR REVIEW PRIOR TO FINAL ACCEPTANCE OF PROJECT. PROVIDE FINAL COPIES FOR OWNER AND FOR INCLUSION IN OPERATING AND MAINTENANCE MANUALS.
   4. INCLUDE ACTUAL INSTRUMENT LIST, WITH MANUFACTURER NAME, SERIAL NUMBER, AND DATE OF CALIBRATION.
   5. TEST REPORTS: INDICATE DATA ON AABC MN-1 FORMS, FORMS PREPARED FOLLOWING ASHRAE STD. 111, OR NEBB FORMS. INCLUDE REDUCED SIZE FLOOR PLAN WITH EQUIPMENT, DUCTWORK, AND TERMINAL DEVICES SHOWN AND CORRELATING TO REPORT FORMS.
C. EXAMINATION: VERIFY THAT SYSTEMS ARE COMPLETE AND OPERABLE BEFORE COMMENCING WORK. ENSURE THE FOLLOWING CONDITIONS:
   1. SYSTEMS ARE STARTED AND OPERATING IN A SAFE AND NORMAL CONDITION.
   2. TEMPERATURE CONTROL SYSTEMS ARE INSTALLED COMPLETE AND OPERABLE.
   3. PROPER THERMAL OVERLOAD PROTECTION IS IN PLACE FOR ELECTRICAL EQUIPMENT.
   4. FINAL FILTERS ARE CLEAN AND IN PLACE. IF REQUIRED, INSTALL TEMPORARY MEDIA IN ADDITION TO FINAL FILTERS.
   5. DUCT SYSTEMS ARE CLEAN OF DEBRIS.
   6. FANS ARE ROTATING CORRECTLY.
   7. ACCESS DOORS ARE CLOSED AND DUCT END CAPS ARE IN PLACE.
   8. AIR OUTLETS ARE INSTALLED AND CONNECTED.
   9. DUCT SYSTEM LEAKAGE IS MINIMIZED.
D. INSTALLATION TOLERANCES:
   1. AIR HANDLING SYSTEMS: ADJUST TO WITHIN PLUS OR MINUS 5 PERCENT OF DESIGN FOR SUPPLY SYSTEMS AND PLUS OR MINUS 10 PERCENT OF DESIGN FOR RETURN AND EXHAUST SYSTEMS.
   2. AIR OUTLETS AND INLETS: ADJUST TOTAL TO WITHIN PLUS 10 PERCENT AND MINUS 5 PERCENT OF DESIGN TO SPACE. ADJUST OUTLETS AND INLETS IN SPACE TO WITHIN PLUS OR MINUS 10 PERCENT OF DESIGN.
E. RECORDING AND ADJUSTING
   1. ENSURE RECORDED DATA REPRESENTS ACTUAL MEASURED OR OBSERVED CONDITIONS.
   2. PERMANENTLY MARK SETTINGS OF VALVES, DAMPERS, AND OTHER ADJUSTMENT DEVICES ALLOWING SETTINGS TO BE RESTORED. SET AND LOCK MEMORY STOPS.
   3. AFTER ADJUSTMENT, TAKE MEASUREMENTS TO VERIFY BALANCE HAS NOT BEEN DISRUPTED OR THAT SUCH DISRUPTION HAS BEEN RECTIFIED.
   4. LEAVE SYSTEMS IN PROPER WORKING ORDER, REPLACING BELT GUARDS, CLOSING ACCESS DOORS, CLOSING DOORS TO ELECTRICAL SWITCH BOXES, AND RESTORING THERMOSTATS TO SPECIFIED SETTINGS.
   5. AT FINAL INSPECTION, RECHECK RANDOM SELECTIONS OF DATA RECORDED IN REPORT. RECHECK POINTS OR AREAS AS SELECTED AND WITNESSED BY THE OWNER.
F. AIR SYSTEM PROCEDURE
   1. ADJUST AIR HANDLING AND DISTRIBUTION SYSTEMS TO PROVIDE REQUIRED OR DESIGN SUPPLY, RETURN, AND EXHAUST AIR QUANTITIES AT SITE ALTITUDE.
   2. MAKE AIR QUANTITY MEASUREMENTS IN DUCTS BY PITOT TUBE TRAVERSE OF ENTIRE CROSS SECTIONAL AREA OF DUCT.
   3. MEASURE AIR QUANTITIES AT AIR INLETS AND OUTLETS.
   4. ADJUST DISTRIBUTION SYSTEM TO OBTAIN UNIFORM SPACE TEMPERATURES FREE FROM OBJECTIONABLE DRAFTS AND NOISE.
   5. USE VOLUME CONTROL DEVICES TO REGULATE AIR QUANTITIES ONLY TO THE EXTENT THAT ADJUSTMENTS DO NOT CREATE OBJECTIONABLE AIR MOTION OR SOUND LEVELS. EFFECT VOLUME CONTROL BY DUCT INTERNAL DEVICES SUCH AS DAMPERS AND SPLITTERS.
   6. VARY TOTAL SYSTEM AIR QUANTITIES BY ADJUSTMENT OF FAN SPEEDS. PROVIDE DRIVE CHANGES REQUIRED. VARY BRANCH AIR QUANTITIES BY DAMPER REGULATION.
   7. MEASURE STATIC AIR PRESSURE CONDITIONS ON AIR SUPPLY UNITS, INCLUDING FILTER AND COIL PRESSURE DROPS, AND TOTAL PRESSURE ACROSS THE FAN. MAKE ALLOWANCES FOR 50 PERCENT LOADING OF FILTERS.
   8. ADJUST OUTSIDE AIR AUTOMATIC DAMPERS, OUTSIDE AIR, RETURN AIR, AND EXHAUST DAMPERS FOR DESIGN CONDITIONS.
   9. MEASURE BUILDING STATIC PRESSURE AND ADJUST SUPPLY, RETURN, AND EXHAUST AIR SYSTEMS TO PROVIDE REQUIRED RELATIONSHIP BETWEEN EACH TO MAINTAIN APPROXIMATELY 0.05 INCHES POSITIVE STATIC PRESSURE.

REV	DATE	BY	DESCRIPTION
E			
D			
C			
B			
A	10-9-20	RAA	ISSUED FOR CONSTRUCTION

SCALE: NONE
DATE: 12-11-19
DRAWN: JFD
CHECKED: RFC
APPROVED: RAA

ACEng
www.ac-engineering.com
Adams & Christensen Engineering, Inc.
782 Wexford Ct., Grayslake, IL 60030
Illinois Design Firm #184.006676-0002

CLIENT
GREEN ERA SUSTAINABILITY, LLC
ANAEROBIC DIGESTER PROJECT
650 W. 83RD STREET
CHICAGO, IL. 60620

DESCRIPTION
HVAC NOTES & SPECIFICATIONS
GENERAL

PROJECT NO:
1019.001

SHEET:
M-700

3.1 GENERAL REQUIREMENTS

A. PERFORM ALL WORK IN ACCORDANCE WITH APPLICABLE FEDERAL, STATE, AND LOCAL CODES AND ORDINANCES.
B. VERIFY LOCATIONS OF EXISTING UTILITIES PRIOR TO BEGINNING ANY EARTHWORK OR CONSTRUCTION.
C. PROTECT EXISTING STRUCTURES, PIPES, PUMPS, INSTRUMENTS, INSTRUMENTS AND ITEMS TO REMAIN.
D. WORK TO COMPLY WITH ASME B31.3.
E. PLASTIC PIPING TO BE INSTALLED IN ACCORDANCE WITH PIPE MANUFACTURER'S RECOMMENDED INSTALLATION PROCEDURES.
F. THE DRAWINGS DO NOT ATTEMPT TO SHOW EXACT DETAILS OF ALL PIPING. LOCAL OBSTRUCTIONS, VARIATIONS IN EQUIPMENT CONNECTION LOCATIONS, AND VARIATIONS IN VALVE AND IN-LINE COMPONENT DIMENSIONS THAT REQUIRE OFFSETS MAY BE ENCOUNTERED. ALL MEASUREMENTS AND DIMENSIONS SHALL BE VERIFIED ON SITE.

3.2 PIPE MATERIALS

A. COPPER TUBING
1. PIPE TO BE TYPE K, HARD TEMPERED, SEAMLESS COPPER TUBING, ASTM B88 AND FEDERAL SPECIFICATION WWT799. MANUFACTURER'S NAME OR TRADEMARK, AND TYPE OF TUBING TO BE IDENTIFIED AT 3 FOOT INTERVALS.
2. JOINTS TO BE BRAZED.

B. PVC PIPE
1. SCHEDULE: 40
2. CONFORM TO GRADE 1, WHITE, ASTM D1784, ASTM D1785, ASTM D3915, AND ASTM D2513.
3. FITTINGS:
   a. SOCKET END/FITTINGS: CONFORM TO ASTM D2466, ASTM D2467, ASTM D3915, AND ASTM F1970.
   b. THREADED END/FITTINGS: CONFORM TO ASTM D2464 AND ANSI B1.20.1.
   c. FLANGES: VAN STONE
   d. FITTINGS SHALL BE SAME GRADE AS AND CLASS AS PIPE.
4. SOLVENT CEMENT FOR JOINING PVC PIPING: ASTM D2564. INCLUDE PRIMER ACCORDING TO ASTM F656.

C. CARBON STEEL PIPE
1. SCHEDULE: SEE DRAWINGS
2. CONFORM TO ASTM A106, GRADE B
3. PIPES WITH UNDERGROUND EXPOSURE/BURIED SHALL HAVE CORROSION PROTECTION AS IDENTIFIED IN "BURIED PIPE INSTALLATION".
4. WELDING
   a. WELDING TO BE DONE IN ACCORDANCE WITH ASME CODE FOR PRESSURE PIPING BY COMPETENT WELDING EQUIPMENT OPERATORS.
   b. FURNISH PROOF OF COMPETENCY FOR EACH WELDER BY SUBMITTING A PREVIOUSLY ISSUED ASME WELDING CERTIFICATE OF AUTHORIZATION TO OWNER'S REPRESENTATIVE, IF REQUESTED. SPECIFIC CERTIFICATION FOR THIS PROJECT IS NOT REQUIRED.
   c. WELDING TO BE BY OXYACETYLENE OR ELECTRIC ARC METHOD. WELDING NECK FLANGES TO BE PROVIDED AT FLANGED VALVES AND AT EQUIPMENT.
5. FITTINGS 2" PIPE AND SMALLER: JOIN SEAMLESS OR WELDED PIPING 2" AND SMALLER:
   a. THREADED: COMPLY WITH ANSI B1.20.1 AND WITH RECTOR SEAL PIPE JOINT COMPOUND ON MALE THREADS ONLY.
   b. FITTINGS AND FLANGES TO COMPLY WITH ASTM A105.
   c. FITTINGS TO BE 3,000 LB.
6. FITTINGS 2 ½" PIPE AND LARGER UNLESS SPECIFICALLY NOTED:
   a. WELDED: BUTT WELDED
   b. FITTINGS TO CONFORM THE ASTM A234.
   c. FLANGES TO CONFORM TO ASTM A105.
   d. SCHEDULE TO MATCH PIPING.

B. BLACK IRON PIPE (BIP)
1. SCHEDULE: SEE DRAWINGS
2. CONFORM TO ASTM A53, TYPE S, GRADE A
3. FITTINGS
   a. MATERIALS: CONFORM TO ASTM A197
   b. DIMENSIONS: CONFORM TO ASME B16.3, B16.14, AND B16.39 (UNIONS)
   c. THREADS: CONFORM THE ASME B1.20.1
   d. CLASS: 150
4. FLANGES: TO BE ASME/ANSI B16.1 CLASS 150

C. GASKETS: FULL-FACED GASKETS BETWEEN FLAT-FACED FLANGES AND RING GASKETS FOR RAISED FACE FLANGES. MINIMUM THICKNESS OF 1/8 INCH. CLASS TO MATCH FLANGES.
1. MATERIALS: 304SS & PTFE STYLE "CG"

D. PIPE FASTENERS
1. TYPE 304 STAINLESS STEEL
   a. STUDS/BOLTS: ASTM A193-B8 CLASS 1, UNC. A320-B8 CLASS 1, UNC ALLOWED FOR PIPE PRESSURES LESS THAN 150 PSIG.
   b. HEX NUTS: DOUBLE ASTM A194-8, 18-8, UNC
   c. SAE FLAT WASHERS: 18-8
   d. SPLIT RING LOCK WASHERS: 18-8

3.3 FLEXIBLE CONNECTORS

B. FLEXIBLE HOSE CONNECTORS – METAL
1. TYPE: CORRUGATED METAL HOSE WITH BRAID
2. MATERIAL: 304/316 SS
3. BRAIDS: DOUBLE
4. PRESSURE RATING: 150 PSIG MAXIMUM WORKING PRESSURE AND 70°F MAXIMUM OPERATING TEMPERATURE
5. PROCESS CONNECTIONS: NPT.
6. STANDARDS: ANSI 536 CSA
7. INSTALLATION: INSTALL PER MANUFACTURER'S INSTRUCTIONS AND REQUIREMENTS. GUIDING AND ANCHORING PER EJMA RECOMMENDATIONS AND GUIDELINES.
8. STANDARD OF ACCEPTANCE: METRAFLEX GAS CONNECTOR.

3.4 VALVES

A. BALL VALVE, CARBON STEEL, 3-PIECE, 2 INCHES AND SMALLER
1. CONNECTIONS: SOCKET WELDED OR THREADED (NPT)
2. PRESSURE RATING: 1000 PSI WOG
3. PORT: FULL
4. BODY: CARBON STEEL (ASTM A216 GR. WCB)
5. BALL: CARBON STEEL (ASTM A216 GR. WCB)
6. STEM: 316 STAINLESS STEEL, BLOW-OUT PROOF
7. SEATS: PTFE/RTFE
8. SEALS: PTFE/RTFE
9. BOLTS: 304 STAINLESS STEEL
10. HANDLE: LOCKING LEVER HANDLE
11. COMPLIANCE: ASME B16.33 OR ANZI Z 21.15 (<0.5 PSIG ONLY)
12. STANDARD OF ACCEPTANCE: FLOW-TEK SERIES 8000, APOLLO SERIES 83A-100 (THREADED), APOLLO SERIES 83A-200 (SOCKET WELD)

B. BALL VALVE, CARBON STEEL, 2-PIECE, 2 INCHES AND SMALLER
1. CONNECTIONS: SOCKET WELDED OR THREADED (NPT)
2. PRESSURE RATING: 1000 PSI WOG
3. PORT: FULL
4. BODY: CARBON STEEL (ASTM A216 GR. WCB)
5. BALL: CARBON STEEL (ASTM A216 GR. WCB)
6. STEM: 316 STAINLESS STEEL, BLOW-OUT PROOF
7. SEATS: PTFE/RTFE
8. SEALS: PTFE/RTFE
9. HANDLE: LOCKING LEVER HANDLE
10. COMPLIANCE: ASME B16.33 OR ANZI Z 21.15 (<0.5 PSIG ONLY)
11. STANDARD OF ACCEPTANCE: FLOW-TEK SERIES 90, APOLLO SERIES 72-100

C. BALL VALVE, CARBON STEEL, 2-PIECE, 2 LARGER THAN 2 INCHES
1. CONNECTIONS: BUTTWELD OR ASME CLASS 150 FLANGE
2. PRESSURE RATING: CLASS 150 (CLASS 300)
3. PORT: FULL
4. BODY: CARBON STEEL (ASTM A216 GR. WCB)
5. BALL: CARBON STEEL (ASTM A216 GR. WCB)
6. STEM: 316 STAINLESS STEEL, BLOW-OUT PROOF
7. SEATS: PTFE/RTFE
8. SEALS: PTFE/RTFE
9. HANDLE: LOCKING LEVER HANDLE
10. COMPLIANCE: ASME B16.33 OR ANZI Z 21.15 (<0.5 PSIG ONLY)
11. STANDARD OF ACCEPTANCE: FLOW-TEK MODEL F15/F30, APOLLO SERIES 88A-200

D. BUTTERFLY VALVE, CAST IRON
1. CONNECTION: LUG
2. DISC: 316 STAINLESS STEEL
3. HANDLE: 8" AND LESS = LEVER, GREATER THAN 8" = GEAR
4. SEATS: RESILIENT SEATED. EPDM
5. STANDARD OF ACCEPTANCE: BRAY SERIES 31, CRANE 23/44, CENTRE LINE SERIES 200, APOLLO SERIES 143, DEZURIK BOS-CL, KEYSTONE 61L, OR APPROVED EQUAL.

E. GLOBE VALVE, FORGED STEEL
1. CLASS: 800LB
2. CONNECTION: SWXSW
3. PORT: CONVENTIONAL
4. BODY: ASTM A105N
5. TRIM: CR13
6. PACKING: GRAPHITE
7. BONNET: WELDED
8. HANDLE: OS&Y HANDWHEEL
9. STANDARD OF ACCEPTANCE: CRANE FIGURE B3644XUW, NEWCO FIGURE 28S-FS2 OR APPROVED EQUAL.

F. ANGLED SEAT VALVE WITH PNEUMATIC PILOT
1. CONNECTION: NPT
2. BODY: BRASS/GUNMETAL
3. TRIM: NBE
4. SEATS/SEALS: PTFE
5. FAIL POSITION: FAIL OPEN
6. ACTUATOR:PNEUMATIC PILOT
7. STANDARD OF ACCEPTANCE: BURKERT TYPE 2000 WITH TYPE B 454 617

3.5 PIPE SLEEVES

A. CONCRETE; WATERTIGHT – STANDARD WEIGHT STEEL SLEEVE WITH CONTINUOUS WELDED 2 INCH WATER COLLAR. SEALS SHALL BE LINK-SEAL OR EQUAL.
B. CAST-IN-PLACE CONCRETE AND MASONRY; NON-WATERTIGHT – STANDARD WEIGHT STEEL SLEEVE WITH OAKUM OR CAULK SEAL.
C. FLOOR SLEEVES IN EXPOSED AREAS – SCHEDULE 40 GALVANIZED STEEL PIPE SLEEVE.

3.6 BURIED PIPE INSTALLATION

A. EXISTING UTILITIES, PIPING, AND STRUCTURES
1. EXISTING UTILITIES AND STRUCTURES:
   A. EXISTING STRUCTURES, UTILITIES, AND PIPING ARE SHOWN ON THE DRAWINGS ONLY BY GENERAL LOCATION AND THE OWNER WILL MAKE ALL OTHER KNOWN RECORDS AVAILABLE. HOWEVER, THE OWNER DOES NOT GUARANTEE THE LOCATIONS AS SHOWN ON THE DRAWINGS.
   B. THE CONTRACTOR SHALL HAVE SOLE RESPONSIBILITY FOR PROVIDING TEMPORARY SUPPORT AND FOR PROTECTING AND MAINTAINING ALL EXISTING UTILITIES, PIPING, AND STRUCTURES IN THE PROJECT AREA DURING THE ENTIRE PERIOD OF CONSTRUCTION.
2. DEVIATIONS OCCASIONED BY OTHER UTILITIES, PIPE, AND STRUCTURES:
   A. WHEREVER EXISTING UTILITIES, PIPE, OR STRUCTURES PRESENT OBSTRUCTIONS TO THE GRADE AND ALIGNMENT OF THE PIPE, THEY SHALL BE PERMANENTLY SUPPORTED, REMOVED, RELOCATED OR RECONSTRUCTED BY THE CONTRACTOR THROUGH COOPERATION WITH OWNER. IN THOSE INSTANCES WHERE THE RELOCATION OR RECONSTRUCTION IS IMPRACTICABLE, A DEVIATION FROM THE GRADE WILL BE ORDERED AND THE CHANGE SHALL BE MADE IN THE MANNER DIRECTED.

B. EXCAVATIONTO BE CONDUCTED PER EXCAVATION SPECIFICATION/NOTES.
C. PIPE TRENCH AND BACKFILL AND BEDDING MATERIALS
1. FOLLOW PIPE AND FITTING MANUFACTURER'S RECOMMENDATIONS.
2. PLACE PIPE BEDDING BELOW PIPE BARREL (BEFORE SETTING PIPE) IN MAXIMUM 12 INCHES LIFTS AND COMPACT TO 95% OF THE MODIFIED PROCTOR MAXIMUM DRY DENSITY (ASTM D 1557). PIPE BEDDING TO BE 3/4 INCH CRUSHED STONE OR SAND.
3. COVER PIPE WITH BEDDING IN MAXIMUM 12 INCHES LIFTS AND COMPACT TO 95% OF THE MODIFIED PROCTOR MAXIMUM DRY DENSITY (ASTM D 1557). BACKFILL TO BE 3/4 INCH CRUSHED STONE OR NATURAL SOILS.
4. EMPLOY A PLACEMENT METHOD THAT DOES NOT DISTURB OR DAMAGE PIPING IN TRENCHES.
5. DO NOT BACKFILL OVER POROUS, WET, FROZEN OR SPONGY SUBGRADE SURFACES.
6. MAKE GRADE CHANGES GRADUAL AND BLEND WITH SURROUNDING AREA. GRADE TO DRAIN.
7. RESTORE SURFACE TO PRE-EXISTING CONDITIONS UNLESS NOTED OTHERWISE.

D. PLACEMENT OF PIPE WITHIN TRENCHES: INSTALL PIPE, FITTINGS, AND ACCESSORIES IN ACCORDANCE WITH SPECIFICATIONS AND MANUFACTURER'S INSTRUCTIONS AND AT THE GRADE AND SLOPE INDICATED ON THE DRAWINGS. BLOW OUT WITH COMPRESSED AIR ALL PIPING OR TUBING TO REMOVE ALL FOREIGN MATERIAL.
E. BUILDING PROCESS DRAIN PIPING SHALL BE INSTALLED WITH ADEQUATE SLOPE AS REQUIRED FOR EACH PARTICULAR SYSTEM. SANITARY WASTE PIPING SHALL BE INSTALLED WITH THE FOLLOWING MINIMUM SLOPES:
1. 1/4" PER FOOT FOR PIPE SIZES 3" DIA. AND SMALLER.
2. 1/8" PER FOOT FOR PIPE SIZES GREATER THAN 3" DIA.

F. PLASTIC TRACER TAPE
1. PLASTIC TRACER TAPE IS TO BE PLACED ABOVE BURIED PIPE UNLESS SPECIFIED OTHERWISE. PLACE TRACER TAPE APPROXIMATELY 2.5 FEET ABOVE THE PIPE CENTERLINE BUT NOT LESS THAN 12 INCHES DEEP. FOR PIPES BURIED 8 FEET DEEP OR GREATER, TRACER TAPE IS TO BE PLACED 12 INCHES BELOW GROUND. .
2. TRACER TAPE IS TO BE 6 INCHES WIDE, COLORED TO MATCH THE PIPE SERVICE, AND MADE OF INERT PLASTIC MATERIAL SUITABLE FOR DIRECT BURIAL. IF PIPE COLOR CODING IS NOT SPECIFIED, TRACER TAPE IS TO BE YELLOW.
3. TRACE TAPE LABELING SHALL CONTAIN BOLD LETTERS APPROXIMATELY 2 INCHES HIGH. MESSAGE TO BE "CAUTION _____ PIPE BURIED BELOW. THE BLANK TO INDICATE THE PIPE CONTENTS. THE MESSAGE IS TO BE REPEATED EVERY 2 FEET.
4. STANDARDS OF ACCEPTANCE: W. H. BRADY CO., SETEN NAME PLATE CORPORATION, MARKING SERVICES, INC.

G. LEAK TESTING SHALL BE CONDUCTED AS DETAILED IN FIELD QUALITY CONTROL.

3.7 ABOVE GROUND PIPE INSTALLATION

A. PIPES SHALL BE ROUND AND STRAIGHT. CUTTING SHALL BE DONE WITH PROPER TOOLS AND PIPES SHALL BE REAMED TO FULL SIZE AFTER CUTTING.
B. PIPING SHALL BE PROPERLY ENCLOSED, SUPPORTED, GUIDED, ANCHORED, SWAY BRACED, CONNECTED, TESTED, CLEANED AND FLUSHED OUT, AND SHALL BE PROPERLY INSULATED AND PROTECTED WHERE REQUIRED.
C. INSTALL PIPING FREE OF SAGS AND BENDS.
D. PIPES SHALL BE RUN WITH PROPER SLOPE TO PROVIDE FOR EASY DRAINING, IN GROUP RUNS WHERE APPLICABLE, AND IN A NEAT AND ORDERLY MANNER.
E. SIZES SHOWN IN THE DRAWINGS ARE NOMINAL PIPE SIZES AND NOT OUTSIDE DIAMETERS.
F. CAP OR COVER ALL OPEN PIPING DURING ERECTION TO PREVENT ENTRY OF FOREIGN MATERIAL.
G. BLOW OUT WITH COMPRESSED AIR ALL PIPING OR TUBING TO BE ERECTED TO REMOVE ALL FOREIGN MATERIAL.

ROBERT A. ADAMS REGISTERED NO. 062-054110 STATE OF ILLINOIS PROFESSIONAL ENGINEER
12/20/19
EXP: 11/30/21

REV	DATE	BY	DESCRIPTION
5			
4			
3			
2			
1			
1	10-9-20	RAA	ISSUED FOR CONSTRUCTION

SCALE: NONE
DATE: 12-11-19
DRAWN: JFD
CHECKED: RFC
APPROVED: RAA

ACEng
www.ac-engineering.com
Adams & Christensen Engineering, Inc.
782 Wexford Ct., Grayslake, IL 60030
Illinois Design Firm #184.006676-0002

CLIENT
GREEN ERA SUSTAINABILITY, LLC
ANAEROBIC DIGESTER PROJECT
650 W. 83RD STREET
CHICAGO, IL. 60620

DESCRIPTION
HVAC NOTES & SPECIFICATIONS
PIPING (1 OF 2)

PROJECT NO: 1019.001
SHEET: M-702

3.8 PIPE HANGERS AND SUPPORTS

A. PROVIDE CONCRETE INSERTS, CLAMPS, PIPE HANGERS, ANCHORS AND EQUIPMENT SUPPORTS REQUIRED TO RIGIDLY SUPPORT THE SYSTEMS AND EQUIPMENT INSTALLED. HANGER DESIGN SHALL PERMIT VERTICAL ADJUSTMENT AND LATERAL MOVEMENT TO ALLOW PIPE EXPANSION.

B. PIPER HANGERS AND SUPPORTS SHALL MEET THE REQUIREMENTS OF SECTION 305 OF THE INTERNATIONAL MECHANICAL CODE.

C. PIPER HANGERS AND SUPPORTS FOR FUEL GAS SHALL MEET THE REQUIREMENTS OF THE APPLICABLE FUEL GAS CODE.

D. PIPE SUPPORT SPACING SHALL NOT EXCEED:

PIPE MATERIAL	MAX. HORIZ. SPACING (FT)	MAX. VERT. SPACING (FT)
PVC	4	10
COPPER PIPE	12	10
COPPER TUBING, SMALLER THAN 1-1/2"	6	10
STEEL PIPE, ½"	6	10
STEEL PIPE, ¾" – 1"	8	10
STEEL PIPE, 1-1/4"	10	10
STEEL PIPE, >1-1/4"	12	10

3.9 FIELD QUALITY CONTROL

A. NON-DESTRUCTIVE EXAMINATION(S) TO BE PERFORMED USING THE METHODS AND FREQUENCIES SPECIFIED IN THE APPLICABLE ASME B31 STANDARD, AWWA, OR DOT STANDARD. TESTING/EXAMINATION PERSONNEL SHALL BE TRAINED AND CERTIFIED TO PERFORM THE TEST/EXAMINATIONS.

B. LEAK TEST - GENERAL: ALL PIPELINES SHALL BE TESTED FOR LEAKS AND EXFILTRATION AS SPECIFIED.
1. TEMPORARY VALVES, PLUGS, BULKHEADS, AND OTHER PRESSURE TESTING AND WATER CONTROL EQUIPMENT AND MATERIALS SHALL BE PROVIDED BY THE CONTRACTOR SUBJECT TO OWNER'S REVIEW. NO MATERIALS SHALL BE USED WHICH WOULD BE INJURIOUS TO PIPELINE STRUCTURE, FUTURE FUNCTION, AND SITE PERSONNEL. AIR TEST GAGES SHALL BE LABORATORY-CALIBRATED TEST GAGES AND SHALL BE RECALIBRATED BY A CERTIFIED LABORATORY AT THE CONTRACTOR'S EXPENSE PRIOR TO THE LEAKAGE TEST, IF REQUIRED BY OWNER.
2. UNLESS OTHERWISE SPECIFIED, CLEAN WATER FOR TESTING SHALL BE FURNISHED BY THE CONTRACTOR. THE CONTRACTOR SHALL MAKE ALL NECESSARY PROVISIONS FOR CONVEYING THE WATER FROM THE SOURCE TO THE POINTS OF USE.
3. EACH SECTION OF PIPE SHALL BE INSTALLED PRIOR TO TESTING.
4. EACH SECTION OF PIPE SHALL BE TESTED AS A SINGLE UNIT USING PLUGS OR VALVES.
5. ALL TESTING OPERATIONS SHALL BE PERFORMED IN THE PRESENCE OF OWNER.

C. LEAK TEST PROCEDURES
1. PIPES FOR COMPRESSED AIR SERVICE.
   A. COMPRESSED AIR SHALL THEN BE INTRODUCED INTO THE ISOLATED TEST SECTION UNTIL THE INTERNAL PRESSURE STABILIZES AT THE PRESSURES SPECIFIED IN ITEM D – TEST PRESSURES.
   B. FOLLOWING PRESSURE STABILIZATION, THE PIPE SECTION SHALL REMAIN PRESSURIZED FOR A PERIOD OF 15 MINUTES. AT THE END OF THIS TIME THE PIPE PRESSURE SHALL MEET THE REQUIREMENTS SPECIFIED IN ITEM E – ACCEPTABLE TEST CRITERIA.
   C. IF THE RESULTS ARE UNACCEPTABLE, CONTRACTOR TO PROCEED AS DETAILED IN SECTION FE – REQUIRED TEST FAILURE ACTIONS.
   D. IF RESULTS ARE ACCEPTABLE, RELEASE OF PRESSURE FROM THE PIPELINES SHALL BE PERFORMED IN ACCORDANCE WITH THE CONTRACTOR'S PROPOSED TESTING PLAN AS APPROVED BY OWNER.
   E. ALL TESTING PLUGS, VALVES, AND FITTINGS SHALL BE SUBSEQUENTLY REMOVED FROM THE DISCHARGE PIPING FOLLOWING TESTING.
2. PIPES LIQUID SERVICE.
   A. WATER SHALL BE INTRODUCED INTO THE ISOLATED TEST SECTION AND PRESSURIZED TO THE EXTENT PRACTICAL.
   B. COMPRESSED AIR SHALL THEN BE INTRODUCED INTO THE ISOLATED TEST SECTION UNTIL THE INTERNAL PRESSURE STABILIZES AT THE PRESSURES SPECIFIED IN ITEM D – TEST PRESSURES.
   C. FOLLOWING PRESSURE STABILIZATION, THE PIPE SECTION SHALL REMAIN PRESSURIZED FOR A PERIOD OF 15 MINUTES. AT THE END OF THIS TIME THE PIPE PRESSURE SHALL MEET THE REQUIREMENTS SPECIFIED IN ITEM E – ACCEPTABLE TEST CRITERIA.
   D. IF THE RESULTS ARE UNACCEPTABLE, CONTRACTOR TO PROCEED AS DETAILED IN SECTION F – REQUIRED TEST FAILURE ACTIONS.
   E. IF RESULTS ARE ACCEPTABLE, RELEASE OF WATER FROM PIPELINES SHALL BE PERFORMED IN ACCORDANCE WITH THE CONTRACTOR'S PROPOSED TESTING PLAN AS APPROVED BY OWNER.
   F. ALL TESTING PLUGS, VALVES, AND FITTINGS SHALL BE SUBSEQUENTLY REMOVED FROM THE DISCHARGE PIPING FOLLOWING TESTING.
3. ADDITIONAL REQUIREMENTS FOR BURIED PIPING
   A. ALL PIPE TRENCHES SHALL BE PARTIALLY BACKFILLED PRIOR TO TESTING.
   B. ONCE THE BURIED PIPE HAS BEEN PROPERLY TESTED, THE PIPE WILL BE COMPLETELY BACKFILLED AND TEST AGAIN IN PLACE TO ENSURE THAT ALL JOINTS AND APPURTENANCES ARE FREE FROM LEAKS.

D. TEST PRESSURES
1. GRAVITY AND VACUUM PIPE: TEST PRESSURE TO BE AS SPECIFIED IN THE PIPE SCHEDULE. IF TEST PRESSURES ARE NOT LISTED IN A PIPE SCHEDULE, THE TEST PRESSURE SHALL BE 5 PSIG.
2. FORCEMAINS AND PRESSURIZED PIPE: TEST PRESSURE TO BE AS SPECIFIED IN THE PIPE SCHEDULE. IF TEST PRESSURES ARE NOT LISTED IN A PIPE SCHEDULE, THE TEST PRESSURE SHALL BE 150% OF THE DESIGN PRESSURE OR THE PIPE'S MAXIMUM ALLOWABLE INTERNAL PRESSURE, WHICHEVER IS LESS.

E. ACCEPTABLE TEST CRITERIA. THE PRESSURE WITHIN THE PIPE SHALL NOT DEVIATE (CONSIDERING NO APPLICABLE CHANGE IN ATMOSPHERIC CONDITIONS) BY MORE THAN 2 PERCENT DURING TEST PERIOD FOR FORCEMAINS AND PRESSURE PIPES OR 0.5 PSIG FOR GRAVITY FLOW AND VACUUM PIPES.

F. REQUIRED TEST FAILURE ACTIONS. WHEN LEAKAGE EXCEEDS THE AMOUNT ALLOWED, THE CONTRACTOR, SHALL LOCATE THE LEAKS AND MAKE THE NECESSARY REPAIRS OR REPLACEMENTS, TO REDUCE THE LEAKAGE TO THE SPECIFIED LIMITS. ANY INDIVIDUALLY DETECTABLE LEAKS SHALL BE REPAIRED, REGARDLESS OF THE RESULTS OF THE TESTS. THE PIPE SECTIONS SHALL BE TESTED AGAIN BY THE CONTRACTOR.

3.10 STEEL PIPE COATINGS (FERROUS PIPING ONLY)

A. NON-SUBMERGED/ABOVEGROUND
1. BARE/UNINSULATED (OPERATING TEMPERATURE <170°F):
   a. SURFACE PREPARATION SSPC-SP2 AND 3
   b. FIRST COAT: EPOXY MASTIC 5 MIL DFT
   c. SECOND COAT: URETHANE 2 MIL DFT
2. INSULATED (OPERATING TEMPERATURE <170°F):
   a. SURFACE PREPARATION SSPC-SP2 AND 3
   b. FIRST COAT: EPOXY MASTIC 5 MIL DFT
3. HIGH TEMPERATURE, INSULATED (OPERATING TEMPERATURE >=170°F):
   a. SURFACE PREPARATION SSPC-SP10
   b. FIRST COAT: INORGANIC ZINC SILICATE PRIMER 2-3 MIL DFT
4. HIGH TEMPERATURE, UNINSULATED (OPERATING TEMPERATURE >=170°F):
   a. SURFACE PREPARATION SSPC-SP10
   b. FIRST COAT: INORGANIC ZINC SILICATE PRIMER 2-3 MIL DFT
   c. SECOND COAT: HIGH SOLIDS EPOXY 4-8 MIL DFT

B. SUBMERGED OR BURIED:
1. OPERATING TEMPERATURE <170°F:
   a. SURFACE PREPARATION SSPC-SP10
   b. FIRST COAT: COAL TAR EPOXY, 8 MIL D.F.T
   c. SECOND COAT: COAL TAR EPOXY, 8 MIL D.F.T.
2. OPERATING TEMPERATURE >=170°F:
   a. SURFACE PREPARATION SSPC-SP10
   b. FIRST COAT: INORGANIC ZINC SILICATE PRIMER 2-3 MIL DFT
   c. SECOND COAT: HIGH SOLIDS EPOXY (UNTINTED) 4-8 MIL DFT

3.11 PIPE INSULATION

A. PIPE SHALL BE INSULATION IN ACCORDANCE WITH SECTION C403.2.10 OF THE INTERNATIONAL ENERGY EFFICIENCY CODE AND THIS SECTION:

B. INSULATION SCHEDULE:
1. REFRIGERANT PIPING: 0.5" INSULATION WITH JACKET FOR PHYSICAL AND SOLAR RADIATION DEGRADATION.
2. CONDENSATE DRAIN PIPING, INSIDE): 1.0" 1-INCH THICK FIBERGLASS INSULATION AND JACKETED WITH A PVC JACKET.
3. ALL OTHER PIPING: MINIMUM INSULATION THICKNESS
   a. PIPE SIZES 2-INCH AND SMALLER: 1-INCH.
   b. PIPE SIZES 2-1/2 INCH TO 8-INCH: 1-1/2 INCHES.
   c. PIPE SIZES 10-INCH AND LARGER: 2 INCHES.

ROBERT A. ADAMS REGISTERED NO. 062-054119 STATE OF ILLINOIS PROFESSIONAL ENGINEER
12/20/19
EXP: 11/30/21

REV	DATE	BY	DESCRIPTION
E			
D			
C			
B			
A	10-9-20	RAA	ISSUED FOR CONSTRUCTION

SCALE: NONE
DATE: 12-11-19
DRAWN: JFD
CHECKED: RFC
APPROVED: RAA

ACEng
www.ac-engineering.com
Adams & Christensen Engineering, Inc.
782 Wexford Ct., Grayslake, IL 60030
Illinois Design Firm #184.006676-0002

CLIENT
GREEN ERA SUSTAINABILITY, LLC
ANAEROBIC DIGESTER PROJECT
650 W. 83RD STREET
CHICAGO, IL. 60620

DESCRIPTION
HVAC NOTES & SPECIFICATIONS
PIPING (2 OF 2)

PROJECT NO: 1019.001
SHEET: M-703

4.1 ROOF-TOP UNITS – HEAT PUMPS

A. DESCRIPTION: FACTORY ASSEMBLED AND TESTED; AND CONSISTING OF COMPRESSORS, CONDENSERS, EVAPORATOR COILS, CONDENSER AND EVAPORATOR FANS, HEAT PUMPS, REFRIGERATION AND TEMPERATURE CONTROLS, FILTERS, AND DAMPERS.
C. TYPE: DUAL FUEL HEAT PUMP
D. COOLING CAPACITY: SEE HVAC SCHEDULE
E. HEATING CAPACITY: SEE HVAC SCHEDULE
F. EFFICIENCY: HIGH. SEE HVAC SCHEDULE FOR REQUIRED RATINGS
G. ELECTRICAL: 460VAC / 3PH / 60HZ. SINGLE POINT.
H. CONTROLS: ON-BOARD PROCESSOR AND SYSTEM COMPLAINT WITH APPLICABLE ENERGY EFFICIENCY CODE, AT A MINIMUM WITH:
1. OPTIMAL START CONTROL
2. PREVENT SUPPLEMENTAL ELECTRICAL HEAT WHEN NOT REQUIRED
3. CLOGGED FILTER SWITCH
4. FAN FAILURE SWITCH
5. DISCHARGE AIR SENSING SWITCH
I. FRESH AIR CONTROLS:
1. 100% POWER EXHAUST FAN. SEE SHEET M-710 FOR REQUIRED CAPACITY AND HORSEPOWER.
2. LOW LEAK ECONOMIZER WITH BAROMETRIC RELIEF
J. COMPRESSOR: SCROLL
K. FANS:
1. OUTDOOR: PROPELLER
2. INDOOR: SINGLE OR MULTIZONE VAV
3. MINIMUM MOTOR EFFICIENCY <1 HP IS 70%
L. ENCLOSURE:
1. HINGED ACCESS PANELS
M. AIR FILTERS: MFG. STD.
N. CONDENSER COIL: MFG. STD.
O. REFRIGERANT SYSTEM:
1. R-410A WITH PRESSURE RELIEF VALVE ON HIGH PRESSURE SIDE FOR UNITS WITH OVER 30 POUNDS CHARGE.
2. NO EXPANSION VALVES, DEVICES, OR CONNECTIONS WITH AIR STREAM
3. REFRIGERATION PIPING TO BE TYPE "K" COPPER.
4. PIPING CONNECTIONS TO BE BRAZED.
P. THROUGH BASE CONNECTIONS: SEE DRAWINGS AND HVAC SCHEDULE
Q. ACCESSORIES:
1. DISCONNECT SWITCH
2. 120VAC POWERED CONVENIENCE OUTLET
3. SMOKE DETECTORS: SUPPLY AND RETURN DUCTS
4. ROOF CURB WHERE MOUNTED ON ROOF (SEE DRAWINGS)

4.2 ROOF-TOP UNITS – AIR CONDITIONERS

A. DESCRIPTION: FACTORY ASSEMBLED AND TESTED; CONSISTING OF COMPRESSORS, CONDENSERS, EVAPORATOR COILS, CONDENSER AND EVAPORATOR FANS, REFRIGERATION AND TEMPERATURE CONTROLS, FILTERS, AND DAMPERS.
B. TYPE: AIR CONDITIONER WITH NATURAL GAS HEAT
C. COOLING CAPACITY: SEE HVAC SCHEDULE
D. HEATING CAPACITY: SEE HVAC SCHEDULE
E. EFFICIENCY: SEE HVAC SCHEDULE FOR REQUIRED RATINGS
F. ELECTRICAL: 460VAC / 3PH / 60HZ. SINGLE POINT.
G. CONTROLS: ON-BOARD PROCESSOR AND SYSTEM COMPLAINT WITH APPLICABLE ENERGY EFFICIENCY CODE, AT A MINIMUM WITH:
1. OPTIMAL START CONTROL
2. PREVENT SUPPLEMENTAL ELECTRICAL HEAT WHEN NOT REQUIRED
3. CLOGGED FILTER SWITCH
4. FAN FAILURE SWITCH
5. DISCHARGE AIR SENSING SWITCH
H. FRESH AIR CONTROLS:
1. 100% POWER EXHAUST FAN. SEE SHEET M-710 FOR REQUIRED CAPACITY AND HORSEPOWER.
2. ULTRA LOW LEAK EXHAUST DAMPER AND ECONOMIZER.
I. COMPRESSOR: SCROLL
J. FANS:
1. OUTDOOR: PROPELLER
2. INDOOR: MULTIZONE VAV WITH STATIC PRESSURE SENSORS AND PRESSURE RELIEF.
3. MINIMUM MOTOR EFFICIENCY <1 HP IS 70%
K. ENCLOSURE:
2. HINGED ACCESS PANELS
L. AIR FILTERS: MFG. STD.
M. CONDENSER COIL: MFG. STD.
N. REFRIGERANT SYSTEM:
1. R-410A WITH PRESSURE RELIEF VALVE ON HIGH PRESSURE SIDE FOR UNITS WITH OVER 30 POUNDS CHARGE.
2. NO EXPANSION VALVES, DEVICES, OR CONNECTIONS WITH AIR STREAM
3. REFRIGERATION PIPING TO BE TYPE "K" COPPER.
4. PIPING CONNECTIONS TO BE BRAZED.
O. THROUGH BASE CONNECTIONS: SEE DRAWINGS AND HVAC SCHEDULE
P. ACCESSORIES:
1. DISCONNECT SWITCH
2. 120VAC POWERED CONVENIENCE OUTLET
3. SMOKE DETECTORS: SUPPLY AND RETURN DUCTS
4. ROOF CURB WHERE MOUNTED ON ROOF (SEE DRAWINGS)

4.3 MAKE-UP AIR UNITS

A. TYPE: SEE HVAC SCHEDULE
B. CAPACITY: SEE HVAC SCHEDULE
C. MOUNTING: SEE HVAC SCHEDULE
D. ORIENTATION: HORIZONTAL
E. LOCATION: OUTDOORS
F. GENERAL:
1. 100% OUTSIDE AIR
2. LEFT SIDE DUCT CONNECTION
3. RIGHT SIDE ACCESS
G. HOUSING
1. DOUBLE WALL CONSTRUCTION WITH 1" FIBERGLASS INSULATION.
2. G90 GALVANIZED
H. COOLING SYSTEM - NA
I. HEATING SYSTEM
1. DIRECT GAS-FIRED FURNACE
2. FUEL: NATURAL GAS
3. GAS PRESSURE: 14" WCG TO 5 PSIG
4. EFFICIENCY: 92% MIN.
5. TURNDOWN: 25:1
6. SAFETY: HIGH GAS LIMIT SWITCH WITH MAIN GAS VALVE AUTOMATIC CLOSURE ON HIGH GAS PRESSURE.
J. INDOOR FAN - NA
K. FAN MOTOR
1. ODP, NEMA PREMIUM EFFICIENCY.
L. CONTROLS
1. REMOTE CONTROL PANEL WITH HOA SWITCH, BLOWER ON INDICATOR LIGHT, DIRTY FILTER INDICATOR LIGHT.
2. ENCLOSURE: NEMA 1 GALVANIZED STEEL WITH ENAMEL FINISH.
M. FILTERS: 2" ALUMINUM
N. STANDARD OF ACCEPTANCE: SEE HVAC SCHEDULE
O. ADDITIONAL ACCESSORIES
1. DIRTY FILTER SWITCH
2. DUCT SMOKE DETECTOR (GREENHECK DUCTSD OR COMPATIBLE). SHIPPED LOOSE FOR FIELD INSTALLATION.
3. WEATHERHOOD WITH BIRD SCREEN. KNOCKDOWN-TYPE TO BE FIELD ERECTED.
4. INLET DAMPER (GREENHECK VCD-23 OR EQUAL).
5. FREEZE PROTECTION.
6. AIR FLOW PROVING CONTACT.

4.4 AIR HANDLER UNITS

A. TYPE: SEE HVAC SCHEDULE
B. CAPACITY: SEE HVAC SCHEDULE
C. MOUNTING: SEE HVAC SCHEDULE
D. ORIENTATION: HORIZONTAL
E. GENERAL:
1. END RETURN
2. LEFT OR RIGHT REFRIGERANT/HEATING FLUID AND ELECTRICAL CONNECTIONS
F. CASING
1. ZINC COATED, HEAVY GAUGE, GALVANIZED STEEL WITH WEATHER-RESISTANT BAKED ENAMEL FINISH.
G. REFRIGERATION SYSTEM – NA
H. HEATING SYSTEM
1. DIRECT GAS-FIRED FURNACE
2. FUEL: NATURAL GAS
3. GAS PRESSURE: 14" WCG TO 5 PSIG
4. EFFICIENCY: 92% MIN.
5. TURNDOWN: 25:1
6. SAFETY: HIGH GAS LIMIT SWITCH WITH MAIN GAS VALVE AUTOMATIC CLOSURE ON HIGH GAS PRESSURE.
I. INDOOR FAN
1. CENTRIFUGAL TYPE.
2. PERMANENTLY LUBRICATED BEARINGS.
J. FAN MOTOR:
1. TEFC NEMA PREMIUM EFFICIENCY
2. CLASS B OR GREATER
K. CONTROLS
a. REMOTE CONTROL PANEL WITH HOA SWITCH AND BLOWER ON INDICATOR LIGHT.
b. ENCLOSURE: NEMA 1 GALVANIZED STEEL WITH ENAMEL FINISH.
L. FILTERS: NA
M. STANDARD OF ACCEPTANCE: SEE HVAC SCHEDULE
N. ADDITIONAL ACCESSORIES
1. DUCT SMOKE DETECTOR (GREENHECK DUCTSD OR COMPATIBLE). SHIPPED LOOSE FOR FIELD INSTALLATION.
2. INLET DAMPER (GREENHECK VCD-23 OR EQUAL)
3. HANGING MOUNTING BRACKETS

4.5 UNIT HEATERS – VENT FREE GAS HEATERS

A. CONTRACTOR SHALL PROVIDE, RECEIVE, STORE, HANDLE, MOUNT & SUPPORT, PIPE, VENT, ALIGN, INSTALL ALL OPTIONAL FEATURES, TAG, WIRE, AND OTHERWISE INSTALL AND START-UP VENT-FREE GAS HEATERS. EACH CAPABLE OF:
1. TYPE: SEE UNIT HEATER SCHEDULE
2. FUEL: SEE UNIT HEATER SCHEDULE
3. CAPACITY (BTU/HR): SEE UNIT HEATER SCHEDULE
4. CONTROLS: SEE UNIT HEATER SCHEDULE
5. EFFICIENCY: SEE UNIT HEATER SCHEDULE
C. FUEL GAS TRAIN: CONTRACTOR TO PROVIDE FUEL GAS PIPING, VALVES, REGULATORS, FLEXIBLE CONNECTORS, SEDIMENT TRAPS, 1/8-INCH PLUGGED NPT TAP, AND UNIONS SIZED FOR EACH HEATER AND MEETING THE REQUIREMENTS OF THE GOVERNING MECHANICAL CODE AND NFPA 54.
D. INSTALLATION: INSTALLATION TO COMPLY WITH HEATER MANUFACTURER'S REQUIREMENTS, GOVERNING MECHANICAL CODE AND NFPA 54.
E. STANDARD OF ACCEPTANCE: SEE HVAC SCHEDULE
E. UNIT HEATERS SHALL INCLUDE THE FOLLOWING OPTIONS/ACCESSORIES
1. DISCONNECT SWITCH
2. MOUNTING BRACKETS

4.6 LABORATORY HOODS

A. TYPE: WALL CANOPY
B. CAPACITY: SEE HVAC SCHEDULE
C. HOOD
1. SIZE: SEE HVAC SCHEDULE
2. RIGHT END: FINISHED
3. LEFT END: FINISHED
D. COLLAR SIZE: SEE HVAC SCHEDULE
E. HOOD MATERIAL: 430 STAINLESS STEEL
F. LIGHT: NA

4.7 CEILING EXHAUST FANS

A. DESCRIPTION: DIRECT-DRIVEN CEILING-MOUNTED EXHAUST FAN.
B. CAPACITIES: SEE HVAC SCHEDULE
C. HOUSING: GALVANIZED-STEEL
D. GRILLE: POLYSTYRENE
E. CEILING RADIATION DAMPER
F. MOTOR: ODP WITH THERMAL OVERLOAD
G. BACKDRAFT DAMPER: SPRING LOADED
H. APPROVALS: UL 705, ENERGY STAR
I. STANDARD OF ACCEPTANCE: SEE HVAC SCHEDULE
J. ACCESSORIES: ROUND DISCHARGE VENT CAP.

4.8 SIDEWALL EXHAUST FANS

A. CONTRACTOR SHALL PROVIDE, RECEIVE, STORE, HANDLE, SET IN PENETRATION, FLASH & SEAL, ALIGN, TAG, WIRE AND OTHERWISE INSTALL AND START-UP OF WALL MOUNTED VENTILATOR(S) AS IDENTIFIED IN THE SUPPLY & EXHAUST VENTILATION FAN SCHEDULE.
B. TYPE: ALUMINUM, WALL-MOUNTED, HORIZONTAL CENTRIFUGAL EXHAUST VENTILATOR.
C. DRIVE: DIRECT OR BELT
D. FAN SHALL BE BOLTED AND WELDED CONSTRUCTION UTILIZING CORROSION-RESISTANT FASTENERS. THE SPUN ALUMINUM BODY SHALL BE CONSTRUCTED OF MINIMUM 16 GAUGE MARINE ALLOY ALUMINUM, BOLTED TO A RIGID ALUMINUM SUPPORT STRUCTURE. THE SPUN ALUMINUM WALL FLANGES SHALL HAVE PRE-PUNCHED KEY SLOT HOLES. THE WINDBAND SHALL HAVE A ROLLED BEAD FOR ADDED STRENGTH. AN INTEGRAL CONDUIT CHASE SHALL BE PROVIDED INTO THE MOTOR COMPARTMENT. THE MOTOR SHALL BE ENCLOSED IN A WATER-TIGHT COMPARTMENT, SEPARATED FROM EXHAUST AIR STREAM. UNIT SHALL BEAR AN ENGRAVED NAMEPLATE INDICATING DESIGN CFM AND STATIC PRESSURE.
E. WHEEL SHALL BE CENTRIFUGAL BACKWARD INCLINED, CONSTRUCTED OF 100-PERCENT ALUMINUM, INCLUDING PRECISION CAST ALUMINUM HUB. AN AERODYNAMIC ALUMINUM INLET CONE SHALL BE PROVIDED FOR MAXIMUM PERFORMANCE AND EFFICIENCY. WHEEL SHALL BE BALANCED IN ACCORDANCE WITH AMCA STANDARD 204-96.
F. MOTOR SHALL BE 120VAC, 1 PHASE, 60 HZ ODP, THERMAL OVERLOAD, 1.15 MIN. SERVICE FACTOR. MIN. 70% EFFICIENCY (<1 HP).
G. CERTIFICATIONS: UL 705 AND AMCA CERTIFIED RATINGS SEAL FOR SOUND AND AIR PERFORMANCE.
H. PERFORMANCE:
1. TYPE: SEE SUPPLY & EXHAUST VENTILATION FAN SCHEDULE
2. AIR FLOW: SEE SUPPLY & EXHAUST VENTILATION FAN SCHEDULE
3. STATIC PRESSURE: SEE SUPPLY & EXHAUST VENTILATION FAN SCHEDULE
I. FANS SHALL INCLUDE THE FOLLOWING OPTIONS:
1. ALUMINUM GRAVITY BACKDRAFT DAMPER
2. BIRD SCREEN: ½ INCH ALUMINUM MESH
4. DISCONNECT SWITCH: NONFUSIBLE TYPE, WITH THERMAL-OVERLOAD PROTECTION MOUNTED INSIDE FAN HOUSING, FACTORY WIRED THROUGH AN INTERNAL ALUMINUM CONDUIT. 3 PHASE MOTORS ONLY.
5. DISCONNECT SWITCH
J. STANDARD OF ACCEPTANCE: SEE HVAC SCHEDULE

ROBERT A. ADAMS
REGISTERED
NO.
062-054110
STATE OF
ILLINOIS
PROFESSIONAL ENGINEER
12/20/19
EXP:
11/30/21

REV	DATE	BY	DESCRIPTION
5			
4			
3			
2			
1	10-9-20	RAA	ISSUED FOR CONSTRUCTION

SCALE: NONE
DATE: 12-11-19
DRAWN: JFD
CHECKED: RFC
APPROVED: RAA

ACEng
www.ac-engineering.com
Adams & Christensen Engineering, Inc.
782 Wexford Ct., Grayslake, IL 60030
Illinois Design Firm #184.006676-0002

CLIENT
GREEN ERA SUSTAINABILITY, LLC
ANAEROBIC DIGESTER PROJECT
650 W. 83RD STREET
CHICAGO, IL. 60620

DESCRIPTION
HVAC NOTES & SPECIFICATIONS
EQUIPMENT (1 OF 3)

PROJECT NO:
1019.001

SHEET:
M-704

4.9 AXIAL/PROPELLER WALL FANS

A. CAPACITIES: SEE HVAC SCHEDULE
B. WHEEL:
1. CONSTRUCTED OF CAST ALUMINUM BLADES AND HUBS
2. SECURELY ATTACHED TO FAN SHAFT WITH A STANDARD SQUARE KEY AND SET SCREW OR TAPERED BUSHING
3. STATICALLY AND DYNAMICALLY BALANCED IN ACCORDANCE TO AMCA STANDARD 204-05
4. THE PROPELLER AND FAN INLET WILL BE MATCHED AND SHALL HAVE PRECISE RUNNING TOLERANCES FOR MAXIMUM PERFORMANCE AND OPERATING EFFICIENCY
C. MOTORS:
1. DESCRIPTION: NEMA MG 1, DESIGN B, DESIGNED FOR USE WITH VARIABLE SPEED DRIVES
2. ROTOR: SQUIRREL CAGE.
3. BEARINGS: GREASE LUBRICATED ANTI-FRICTION BALL BEARINGS WITH HOUSINGS EQUIPPED WITH PLUGGED PROVISION FOR RELUBRICATION, RATED FOR MINIMUM AFBMA 9, L-10 LIFE OF 20,000 HOURS.
4. EFFICIENCY: PREMIUM PER NEMA MG 1.
5. INSULATION CLASS: H.
6. TEMPERATURE RISE: MATCHED TO RATING FOR CLASS B INSULATION.
7. THERMAL PROTECTION: MEET NEMA MG 1 REQUIREMENTS.
8. ENCLOSURE: TEFC.
9. HAZARDOUS AREA RATING: NON-HAZARDOUS
D. SHAFT AND BEARINGS:
1. BEARING SHALL BE CAST PILLOW BLOCK
2. BEARINGS SHALL BE SELECTED FOR A MINIMUM L10 LIFE IN EXCESS OF 100,000 HOURS (EQUIVALENT TO L50 AVERAGE LIFE OF 500,000 HOURS), AT MAXIMUM CATALOGED OPERATING SPEED
3. FAN SHAFT FIRST CRITICAL SPEED IS AT LEAST 25 PERCENT OVER MAXIMUM OPERATING SPEED
E. DRIVE FRAME:
1. BOLTED STRUCTURAL STEEL CHANNEL CONSTRUCTION
2. SHALL BE GALVANIZED STEEL WITH ONE PIECE DRAWN VENTURI
3. ONE-PIECE MOTOR/BEARING PLATE ON SIZES 24-36 AND TWO PIECE ON SIZES 42-72
F. DRIVE ASSEMBLY:
1. BELTS, PULLEYS, AND KEYS OVERSIZED FOR A MINIMUM OF 150 PERCENT OF DRIVEN HORSEPOWER
2. BELT: STATIC FREE AND OIL RESISTANT
3. FULLY MACHINED CAST IRON PULLEYS, KEYED AND SECURELY ATTACHED TO THE WHEEL AND MOTOR SHAFTS
4. THE MOTOR PULLEY SHALL BE ADJUSTABLE FOR FINAL SYSTEM BALANCING
5. READILY ACCESSIBLE FOR MAINTENANCE
G. OPTIONS/ACCESSORIES:
1. DAMPERS:
a. TYPE: GREENHECK VCD-23
b. ACTUATOR: HONEYWELL MS4120F1204 IN BELIMO ZS-260 HOUSING. OR EQUAL.
2. WALL HOUSING MOUNTING:
a. FAN PANEL WILL BE MOUNTED VERTICALLY DIRECTING THE AIR HORIZONTALLY INTO THE BUILDING. WALL HOUSING WILL BE MOUNTED IN A MANNER THAT WILL NOT HAVE ANY HOUSING PROTRUDING INSIDE OF THE BUILDING. MOTOR AND DRIVES WILL BE ACCESSIBLE FROM THE EXTERIOR OF THE BUILDING
b. CONSTRUCTED OF GALVANIZED STEEL WITH HEAVY GAUGE MOUNTING FLANGES AND PREPUNCHED MOUNTING HOLES
c. HOUSING SHALL INCLUDE OSHA APPROVED MOTOR GUARD
d. FINAL PRODUCT WILL BE FULLY ASSEMBLED INCLUDING MOTOR, DRIVES, AND PULLEYS
3. WEATHERHOOD:
a. SHALL SHIELD WALL OPENING AND DAMPERS FROM RAIN AND SNOW
b. MATERIAL TYPE: GALVANIZED
c. TURNDOWN ANGLE: 90
d. 1/2 INCH BY 1/2 INCH WELD WIRE BIRDSCREEN
4. FILTER: ALUMINUM MEDIA WITH 2" FORMED ALUMINUM FRAME. DUST SPOT EFFICIENCY: 20.

4.10 TUBE AXIAL INLINE FANS

A. CAPACITIES: SEE HVAC SCHEDULE
B. DISCHARGE POSITION: HORIZONTAL
C. HOUSING: CONTINUOUSLY WELDED STEEL WITH INTEGRAL FLANGES, MOUNTING SYSTEM, INSPECTION DOOR, AND OHSA-COMPLIANT GUARDS.
D. FAN WHEEL
1. AIRFOIL BLADES WITH CONTINUOUSLY WELDED HUBS
2. STATICALLY AND DYNAMICALLY BALANCED TO G6.3 OF ANSI S2.19
E. MOTOR: TEFC NEMA EFFICIENCY MOTOR, CLASS B OR GREATER INSULATION, THERMAL OVERLOAD, VFD-RATED. MIN. 70% EFFICIENCY (<1 HP).
F. BEARINGS: AIR HANDLING QUALITY WITH L-10 OF 80,000 HOURS AT MAXIMUM OPERATING SPEED, ZERK FITTINGS.
G. ACCESSORIES:
1. INLET GUARD
2. OUTLET GUARD
3. UNIVERSAL MOUNTING SUPPORT
4. POLYESTER URETHANE OR EQUAL COATING

4.11 VANE AXIAL INLINE FANS

A. CAPACITIES: SEE HVAC SCHEDULE
B. DISCHARGE POSITION: HORIZONTAL
C. HOUSING: CONTINUOUSLY WELDED STEEL WITH INTEGRAL FLANGES, MOUNTING SYSTEM, INSPECTION DOOR, AND OHSA-COMPLIANT GUARDS.
D. ROTOR BLADES AND HUB TO BE HEAT TREATED CAST ALUMINUM ALLOY A356-T6 OR EQUAL, MANUALLY AJUSTABLE.
E. MOTOR: TEFC NEMA EFFICIENCY MOTOR, CLASS B OR GREATER INSULATION, THERMAL OVERLOAD, VFD-RATED. MIN. 70% EFFICIENCY (<1 HP).
F. BEARINGS: AIR HANDLING QUALITY WITH L-10 OF 80,000 HOURS AT MAXIMUM OPERATING SPEED, ZERK FITTINGS.
G. ACCESSORIES:
1. INLET GUARD
2. OUTLET GUARD
3. UNIVERSAL MOUNTING SUPPORT
4. POLYESTER URETHANE OR EQUAL COATING
5. THRUST RESTRAINTS

4.12 SIDEWALL FANS

B. DESCRIPTION: DIRECT-DRIVEN PROPELLER FANS CONSISTING OF FAN BLADES, HUB, MOTOR, DRIVE ASSEMBLY, AND ACCESSORIES.
C. CAPACITIES: SEE HVAC SCHEDULE
D. HOUSING: GALVANIZED-STEEL SHEET OR ALUMINUM WITH FLANGED EDGES AND INTEGRAL ORIFICE RING WITH BAKED-POLYESTER POWDER COAT FINISH.
E. STEEL FAN WHEELS: HIGH EFFICIENCY, FORMED-STEEL OR ALUMINUM
F. MOTOR: TENV ENCLOSURE, VARIABLE SPEED
G. DRIVE: DIRECT
H. ACCESSORIES:
1. GRAVITY DAMPER
2. OHSA-APPROVED MOTOR SIDE GUARD
3. DAMPER GUARD
4. SPEED CONTROL

4.13 COMBINATION LOUVERS

A. CONTRACTOR SHALL PROVIDE, RECEIVE, STORE, HANDLE, SET IN PENETRATION, FLASH & SEAL, ALIGN, TAG, WIRE AND OTHERWISE INSTALL AND START-UP DAMPERS.
B. PERFORMANCE REQUIREMENTS: SEE HVAC SCHEDULE
C. FRAME SHALL BE 6" DEEP, 0.125" ALUMINUM
D. BLADES SHALL BE 0.081" ALUMINUM
E. AXLES: ½" DIAMETER PLATED STEEL.
F. LINKAGE: PLATED STEEL BRACKETS, BRASS BARRELS, AND 5/16" DIAMETER PLATED STEEL LINKAGE ROD.
G. COATING: ENAMEL
H. STANDARD OF ACCEPTANCE: SEE HVAC SCHEDULE
I. ACCESSORIES:
1. FILTER: WASHABLE ALUMINUM MEDIA WITH 2" FORMED ALUMINUM FRAME MEETING THE REQUIREMENTS OF ASTM F872
2. INSECT SCREEN
3. ACTUATOR: HONEYWELL MS4120F1204 IN BELIMO ZS-260 HOUSING.

4.14 DAMPERS - MOTORIZED

A. CONTRACTOR SHALL PROVIDE, RECEIVE, STORE, HANDLE, SET IN PENETRATION, FLASH & SEAL, ALIGN, TAG, WIRE AND OTHERWISE INSTALL AND START-UP DAMPERS.
B. PERFORMANCE REQUIREMENTS: SEE HVAC SCHEDULE
C. FRAME SHALL BE 5" DEEP, 16 GAUGE GALVANIZED STEEL HAT CHANNEL.
D. BLADES SHALL BE 16 GAUGE GALVANIZED STEEL.
E. SEALS: TPE FASTENED TO EACH BLADE
F. LINKAGE: PLATED STEEL BRACKETS, BRASS BARRELS, AND 5/16" DIAMETER PLATED STEEL LINKAGE ROD.
G. AXLES: ½" DIAMETER PLATED STEEL.
H. COATING: ENAMEL
I. STANDARD OF ACCEPTANCE: SEE HVAC SCHEDULE
J. ACCESSORIES:
1. FILTER: 2" FILTERS WITH FILTER MOUNTS (SUPPLY ONLY).
2. ACTUATOR: HONEYWELL MS4120F1204 IN NEMA 4 HOUSING.

4.15 DAMPERS - BACKDRAFT

A. CONTRACTOR SHALL PROVIDE, RECEIVE, STORE, HANDLE, SET IN PENETRATION, FLASH & SEAL, ALIGN, TAG, WIRE AND OTHERWISE INSTALL AND START-UP DAMPERS.
B. PERFORMANCE REQUIREMENTS: SEE HVAC SCHEDULE
C. FRAME: EXTRUDED ALUMINUM OR GALVANIZED STEEL
D. BLADES: EXTRUDED ALUMINUM OR GALVANIZED STEEL.
E. SEALS: VINYL
F. LINKAGE: PLATED STEEL.
G. STANDARD OF ACCEPTANCE: SEE HVAC SCHEDULE
H. ACCESSORIES:
1. SCREEN (EXTERIOR MOUNTING ONLY)
2. STATIC PRESSURE CONTROL (SUPPLY DAMPERS ONLY)

4.16 SUPPLY GRILLS

A. TYPE: SEE HVAC SHEDULE
B. FRAME: 20 GAUGE STEEL BORDER
C. BLADES: ALUMINUM
D. FINISH: WHITE ANODIC ACRYLIC PAINT
E. MANUFACTURER: TITUS AEROBLADE SERIES
F. ACCESSORIES:
1. TITUS AG-35 DAMPER (WHERE SPECIFIED ON HVAC SCHEDULE)
2. 24" X 24" CEILING MODULE (WHERE SPECIFIED ON HVAC SCHEDULE)

4.17 SUPPLY DIFFUSERS

A. TYPE: SEE HVAC SHEDULE
B. FRAME: 20 GAUGE STEEL BORDER
C. BLADES: ALUMINUM
D. FINISH: WHITE ANODIC ACRYLIC PAINT
E. MANUFACTURER: TITUS TMR/TMS
F. ACCESSORIES:
1. TITUS AG-35 DAMPER (WHERE SPECIFIED ON HVAC SCHEDULE)
2. 24" X 24" CEILING MODULE (WHERE SPECIFIED ON HVAC SCHEDULE)

4.18 RETURN GRILL - LOUVERED

A. TYPE: SEE HVAC SCHEDULE
B. FABRICATION: STEEL BORDER AND ALUMINIM BLADES/CORE
C. FINISH: WHITE ANODIC ACRYLIC PAINT
D. STANDARD OF ACCEPTANCE: TITUS 350ZRL

4.19 RETURN GRILL – AIR FOIL

A. TYPE: SEE HVAC SCHEDULE
B. FABRICATION: STEEL BORDER AND ALUMINIM BLADES/CORE
C. FINISH: WHITE ANODIC ACRYLIC PAINT
D. STANDARD OF ACCEPTANCE: TITUS 25RL

4.20 RETURN GRILL - EGGGRATE

A. TYPE: 1" CORE
B. FABRICATION: 304 STAINLESS STEEL FRAME AND CORE.
C. STANDARD OF ACCEPTANCE: TITUS 50R-SS

4.21 TEMPERATURE SENSOR & TRANSMITTER

A. SENSOR
1. TYPE: RTD
2. CLASS: A
3. TYPE: THIN FILM
4. INSERTION LENGTH: 2"
5. INSERT DIAMETER: ¼"
6. CONNECTION: ½" MALE NPT
7. ELEMENT: PLATINUM
8. HEAD TYPE: INDUSTRIAL
9. HEAD MATERIALS OF CONSTRUCTION: MATCHING TRANSMITTER
10. CONFIGURATION: 3-WIRE
11. HAZARDOUS ENVIRONMENT: CLASS 1, DIVISION 2, GROUP D
C. TRANSMITTER/CONTROLLER
1. CONFIGURATION: TO MATCH SENSOR TYPE
2. UNIT READINGS: USER SELECTABLE – °F OR °C
4. POWER REQUIREMENTS: 24VDC
5. DISPLAY: GRAPHIC LCD/LED.
6. INPUTS: 3-WIRE FROM RTD
6. ANALOG OUTPUTS: 4-20MA
7. OUTPUT RANGE: USER SETTABLE
7. FAILURE MODE: FAIL TO 4-MA OUTPUT.
8. ENCLOSURE: ALUMINUM OR STAINLESS STEEL
9. HAZARDOUS ENVIRONMENT: CLASS 1, DIVISION 2, GROUP D
9. MEMORY BACKUP: ALL USER SETTINGS SHALL BE RETAINED INDEFINITELY IN MEMORY
D. STANDARDS OF ACCEPTANCE:
1. SENSOR: ROSEMOUNT 214CRTSMB1S3E*SLE5*
2. SENSOR: ROSEMOUNT 3144PD1A1E5M5*Q4

ROBERT A. ADAMS REGISTERED NO. 062-054119 STATE OF ILLINOIS PROFESSIONAL ENGINEER
12/20/19
EXP: 11/30/21

REV	DATE	BY	DESCRIPTION
5			
4			
3			
2			
1	10-9-20	RAA	ISSUED FOR CONSTRUCTION

SCALE: NONE
DATE: 12-11-19
DRAWN: JFD
CHECKED: RFC
APPROVED: RAA

ACEng
www.ac-engineering.com
Adams & Christensen Engineering, Inc.
782 Wexford Ct., Grayslake, IL 60030
Illinois Design Firm #184.006676-0002

CLIENT
GREEN ERA SUSTAINABILITY, LLC
ANAEROBIC DIGESTER PROJECT
650 W. 83RD STREET
CHICAGO, IL. 60620

DESCRIPTION
HVAC NOTES & SPECIFICATIONS
EQUIPMENT (2 OF 3)

PROJECT NO:
1019.001

SHEET:
M-705

4.22 SPLIT SYSTEM - CONDENSING UNITS

A. TYPE: SEE HVAC SCHEDULE
B. CAPACITY: SEE HVAC SCHEDULE
C. GENERAL:
   1. CERTIFIED AND RATED IN ACCORDANCE WITH AHRI AND DOE STANDARDS.
   2. CERTIFIED FOR UL 1995.
D. HOUSING
   1. GALVANIZED STEEL.
E. ELECTRICAL: 208/230VAC
F. REFRIGERANT: R410A
G. COMPRESSOR: SCROLL HERMETIC
H. ACCESSORIES.
   1. OUTLET AIR GUIDES
   2. WIND BAFFLES
I. STANDARD OF ACCEPTANCE: TRANE ST SERIES

4.23 SPLIT SYSTEM - AIR HANDLERS

A. TYPE: SEE HVAC SCHEDULE
B. CAPACITY: SEE HVAC SCHEDULE
C. MOUNTING: SEE HVAC SCHEDULE
D. ORIENTATION: HORIZONTAL
E. ELECTRICAL: 208/230VAC, 1 PH
F. REFRIGERANT: R410A
G. EVAPORATIVE COIL
   1. COPPER TUBE, TYPE K, WITH ALUMINUM PLATE FINS.
H. STANDARD OF ACCEPTANCE: TRANE NTYW
I. FILTERS: POLYPROPYLENE HONEYCOMB
J. ACCESSORIES
   1. ELECTRIC HEATERS WHERE IDENTIFIED ON THE HVAC SCHEDULE
   2. DISCHARGE PLENUM AND GRILLES WHERE IDENTIFIED ON THE HVAC SCHEDULE
   3. RETURN GRILLE
   4. STAINLESS STEEL VIBRATION ISOLATORS FOR SUSPENDED INSTALLATION
   5. EXTERNAL DRIP PAN

ROBERT A. ADAMS
REGISTERED
NO.
062-054119
STATE OF
ILLINOIS
PROFESSIONAL ENGINEER
12/20/19
EXP:
11/30/21

REV	DATE	BY	DESCRIPTION
E			
D			
C			
B			
A	10-9-20	RAA	ISSUED FOR CONSTRUCTION

SCALE: NONE
DATE: 12-11-19
DRAWN: JFD
CHECKED: RFC
APPROVED: RAA

ACEng
www.ac-engineering.com
Adams & Christensen Engineering, Inc.
782 Wexford Ct., Grayslake, IL 60030
Illinois Design Firm #184.006676-0002

CLIENT
GREEN ERA SUSTAINABILITY, LLC
ANAEROBIC DIGESTER PROJECT
650 W. 83RD STREET
CHICAGO, IL. 60620

DESCRIPTION
HVAC NOTES & SPECIFICATIONS
EQUIPMENT (3 OF 3)

PROJECT NO:
1019.001

SHEET:
M-706

FAN SCHEDULE

ID	LOCATION	TYPE	QTY	STANDARD		CAPACITY	PRESSURE	RPM	SIZE (IN)		POWER	MOTOR				ACCESSORIES				NOISE	WEIGHT
				MANUFACTURER	MODEL	(CFM)	(IN WC)		FAN	RO	(BHP)	HP	RPM	VOLTAGE	PHASE	HOOD	SCREEN	FILTER	DAMPER	(SONES)	(LBS)
EF-901	SHOP WATER CLOSET CEILING	EXHAUST	1	GREENHECK	SP-A50	84	0.0012	700	6"	--	0.29 (FLA)	18W	--	115	1	YES	--	--	--	0.4	12
EF-941A	MECHANICAL ROOM	EXHAUST	1	GREENHECK	TBI-FS-4H36-200	22,000	1.637	1682 (VAR)	36"	--	16.46	20	1725	460	3	IN & OUT	--	--	--	94dBA	825
EF-952	BELT PRESS AREA	EXHAUST	1	GREENHECK	VAB-36F14-II-300	26,400	3.532	1873 (VAR)	36"	--	25.72	30	1725	460	3	--	--	--	--	95dBA	1618
EF-953	PROCESS ROOM	EXHAUST	1	GREENHECK	VAB-36F14-II-500	33,600	3.861	2160 (VAR)	36"	--	38.15	50	1725	460	3	--	--	--	--	100dBA	1883
EF-960	DOCK PIER WALL	EXHAUST	1	GREENHECK	SE1-10-440VG	288	0.042	724	10"	12 1/2" SQ	0.01	1/6	1725	115	1	--	--	--	--	1.1	42

UNIT HEATER SCHEDULE

ID	LOCATION	TYPE	QTY	MOUNTING	STANDARD		CAPACITY	AIR FLOW	FUEL	ELECTRICAL			THERMOSTAT	EFFICIENCY	MOUNTING	WEIGHT
					MANUFACTURER	MODEL	(BTU/HR)	(CFM)		AMPS	VOLTAGE	PHASE		(%)	HEIGHT	(LBS)
HTR-913	ELECTRICAL ROOM 2	BLUE FLAME	1	WALL OR CEILING	HARTHRITE	HB30TN	30,000	--	NATURAL GAS	--	--	--	MFG. STD.	99%	10'	44
HTR-943	MECHANICAL ROOM	BLUE FLAME	1	WALL OR CEILING	HARTHRITE	HB30TN	30,000	--	NATURAL GAS	--	--	--	MFG. STD.	99%	10'	44
HTR-962	DOCK PIER	BLUE FLAME	1	WALL OR CEILING	HARTHRITE	HB30TN	30,000	--	NATURAL GAS	--	--	--	MFG. STD.	99%	10'	44
HTR-980	FIRE PUMP AREA	BLUE FLAME	1	WALL OR CEILING	HARTHRITE	HB30TN	30,000	--	NATURAL GAS	--	--	--	MFG. STD.	99%	10'	44

AIR HANDLERS

ID	LOCATION	TYPE	QTY	MOUNTING	STANDARD		AIR FLOW				HEATER				ELECTRICAL				WEIGHT
					MANUFACTURER	MODEL	CAPACITY (CFM)	PRESSURE (IN WC)	MOTOR (HP)	SPEED	FUEL	TYPE	CAPACITY (BTU/HR)	EFFICIENCY	MCA/HP	MOP	VOLTAGE	PHASE	(LBS)
MAU-950	PROCESS AREA	MAKE-UP	1	OUTDOOR/GROUND	GREENHECK	DGX-P227-H38-II	29,856	2.51	2 @ 20 HP	CONSTANT	NATURAL GAS	DIRECT FIRE	2,208,000	92%	68.4 MCA	80	460	3	3,779
MAU-951	PROCESS AREA	MAKE-UP	1	OUTDOOR/GROUND	GREENHECK	DGX-P227-H38-II	29,856	2.51	2 @ 20 HP	CONSTANT	NATURAL GAS	DIRECT FIRE	2,208,000	92%	68.4 MCA	80	460	3	3,779
AH-954A-C	PROCESS AREA	INDOOR	3	ROOF/CEILING	GREENHECK	DG-112-H10	4,000	3.14	5 HP	CONSTANT	NATURAL GAS	DIRECT FIRE	259,200	92%	9.8 MCA	15	460	3	605

HEATING AND COOLING UNIT SCHEDULE

ID	LOCATION	TYPE	MANUFACTURER	ROOFTOP MODEL #	HEATER MODEL #	OUTDOOR AIR FLOW (CFM)	INDOOR FAN				HEATING CAPACITY		COOLING CAPACITY				POWER EXHAUST			EFFICIENCY		ELECTRICAL		WEIGHT (LBS)	NOTES
							CAPACITY (CFM)	PRESSURE (IN WC)	SPEED (RPM)	MOTOR SIZE (HP)	(BTU/HR)	(KW)	SENSIBLE (BTU/HR)	TOTAL (BTU/HR)	MIN. TONS REQUIRED	REFRIGERANT TYPE	REFRIGERANT CHARGE	FLOW (CFM)	PRESSURE (IN WC)	MOTOR SIZE (HP)	COOLING	HEATING (COP / %)	VOLTAGE	PHASE		
RTU-900	SHOP OFFICE AREA	RTU - AIR CONDITIONER	TRANE	YHC120F4*LA**K7*A0C0B100CHB00	LOW HEAT	570	3,399	1.23	1,432 (VAR)	2.75 HP (STANDARD)	123,000	36.0	85,250	107,710	10.0	R-410A	12.1 POUNDS	486	0.33	0.87 HP	12.4 EER	80%	460	3	1,647	1, 2, 3, 4, 5, 7

SPLIT SYSTEM AIR CONDITIONERS

CONDENSORS

ID	LOCATION	TYPE	MANUFACTURER	MODEL	RATED CAPACITY (BTU/HR)	COOLING			HEATING		SYSTEM EFF.	ELECTRICAL			WEIGHT (LBS)	NOTES
						SENSIBLE LOAD (BTU/HR)	TOTAL LOAD (BTU/HR)	REFRIGERANT TYPE / CHARGE	TYPE	CAPACITY (BTU/HR)	EFF.	MCA	VOLTAGE	PHASE		
CU-910	ELECTRICAL ROOM 2	SPLIT - OUTDOOR	MITSUBISHI ELECTRIC	NTYSST36A112AA	34,600	32,400	34,600	R-410A / 4 POUNDS	--	--	--	21.0	208/230	1	126	1

AIR HANDLER

ID	LOCATION	TYPE	QTY	MOUNTING	MANUFACTURER	MODEL	CAPACITY			ELECTRICAL			WEIGHT (LBS)	NOTES
							COOLING (BTU/HR)	HEATING (BTU/HR)	AIR FLOW (CFM	MCA	VOLTAGE	PHASE		
AHU-911	ELECTRICAL ROOM 2	SPLIT - INDOOR	1	WALL	MITSUBISHI ELECTRIC	NTYWST36A112AA	34,600	--	389-887	1.00	208/230	1	40	1

HEATING & COOLING NOTES:

1. PROVIDE ONE 7 DAY ELECTRIC PROGRAMMABLE THERMOSTAT IN EACH CONDITIONED ZONE. PROGRAMMED FOR COMPLIANCE WITH SPECIFIED ENERGY EFFICIENCY CODE.
2. HVAC CONTRACTOR TO PROVIDE AND INSTALL A RETURN AIR SMOKE DETECTOR FROM TRANE. DETECTOR SHALL SHUTDOWN THE UNIT IMMEDIATELY UPON DETECTION OF FIRE.
3. HVAC CONTRACTOR TO PROVIDE LOW-LEAK, DRY-BULB ECONOMIZER WITH BAROMETRIC RELIEF DAMPER DIRECT FROM TRANE.
4. HVAC CONTRACTOR TO PROVIDE LOW-LEAK, DRY-BULB ECONOMIZER WITH POWERED EXHAUST DIRECT FROM TRANE.
5. SEE SHEET M-704 FOR SPECIFICATIONS AND ADDITIONAL ACCESSORIES.
6. PROVIDE ONE ZONE CONTROLLER (HONEYWELL HZ432 TRUEZONE PANEL) TO CONTROL INTEGRATION OF THE THERMOSTATS, THE DUCT ZONE DAMPER ACTUATORS, AND THE RTU.
7. REFER TO TRANE PRODUCT CATALOG, PACKAGED ROOFTOP AIR CONDITIONERS, PRECEDENT COOLING AND GAS/ELECTRIC, 3 TO 10 TONS - 60 HZ, RT-PRC023AT-EN, JANUARY 2020 FOR ADDITIONAL INFORMATION.
8. REFER TO TRANE PRODUCT CATALOG, PACKAGED ROOFTOP AIR CONDITIONERS, VOYAGER COMMERCIAL WITH RELIATEL CONTROLS INCLUDING ESTAGE, 27 1/2 TO 50 TONS - 60 HZ, RT-PRC033L-EN, MAY 2019 FOR ADDITIONAL INFORMATION.

GENERAL NOTES:

1. CAPACITY LISTED IS FOR EACH UNIT.
2. SEE SHEET M-700 UP TO M-709 FOR SPECIFICATIONS AND ADDITIONAL ACCESSORIES.
3. AIR HANDLERS WITH HEATING EACH TO HAVE DEDICATED THERMOSTAT.

ROBERT A. ADAMS
REGISTERED
NO.
062-054119
STATE OF
ILLINOIS
PROFESSIONAL ENGINEER
12/20/19
EXP:
11/30/21

REV	DATE	BY	DESCRIPTION
E			
D			
C			
B			
A	10-9-20	RAA	ISSUED FOR CONSTRUCTION

SCALE: NONE
DATE: 12-11-19
DRAWN: JFD
CHECKED: RFC
APPROVED: RAA

ACEng
www.ac-engineering.com
Adams & Christensen Engineering, Inc.
782 Wexford Ct., Grayslake, IL 60030
Illinois Design Firm #184.006676-0002

CLIENT
GREEN ERA SUSTAINABILITY, LLC
ANAEROBIC DIGESTER PROJECT
650 W. 83RD STREET
CHICAGO, IL. 60620

DESCRIPTION
HVAC SCHEDULES
(1 OF 2)

PROJECT NO:
1019.001

SHEET:
M-710

MOTORIZED DAMPER SCHEDULE

ID	LOCATION	TYPE	QTY	STANDARD		SIZE (IN. X IN.)	PERFORMANCE		MAX. DIFF. PRESSURE (" WC)	ACTUATOR				ACCESSORIES	
				MANUFACTURER	MODEL		FREE AREA (FT^2)	AIR FLOW (CFM)		QTY	STANDARD MANUFACTURER	STANDARD MODEL	VOLTAGE	SCREEN	FILTER
ED-941A	MECHANICAL ROOM / EF-941	EXHAUST	1	GREENHECK	VCD-23	42" x 42"	12.25	22,000	0.048	1	HONEYWELL	MS4120F1204	120VAC	BIRD	YES

COMBINATION LOUVER SCHEDULE

ID	LOCATION	TYPE	QTY	STANDARD		SIZE (IN. X IN.)	PERFORMANCE			MAX. DIFF. PRESSURE (" WC)	ACTUATOR				ACCESSORIES	
				MANUFACTURER	MODEL		FREE AREA (FT^2)	AIR FLOW (CFM)	VELOCITY (FPM)		QTY	STANDARD MANUFACTURER	STANDARD MODEL	VOLTAGE	SCREEN	FILTER
SD-942A	MECHANICAL ROOM	SUPPLY	1	GREENHECK	EACA-601	82" X 90"	27.49	22,000	800	0.070	2	HONEYWELL	MS4120F1204	120VAC	INSECT	YES
SD-961	DOCK PIER WALL	SUPPLY	1	GREENHECK	EACA-601	18" X 18"	0.58	288	497	0.03	1	HONEYWELL	MS4120F1204	120VAC	INSECT	YES

BACKDRAFT DAMPER SCHEDULE

ID	LOCATION	TYPE	QTY	STANDARD		SIZE (IN. X IN.)	FLANGE	SCREEN	AIR FLOW (CFM)	MAX. DIFF. PRESSURE (" WC)	STATIC PRESSURE CONTROL
				MANUFACTURER	MODEL						
GD-941A	MECHANICAL ROOM / EF-941	EXHAUST	1	GREENHECK	WD-110	42" x 42"	DISCHARGE	BIRD	22,000	0.717	--

SUPPLY REGISTERS/GRILLS/DIFFUSERS

ID	LOCATION	QUANTITY	MANUFACTURER	MODEL	TYPE	SIZE (IN. X IN.) OR (IN. DIA.)	AIR FLOW (CFM)	NOTES
SR-900	MAINTENANCE ROOM	3	TITUS	271RL	3/4" SINGLE AIR FOIL	18" X 6"	419	1, 2
SR-901	CENTER OFFICE	3	TITUS	TMR	ROUND CEILING DIFFUSER	10"	267	1, 2
SR-902	ELECTRICAL ROOM 1	3	TITUS	112RL	1 1/4" DOUBLE AIR FOIL	18" X 6"	419	1, 2
SR-903	SHOP WATER CLOSET	1	TITUS	TMR	ROUND CEILING DIFFUSER	6"	84	1, 2
SR-950	PROCESS ROOM	6	TITUS	121RS	2" SINGLE AIR FOIL	34" X 46"	9,952	1, 2
SR-954	PROCESS ROOM	3	TITUS	121RS	2" SINGLE AIR FOIL	18" X 36"	4,000	1, 2
RETURN GRILLES								
ID	LOCATION	QUANTITY	MANUFACTURER	MODEL	TYPE	SIZE (IN. X IN.) OR (IN. DIA.)	AIR FLOW (CFM)	NOTES
RG-900	MAINTENANCE ROOM	3	TITUS	25RL	AIR FOIL	12" X 10"	419	2
RG-901	SHOP OFFICE	1	TITUS	350ZRL	LOUVERED	14" X 14"	801	2
RG-902	ELECTRICAL ROOM 1	3	TITUS	25RL	AIR FOIL	12" X 10"	419	2
RG-952	BELT PRESS AREA	4	TITUS	50R-SS	1" EGGCRATE	30" X 30"	6,600	1, 2
RG-953	PROCESS ROOM	4	TITUS	50R-SS	1" EGGCRATE	48" X 24"	8,400	1, 2

REGISTER/GRILL NOTES:

1. SUPPLY AND INSTALL (DUCT MOUNTED) ONE TITUS AG-35 BUTTERFLY DAMPER.
2. THE CFM SPECIFIED IS PER REGISTER, GRILLE, DIFFUSER, DAMPER, OR LOUVER.
3. SUPPLY AND INSTALL 24" X 24" CEILING MODULE.

GENERAL NOTES:

1. CAPACITY LISTED IS FOR EACH UNIT.
2. SEE SHEET M-700 UP TO M-709 FOR SPECIFICATIONS AND ADDITIONAL ACCESSORIES.

ROBERT A. ADAMS REGISTERED NO. 062-054110 STATE OF ILLINOIS PROFESSIONAL ENGINEER
12/20/19
EXP: 11/30/21

REV	DATE	BY	DESCRIPTION
E			
D			
C			
B			
A	10-9-20	RAA	ISSUED FOR CONSTRUCTION

SCALE: NONE
DATE: 12-11-19
DRAWN: JFD
CHECKED: RFC
APPROVED: RAA

ACEng
www.ac-engineering.com
Adams & Christensen Engineering, Inc.
782 Wexford Ct., Grayslake, IL 60030
Illinois Design Firm #184.006676-0002

CLIENT
GREEN ERA SUSTAINABILITY, LLC
ANAEROBIC DIGESTER PROJECT
650 W. 83RD STREET
CHICAGO, IL. 60620

DESCRIPTION
HVAC SCHEDULES
(2 OF 2)

PROJECT NO:
1019.001

SHEET:
M-711

ROOM #	ROOM NAME	ROOM USE	FLOOR AREA	OURDOOR AIR				RECIRCULATION AIR	MECHANICAL EQUIPMENT			NOTES
				ORDINANCE REQUIREMENTS[1]		ACTUAL OUTDOOR AIR PROVIDED			SUPPLY	EXHAUST	RECIRCULATION	
				SUPPLY	EXHAUST	SUPPLY	EXHAUST					
			(SF)	(CFM)	(CFM)	(CFM)	(CFM)	(CFM)				
1.1	SHOP WC	TOILET ROOM	42	0	84	84	84	0	RTU-900	EF-901	--	
1.2	OFFICE	OFFICES & COMPUTER ROOMS	163	98	49	98	98	801	RTU-900	RTU-900	RTU-900	RTU-900 POWER EXHAUST AT 0.87 HP.
1.3	ELECTRICAL ROOM 1	STORAGE, INACTIVE	634	0	0	76	76	1,257	RTU-900	RTU-900	RTU-900	RTU-900 POWER EXHAUST AT 0.87 HP.
1.4	MAINTENANCE ROOM	WORKSHOP	260	312	312	312	312	1,257	RTU-900	RTU-900	RTU-900	RTU-900 POWER EXHAUST AT 0.87 HP.
3	ELECTRICAL ROOM 2	STORAGE, INACTIVE	549	0	0	0	0	887	--	--	AHU-911	
4	MECHANICAL ROOM	MECHANICAL ROOM	810	405	0	22,000	22,000	0	SD-942A	EF-941A	--	
5.1	DOCK PIER	STORAGE ACTIVE	450	225	225	288	288	0	SD-961	EF-360	--	
5.2	PROCESS ROOM	GARAGE, 6 OR MORE CARS	37,675	28,256	37,675	60,000	60,000	12,000	MAU-950 MAU-951	EF-952 EF-953	AH-954A AH-954B AH-954C	ROOM IS A RECEIVING AND UNLOADING AREA. TREAT AS GARAGE DUE TO VEHICLES ENTERING TO UNLOAD.

NOTES
1. VALUES ARE FROM TABLE 18-28-403.3 UNLESS NOTED OTHERWISE.

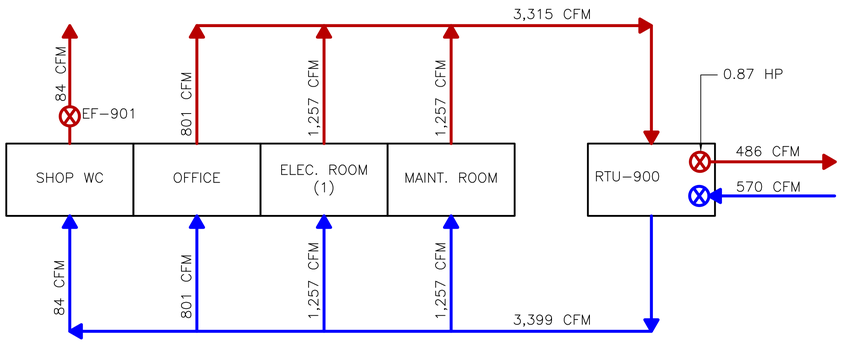

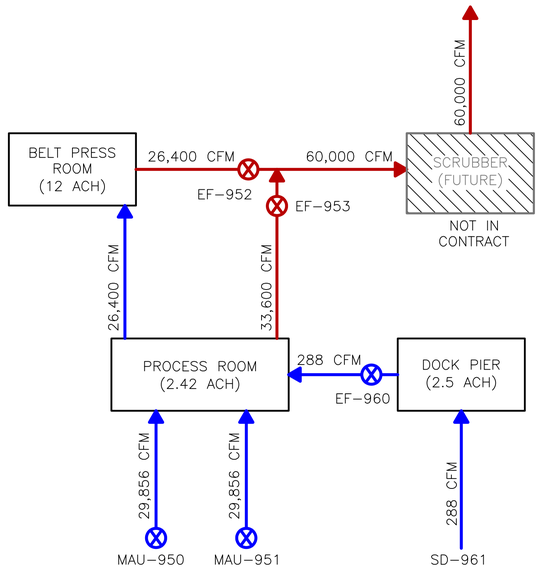

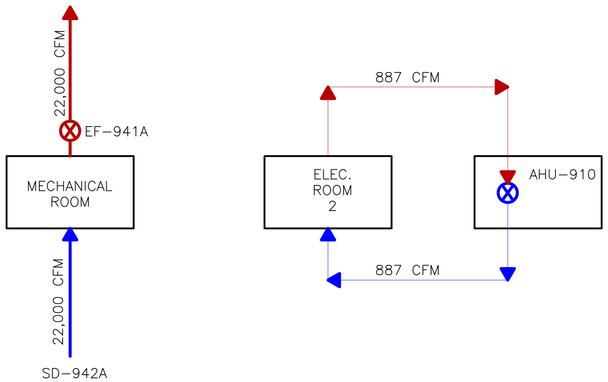

LEGEND:

VAV

FAN

ROBERT A. ADAMS REGISTERED NO. 062-054119 STATE OF ILLINOIS PROFESSIONAL ENGINEER
12/20/19
EXP: 11/30/21

REV	DATE	BY	DESCRIPTION
5			
4			
3			
2			
1	10-9-20	RAA	ISSUED FOR CONSTRUCTION

SCALE: NONE
DATE: 12-17-19
DRAWN: JFD
CHECKED: RFC
APPROVED: RAA

ACEng
www.ac-engineering.com
Adams & Christensen Engineering, Inc.
782 Wexford Ct., Grayslake, IL 60030
Illinois Design Firm #184.006676-0002

CLIENT
GREEN ERA SUSTAINABILITY, LLC
ANAEROBIC DIGESTER PROJECT
650 W. 83RD STREET
CHICAGO, IL. 60620

DESCRIPTION
BUILDING VENTILATION SCHEMATIC

PROJECT NO:
1019.001

SHEET:
M-720

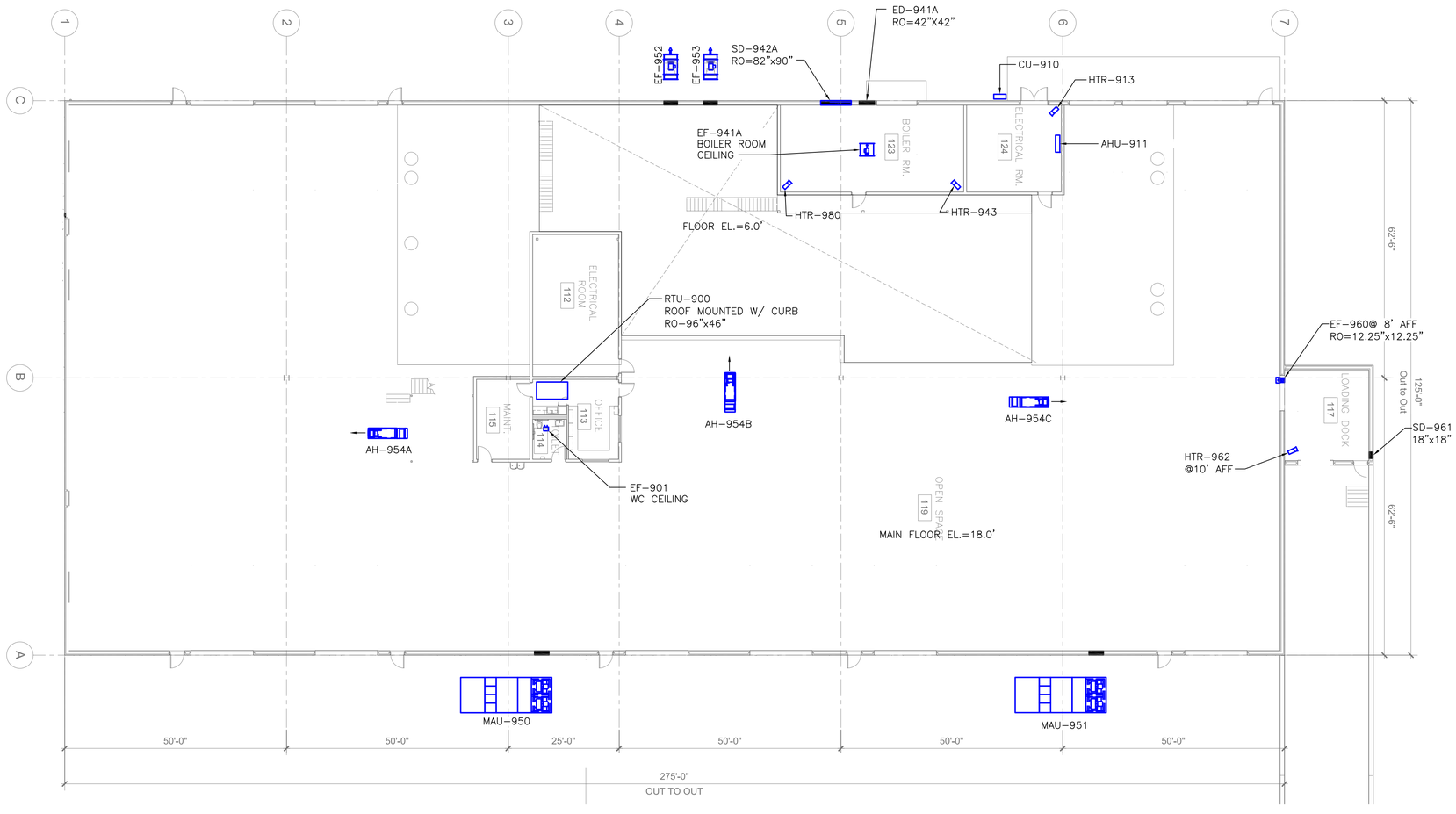

PLAN VIEW

0' 15' 30'

SCALE: 1"=15'

ROBERT A. ADAMS
REGISTERED
NO.
062-054119
STATE OF
ILLINOIS
PROFESSIONAL ENGINEER

12/20/19
EXP:
11/30/21

REV	DATE	BY	DESCRIPTION
E			
D			
C			
B			
A	10-9-20	RAA	ISSUED FOR CONSTRUCTION

SCALE: AS SHOWN
DATE: 11-5-18
DRAWN: JFD
CHECKED: RFC
APPROVED: RAA

ACEng
www.ac-engineering.com
Adams & Christensen Engineering, Inc.
782 Wexford Ct., Grayslake, IL 60030
Illinois Design Firm #184.006676-0002

CLIENT

GREEN ERA SUSTAINABILITY, LLC
ANAEROBIC DIGESTER PROJECT
650 W. 83RD STREET
CHICAGO, IL. 60620

DESCRIPTION

HVAC EQUIPMENT LOCATIONS

PROJECT NO:
1019.001

SHEET:
M-800

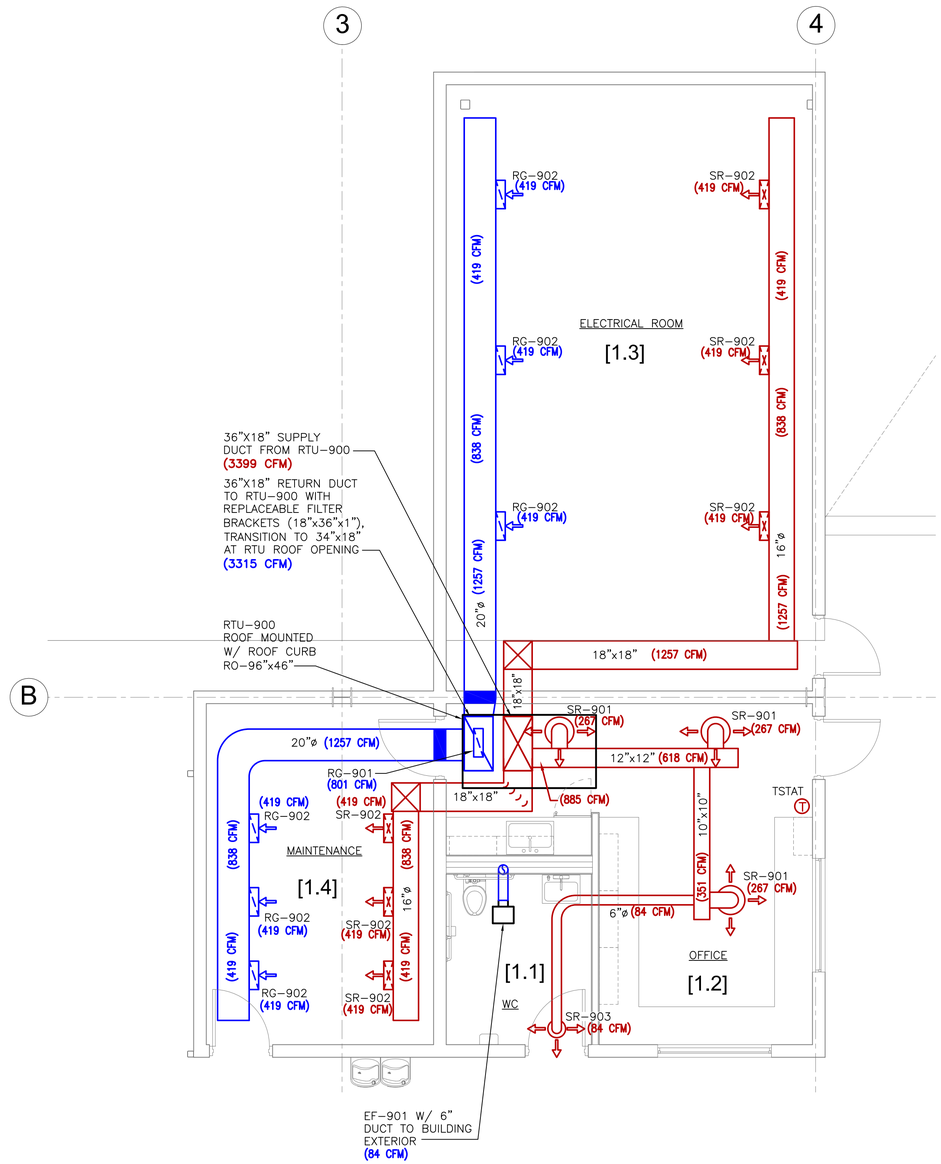

PLAN VIEW

0' 2' 4' 8'

SCALE: 1"=4'

(xxxx CFM)
(xxxx CFM)
CFM VALUES ADDED TO SUPPLY & RETURN

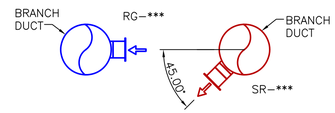

REGISTER & GRILL ORIENTATION

N.T.S.

NOTES:
1. SEE SUPPLY REGISTER/DIFFUSER AND RETURN GRILL SCHEDULES ON SHEET M-711 FOR SIZES AND AIR FLOWS FROM EACH ITEM.
2. SEE SHEET M-720 FOR AIR FLOW RATES TO EACH ROOM/AREA.
3. FINISHED FLOOR ELEVATION = 18.0'.

ROBERT A. ADAMS REGISTERED NO. 062-054119 STATE OF ILLINOIS PROFESSIONAL ENGINEER 12/20/19 EXP: 11/30/21

REV	DATE	BY	DESCRIPTION
4			
3			
2			
1			
A	10-9-20	RAA	ISSUED FOR CONSTRUCTION

SCALE: AS SHOWN
DATE: 11-5-18
DRAWN: JFD
CHECKED: RFC
APPROVED: RAA

ACEng
www.ac-engineering.com
Adams & Christensen Engineering, Inc.
782 Wexford Ct., Grayslake, IL 60030
Illinois Design Firm #184.006676-0002

CLIENT
GREEN ERA SUSTAINABILITY, LLC
ANAEROBIC DIGESTER PROJECT
650 W. 83RD STREET
CHICAGO, IL. 60620

DESCRIPTION
DUCT PLAN - CENTER ROOMS

PROJECT NO: 1019.001

SHEET: M-811

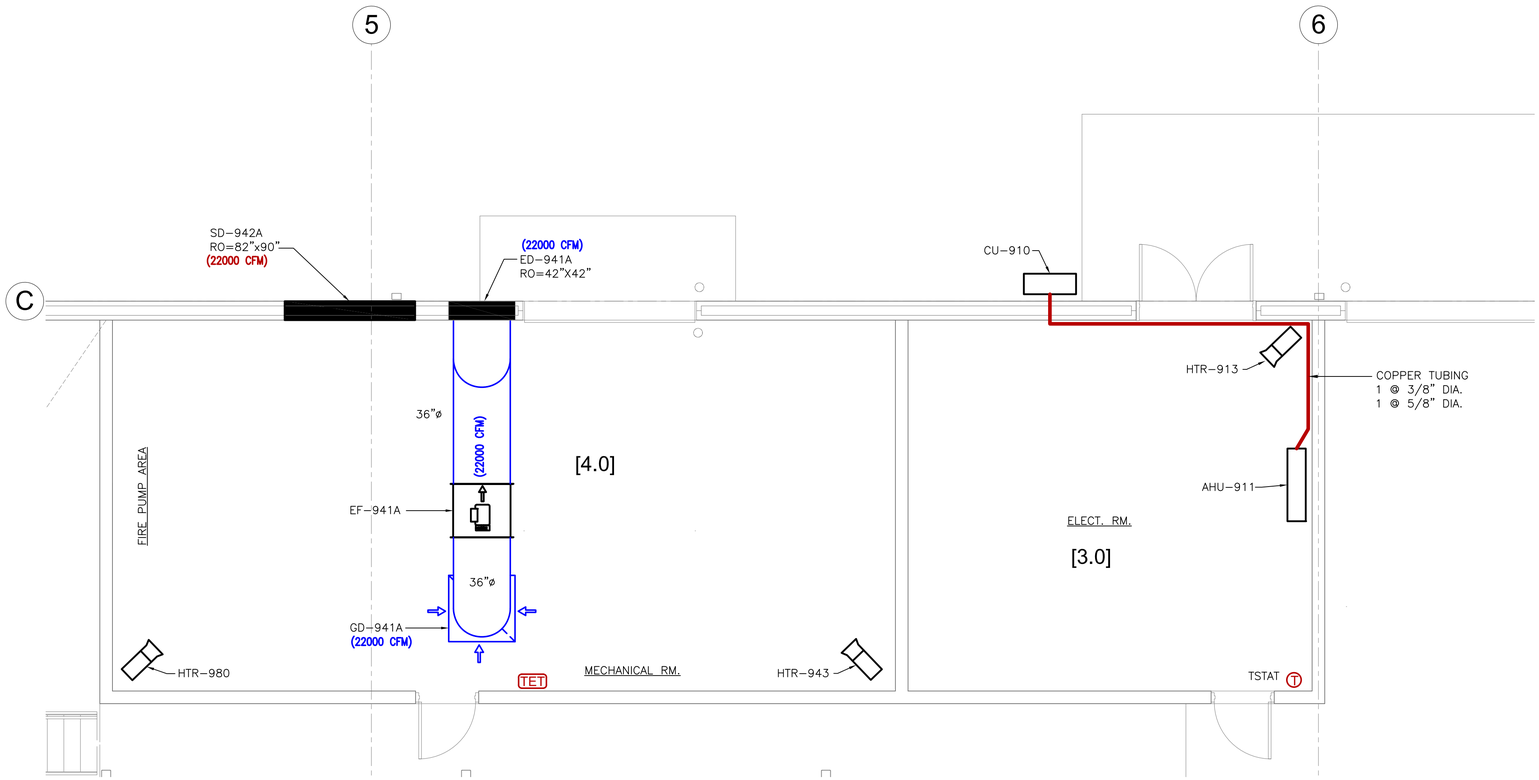

PLAN VIEW

0' 2' 4' 8'

SCALE: 1"=4'

(xxxx CFM)
(xxxx CFM)
CFM VALUES ADDED TO SUPPLY & RETURN/EXHAUST

NOTES:
1. TET: RTD-BASE TEMPERATURE ELEMENT & TRANSMITTER.
2. SEE SUPPLY REGISTER/DIFFUSER AND RETURN GRILL SCHEDULES ON SHEET M-711 FOR SIZES AND AIR FLOWS FROM EACH ITEM.
3. SEE SHEET M-720 FOR AIR FLOW RATES TO EACH ROOM/AREA.
4. FINISHED FLOOR ELEVATION = 18.0'.

ROBERT A. ADAMS REGISTERED NO. 062-054113 STATE OF ILLINOIS PROFESSIONAL ENGINEER 12/20/19 EXP: 11/30/21

REV	DATE	BY	DESCRIPTION
E			
D			
C			
B			
A	10-9-20	RAA	ISSUED FOR CONSTRUCTION

SCALE: AS SHOWN
DATE: 11-5-18
DRAWN: JFD
CHECKED: RFC
APPROVED: RAA

ACEng
www.ac-engineering.com
Adams & Christensen Engineering, Inc.
782 Wexford Ct., Grayslake, IL 60030
Illinois Design Firm #184.006676-0002

CLIENT
GREEN ERA SUSTAINABILITY, LLC
ANAEROBIC DIGESTER PROJECT
650 W. 83RD STREET
CHICAGO, IL. 60620

DESCRIPTION
DUCT PLAN – MECHANICAL ROOM & ELECTRICAL ROOM 2

PROJECT NO:
1019.001

SHEET:
M-812

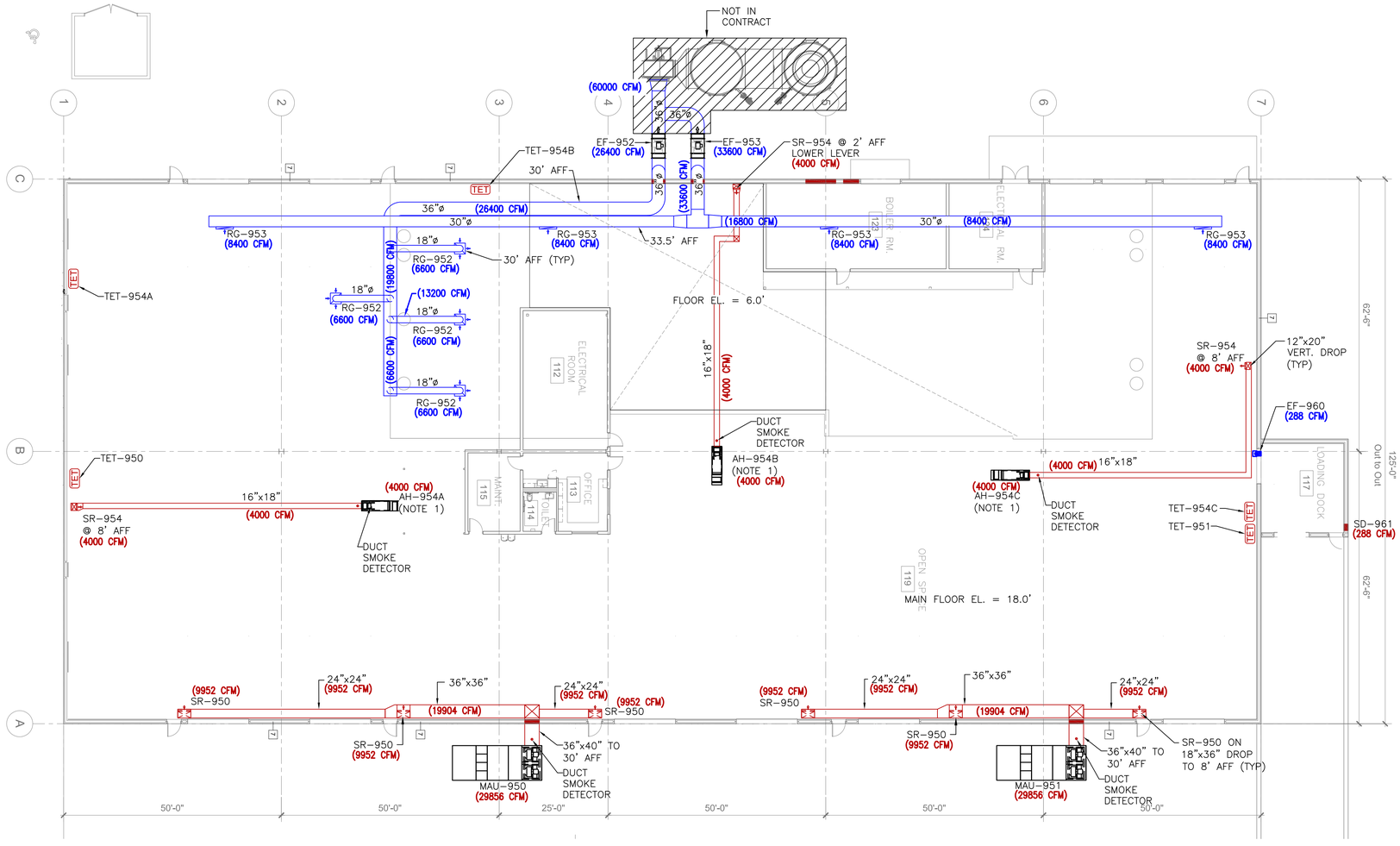

PLAN VIEW

0' 15' 30'

SCALE: 1"=15'

(xxxx CFM)
(xxxx CFM)
CFM VALUES ADDED TO SUPPLY & RETURN/EXHAUST

NOTES:
1. MOUNT AH-954X AS CLOSE TO CEILING AS POSSIBLE, RUN DUCT AS HIGH AS POSSIBLE TO SIDE WALL THEN DOWN TO 8' AFF. AH-954B DUCT GOES DOWN TO 2'AFF IN THE LOWER LEVEL/BASEMENT.
2. TET: RTD-BASE TEMPERATURE ELEMENT & TRANSMITTER.
3. SEE SUPPLY REGISTER/DIFFUSER AND RETURN GRILL SCHEDULES ON SHEET M-711 FOR SIZES AND AIR FLOWS FROM EACH ITEM.
4. SEE SHEET M-720 FOR AIR FLOW RATES TO EACH ROOM/AREA.

ROBERT A. ADAMS REGISTERED NO. 062-054119 STATE OF ILLINOIS PROFESSIONAL ENGINEER
12/20/19
EXP: 11/30/21

REV	DATE	BY	DESCRIPTION
E			
D			
C			
B			
A	10-9-20	RAA	ISSUED FOR CONSTRUCTION

SCALE:	AS SHOWN
DATE:	11-5-18
DRAWN:	JFD
CHECKED:	RFC
APPROVED:	RAA

ACEng
www.ac-engineering.com
Adams & Christensen Engineering, Inc.
782 Wexford Ct., Grayslake, IL 60030
Illinois Design Firm #184.006676-0002

CLIENT
GREEN ERA SUSTAINABILITY, LLC
ANAEROBIC DIGESTER PROJECT
650 W. 83RD STREET
CHICAGO, IL. 60620

DESCRIPTION
DUCT PLAN - PROCESS AREA

PROJECT NO: 1019.001

SHEET: M-813

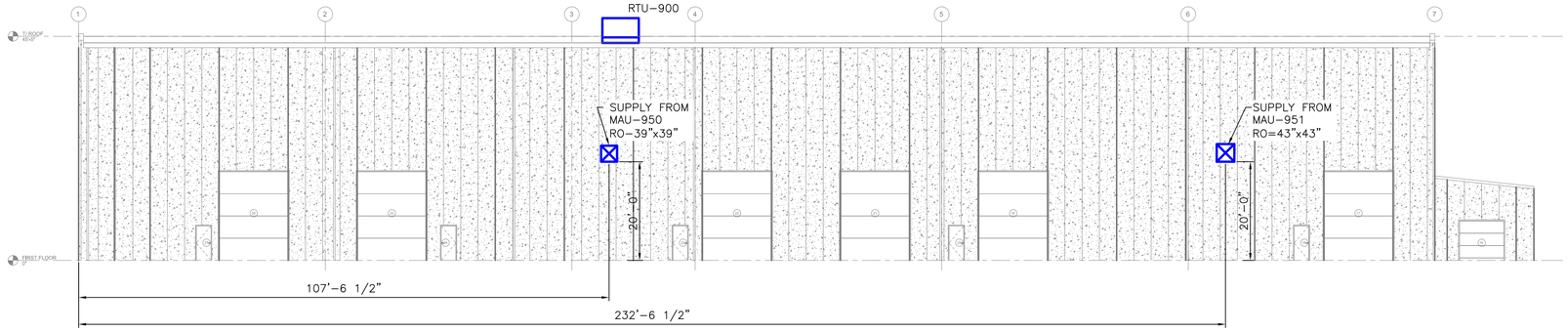

EAST ELEVATION

0' 15' 30'

SCALE: 1"=15'

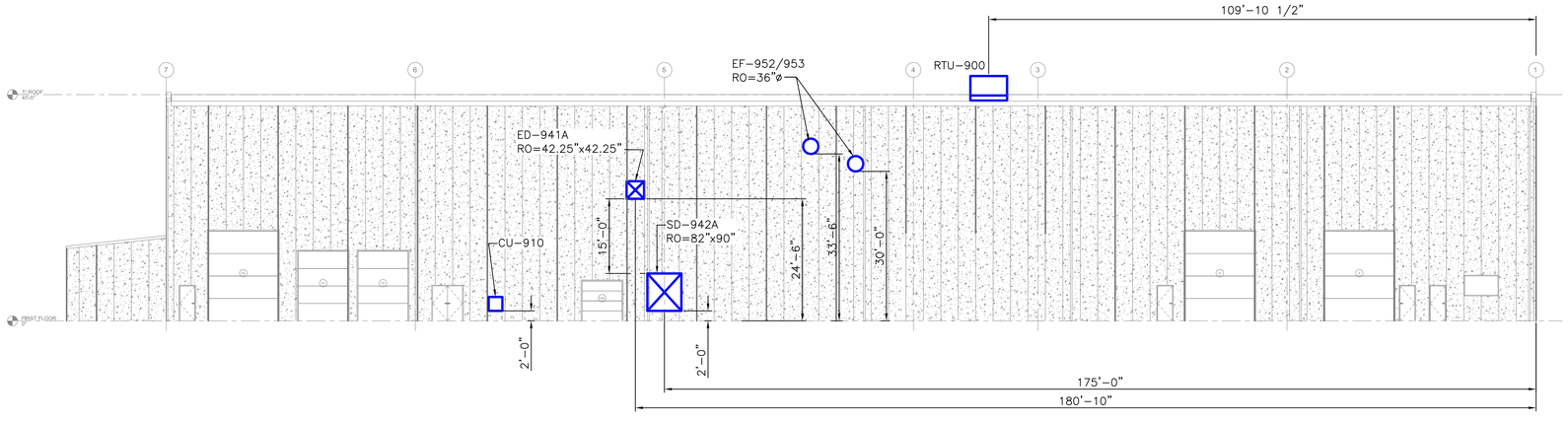

WEST ELEVATION

0' 15' 30'

SCALE: 1"=15'

ROBERT A. ADAMS
REGISTERED
NO.
062-054119
STATE OF
ILLINOIS
PROFESSIONAL ENGINEER
12/20/19
EXP:
11/30/21

REV	DATE	BY	DESCRIPTION
E			
D			
C			
B			
A	10–9–20	RAA	ISSUED FOR CONSTRUCTION

SCALE:	AS SHOWN
DATE:	12–11–19
DRAWN:	JFD
CHECKED:	RFC
APPROVED:	RAA

ACEng
www.ac–engineering.com

Adams & Christensen Engineering, Inc.
782 Wexford Ct., Grayslake, IL 60030
Illinois Design Firm #184.006676–0002

CLIENT

GREEN ERA SUSTAINABILITY, LLC
ANAEROBIC DIGESTER PROJECT
650 W. 83RD STREET
CHICAGO, IL. 60620

DESCRIPTION

HVAC ELEVATIONS (1 OF 2)

PROJECT NO:
1019.001

SHEET:
M–820

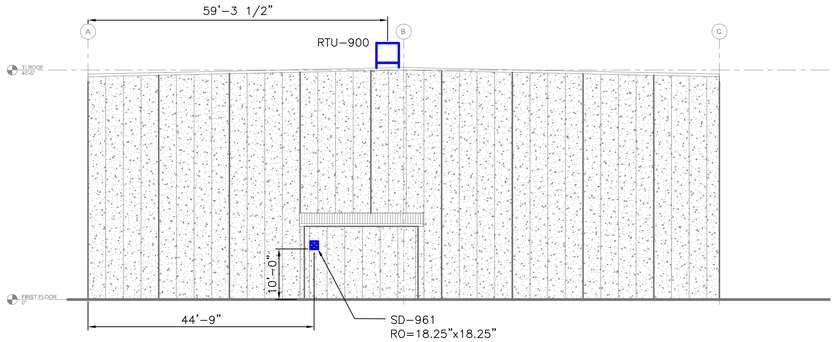

NORTH ELEVATION

0' 15' 30'

SCALE: 1"=15'

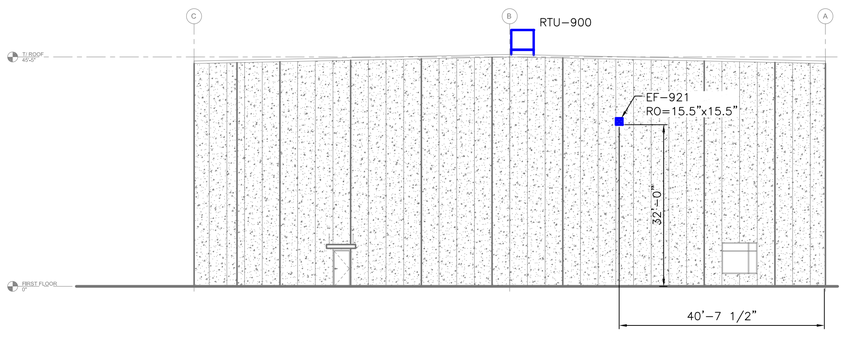

SOUTH ELEVATION

0' 15' 30'

SCALE: 1"=15'

ROBERT A. ADAMS
REGISTERED
NO.
062-054119
STATE OF
ILLINOIS
PROFESSIONAL ENGINEER

12/20/19
EXP:
11/30/21

REV	DATE	BY	DESCRIPTION
E			
D			
C			
B			
A	10-9-20	RAA	ISSUED FOR CONSTRUCTION

SCALE:	AS SHOWN
DATE:	10-20-18
DRAWN:	JFD
CHECKED:	RFC
APPROVED:	RAA

ACEng
www.ac-engineering.com
Adams & Christensen Engineering, Inc.
782 Wexford Ct., Grayslake, IL 60030
Illinois Design Firm #184.006676-0002

CLIENT

GREEN ERA SUSTAINABILITY, LLC
ANAEROBIC DIGESTER PROJECT
650 W. 83RD STREET
CHICAGO, IL. 60620

DESCRIPTION

HVAC ELEVATIONS (2 OF 2)

PROJECT NO:
1019.001

SHEET:
M-821

ODOR MONITORING PLAN

Doc. No. MP-09

Green Era

Organics Recycling Facility

650 W. 83rd Street

Cook County, Chicago, Illinois 60620

Prepared By

Green Arrow Engineering

2759 Long Road

Wooster, OH 44691

REVISION LEVEL	DESCRIPTION	ISSUE DATE
R0	INITIAL RELEASE	10/2/21
R1	SECTION 2.1 UPDATED AIR FLOW RATES. ADD TRAINING PLAN REFERENCE IN SECTION 8. ADDED TRAINING LOG DOC. REF.	10/25/21

Contents

1 Purpose 1
2 Self-Monitoring 1
2.1 Odor Emission Points 1
2.2 Odor Monitoring Locations 3
2.3 Odor Monitoring Frequency 5
2.4 Enhanced Odor Monitoring during the first year of operation 5
3 Odor Complaint Documentation 5
4 Actionable Response to Odor Observations 6
4.1 Mitigation Efforts 6
5 Odor Monitoring Procedure 6
5.1 Odor Observation Form 7
6 Training 7
7 Recordkeeping and Reporting 7
8 References 7

1 Purpose

This plan describes the procedures for Odor Monitoring and Surveillance.

2 Self-Monitoring

Green Era will implement a self-monitoring program for environmental odors to document odor occurrences and correlate detected odors with site activity, weather, and time of day to understand how to control and mitigate occurrences through operational changes. Odor monitoring will verify that control measures are effective in eliminating detectable odor emissions from the facility.

2.1 Odor Emission Points

The locations of potential odor emission points are mapped on the following site plan, "Potential Odor Emission Points". The primary control point will be the single exhaust stack from Building B-001 after the carbon bed. When both building fans are running, this will exhaust approximately 38,000 CFM of air from the building combined with 4,000 CFM of air from the ionization reactor for a total of 42,000 CFM. The building will be under negative pressure ventilation, but there is potential when overhead doors are opened for traffic that some odorous air could escape depending on the wind speeds and direction.

The waste gas flare and thermal oxidizer are designed to fully combust the waste gases and the exhaust should not have a detectable odor, but they are still a controlled emission point.

The bolted steel digester tank and feedstock storage tank in the tank yard both are protected from over pressurization and vacuum conditions by relief valves that are mounted to the roof. If biogas is not being removed from the tank by the gas upgrading equipment and/or flare as designed, raw biogas will be released from the pressure relief valves. Hydrogen sulfide will be the predominant odorant in the biogas and will likely be detectable offsite if raw biogas is released. Since the tanks are 50 feet tall, it is unlikely that biogas vented from the tank relief vents would be detected onsite by the plant operators. The plant operators will be aware of the venting from the plant SCADA and they will receive alarms both on the SCADA and mobile devices when the tank pressure rises prior to venting along with alarms for all gas handling equipment. Any periods when the tanks are vented (above the setpoint pressure of 8 in. WC) will be recorded in an electronic log.

An enclosed agricultural building (Pole Barn) is planned in the northwest corner of the site to support Urban Growers truck-farm operations and will provide space for equipment storage and bulk handling of cured compost products. Since any compost materials handled in this facility are fully stabilized and cured, we do not predict any objectionable odors from this building, but we will monitor for odors in this area.

Potential Odor Emission Points

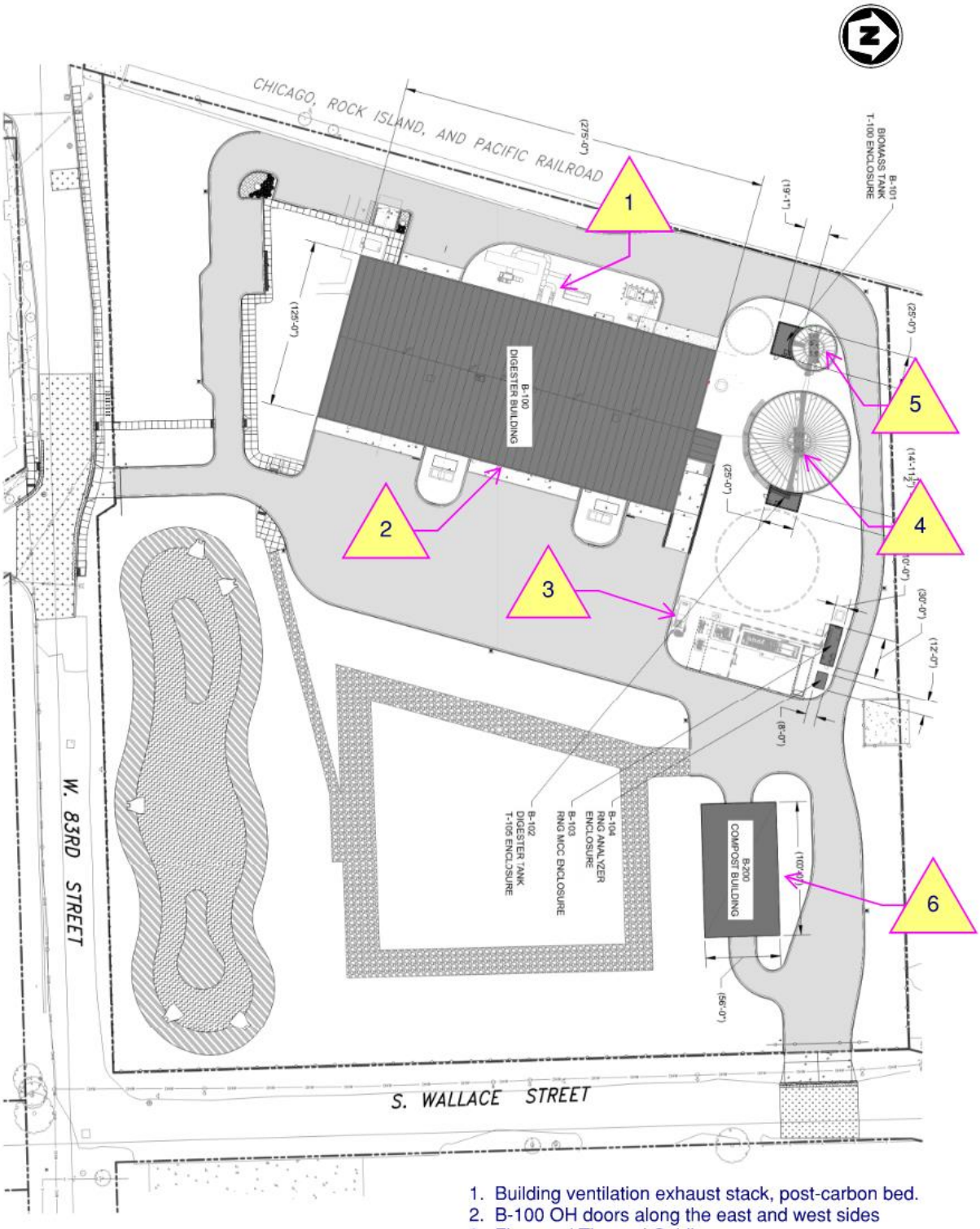

1. Building ventilation exhaust stack, post-carbon bed.
2. B-100 OH doors along the east and west sides
3. Flare and Thermal Oxidizer
4. T-105 (Digester Tank) Pressure Relief Valves
5. T-100 (Biomass Tank) Pressure Relief Valves
6. B-200 OH doors on east and west building ends

2.2 Odor Monitoring Locations

To establish baseline odor data from the food waste processing facility monitoring locations are selected around the site perimeter where observations will be recorded at normal intervals. The odor observations will be correlated with the weather conditions at the time when the observation is taken to note wind direction, wind speed, temperature, humidity, precipitation, and cloud cover. This way upwind and downwind odor observations are recorded.

The odor monitoring locations may be changed by the facility manager after baseline conditions are observed at start-up or at any point in time when changes in seasons, site activity, or operations have influenced detectable odor locations.

A planned odor monitoring route is proposed and shown on the Site Odor Monitoring Locations / Survey Route as follows. The monitor would start at on the east side of the building and proceed along the highlighted route towards the Wallace Street gate.

Initially, 6 checkpoint locations are proposed along the established route and observations will be recorded for these locations, even if no odor is detected. If odor is detectable at any other locations along the established route, those locations will be noted separately in the odor report log.

The 6 observation points are described below.

1. East side of the Operations Building
2. Wallace Street entrance
3. Corner of W 83rd and Wallace St.
4. W 83rd St Entrance
5. SW property line at drive.
6. NW property line at drive.

These locations may be marked with monuments or signage to ensure different observers follow the same route and record conditions at the same locations.

If odors complaints are received from offsite locations, additional offsite monitoring points may be added to the self-monitoring plan if odors from emission points follow a dispersion pattern that are not detectable onsite, but are detected offsite.

Site Odor Monitoring Locations / Survey Route

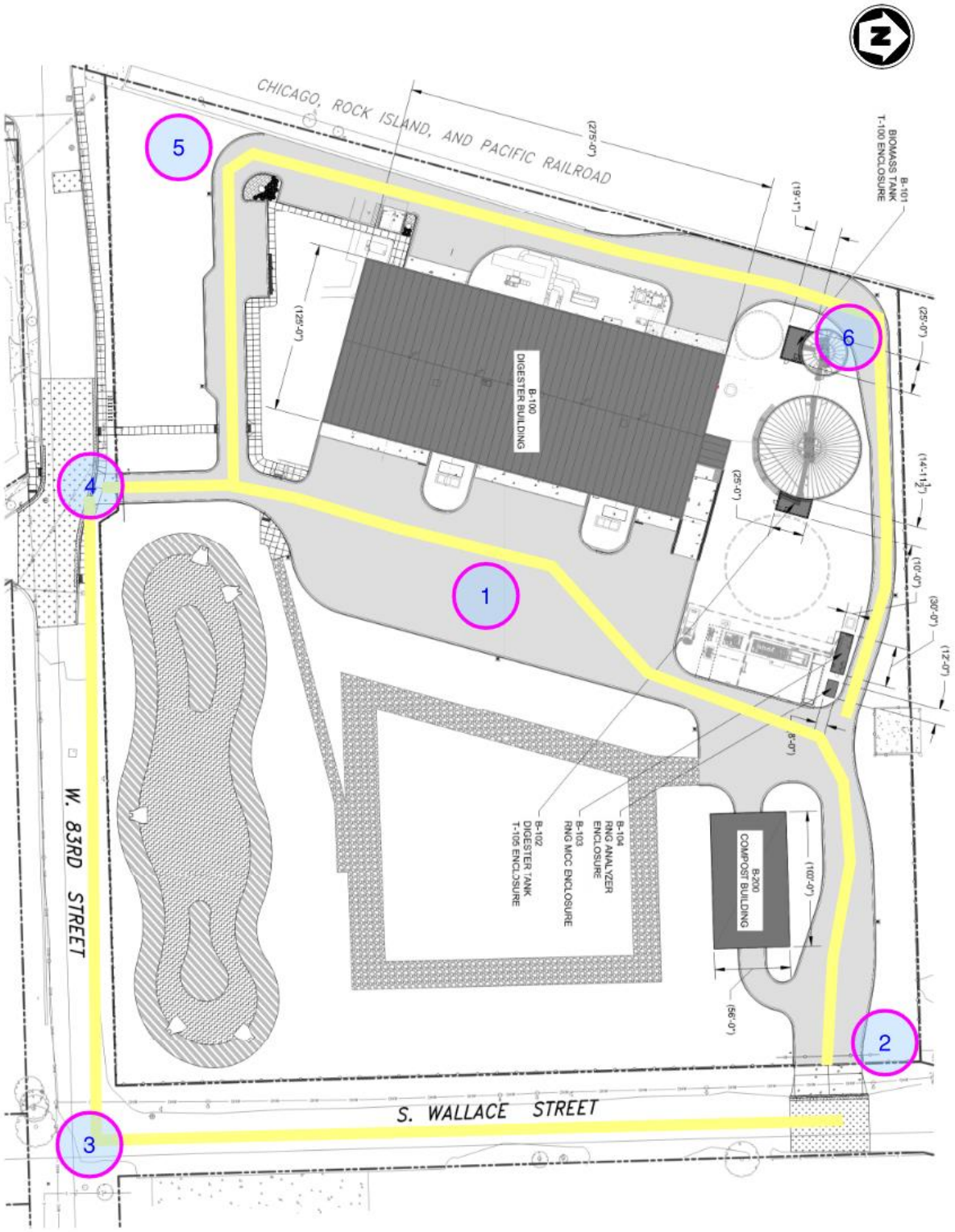

2.3 Odor Monitoring Frequency

Odor monitoring frequency will be determined by the plant management team (Plant Manager, Plant Engineer, Maintenance Mechanic, and Maintenance Engineer). Initially, odor observations will be taken at 7:00 and at 18:00 hours. Additional observation times may be added if odor is detected due to changes in site activity, weather conditions, or data from offsite receptors. The facility will be staffed 24/7 and these observations will be made daily. If no onsite odor is regularly detected, the monitoring frequency may be reduced.

The early morning observation is important because of usual calm winds and possible air inversion, when cooler air is present near the surface and warmer air is aloft. This temperature inversion can suppress normal convection currents and hold emissions close to the ground.

During the 18:00 hour observation, most waste processing activity will still be active inside the main facility. Since most people are home in the evenings and enjoying seasonal outdoor activities, if offsite odors are detected, the odors are most likely to be detected and reported within this timeframe. If an offsite odor complaint isn't reported the same day, the self-monitoring log can help establish what conditions led to the offsite odor and if any onsite observations could be effective in predicting the offsite occurrence.

2.4 Enhanced Odor Monitoring during the first year of operation

During the first year of operation, an additional odor observation will be made at 11:00 on days when waste is being received, Monday through Saturday.

Regular odor observations will be made during facility commissioning prior to and during intermittent processing activities that generate odorous air which is captured and processed through the odor control system. For example, digestate dewatering will only occur on one shift. To understand if dewatering affects onsite odors, odor observations downwind of the carbon bed outlet will be made prior to starting the belt presses, during dewatering, and after dewatering.

Waste processing activities with potential to produce odorous air:

- Dewatering
- Waste sorting/feedstock preparation
- Truck receiving
- Truck loading

If detectable odors are observed during certain site activities, mitigation efforts will be taken to reduce the odor from the operation or process. Green Era will maintain documentation of these observations and concurrent activity to establish an operational baseline. Weather observations will also be noted.

The monitoring frequency may be reduced after the first year of operation, provided that the facility demonstrates no offsite impacts to the surrounding area.

3 Odor Complaint Documentation

Odor complaints that are reported directly to Green Era or reported through other agencies will be documented in a searchable and sortable database or electronic log.

The following information will be entered with the record when available.

- Contact information
- Time and observed duration of occurrence(s)
- Location where the odor was observed (address or GPS)

- Odor description
- Any details on how the odor affected them.
- Verbatim transcription if available

Additionally, the record will be cross-referenced with weather conditions at the site at reported time of occurrence. The Green Era operator or manager should also note in the record any know site activity at the time that may have contributed to the source of the odor. The operator may identify possible causes in the record. Specific categories should be developed so that the records can be sorted for multiple occurrences from the same expected source.

Data will be recorded electronically whenever possible directly in the field through a tablet or smart-phone application. Paper records will be entered within one week of receipt into the electronic database. An Odor Complaint Form (*FORM-21-004*) has been prepared as a template for recording complaint details. Fields are provided for standard information that the investigator should record. This form may be filled out with a pen or completed electronically. Each Odor Complaint record should also be logged by date to track occurrences (*LOG-21-005*).

4 Actionable Response to Odor Observations

If odor is detected at the fence line through self-monitoring or from off-site complaints, a standard corrective action procedure will be followed to determine what steps will be taken to reduce occurrence and severity of the odor.

4.1 Mitigation Efforts

Odor monitoring is undertaken to evaluate the effectiveness of odor mitigation practices and control devices. If the planned odor mitigation strategies are found to be ineffective, another mitigation strategy will be planned and implemented. Consultation may be sought from outside experts with experience in odor control. This process will continue until the facility is successful in controlling nuisance odors.

Green Era will maintain full transparency through all steps of the decision-making process with stakeholders. This information may be conveyed in a timely manner through a public website, memorandums, and public meetings. The communication will address the following topics:

- Key-decision makers and experts involved in finding solutions
- Reasoning used in determining the next steps and selection of mitigation efforts
- Timing to implement
- Results of implementation, including accounting of odor occurrences and complaints

5 Odor Monitoring Procedure

The sense of smell is subjective. This operating procedure describes the common process to observe and describe odors on the Green Era site in a manner that is repeatable and comparable between different observers.

Starting at the prescribed time, drive or walk the current odor observation route from points 1 through 6. If driving with a truck or car or utility vehicle, proceed slowly (<5 MPH) and keep the driver's side window lowered to sense odor occurrences along the route outside of the designated locations. Park the vehicle at each posted location, walk away from the vehicle and breathe normally. If an odor is detected, use the Nasal Ranger to quantify the odor intensity per the Nasal Ranger work instructions. If applicable, also measure H2S concentration in parts per million.

Record the observations. Either use the paper forms or record on your mobile device in the designated application form. The form will follow a questionnaire type format with a limited number of choice descriptors. If

the source of the odor is known or suspected, note this in the record. Additional fields will be provided for your own notes. Type these notes or use your mobile device's built-in voice-to-text transcriber to enter data into this field. Photographs may also be attached to the record if needed. The record will be time stamped, so enter the notes while still at the observation point. After entering the observation, move to the next location. GPS coordinates for your position should be automatically recorded.

If odor is detected at other locations along the route, determine the perimeter of where the odor is noticeable and save additional records with your mobile device. Record as many observations as necessary to fully characterize the odor and affected area.

After completing the route, review the records either on your mobile device or on an office computer to correct any mistakes or amend records for clarity. Add current weather data to the records if not automatically entered by the system.

If an odor was observed, notify the appropriate plant personnel.

5.1 Odor Observation Form

An *Odor Observation Form* (*FORM-21-003*) has been prepared. The form may be filled out with a pen or completed electronically.

6 Training

All employees who work at the Facility to receive and process waste will be trained on this procedure per the *Personnel Training Plan (MP-04*). Specific practical training will be given on use of the Nasal Ranger and odor classification descriptors. *The Odor Control Plan (MP-08)* will be reviewed and explained at the same time. Training will be recorded using LOG-21-001.

7 Recordkeeping and Reporting

All records will be stored electronically and kept for at least 36-months from the record date. Records may be sent upon request to any regulatory agency of the City of Chicago or State of Illinois.

Notification may be required by some permits. The IEPA Air Permit Application will propose that when odor complaints are received, IEPA will be notified within 24-hrs, with follow-up within 7-days of actions conducted to address such odor complaints. Any additional permit requirements for notification or summary report submissions related to odor observations, odor complaints, equipment malfunction, or venting occurrences should be enumerated here.

8 References

a. MP-04 Personnel Training Plan
b. MP-08 Odor Control Plan
c. FORM-21-003 Odor Observation Form
d. LOG-21-001 Training Log
e. LOG-21-007 Air Emissions Venting Log
f. LOG-21-008 Air Emissions Control Equipment Maintenance Log

WASTE CONTROL PLAN
Doc. No. MP-10
Green Era
Organics Recycling Facility

650 W. 83rd Street
Cook County, Chicago, Illinois 60620

Prepared By
Green Arrow Engineering
2759 Long Road
Wooster, OH 44691

REVISION LEVEL	DESCRIPTION	ISSUE DATE
R0	INITIAL RELEASE	10/7/21
R1	DEFINED ADDITIONAL TERMS. UPDATED REFERENCES.	10/25/21

Table of Contents

1.0

Introduction 1

1.1 Purpose 1
1.2 Objectives 1
1.3 Definitions 2
1.4 Facility Operations 9
1.5 Facility Access and Site Security 12

Waste Characterization 13

2.1 Authorized Solid Waste 13
2.2 Unauthorized Waste 15

Waste Storage 16

Quality Control 18

4.1 Introduction 18
4.2 Control of Unauthorized Waste 19
4.2.1 Identification and Separation 19
4.2.2 Disposal 19
4.2.3 Recordkeeping 20
4.2.4 Prevention 20
4.3 Control of Hazardous Waste 21
4.3.1 Identification and Separation 21
4.3.2 Disposal 23
4.3.3 Recordkeeping 24
4.3.4 Prevention 24
4.4 Best Management Practices 25

List of Figures

Figure 1 – Hazardous Waste Disposal Process 22
Figure 2 – Hazardous Waste Notification Process 23

1.0
Introduction

1.1 Purpose

The *Waste Control Plan (MP-10)* describes the operational procedures to preclude the acceptance of unauthorized, regulated, and hazardous solid waste at the Green Era Organics Recycling Facility.

Only authorized waste will be accepted and treated by the Green Era Facility and these procedures ensure the proper handling and segregation of unauthorized and hazardous materials transported to the Facility.

1.2 Objectives

The *Waste Control Plan (MP-10)* establishes the procedures to ensure that only authorized waste is received, handled and disposed in a proper manner. In addition, this document outlines procedures for the identification, removal, storage, and final disposal of all unauthorized waste that may be encountered during the Facility's operations. These procedures include the development of:

1. Educational materials that outline acceptable and non-acceptable materials for the Facility, as well as general protocol, procedures for receipt of materials at the Facility, and instructions for haulers arriving and departing the Facility (*see SOP-21-006 Feedstock Acceptance Guidelines*).

2. Training programs for the identification of authorized and unauthorized solid waste by employees.

3. Procedures for the removal and segregation of unauthorized solid waste from the waste stream that is to be processed by the Facility.

4. Procedures for the final disposal of the unauthorized solid waste at a disposal Facility permitted to handle the unauthorized solid waste in question.

5. Reporting procedures to document the receipt of unauthorized waste by the Facility.

6. A Facility access control plan.

1.3 Definitions

1. *Anaerobic Digestion* is a biological waste treatment process where organic materials such as food waste are stabilized in the absence of oxygen, reducing volatile solids, vector attraction, and pathogens.

2. *Authorized waste* means any solid or liquid waste that the Facility is authorized to receive for processing, transfer, or disposal under the conditions of its permits. These permits include:
   a. A Solid Waste Management Facility Permit to Operate issued by the IEPA,
   b. A City of Chicago Department of Public Health permit to operate a Class III recycling facility that accepts and processes Type B recyclables via anaerobic digestion (which is permitted as an in-vessel compost facility per City of Chicago code and IEPA regulations), and,
   c. A City of Chicago Department of Public Health permit to operate a Liquid Waste Handling Facility.

3. *Asbestos waste* means a friable solid waste that contains more than one percent asbestos by weight and can be crumbled, pulverized or reduced to powder, when dry, by hand pressure. Asbestos waste also includes any asbestos-containing solid waste that is collected in a pollution control device designed to remove asbestos.

4. *Ash* means and includes cinders, fly ash or any other solid material resulting from combustion, and may include unburned combustibles.

5. *Biosolids* means a product of the biological wastewater treatment process. During biological wastewater treatment, the liquids are separated from the solids. Those solids, which are primarily composed of dead bacterial

mass, are then treated physically and chemically to produce a semisolid, nutrient-rich product known as biosolids. The terms 'biosolids' and 'sewage sludge' are often used interchangeably.

6. *Cake* means a semi-solid mass of suspected solids ranging from 18 to 30% dry matter that are separated from liquid whole digestate during the digestate dewatering process.

7. *Class I recycling facilities* are recycling facilities which contain receptacles for the collection of Type A and Type B recyclable materials only. Manual separation only of Type A and Type B recyclable materials shall be permitted at a Class I facility.

8. *Class II recycling facilities* are recycling facilities for the collection of Type A and Type B recyclable materials only. Class II facilities may perform any activity permitted in a Class I facility and may also perform processing.

9. *Class III facilities* are recycling facilities for the collection of Type A and Type B recyclable materials only. Class III facilities may perform any activity permitted in a Class II facility and may also engage in composting.

10. *Coconut Coir* means the natural fibrous material extracted from the outer husk of coconut.

11. *Commercial/Retail Waste* includes materials discarded by stores, offices, office buildings, restaurants, warehouses, wholesale establishments, non-manufacturing activities and other similar establishments or facilities.

12. *Composting* means the biological treatment process by which microorganisms decompose the organic fraction of the waste, producing compost.

13. *Construction and demolition (C&D) debris* means City of Chicago… "Construction and demolition debris" means materials resulting from the construction, remodeling, repair and demolition of utilities, structures, buildings, and roads, including but not limited to the following: bricks, concrete, and other masonry materials; soil; rock; wood, including painted, treated, and coated wood and wood products; wall coverings; plaster; drywall; plumbing fixtures; non-asbestos insulation; roofing shingles and other roof coverings; reclaimed asphalt

pavement; glass; plastics; electrical wiring; and piping or metals incidental to any of those materials.

14. *Digestate* means the material remaining after the anaerobic digestion of biodegradable feedstock.

15. *Disposal facility* means a facility where occurs the discharge, deposit, injection, dumping, spilling, leaking or placing of any waste into or on any land or water or into any well so that such waste or any constituent thereof may enter the environment or be emitted into the air or discharged into any waters, including groundwater. As used in this definition, "disposal" includes methods of storage or treatment in which there is no certain plan to remove wastes or waste residues from the storage or treatment unit to another unit for ultimate disposal.

16. *End-Product compost* means organic material that has been processed to maturity and classified as general use compost or designated use compost in accordance with 35 IAC Part 830.

17. *Finished Product* means the dewatered digestate cake ranging from 18 to 30% dry matter that is separated from liquid whole digestate during the digestate dewatering process.

18. *Food processing waste* means waste resulting solely from the processing of fruits, vegetables, grains, dairy products, meats, and related food products. *Food processing waste* may include solids and sludges generated from food processing wastewater (i.e. spent grains, fats/greases, and Dissolved Air Flotation sludges).

19. *Food scrap* means garbage that is (i) capable of being composted, (ii) separated by the generator from other waste, including non-compostable garbage; and (iii) managed separately from other waste, including non-compostable garbage. *Food scrap* includes packaging, utensils, and food containers composed of readily biodegradable material in accordance with the ASTM D6400 standard required for use under Section 3.197 of the Illinois Environmental Protection Act, as amended.

20. *Food waste* is defined as Food Scrap and/or Food processing waste.

21. *Garbage* is waste resulting from the handling, processing, preparation, cooking, and consumption of food, and wastes from the handling, processing, storage, and sale of produce.

22. *General Use Compost* means End-Product compost which meets the standards set forth in 35 IAC Section 830.503.

23. *Hazardous waste* means a hazardous waste as defined in 415 ILCS 5/3.220.

24. *Household medical waste* means household solid waste which, but for its point of generation, would be a regulated medical waste.

25. *Household hazardous waste* means household waste which but for its point of generation, would be a hazardous waste.

26. *Household waste* means any solid waste (including garbage, trash and sanitary waste in septic tanks) derived from households (including single and multiple residences, apartment buildings and complexes, hotels, motels, and other similar permanent or temporary housing, picnic grounds, campgrounds and day-use recreation areas).

27. *Industrial process waste* means any liquid, solid, semi-solid, or gaseous waste generated as a direct or indirect result of the manufacture of a product or the performance of a service. Any such waste which would pose a present or potential threat to human health or to the environment or with inherent properties which make the disposal of such waste in a landfill difficult to manage by normal means is an industrial process waste. "Industrial Process Waste" includes but is not limited to spent pickling liquors, cutting oils, chemical catalysts, distillation bottoms, etching acids, equipment cleanings, paint sludges, incinerator ashes (including but not limited to ash resulting from the incineration of potentially infectious medical waste), core sands, metallic dust sweepings, asbestos dust, and off-specification, contaminated or recalled wholesale or retail products. Specifically excluded are uncontaminated packaging materials, uncontaminated machinery components, general household waste, landscape waste and construction or demolition debris. Also specifically excluded from this definition of *Industrial Process Wastes* are food wastes and food processing wastes such as wash/rinse waters from cleaning food storage and transportation tanks and trailers, and other wastes described in Section 2.1 of this *Plan*, which are process wastes that the Facility may accept and process.

28. *In-vessel composting* is composting which is conducted entirely within a fully enclosed container, with no opening having a dimension greater than 1/4 inch in any direction. Composting (in contrast) is an aerobic biological process used to stabilize organic wastes.

29. *Landscape waste* means grass or shrubbery cuttings, leaves, tree limbs and other materials accumulated as a result of the care of lawns, shrubbery, vines and trees, and includes any discarded fruits, vegetables and other vegetative material or crop residue generated in the care of a garden. The term "landscape waste" does not include soil other than incidental soil

(e.g., soil attached to sod or attached to other materials accumulated as a result of the care of lawns, shrubbery, vines, trees or a garden).

30. *Liquid waste* means refuse which maintains the physical state of continuous volume relatively independent of pressure and which takes the shape of its container at ambient temperature.

31. *Liquid waste handling facility* means a facility or part of a facility which receives, treats, disposes of, or otherwise manages liquid waste, liquid special waste, or liquid hazardous waste. These activities include acceptance of materials for treatment, blending and/or consolidation, or for further transfer to a waste disposal, treatment or handling facility.

32. *Municipal waste* means garbage, household waste, commercial/retail waste, institutional waste, industrial lunchroom and office waste, landscape waste, and construction or demolition debris.

33. *Non-digestible material* means the portion of a food waste that is not amenable to anaerobic digestion.

34. *Organic waste* means food scrap, landscape waste, uncontaminated wood waste or other non-hazardous carbonaceous waste, such as paper, corrugated paper or cardboard, that is collected and processed separately from the rest of the municipal waste stream.

35. *Radioactive regulated waste* means any radioactive wastes that are required to be transported and disposed of at regulated facilities as set forth by 45 ILCS 141.

36. *Recyclable* means a Recyclable material defined as follows: Recyclable material shall be categorized as Type A, Type B, Type C or Type D recyclable material and shall have the meaning ascribed to each such type, as follows:

    a. "Type A recyclable material(s)" means any aluminum or ferrous or non-ferrous scrap metal; bi-metal or tin cans; glass products; paper products; rubber; textiles; plastic products, such as polyethylene terephthalate, high density polyethylene, low density polyethylene, polystyrene or polypropylene; and any other material designated as Type A recyclable material by the commissioner in duly promulgated rules and regulations.
    b. "Type B recyclable material(s)" means organic waste, and any other material designated as Type B recyclable material by the commissioner in duly promulgated rules and regulations.
    c. "Type C recyclable material(s)" means used motor vehicles or motor vehicle parts, and any other material designated as Type C recyclable material by the commissioner in duly promulgated rules and regulations.

d. "Type D recyclable material(s)" means construction and demolition debris that does not contain lead, asbestos or any other hazardous material in such a way as to render recycling of such material illegal or impossible and that has been rendered reusable and is reused, or that would otherwise be disposed of or discarded but is collected or separated and returned to the economic mainstream in the form of raw materials or product, and any other material designated as Type D recyclable material by the commissioner in duly promulgated rules and regulations.

37. *Recycle* or *Recycling* means any process by which materials that would otherwise become municipal waste are collected, separated or processed and returned to the economic mainstream in the form of raw materials for new, reused or reconstituted products, but does not include the recovery of materials for fuel in combustion or energy production processes. This definition shall not prohibit any recycling facility from recovering and using biogas or other fuel generated as a byproduct of a recycling activity, as approved by the commissioner, while the facility is otherwise primarily engaged in recycling.

38. *Recycling facility* means any building, portion of a building or area in which Type A, Type B, Type C or Type D recyclable material is collected, stored, or processed for the purpose of marketing the material for use as a product or as raw material in the manufacturing process of new, reused or reconstituted products.

39. *Refuse* means garbage and rubbish.

40. *Regulated Medical Waste* means a medical waste as defined in 415 ILCS 5/Tit. XV (i.e., as Potentially Infectious Medical Waste).

41. *Septage* means liquid or solid material removed from a septic tank, cesspool, portable toilet, or similar system.

42. *Site* means any location, place, tract of land, and facilities, including but not limited to buildings, and improvements used for purposes subject to regulation or control by the Illinois Environmental Protection Act or regulations thereunder.

43. *Solid waste* means any type of product managed as a waste.

44. *Source-separated food waste* means any food waste that has been pre-sorted from other waste by the customer or waste generator.

45. *Source-separated organic waste (SSOW)* means readily degradable organic material that has been separated from non-compostable material at the point of generation including, but not limited to, food waste. It does not

include yard waste, landscape waste, soiled or unrecyclable paper, or biosolids.

46. *Special waste* means any industrial process waste, pollution control waste or hazardous waste, as defined in regulations issued by the Illinois Pollution Control Board.

47. *Storage* means the containment of waste, either on a temporary basis or for a period of years, in such a manner as not to constitute disposal.

48. *Transporter* means a person engaged in the off-site transportation of solid waste by air, rail, highway or water.

49. *Treatment* means any method, technique, or process including neutralization, designed to change the physical, chemical, or biological character or composition of any waste so as to neutralize it or render it nonhazardous, safer for transport, amenable for recovery, amenable for storage, or reduced in volume. Such term includes any activity or processing designed to change the physical form or chemical composition of hazardous waste so as to render it nonhazardous.

50. *Unacceptable waste (see Unauthorized Waste)*

51. *Unauthorized waste* means any waste that is not included as an authorized waste to be processed at the Facility under its permits.

52. *Waste* means any discarded or abandoned material in solid, semisolid, liquid or contained gaseous form, including, but not limited to, industrial process waste, hazardous waste, municipal waste, special waste, garbage, sludge from a waste treatment plant, water supply treatment plant or air pollution control facility, but excludes:

    a. Sewage collected and treated in a municipal or regional sewage system; or
    b. Recyclable materials managed in compliance with the provisions of Chapter 11-4 of the Chicago Municipal Code and regulations of the City of Chicago.

53. *Waste tire* means any solid waste which consists of whole tires or portions of tires.

54. *Yard Waste* means leaves, grass clippings, garden debris, tree branches, tree limbs and other similar woody materials.

1.4 Facility Operations

This site will be authorized to receive source-separated organic waste (SSOW), which as-received will contain between 5% and 10% non-digestible materials by weight. The source-separated organics may be collected from supermarkets, bakeries, restaurants, commercial food processers/manufacturers, cafeterias, schools, colleges, nursing homes, hospitals, correctional facilities, catering halls and hotels/resorts. SSOW may also be accepted from residential curbside organics collection programs that meet the separation requirements for this Facility. The non-digestible fraction will consist of old corrugated cardboard, metals, glass, rigid plastics, plastic films as well as bones and shells. A portion of the non-digestible fraction will be recyclable. The recyclable fraction may be separated for further processing. The balance of the waste that has no recyclable value or is not digestible will be compacted for landfill disposal. The digestible fraction will be separated on-site and be used as feedstock for the anaerobic digester. Plant employees will be trained in the identification and safe and proper handling of authorized and unauthorized solid waste. Full definitions of the types of waste, authorized and unauthorized, may be found in Section 1.3, above.

The Facility will also accept pumpable liquid feedstocks such as fats, oils, and greases (FOG) as collected from restaurant grease traps and commercial food processors, and food related rinse waters. Commercial food processors such as meat processors and snack food plants will separate oils and grease from wash water by means of dissolved air-flotation (DAF) which aids in the separation of the oils from the water. The skimmed greasy water from this process is typically called DAF sludge and can be processed by anaerobic digestion. Large brewers also separate solids from their wastewater prior to discharging to a wastewater plant and produce organic sludges primarily containing distiller grains that is suitable for digestion.

Many food products are also transported by rail or road in tanks. The tanks need to be washed between loads. The rinse water can be high in sugars and fats and is amenable to processing by anaerobic digestion. A comparable facility in Columbus, Ohio regularly receives water from rinsing out corn syrup rail tank cars and water with dissolved wheat flour from rinsing dry bulk trailers.

The Facility will receive 5 to 8 trucks per day delivering pumpable food wastes in tankers (averaging 13 tons per truck) and 8 to 16 loads per day of source separated food waste in compactors, roll-off containers, or 40 foot long dump trailers (averaging 12 tons per load). The Facility will remove 1 to 2 compactors a day of food waste packaging and grit to the landfill. Additionally, 2 semi-loads per day of soil amendment (a "cake" that is typically 20 to 25% total solids and is considered finished product) will be utilized on-site by the *Urban Growers Collective (UGC)* or transported to other off-site regional composters or users.

All feedstock receiving, material processing, including truck unloading/loading will be conducted in the enclosed Operations Building. The building will be maintained

at a slight negative air pressure and ventilation air will be treated through a dual-stage process consisting first of an ionization reactor followed by an activated carbon adsorption system ("guard bed"). The activated carbon adsorber will be designed to remove odors even in the absence of the ionization reactor. Fully treated exhaust air will be discharged to a stack. Air ionizer units within the building will provide in-situ treatment of the odor causing compounds. The Facility will maintain an *Odor Control Plan* that identifies potential odor sources, mitigation measures, control points, as well as an employee awareness and training program. This *Plan* also includes methodology to monitor and maintain the activated carbon guard bed.

All trucks will enter the Facility from South Wallace Street through a gated entrance. The gate will be open during daytime hours. No trucks will be allowed to queue on South Wallace Street or W. 83rd Street.

Trucks delivering non-pumpable waste in a dump trailer or roll-off container must be covered and will back through one of the solids receiving bay doors to a curbed stop at the tipping wall. The concrete floor will be striped with yellow lane markings to assist drivers with alignment. If the solids bay is occupied, additional trucks will need to park outside of the building in the designated area.

Trucks delivering pumpable food waste or F.O.G. can pull into the building through the north overhead door, closest to the digester tank. The waste materials within these trucks are enclosed within the tanker trucks, and therefore, such trucks are not potential sources of odors even if temporarily staged outside the building.

Vans delivering palletized products will back to the loading dock at the north end of the building.

After tipping, trucks that delivered non-pumpable waste will exit the bay doors and turn left to weigh across the scale and will exit at Wallace.

Liquid tankers will pull through the building and turn to the right and proceed to the scale

Trucks delivering to the Facility will have a manifest (*FORM-21-001*) with verifiable load weights or volumes with the generator(s) listed and the collection date. Every load will be accompanied by the form to meet recordkeeping requirements associated with tracking of incoming waste. All waste haulers and generators will be pre-approved by Green Era and a list of current and past customers will be maintained by the Facility and will be available for inspection by any permitting authority, (*LIST-21-001, Approved Customer List*). A list of approved feedstocks (LIST-21-002) that is cross-referenced to the generator or hauler will also be maintained by the Facility. Records of incoming waste, approved customers, and approved feedstocks will be maintained for a minimum of 3 years.

All trucks will exit the Facility at South Wallace Street.

The separated non-digestible fraction will be conveyed to stationary waste compactors that sit inside the building in the northwest corner of the building of the building.

No waste materials or feedstock will be staged, stored, or handled outside the building.

The Facility will produce a finished product (the cake created by dewatering of the digestate), which will be utilized on-site by the Urban Growers Collective or transported off-site to other end-users. At times, the dewatered digestate cake (the finished product) may be mixed with wood chips or coconut coir on site within the pole barn prior to use on-site or off-site.. The finished product cake will consist of dead anaerobic bacterial mass and plant cellulose that is not able to be decomposed further by anaerobic digestion. The odor characteristics of this material are the same or similar as anaerobically digested and dewatered municipal wastewater plant sludge cake. These solids will be separated (within the Operations Building) from the treated liquid digestate through a conventional dewatering process (belt filter press). The finished product cake will be directly loaded into semi-dump trailers or roll-off boxes inside the building

Wastewater separated from the digestate in the dewatering process will be collected in filtrate tanks. The filtrate will be pumped to the sewer through a metered force main. The wastewater discharge will be permitted through a Discharge Authorization issued by the Metropolitan Water Reclamation District of Greater Chicago.

Biogas produced by the anaerobic digestion process will be captured and refined (i.e., processed) prior to injection into the natural gas pipeline.

1.5 Facility Access and Site Security

The Facility is fully fenced and will have two vehicular access gates. The fences will be screened. The access gate from West 83rd will be used by employees and visitors. The access gate on Wallace will be used for the entrance and exit for feedstock deliveries and other heavy truck traffic. The gates will be closed off-hours, but may be accessed by calling the Plant Operator or with an access keycode.

The site will be lit at night by outdoor pole lighting and downlighting along the building perimeter.

Closed-circuit cameras will be positioned outside and inside the Facility to monitor operations on the site from a control room or remotely if needed. The camera feeds will be recorded and stored for up to 1-week on a digital recording appliance.

The Facility will be fully staffed during waste receiving hours.

All waste tipping and receiving will occur inside the Operations Building. Exterior building doors will remain locked outside of normal receiving hours. Overhead doors will only be opened when trucks are entering or exiting the Facility to mitigate fugitive odors.

2.0

Waste Characterization

2.1 Authorized Solid Waste

Source-separated food waste will be accepted by the Facility, and is any food waste that has been pre-sorted from other waste by the customer or waste generator. Usually, this term specifically refers to curbside collected household kitchen waste, restaurant waste, and grocery store waste, where a person physically handled the material and consciously separated the organics from other waste. The volume of non-digestible materials contained in the waste, such as plastic bags and food packaging, can vary widely depending on the collection methods and generator. Haulers will generally provide dedicated totes, dumpsters, or compactors for food waste collected from homes or businesses. Source-separated organic waste (SSOW) will also be accepted by the Facility and is defined as readily degradable organic material that has been separated from non-compostable material at the point of generation including, but not limited to, food waste.

Example SSOW collection tote at a farmers market (Total Organics St Louis)

Food processing waste will be accepted by the Facility. Food processing waste generated by commercial food processors is also a type of source separated waste, since it is also kept separate from other types of waste. Commercial food processors often have multiple discrete sources of bulk waste organics that cannot be sold (e.g., out of specification food products).. Types of businesses in this category include commercial bakeries, canners, brewers, snack food fryers, pasta companies, dairies, and meat packers. Pet food manufacturers also produce waste that would be suitable for anaerobic digestion. Prior to accepting bulk waste from any commercial food processors, Green Era will complete a *Waste Generator Survey* (*FORM-21-007*) with the generator that includes a description of the process that generates the waste, the typical quantity, handling characteristics, odor profile, transportation options, and characteristic energy and nutrient values based on laboratory analysis. A large fraction of available commercial food waste is pumpable and will be hauled in closed tankers. Examples of pumpable commercial food waste include wash/rinse water from cleaning food storage tanks and trailers, whey, liquid ice cream mix, end of batch soups, sauces and syrups, and separated and thickened scum and solids from plant wash water. Other non-pumpable food waste may be transported in compactors or tarped dump trailers.

Packaged food waste may also be processed by this Facility. Packaged food waste are any foods contained within consumer packaging. Examples of packaged food waste include beverages or soup in cans, milk or juices in plastic jugs, bottles or cartons, and single serving condiment packs. This type of food waste is usually generated because of product changeover on a packaging line, mislabeling, underfills/overfills, failed quality checks, past sell-by date product, damaged containers, and recalled product. At the Facility, the packaging will automatically be separated from the organic product by a separation mill, which is a specialized type of hammermill built for this application.

Fats, oils, and grease (FOG) are other food wastes that will also be accepted. This type of pumpable food waste is collected from grease traps at restaurants and food processors. FOG waste is currently accepted by some municipal wastewater treatment facilities. Green Era will provide haulers with education materials on the collection of FOG for this Facility. They will be prohibited from collecting and mixing grease trap waste from car washes, car garages, industrial customers, or from other non-food processing establishments.

	TS (%)	VS (%)	COD (mg/l)	pH	TKN (mg/L)
Source Separated Organics	20 - 30	85 - 94	200,000 - 300,000	4 - 7	4000 - 9000
FOG (grease trap, not dewatered)	2 - 5	88 - 92	20,000 - 70,000	4 - 5	500 - 1000
Pumpable Food waste	3 - 8	85 - 90	60,000 - 200,000	3 - 8	1500 - 2000
Mixture	12 - 14	88 - 90	125,000 - 200,000	3 - 5	2000 - 3000

Typical Feedstock Parameter Ranges

Source-separated food waste will contain non-digestible material such as plastic bags, food containers, and packaging products. Typical components of this non-digestible material include steel and aluminum cans, PET bottles, corrugated cardboard, plastic and stainless cutlery, disposable plates and trays, and all types of plastic containers. Food waste can also contain bones and shells, fruit pits/seeds/hulls, sand, and grit that will not be decomposed by the digester. The feedstock as received is expected to contain up to 12% non-digestible material by weight, and average 6% non-digestible material across all waste streams. The processing system is designed to remove non-digestible material, typically food packaging and collection bags, from the received feedstocks prior to digestion. No unseparated municipal solid waste or unseparated household waste will be accepted by this facility. The food waste will invariably contain some atypical non-digestible material that has been improperly disposed of by the generator. The Facility will implement operating procedures for identifying, handling, and segregating unexpected items in a manner that will not damage equipment and lead to unplanned downtime. Much of this type of non-digestible material can be limited by regularly educating the haulers and the generators on the acceptable types of waste and how the waste will be processed. Container labeling and controlling access to the waste dumpsters will also mitigate the level of unauthorized disposal of non-digestible materials. Large bulky items can be identified by visual inspection and removed prior to processing, such as wooden pallets, old tires, or C&D debris. Waste loads that appear to have a large amount of undesired material may be rejected by the Facility and sent to the landfill or alternatively dumped into a segregation area and manually sorted before loading into the waste receiving hoppers with a wheel loader. Waste can be tipped on the receiving floor in front of the tipping wall to the east of the receiving bin. Free liquids will be collected in the trench drain and will be pumped from the lower-level sump to the liquid receiving tanks. Any waste tipped on the floor will be sorted and loaded into the live bottom hopper for processing the same day. No uncontained bulk organic waste will be stored on the tipping floor. Non-hazardous separated bulk materials can be loaded into the trash compactors or kept separate for recycling.

2.2 Unauthorized Waste

The following unauthorized waste is not accepted for processing at the Green Era Facility: Hazardous waste, Special waste, biosolids, septage, landscape waste, yard waste, land clearing debris, asbestos waste, ash, construction and demolition debris, unseparated municipal solid waste, unseparated household waste, industrial process waste, regulated medical waste, radioactive waste, and waste tires.

3.0

Waste Storage

All unprocessed waste will be stored within the Operations Building either in the liquid feedstock receiving tanks, the solids receiving hopper, or as packaged and palletized product. The solids receiving hopper will normally be fully emptied each day. No waste will be stored or processed outdoors. Separated non-digestible materials and grit will be loaded into two 40 CY enclosed compactors that will be located and operated inside the building. Compactor boxes will be exchanged when full and taken directly to the landfill for disposal after loading onto the truck.

Tanker trucks bringing FOG or other pumpable liquid feedstock can discharge directly to 60,000 gallons of combined liquid underground storage (T-050A, T-050B) or FOG may be pumped directly to the biomass tank (T-100). The trucks will be unloaded within the Operations Building. The biomass tank (T-100) has a working volume of 320,000 gallons. At an average of 50,000 gallons per day of pulped and blended feedstock, the biomass tanks have over 6 days of total hydraulic storage capacity. But it should be noted that the Facility always has the option to not accept material brought to the Facility, and therefore, there is no feasible occurrence where the rate at which the Facility receives material exceeds the storage capacity or the processing capacity. The head space of the below slab tanks in the building are connected to the ventilation fan header. The header will operate at a slight vacuum. Odorous air and vapors displaced during tank filling will be treated in the ionization reactor within the building and then further treated by the activated carbon "guard bed" prior to discharge from the building. An Odor Control Plan that includes a monitoring and maintenance plan for the odor control equipment has been developed and is a companion document to this Waste Control Plan.

The digester will be operated at 1.5 million gallons, which represents a hydraulic retention time of 30 days at 50,000 gallons per day. The full volumetric capacity of the digester tank is 1.68-million gallons.

The digested sludge will be dewatered inside the building on a belt press and the finished product cake will be directly loaded onto a semi dump trailer during dewatering operations inside the Operations Building. For reference, the dewatered digestate (finished product cake) have the characteristics of dewatered biosolids

generated by anaerobic digestion of municipal wastewater sludges, and will meet the requirements for General Use compost.

The trailer will remain parked in the building until it can be transported off-site or to the on-site pole barn for temporary staging and possibly mixing (in the pole barn) with wood chips or coconut coir, and then subsequently used at a UGC farm or other end-user as a soil amendment for growing vegetables and fruits. Full trailers may also be held in the building for up to one-day in the adjacent truck bay until it can be taken to a farm. Full trailers held in the building will be fully tarped. Up to 50 CY of cake solids may be held in the building for up to 24-hours.

4.0
Quality Control

4.1 Introduction

Haulers and generators will be pre-approved by Green Era for waste acceptance. For all loads, manifest paperwork (*FORM-21-001*) attesting to the generator, waste origin, and composition must be presented to the attendant on the tipping floor before being permitted to dump. Source-separated food waste loads will first be visually inspected by the attendant prior to tipping. If any unauthorized waste is spotted the entire load will be reject prior to tipping. After given the authorization to tip, the attendant will look for any gross signs of unauthorized waste in the live bottom receiving hopper. If unauthorized waste is found in the load, the waste will be removed and segregated prior to processing. Lock-out tag-out procedures and other safety measures will be observed during separation of waste that has already been tipped. Bulk unauthorized waste may need to be mechanically removed with an excavator. The hauler and generator will be informed of the unauthorized waste and the event recorded.

Liquid wastes could also contain unauthorized materials that may not be apparent from visual inspection. Anaerobic digestion, like other biological processes, can be affected by concentrations of metal salts and chemicals that are toxic to the bacteria. The Oxidation Reduction Potential (ORP) can be quickly measured to determine if the liquid waste contains concentrations of an oxidizing liquid, such as bleach, that would be harmful to the bacteria. The ORP of incoming FOG loads will be spot checked for high ORP values, greater than 150 mV. The ORP measurement will not guarantee that the load is safe. Additionally, pH and temperature may also be measured and recorded. Color and odor can be used to disqualify a load. The presence of solvents or petroleum distillates should be observable from the odor. Off colors from unknown origins may also be reason to reject loads. New single source liquid food waste will be checked and pre-approved based on laboratory testing for chemical oxygen demand (COD), waste composition description, and nutrient analysis. Biogas methane potential laboratory testing may also be conducted to further determine the waste's suitability for digestion. Loads may be spot checked throughout the year to test for deviation from the norm. The COD of combined and

blended feedstock will be checked bi-weekly to determine the caloric value of the feedstock to prevent "overfeeding" the digester. Process monitoring and testing is further described in the Engineering Report (MP-02).

During the plant commissioning period and when receiving new types of feedstocks work instructions will be developed for the Facility that describe the procedure for handling specific types of waste and testing protocols. The work instructions will be maintained and updated by the Plant Manager and Plant Engineer.

Work instructions will be controlled documents with revision level tracking and ownership information. Current work instructions will always be accessible to employees through electronic viewers/devices. Work instructions will be reviewed during employee training.

4.2 Control of Unauthorized Waste

This section defines the procedures that the Facility will employ to ensure that unauthorized waste will be detected and segregated from the authorized waste stream to preclude its processing by the anaerobic digester.

4.2.1 Identification and Separation

All incoming loads will first be visually inspected upon arrival. The tipping floor attendant will look for any gross signs of unauthorized waste. If unauthorized waste is found in the load, the Plant Manager will be notified. If the unauthorized waste is non-classified waste or contains large quantities of non-digestible material, the waste will be placed into a bin for subsequent handling, either combined with the other waste to be shipped off-site for landfill disposal or specifically handled in compliance with applicable State and Federal regulations. If the waste type is unknown or determined to be classified as hazardous, the waste will be removed and segregated and placed in a designated potentially hazardous waste storage area for subsequent characterization. The hauler will be informed of all types of unauthorized waste. Both the hauler and generator will be contacted to ensure that their employees fully understand the Facility's waste disposal requirement and the event will be logged (see below).

4.2.2 Disposal

Green Era will engage, or if required, enter into a contractual arrangement with, a hazardous material waste management company to collect from the Facility any unauthorized Special or Hazardous waste that is received by the Facility. All other

unauthorized waste (e.g., commercial waste, plastics, waste tires) received at the Facility will be transported to the appropriate permitted waste disposal facility for final disposal by a licensed (as applicable) hauler. Should Green Era encounter an unauthorized waste that it or it's contracted hazardous material hauler cannot transport to its final disposal facility, Green Era will immediately notify the Chicago Department of Public Health to identity a transporter who is permitted to dispose of the waste in question. Upon the identification of the appropriate transporter, Green Era will immediately contact the transporter and make the necessary arrangement to have the waste removed from the Facility. At no time will unauthorized waste remain at the Facility longer than 90 days.

4.2.3 Recordkeeping

All incidents involving the discovery of unauthorized waste will be immediately entered into the Unauthorized Waste Log (*LOG-21-006*). The entry will include the type of unauthorized waste, its source, quantity, and disposition. On disposal of the unauthorized waste, a notation will be made in the Facility log indicating that the waste was disposed. This notation will include the manifest or weight ticket number so that the disposal documentation can be easily recovered from the files. A copy of the manifest or weight tickets indicating that the unauthorized waste was properly disposal of will be submitted as an Attachment to the Facility's Quarterly Report with Chicago Department of Public Health. All documentation will be maintained for a minimum of 3 years.

4.2.4 Prevention

To prevent the disposal of unauthorized waste at the Facility, Green Era has developed the following procedures.

Green Era has prepared a letter/flyer to be provided to all contractors that enter into a contract with Green Era for disposal at the Facility (see *SOP-21-006*, *Feedstock Acceptance Guideline*s). The document outlines all of the materials that are authorized to be received by the Facility under its Permits. It also indicates those materials that are not authorized to be received.

4.3 Control of Hazardous Waste

This section defines the procedures that the Facility will employ to ensure that hazardous or any other unauthorized wastes will be detected and segregated from acceptable waste stream to preclude its disposal at the Facility.

4.3.1 Identification and Separation

All incoming SSO loads will first be visually inspected at the tipping wall within the Operations Building after dumping by the floor attendant for any gross signs of hazardous waste. If hazardous waste is found in the load, the Plant Manager will be notified and the waste will be removed and segregated into a separate hazardous waste storage area. The hauler will be informed of the hazardous waste, the contractor will be contacted to ensure that such contractor fully understands the Facility's waste disposal requirement, and the event will be recorded (see below).

The Plant Manager will then notify the Chicago Department of Public Health. By email to EnvWastePermits@cityofchicago.org (as required by the CDPH Permit).

See the diagrams below for the process regarding the identification and segregation of hazardous materials, as well as notification procedures.

Figure 1- Hazardous Waste Disposal Process

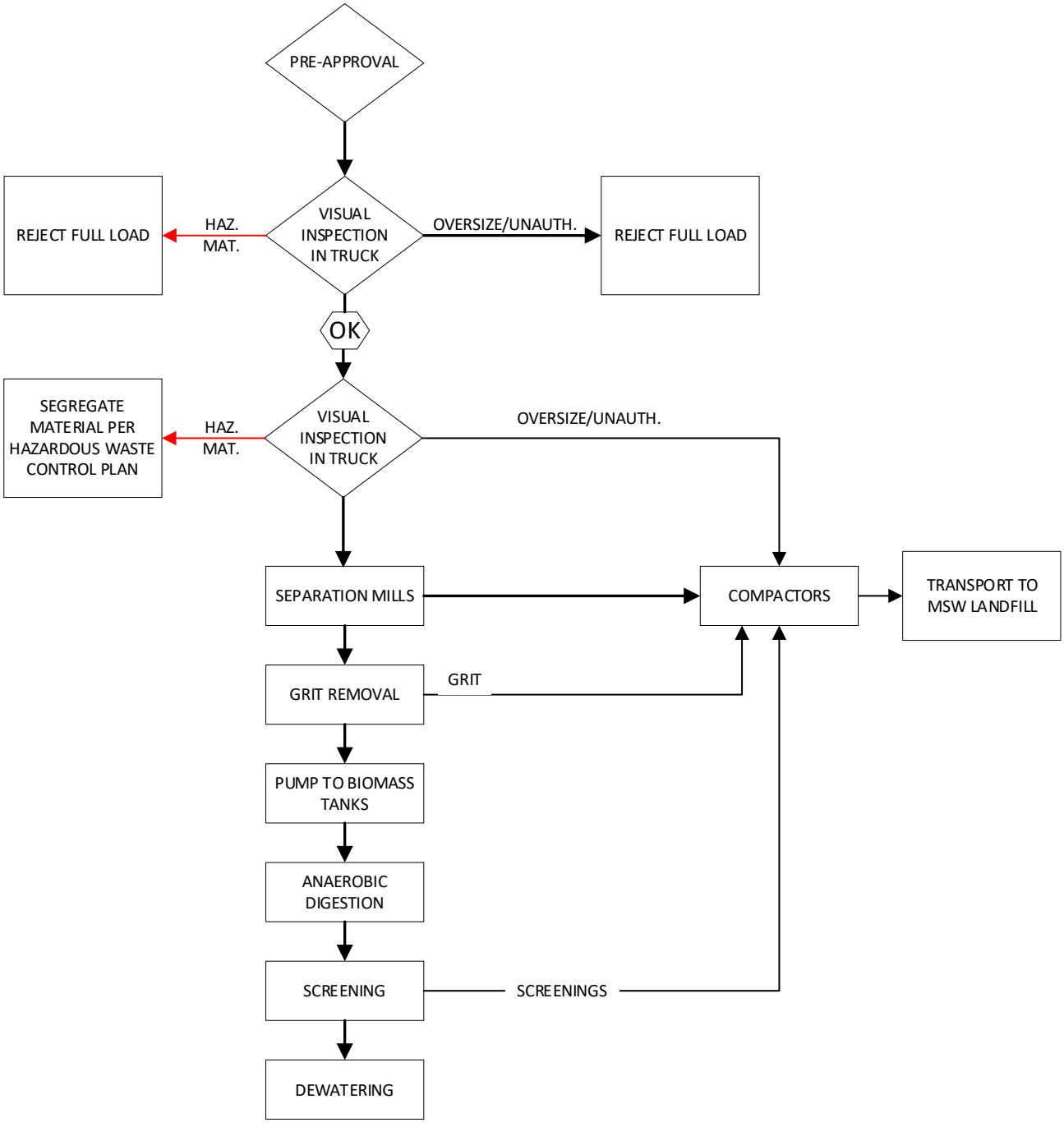

Figure 2 – Hazardous Waste Notification Process

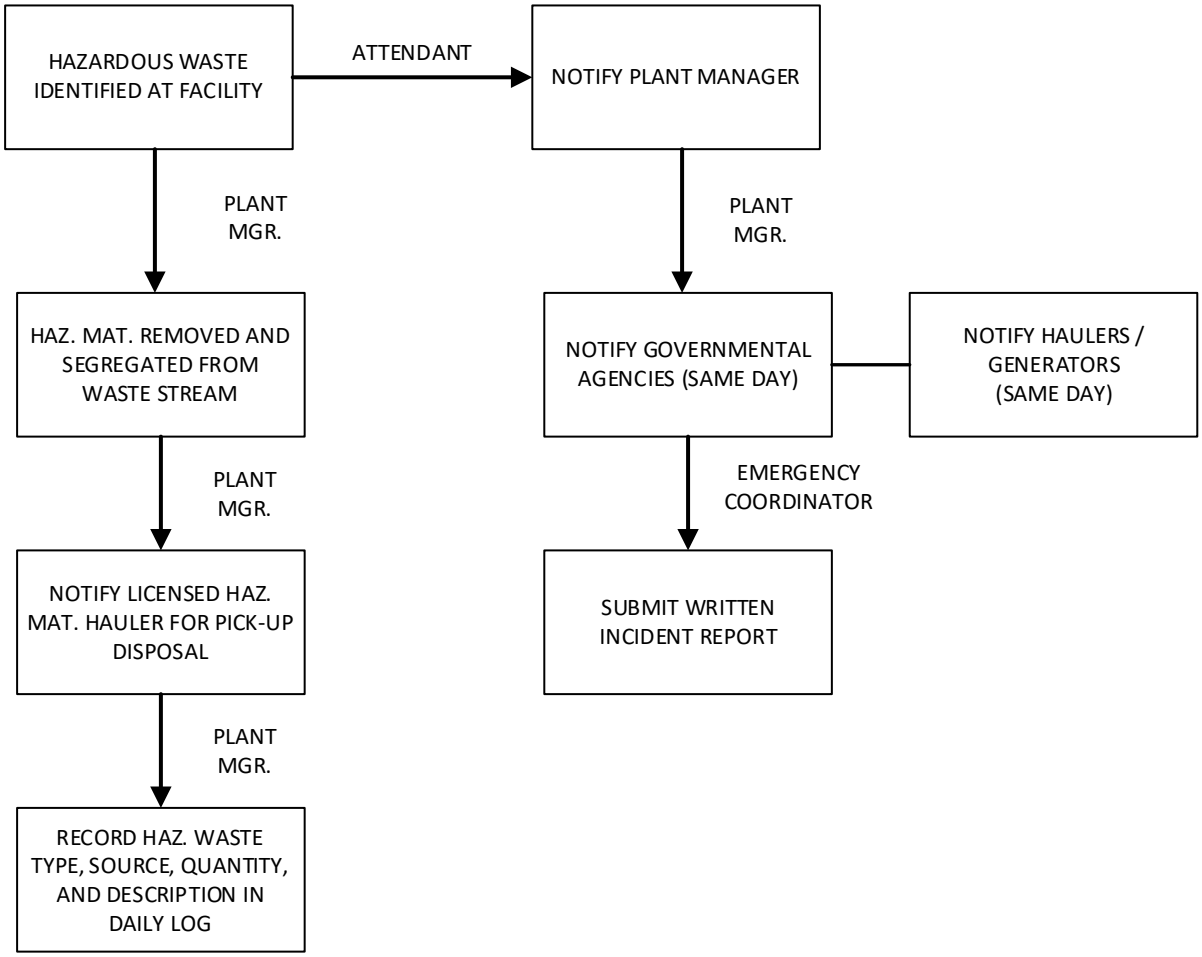

4.3.2 Disposal

Green Era will engage, or if required, enter into a contractual arrangement with, a hazardous material waste management company to collect from the Facility any unauthorized Hazardous waste that is received by the Facility. At no time will unauthorized waste remain at the Facility longer than 90 days. Hazardous waste will be segregated from both authorized and unauthorized waste in a separate area located near the screening press. If Green Era encounters a hazardous waste that the hazardous material waste management company engaged by Green Era cannot transport to its final disposal facility, Green Era will immediately notify the Chicago Department of Public Health to identify a transporter who is permitted to dispose of the waste in question. Upon the identification of the appropriate transporter, Green Era will immediately contact the transporter and make the necessary arrangements

to have the waste removed from the Facility. At no time will hazardous waste remain at the Facility longer than 90 days.

4.3.3 Recordkeeping

All incidents involving the detection of hazardous waste will be immediately entered into the Facility's Unauthorized Waste Log (LOG-21-006). The entry will include the type of hazardous waste, its source, quantity, and disposition. Upon disposal of the hazardous waste, a notation will be made in the log indicating that the waste was disposed. This notation will include the manifest number so that the disposal documentation can be easily retrieved from the files. A copy of the manifest indicating that the hazardous waste was properly disposal of will be submitted as an attachment to the Facility's Quarterly and Annual Reports. All documentation will be maintained for a minimum of 3 years.

4.3.4 Prevention

To prevent the disposal of hazardous waste at the Facility, Green Era has developed the following controls.

Green Era has prepared a letter/flyer to be provided to all contractors that enter into a contract with Green Era for processing at the Facility (see SOP-21-006, Feedstock Acceptance Guidelines). The document outlines all of the materials that are authorized to be received by the Facility under its Chicago Recycling Permit, Chicago Liquid Waste Handling Facility Permit and IEPA Solid Waste Facility Permit. It also indicates those materials that are not authorized to be received.
.

4.3.5 Employee Training

All personnel involved in waste handling will be trained in identifying hazardous wastes in accordance with ILAC Title 35 Part 721, *Identification and Listing of Hazardous Wastes*. This Part includes the definitions of what constitutes hazardous materials and waste and the criteria for identifying the characteristics of hazardous waste.

In addition, all management personnel who will be assigned to the unloading area of the within the Facility and Plant Manager/Emergency Coordinators will attend an OSHA 24-hour Hazardous Waste Operations And Emergency Response (Hazwoper)

Training Program in accordance with 29 CFR 1910.120, and any refresher courses, as required.

This management plan and referenced documents will be explained and reviewed in detail with new employees in accordance with the Personnel Training Plan (MP-04).

4.4 Best Management Practices

Operations will be contained within the Operations Building to control noise, odor and dust associated with the processing of waste. During normal operation, waste will be received and processed in the same day. The processing equipment will be rinsed with water at the end of the shift to minimize odor generation and vector attraction.

Good housekeeping practices will be adopted to minimize odors throughout the Facility. All SSO handling stations and equipment will have washdown hoses nearby to allow for the machines to be cleaned daily. Self-recoiling hose reels will be used wherever practical. Catwalk access, equipment placement, drainage, building materials, and general design will all be assessed during planning to enable easy maintenance and cleaning of all plant areas. Green Era recognizes that keeping the equipment and building clean and free of organics will be critical to maintaining a comfortable and safe working environment.

All roadways to the Operations Building will be paved for truck and vehicular traffic to prevent dirt and waste from being carried into and out of the tipping floor on truck and equipment tires. Waste received at the Facility in dump trailers will be tipped directly into a live bottom receiving hopper, which will prevent the trucks from driving through waste or waste liquids. Drivers will be encouraged to rinse-off the truck tail gates and mud flaps after unloading. Garden hoses will be provided near the tipping wall for the drivers' use.

HEALTH AND SAFETY PLAN
Doc. No. MP-11
Green Era
Organics Recycling Facility

650 W. 83rd Street
Cook County, Chicago, Illinois 60620

Prepared By
Green Arrow Engineering
2759 Long Road
Wooster, OH 44691

REVISION LEVEL	DESCRIPTION	ISSUE DATE
R0	INITIAL RELEASE	07/21/21

Contents

Statement of Health and Safety Policy 1

Section A: General 2

A.1.0 General 2

A.2.0 OSHA Responsibility 2

A3.0 Management Commitment and Employee Involvement 3

A4.0 Training 3

Section B: Safe Work Rules 4

B.1.0 General 4

B.2.0 Medical Emergencies 5

B.3.0 Accidents 5

B.4.0 Personal Protective Equipment 6

B.5.0 Housekeeping 7

B.6.0 Hazard Communication 7

Section C: Emergencies 8

C.1.0 General Emergencies 8

C.2.0 Emergencies where evacuation is required 8

C.3.0 Regulatory Agency Inspections and Crisis Communications Management 9

Statement of Health and Safety Policy

Employees are Green Era's most valuable resource; therefore, protecting our employees from preventable injuries and illnesses is critical to the success of this business.
Green Era will operate in compliance with applicable occupational health and safety regulations and implement best practices for the waste handling facilities, anaerobic digesters, and wastewater treatment facilities.

Green Era will eliminate or minimize risks that may be associated with operations by providing safe equipment, proper training, and developing safe methods and procedures. Employee safety and risk mitigation will be evaluated for all planned work.

Each employee shall make health and safety an integral part of their daily routine. This responsibility must be accepted by each employee, regardless of the capacity in which they serve.

Working together we can minimize hazards and prevent accidents. We require your full cooperation and participation in making Green Era a safe place to work.

Section A: General

A.1.0 General

Employers are required to institute and maintain a program that provides systematic policies, procedures, and practices that protect their employees from, and allow them to recognize, job-related safety and health hazards.

An effective program includes provisions for the identification, evaluation, and prevention or control of general workplace hazards, specific job hazards, and potential hazards that may arise from foreseeable conditions.

Although compliance with the law, including specific OSHA standards, is an important objective, an effective program looks beyond specific requirements of law to address all hazards. It will seek to prevent injuries and illnesses, whether or not compliance is at issue.

The extent to which the program is described in writing is less important than how effective it is in practice. As the size of the company and the complexity of an operation increases, the need for written guidance also increases to ensure clear communication of policies and priorities as well as a consistent and fair application of rules.

A.2.0 OSHA Responsibility

The Occupational Safety and Health Administration (OSHA) evolved from the Occupational Safety and Health Act enacted by Congress in 1970. OSHA is the government agency which has overall responsibility for safety and health in the workplace. Both employer and employee have responsibilities for work site safety under the act.

OSHA provides that:

General Duty Clause:

Section 5 (Law 91-596)

a. The employer-

1. Shall furnish to each of his employees a place of employment which is free from recognized hazards that could cause death or serious physical harm to his employees and;

2. Shall comply with the occupation safety and health standards promulgated under the OSHA Act.

b. The employee-

1. Each employee shall comply with occupational safety and health standards and all rules and regulations, and orders issued pursuant to the OSHA Act which are applicable to his/her own action and conduct.

A3.0 Management Commitment and Employee Involvement

The elements of management commitment and employee involvement work together and form the basis of any occupational safety and health program. Green Era regards worker safety and health as a fundamental value of the organization. The following are steps taken by Green Era management and employees to ensure the integrity of the general health and safety program.

a. Green Era posts the Statement of Health and Safety Policy in an area visible to all employees and visitors so that the priority and importance of safety and health protection in the organization is constantly reinforced.

b. Achieving zero accidents is clearly understood among all employees and is a goal of the organization. Green Era supervisors are responsible for insuring safety implementation at their respective work areas. Green Era managers are charged with the responsibility of holding the supervisors, as well as the employees, accountable.

c. All employees are tasked with the on-site implementation of the written health and safety plan. The standard of zero accidents is emphasized and employee input to reduce the likelihood of accidents is implemented.

A4.0 Training

It is assumed that an employee hired by Green Era has not received any safety training. OSHA requires that employers instruct every employee in the recognition and avoidance of hazards that could lead to an accident. All Green Era employees will participate in health and safety training in the following manner:

a. Any new employee to Green Era will be given initial safety training. The training will include the contents of the policy and management and components of the Health and Safety Plan as well as the job specific training (*Personnel Training Plan, MP-04*). The company's commitment to the safety program will be expressed so the importance of complying is clearly understood.

b. Green Era will conduct annual training in the Health and Safety Plan. This training will review company safety rules, Green Era's

commitment for achieving zero accidents, accident reporting, and standard operating procedures. A review of any new operations or materials to be handled will also be discussed.

c. Quarterly safety meetings will be conducted with mandatory employee involvement. Topics of discussion will include, but not be limited to, new operating procedures, review of material safety data sheets, general safety rules and first aid. “Toolbox Talks” can be used for topics of discussion.

d. All training activities will be documented and attendance will be kept.

All Green Era employees will notify their supervisor about any safety and health issues that they feel may pose a risk. An investigation to determine the appropriate corrective action will be conducted and documented.

Section B: Safe Work Rules

The following general safe work rules are based on the typical industrial safety hazards as well as hazards inherent to Green Era operations.

B.1.0 General

The following general safe work rules apply to all Green Era employees and locations.

a. Drinking of alcoholic beverages during work hours is prohibited.

b. Employees are required to wear appropriate Personal Protective Equipment (PPE) for a given task or location. (see section B.4.0)

c. Employees must always follow Lock-Out/Tag-Out procedures when working on equipment or machinery. Particular caution must be observed when working on equipment where electrical shock is a potential hazard (See *SOP-21-003, Lock-Out/Tag-Out*)

d. Employees must be aware of the hazards associated with chemical or materials found in their specific job location. (See Green Era Emergency Response Plan)

e. Employees must use a fall protection system when working from heights in excess of 6 feet.

f. Employees must follow Confined Space procedures when working in “permit only” and “non-permit” designated confined spaces. (See *SOP-21-004, Confined Space Entry Procedure*)

g. Employees must follow all applicable highway rules and regulations when operating company vehicles or using personal vehicles for

company work.

h. The use of handheld electronic devices is prohibited when operating company vehicles or using personal vehicles for company work.

B.2.0 Medical Emergencies

Should a medical emergency occur in which the need to call for professional medical assistance is necessary, you should always:

a. Call 911

b. Remain calm, speak clearly and slowly

c. Give your exact location

d. Describe the situation

e. Give the phone number from where you are calling from

f. Do not hang up until you are told to do so

B.3.0 Accidents

Definitions:
Incident: No bodily harm, but resulting in equipment/property damage.

Accident: Bodily harm resulting in first aid, physician care or emergency procedures.

Near Miss: No bodily harm, however, avoided accident/incident which could have resulted in a serious/severe injury or serious property/equipment damage.

a. Should the accident result in a serious injury, the emergency procedures stated in Section B.2.0 of the Health & Safety Plan will be followed.

b. First aid will be administered should the accident be considered minor.

c. The employee involved in the minor accident, the Site Supervisor will then decide whether the employee should be seen by a physician. Transportation will be provided to the employee should the injury necessitate physician care and the Supervisor deems the employee unfit to drive himself.

d. In all cases, the Site Supervisor will then complete the necessary accident reporting and investigation procedure.

e. If the accident results in severe personal injury an ambulance will be called immediately. In addition, the operation associated with the accident will be shut down for immediate investigation by the Site Supervisor. The operation will not be restarted until the Supervisor determines the operation is safe.

f. An accident report will be filled out as soon as possible which will provide the necessary information needed for the medical care provider and insurance purposes.

g. A near-miss will be regarded as important as a serious or severe injury case. The Site Supervisor will conduct an investigation of the near-miss and take corrective action/ preventive action.

h. Incident will be investigated as well. Names of all involved personnel, including non-Green Era personnel, will be obtained. Pictures of damages and witness accounts will be recorded for insurance purposes.

B.4.0 Personal Protective Equipment

When Green Era employees' work tasks pose safety and/or health hazards, the use of Personal Protective Equipment (PPE) will be required.

a. **Hard hats** and high visibility clothing is required for all operating/visiting personnel within designated construction site boundaries.

b. **Safety glasses** will be required by all operating/visiting personnel in areas where the potential for eye injuries exists.

c. A **face shield** or **goggles** must be worn while working with any workplace chemicals/materials such as acids or base.

d. **Rubber soled work boots** must be worn at all times at construction sites and working anaerobic digestion systems. Closed toe shoes must be worn at all times in the laboratory.

e. A **lab jacket** must be worn when performing lab tasks.

f. **Hearing protection** will be worn in environments where the decibels exceed the OSHA standard. (example… engine rooms)

g. Appropriate **gloves** will be worn depending on the nature of the task being performed.

h. Other PPE may be required per the specific task being performed.

i. **Face masks** must be worn by employees and visitors to prevent spread of respiratory illness when social distancing of at least six feet cannot be maintained or as mandated by state or local health orders.

B.5.0 Housekeeping

Housekeeping is necessary to reduce the likelihood of accidents and fire potential. Each employee at Green Era is responsible for keeping the facility clean and organized.

a. Keep aisle ways, stairways, and walkways clear of debris and materials.

b. Return tools to their proper storage locations.

c. Properly store flammable and combustible materials. (labeled, sealed container) and segregate their location from general operating areas. The use of a flammable storage cabinet is required at all AD sites.

d. Keep electrical equipment, flammable storage units/areas, heating devices, etc. clean of accumulating dust and/or particulate from operations.

e. Segregate any indoor welding or cutting operations utilizing hot work screens.

f. Keep electrical cords off the ground; utilize ground fault circuit interrupters (GFCIs).

g. Eliminate tripping hazards as soon as they are recognized.

h. Keep entrances and exits free from being blocked.

i. All containers shall be sealed after use.

j. Neatly stack all stored materials.

k. Keep floor surface dry and clean. Use absorbent materials if necessary.

B.6.0 Hazard Communication

Material Safety Data Sheets (MSDS's) (or known as just SDS) are a source of information for workplace chemicals and materials. SDS's supply an employee with all pertinent information about the chemical or material in which he/she is using. Information such as the materials trade name,

toxicity characteristics, first aid procedures and spill response procedures is included on a SDS. SDS's are a vital source of information to physicians that may be treating a victim who was exposed to a certain material/chemical.

Section C: Emergencies

See the Green Era *Emergency Response Plan (MP-06)* for additional information.

C.1.0 General Emergencies

Situations may arise where the need to take immediate emergency action is required. These situations may include events such as fire, severe weather, power failures or medical emergencies as well as other unforeseen calamities. These events require immediate action performed in a calm and orderly manner. The following outline provides a procedure for managing these types of emergency situations.

a. Call 911 if the situation warrants additional emergency resources.

b. Identify yourself, your location and the nature of the emergency. Stay calm and provide information as requested.

c. Take action to prevent additional injury or property damage if this can be accomplished without the risk of personal injury.

d. If emergency crews are on site assist as directed.

e. Once the immediate emergency is under control, contact your Supervisor and other appropriate Green Era personnel and detail the event.

C.2.0 Emergencies where evacuation is required

In situations where extreme weather, catastrophic operational failure, explosion, etc. may occur the following evacuation procedure is to be followed. In order to keep the situation under control the Site Manager or Supervisor should take charge.

a. Call 911 and identify yourself, your location and the nature of the emergency. Stay calm and provide information as requested.

b. Alert all personnel of evacuation through direct or cell phone contact.

c. Gather personnel at pre-determined meeting area for head count.

d. If emergency crews are on site assist as directed.

e. Once the situation is under control, contact your Supervisor and other appropriate Green Era personnel and detail the event.

C.3.0 Regulatory Agency Inspections and Crisis Communications Management

Green Era's *Emergency Response Plan (MP-06)* provides instruction on how to respond to a regulatory agency inspection or communications with the media in the event of a "crisis". A "crisis" for the purposes of this procedure is a significant unexpected accident, emergency or dangerous situation. The *Spill Contingency Procedure, SOP-21-001* and the *Sewer Spill and Prevention Procedure, SOP-21-002* should be referenced for specific procedures related to a spill to the environment or an unintentional discharge to the Chicago sewer.

ENVIRONMENTAL

Environmental Engineers, Geologists and Scientists

Tel 847.573.8900
Fax 847.573.8953

Polo Park Business Center
27834 N. Irma Lee Circle
Lake Forest, Illinois 60045-5130

FUGITIVE DUST OPERATING PROGRAM
GREEN ERA RENEWABLE ENERGY & URBAN FARMING CAMPUS
650 WEST 83RD STREET
CHICAGO, ILLINOIS 60620-1937

DOC. NO. MP-12

October 29, 2021

DAI Project No. 7741

Prepared For:
Green Era 83rd Street, LLC
218 North Jefferson Street, Suite 300
Chicago, Illinois 60661-1307

Prepared By:
DAI Environmental, Inc.
27834 North Irma Lee Circle
Lake Forest, Illinois 60045

TABLE OF CONTENTS

LIST OF FIGURES i

LIST OF TABLES i

APC 391 FORM ii

1.0 INTRODUCTION 1
- 1.1 Site Description 1
- 1.2 Operating Program 2
- 1.3 Site Plan 3

2.0 ATTACHMENT TO APC 391 PART 7 4
- 2.1 Conveyors and Conveyor Transfer Points 4
- 2.2 Storage Piles 5
- 2.3 Paved Normal Traffic Roads/Paved Parking Lots 6

3.0 REPORTING REQUIREMENTS 8
- 3.1 Operating Program Amendment 8
- 3.2 Quarterly/Annual Reporting 8

LIST OF FIGURES

Site Location Map ..... Figure 1
Aerial View of Site and Surrounding Property Usage ..... Figure 2
Site Plan ..... Figure 3
Site Detail ..... Figure 3A

LIST OF APPENDICES

STOCKPILE INSPECTION FORM ..... APPENDIX A
DRIVEWAY DUST SUPPRESSION LOG ..... APPENDIX B
SUMMARY OF REVISIONS ..... APPENDIX C

©2021, DAI Environmental, Inc.

STATE OF ILLINOIS
ENVIRONMENTAL PROTECTION AGENCY
DIVISION OF AIR POLLUTION CONTROL
1021 NORTH GRAND AVENUE, EAST
SPRINGFIELD, ILLINOIS 62702

OPERATING PROGRAM FOR FUGITIVE PARTICULATE CONTROL	

1. THIS FORM IS USED TO APPLY FOR A FUGITIVE DUST OPERATING PROGRAM AS REQUIRED BY 35 IAC 212.309. COMPLETE THE FORM, KEEP ONE COPY FOR YOUR RECORDS, AND RETURN TWO COPIES TO THE ATTENTION OF BUREAU OF AIR PERMIT SECTION MANAGER AT THE ADDRESS LISTED ABOVE.

2a. NAME OF OWNER: Green Era 83rd Street, LLC		3a. NAME OE OPERATOR: Green Era 83rd Street, LLC	
2b. STREET ADDRESS OF OWNER: 218 North Jefferson Street, Suite 300		3b. STREET ADDRESS OF OPERATOR: Same as Owner	
2c. CITY OF OWNER: Chicago		3c. CITY OF OPERATOR:	
2d. STATE OF OWNER: IL	2e. ZIP CODE: 60661-1307	3d. STATE OF OPERATOR:	3e. ZIP CODE:

4a. NAME OF CORPORATE DIVISION OR PLANT: Green Era Renewable Energy & Urban Farming Campu		4b. STREET ADDRESS OF EMISSION SOURCE: 650 West 83rd Street		
4c. CITY OF EMISSION SOURCE: Chicago	4d. LOCATED WITHIN CITY LIMITS: ☒ YES ☐ NO	4e. TOWNSHIP:	4f. COUNTY: Cook	4g. ZIP CODE: 60620-1937

5. SUBMIT A SCALE MAP SHOWING ALL STORAGE PILES, CONVEYOR LOADING OPERATIONS, STORAGE PILE ACCESS ROADS, NORMAL TRAFFIC ROADS, PARKING FACILITIES, LOCATION OF UNLOADING AND TRANSPORTING OPERATIONS WITH POLLUTION CONTROL EQUIPMENT.

6a. DO STORAGE PILES CONTAIN A TOTAL OF MORE THAN 260,000 TONS OF MATERIAL IN A CALENDER YEAR? ☐ YES ☒ NO

6b. IF THE ANSWER TO 6a WAS YES, PLEASE SUBMIT THE FOLLOWING INFORMATION.

TOTAL AMOUNT OF MATERIAL IN THE STORAGE PILES: TONS/YEAR

AND SUBMIT AN ATTACHED SHEET DESCRIBING:

I) DETAILED OPERATING PROCEDURES AND CONTROL METHODS BY WHICH FUGITIVE PARTICULATES FROM THESE STORAGE PILES WILL BE MINIMIZED DURING LOADING, UNLOADING, PILE MAINTENANCE, AND WIND EROSION. HOW OFTEN WILL THESE PILES BE TREATED WITH SURFACTING AGENT? NAME THE TYPE AND CONCENTRATION OF SURFACTANT THAT WILL BE USED.

II) TYPE OF CONTROL METHODS USED FOR FUGITIVE PARTICULATE EMISSIONS FROM CONVEYOR LOADING OPERATIONS AND NORMAL TRAFFIC PATTERN ROADS SERVING THESE STORAGE PILES. IF SURFACTING AGENT IS USED STATE TYPE AND CONCENTRATION OF SURFACTING AGENT AND FREQUENCY OF ITS USE.

III) TYPE OF CONTROL METHODS USED FOR FUGITIVE PARTICULATE EMISSIONS FROM ALL PAVED OR UNPAVED PARKING LOTS AND NORMAL TRAFFIC PATTERN ROADS AT THIS FACILITY. IF ROADS ARE PAVED INDICATE FOOTAGE OF ROADS THAT WILL BE PAVED AND HOW FREQUENTLY THESE ROADS WILL BE CLEANED.

7. DOES THIS FACILITY HAVE ANY OF THE FOLLOWING SOURCES?	
a.) CRUSHERS	☐ YES ☒ NO
b.) GRINDING MILLS	☐ YES ☒ NO
c.) SCREENING OPERATIONS	☐ YES ☒ NO
d.) BUCKET ELEVATORS	☐ YES ☒ NO
e.) CONVEYORS	☒ YES ☐ NO
f.) CONVEYOR TRANSFER POINTS	☒ YES ☐ NO

g.) BAGGING OPERATIONS	☐ YES	☒ NO
h.) STORAGE BINS	☒ YES	☐ NO
i.) FINE PRODUCT TRUCK AND TRAILER LOADING OPERATIONS	☐ YES	☒ NO
j.) UNLOADING AND TRANSPORTING OPERATIONS OF MATERIAL COLLECTED BY POLLUTION CONTROL EQUIPMENT	☐ YES	☒ NO
k.) UNPAVED NORMAL TRAFFIC ROADS	☐ YES	☒ NO
l.) PAVED NORMAL TRAFFIC ROADS	☒ YES	☐ NO
m.) INPAVED PARKING LOTS	☐ YES	☒ NO
n.) PAVED PARKING LOTS	☒ YES	☐ NO

7b. FOR EACH SOURCE MARKED YES, ATTACH AN ADDITIONAL SHEET DESCRIBING THE TYPE OF CONTROL METHODS THAT WILL BE USED TO CONTROL FUGITIVE PARTICULATE EMISSIONS. IF SURFACTANT IS USED, STATE THE TYPE AND CONCENTRATION OF SURFACTANT AND FREQUENCY OF ITS APPLICATION. IF THE ROADS AND PARKING LOTS ARE PAVED, STATE THE FREQUENCY OF CLEANING.

8. VEHICULAR MILES TRAVEL INFORMATION:
THIS INFORMATION IS TO BE DETERMINED BY THE NUMBER OF CARS MULTIPLIED BY THE DISTANCE TRAVELED FOR THE FOLLOWING ROADS.

I) TRAFFIC ON UNPAVED NORMAL TRAFFIC ROADS IN	MILES PER YEAR	0
II) TRAFFIC ON PAVED NORMAL TRAFFIC ROADS IN	MILES PER YEAR	2,150
III) TRAFFIC ON UNPAVED PARKING LOTS IN	MILES PER YEAR	0
IV) TRAFFIC ON PAVED PARKING LOTS IN	MILES PER YEAR	250

9. IS THIS FUGITIVE PARTICULATE CONTROL PROGRAM IMPLEMENTED AT THE PRESENT? ☒ YES ☐ NO

10.

AUTHORIZED SIGNATURE (S): (D)

BY _____ 10/29/21
SIGNATURE DATE

Erika Allen
TYPED OR PRINTED NAME OF SIGNER

President
TITLE OF SIGNER

BY _____ 11/1/21
SIGNATURE DATE

Jason Feldman
TYPED OR PRINTED NAME OF SIGNER

CEO
TITLE OF SIGNER

This Agency is authorized to require this information under Illinois Revised Statutes, 1979, Chapter 111 1/2, Section 1039. Disclosure of this information is required under that Section. Failure to do so may prevent this form from being processed and could result in your application being denied. This form has been approved by the Forms Management Center.

1.0 INTRODUCTION

1.1 Site Description

Facility Owner, Address, and Telephone
Green Era 83rd Street, LLC
218 North Jefferson Street, Suite 300
Chicago, Illinois 60661-13074
Telephone: (708) 792-0649

Facility Operator, Address, and Telephone
Green Era 83rd Street, LLC
218 North Jefferson Street, Suite 300
Chicago, Illinois 60661-13074
Contact: Jason Feldman, Director
Telephone: (708) 792-0649

A formerly vacant property addressed as 650 West 83rd Street in Chicago, Illinois is being developed into a food waste (solid and liquid) recycling (composting) facility. The property is owned by Green Era Educational NFP. The facility and associated equipment are owned and operated by Green Era 83rd Street, LLC. Figure 1 is a topographical Site Location Map. The facility, referred to as the Green Era Renewable Energy and Urban Farming Campus (Green Era), will recycle food waste via conventional wet anaerobic digestion. In addition to anaerobic digestion (primary facility activities), the property will also be used for urban farming operations and as a community garden center.

The 8.905± acre property is a mixture of asphalt paved driveways/parking, buildings, and non-hardscape surface. Buildings on-site include the 35,000-ft^2 Processing Building, 5,600-ft^2 Compost Loading and Handling Building (Pole Barn), and a number of "hoop houses" (i.e., simple greenhouse structures) that will be used to perform indoor urban farming within the "Urban Agriculture Area." Areas without hardscape include the stormwater retention pond, the "Urban Agriculture Area," the community garden center, and various areas of general landscaping.

The facility is located in the Auburn Park neighborhood of Chicago within an industrial area bound by residential neighborhoods. The facility is bound by Aabbitt Adhesives, then a ComEd substation to the north; by South Wallace Street, then Diamond Waste Recycling or a vacant lot used for truck

©2021, DAI Environmental, Inc.

parking to the east; by West 83rd Street, then a church or Mahalia Jackson Park to the south; and by Metra railroad tracks, then a residential neighborhood to the west. Figure 2 is an aerial view of the development property and surrounding area.

The facility will operate as a food waste recycling facility, utilizing anaerobic digestion to create dewatered digestate cake as a finished product. As a by-product of the anaerobic digestion process, biogas, primarily composed of methane, will be generated. Typical operations at the facility will include the refining of the biogas, creating clean biomethane for injection into the natural gas utility, with the "tail gas" (containing the impurities removed from the biogas) burned via the on-site thermal oxidizer. When necessary, biogas that cannot be refined and upgraded to biomethane will be burned via the on-site flare. A processing building odor control system comprised of ionizers and an activated carbon guard bed will be permitted and operated to prevent odorous discharges from the processing building. Typical operations (i.e., when food waste is imported and preliminarily processed) will be from 7:00-17:00, Monday-Saturday. Operations may also occur periodically on Sundays. Regardless of typical operations, the processing building at the facility will be continuously monitored, with anaerobic digestion operations occurring in the digester tank constantly (24-hrs/day, 7-days/wk).

1.2 Operating Program

The Green Era facility has applied for a Lifetime Operating Permit with the Illinois Environmental Protection Agency (Illinois EPA). A permit has not yet been assigned for Application Number 21060012, but the facility has been assigned ID 031600TQW. Based upon the location of the facility within Cook County and the applicable SIC (4953), the general requirements of 35 IAC 212 Subpart K: *Fugitive Particulate Matter* are applicable per 35 IAC 212.302(b). Therefore, an operating program is required by 35 IAC 212.309.

This is the initial *Fugitive Dust Operating Program* (Operating Program) for this facility, completed to address all applicable requirements of 35 IAC 212.310. This document is an attachment to the Illinois EPA *Operating Program for Fugitive Emission Control* form (APC 391) and provides information not directly included on the APC 391 form. Per 35 IAC 212.301, "No person shall cause or allow the emission of fugitive particulate matter from any process…beyond the property line of

©2021, DAI Environmental, Inc.

the source." This Operating Program provides physical controls, standard operating procedures, and Best Management Practices (BMPs) implemented at the facility to prevent a release of visible fugitive particulate matter (PM) beyond property boundaries.

Ms. Erika Allen, President, and Mr. Jason Feldman, Director, have responsibility for the management of this Operating Program, as well as the periodic review and update required by 35 IAC 212.312. Various tasks may be delegated to appropriate personnel as applicable (e.g., inspections and physical dust suppression activities).

1.3 Site Plan

Part 5 of the APC 391 form and 35 IAC 212.310(c) specify various items to be included on a scaled map as part of the Operating Program. Figure 1 is a topographical Site Location Map, and Figure 2 provides an aerial view of the facility and surrounding property usage. Figures 3-3A provide a Site Plan and Site Detail, respectively, that show applicable required information including: storage piles and associated road/traffic patterns, conveyor loading operations, normal traffic roads, and traffic patterns, and parking facilities.

©2021, DAI Environmental, Inc.

2.0 ATTACHMENT TO APC 391 PART 7

The Green Era facility includes potential fugitive particulate matter emission sources. The below information details controls and BMPs in place to prevent fugitive PM emissions. No solids are collected/transferred from the flare, thermal oxidizer, or odor control system. Therefore, 35 IAC 212.307 (materials collected by pollution control equipment) regulations are not applicable to this facility.

2.1 Conveyors and Conveyor Transfer Points

Part 7(e) and 7(f) of the APC 391 form indicate that conveyors and conveyor transfer points are present at the facility. None of the conveyor operations are as described in 35 IAC 212.305 (i.e., conveyor transfer of solid materials into stockpiles).

The conveyors in use at the facility include several enclosed shaftless screw auger conveyors. All conveyors are located inside of the Processing Building.

A 2-step inclined, enclosed shaftless screw auger conveyor is used to transfer solids from the live-bottom receiving bunker in the basement of the Processing Building to the separation mill on the main floor of the Processing Building. Material rejected from the separation mill is conveyed away by a multi-step belt conveyor system to compactors located inside the Processing Building on the main floor. The homogenized slurry created in the separation mill is transferred via 2-step auger conveyor into the slope-bottom grit hopper. Solids that settle out of the slurry in the slope-bottom grit hopper will be transferred by a 2-stage inclined auger conveyor that connects to the multi-step belt conveyor system to compactors. Non-digestible materials screened from digestate (product of the anaerobic digestion process) via the in-line screw press will also drop into the multi-step auger conveyor system to compactors. Finished product created by the dewatering of the digestate will be directly loaded via multi-step auger conveyor system into trucks for shipment. All conveyors in use at the facility are depicted on Figure 3A.

©2021, DAI Environmental, Inc.

With all these conveyors being inside of a building under negative pressure and with all doors closed, no wetting or other dust suppression methods listed in 35 IAC 212.308 will be necessary. There is no threat of fugitive dust resulting from these conveyors that are located inside of a building

2.2 Storage Piles

Part 7(h) of the APC 391 form indicates that "storage bins" are present at the facility. The identification of "storage bins" is associated with the material storage piles (35 IAC 212.304) inside of the Pole Barn building (see Figures 3-3A). There are no actual storage bins. When not directly loaded onto trucks for off-site shipment or used on-site in the urban farming operations, excess finished product will be temporarily stockpiled inside the Pole Barn building. Temporary stockpiling of wood chips and coir (coconut shells) and mixing of these materials with the finished product will also take place within the Pole Barn. Loading of trucks from the storage pile will also be performed inside of the Pole Barn, with entry through one side and exit through the opposite side (i.e., drive through operation).

To prevent PM emissions beyond the property boundary, Green Era has implemented BMPs that include stockpiling indoors (i.e., covered as required by 35 IAC 212.304), keeping entrance/exit doors of the building closed when conditions are such that dust could be generated and blown out of the building, manually wetting of wood chips and coir (as necessary), and requiring that all trucks loaded at the facility be tarped before departure (i.e., compliance with cover requirement of by 35 IAC 212.315). The above BMPs will help ensure compliance with the opacity limitations (10%) specified in 35 IAC 212.316(d). Any other additional measures that are implemented to prevent fugitive dust and maintain compliance with opacity limits, if necessary, will be specified on the *Stockpile Inspection Form* (see blank example in Appendix A).

To comply with the record keeping requirements of 35 IAC 212.316(g), facility personnel will conduct inspections of stockpiles and document observations on the *Stockpile Inspection Form*. The inspection form provides information including: date, inspector's initials, the pile being inspected, notes on dust suppression methods utilized (if applicable), and any other comments related to potential dust generation. With stockpiles being located indoors, the occurrence of precipitation will not be used as an explanation for not performing inspection activities. Inspection activities will be

©2021, DAI Environmental, Inc.

performed during typical operation hours (7:00-17:00). In accordance with 35 IAC 212.316(g)(4), the records will be maintained for a period of at least 3-yrs.

2.3 Paved Normal Traffic Roads/Paved Parking Lots

Parts 7(l) and 7(n) of the APC 391 form indicate that paved "normal traffic roads" and parking lots, respectively, are present at the facility. The "normal traffic roads" at the facility consist of internal driveway areas that trucks and personnel vehicles travel upon during operation hours. Driveways include the facility entrance/exits at the northeast corner and center south property boundary, the area surrounding the Processing Building and outdoor storage tanks, and the connection to/from the Pole Barn (which will be a concrete slab-on-grade building). Parking areas are located to the southeast (3 spaces), south (7 spaces), and southwest (9 spaces) of the Processing Building. The driveways and parking areas at the facility are generally in daily use. As a matter of traffic control, all truck traffic uses the eastern entrance/exit located on South Wallace Street. The southern driveway that leads to West 83rd Street is for personal vehicles of facility personnel and public visitors. The driveway and parking areas are shown on Figures 3-3A. Figure 3 shows the traffic patterns through the facility.

Per 35 IAC 212.306, all normal traffic pattern roads and parking facilities at a manufacturing property "…shall be paved or treated with water, oils or chemical dust suppressants. All paved areas shall be cleaned on a regular basis. All areas treated with water, oils or chemical dust suppressants shall have the treatment applied on a regular basis, as needed…" All driveways and parking are asphalt paved. No unpaved parking or traffic areas are present at the facility. The concrete slab-on-grade building pad inside of the Pole Barn is the only "normal traffic pattern access areas surrounding storage piles" (as referenced in 35 IAC 212.306). Driveways outside of building are for vehicle movement only, and the parking areas are solely for personal vehicles. All regulated facility operations are conducted inside of the Processing Building and the Pole Barn. Therefore, these areas are not viewed as having a significant potential to generate fugitive emissions and limited dust controls are necessary.

Daily washdown activities will be conducted inside of the Processing Building. The concrete floor of the Pole Barn will also be regularly maintained, particularly during the periods when material

©2021, DAI Environmental, Inc.

stockpiling activities are being conducted. The facility may engage, as necessary, a street sweeping contractor to perform periodic general cleaning of the driveway/parking areas and/or if dust removal from paved areas is necessary to prevent fugitive dust and ensure compliance with opacity limitations (10%) specified in 35 IAC 212.316(c). Any other additional measures that are implemented to prevent fugitive dust and maintain compliance with opacity limits, if necessary, will be specified on the *Driveway Dust Suppression Log* (see blank example in Appendix B).

To comply with the record keeping requirements of 35 IAC 212.316(g), facility personnel will conduct inspections of driveways/parking areas and document observations on the *Driveway Dust Suppression Log*. The log provides information including: date, inspector's initials, applicable information requested by 35 IAC 212.316(g)(2)(d), and any other pertinent comments. Inspection activities will generally be performed during typical operation hours (7:00-17:00). Per 35 IAC 212.316(g)(4), the records are maintained for a period of at least 3-yrs.

©2021, DAI Environmental, Inc.

3.0 REPORTING REQUIREMENTS

3.1 Operating Program Amendment

Per 35 IAC 212.312, "The operating program shall be amended from time to time…" To meet the requirement, Green Era will conduct reviews of the Operating Program. If changes to the Operating Program are required, the updates will be completed in a timely manner and the updated Operating Program will be submitted to Illinois EPA for review. A form for tracking updates is provided in Appendix C.

3.2 Quarterly/Annual Reporting

Per 35 IAC 212.316(g)(1), an annual report shall be submitted to the Illinois EPA summarizing the fugitive dust control measures that are performed. The annual report shall include a cover letter and copies of completed documentation, specifically the *Stockpile Inspection Form* and the *Driveway Dust Suppression Log*. Quarterly reports will be submitted in compliance with 35 IAC 212.316(g)(5) during any quarter in which fugitive dust controls discussed within this Operating Program are not implemented (e.g., raining, so watering of roadway unnecessary). As required, quarterly reports shall be submitted to the Illinois EPA within 30-days of the end of the quarter (i.e., April 30th, July 30th, October 30th, and January 30th). The January submission shall serve as both the 4th quarter and annual report.

©2021, DAI Environmental, Inc.

FIGURES

©2021, DAI Environmental, Inc.

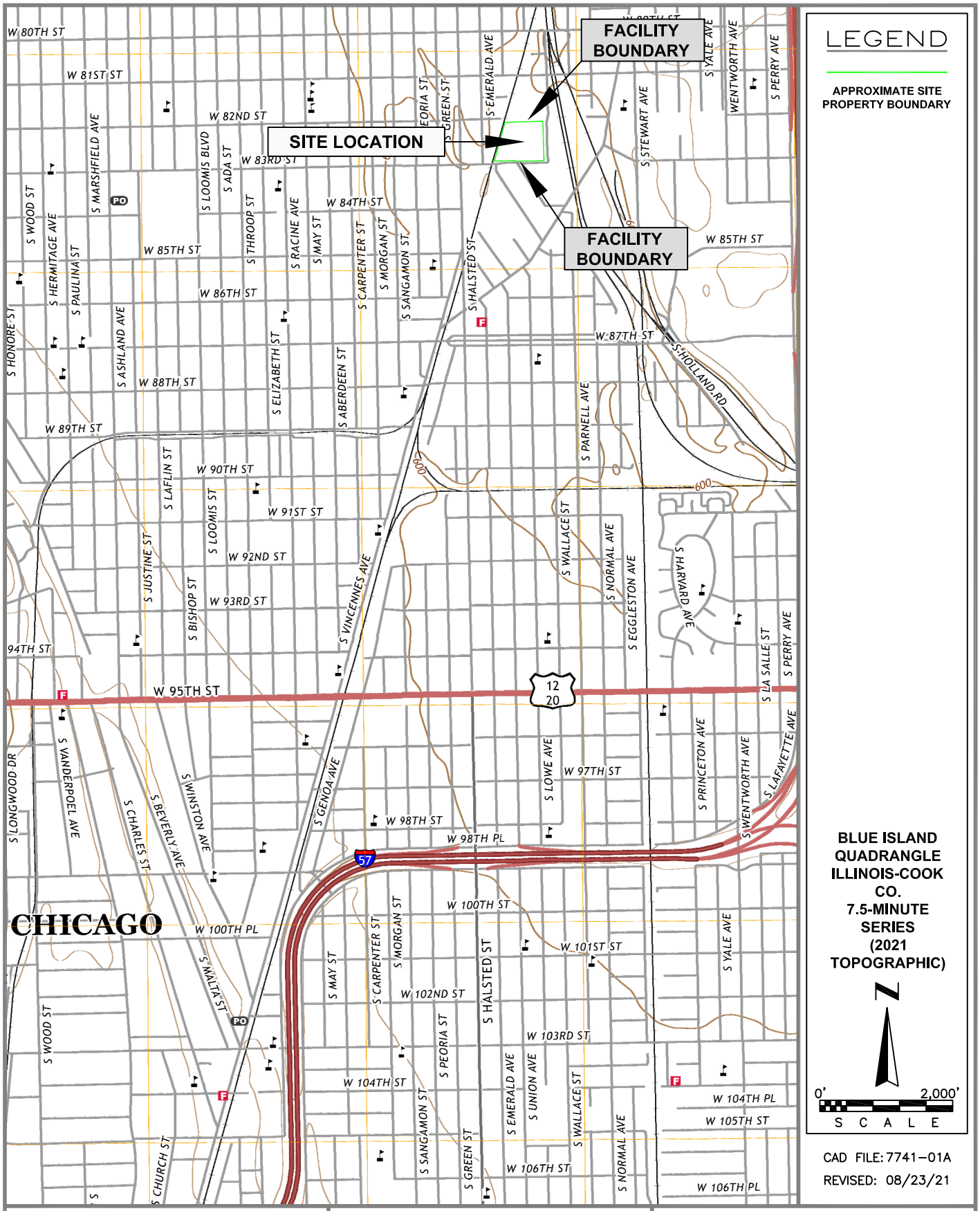

LEGEND

APPROXIMATE SITE PROPERTY BOUNDARY

BLUE ISLAND QUADRANGLE ILLINOIS-COOK CO. 7.5-MINUTE SERIES (2021 TOPOGRAPHIC)

N

0' 2,000'

S C A L E

CAD FILE: 7741-01A

REVISED: 08/23/21

DAI ENVIRONMENTAL

GREEN ERA RENEWABLE ENERGY AND URBAN FARMING CAMPUS
650 WEST 83RD STREET
CHICAGO, ILLINOIS

FIGURE 1
SITE LOCATION MAP

ENVIRONMENTAL DAI

GREEN ERA RENEWABLE ENERGY AND URBAN FARMING CAMPUS
650 WEST 83RD STREET
CHICAGO, ILLINOIS

FIGURE 2
AERIAL VIEW OF SITE AND SURROUNDING PROPERTY USAGE
(MAY 2021 AERIAL TAKEN GOOGLE MAPS)

AABBITT ADHESIVES, INC.

WEST 82ND STREET

SOUTH EMERALD AVENUE

RESIDENTIAL

RESIDENTIAL

RESIDENTIAL BOUNDARY

RESIDENTIAL

METRA

REGULATOR & GAS UTILITY CONNECTION

FACILITY BOUNDARY

WATER TOWER

T-105 DIGESTER AST (1,680,000-GAL)

T-100 BIOMASS EQUALIZATION AST (320,000-GAL)

3,000-GAL UNDERGROUND OVERFLOW SUMP

MCC

METER

COMP

REG

GC

PSA

COMP

BIOGAS UPGRADE EQUIPMENT SKIDS

COMPOST LOADING & HANDLING BUILDING (POLE BARN) (TEMPORARY INDOOR MATERIAL STOCKPILING)

THERMAL OXIDIZER

FLARE BURNER

PROCESSING BUILDING

LOWER LEVEL

ELEC

BLOWERS & UTILITY ROOM

KNIZER CARBON

UNDERGROUND PIPING

HVAC STACK

ELEC

OFFICE/ BATH

MUNICIPAL DUMPSTER ENCLOSURE

PARKING (9 SPACES)

PARKING (3 SPACES)

PARKING (7 SPACES)

VEGETATION

VEGETATION

VEGETATION

VEGETATION

VEGETATION

VEGETATION

HOOP HOUSE (INDOOR FARMING)

HOOP HOUSE (INDOOR FARMING)

HOOP HOUSE (INDOOR FARMING)

HOOP HOUSE (INDOOR FARMING)

URBAN AGRICULTURE AREA

SOUTH WALLACE STREET

DIAMOND WASTE & RECYCLING

TRUCK TRAILER PARKING

UNION PACIFIC RAILWAY

COMMUNITY GARDEN CENTER

STORMWATER POND

FACILITY BOUNDARY

FINAL MANHOLE

METER MANHOLE (OUTFALL 1A)

WEST 83RD STREET

UNDEVELOPED

CHURCH

MAHALIA JACKSON PARK

LEGEND

- PROPERTY BOUNDARY OF COMPOSTING FACILITY (8.095-ACRES)
- RAILROAD TRACKS
- GAS UTILITY
- BIOGAS/BIOMETHANE/TAIL GAS PIPING
- WATER UTILITY
- STORM SEWER
- SANITARY SEWER
- MWRD COMBINED SEWER (OFF-SITE)
- T — ELECTRICAL TRANSFORMER
- FENCING (6-FT HIGH)
- ASPHALT PAVING
- GRAVEL COVERING

N

0' 100'

S C A L E

CAD FILE: 7741-12 (Air)

REVISED: 12/13/21

DAI ENVIRONMENTAL

GREEN ERA RENEWABLE ENERGY
AND URBAN FARMING CAMPUS
650 WEST 83RD STREET
CHICAGO, ILLINOIS

FIGURE 3
SITE PLAN

METRA

ASPHALT DRIVEWAY

T-105 DIGESTER AST (1,680,000-GAL)

T-100 BIOMASS EQUALIZATION AST (320,000-GAL)

5,000-GAL UNDERGROUND OVERFLOW SUMP

T

MCC

GC

METER

COMP.

REG.

PSA

COMP.

BIOGAS UPGRADE EQUIPMENT SKIDS

ASPHALT DRIVEWAY

COMPOST LOADING & HANDLING BUILDING (POLE BARN) (TEMPORARY INDOOR MATERIAL STOCKPILING)

NON-DIGESTIBLE WASTE TRASH COMPACTORS (40-YD^3), MAIN FLOOR

TANKER TRUCK RECEIVING/UNLOADING (LIQUID FOOD WASTE)

TRUCK RAMP (PACKAGED FOOD RECEIVING)

TANK T-205, SCREENED DIGESTATE (30,000-GAL)

LIQUID FOOD/WASH WATER TANKS (30,000-GAL EACH)

TANK T-050A

TANK T-050

S-205 SCREEN PRESS (IN-LINE SOLIDS REMOVALS)

THERMAL OXIDIZER (EMISSIONS)

FLARE BURNER (EMISSIONS)

BOILERS

IONIZER CANNON

H-062 LIVE-BOTTOM RECEIVING BUNKER, SUB-GRADE (90-YD^3)

PUMP

PUMP

RECEIVING BAY/ UNLOADING TO BUNKER (SOLID FOOD WASTE)

CARBON GUARD BED

FIRE SUPPRESSION SYSTEM WATER CONNECTION

T-065 GRIT SEPARATION TANK (5,500-GAL)

S-063 SEPARATION MILL

T-210B POLYMER TANK (2000-GAL)

INDOOR SOLID FOOD WASTE STOCKPILING AREA (MAIN FLOOR)

HVAC STACK

FUTURE RECEIVING BAY

T-210A FUTURE POLYMER TANK & T-210C SPARE (14,000-GAL EACH)

T-210C

T-210A

T-251 SPARE TANK (30,000-GAL)

T-250B

T-250A

FILTRATE TANKS (30,000-GAL EACH)

T-211 FLOC TANK (200-GAL) & Y-211 BELT PRESS

SEMI-TRUCK LOADING (FINISHED PRODUCT)

PROCESSING BUILDING

HOOP HOUSE (INDOOR FARMING)

HOOP HOUSE (INDOOR FARMING)

HOOP HOUSE (INDOOR FARMING)

HOOP HOUSE (INDOOR FARMING)

URBAN AGRICULTURE AREA

ASPHALT DRIVEWAY

VEGETATION

VEGETATION

PARKING (9 SPACES)

MUNICIPAL DUMPSTER ENCLOSURE

VEGETATION

PARKING (3 SPACES)

LEGEND

- PROPERTY BOUNDARY OF COMPOSTING FACILITY (8.095-ACRES)
- RAILROAD TRACKS
- BIOGAS/BIOMETHANE/TAIL GAS PIPING
- WATER UTILITY
- PROCESS PIPING (FOOD WASTE SLURRY, DIGESTATE, FILTRATE)
- TRENCH DRAIN AND SUMP PIT
- T — ELECTRICAL TRANSFORMER
- FENCING (6-FT HIGH)
- GRAVEL COVERING
- LOWER LEVEL LEVEL OF BUILDING
- CONVEYOR UNIT
- SUB-GRADE STORAGE TANK (LOWER LEVEL LEVEL OF BUILDING)
- TRUCK ROUTING

N

0' 50'

S C A L E

CAD FILE: 7741-13 (Fug)

REVISED: 12/13/21

DAI ENVIRONMENTAL

GREEN ERA RENEWABLE ENERGY
AND URBAN FARMING CAMPUS
650 WEST 83RD STREET
CHICAGO, ILLINOIS

FIGURE 3A
SITE DETAIL SHOWING
PROCESS OPERATIONS AND EQUIPMENT

APPENDIX A
STOCKPILE INSPECTION FORM
(BLANK EXAMPLE)

©2021, DAI Environmental, Inc.

Facility
Green Era Renewable Energy
650 West 83rd Street
Chicago, IL 60620

STOCKPILE INSPECTION FORM

MONTH_____ **YEAR** _____

Owner/Operator
Green Era 83rd Street, LLC
218 North Jefferson Street, Suite 300
Chicago, IL 60661

Day of Month*	Visual Observation** Finished Product	Visual Observation** Wood Chips	Visual Observation** Coir	Visual Observation** Other – specify in comments	Comments***	Initials of Inspector
1						
2						
3						
4						
5						
6						
7						
8						

***NOTE – On hot, dry days and/or when winds are sufficiently strong to cause drying and blowing, you should consider conducting stockpile observations more frequently.**

****Observations: NSP – No stockpile for inspection**
Dry – Stockpile dry and capable of creating dust (if noted, note in comments how dust generation prevented)
Wet – Stockpile material adequately wet to prevent dust
NP – Not performed (provide comments)

*****Comments – Add any other pertinent information-for example, note "no concerns, all storage indoors."**

MAINTAIN RECORDS FOR 3-YEARS, MINIMUM

Facility
Green Era Renewable Energy
650 West 83rd Street
Chicago, IL 60620

STOCKPILE INSPECTION FORM

MONTH_____ **YEAR** _____

Owner/Operator
Green Era 83rd Street, LLC
218 North Jefferson Street, Suite 300
Chicago, IL 60661

Day of Month*	Visual Observation** Finished Product	Visual Observation** Wood Chips	Visual Observation** Coir	Visual Observation** Other – specify in comments	Comments***	Initials of Inspector
9						
10						
11						
12						
13						
14						
15						
16						

***NOTE – On hot, dry days and/or when winds are sufficiently strong to cause drying and blowing, you should consider conducting stockpile observations more frequently.**

****Observations: NSP – No stockpile for inspection**
Dry – Stockpile dry and capable of creating dust (if noted, note in comments how dust generation prevented)
Wet – Stockpile material adequately wet to prevent dust
NP – Not performed (provide comments)

*****Comments – Add any other pertinent information-for example, note "no concerns, all storage indoors."**

MAINTAIN RECORDS FOR 3-YEARS, MINIMUM

Facility
Green Era Renewable Energy
650 West 83rd Street
Chicago, IL 60620

STOCKPILE INSPECTION FORM

MONTH_____ **YEAR** _____

Owner/Operator
Green Era 83rd Street, LLC
218 North Jefferson Street, Suite 300
Chicago, IL 60661

Day of Month*	Visual Observation** Finished Product	Visual Observation** Wood Chips	Visual Observation** Coir	Visual Observation** Other – specify in comments	Comments***	Initials of Inspector
17						
18						
19						
20						
21						
22						
23						
24						

***NOTE – On hot, dry days and/or when winds are sufficiently strong to cause drying and blowing, you should consider conducting stockpile observations more frequently.**

****Observations: NSP – No stockpile for inspection**
Dry – Stockpile dry and capable of creating dust (if noted, note in comments how dust generation prevented)
Wet – Stockpile material adequately wet to prevent dust
NP – Not performed (provide comments)

*****Comments – Add any other pertinent information-for example, note "no concerns, all storage indoors."**

MAINTAIN RECORDS FOR 3-YEARS, MINIMUM

Facility
Green Era Renewable Energy
650 West 83rd Street
Chicago, IL 60620

STOCKPILE INSPECTION FORM

MONTH_____ **YEAR** _____

Owner/Operator
Green Era 83rd Street, LLC
218 North Jefferson Street, Suite 300
Chicago, IL 60661

Day of Month*	Visual Observation** Finished Product	Visual Observation** Wood Chips	Visual Observation** Coir	Visual Observation** Other – specify in comments	Comments***	Initials of Inspector
25						
26						
27						
28						
29						
30						
31						

***NOTE – On hot, dry days and/or when winds are sufficiently strong to cause drying and blowing, you should consider conducting stockpile observations more frequently.**

****Observations: NSP – No stockpile for inspection**
Dry – Stockpile dry and capable of creating dust (if noted, note in comments how dust generation prevented)
Wet – Stockpile material adequately wet to prevent dust
NP – Not performed (provide comments)

*****Comments – Add any other pertinent information-for example, note "no concerns, all storage indoors."**

MAINTAIN RECORDS FOR 3-YEARS, MINIMUM

APPENDIX B
DRIVEWAY DUST SUPPRESSION LOG
(BLANK EXAMPLE)

©2021, DAI Environmental, Inc.

Facility
Green Era Renewable Energy
650 West 83rd Street
Chicago, IL 60620

DRIVEWAY DUST SUPPRESSION LOG

MONTH_____ **YEAR** _____

Owner/Operator
Green Era 83rd Street, LLC
218 North Jefferson Street, Suite 300
Chicago, IL 60661

Day of Month	Visual Observation* Outside Driveways/Parking	Visual Observation* Processing Building Floor	Visual Observation* Pole Barn Floor	Comments***	Initials of Inspector
1					
2					
3					
4					
5					
6					
7					
8					

***Observations:** **Clean – Conditions sufficient to prevent dust generation**
Dirty – Cleaning required to prevent dust generation (if noted, provide comments on cleaning or other dust generation prevention activities)**
Wet – Adequately wet to prevent dust generation
NP – Not performed (provide comments)

**** – If cleaning or other dust generation prevention activities required, provide appropriate description and ensure all items from 35 IAC 212.316(g)(2)(D) are noted in Comments. For water/chemical application, include location controlled, application rate, frequency, and width, and total volume applied. If chemical applied, specify type and dilution. If physical controls utilized (e.g., sweeping), provide adequate information similar to water/chemical application.**

*****Comments – Add any other pertinent information. For example, add a note such as "rain," "driveway is wet," or "no dust being generated." Also provide justification if dust suppression is required but not performed.**

MAINTAIN RECORDS FOR 3-YEARS, MINIMUM

Facility
Green Era Renewable Energy
650 West 83rd Street
Chicago, IL 60620

DRIVEWAY DUST SUPPRESSION LOG

MONTH_____ **YEAR** _____

Owner/Operator
Green Era 83rd Street, LLC
218 North Jefferson Street, Suite 300
Chicago, IL 60661

Day of Month	Visual Observation* Outside Driveways/Parking	Visual Observation* Processing Building Floor	Visual Observation* Pole Barn Floor	Comments***	Initials of Inspector
9					
10					
11					
12					
13					
14					
15					
16					

***Observations:** **Clean – Conditions sufficient to prevent dust generation**
Dirty – Cleaning required to prevent dust generation (if noted, provide comments on cleaning or other dust generation prevention activities)**
Wet – Adequately wet to prevent dust generation
NP – Not performed (provide comments)

**** – If cleaning or other dust generation prevention activities required, provide appropriate description and ensure all items from 35 IAC 212.316(g)(2)(D) are noted in Comments. For water/chemical application, include location controlled, application rate, frequency, and width, and total volume applied. If chemical applied, specify type and dilution. If physical controls utilized (e.g., sweeping), provide adequate information similar to water/chemical application.**

*****Comments – Add any other pertinent information. For example, add a note such as "rain," "driveway is wet," or "no dust being generated." Also provide justification if dust suppression is required but not performed.**

MAINTAIN RECORDS FOR 3-YEARS, MINIMUM

Facility
Green Era Renewable Energy
650 West 83rd Street
Chicago, IL 60620

DRIVEWAY DUST SUPPRESSION LOG

MONTH_____ **YEAR** _____

Owner/Operator
Green Era 83rd Street, LLC
218 North Jefferson Street, Suite 300
Chicago, IL 60661

Day of Month	Visual Observation* Outside Driveways/Parking	Visual Observation* Processing Building Floor	Visual Observation* Pole Barn Floor	Comments***	Initials of Inspector
17					
18					
19					
20					
21					
22					
23					
24					

***Observations:** **Clean – Conditions sufficient to prevent dust generation**
Dirty – Cleaning required to prevent dust generation (if noted, provide comments on cleaning or other dust generation prevention activities)**
Wet – Adequately wet to prevent dust generation
NP – Not performed (provide comments)

**** – If cleaning or other dust generation prevention activities required, provide appropriate description and ensure all items from 35 IAC 212.316(g)(2)(D) are noted in Comments. For water/chemical application, include location controlled, application rate, frequency, and width, and total volume applied. If chemical applied, specify type and dilution. If physical controls utilized (e.g., sweeping), provide adequate information similar to water/chemical application.**

****Comments – Add any other pertinent information. For example, add a note such as "rain," "driveway is wet," or "no dust being generated." Also provide justification if dust suppression is required but not performed.**

MAINTAIN RECORDS FOR 3-YEARS, MINIMUM

Facility
Green Era Renewable Energy
650 West 83rd Street
Chicago, IL 60620

DRIVEWAY DUST SUPPRESSION LOG

MONTH_____ **YEAR** _____

Owner/Operator
Green Era 83rd Street, LLC
218 North Jefferson Street, Suite 300
Chicago, IL 60661

Day of Month	Visual Observation* Outside Driveways/Parking	Visual Observation* Processing Building Floor	Visual Observation* Pole Barn Floor	Comments***	Initials of Inspector
25					
26					
27					
28					
29					
30					
31					

***Observations:** **Clean – Conditions sufficient to prevent dust generation**
Dirty – Cleaning required to prevent dust generation (if noted, provide comments on cleaning or other dust generation prevention activities)**
Wet – Adequately wet to prevent dust generation
NP – Not performed (provide comments)

**** – If cleaning or other dust generation prevention activities required, provide appropriate description and ensure all items from 35 IAC 212.316(g)(2)(D) are noted in Comments. For water/chemical application, include location controlled, application rate, frequency, and width, and total volume applied. If chemical applied, specify type and dilution. If physical controls utilized (e.g., sweeping), provide adequate information similar to water/chemical application.**

****Comments – Add any other pertinent information. For example, add a note such as "rain," "driveway is wet," or "no dust being generated." Also provide justification if dust suppression is required but not performed.**

MAINTAIN RECORDS FOR 3-YEARS, MINIMUM

APPENDIX C
SUMMARY OF REVISIONS

©2021, DAI Environmental, Inc.

This table provides a summary of revisions/modifications to the facility Fugitive Dust Operating Program

Original Date of Plan: October 29, 2021

Date	Revised Section	Brief Description of Modification	Reason for Modification

Green Era	**Feedstock Manifest Form**	FORM-21-001 Revision: 0 Effective: 10/02/21 Reviewed: 10/02/21

General Feedstock Manifest Form that may be provided to generators or haulers that do not have manifests that are complaint with Green Era SOP-21-007.

Green Era Feedstock Manifest #_____

Date _____ **Time of Pickup** _____

Generator _____ **Generator Contact** _____

Street Address _____ **City, State** _____

Phone No _____

Hauler Company _____ **Truck No** _____

Truck Driver Name _____ **Trailer No** _____

Description of Load _____

Product Name(s) _____

Load Volume or Weight Certification

Treatment Facility

Green Era

650 W 83rd Chicago

operations@greenerachicago.com

708-792-0649

Gross Weight (lbs) _____

Tare Weight (lbs) _____

Net Weight (lbs) _____

Total Volume (gallons) _____

Weight or volume is required. Attach scale tickets.

I certify that a trailer calibration chart was used to determine the volume of the load, and that I personally witnessed the intake and outage measurement for the volume listed above. I certify that the non-hazardous organic waste in this load was generated by the listed facility, that the waste does not contain pollutants of regulatory concern in excess of 35 IL Admin Code § 830 Table A., and the waste is consistent with Green Era's feedstock acceptance criteria. I further certify that the load has been under my custody from the point of pickup at the generator to delivery to this facility.

Plant Operator

Signature _____

Print _____

Driver

Signature _____

Print _____

Green Era Rules:

1. Only waste products that have been pre-approved from known generators are accepted at this facility.
2. Inflow materials must be non-hazardous and below ceiling limits for As, Cd, Cr, Cu, Pb, Hg, Ni, Se, and Zn in 35 IL Admin Code § 830 Table A.
3. For acceptance, loads must comply with document SOP-21-006, Feedstock Acceptance Guidelines. See posted notice or request an electronic copy from the plant operator.
4. Site hours are 6 AM to 4 PM, Monday through Saturday. Loads may be accepted outside of these hours by appointment only.

Green Era	FORM Confined Space Entry Permit	FORM-21-002 Revision: 0 Effective: 07/21/21 Reviewed: 07/21/21

Date:

Confined Space Location	Desc.	ID No. YYMMDD-##, ie..210216-01
Purpose of Entry:		

Time In: _____ **Permit Canceled Time:** _____

Time Out: _____ **Reason Permit Canceled:** _____

Supervisor	Emergency/Rescue Services

Hazards of Confined Space	Yes	No	Special Requirements	Yes	No
Oxygen deficiency			Hot Work Permit Required		
Combustible gas/vapor			Lockout/Tagout		
Combustible dust			Lines broken, capped, or blanked		
Carbon Monoxide			Purge-flush and vent		
Hydrogen Sulfide			Secure Area-Post and Flag		
Toxic gas/vapor			Ventilation		
Toxic fumes			Other- List:		
Skin- chemical hazards			**Special Equipment**		
Electrical hazard			Breathing apparatus- respirator		
Mechanical hazard			Escape harness required		
Engulfment hazard			Tripod emergency escape unit		
Entrapment hazard			Lifelines		
Thermal hazard			Lighting (explosive proof/low voltage)		
Slip or fall hazard			PPE- goggles, gloves, clothing, etc.		
			Fire Extinguisher		

Communication Procedures

DO NOT ENTER IF PERMISSABLE ENTRY LEVELS ARE EXCEEDED		**Test Start and Stop Time:** **Start**	**Stop**
	Permissible Entry Level		
% of Oxygen	19.5 % to 23.5 %		
% of LEL	Less than 10%		
Carbon Monoxide	35 PPM (8 hr.)		
Hydrogen Sulfide	10 PPM (8 hr.)		
Other			

Name(s) or Person(s) testing: _____

Test Instrument(s) used- Include Name, Model, Serial Number and Date Last Calibrated:

CFM-Ventilation	Size-Cubic Feet	Pre Entry Time	❑ Supervisor Notified Before Entrance	Time Notified:
			❑ Supervisor Notified After Entrance	Time Notified:

Authorized Entrants	Authorized Attendants

PERMIT AUTHORIZATION **I Certify that all actions and conditions necessary for safe entry have been performed.**	
Name-Print:	
Signature:	
Date:	Time:

Green Era	**FORM** **Confined Space Entry Permit**	FORM-21-002 Revision: 0 Effective: 07/21/21 Reviewed: 07/21/21

Entry Procedure Checklist: Complete the following steps before, during, and after a confined space entry:

☐ Step 1

Obtain a Permit-Confined Space Entry Form from Plant Manager. Confirm training of all entrants with SOP-21-004 Confined Space Entry.

☐ **Step 2**

Notify Supervisor before the **Confined Space Entry Step 3**

Verify 4-gas Meter has been calibrated and is in working order

☐ **Step 4**

Complete the top portion of the Permit-Confined Space Entry Form

☐ **Step 5**

Ensure all rescue equipment (e.g. tripod, body-belt, lanyard) is in place prior to entry

☐ **Step 6**

Monitor the confined space with a 4-Gas Detector prior to entry. The entrant and attendant should sign the permit authorization section on the bottom of the permit to ensure all actions and conditions necessary for safe entry have been performed.

☐ **Step 7**

Employee entering the confined space should wear the 4-Gas Detector after the pre-atmosphere test. The employee should also have a full body harness and lanyard attached to the rescue tripod. Employee shall have a radio and any other necessary personal protective equipment.

☐ **Step 8**

Employee can enter the confined once Step 7 is completed. The entrant and attendant should complete the Hazards of Confined Spaces and Special Requirements Section of the Permit-Confined Space Entry Form once the employee is within the confined space. The entrant should also gather the % Oxygen, % Explosive Gases, Carbon Monoxide, and Hydrogen Sulfide readings and communicate them to the attendant to place on the Permit Form.

☐ **Step 9**

The attendant should maintain constant communication with the entrant until the entrant has exited the confined space.

☐ **Step 10**

The attendant should contact Supervisor once the entrant has exited the confined space.

☐ **Step 11**

The Permit-Confined Space Entry Form should be given to program coordinator, to file in the Confined Space Records.

References:

1. SOP-21-004 Confined Space Entry

Green Era	**Odor Observation Form**	FORM-21-003 Revision: 0 Effective: 10/02/21 Reviewed: 10/02/21

Print hard copies or complete on a mobile tablet using a PDF form.

Scan in any hard copies. Save scanned copies or electronic forms to Green Era cloud storage. Retain scanned copy for at least 36 months.

References:

1. MP-08 Odor Control Plan
2. MP-09 Odor Monitoring and Surveillance Plan

Green Era

Odor Observation Form

Observer Name: _____ Date: _____

Weather Conditions	Clear	Partly Cloudy	Mostly Cloudy	Overcast	Hazy
Precipitation	None	Fog	Rain	Sleet	Snow
Direction Wind is From	N	NW	W	SW	S	SE	E	NE
Wind Speed	Calm	1-5 MPH	5-15 MPH	15 - higher

Temperature: _____ °F Relative Humidity: _____ % Barometric Pressure: _____ Inches Hg

Is a printout of weather data attached? _____ Weather data source? _____

Odor Wheel Descriptors:

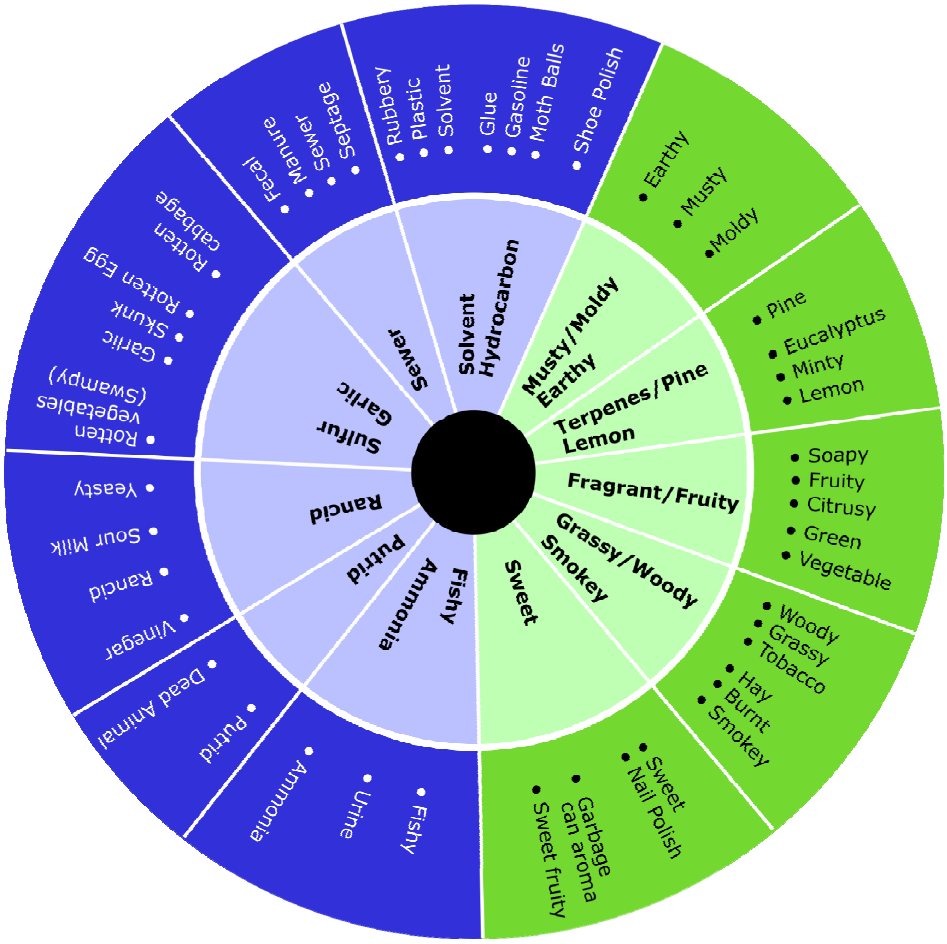

Odor Observation Form

Location: _____ Time: _____

Duration: _____ Dilution Threshold (D/T): _____ Source: _____

Notes:

Location: _____ Time: _____

Duration: _____ Dilution Threshold (D/T): _____ Source: _____

Notes:

Location: _____ Time: _____

Duration: _____ Dilution Threshold (D/T): _____ Source: _____

Notes:

Odor Observation Form

Location: _____ Time: _____

Duration: _____ Dilution Threshold (D/T): _____ Source: _____

Notes:

Location: _____ Time: _____

Duration: _____ Dilution Threshold (D/T): _____ Source: _____

Notes:

Location: _____ Time: _____

Duration: _____ Dilution Threshold (D/T): _____ Source: _____

Notes:

Odor Observation Form

Location: _____ Time: _____

Duration: _____ Dilution Threshold (D/T): _____ Source: _____

Notes:

Location: _____ Time: _____

Duration: _____ Dilution Threshold (D/T): _____ Source: _____

Notes:

Location: _____ Time: _____

Duration: _____ Dilution Threshold (D/T): _____ Source: _____

Notes:

Green Era	**Odor Complaint Form**	FORM-21-004 Revision: 0 Effective: 10/02/21 Reviewed: 10/02/21

Print hard copies or complete on a mobile tablet or laptop computer using a PDF form.

Scan in any hard copies. Save scanned copies or electronic forms to Green Era cloud storage. Retain scanned copy for at least 36 months.

References:

1. MP-08 Odor Control Plan
2. MP-09 Odor Monitoring and Surveillance Plan

Green Era

Odor Complaint Form

Investigator Name: _____ Log Date: _____

Complaint Information

Date Observed _____ Time first observed: _____

Is the odor noticeable now? Yes No

Duration

Intermittent	Less than 15 Min	Less than 30 Min	Less than 1 hour
Less than 4 hours	Less than 8 hours	Less than 1 day	Multiple Days

Where do you notice the odor?

Outdoors	Indoors windows closed	Indoors windows open
On roadway		

Odor Intensity Scale

	1	Odor characteristics may or may not be distinguished and/or definite, but not objectionable in short durations. This is characterized by occasional “whiffs” of odor, but is not persistent.
	2	Odor is very distinct and clearly distinguishable, tends to be objectionable and/or irritating, and is persistent in the community.
	3	Odor present in the air, which is objectionable and causes a person to attempt to avoid it completely.
	4	Odor present in the air, which is so strong that it is overpowering and intolerable for any length of time.

Description of odor in observer’s words

Odor Complaint Form

Location Details as available

House Number: _____

Street Name: _____

GPS: _____ _____
Latitude Longitude

Observer contact Information

Name:	
Street Address:	
Preferred Phone:	
E-mail:	

Report weather data for the time/date when the odor was observed.

Weather Conditions	Clear	Partly Cloudy	Mostly Cloudy	Overcast	Hazy			
Precipitation	None	Fog	Rain	Sleet	Snow			
Direction Wind is From	N	NW	W	SW	S	SE	E	NE
Wind Speed	Calm	1-5 MPH	5-15 MPH	15 - higher				

Temperature: _____ °F Relative Humidity: _____ % Barometric Pressure: _____ Inches Hg

Is a printout of weather data attached? _____ Weather data source? _____

Investigator Comments (list expected odor source and any abnormal operating conditions)

Green Era	**Outbound Manifest Form** **Cake Solids**	FORM-21-005 Revision: 0 Effective: 10/02/21 Reviewed: 10/02/21

General Outbound Manifest Form for Cake Solids. A manifest must be completed for each load of cake solids that leaves the facility. The driver will provide a copy of the manifest to the customer, the trucking company will retain a copy, and the original will be returned by the trucking company to Green Era when the empty trailer is returned.

Green Era

Outbound Manifest
Cake Solids

#_____

Date _____ **Time of Pickup** _____

Generator Green Era **Time of Delivery** _____

Street Address 650 W 83 St _____

Phone No 708-792-0649

Hauler Company _____ **Truck No** _____

Truck Driver Name _____ **Trailer No** _____

Description of Load dewatered solids from food waste digestion, non-classified, non-haz.

Product Name(s) Cake solids **Avg. Total Solids %** _____

Weight Certification

Receiving Facility

Urban Growers, South Farm

9000 S Mackinaw Ave, Chicago 60617

info@urbangrowerscollective.org

773-376-8882

Gross Weight (lbs) _____

Tare Weight (lbs) _____

Net Weight (lbs) _____

Total Volume (gallons) _____

Weight or volume is required. Attach scale tickets.

I certify that the non-hazardous organic waste in this load was generated by the listed facility. I further certify that the load has been under my custody from the point of pickup at the generator to delivery to this facility.

Plant Operator

Signature _____

Print _____

Driver

Signature _____

Print _____

Waste Quality:

1. Cake is produced from anaerobic digestion of organic food waste and is an organic product suitable for unrestricted use as a soil amendment. No biosolids have been used in this product.
2. Cake is non-hazardous and below ceiling limits for As, Cd, Cr, Cu, Pb, Hg, Ni, Se, and Zn in 35 IL Admin Code § 830 Table A.
3. Cake has been treated with a process to further reduce pathogen levels and meets Performance Standards for General Use Compost as defined in 35 IL Admin Code § 830.503.

Green Era	**Outbound Manifest Form** **Packaging Waste**	FORM-21-006 Revision: 0 Effective: 10/02/21 Reviewed: 10/02/21

General Outbound Manifest Form for separated packaging waste. A manifest must be completed for each load of waste that leaves the facility. The driver will provide a copy of the manifest to the landfill, the trucking company will retain a copy, and the original will be returned by the trucking company to Green Era when the empty trailer is returned.

Green Era

Outbound Manifest
Packaging Waste

#_____

Date _____ **Time of Pickup** _____

Generator Green Era **Time of Delivery** _____

Street Address 650 W 83 St _____

Phone No 708-792-0649

Hauler Company _____ **Truck No** _____

Truck Driver Name _____ **Compactor No** _____

Description of Load MSW (waste packaging)

Product Name(s) Waste Packaging

Weight Certification

Receiving Facility

Landfill

Address

Email

phone

Gross Weight (lbs) _____

Tare Weight (lbs) _____

Net Weight (lbs) _____

Total Volume (gallons) _____

Weight or volume is required. Attach scale tickets.

I certify that the non-hazardous organic waste in this load was generated by the listed facility. I further certify that the load has been under my custody from the point of pickup at the generator to delivery to this facility.

Plant Operator

Signature _____

Print _____

Driver

Signature _____

Print _____

Green Era	**Waste Generator Survey** (waste characterization)	FORM-21-007 Revision: 0 Effective: 10/02/21 Reviewed: 10/02/21

Provide this form to waste generators to determine suitability of a waste stream for digestion and to ensure that the waste is acceptable at this facility per the operating permits.

Green Era Waste Generator Survey

Date _____ **Contact Name** _____

Company Name _____ **Job title** _____

Street Address _____ **Email** _____

City / Zip _____ **Phone** _____

Waste Name _____ **Type** _____

How is this waste identified on a manifest

Pumpable sludge, wash water, cake sludge, stackable solids, vegetable pieces

Major Ingredients _____

List any component products in the waste stream. (i.e. water, chicken fat, chicken skin, bone pieces, meat scraps)

Detergents /Sanitizers / coagulants _____

List any potential CIP chemicals or other cleaning products that may be combined with the waste stream. List any waste water treatment chemicals that are used to recover the waste. If none, write N/A.

Describe the process that produces the waste. _____

Example: Wash water is collected in open gutters throughout the facility and piped to a pretreatment plant. Coarse solids are screened and mechanically removed. Dissolved air flotation is used to separate oils and grease from the wash water prior to further water treatment. The skimmed sludge from the DAF is removed and pumped to a holding tank prior to loading onto tankers for disposal.

How is the waste transported and avg. load size. _____

6,000 gallon closed tanker truck, 5,000 gal vac truck, 25 ton tarped dump trailer, 40-CY roll-off box, 13 CY front loading packer, etc…

How is the waste currently treated? _____

Digester, landfill, direct land application

Non-organic contamination _____

List any sources of non-organic contamination such as plastic film, rigid plastic packaging, rags, gloves, cans, cardboard, rocks, etc…

Sanitary Waste _____

Confirm that at no point this waste stream is comingled with any classified human sanitary waste (restrooms, septage, biosolids, etc)

Odor _____

Describe the odor of the waste product.

Tons or gallons per week _____

Min/max _____

Loads per day _____
On days that you produce waste, how many loads per day would be sent to Green Era?

Storage Age _____
Is the waste stored onsite or loaded into tanks and held for some period before transporting?

Largest Solids _____
Largest expected spherical solid.

Describe any seasonality to waste volume. _____

Days when loads would be delivered? _____
List preferred delivery days. Do you need to haul on Saturday and Sunday?

Temperature when loading _____
Do the loads have the potential to freeze during winter conditions? Are the loads hot?

Slump test / stackability _____
For pumpable wastes, is the waste viscous? If 1 gallon is dumped on the floor does it spread out and flow or remain in a pile like wet concrete? For non-pumpable wastes, does the waste stack in the trailer or does it self-level?

Total Solids _____ **Volatile Solids** _____

pH _____ **COD/BOD** _____

Attach any available representative lab reports with nutrient (NPK) and metals analysis.

Attach photos of the waste.

	Completed By	**Reviewed By (Green Era)**
Signature	_____	_____
Print	_____	_____

Green Era Rules:

1. Only waste products that have been pre-approved from known generators are accepted at this facility.
2. Inflow materials must be non-hazardous and below ceiling limits for As, Cd, Cr, Cu, Pb, Hg, Ni, Se, and Zn in 35 IL Admin Code § 830 Table A.
3. For acceptance, loads must comply with document SOP-21-006, Feedstock Acceptance Guidelines. See posted notice or request an electronic copy from the plant operator.
4. Site hours are 6 AM to 4 PM, Monday through Saturday. Loads may be accepted outside of these hours by appointment only.

Green Era 8D :: Problem Solving Worksheet

Tracking Number: YY:MM:DD-01	Customer Number:	Response Due Date:

8-D is a quality management tool and is a vehicle for a cross-functional team to articulate thoughts and provides scientific determination to details of problems and provide solutions. Organizations can benefit from the 8-D approach by applying it to all areas in the company. The 8-D provides excellent guidelines allowing us to get to the root of a problem and ways to check that the solution actually works. Rather than healing the symptom, the illness is cured, thus, the same problem is unlikely to recur.

Step	0	1	2	3	4	5	6	7	8
Action	The Planning Stage	Establishing the Team	Problem Definition / Statement & Description	Developing Interim Containment Action	Identifying & Verifying Root Cause	Identifying Permanent Corrective Actions (PCA)	Implementing & Validating PCA	Preventing Recurrence	Recognizing Team Efforts

Registered problem and Short Term Corrective Action in place in house.

Long Term Corrective Action developed but not implemented.

Long Term Corrective Action implemented. Monitoring/evaluating effectiveness.

Long Term Corrective Action confirmed effective. Problem closed.

0

The Planning Stage:
The 8-D method of problem solving is appropriate in "cause unknown" situations and is not the right tool if concerns center solely on decision-making or problem prevention. 8-D is especially useful as it results in not just a problem-solving process, but also a standard and a reporting format. Does this problem warrant/require an 8D? If so comment why and proceed.

Is an Emergency Response Action Needed?
(If needed document actions in Action Item Table)

1

Establishing the Team:
Establish a small group of people with the process/ product knowledge, allocated time, authority and skill in the required technical disciplines to solve the problem and implement corrective actions.

Team Goals:

Team Objectives:

Department	Name	Skills	Responsibility

2A

Problem Definition
Provides the starting point for solving the problem or nonconformance issue. Need to have "correct" problem description to identify causes. Need to use terms that are understood by all.

Part Number(s):

Customer(s):

List all of the data and documents that might help you to define the problem more exactly?

Action Plan to collect additional information:

Sketch / Photo of Problem

	Prepare Process Flow Diagram for problem use a separate sheet if needed	

2B	IS	IS NOT
Who	Who is affected by the problem? Who first observed the problem? To whom was the problem reported?	Who is not affected by the problem? Who did not find the problem?
What	What type of problem is it? What has the problem (part id, lot #s, etc)? What is happening with the process & with containment? Do we have physical evidence of the problem?	What does not have the problem? What could be happening but is not? What could be the problem but is not?
Why	Why is this a problem (degraded performance)? Is the process stable?	Why is it not a problem?
Where	Where was the problem observed? Where does the problem occur?	Where could the problem be located but is not? Where else could the problem be located but is not?
When	When was the problem first noticed? When has it been noticed since?	When could the problem have been noticed but was not?
How Much/ Many	Quantity of problem (occurrence rate)? How much is the problem costing in dollars, people, & time?	How many could have the problem but don't? How big could the problem be but is not?
How Often	What is the trend (continuous, random, cyclical)? Has the problem occurred previously?	What could the trend be but is not?

2C	**Problem Description** (based on the information gathered so far, provide a concise problem description)

3	**Developing Interim Containment Actions** Temporary actions to contain the problem and "fix" until permanent correction is in place - document actions in Action Item Table
4A	**Identifying & Verifying Root Cause** Analyze for "Root Cause" of the problem. Identify and verify the Escape Point
4A	Brainstorm the possible causes of the problem
4A	**Cause and Effect Diagram**

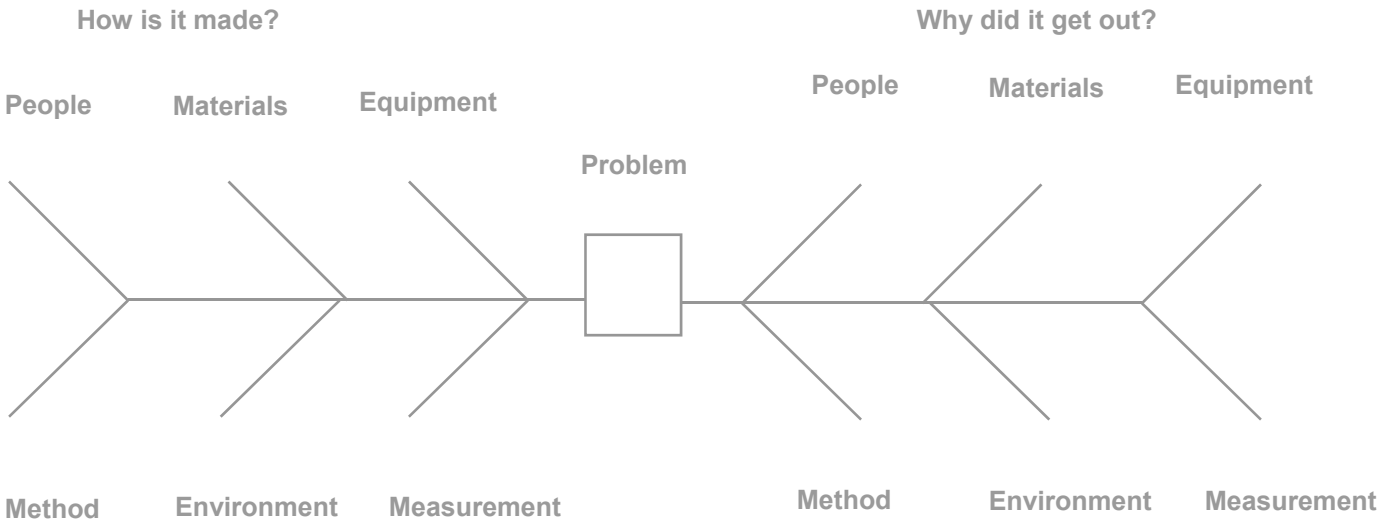

circle the most likely contributors (a maximum of three) from each side.

4B	**5 Why Analysis**

Ask – Why did this happen?

Ask – Why did this happen?

Ask – Why did this happen?

Ask – Why did this happen?

Ask – Why did this happen?

4C	**Action Plan** Based on the team's discussions. Begin to complete the Root Cause Action Plan to verify and validate the root causes and test the escape point. Document this on the Action Item Table

5	**Identify Permanent Corrective Actions** solutions that address and correct the root cause. Solutions determined to be the best of all the alternatives. Document and verify the Permanent Corrective Action (PCA) in the Action Item Table
6	**Implementing & Validating the PCA** Implement and validate to ensure that corrective action does "what it is supposed to do." Detect any undesirable side effects. Document this on the Action Item Table. Return to root cause analysis, if necessary
7	**Preventing Recurrence** determine what improvements in systems and processes would prevent problem from recurring. Ensure that corrective action remains in place and successful
7A	**Address Similar Systems**

Process / Item	Who Responsible	When

7B	Review the following documents / systems

Document	Who Responsible	Completion Date	
		Planned	Actual
Management System Manual			
Manufacturing Work Instructions			
Inspection Work Instructions			
Process Flow Charts			
Process Control Plans			
Design FMEA			
Process FMEA			
Gages			
PPAP			
Engineering Change Approval			

8	**Congratulate Your Team** Use all forms of employee recognition and document as necessary **Celebrate successful conclusion of the problem solving effort** Formally disengage the team and return to normal duties

Was this problem solving exercise effective? Has it been verified with a follow-up?

Yes No	Signature / Title / Date	Findings

Action Item Table

Actions			Implement and Verify Actions						
Action #	Fault / Item	Containment/ Corrective Action	Verify	How Verified	Action	Accountability	Planned	Actual	Status

Registered problem and Short Term Corrective Action in place in house.

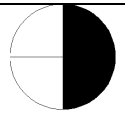
Long Term Corrective Action developed but not implemented.

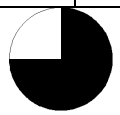
Long Term Corrective Action implemented. Monitoring/evaluating effectiveness.

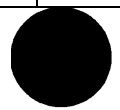
Long Term Corrective Action confirmed effective. Problem closed.

Copy this page and attach as often as necessary

Green Era	Personnel Training Log	LOG-21-001 Revision: 0 Effective: 10/02/21 Reviewed: 10/02/21

The following employees have received the necessary initial training or annual refresher training per 35 IAC 830.210(a-b).

Training topic/description: _____

List Training Documents or attach agenda of covered materials (IE SOP-21-001) _____

Name	Signature	Date of Training	Number of Hours

CERTIFICATION

Name: _____ Signature: _____

Title: _____ Date: _____

All records must be maintained for a minimum of 3-years. Electronic copies are permissible.

Scan after certifying and save to Green Era's cloud storage. Original can be destroyed.

Week No.	Year
14	2022

Green Era

Feedstock Manifest Log

Doc. No. LOG-21-002

Waste density, used in formulas: 8.34 lbs/gal

Date	TRUCKING	GENERATOR	MATERIAL	BIOMASS CATEGORY	Type	IN NET WEIGHT	ARRIVE	LEAVE	TONS	Gallons	Hauler Manifest #	G. Era Manifest #2	Checked	Notes
4/1/2022	ABC Hauling	BIG Foods	vegetable scraps	Food waste	S	45,000	10:05	10:20	22.5	5,396	220401-01	22-01234		sample entry
4/1/2022	FOG Pumping	McDonalds Store #3	Grease Trap	FOG	L	2,085	10:07	10:25	1.0	250	3391	22-01235		sample entry

Week No.	Year
19	2022

Green Era

Cake Manifest Log

Doc. No. LOG-21-003

Date	TRUCKING	DELIVERED TO	MATERIAL	Avg. Total Solids (%)	OUT NET WEIGHT	LEAVE	ARRIVE	WET TONS	TONS (CALC)	G. Era Manifest #	Checked	Notes
5/1/2022	Peter's Trucking	Urban Growers #5	cake solids	22.5%	46,111	5:30	6:26	23.06	5.2	CAKE-22-011		sample entry
5/1/2022	Peter's Trucking	Urban Growers #2	cake solids	22.5%	45,900	13:10	13:58	22.95	5.2	CAKE-22-012		sample entry

Week No.	Year
21	2022

Green Era

Waste Manifest Log

Doc. No. LOG-21-004

Date	TRUCKING	DELIVERED TO	MATERIAL	OUT NET WEIGHT	LEAVE	ARRIVE	WET TONS	G. Era Manifest #	Checked	Notes
5/15/2022	South Container	Landfill X	waste packaging	19,111	5:30	6:26	9.56	MSW-22-008		sample entry
5/15/2022	South Container	Landfill X	waste packaging	18,090	13:10	13:58	9.05	MSW-22-009		sample entry

Green Era

Odor Complaint Log

Doc. No. LOG-21-005

No.	Log Date	Odor Date	Instensity	Expected Source (name emission point and emission type)	Abnormal Operating Conditions	Distance from plant	Notifed by

Green Era

Unauthorized Waste Log

Doc. No. LOG-21-006

Incoming Manifest No.	Date Received	Date detected	Date Removed for Disposal	Days stored onsite	Generator/Source	Hauler/Trucking	Waste Description	Waste Type/Classification	Mass (lbs)	Volume (note units)	Disposal company	Outbound Waste Manifest	Receiving Facility	Notes

Green Era

Air Emissions Methane Venting Log

Doc. No. LOG-21-007

										Weather						
Venting From (TAG NO)	**Venting From (description)**	**Beginning Date/Time**	**Ending Date/Time**	**Duration (HH:MM:SS)**	**H2S Reading (PPMv)**	**Date/Time of H2S sample**	**CH4 Reading**	**Date/Time of CH4 sample**	**Prevailing Wind Dir.**	**Wind Speed**	**Temperature**	**Precip.**	**Odor Complaints**	**Reason for event**	**Notes**
T-105, PSV-105B	Groth pressure relief vent on the digester	10/1/21 14:25	10/1/21 14:38	0:13:00	420	10/1/2021 6:00	62.5%	10/1/2021 14:00	273°	10 to 25	67°	Heavy Rain/Thunderstorm	No	Mains Power loss	Example Entry: Main breaker trip due to external voltage spike. Reset breaker and reconnected to Grid. lightning in the area. Voltage shunts in main cabinet show that they are still okay.
T-105, PSV-105B	Groth pressure relief vent on the digester	10/1/21 14:45	10/1/21 15:05	0:20:00	420	10/1/2021 6:00	62.5%	10/1/2021 14:00	273°	10 to 15	67°	Light Rain	No	Flare faulted.	Example Entry: CC fuse was blown on mains at I/O cabinet. Replaced fuse.

Green Era

Air Emissions Control Equipment Maintenance (downtime) Log

Doc. No. LOG-21-008

Equipment (TAG NO)	Equipment Name (description)	Beginning Date/Time	Ending Date/Time	Duration (HH:MM:SS)	Prevailing Wind Dir.	Wind Speed	Temperature	Weather Precip.	Odor Complaints	Reason for event	Notes
W-038	Carbon bed booster blower, main building exhaust	10/1/21 19:25	10/1/21 20:38	1:13:00	273°	10 to 25	58°	None. Clear skies	No	Inspect blower belts. Replaced 4 belts and retensioned.	Example Entry: Building exhaust fans were shutdown during this maintenance period.
S-036	Outdoor Ionizer Bank	10/21/21 11:03	10/21/21 14:25	3:22:00	280°	3 to 5	52°	light rain	No	Control network to ionizers was interrupted	Example Entry: Fault showed on SCADA that the control panel lost communication. Network switch port was found to have failed. Moved network cable to working port.

Green Era	**Standard Operating Procedure** **Spill Contingency Plan**	SOP-21-001 Revision: 1 Effective: 10/25/21 Reviewed: 10/25/21

1 Purpose

This SOP establishes consistent methods for responding to spill, mitigating the impact, clean-up, recordkeeping, and notification.

2 Scope

This SOP applies to facility operations at the Green Era digester facility and affiliated contract operations for product transportation on public or private roadways and/or composting operations.

3 Definitions and Acronyms

3.1 Cake Solids

The semi-solid organic fiber separated from the stabilized anaerobic digestate during the dewatering process. This material still contains between 70% and 80% water, but is stackable. Cake solids can contain pathogens. The cake solids can contain a significant amount of plant available nitrogen and phosphorus, similar to animal manure.

3.2 Carbon Dioxide

Odorless, colorless gas that is non-combustible. Carbon dioxide is produced by bacteria during anaerobic digestion and may be released from feedstock or digestate during a spill event. In confined spaces, carbon dioxide can displace oxygen and represents a suffocation hazard.

3.3 Digestate

Digestate is the resultant liquor after the process of anaerobic digestion has treated the feedstock. For this facility, digestate is always pumpable. Digestate can contain pathogens. The pH of the digestate is normally slightly alkaline and can range from 7.2 pH to 8.5 pH. Digestate may produce hazardous gasses including methane, carbon dioxide, and hydrogen sulfide. The digestate contains a significant amount of plant available nitrogen and phosphorus, similar to liquid animal manures.

3.4 Feedstock

Any solid or pumpable untreated organic waste that is received by the facility for treatment by anaerobic digestion, whereby volatile solids will be reduced and pathogens will be reduced. Feedstock can contain pathogens. The pH of feedstock varies depending on the source organic material. It is often acidic, especially after holding in a tank. The pH of hydrolyzed feedstock within the feedstock tank can vary from 3 to 5 SU. Feedstock may produce hazardous gasses including methane, carbon dioxide, and hydrogen sulfide.

3.5 4 gas meter

A portable safety device that is used to detect the presence of combustible gasses, low oxygen levels, and hydrogen sulfide. Fire departments will have these meters on the truck. Green Era keeps these meters at the plant.

3.6 Hydrogen Sulfide

Colorless gas that has a pungent smell similar to rotten eggs, natural gas odorants, or a skunk. Hydrogen sulfide can be smelled at levels lower than 1 part per million. Hydrogen sulfide can accumulated in confined spaces and is toxic. 10 PPMV is the OSHA permissible exposure limit over an 8-hour time weighted average. A personal respirator should be worn when H2S is detected above 5 PPMV by a 4-gas meter.

3.7 Methane

Odorless, colorless gas that is combustible and can be an explosive hazard in the presence of oxygen. Methane is produced by bacteria during anaerobic digestion and may be released from digestate during a spill event.

3.8 Plant Operator

Onsite personnel who have the designated responsibility to operate and maintain the facility on behalf of Green Era.

3.9 Acronyms

SOP – Standard Operating Procedure
PPE – personal protective equipment

4 Procedure in the event of a spill

4.1 Evacuate the area to protect yourself and others

First move to a safe location to assess the spill. Be aware of gasses that may be released from the spill. Move to a well ventilated area if inside, or upwind, if outdoors. Gather and use PPE equipment as needed before reentering the spill affected area. PPE equipment will depend on the hazard, but is likely to include gloves, boots, respirator, and a 4-gas meter.

4.2 Get help and Notify

Notify others nearby first to alert them to the spill and have them visually monitor the activity from a safe location. Do not reenter the spill affected area without having one or more persons onsite who would be able to help if you have an accident containing the spill. Contact the plant operations manager if not already notified. If the spill, of 25 gallons or more, occurred on a public site, call the IEPA Spill Hotline at 1-800-282-9378.

4.3 IEMA Spill Notification 1-800-782-7860 (25 gallons or more that isn't contained on Green Era's property)

If contacting the Illinois Emergency Management Agency, plan to provide the following information.

4.3.1 Responsible Party – name of carrier

4.3.2 Date/time of the spill

4.3.3 Location (address, cross-street, or mile marker) use phone to determine location if needed.

4.3.4 Materials (cake solids, digestate, or feedstock product) If the result of a traffic accident, check for diesel or fuel leakage.

4.3.5 Quantity (estimated spilled and the total potential amount – size of tank)

4.3.6 Hazards (pathogens, H2S) and advise for any first responders

4.3.7 Affected media/area (air, land or waterway, including threats to ditches, storm sewers, and streams).

4.3.8 Actions/notifications (evacuations, containment, contractor hired for cleanup)

4.3.9 Contacts on the scene (responder cell phone, responsible party, contractor, facility point of contact)

4.3.10 Other useful info. (Truck DOT number etc).

4.4 Stop the source of the spill

If possible, stop further material from being spilled and/or take steps to reduce the flow of material from the containment.

4.4.1 Close valves

If a pipe has broken, and an upstream valve is accessible, close the valve.

4.4.2 Stop pumping

For tank overflows, stop pumping into the tank and begin to transfer out of the tank to other tanks with available storage volume, if possible.

4.5 Contain the spill

Build berms with available material to contain spill and direct fluid away from storm water drains, swales, ditches or any waters of the state. Bermed dirt and sand bags can be effective in diverting flow. A dug hole can help to pump up material with a vac truck. Fine

shredded bark mulch and/or saw dust can be effective in absorbing small amounts of spilled liquid so it can be handled as a solid. Straw bales can be used to dike ditches if staked.

Small volumes of spilled cake solids can be shoveled into a truck or other bin. Larger volumes can be cleaned up with a loader. If cake sludge was spilled on a public roadway, the area should be swept broom clean. After sweeping, if residual remains on the roadway that would make the surface slippery, the material should be rinsed off with water.

Fuels or oils should be absorbed with oil dry and/or absorbent mats that are kept in the facility's spill kit.

4.6 Document the extent of the spill

Use a cell phone or digital camera to take photos and/or video of the spill source, affected area and containment. Use voice memos or take notes for further incident documentation and reporting. Note the time the spill occurred and the time when the spill was contained.

4.7 Clean up

4.7.1 Large volume spills, greater than 25 gallons

Have a vacuum truck service assist with clean-up of large quantities of spilled liquids. Dig holes to create a sump areas for the vac truck to use. Direct spilled fluids/sludges to the holes.

4.7.2 Spills on impervious (paved) surfaces

Use rubber squeegees, brooms and flat scoop shovels, to remove bulk material from paved areas and roadways. Push to an area where bulk material can be contained and removed.

4.7.3 Public Roadways

Set up cones and have someone direct traffic away from the spill as necessary. Notify the local authority of this activity, sheriff, State Highway Patrol, or local police dept.

After removing bulk sludge from a roadway, flush the roadway with fresh water after a spill to clean. The size of the spill on a public roadway and length of affected area will determine the type of equipment used to irrigate the road. A pressure washer service or vac truck with water on board may be used effectively depending on the spill type. If there is a major public safety issue or the spill occurred on a busy highway, the local authority may have the fire dept respond to assist. Roadways should be cleaned to the satisfaction of the local authority.

4.8 Document the clean-up

Use a cell phone or digital camera to take photos and/or video of the cleaned area. Use voice memos or take notes for further incident documentation and reporting of the clean-up methods used. Be sure to note who responded to the spill, who assisted with clean-up, and equipment that was used. Note the time when the clean-up started and when it was completed.

4.9 Additional Internal Notification

Plant manager should be informed of the spill and s/he should inform the operations manager and the asset manager.

4.10 Regulatory Notification

If the spill was more than 25 gallons and occurred offsite, the spill should be reported the Illinois EPA 217-782-3637 and a spill report should be filed with their office. Initial notification should occur within 24 hours of the incident with report to follow within 5 days.

Contact the MWRD 312-751-5600 if any slug discharge or potential slug discharge will occur as a result of the spill or clean-up. The storm water and sanitary sewers are a combined system at the Green Era plant and they are treated by the Stickney Water Reclamation Plant. [RV1]

4.11 Record retention

Spill reports and incident records should be retained for the life of the facility.

5 References

5.1 MP-06 Green Era Emergency Response Plan

Green Era	**Standard Operating Procedure** **Sewer Spill Prevention and Reporting**	SOP-21-002 Revision: 2 Effective: 11/12/21 Reviewed: 11/12/21

1 Purpose

This SOP establishes consistent methods for preventing unintended discharges to the Chicago sewer and for responding to a spill that has entered the combined sanitary and stormwater sewer system through a floor drain, manhole, or pipe and may impact the receiving Chicago wastewater treatment facility.

2 Scope

This SOP applies to facility operations at the Green Era plant.

3 Definitions and Acronyms

3.1 Carbon Dioxide

Odorless, colorless gas that is non-combustible. Carbon dioxide is produced by bacteria during anaerobic digestion and may be released from feedstock or digestate during a spill event. In confined spaces, carbon dioxide can displace oxygen and represents a suffocation hazard.

3.2 Detention Pond

The earthen stormwater holding pond on the southeast corner of the Green Era site that collects storm water from all on-site stormwater gathering pipes. Retained stormwater will overflow to the City sewer after reaching an invert elevation of 9-feet and will discharge through an 8-inch pipe from the catch basin located in the southeast corner of the property.

3.3 Digestate

Digestate is the resultant liquor after the process of anaerobic digestion has treated the feedstock. For this facility, digestate is always pumpable. Digestate can contain pathogens. The pH of the digestate is normally slightly alkaline and can range from 7.2 pH to 8.5 pH. Digestate may produce hazardous gasses including methane, carbon dioxide, and hydrogen sulfide.

3.4 Fats, Oils, and Grease

Fats, Oils, and Grease (FOG) is a classification of feedstock that is received at Green Era. FOG is collected from grease traps by vacuum trucks from food service establishments. FOG is a mixture of water and lower density fats, oils, and grease that have a lower density than the water and float on top of the water. This waste may also include food solids.

3.5 Feedstock

Any solid or pumpable untreated organic waste that is received by the facility for treatment by anaerobic digestion, whereby volatile solids will be reduced and pathogens will be

reduced. Feedstock can contain pathogens. The pH of feedstock varies depending on the source organic material. It is often acidic, especially after holding in a tank. The pH of hydrolyzed feedstock within the feedstock tank can vary from 3 to 5 SU. Feedstock may produce hazardous gasses including methane, carbon dioxide, and hydrogen sulfide.

3.6 Filtrate

The remaining water after solids are separated from the digestate during the dewatering process on the belt press. Filtrate will be discharged to the sanitary sewer.

3.7 4 gas meter

A portable safety device that is used to detect the presence of combustible gasses, low oxygen levels, and hydrogen sulfide. Fire departments will have these meters on the truck. Green Era keeps these meters at the plant.

3.8 Hydrogen Sulfide

Colorless gas that has a pungent smell similar to rotten eggs, natural gas odorants, or a skunk. Hydrogen sulfide can be smelled at levels lower than 1 part per million. Hydrogen sulfide can accumulated in confined spaces and is toxic. 10 PPMV is the OSHA permissible exposure limit over an 8-hour time weighted average. A personal respirator should be worn when H2S is detected above 5 PPMV by a 4-gas meter.

3.9 Methane

Odorless, colorless gas that is combustible and can be an explosive hazard in the presence of oxygen. Methane is produced by bacteria during anaerobic digestion and may be released from digestate during a spill event.

3.10 Plant Operator

Onsite personnel who have the designated responsibility to operate and maintain the facility on behalf of Green Era.

3.11 Sewer, or Sanitary Sewer

The pipe system that carries wastewater and stormwater to a Chicago wastewater treatment facility. The Green Era facility is connected to a sewer main pipe that carries the waste to the Stickney Water Reclamation Facility.

3.12 Slug Discharge

Any discharge to the sewer system of a non-routine, episodic nature, including but not limited to an accidental spill or a non-customary batch discharge. Definition in accordance with 40 CFR 403.8(F)(2) (VI).

3.13 Storm water

Rainwater that is collected from impervious surfaces (pavement, buildings) and directed to common discharge pipes that discharge it to surface waters of the State (creeks, streams, rivers) or to a combined sanitary and stormwater sewer pipe.

3.14 Acronyms

COD – Chemical Oxygen Demand
FOG – fats, oils, and grease
PPE – personal protective equipment
SOP – Standard Operating Procedure
TS – Total Solids
WWTP – waste water treatment plant

4 Normal Discharge Practices to the City Sewer

4.1 Process Building

The process building is connected to the sanitary sewer. The 8-inch sewer pipe exits the south side of the building. It continues south towards W. 83rd Street. The final sanitary manhole on the property is located just east of the entrance driveway from W. 83rd Street within 10-feet of the fence.

The building restrooms, sinks, shower, and boiler room floor drains are all connected with the sanitary sewer. Trench drains on the main level receiving floor, dewatering area, and lower level are connected to the process sumps and liquid receiving tanks for treatment in through the anaerobic digester.

No concentrated chemicals shall be dumped, disposed of, or discharged to the sinks or floor drains.

All digestate and process wastewater resulting from the treatment of organic waste shall be stored in closed tanks. Wastewater will be discharged to the sanitary district under an approved Discharge Authorization.

4.1.1 Dewatered Filtrate / Process Wastewater

Filtrate from the dewatering operation (belt press) will drain to two below slab receiving tanks. The filtrate will be pumped from these tanks through a force main to the sanitary discharge pipe. An electromagnetic flowmeter will be installed in the filtrate force main and discharge volume will be recorded on the plant SCADA. The filtrate will also be composite sampled for nutrient analysis. The facility combined discharge (i.e., process wastewater plus sanitary

wastewater) will be sampled semi-annually per MWRD requirements for compliance certification and invoicing.

4.2 Yard overflow tank

The yard process tanks (biomass tank and digester) have dedicated overflow pipes at the maximum tank operating levels below the roof. The overflow pipes are routed down the outside of the tanks and are piped to a concrete transfer tank in the yard. The transfer tank has redundant sump pumps to transfer any overflowed sludge or foam to the feedstock receiving pits in the process building so it can be treated again in the AD system. There are multiple controls in place to prevent tank overflow conditions from occurring. The highest risk for a tank overflow condition is in the feedstock tank if the blend of feedstocks produces a lot of gas and foaming occurs whereby the density of the feedstock in the tank is reduced due to the entrained gas and would provide a false level reading from the pressure sensor at the base of the tank used to determine tank level. A secondary level sensor is also installed at the top of the tank that uses radar to directly detect the distance to the liquid level. The level readings from both sensors is continually monitored by the SCADA and will notify operations staff if foam conditions are detected so steps can be taken to ensure an overflow event does not occur.

4.3 Condensate trap

The gas condensate trap that collected hydrogen sulfide laden water from the biogas piping is pumped to the liquids receiving tank at the head of the plant. The condensate trap manhole is located northwest of the flare and thermal oxidizer.

5 Storm water

5.1 Collection System

All stormwater catch basins and stormwater culverts on the site discharge to the detention pond on the southeast corner of the property. Retained stormwater will overflow to the City sewer after reaching an invert elevation of 9-feet and will discharge through an 8-inch pipe from the catch basin located in the southeast corner of the property.

5.2 Parking area catch basins

Catch basins in the parking area are connected with the storm water drains. This flow does not directly enter the waters of the State. It is collected in the detention pond and then overflows to the combined sanitary and stormwater sewer.

5.3 Tank Yard

The catch basins in the tank yard are connected to the stormwater system. In event of a spill in the tank yard, this catch basins in the yard should be plugged and/or covered to prevent discharge of any runoff to the detention pond.

6 Stored Chemicals

6.1 Bulk quantities in excess of 5 gallons

Chemical	Where Used	Quantity Stored	Storage Container
Virgin Motor Oil, hydraulic oils, gearbox oils	Stationary Engine / Generator, Gas compressors.	Less than 600 gallons	55 gallon steel drums or 275 gallon totes
Used Oils	Stationary Engine / Generator, Gas compressors.	Less than 300 gallons	55 gallon steel drums or 275 gallon totes
Virgin Ethylene Glycol	Stationary Engine / Process heating (boiler) as heat transfer fluid	Less than 300 gallons	55 gallon steel drums or 275 gallon totes. Also in plastic tank system feeders, qty 2 in building.
Diluted Ethylene Glycol	Stationary Engine / Process heating (boiler) as heat transfer fluid	Less than 300 gallons.	Drained glycol from process heating system during maintenance.

6.2 Non-bulk Chemicals

An inventory listing of all fuels, lubricants, paints, cleaning products and other chemicals used for the maintenance and upkeep of the facility shall maintained. Chemicals used for laboratory testing should also be listed. See facility chemical inventory list (maintained at plant) with SDS sheets.

7 Procedures in event of a Spill or SLUG discharge to the sewer

7.1 For a spill, evacuate the area to protect yourself and others

First move to a safe location to assess the spill. Be aware of gasses that may be released from the spill. Move to a well ventilated area if inside. Gather and use PPE equipment as needed before reentering the spill affected area. PPE equipment will depend on the hazard, but is likely to include gloves, boots, respirator, and a 4-gas meter.

7.2 Get help and Notify

Notify others nearby first to alert them to the spill and have them visually monitor the activity from a safe location. Do not reenter the spill affected area without having one or more persons onsite who would be able to help if you have an accident containing the spill. Contact the plant operations manager if not already notified.

7.3 MWRD Immediate Notification

During normal business hours, contact the MWRD R&D Dept., Industrial Waste Division to report the discharge.

MWRD Industrial Waste Div. (312) 751-3044 – follow the representative's instructions, if no one is directly reached, leave a message and call the number below for the Systems Dispatcher available 24/7.

Systems Dispatcher: 312-787-3575, staffed 24/7

Be prepared to provide the following information

7.3.1 Your name and cell phone number where you can be reached.

7.3.2 Service address: 650 West 83rd

7.3.3 Company name: Green Era

7.3.4 Federal Tax ID: 81-3934327

7.3.5 Date/time of the spill

7.3.6 Materials (digestate, feedstock product, or chemical)

7.3.7 Specify the approximate TS and COD if the material is digestate or feedstock.

7.3.8 Quantity (estimated spilled and the total potential amount – size of tank or line where you expect the leak to be originating from)

7.3.9 Hazards (pathogens, H2S)

7.3.10 Entry point – let them know where the material is entering the sewer, manhole, stormwater overflow, etc…

7.3.11 Actions/notifications (evacuations, containment, contractor hired for cleanup)

7.3.12 Contacts on the scene (responder cell phone, responsible party, contractor, facility point of contact)

7.3.13 Record the representative's contact information and the time the call was made.

7.4 Stop the source of the spill

If possible, stop further material from being spilled and/or take steps to reduce the flow of material from the containment.

7.4.1 Close valves

If a pipe has broken, and an upstream valve is accessible, close the valve.

7.4.2 Stop pumping

For tank overflows, stop pumping into the tank and begin to transfer out of the tank to other tanks with available storage volume, if possible.

7.5 Contain the spill

Build berms with available material to contain spill and direct fluid away from sewer drains and or stormwater catch basins. Bermed dirt and sand bags can be effective in diverting flow. If outdoors and entering through a manhole, a dug hole can help to pump up material with a vac truck. Fine shredded bark mulch and/or saw dust can be effective in absorbing small amounts of spilled liquid so it can be handled as a solid. Straw bales can be used to dike ditches if staked.

7.6 Document the extent of the spill

Use a cell phone or digital camera to take photos and/or video of the spill source, affected area and containment. Use voice memos or take notes for further incident documentation and reporting. Note the time the spill occurred and the time when the spill was contained.

7.7 Clean up

7.7.1 Large volume spills, greater than 25 gallons

Have a vacuum truck service assist with clean-up of large quantities of spilled liquids. Dig holes to create a sump areas for the vac truck to use. Direct spilled fluids/sludges to the holes.

7.7.2 Spills on impervious (paved) surfaces

Use rubber squeegees, brooms and flat scoop shovels, to remove bulk material from paved areas and roadways. Push to an area where bulk material can be contained and removed.

7.8 Document the clean-up

Use a cell phone camera or other digital camera to take photos and/or video of the cleaned area. Use voice memos or take notes for further incident documentation and reporting of the clean-up methods used. Be sure to note who responded to the spill, who assisted with clean-up, and equipment that was used, and which agencies were notified with their contacts. Note the time when the clean-up started and when it was completed.

7.9 Additional Internal Notification

Plant manager should be informed of the spill and s/he should inform the operations manager and the asset manager.

7.10 Further Regulatory Notification

A written follow-up report shall be submitted to MWRD within five (5) calendar days of the incident. **The current form is RD-116, revised July 1998.**

https://mwrd.org/sites/default/files/documents/RD-116.pdf

The report shall contain the following:

1. A description of the discharge, the cause of the upset, and the upsets impact upon the user's compliance status.

2. The period of non-compliance, including the exact dates and times of noncompliance, and if the noncompliance continues, the time by which the non-compliance is expected to be corrected.

3. Any and all steps taken, or to be taken, to reduce, eliminate, and prevent recurrence of the non-compliance.

Submit this written report to:

MWRD
Industrial Waste Division
Enforcement Section
111 East Erie Street
Chicago, Illinois 606111
E-Mail: mwrd-ucts@mwrd.org

7.11 Record retention

Spill reports and incident records should be retained for the life of the facility.

8 Training and Spill Prevention

8.1 Training

8.1.1 New employees shall be trained on the content of this SOP no later than 30 days after their first day of employment.

8.1.2 Current staff shall review this plan every 24 months along with the Spill Contingency Plan.

8.2 Prevention

8.2.1 Regular preventative maintenance and visual inspection of pumps and piping systems that convey process wastewater in the facility.

8.2.2 Store chemicals with secondary containment or keep in areas where containers are protected from damage from forklifts or other traffic.

8.2.3 Only store chemicals in containers approved for the use.

8.2.4 Minimize the volume of chemicals stored onsite.

9 Detection

9.1 Camera system and staffing

9.1.1 Maintain camera system that can remotely monitor areas of the plant for spills.

9.1.2 Walk at the beginning and end of staffed shifts to visually inspect all assets.

9.2 Automatic monitoring and alarms

SCADA/PLC system shall monitor tank levels for unexpected changes. Unexpected level drops will interlock all pumping processes to that tank and close all automatic valves to isolate piping sections. An alarm will notify the responsible party through SMS text messaging or email.

10 References

10.1 Emergency Management Plan

10.2 SOP-21-001 Spill Contingency Plan

10.3 Green Era Stored Chemical List - site log

10.4 Record drawings, stored onsite, Site Utility Plan (C-4), Building Plumbing Plans

Green Era	**Standard Operating Procedure** **Lockout / Tagout**	SOP-21-003 Revision: 0 Effective: 07/21/21 Reviewed: 07/21/21

1 Purpose

This safety procedure has been established to instruct employees on the proper steps and methods to Lockout/Tagout/Blockout mobile or stationary equipment, in-shop machinery, and energy systems in order to prevent serious or fatal injuries to any workers as well as to prevent property damage and loss.

2 Scope

This SOP applies to digester facility operations at Green Era.

3 Definitions and Acronyms

3.1 Energy Systems

a. Electrical systems that consist of the wires, conduit, switches and breakers all used to energize a machine. Machines or electrical equipment with "stored energy" such as capacitors must also be considered and included. Stored energy, if accidentally released, could cause injury to personnel working on or near the involved equipment.

b. Pressurized fluids, either liquid or gas systems includes piping, valves, pumps and gauges that would release pressure if opened or damaged. This includes hydraulic, compressed air, pressurized water, biogas piping, and sludge lines.

c. Combustible fluids including fuels and chemicals that could potentially be ignited and release energy with a provided ignition source

d. Mechanical systems with stored potential energy. Including elevated loads that could fall, compressed springs, etc…

3.2 Lockout / Tagout / Blockout

Lockout/ Tagout/ Blockout: a method to isolate and render power sources inoperative, this includes any suspended parts of heavy equipment or machinery that may have inadvertent movement (Blockout).

3.3 Lockout Tag

A notice that informs the reader why the machinery is locked out, the name of the employee who locked out the device, date and time the machine was locked out.

3.4 Lockout Scissor Clamp

A lockout device that can be inserted thru the hole of a lockable disconnect switch to prevent operation of the switch. The clamp also has holes that will align when the clamp is closed and allow the use of multiple employee padlocks to prevent unauthorized removal.

3.5 Plant Operator

Onsite personnel who have the designated responsibility to operate and maintain the facility on behalf of Green Era.

3.6 Acronyms

PPE – personal protective equipment
SCADA – Supervisory Control and Data Acquisition (plant control system)
SOP – Standard Operating Procedure

4 General Information

4.1 Training

The Managers and Supervisors are responsible for assuring that employees are properly trained for the work assigned and that they adhere to the measures specified in this Safety Procedure.

4.2 Equipment and Supplies

Lockout/Tagout supplies that are available at Green Era include the following:

1. Single pole circuit breaker lockout (2)
2. Double pole circuit breaker lockout (1)
3. Electric plug lockout (1)
4. Lockout Tags (25)
5. Large “Do Not Start” cloth bag cover (1)
6. Small “Do Not Start” cloth bag cover (1)
7. Small metal padlocks
8. Folding lockout scissor clamp

4.3 Lockout tag information and notices

The Lockout Tag must be filled out with the following information:

a. Reason for Lockout

b. Name of the person who is working on the heavy construction equipment or in-shop machinery or hand tools, and/or energy system

c. Date and time the tag was put in place

4.4 Prohibition against removal of lockout tag

All employees must have their own padlock limited to one key only. When more than one person is involved in the lockout procedure, the folding lockout scissor clamp is used. This clamp allows for several padlocks to be used. Each employee that worked on a piece of equipment shall remove his/her own lock.

Do not attempt to operate any switch, valve or other energy isolating device bearing a lock. No one is to remove any Lockout Device that was placed there by another person.

5 Procedures

5.1 Mobile Equipment

5.1.1 Locking Out Mobile Equipment

1. Identify the equipment to be put out of service.
2. Evaluate what work needs to be performed and assess what precautions are needed to prevent injury or property loss.
3. Park heavy construction equipment in the shop or on a level area.
4. Lower equipment blade or bucket to the floor or ground.
5. Chock the wheels on rubber-tired equipment.
6. Blockout any parts of the equipment that may lower itself due to gravity, or may roll or slide.
7. Check for personnel in the area of the heavy construction equipment to be locked-out.
8. Notify all affected personnel that servicing or maintenance is required on the equipment and that the equipment will be shut down and locked-out to perform the servicing or maintenance.
9. If the work area presents hazards to other personnel, “CAUTION” tape and/or safety cones must be used to isolate the work area to prevent unauthorized personnel from entering.
10. Turn “Master Switch” to “off” position.

11. Remove positive battery cable from positive terminal on all batteries.
12. Verify the equipment will not start by turning the key in the ignition switch to the “Start” position.
13. Fill out a Lockout Tag.
14. Remove key from ignition switch and install Lockout Tag on ignition switch.
15. Install “Do Not Start” heavy cloth bag over the steering wheel or the hydraulic activation control lever.
16. The heavy construction equipment piece is now locked out.

5.1.2 Restoring Mobile Equipment to Normal Production Operations

1. After servicing, repair or maintenance is complete, connect the positive battery cables to the positive terminal on the batteries.
2. Remove all tools from the area.
3. Check the area around the equipment to ensure no one is exposed.
4. Notify all affected employees that the lock out is completed.
5. Remove the chocks from the wheels.
6. Remove all blocking from suspended parts.
7. Remove all Lockout/ Tagout devices including the heavy cloth “Do Not Start” bags.
8. Engage the heavy equipment to normal production operation.
9. Complete a service report that documents the work that was performed.

5.2 Stationary Equipment

5.2.1 Locking Out Stationary Equipment

1. Identify the machine to be put out of service.
2. Evaluate what work needs to be performed and assess what precautions are necessary to prevent injury or property loss.
3. Check for personnel in the area of the machine.
4. Notify all affected employees that servicing or maintenance is required on the machine or tool and the machine and/or tool will be shut down and locked out to perform the servicing or maintenance.

5. If the work area presents hazards to other personnel, “CAUTION” tape and/or safety cones must be used to isolate the work area to prevent unauthorized personnel from entering.
6. Check to make sure no one is operating the machine from the local control panel or remotely from the Plant SCADA.
7. Identify any automated routines controlled by the Plant SCADA that may be affected by this device being out of service.
8. Disable control of the device from the Plant SCADA when applicable. Notify all users.
9. Identify the power source.
10. De-energize the machine by switching the “on/off” switch to off, install lockout device.
11. Fill out the Lockout Tag and attach to the locking device on the “on/off” switch.
12. In the electric circuit breaker panel, switch the breaker to the “off” position.
13. Install circuit breaker lockout device.
14. Install and lock small padlock on circuit breaker lockout device.
15. Fill out the Lockout tag and attach to padlock.
16. If a portable electric hand tool must be locked out, remove the wire chord from the electric wall socket, install the electric plug lockout and lock this with the padlock.
17. Fill out the Lockout tag and attach to padlock.
18. Verify the in-shop machine or portable electric hand tool is de-energized by attempting to engage machine through normal start-up procedures. A voltmeter may be used to verify no electrical energy.
19. Return operating control(s) to “neutral” or “off” position.
20. Any mechanism under load or pressure, such as springs, must be released and blocked.
21. The machine or hand tool is now locked out.

5.2.2 Restoring Stationary Machinery to Normal Operation:

1. After servicing, repair or maintenance is complete, verify all operating controls are in the “neutral” or “off” position.
2. Remove all tools from area.

3. Check the area to make sure all persons are clear from hazards which might result from the machine or tool being energized.
4. Notify all affected employees that the Lockout is completed.
5. Remove padlocks, lockout devices and tags.
6. Energize machine and test for function.
7. Restore automatic functions on the Plant SCADA when applicable.
8. Complete a service report that documents the work that was performed.

5.3 Energy Systems

5.3.1 Locking out Energy Systems

1. Identify the system to be put out of service.
2. Evaluate what work needs to be performed and access what precautions are necessary to prevent injury and property loss.
3. Determined if you are qualified to put the system out of service. Some systems may require a licensed electrician, plumber or boiler-maker to do the work. Check with your supervisor first.
4. Check for personnel in the area of the system.
5. Notify all affected employees that servicing or maintenance is required on the system and the system will be shut down for servicing or maintenance.
6. If the work area presents hazards to other personnel, “CAUTION” tape and/or safety cones must be used to isolate the work area to prevent unauthorized personnel from entering.
7. Check to make sure no one is operating the system from the local control panel or from the Plant SCADA.
8. Identify any automated routines controlled by the Plant SCADA that may be affected by this device being out of service.
9. Disable control of the device from the Plant SCADA when applicable. Notify all users.
10. Inspect the equipment to make sure all parts have stopped moving.
11. Shut off the energy system by closing the valve that supplies the system.
12. Tagout the valve.

13. Depressurize by relieving trapped pressure in airlines, hydraulic lines, other piping. Be aware that a liquid or gas under high pressure can penetrate your skin resulting in serious injury. A pressure gauge may be used to determine "zero" pressure.
14. Be aware of the flammability of the liquid or gas being released from the system. Nitrogen gas may be used to purge a pipeline that contains flammable gas. Vent to a safe area.
15. Use appropriate container to collect any drained material.
16. Release the tension on springs or block open spring driven parts or jammed parts.

5.3.2 Restoring Energy System to Normal Operation

1. After servicing, repair or maintenance is complete, verify the system has been restored to a "safe" condition.
2. Verify all controls are in a "neutral" or "off" position.
3. Remove all tools from area.
4. Check the area to make sure all persons are clear from hazards that might result from the system being activated.
5. Notify all affected employees that the Lockout is complete.
6. Remove padlocks, lockout devices and tags.
7. Slowly open valve to charge system for normal productive operation.
8. Restore automatic functions on the Plant SCADA when applicable.
9. Complete a service report that documents the work that was performed

6 References

6.1 Green Era Health and Safety Manual

Green Era	**Standard Operating Procedure** **Confined Space Entry**	SOP-21-004 Revision: 1 Effective: 10/02/21 Reviewed: 10/02/21

1 Purpose

This procedure outlines the minimum work procedures for entering confined or permit spaces. The Occupational Safety Health Administration (OSHA) final ruling 29 CFR 1910.146 was used as a basis for development of this procedure. This procedure provides guidance for Green Era employees to assess confined spaces and take appropriate measures for the protection of any person assigned to enter a confined space.

2 Scope

This SOP applies to digester facility operations at the Green Era plant. The procedure does not apply to outside construction contractors. Contractors who perform work at the Green Era facility shall have written safety procedures including procedures for confined space entry. Green Era personnel should review and approve these procedures prior to allowing confined space work.

3 Definitions and Acronyms

3.1 Attendant

An individual stationed outside the confined space who monitors the authorized entrant.

3.2 Authorized Entrant

A trained individual who is authorized by Green Era to enter a confined space.

3.3 Confined Space

An enclosed space which (1) is large enough and so configured that an employee can enter and perform assigned work; (2) has limited or restricted means for exit (for example, tanks, vessels, silos, storage, bins, hoppers, vaults and pits are spaces that may have limited means of exit or entry); and (3) is not designed for continuous employee occupancy.

OSHA uses the term “permit-required confined space” (permit space) to describe those spaces which both meet the definition of “confined space” and pose a health or safety hazard.

Examples of permit-required confined spaces or enclosures may include BUT ARE NOT LIMITED TO: storage tanks, underground storage tanks (UST’s), UST excavations, stacks, pits, basements, silos, boilers, ventilation and exhaust ducts, manholes, sewers, tunnels, underground utility vaults, pipelines, diked areas, cold feed bins, concrete drums, concrete silos, and open topped space four feet or more in depth that is not subject to adequate ventilation.

3.4 Entry

The act of intentionally passing through an opening into a confined space. Entry occurs as soon as any part of the entrant's body breaks the plane of the opening.

3.5 Entry Permit

Written or printed document, which is the instrument by which the employer authorizes employees to enter a confined space.

3.6 Entry Without Permit/Attendant Certification

Confined spaces may be entered without the need for a written permit or attendant provided that: (1) the space is determined not to be a permit required confined space, or (2) the space can be maintained in a safe condition for entry by mechanical ventilation alone. All spaces shall be considered permit-required confined spaces until the pre-entry procedures demonstrate otherwise. Any employee conducting a pre-check shall have successfully completed the following: (1) review the written copy of the operating procedures, (2) control the atmospheric and engulfment hazards by effectively isolating, blinding, bleeding and/or locking out hazardous energy sources, (3) surveying the surrounding area to avoid hazards such as drifting vapors, (4) continuously test the atmosphere within the space to determine whether dangerous air contamination and/or oxygen deficiency exists.

3.7 Non-Permit Confined Space

A confined space that does not contain or, with respect to atmospheric hazards, have the potential to contain any hazard capable of causing death or serious physical harm.

3.8 Permit Spaces

Confined spaces that pose special dangers for entrants because their configurations hamper efforts to protect entrants from serious hazards such as toxic, explosive, or asphyxiating atmospheres.

3.9 Permit-Required Confined Space

A confined space that has one or more of the following characteristics: (1) contains or has a potential to contain a hazardous atmosphere; (2) contains a material that has the potential for engulfing an entrant; (3) has an internal configuration such that an entrant could be trapped or asphyxiated by inwardly converging walls or by a floor which slopes downward and tapers to a small cross-section; or (4) contains any other recognized safety or health hazard.

3.10 Purging

Displacing gasses, vapors, or other airborne contaminants from a confined space by ventilation or inert gas.

3.11 Acronyms

CFR- Code of Federal Regulations
OSHA – Occupational Safety and Health Administration (federal agency)
PPE – personal protective equipment
SCADA – Supervisory Control and Data Acquisition (plant control system)
SOP – Standard Operating Procedure

4 Responsibilities

4.1 Entry Supervisor

The entry supervisor has primary responsibility to evaluate and justify the need for confined space entry, issue the necessary confined space entry permits if required and determine the appropriate emergency rescue measures. Confined space entry permits require written approval by the designated person prior to entry.

NOTE: The Entry Supervisor is assumed to be the Plant Operator, Construction Supervisor or the person directly responsible for the facility.

4.2 The Safety Review Committee

The Safety Committee is responsible for review of confined space entry procedures, auditing field personnel's observance of the procedures, and designating individuals with the authority to approve confined space entry. This committee will be made up of the Operations contractor, plant personnel, and others as designated.

4.3 Authorized Entrant

The authorized entrant is responsible for knowing the hazards and understanding the consequences of exposure, maintaining contact with the attendant, understanding and utilizing the provided personal protective equipment, and exiting the permit required confined space if evaluation is ordered or there is a perception of danger.

4.4 Attendant

The attendant is responsible for remaining outside the permit confined space at all times, maintaining communication with authorized entrant, warning unauthorized persons to leave the area, ordering evacuation if necessary and contacting emergency personnel. This person will attend to his buddy's lifeline which is to be used throughout operations and shall be equipped with at least the same level of protection as the authorized entrant as well as

supplied air respirators suitable for IDLC atmospheres if a supplied air respirator is deemed required for the work assigned.

5 Procedures

Proper confined space entry procedures outlined below must be adhered to for any entry into a confined space for sampling, inspection or any work activity.

5.1 ENTRY DECISION

Entry into a confined space enclosure shall only be undertaken where there is no alternative means of accomplishing the required operation. **Confined space entries are to be recognized as a means of last resort.**

5.2 HAZARD IDENTIFICATION

The hazards if each confined space must be identified and evaluated for the severity prior to entry. All confined spaces shall be considered permit-required confined spaces until pre-entry procedures demonstrate otherwise.

All permit required confined spaces must be identified by posting danger signs, or by other equally effective means.

Workers are to immediately leave the permit space when any of the gas monitors' alarm set points are reached. Workers are not to return to the area until a supervisor who has completed gas detector training has used a direct reading gas detector to evaluate the situation and has determined that it is safe to enter.

5.3 ENTRY PERMIT

The permit SOP-21-005 is designed to ensure that the proper precautions are implemented prior to entry.

All items on the permit must be completed. If an item is not applicable then "N/A" must be written in the space. No blank spaces are to be left on the permit. An authorized person, all entrants and standby attendants must sign the permit. The permit must be posted at the space until the entry is completed or the work shift ends. The permit is applicable for a single work shift. The entry permit will serve as a safety-briefing outline before entry and will be reviewed by the entry supervisor with the authorized entrants and attendants.

The entry permit should identify:

1. The location of the confined space, a brief description of the entry task, date of entry and duration of permit.
2. Known and potential hazards that may be encountered in the confined space.
3. All mechanical apparatus within the confined space such as pumps, which if activated could injure the worker.
4. Isolation procedures to be implemented.
    a. Blanking and/or disconnecting of all pneumatic and hydraulic lines and fuel sources
    b. Electrical lockout and tagout (both)
    c. Mechanical isolation and tagout (both)
    d. Mechanical ventilation (volumes)
    e. Other hazardous energy sources
5. Safety and protective equipment required (specify routine and emergency requirements):
    a. Level of respiratory protection
    b. Personal protective equipment (PPE)
    c. Safety harness and/or lifelines
    d. Extraction devices
    e. Tools and electrical equipment approvals (including lighting and communication devices)
6. Pre-entry atmospheric monitoring and acceptable levels of contaminants:
    a. Oxygen level (19.5-23.5%)
    b. Combustible gas/vapor level (less than 10% LEL)
    c. Toxic substances level less than established TLV, PEL
7. Provisions for continuous atmospheric monitoring:
    a. Equipment
    b. Evacuation criteria
8. Equipment/procedures to maintain acceptable atmospheric conditions:

a. Purging, ventilation, flushing, inverting

9. Identification of entry team (authorized and eligible):
    a. Personnel to make entry (authorized entrant)
    b. Personnel on standby (attendant)
10. Emergency procedures and first aid:
    a. Communication procedures
    b. Equipment location
    c. Rescue team
11. Training required (specifics beyond section V-h. should be noted)
    a. Confined space entry
    b. Confined space rescue
    c. Respirator use (if required)
    d. PPE

5.4 WORK PRACTICES

5.4.1 Pre-Entry

As part of the pre-entry procedure, the entry supervisor shall review the entry permit with all authorized entrants and attendants and shall be present during the operation. Prior to entry the entry supervisor shall make a determination as to whether the confined space is a permit-required confined space.

5.4.2 Purging and Ventilation

All confined space enclosures shall be subject to purging and continuous ventilation prior to any actual entry. The only exception to this requirement is where the space meets the following criteria:

- No oxygen deficiency or enrichment (19.5 – 23.5%)
- LEL measurements are less than 10%
- Toxicity measurement is less than 10% of the established IDLH of the airborne contaminant present.

5.4.3 Isolation/Lockout and Tagging

Except for such confined spaces as manholes, sewers and tunnels, where complete isolation is not physically possible, all confined spaces shall be completely isolated from all other systems by such means as lockout-tagout, double block and bleed or physical disconnection of all lines into the confined space.

Employers are required to evaluate any mechanical hazard found in permit spaces and to take all steps necessary to protect entrants.

Refer to SOP-21-003 for Green Era Lockout/Tagout procedures.

5.4.4 Buddy System

All operation involving confined space entry will be performed by a team of not less than two (two) persons with specific duties as described in the Responsibilities section of this Standard Operating Procedure.

5.4.5 Communication

Buddies shall communicate with each other during the entire operation. If visual contact cannot be maintained verbal communication via wireless devices will be used to utilize the lifeline.

5.4.6 Testing and Monitoring

Appropriate initial testing must be conducted to assure the atmosphere in the confined space is safe. Monitoring will be conducted for oxygen content, combustible gasses/vapors, toxic contaminants, and any other contaminants identified. Potential toxic contaminants include asphalt fumes, hydrogen sulfide, carbon monoxide and quartz containing aggregate. OSHA requires that employers test and monitor their entry spaces with instruments which will detect all aspects of hazardous atmospheres that may be encountered in confined spaces. Monitoring of the confined space shall be done on a continuous basis while personnel are in the confined space enclosure.

Entry into a confined space <u>will not be permitted</u> under the following conditions:

- Oxygen concentrations less than 19.5% (148mm Hg*) or greater than 23.5% (178mm Hg*) *Based on Atmospheric Pressure of 760mm Hg (Sea Level)
- Flammability measurements greater than 10% of the lower explosive limits (LEL)
- Toxicity measurement indicating an IDLH atmosphere's existence in the confined space.

Initial atmospheric samples shall be drawn while outside the confined space at the following locations:

- Outside the entry point(s)
- Immediately inside the entry point(s)
- At least every four feet in depth of the confined space to the surface of the floor or any remaining stored product.

All initial-monitoring results will be recorded on the entry permit.

5.5 EQUIPMENT

Equipment necessary for safe entry including testing, monitoring, communication and personal protective equipment is to be provided, maintained and used.

5.5.1 Safety Equipment

Body harnesses or wrist type harnesses with lifelines shall be used by all confined space entrants. A full body or chest harness is to be used unless the employer can demonstrate that it is infeasible or creates a greater hazard. Lifelines shall be attached to extraction devices outside the confined space so that non-entry rescues may be performed. All permit spaces with a vertical depth of more than 5 feet require a mechanical retrieval device be available and set-up prior to entry.

5.5.2 Illumination

Adequate illumination must be provided.

5.5.3 Equipment Requirements

All tools and other equipment, including monitoring instruments for use in confined spaces shall be inspected for compliance with the following requirements:

- Tools and equipment will be kept clean and in good state of repair
- All electrical equipment including portable tools, lighting and power cords shall meet approvals in the accordance with OSHA regulation found in 29 CFR 1910 subpart S, including provisions for ground fault interruption protection as well as visual inspection of equipment for defects or damage.
- Lighting used in confined spaces shall be of explosion proof design equipped with necessary guards and bearing Underwriters Laboratories or other approval listings.

- Air activated tools shall be used where flammable liquids are present and shall be grounded to the confined space
- Compressed gas cylinders, except those that are part of SCBA or resuscitation equipment, shall never be permitted inside a confined space. Cylinders used to supply compressed gasses to confined spaces shall be turned off at the cylinder valve when not in actual use and the supply lines will be removed.
- Ladders , scaffolding, and staging shall be adequately designed and secured in conformance with OSHA regulations found in 29 CFR 1920 subpart D.
- Any equipment or instrumentation subject to use in a confined space where flammable atmospheres may occur shall be listed as explosion proof or intrinsically safe by a recognized testing laboratory.

5.6 RESCUE

If it becomes necessary to remove a worker from a confined space, the Attendant will communicate through pre-designated communication network and request assistance. The following information will be given:

- Location
- Request for emergency oxygen supply and first-aid kit
- Request for self-contained air supply with a full face mask, safety harness and lifeline
- Call for professional medical assistance

BEFORE BEGINNING RESCUE, CONFIRM THAT COMMUNICATION WAS RECEIVED AS TRANSMITTED AND THAT ASSISTANCE IS FORTHCOMING.

If the person within the confined space is secured to a winch, begin hauling him or her out. This procedure must be performed at a speed that will not further injure the person. ALWAYS SUMMON ASSISTANCE BEFORE BEGINNING A RESCUE ATTEMPT. If the lifeline is not secured to a winch, the attendant will secure lifeline.

ENTRY SHOULD NOT BE MADE BY ATTENDANT WITHOUT RESCUE ASSISTANCE.

Rescue Team Members

Outside rescue groups can be used if they are informed of the potential hazards and have been given access to review the permit-required spaces prior to rescue operation.

5.7 EMPLOYEE INFORMATION AND TRAINING

Employees shall be trained to recognize confined spaces, the hazards of working in a confined space and the requirements of this procedure.

Training shall include:

- Hazard recognition associated with confined space operations
- Emergency entry and egress procedures
- Respiratory protection
- Lockout and tagout procedures
- Safety equipment
- Rescue operations
- Permit system
- Work practices
- Use of testing equipment
- Atmosphere testing, following completed gas detector training for 'head worker.'

Optional training shall include:

- Cardiopulmonary resuscitation (CPR)
- First aid

5.8 SAFETY ITEMS

Measures should be taken to identify potential safety hazards and implement preventative and/out corrective measures before entering confined spaces. Follow other applicable safety procedures when appropriate.

Potential safety hazards or preventative measures may include:

- Guarding opening to prevent accidental entry
- Evaluate climbing devices (ladders, rungs, etc.) for security and stability
- Use lifting aids to move heavy items (i.e. manhole covers) to prevent back and hand injury
- Observe heat and cold stress procedures as applicable
- Provisions for protection from biological contamination

5.9 SUBCONTRACTORS

Subcontractor performing work onsite shall be provided with all available information on confined space hazards on efforts to comply with federal and state regulations, and other workplace hazards, safety rules and emergency procedures necessary to complete the task safely.

5.10 RECORDKEEPING

Copies of the entry permit will be maintained as an employee exposure record as required under 29 CFR 1910.20. All entry permits must be retained for at least one year.

5.11 ANNUAL REVIEW OF CONFINED SPACE ENTRIES

All confined space entry permits must be retained for at least 36 months for review. Permits may be scanned and saved electronically to Green Era's cloud storage. The program shall be revised as necessary to ensure employees are properly protected. The program shall be revised at any time when deficiencies are identified.

6 References

6.1 Green Era Health and Safety Manual

6.2 SOP-21-003 Lockout/Tagout procedures

6.3 FORM-21-002 Confined Space Entry Permit (form)

Green Era	**Standard Operating Procedure** **Feedstock Specifications**	SOP-21-006 Revision: 2 Effective: 10/27/21 Reviewed: 02/11/22

Rev.	Description	Date
2	Added Revision tracking table. Noted that 10% contamination is by weight. Added COD range for high-strength waste Added excluded waste types: bulk cardboard/paper products, Loads with high grit content (examples: hatchery waste) Loads with high cellulosic organic matter (examples: pulp/paper waste, animal bedding) Added "Source Approval" section.	2/11/22

GREEN ERA ORGANICS RECYCLING FACILITY AT 650 WEST 83RD

The Green Era Organics Recycling Facility will receive 80,000 tons of locally collected food waste per year. The food waste delivered to Green Era will be automatically processed to remove packaging such as plastic bags, metals, and rigid plastics from the biodegradable material. The cleaned food waste pulp will then be treated in an anaerobic digestor. This process produces renewable natural gas that will be received by People's Gas. The digested pulp is separated into compostable solids and water. The water is discharged to the City of Chicago sewer for final treatment at the Stickney Water Reclamation Facility. The compostable solids will be used by Urban Growers Collective to support their 8 existing urban organic farms that supply locally grown produce to Chicago's South Side and are a model of innovative community based agriculture.

POTENTIAL GENERATORS

- Supermarkets
- Restaurants/Diners/Delis
- Bakeries
- Cafeterias/Commissaries
- Schools
- Nursing Homes
- Hospitals
- Correctional Facilities
- Hotels/Resorts
- Breweries
- Food Manufacturers
- Residential curbside organics collection

TYPES OF WASTE ACCEPTED AT GREEN ERA

Food waste, including normal packaging (e.g., plastic bags, aluminum and steel cans) will be accepted. Dumpsters/loads must not contain more than 10% contaminants (no less than 90% food waste) by weight. Loads must not contain more than 3% grit by weight or materials that produce grit during mechanical separation. The following are materials that will be accepted for organics recycling:

- Food Waste
- Grease Trapping Waste (Fats, oils, and grease from restaurant and food service grease traps)
- Industrial Food Processing waste (commercial bakeries, breweries, meat processors)
- High-strength waste: pumpable waste greater than 150,000 mg/L COD

CONTAINERS AND PACKAGING

Food waste packaging including metal cans, plastic bags, foil lined paperboard, food soiled paper, and other general packaging is acceptable.

Food waste loads may not contain bulk cardboard, newsprint, or other paper products that are not being used as product packaging. Paper products should be source-separated by the generator and recycled as appropriate.

Palletized waste will be accepted by this facility. Pallets, shrink wrap, and clean corrugated cardboard will be separated prior to mechanical processing by Green Era.

TYPES OF WASTE NOT ACCEPTED AT GREEN ERA

General Waste

- Household Waste
- C&D Debris
- Yard Waste
- Electronic Waste
- Bulk cardboard and paper products

Hazardous Waste

- Cleaning Agents
- Chemicals
- Medications/Medical Waste
- Batteries
- Pesticides

Other Waste

- Pet Waste
- Diapers
- Loads with high grit content (examples: hatchery waste)
- Loads with high cellulosic organic matter (examples: pulp/paper waste, animal bedding)

Source Approval

- New generators and sources will be approved based on a description of the process that produces the waste, major constituents in the waste, COD content, total solids, and total volatile solids. Macro and micro-nutrient content, salt content, metals, and other minor constituents may also be evaluated depending on the process that produces the waste. Flask biogas methane potential testing may be required for some wastes that may inhibit the anaerobic process. Parameter ranges for acceptance will vary depending on the contracted mix of feedstocks that are processed by Green Era and the expected volume of waste being evaluated. Wastes from known processes/sources may be accepted without COD, TS, VS testing, such as grocery produce waste, kitchen wastes, and grease trapping waste.

GENERAL PROTOCOL

- Do not mix loads from approved generators/sources with waste from unapproved sources
- Do not combine FOG with sanitary (septic) waste
- Do not mix loads of commercial food waste with household MSW that are coming to the facility

RECEIPT OF MATERIALS AT GREEN ERA

- Waste materials to be brought to Green Era shall not be collected from unauthorized businesses/generators
- The facility is open for waste deliveries Monday through Saturday between 6:00 AM and 4:00 PM
- Before or after-hour queuing on Wallace, W. 83rd, or any other surrounding public/private street is prohibited
- Loads coming into the Green Era Facility must be adequately covered or enclosed

- Trucks delivering putrescible waste must maintain door/gate/valve seals so that no leakage occurs onto public roadways
- Green Era will not accept haulers that do not comply with this protocol and these rules or appropriate CDOT regulations, including traffic laws

INSTRUCTIONS UPON ARRIVAL AND DEPARTURE

- Upon entering the Green Era Facility:
  - Enter the Green Era facility at the Wallace Street gate
  - Turn left towards the main building.
  - If delivering solids material, back thru the overhead bay door to the tipping wall, when instructed to proceed by the attendant.
  - If delivering pumpable food waste, pull thru the north bay door and park in the building near the liquids receiving tanks.
- Upon entering the Operations Building:
  - The operator will close the bay door after entering the building.
  - The floor attendant will provide authorization to tip the load into reception pit after receiving the waste manifest and visually inspecting the load.
  - Tanker trucks bringing fats, oils or grease or other pumpable liquid feedstock will unload through a hose to the liquid receiving tank. After providing the waste manifest to the plant attendant, connect the tanker drain nozzle to the hose at the designated tank and proceed to off-load when instructed.
- Upon Exiting the Operations Building:
  - Rinse off beds/tailgate while inside building, if necessary
  - Pull forward toward the bay door, which will open automatically as the truck approaches and close once the truck clears the doorway
  - Proceed to the Wallace Street Gate to exit the facility.

Green Era

Location: 650 West 83rd Chicago, IL 60620

operations@greenerachicago.com

https://www.greenerachicago.com/

Green Era	**Standard Operating Procedure** **Feedstock Manifest Recordkeeping**	SOP-21-007 Revision: 0 Effective: 08/20/21 Reviewed: 08/20/21

1 Purpose

This SOP establishes consistent methods for tracking and recording feedstock deliveries to the facility to achieve timely and accurate invoicing and payment.

2 Scope

This SOP applies to facility operations at the Green Era facility and affiliated contract operations staff that manage accounting services.

3 Definitions and Acronyms

3.1 Generator

The generator is the business where the feedstock was generated and picked-up.

3.2 Manifest

The manifest is the paper record of the material that is being hauled by the truck and delivered to the plant. There will be a separate manifest for each waste generator (see 4.1)

3.3 Manifest Number

The unique document number on each manifest form.

3.4 Plant Operator

Onsite personnel who have the designated responsibility to operate and maintain the facility on behalf of Green Era.

3.5 Acronyms

SOP – Standard Operating Procedure

4 Procedures

4.1 Required Paperwork with each load (Manifests)

Feedstock deliveries to Green Era must have a separate manifest for each generator. Each manifest should have a unique manifest number that is assigned by the hauler and clearly printed on the manifest.

Pumper services that empty grease traps may have multiple manifests per load. For example, if they pumped 200 gallons from a Kroger Grocery store and then pumped 100 gallons from a Taco Bell, they will need to provide separate manifests for Kroger and Taco Bell. If they picked up 100 gallons from Taco Bell on High Street and then picked up 125 gallons from a Taco Bell in Grove City, they will need a separate manifest for each physical location, even if the restaurants are owned by the same business.

The manifest should be signed by the driver and the generator. The manifest must have a description of the waste, the volume or weight of the waste, the location and business name of the generator, and the time of collection.

4.2 Approval to discharge/dump

No customer shall be permitted to discharge or dump their load until a manifest is provided to the Plant Operator and approved.

4.2.1 Afterhours delivery with pre-approval

Certain haulers/customers may be approved for after-hours delivery. The list of customers approved for afterhours delivery shall be maintained by the Plant and posted.

4.2.2 Procedure if the driver doesn't have a load volume or weight, but is a pre-approved customer

1. If the truck is full, then list the total certified tank volume for that trailer.
2. Alternately the driver can take the load to a nearby truck scale and provide a gross weight. They should either provide a scale ticket or have the scale operator sign the manifest.
3. If the tare weight is unknow, after unloading, return to the scale send an electronic image of the scale ticket and completed manifest copy back to the plant, operations@greenerachicago.com

If the driver is unwilling to comply with Green Era's requirements

1. Refuse the load

4.2.3 If the generator or waste type cannot be identified, or if they are not currently set-up as a customer.

1. Refuse the load
2. Provide the Green Era customer contact sheet to the driver so his company can call and become an approved customer.

4.3 Review and Approval by Plant operator

The date/time when the load was received should be stamped on the original manifests using the document stamp. If the electronic document stamp isn't operable, the date/time should be handwritten on the manifest and signed by the plant operator. A sequential manifest number should be assigned and also handwritten on the manifest.

The Green Era employee that receives the paperwork shall either sign the document in ink, rubber stamp their signature, or apply a label with their name and signature.

A hardcopy of the original manifest must be left at the plant. Either a carbon copy or a photocopy is acceptable.

4.4 Recording the manifest information in the Plant Log

The plant operator will record each manifest in the Plant electronic log. An Excel workbook or database application may be used. The Log should be sortable and searchable by any field.

4.4.1 The following information shall be recorded for each manifest in the Plant Log.

- Hauler manifest number
- Date received
- Time received
- Gallons or Weight provided on the manifest
- Calculated volume (gallons) or weight (in both pounds and tons) depending on what the manifest reported
- Trucking company (hauler business name)
- Generator – business listed on manifest
- Material description (by category) FOG, food waste, etc..

4.4.2 Updating the Plant Log with each load.

Each load should be recorded in the plant log before the truck leaves the premises. This is an additional control to ensure that the information recorded on the manifest is legible. Any questions about the information on the manifest should be addressed with the driver.

4.5 Record retention

All manifests must be scanned daily by the Plant Operator and saved as a PDF file in a shared cloud storage account.

Original manifests will be kept on file at the plant for 120 days. After 120 days the original manifests will be destroyed. The electronic records will be saved for a minimum period of 7 years.

4.6 Reconciliation

Following each calendar week, Sunday through Saturday, the designated Green Era staff shall reconcile the Plant feedstock log file with the scanned manifests. Each manifest should be checked against the data entry in the log for accuracy.

Any manifests listed in the log, but not in the scanned record file should be noted and reported to the Plant. If the Plant cannot locate the original manifest copy, Green Era shall contact the trucking company for a copy of the manifest to verify that the load was received.

This weekly reconciliation shall be completed by the close of business Wednesday for the preceding week. When the reconciliation is completed, a note should be made in the Plant log file listing the person who performed the check and the completion date.

The Log and supporting documents shall be emailed to Accounts Receivable and posted in a shared Cloud storage folder with an email notification that the files have been uploaded.

Any errors or discrepancies identified during the invoice preparation should be communicated to the Plant Operators within 2 weeks of the date when the load was received.

4.7 Invoicing

Invoices shall be prepared on the first and third Friday of each month, or 24 times per calendar year, for feedstock customers.

5 References

5.1 Load Manifest Workflow – SOP-21-008

Green Era	**Standard Operating Procedure** **Feedstock Manifest Workflow**	SOP-21-008 Revision: 0 Effective: 08/20/21 Reviewed: 08/20/21

Frequency	Responsibility	Action	Process
Monday – Saturday	Customer	Feedstock Delivery	
Every load, no exceptions	Customer	Driver provides a unique manifest for each generator.	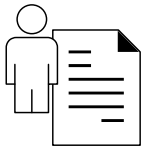
Every manifest	Green Era Facility Operator	Review manifest - date, sign, and retain copy.	
Every manifest	Green Era Facility Operator	Record each manifest in Plant Log (Excel spreadsheet)	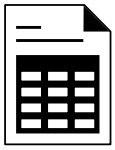
By close of business daily	Green Era Facility Operator	Scan manifests daily and save to cloud folder as PDF	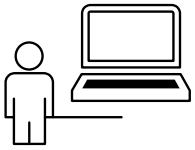
By close of business daily	Green Era Facility Operator	File original manifests. Retain hardcopies at the plant for 120 days.	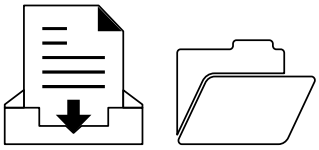
Weekly	Green Era Operations operations@greenerachicago.com	Reconcile Plant Log with the scanned manifests	
2X per month	Green Era Accounts Receivable accounting@greenerachicago.com	Approve and invoice	

ATTACHMENT 3
OWNER'S AUTHORIZATION LETTER

Green Era Educational NFP

To Whom It May Concern:

I, Erika Allen, as President of Green Era Educational NFP, the owner of the property addressed as 650 West 83rd Street in Chicago, Illinois, do hereby authorize the use of the property as a liquid waste handling facility. The facility is to be developed into a facility that receives and recycles food waste by anaerobic digestion, producing biomethane and dewatered digestate cake.

Sincerely,

Erika Allen

Erika Allen, President
Green Era Educational NFP

State of Texas, County of Travis

Subscribed and sworn to before me this 15th day of February, 2022 by Erika Allen.

NOTARY PUBLIC STATE OF TEXAS

Jennifer Jo Thomas

ID NUMBER
133341819
COMMISSION EXPIRES
September 20, 2025

Jennifer Jo Thomas

Notary Public

Notarized online using audio-video communication

My commission expires: 09/20/2025

Notary Public, State of Texas

ATTACHMENT 4
TAX DOCUMENTATION

Property Characteristics for PIN:

20-33-119-024-0000

PROPERTY ADDRESS

8158 S WALLACE ST
CHICAGO
00000
Township: LAKE

MAILING ADDRESS

PROPERTY CHARACTERISTICS

CURRENT INFORMATION

Assessed Value:
(2020 Board Final)

Assessment Information:	0
Estimated Property Value:	
Lot Size (SqFt):	0
Building (SqFt):	
Property Class:	0-00
Tax Rate :	0.000
Tax Code :	72001

TAX BILLED AMOUNTS & TAX HISTORY

2020: $0.00 Exempt PIN
2019: $0.00 Exempt PIN
2018: $0.00 Exempt PIN
2017: $0.00 Exempt PIN
2016: $0.00 Exempt PIN
*=(1st Install Only)

EXEMPTIONS

2020: 0 Exemptions Received
2019: 0 Exemptions Received
2018: 0 Exemptions Received
2017: 0 Exemptions Received
2016: 0 Exemptions Received

APPEALS

2020: Not Available
2019: Not Available
2018: Appeal Information
2017: Appeal Information
2016: Appeal Information

REFUNDS AVAILABLE

No Refund Available

TAX SALE (DELINQUENCIES)

2020: Tax Sale Has Not Occurred
2019: Tax Sale Has Not Occurred
2018: Tax Sale Has Not Occurred
2017: No Tax Sale
2016: No Tax Sale

DOCUMENTS, DEEDS & LIENS

1535029033 - MORTGAGE - 12/16/2015
1535029032 - AGREEMENT - 12/16/2015
1535029031 - QUIT CLAIM DEED - 12/16/2015

All years referenced herein denote the applicable tax year (i.e., the year for which taxes were assessed). Parcels may from time to time be consolidated or subdivided. If information regarding a particular PIN appears to be missing for one or more tax years, it is possible that the PIN has changed due to a consolidation or subdivision. Users may contact the Cook County Clerk's Office for information regarding PIN lineage. Users should also note that the information displayed on this site does not include special assessments (which are billed and collected by municipalities) or omitted taxes (which are assessed on an ad hoc basis by the Cook County Assessor's Office). Please direct inquiries regarding the status of special assessments to your municipality. Questions regarding omitted taxes should be directed to the Assessor's Office.

Note: This printout cannot be used as a tax bill.

Property Characteristics for PIN:

20-33-124-001-0000

PROPERTY ADDRESS

650 W 83RD ST
CHICAGO
60620
Township: LAKE

MAILING ADDRESS

PROPERTY CHARACTERISTICS

CURRENT INFORMATION

Assessed Value:
(2020 Board Final)

Assessment Information:	0
Estimated Property Value:	
Lot Size (SqFt):	0
Building (SqFt):	
Property Class:	0-00
Tax Rate :	0.000
Tax Code :	72001

TAX BILLED AMOUNTS & TAX HISTORY

2020: $0.00 Exempt PIN
2019: $0.00 Exempt PIN
2018: $0.00 Exempt PIN
2017: $0.00 Exempt PIN
2016: $0.00 Exempt PIN
*=(1st Install Only)

EXEMPTIONS

2020: 0 Exemptions Received
2019: 0 Exemptions Received
2018: 0 Exemptions Received
2017: 0 Exemptions Received
2016: 0 Exemptions Received

APPEALS

2020: Not Available
2019: Not Available
2018: Appeal Information
2017: Appeal Information
2016: Appeal Information

REFUNDS AVAILABLE

No Refund Available

TAX SALE (DELINQUENCIES)

2020: Tax Sale Has Not Occurred
2019: Tax Sale Has Not Occurred
2018: Tax Sale Has Not Occurred
2017: No Tax Sale
2016: No Tax Sale

DOCUMENTS, DEEDS & LIENS

1535029033 - MORTGAGE - 12/16/2015
1535029032 - AGREEMENT - 12/16/2015
1535029031 - QUIT CLAIM DEED - 12/16/2015

All years referenced herein denote the applicable tax year (i.e., the year for which taxes were assessed). Parcels may from time to time be consolidated or subdivided. If information regarding a particular PIN appears to be missing for one or more tax years, it is possible that the PIN has changed due to a consolidation or subdivision. Users may contact the Cook County Clerk's Office for information regarding PIN lineage. Users should also note that the information displayed on this site does not include special assessments (which are billed and collected by municipalities) or omitted taxes (which are assessed on an ad hoc basis by the Cook County Assessor's Office). Please direct inquiries regarding the status of special assessments to your municipality. Questions regarding omitted taxes should be directed to the Assessor's Office.

Note: This printout cannot be used as a tax bill.

Property Characteristics for PIN:

20-33-124-002-0000

PROPERTY ADDRESS

8234 S WALLACE ST
CHICAGO
00000
Township: LAKE

MAILING ADDRESS

PROPERTY CHARACTERISTICS

CURRENT INFORMATION

Assessed Value:
(2020 Board Final)
Assessment Information: 0
Estimated Property Value:

Lot Size (SqFt): 0
Building (SqFt):
Property Class: 0-00

Tax Rate : 0.000

Tax Code : 72001

TAX BILLED AMOUNTS & TAX HISTORY

2020: $0.00 Exempt PIN
2019: $0.00 Exempt PIN
2018: $0.00 Exempt PIN
2017: $0.00 Exempt PIN
2016: $0.00 Exempt PIN
*=(1st Install Only)

EXEMPTIONS

2020: 0 Exemptions Received
2019: 0 Exemptions Received
2018: 0 Exemptions Received
2017: 0 Exemptions Received
2016: 0 Exemptions Received

APPEALS

2020: Not Available
2019: Not Available
2018: Appeal Information
2017: Appeal Information
2016: Appeal Information

REFUNDS AVAILABLE

No Refund Available

TAX SALE (DELINQUENCIES)

2020: Tax Sale Has Not Occurred
2019: Tax Sale Has Not Occurred
2018: Tax Sale Has Not Occurred
2017: No Tax Sale
2016: No Tax Sale

DOCUMENTS, DEEDS & LIENS

1535029033 - MORTGAGE - 12/16/2015
1535029032 - AGREEMENT - 12/16/2015
1535029031 - QUIT CLAIM DEED - 12/16/2015

All years referenced herein denote the applicable tax year (i.e., the year for which taxes were assessed). Parcels may from time to time be consolidated or subdivided. If information regarding a particular PIN appears to be missing for one or more tax years, it is possible that the PIN has changed due to a consolidation or subdivision. Users may contact the Cook County Clerk's Office for information regarding PIN lineage. Users should also note that the information displayed on this site does not include special assessments (which are billed and collected by municipalities) or omitted taxes (which are assessed on an ad hoc basis by the Cook County Assessor's Office). Please direct inquiries regarding the status of special assessments to your municipality. Questions regarding omitted taxes should be directed to the Assessor's Office.

Note: This printout cannot be used as a tax bill.

ATTACHMENT 5
ZONING DOCUMENTATION

19881

Reclassification Of Area Shown On Map No. 18-D.
(Application No. 19908)
(Common Address: 8158 S. Woodlawn Ave.)

[O2018-9890]

Be It Ordained by the City Council of the City of Chicago:

SECTION 1. Title 17 of the Municipal Code of Chicago, the Chicago Zoning Ordinance, be amended by changing all the RS3 Residential Two-Flat, Townhouse and Multi-Unit District symbols and indications as shown on Map Number 18-D in the area bounded by:

a line 36 feet north of and parallel to East 72nd Street; South Woodlawn Avenue; East 72nd Street; and the alley next west of and parallel to South Woodlawn Avenue,

to those of a B1-2 Neighborhood Shopping District and a corresponding use district is hereby established in the area above described.

SECTION 2. This ordinance shall be in force and effect from and after its passage and due publication.

Reclassification Of Area Shown On Map No. 20-F.
(As Amended)
(Application No. 19881)
(Common Address: 650 W. 83rd St.)

IPD 1443

[SO2018-9262]

Be It Ordained by the City Council of the City of Chicago:

SECTION 1. Title 17 of the Municipal Code of Chicago, the Chicago Zoning Ordinance, be amended by changing all the M1-2 Limited Manufacturing/Business Park District symbols and indications as shown on Map Number 20-F in the area bounded by:

beginning at a line 594 feet north of and parallel to West 83rd Street, as measured from the intersection of South Wallace Street and West 83rd Street; South Wallace Street; West 83rd Street; and the easterly right-of-way line of the Chicago, Rock Island, and Pacific Railroad running to the northeast, back to the point of beginning,

to those of an M3-2 Heavy Industry District and a corresponding use district is hereby established in the area above described.

SECTION 2. That the Chicago Zoning Ordinance be amended by changing all the M3-2 Heavy Industry District symbols and indications within the area herein above described to the designation of Industrial Planned Development Number 1443, which is hereby established in the area above described, subject to such use and bulk regulations as are set forth in the Plan of Development herewith attached and made a part thereof and to no others..

SECTION 3. This ordinance shall be in force and effect from and after its passage and due publication.

Industrial Planned Development Statements referred to in this ordinance read as follows:

Industrial Planned Development Statements.

1. The area delineated herein as Industrial Planned Development Number 1443 ("Planned Development") consists of approximately 387,902 net square feet of property which is depicted on the attached Planned Development Boundary and Property Line Map ("Property") and is owned by the City of Chicago. The Applicant is Green Era Educational, NFP.

2. The requirements, obligations and conditions contained within this Planned Development shall be binding upon the Applicant, its successors and assigns and, if different than the Applicant, the legal titleholders and any ground lessors. All rights granted hereunder to the Applicant shall inure to the benefit of the Applicant's successors and assigns and, if different than the Applicant, the legal titleholder and any ground lessors. Furthermore, pursuant to the requirements of Section 17-8-0400 of the Chicago Zoning Ordinance, the Property, at the time of application for amendments, modifications or changes (administrative, legislative or otherwise) to this Planned Development are made, shall be under single ownership or designated control. Single designated control is defined in Section 17-8-0400 of the Zoning Ordinance.

3. All applicable official reviews, approvals or permits are required to be obtained by the Applicant or its successors, assignees or grantees. Any dedication or vacation of streets or alleys or grants of easements or any adjustment of the right-of-way shall require a separate submittal to the Department of Transportation on behalf of the Applicant or its successors, assigns or grantees.

   Any requests for grants of privilege, or any items encroaching on the public way, shall be in compliance with the Planned Development.

Ingress or egress shall be pursuant to the Planned Development and may be subject to the review and approval of the Departments of Planning and Development and Transportation. Closure of all or any public street or alley during demolition or construction shall be subject to the review and approval of the Department of Transportation.

Pursuant to a negotiated and executed Perimeter Restoration Agreement ("Agreement") by and between the Department of Transportation's Division of Infrastructure Management and the Applicant, the Applicant shall provide improvements and restoration of all public way adjacent to the property, which may include, but not be limited to, the following as shall be reviewed and determined by the Department of Transportation's Division of Infrastructure Management:

-- Full width of streets

-- Full width of alleys

-- Curb and gutter

-- Pavement markings

-- Sidewalks

-- ADA crosswalk ramps

-- Parkway and landscaping

The Perimeter Restoration Agreement must be executed prior to any Department of Transportation and Planned Development Part II Review permitting. The Agreement shall reflect that all work must comply with current Rules and Regulations and must be designed and constructed in accordance with the Department of Transportation's Construction Standards for Work in the Public Way and in compliance with the Municipal Code of Chicago Chapter 10-20. Design of said improvements should follow the Department of Transportation's Rules and Regulations for Construction in the Public Way as well as The Street and Site Plan Design Guidelines. Any variation in scope or design of public way improvements and restoration must be approved by the Department of Transportation.

4. This plan of development consists of 16 Statements; a Bulk Regulations Table; an Existing Land-Use Map; a Planned Development Boundary and Property Line Map; Site Plan; Landscape Plan; and Building Elevations dated March 21, 2019 submitted herein. Full-sized copies of the Site Plan, Landscape Plan and Building Elevations are on file with the Department of Planning and Development. In any instance where a provision of this Planned Development conflicts with the Chicago Building Code,

the Building Code shall control. This Planned Development conforms to the intent and purpose of the Zoning Ordinance, and all requirements thereto, and satisfies the established criteria for approval as a Planned Development. In case of a conflict between the terms of this Planned Development Ordinance and the Zoning Ordinance, this Planned Development Ordinance shall control.

5. The following uses are allowed in the area delineated herein as an Industrial Planned Development: anaerobic digester, community garden, indoor, outdoor and rooftop farm operation, food and beverage retail sales, general retail sales, artisanal, limited, general and intensive manufacturing and industrial service, liquid waste handling facilities, resource recovery facilities, transfer station, modified transfer station, wireless communication facilities, utilities minor and major, office, accessory parking, Class I, II and III recycling facilities, waste-related uses all other related and accessory uses.

   The applicant acknowledges that all operations will follow the use standards of Section 17-9-0117A with respect to Class III recyclers. The applicant acknowledges that any and all composting on the property would be conducted in-vessel and be in compliance with the standards as listed in the Chicago Municipal Code under Section 7-28-215.

*5. On-premises signs and temporary signs, such as construction and marketing signs, shall be permitted within the Planned Development, subject to the review and approval of the Department of Planning and Development. Off-premises signs are prohibited within the boundary of the Planned Development.

6. For purposes of height measurement, the definitions in the Zoning Ordinance shall apply. The height of any building shall also be subject to height limitations, if any, established by the Federal Aviation Administration.

7. The maximum permitted Floor Area Ratio ("FAR") for the site shall be in accordance with the attached Bulk Regulations Table. For the purposes of FAR calculations and measurements, the definitions in the Zoning Ordinance shall apply. The permitted FAR identified in the Bulk Regulations Table has been determined using a Net Site Area of 387,923 square feet.

8. Upon review and determination, "Part II Review", pursuant to Section 17-13-0610 of the Zoning Ordinance, a Part II Review fee shall be assessed by the Department of Planning and Development. The fee, as determined by staff at the time, is final and binding on the Applicant and must be paid to the Department of Revenue prior to the issuance of any Part II Approval.

---

* Editor's Note: Numbering sequence error; Statement 5 duplicated in original document.

9. The Site and Landscape Plans shall be in substantial conformance with the Landscape Ordinance and any other corresponding regulations and guidelines. Final landscape plan review and approval will be by the Department of Planning and Development. Any interim reviews associated with site plan review or Part II Reviews, are conditional until final Part II Approval.

10. The Applicant shall comply with Rules and Regulations for the Maintenance of Stockpiles promulgated by the Commissioners of the Departments of Streets and Sanitation, Environment and Buildings, under Section 13-32-125 of the Municipal Code, or any other provision of that Code.

11. The terms and conditions of development under this Planned Development ordinance may be modified administratively, pursuant to Section 17-13-0611-A of the Zoning Ordinance by the Zoning Administrator upon the application for such a modification by the Applicant, its successors and assigns and, if different than the Applicant, the legal titleholders and any ground lessors.

*13. The Applicant acknowledges that it is in the public interest to design, construct and maintain the project in a manner which promotes, enables and maximizes universal access throughout the Property. Plans for all buildings and improvements on the Property shall be reviewed and approved by the Mayor's Office for People with Disabilities to ensure compliance with all applicable laws and regulations related to access for persons with disabilities and to promote the highest standard of accessibility.

14. The Applicant acknowledges that it is in the public interest to design, construct, renovate and maintain all buildings in a manner that provides healthier indoor environments, reduces operating costs and conserves energy and natural resources. The Applicant shall obtain the number of points necessary to meet the requirements of the Chicago Sustainable Development Policy, in effect at the time of the Part II Review process is initiated for each improvement that is subject to the aforementioned policy and must provide documentation verifying compliance.

15. The Applicant acknowledges that it is the policy of the City to maximize opportunities for Minority- and Women-owned Business Enterprises ("M/WBEs") and city residents to compete for contracts and jobs on construction projects approved through the planned development process. To assist the city in promoting and tracking such M/WBE and city resident participation, an applicant for planned development approval shall provide information at three points in the City approval process. First, the Applicant must submit to DPD, as part of its application for planned development approval, an M/WBE Participation Proposal. The M/WBE Participation Proposal must

---

* Editor's Note: Numbering sequence error; Statement 12 missing in original document.

identify the applicant's goals for participation of certified M/WBE firms in the design, engineering and construction of the project, and of City residents in the construction work. The City encourages goals of 26 percent MBE and 6 percent WBE participation (measured against the total construction budget for the project or any phase thereof), and *(ii) 50 percent City resident hiring (measured against the total construction work hours for the project or any phase thereof). The M/WBE Participation Proposal must include a description of the applicant's proposed outreach plan designed to inform M/WBEs and City residents of job and contracting opportunities. Second, at the time of the applicant's submission for Part II Permit Review for the project or any phase thereof, the applicant must submit to DPD (a) updates (if any) to the applicant's preliminary outreach plan, (b) a description of the applicant's outreach efforts and evidence of such outreach, including, without limitation, copies of certified letters to M/WBE contractor associations and the ward office of the alderman in which the project is located and receipts thereof; (c) responses to the applicant's outreach efforts, and (d) updates (if any) to the applicant's M/WBE and City resident participation goals. Third, prior to issuance of a Certificate of Occupancy for the project or any phase thereof, the applicant must provide DPD with the actual level of M/WBE and City resident participation in the project or any phase thereof, and evidence of such participation. In addition to the forgoing, DPD may request such additional information as the department determines may be necessary or useful in evaluating the extent to which M/WBEs and City residents are informed of and utilized in planned development projects. All such information will be provided in a form acceptable to the Zoning Administrator. DPD will report the data it collects regarding projected and actual employment of M/WBEs and City residents in planned development projects twice yearly to the Chicago Plan Commission and annually to the Chicago City Council and the Mayor.

16. This Planned Development shall be governed by Section 17-13-0612 of the Zoning Ordinance. Should this Planned Development ordinance lapse, the Commissioner of the Department of Planning and Development shall initiate a zoning map amendment to rezone the Property to the M3-2.

[Planned Development Area; Site Plan; Architectural Site Plan; Floor Plan; and Building Elevations A, B, C and D referred to in these Industrial Planned Development Statements printed on pages 100881 through 100887 of this *Journal*.]

---

* Editor's Note: Numbering sequence error; (i) missing in original document.

Bulk Regulations and Data Table referred to in these Industrial Planned Development Statements read as follows:

Bulk Regulations And Data Table.

Gross Site Area:	437,923 square feet
Net Site Area:	387,902 square feet
Right-Of-Way Area:	50,021 square feet
Maximum Floor Area Ratio:	2.2
Principal Building Height Maximum:	75 feet
Accessory Building Height Maximum:	95 feet
Minimum Number of Off-Street Loading Spaces:	1 at 10 by 50
Minimum Number of Off-Street Parking Spaces:	22
Minimum Number of Bike Parking Spaces:	4
Minimum Required Setbacks:	Per Site Plan

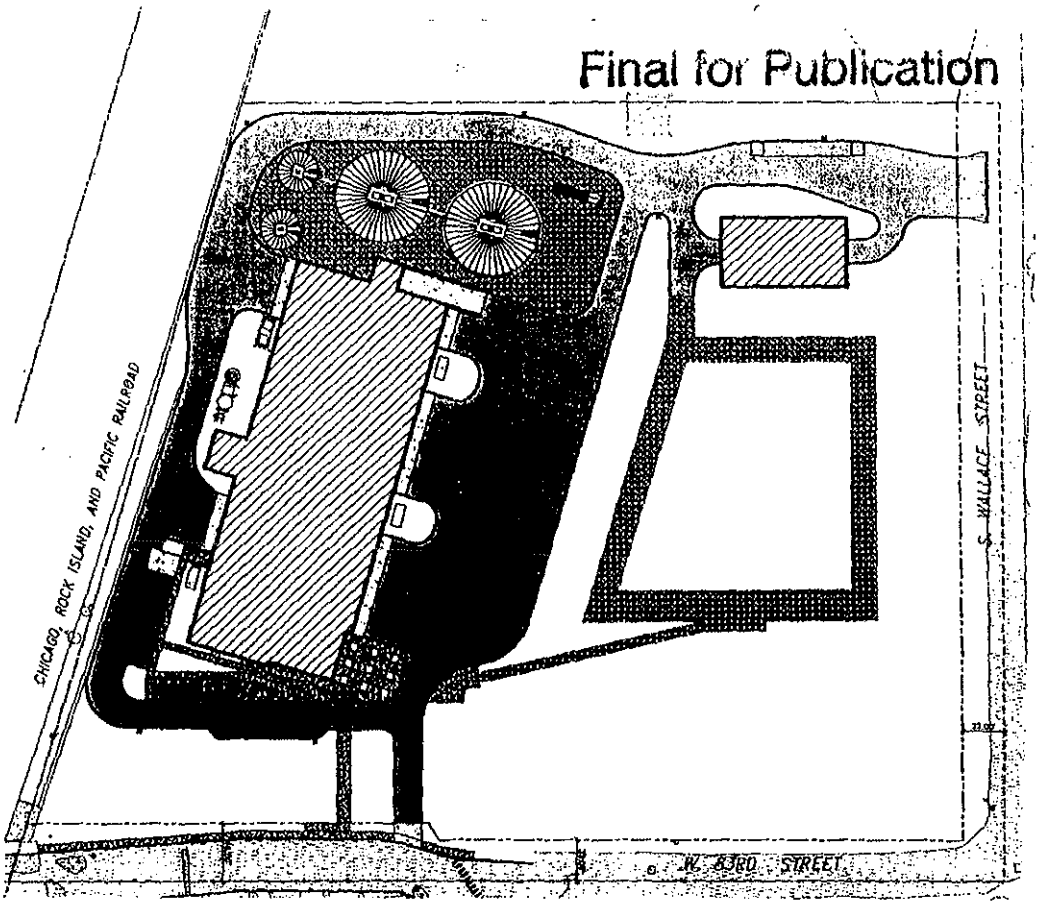

PD AREA

SCALE:1" = 100'

APPLICANT: GREEN ERA EDUCATIONAL NFP

ADDRESS: 650 W 83RD STREET CHICAGO, IL 60620
INTRODUCTION: DECEMBER 5, 2018

TERRA ENGINEERING LTD.
McBride Kelley Baurer Architects / Planners

01

Final for Publication

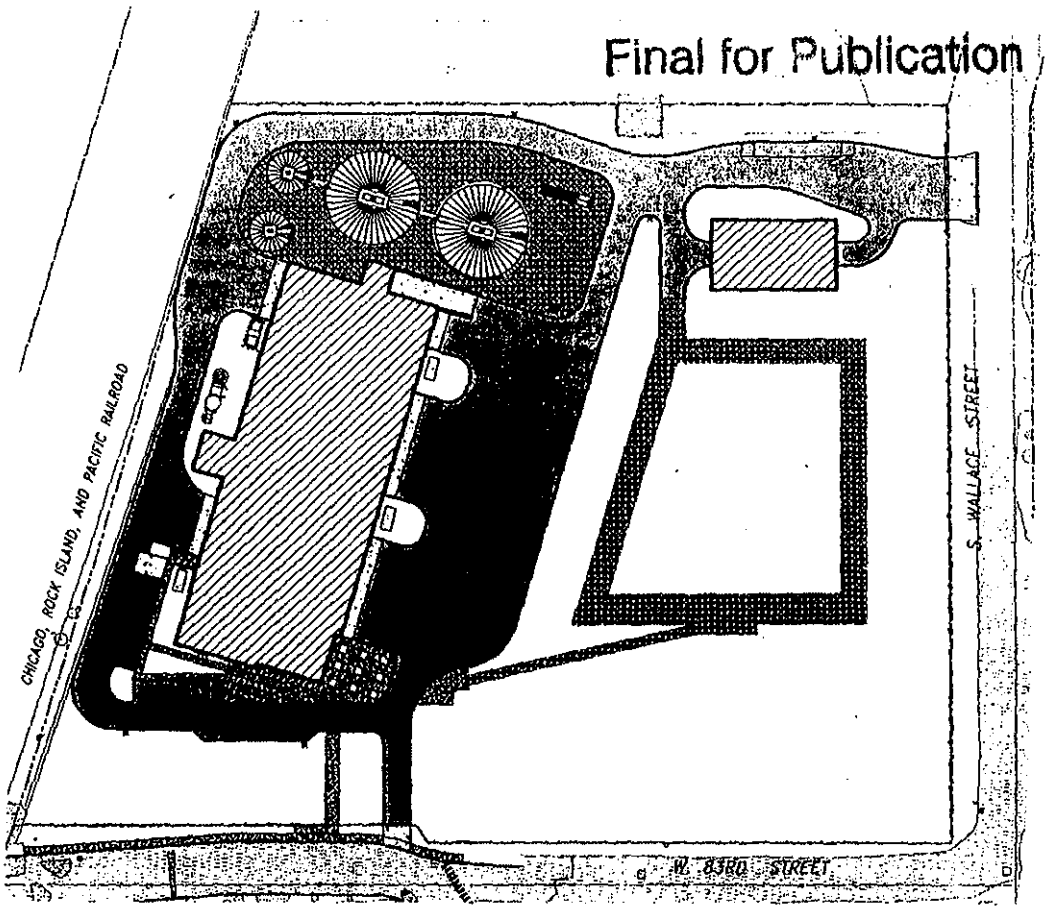

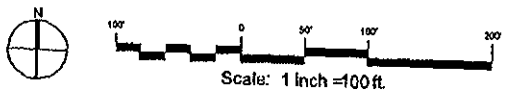

LEGEND:

- PROPERTY LINE
- BUILDING
- CONCRETE WALK AND BASE
- ASPHALT PAVEMENT AND BASE
- CONCRETE PAVEMENT AND BASE
- GRAVEL
- CONCRETE CURB AND GUTTER

SITE PLAN

SCALE:1" = 100'

APPLICANT: GREEN ERA EDUCATIONAL NFP

ADDRESS: 650 W 83RD STREET CHICAGO, IL 60620
INTRODUCTION: DECEMBER 5, 2018

TERRA ENGINEERING LTD.

McBride Kelley Baurer Architects / Planners

02

Final for Publication

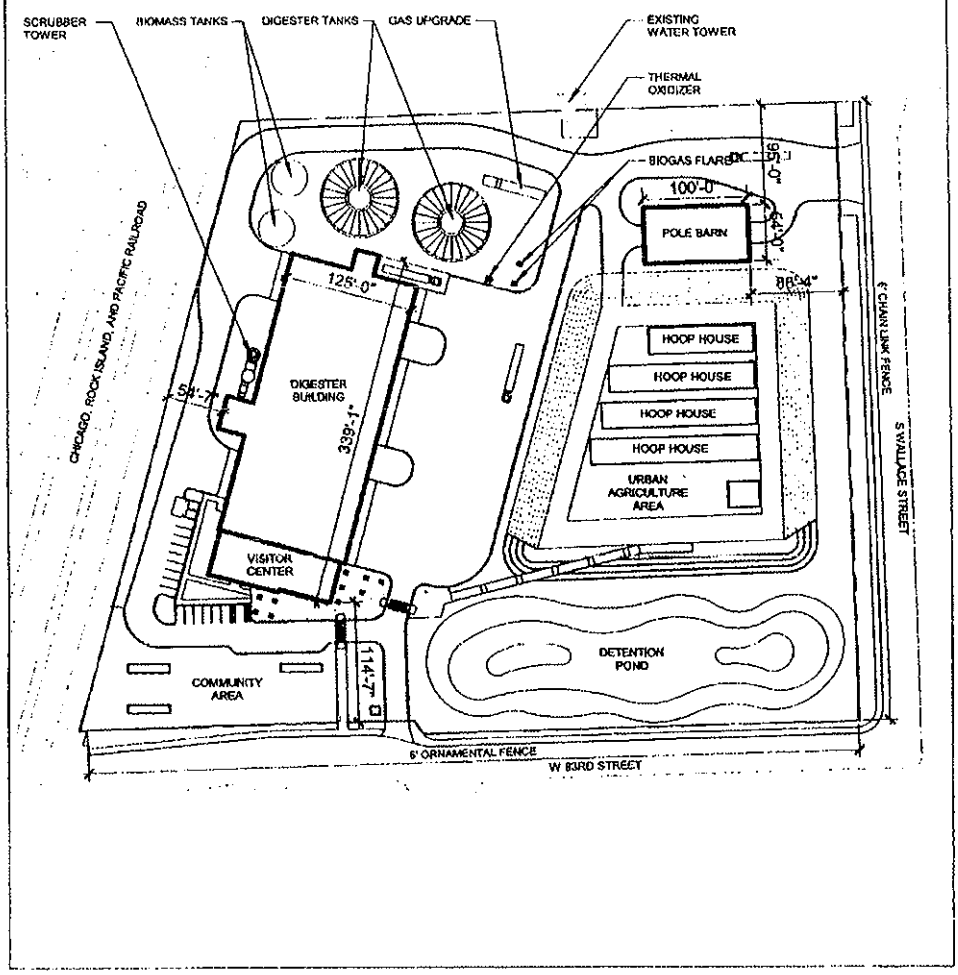

ARCHITECTURAL SITE PLAN

SCALE: 1" = 120'-0"

APPLICANT: GREEN ERA EDUCATIONAL NFP

ADDRESS: 650 W 83RD STREET CHICAGO, IL 60620
INTRODUCTION: DECEMBER 5, 2018

McBride Kelley Baurer
Architects / Planners

03

Final for Publication

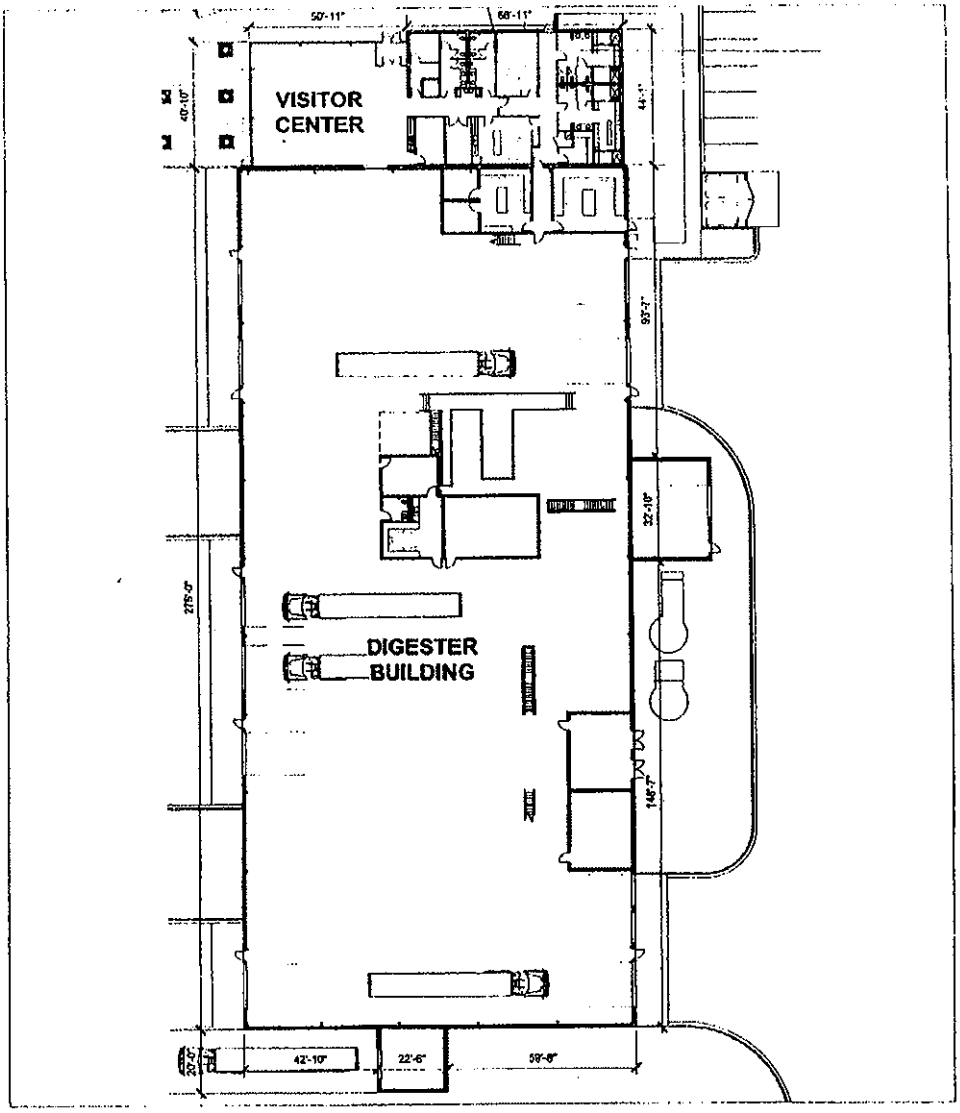

FLOOR PLAN

SCALE: 1" = 40'-0"

APPLICANT: GREEN ERA EDUCATIONAL NFP

ADDRESS: 650 W 83RD STREET CHICAGO, IL 60620
INTRODUCTION: DECEMBER 5, 2018

McBride Kelley Baurer Architects / Planners

04

Final for Publication

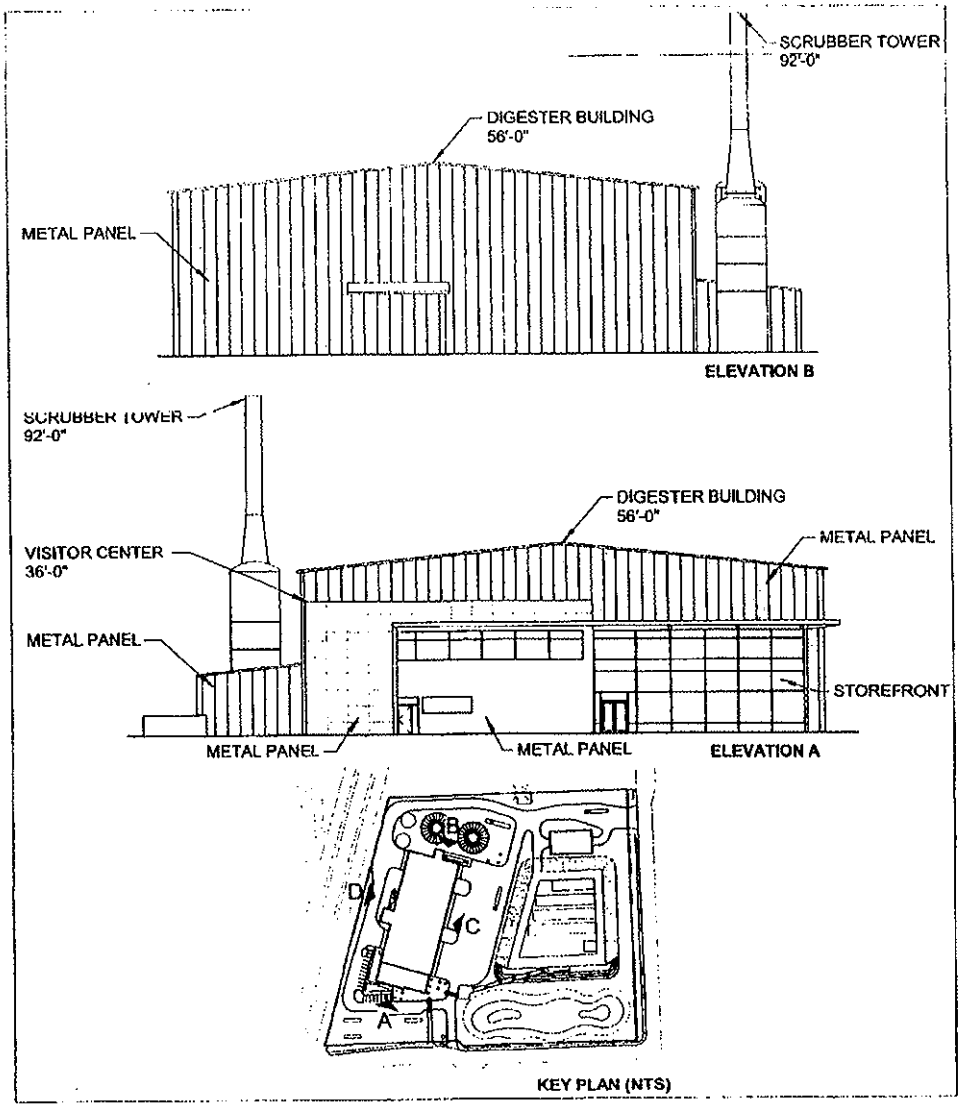

ELEVATIONS A & B

SCALE: 1" = 30'-0"

APPLICANT: GREEN ERA EDUCATIONAL NFP

ADDRESS: 650 W 83RD STREET CHICAGO, IL 60620
INTRODUCTION: DECEMBER 5, 2018

McBride Kelley Baurer
Architects / Planners

05

Final for Publication

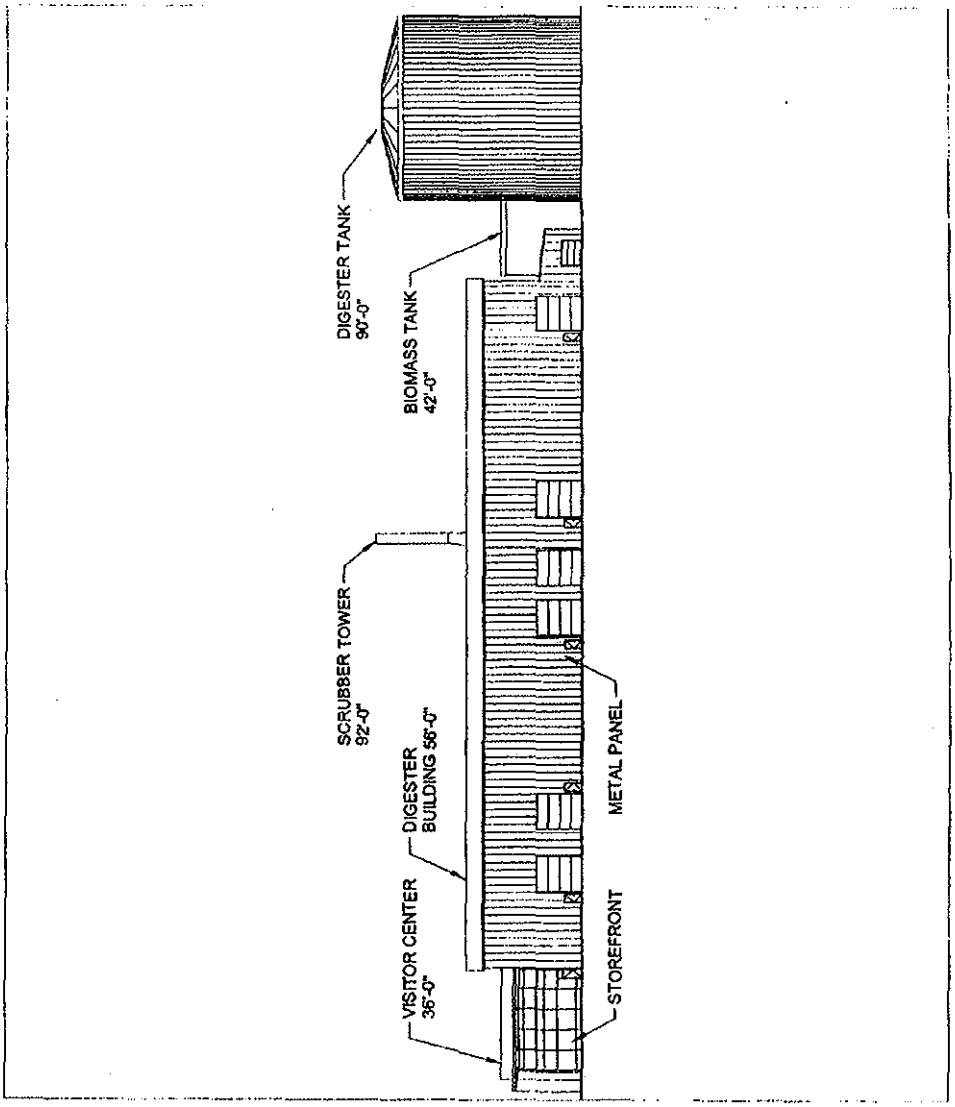

ELEVATION C

SCALE: 1" = 50'-0"

APPLICANT: GREEN ERA EDUCATIONAL NFP

ADDRESS: 650 W 83RD STREET CHICAGO, IL 60620
INTRODUCTION: DECEMBER 5, 2018

McBride Kelley Baurer
Architects / Planners

06

Final for Publication

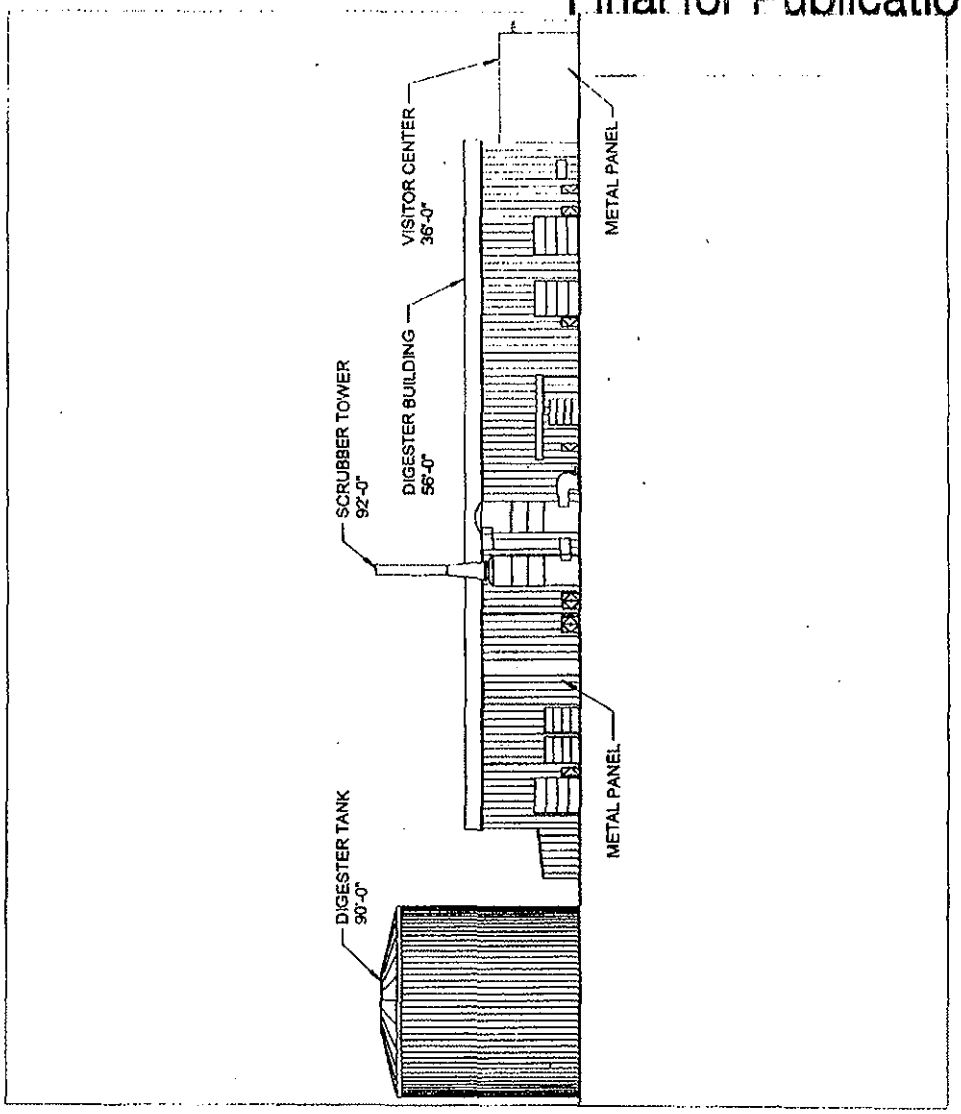

ELEVATION D

SCALE: 1" = 50'-0"

APPLICANT: GREEN ERA EDUCATIONAL NFP

ADDRESS: 650 W 83RD STREET CHICAGO, IL 60620
INTRODUCTION: DECEMBER 5, 2018

McBride Kelley Baurer
Architects / Planners

07

ATTACHMENT 6
FIGURES

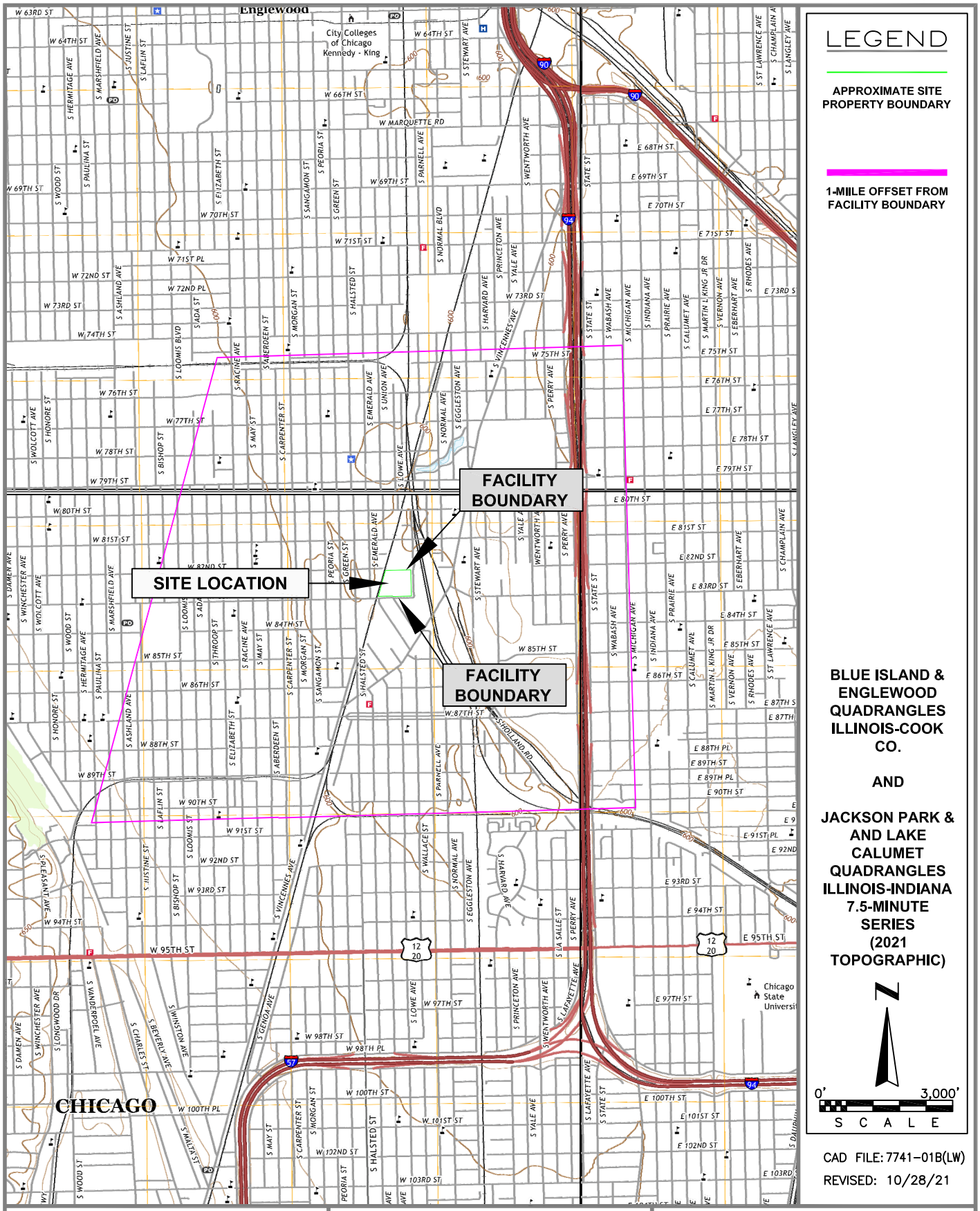

LEGEND

APPROXIMATE SITE PROPERTY BOUNDARY

1-MILE OFFSET FROM FACILITY BOUNDARY

BLUE ISLAND & ENGLEWOOD QUADRANGLES ILLINOIS-COOK CO.

AND

JACKSON PARK & AND LAKE CALUMET QUADRANGLES ILLINOIS-INDIANA 7.5-MINUTE SERIES (2021 TOPOGRAPHIC)

N

0' 3,000'

S C A L E

CAD FILE: 7741-01B(LW)

REVISED: 10/28/21

DAI ENVIRONMENTAL

GREEN ERA RENEWABLE ENERGY AND URBAN FARMING CAMPUS
650 WEST 83RD STREET
CHICAGO, ILLINOIS

FIGURE 1
SITE LOCATION MAP

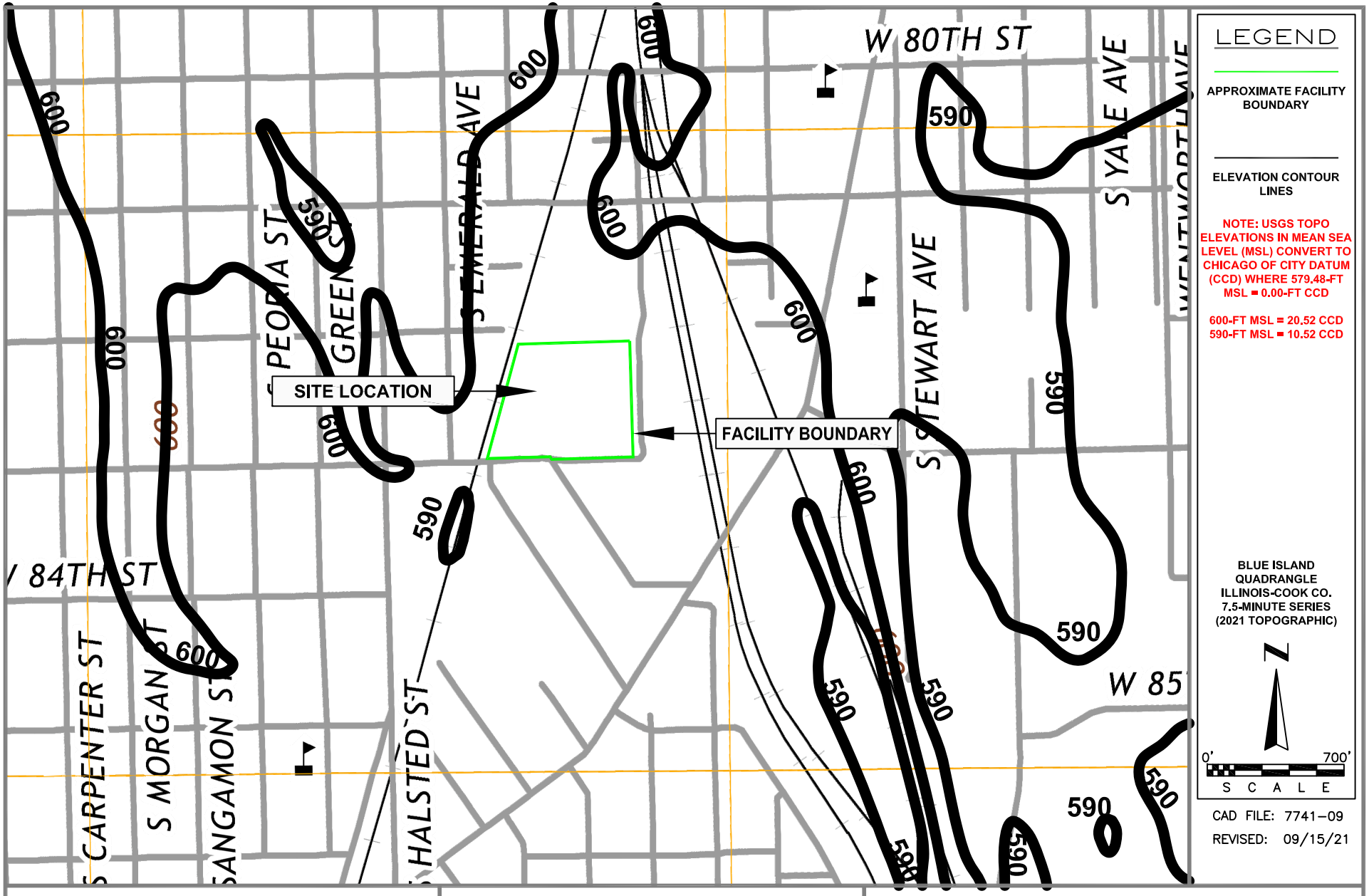

ENVIRONMENTAL

GREEN ERA RENEWABLE ENERGY
AND URBAN FARMING CAMPUS
650 WEST 83RD STREET
CHICAGO, ILLINOIS

FIGURE 1A
TOPOGRAPHIC DETAIL OF FACILITY
AND SURROUNDING AREA

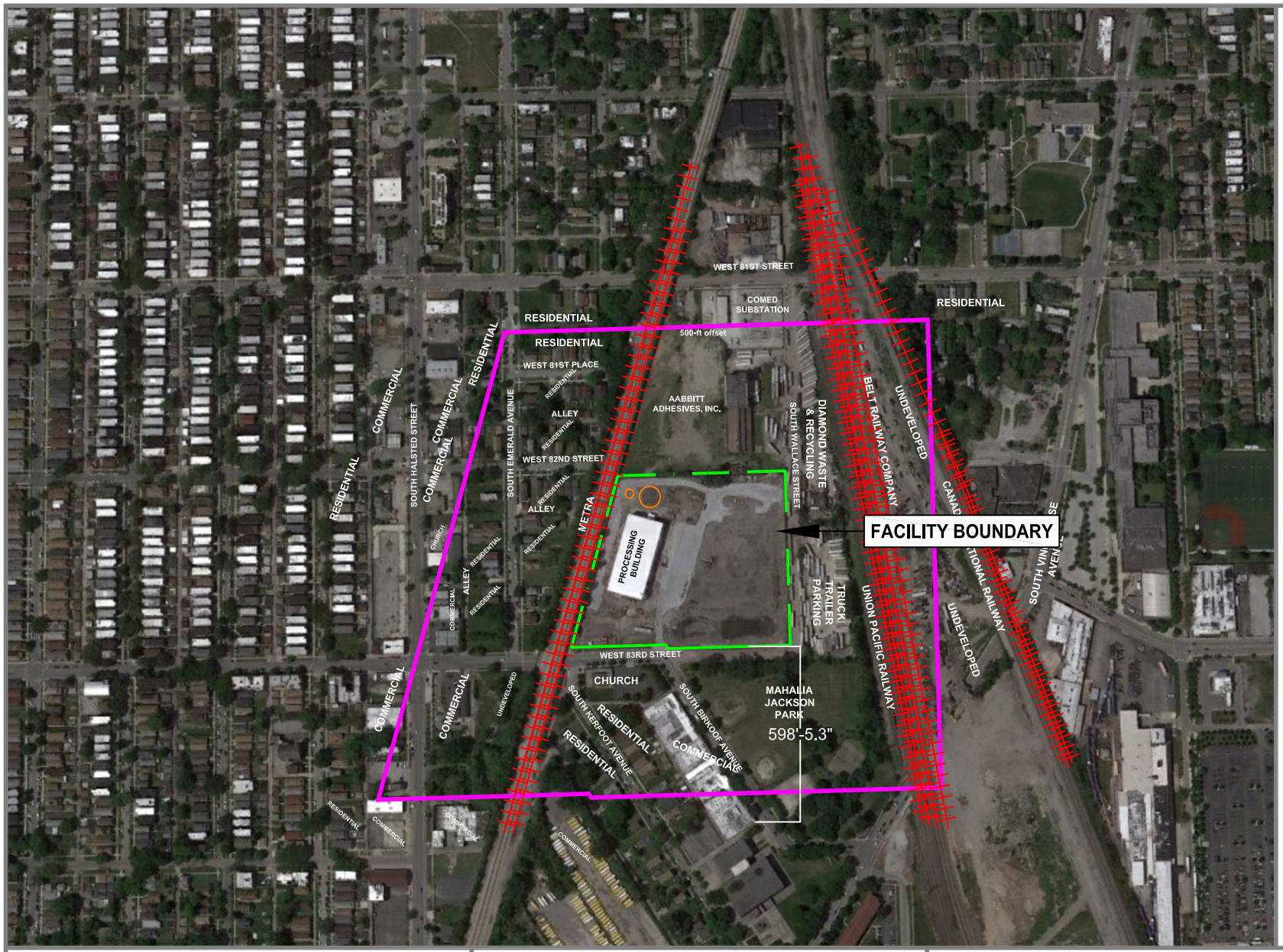

ENVIRONMENTAL DAI

GREEN ERA RENEWABLE ENERGY AND URBAN FARMING CAMPUS
650 WEST 83RD STREET
CHICAGO, ILLINOIS

FIGURE 2
AERIAL VIEW OF SITE AND SURROUNDING PROPERTY USAGE
(MAY 2021 AERIAL TAKEN GOOGLE EARTH)

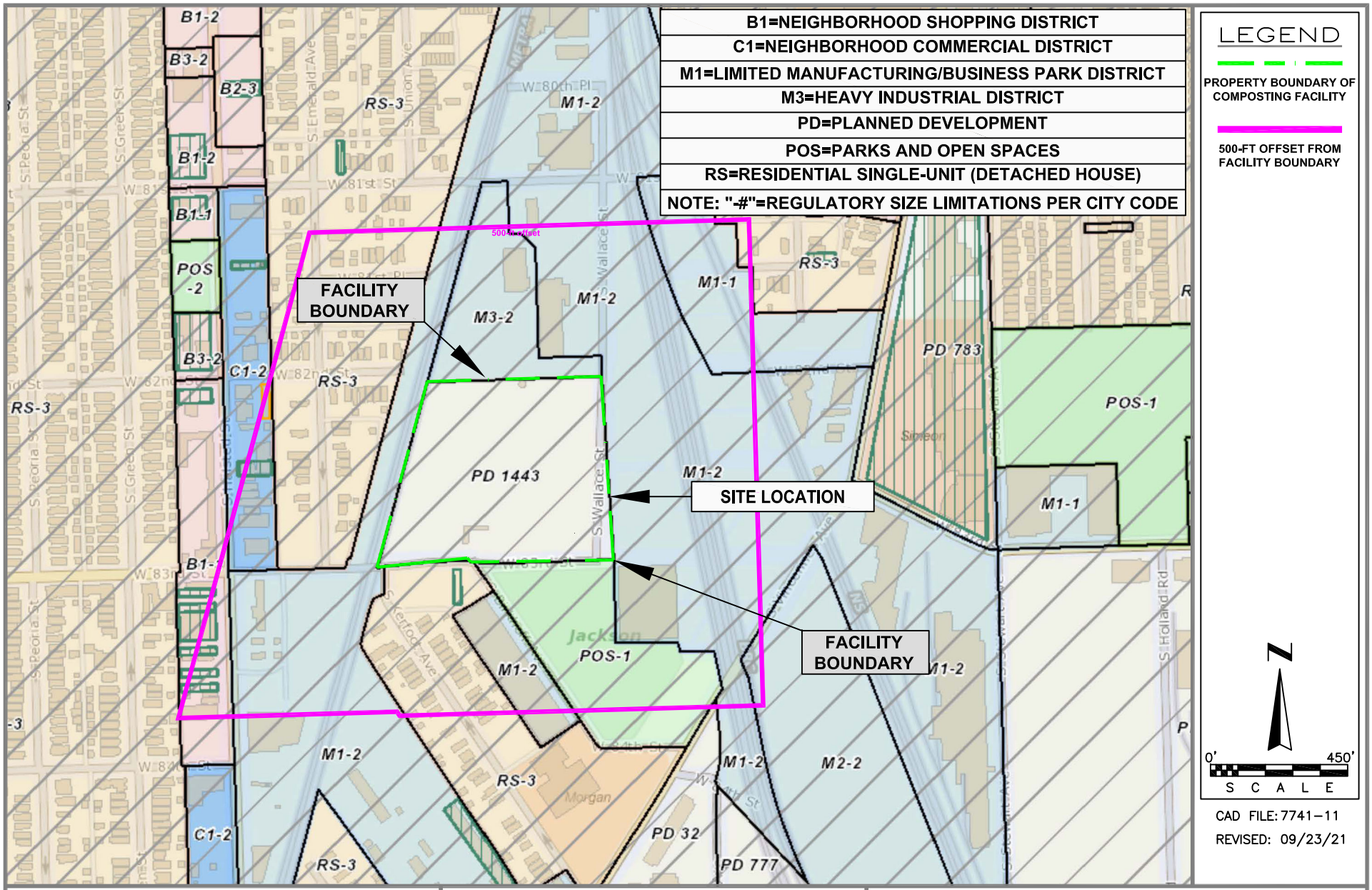

ENVIRONMENTAL DAI

GREEN ERA RENEWABLE ENERGY
AND URBAN FARMING CAMPUS
650 WEST 83RD STREET
CHICAGO, ILLINOIS

FIGURE 2A
SITE AND SURROUNDING
AREA ZONING MAP

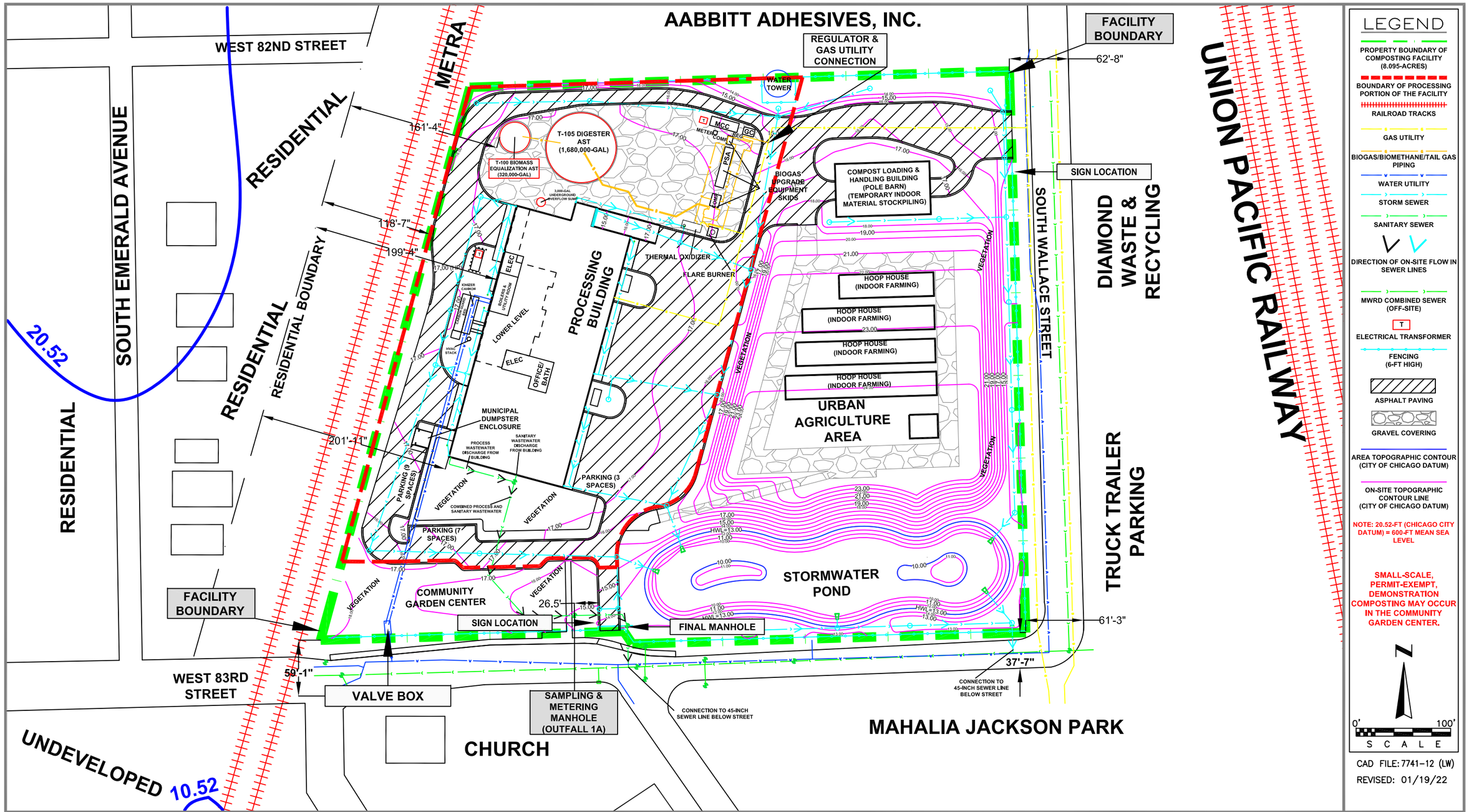

DAI ENVIRONMENTAL

GREEN ERA RENEWABLE ENERGY AND URBAN FARMING CAMPUS
650 WEST 83RD STREET
CHICAGO, ILLINOIS

FIGURE 3
SITE PLAN AND CONTOUR MAP

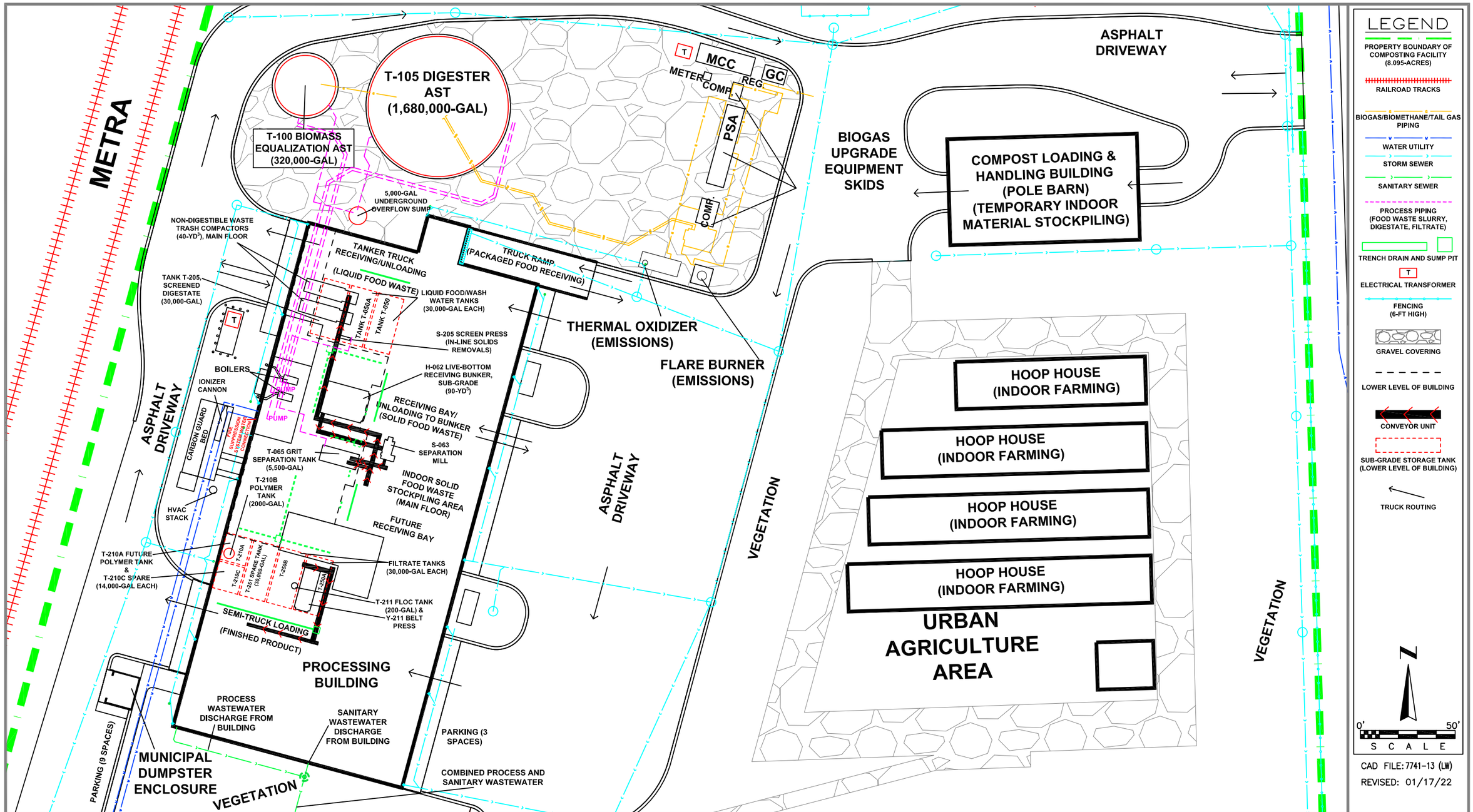

DAI ENVIRONMENTAL

GREEN ERA RENEWABLE ENERGY AND URBAN FARMING CAMPUS
650 WEST 83RD STREET
CHICAGO, ILLINOIS

FIGURE 3A
SITE DETAIL SHOWING
PROCESS OPERATIONS AND EQUIPMENT

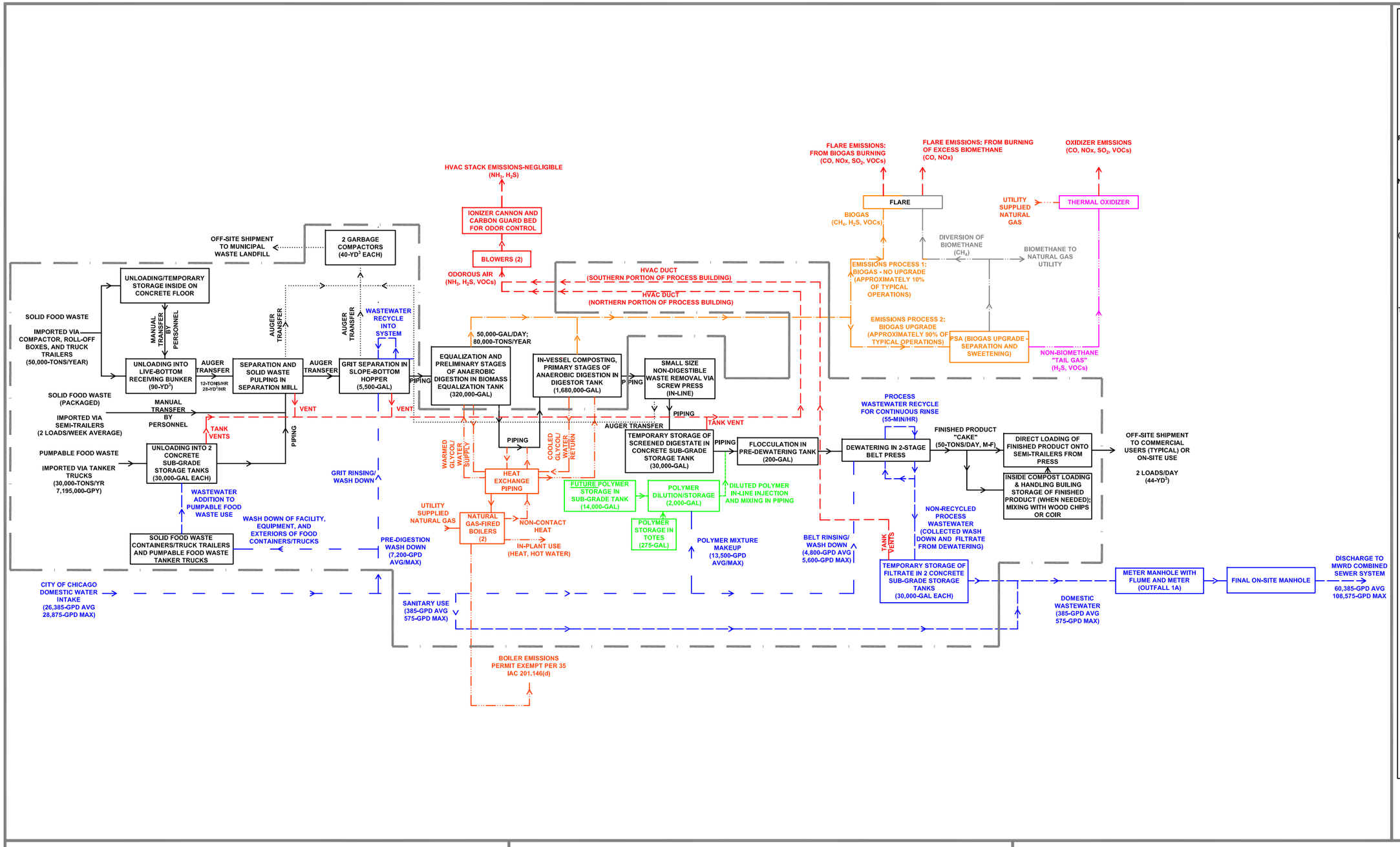

LEGEND

- FOOD WASTE ANAEROBIC DIGESTION PROCESS
- NON-DIGESTIBLE WASTE REMOVAL/OFF-SITE SHIPMENT
- IN-LINE INJECTION OF DILUTED POLYMER INTO PIPING PRIOR TO DEWATERING PROCESS (AIDS IN FLOCCULATION)
- NATURAL GAS USE/EMISSIONS & HEAT EXCHANGE OPERATIONS
- BIOGAS PRODUCTION WITH TRANSFER TO UPGRADE (TYPICAL) OR FLARE (EMERGENCY) AND ASSOCIATED EMISSIONS
- BIOMETHANE (UPGRADED BIOGAS) WITH TRANSFER TO UTILITY OR EMISSIONS VIA FLARE
- TAIL GAS (WASTE FROM BIOGAS UPGRADE) EMISSIONS VIA THERMAL OXIDIZER
- EMMISSIONS TO ATMOSPHERE
- DOMESTIC WATER USE
- WASTEWATER REUSE/DISCHARGE
- PORTIONS OF PROCESS PERFORMED INSIDE OF PROCESSING BUILDING (INDOORS)

CAD FILE: 7741-04B
REVISED: 12/13/21

DAI ENVIRONMENTAL

GREEN ERA RENEWABLE ENERGY AND URBAN FARMING CAMPUS
650 WEST 83RD STREET
CHICAGO, ILLINOIS

FIGURE 4
PROCESS FLOW DIAGRAM AND WATER USAGE/WASTEWATER DISCHARGE SCHEMATIC

ATTACHMENT 7
FULL-SCALE DRAWINGS

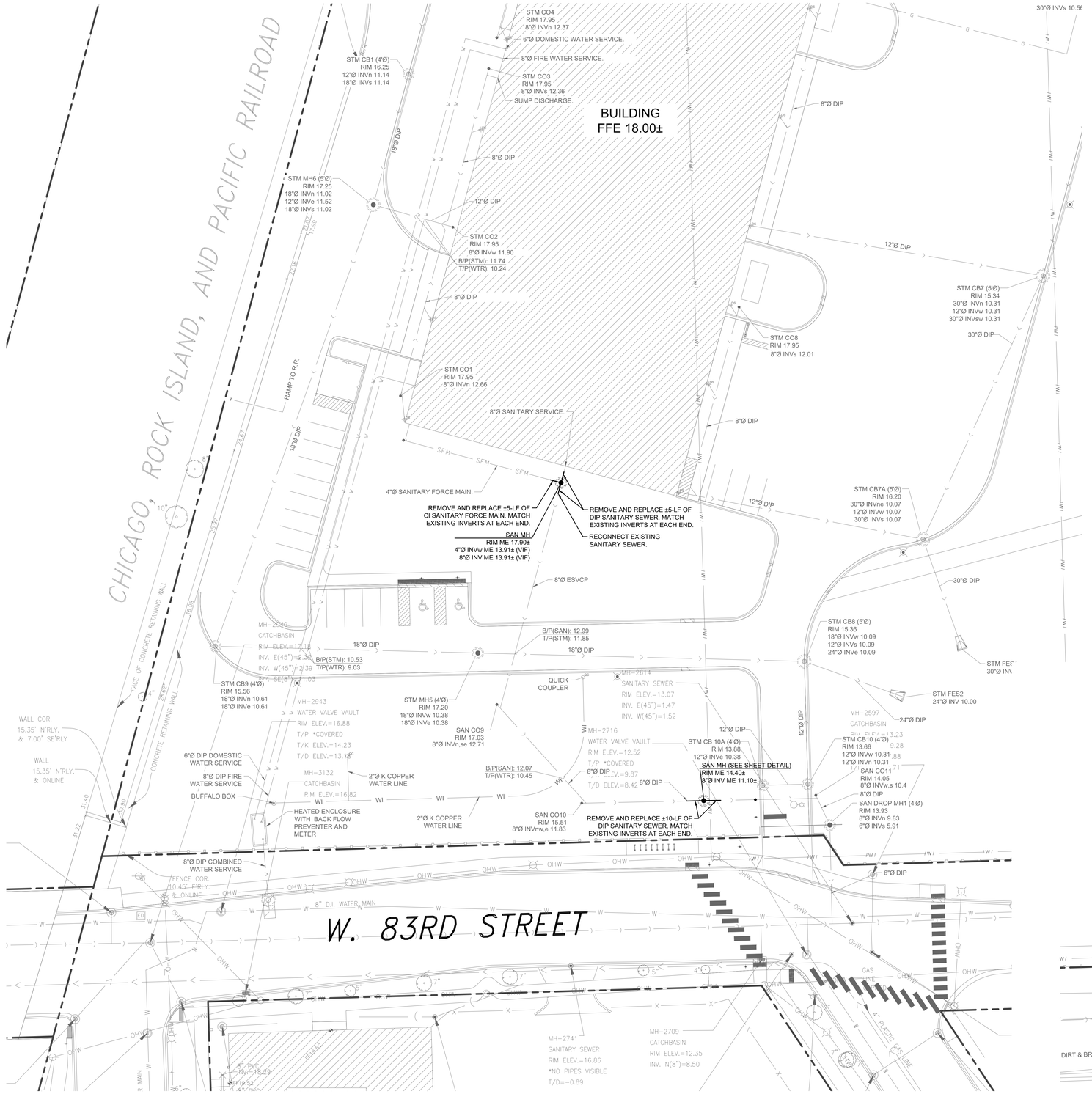

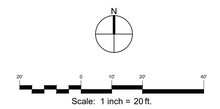

LEGEND:

- PROPERTY LINE
- EXISTING BUILDING
- SANITARY SEWER
- 4'Ø MANHOLE (MH)
- CLEAN OUT (CO)

NOTES:

1) EXISTING CONDITIONS ARE SHOWN BASED ON DESIGN FILES DATED 06/29/2021. ALL SITE CONDITIONS AS THEY PERTAIN TO THE PROJECT SCOPE SHALL BE VERIFIED IN FIELD PRIOR TO CONSTRUCTION. FINDINGS TO BE REPORTED TO EOR/AOR.

2) SANITARY FORCE MAIN SHALL BE 18" BELOW BOTTOM OF PIPE ELEVATION OF EXISTING WATER SERVICE WHEN 10' OF HORIZONTAL SEPARATION IS NOT ACHIEVABLE.

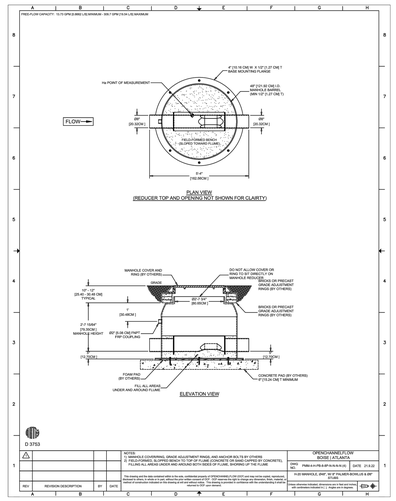

DTL MANHOLE DETAIL

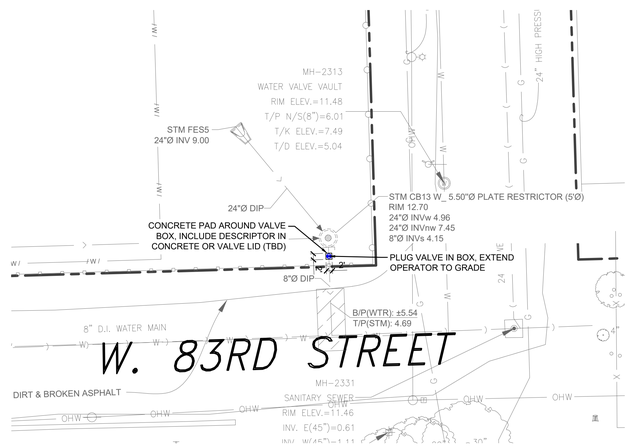

1 PLUG VALVE AT BASIN OUTLET DETAIL
SCALE: 1" = 20'

GREEN ERA DIGESTER
- FORCEMAIN
650 WEST 83RD Street
Chicago, IL. 60620

Client

GREEN ERA
EDUCATIONAL NFP
GREEN ERA
SUSTAINABILITY, LLC
650 WEST 83RD Street
Chicago, IL. 60620

Project Team

CIVIL ENGINEER/LANDSCAPE ARCHITECT
TERRA ENGINEERING LTD.
225 W Ohio Street - Suite 400; Chicago, IL 60654
(T) 312-467-0123 | (F) 312-467-0220

Revisions

Date	Issue
10/15/2021	UTILITY ROUTING

Stamp

Title

SITE UTILITY PLAN

Sheet No.

C1.0

TERRA Project No. 15-194-005

Oct 15, 2021 - 11:53am
M:_2015\15-194-001 Green Era Digester_15-194-005 Green Era Digester - Forcemain\Design\Site\Drawings\C1.0 Site Utility Plan.dwg
Adobe PDF

N

Scale: 1 inch = 20ft.

LEGEND:

- PROPERTY LINE
- OF / ELEV. — OVERFLOW ELEVATION
- TC XX.XX / FL XX.XX — TOP OF CURB ELEVATION / FLOW LINE ELEVATION
- XX.XX — SPOT ELEVATION
- 1.0% — SLOPE ARROW
- ME — MATCH EXISTING
- HWL — HIGH WATER LEVEL
- CCD — CHICAGO CITY DATUM
- FFE — FINISHED FLOOR ELEVATION
- AR — ADJUST RIM
- 100 YEAR HIGH WATER LEVEL
- 10 — MAJOR CONTOUR
- 9 — MINOR CONTOUR
- TRENCH DRAIN
- FLARED END SECTION (FES)
- 4'Ø CATCH BASIN (CB)
- 5'Ø CATCH BASIN (CB)
- 4'Ø MANHOLE (MH)
- 5'Ø MANHOLE (MH)
- T/WALL XX.XX / B/WALL XX.XX — TOP OF WALL ELEVATION / BOTTOM OF WALL ELEVATION

PR. BUILDING FFE18.00

PR. DIGESTER FFE17.25

PR. DIGESTER FFE17.50

PR. POLE BARN FFE17.75

PROPOSED DETENTION POND HWL=13.00

W. 83RD STREET

S. WALLACE

CHICAGO, ROCK ISLAND, AND PACIFIC RAILROAD

MKB Architects
ARCHITECTS/PLANNERS
1918 NORTH MENDELL STREET
SUITE 300
CHICAGO, ILLINOIS 60642
P. 773.235.3800
F. 773.235.3833

TERRA ENGINEERING LTD.
CIVIL ENGINEER/LANDSCAPE ARCHITECT
225 West Ohio Street
Suite 400
Chicago, Illinois 60654
P. 312.467.0123
F. 312.467.0220

REV	DATE	ISSUE
	10/5/20	ISSUED FOR CONSTRUCTION
	05/29/20	ISSUED FOR PERMIT
	01/07/20	ISSUED FOR BID
	01/25/19	ISSUE FOR REVIEW
	11/8/18	ISSUE FOR PRICING

GREEN ERA EDUCATIONAL NFP
GREEN ERA SUSTAINABILITY, LLC

650 WEST 83RD STREET
CHICAGO, IL 60620

I HEREBY CERTIFY THAT THIS PLAN, SPECIFICATION, OR REPORT WAS PREPARED BY ME OR UNDER MY DIRECT SUPERVISION AND THAT I AM A DULY REGISTERED LANDSCAPE ARCHITECT UNDER THE LAWS OF THE STATE OF ILLINOIS

EXP. DATE: 08/31/2021 REGISTRATION NO. 157-000150

DRAWN BY: MJC/SJL
CHECKED BY: CAM/SJL
APPROVED: CAM/JBS/KLG
SCALE: 1"=20'

©2018

JOB NO. 15-194-002

SITE GRADING PLAN C3.0

Scale: 1 inch = 20ft.

LEGEND:

- PROPERTY LINE
- RESTORE PER CITY REQUIREMENTS. AREA SHOWN SCHEMATIC ONLY.
- STORM SEWER
- SANITARY SEWER
- WATER SERVICE
- WI — WATER IRRIGATION LINE
- TRENCH DRAIN
- WATER VALVE IN BASIN (WVB)
- FLARED END SECTION (FES)
- DOWNSPOUT (DS)
- 4'Ø CATCH BASIN (CB)
- 5'Ø CATCH BASIN (CB)
- 4'Ø MANHOLE (MH)
- 5'Ø MANHOLE (MH)
- CLEAN OUT (CO)
- RESTRICTOR (REST)
- BACKFLOW PREVENTER
- QC — QUICK COUPLER (QC)

NOTES:

1. COORDINATE WITH MEP ENGINEER FOR NATURAL GAS, ELECTRICAL POWER, AND LOW VOLTAGE ROUTING.
2. A REPRESENTATIVE OF THE DWM MUST BE PRESENT DURING THE EXCAVATION AND INSTALLATION NEAR THE EXISTING 8" WATER MAIN. IT IS REQUIRED THAT THE FORCE ACCOUNT CONSTRUCTION MANAGER BE CONTACTED AT FACM@CTRWATER.NET TWO WEEKS PRIOR TO THE ANTICIPATED CONSTRUCTION DATE SO A RESIDENT ENGINEER CAN BE ASSIGNED TO THE PROJECT. THE DWM REPRESENTATIVE WILL ADHERE TO THE SCHEDULE PROVIDED BY TERRA ENGINEERING, UNLESS NOTIFIED OTHERWISE. FAILURE TO COMPLY WITH THIS REQUIREMENT MAY RESULT IN ADDITIONAL EXPENSES TO THE PROPOSED PROJECT TO VERIFY THAT ALL WORK CONFORMS TO DWM'S STANDARDS.
3. HAND EXCAVATION IS REQUIRED TO FIELD VERIFY THE HORIZONTAL AND VERTICAL LOCATION OF THE 8" WATER MAIN PRIOR TO CROSSING. IF A TRENCHLESS METHOD OF INSTALLATION IS USED, A MINIMUM 4' OF UNDISTURBED SOIL IS TO REMAIN ON EITHER SIDE OF THE EXISTING WATER MAIN. IF THE PROPOSED FACILITY WILL BE INSTALLED VIA OPEN-CUT METHOD, THE EXCAVATION MUST BE PROPERLY SHORED TO MAINTAIN A MAXUMUM 3' TRENCH WIDTH. THE TRENCH SHALL BE BACKFILLED TO THE SPRINGLINE OF THE WATER MAIN WITH CLSM BACKFILL (NON-FLY ASH) AND CA-16 FROM THE SPRINGLINE OF THE WATER MAIN TO GRADE. USE OF POLYETHYLENE WRAP AS A BOND BREAKER BETWEEN THE WATER MAIN AND THE CLSM BACKFILL IS REQUIRED.
4. UTILITY CONNECTIONS AND UTILITY STRUCTURES ARE NOT PART OF THIS OUC SUBMITTAL OR GEOTECHNICAL REVIEW UNDER THE DOB. A SEPARATE SUBMITTAL OF ALL UTILITY CONNECTIONS AND STRUCTURES AS PER CDOT REQUIREMENTS TO BE CONDUCTED DIRECTLY BETWEEN THE APPLICANT AND OUC OF CDOT.

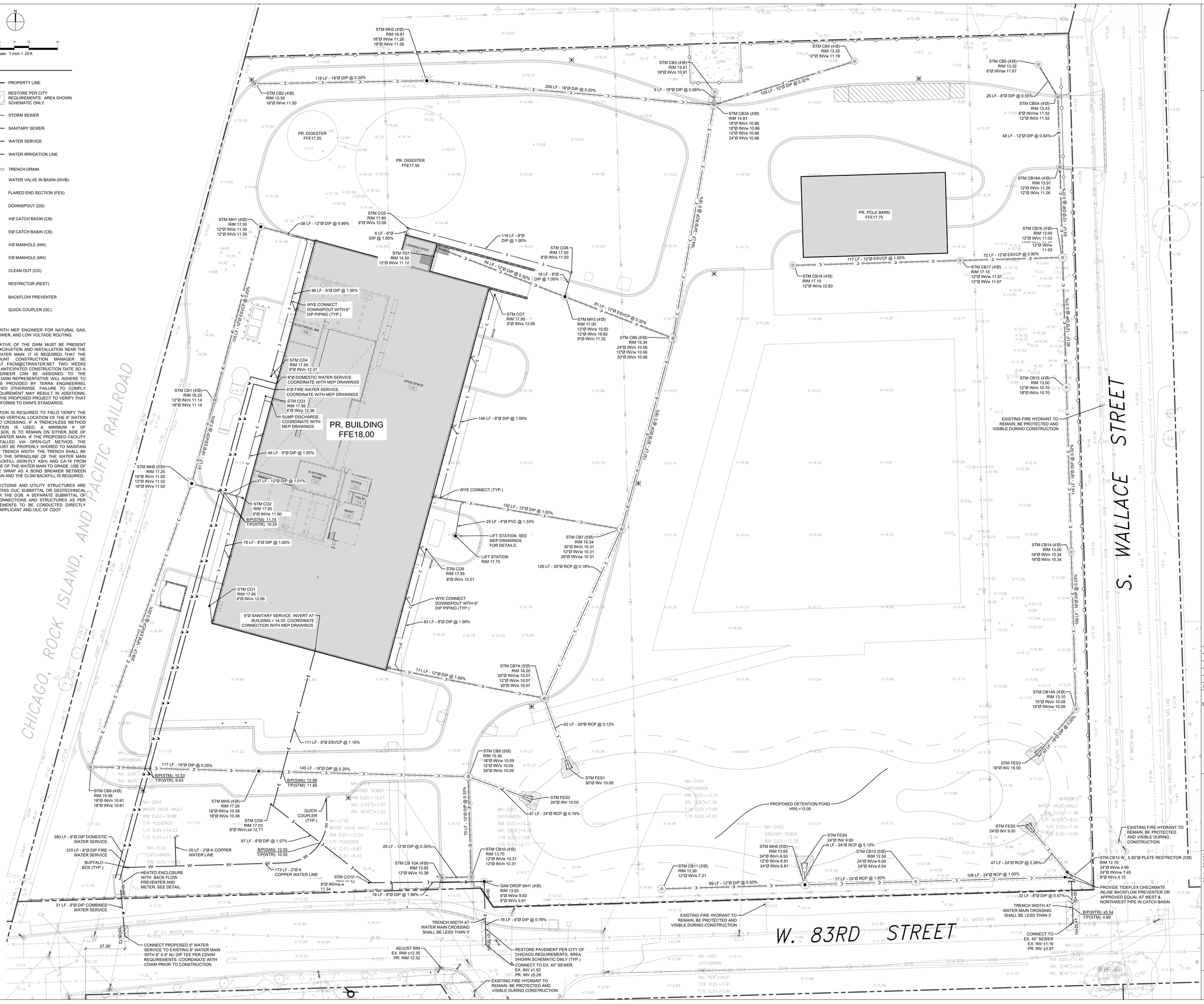

MKB Architects
ARCHITECTS/PLANNERS
1918 NORTH MENDELL STREET
SUITE 300
CHICAGO, ILLINOIS 60642
P. 773.235.3800
F. 773.235.3833

TERRA ENGINEERING LTD.
CIVIL ENGINEER/LANDSCAPE ARCHITECT
225 West Ohio Street
Suite 400
Chicago, Illinois 60654
P. 312.467.0123
F. 312.467.0220

REV	DATE	ISSUE
	10/5/20	ISSUED FOR CONSTRUCTION
	05/29/20	ISSUED FOR PERMIT
	01/07/20	ISSUED FOR BID
	01/25/19	ISSUE FOR REVIEW
	11/8/18	ISSUE FOR PRICING

GREEN ERA EDUCATIONAL NFP
GREEN ERA SUSTAINABILITY, LLC

650 WEST 83RD STREET
CHICAGO, IL 60620

I HEREBY CERTIFY THAT THIS PLAN, SPECIFICATION, OR REPORT WAS PREPARED BY ME OR UNDER MY DIRECT SUPERVISION AND THAT I AM A DULY REGISTERED LANDSCAPE ARCHITECT UNDER THE LAWS OF THE STATE OF ILLINOIS

EXP. DATE: 08/31/2021 REGISTRATION NO. 157-000150

DRAWN BY: MJC/SJL
CHECKED BY: CAM/SJL
APPROVED: CAM/JBS/KLG
SCALE: 1"=20'

©2018

JOB NO. 15-194-002

SITE UTILITY PLAN
C4.0

GENERAL NOTES

DESIGN:

1. BUILDING CODE – CITY OF CHICAGO BUILDING CODE: 2018 EDITION (OLD EDITION) (D)
2. DESIGN WIND LOADS
   WIND PRESSURE (MAIN BUILDING) – 20 PSF
   WIND PRESSURE (CLADDING U.N.O.) –25 PSF
   WIND PRESSURE (CLADDING, CORNERS) – 30 PSF
3. SEISMIC LOAD – NOT APPLICABLE

FOUNDATIONS – GENERAL:

1. THE FOUNDATION HAS BEEN DESIGNED IN ACCORDANCE WITH THE RECOMMENDATIONS MADE IN THE SOILS REPORT MR175403R1 DATED 10/22/18, AND ADDENDUM MR175403.03 DATED 06/30/2020, BY TERRACON CONSULTANTS, INC.
2. ALL BEARING MATERIAL SHALL BE INSPECTED BY THE INDEPENDENT TESTING AGENCY PRIOR TO CONCRETE PLACEMENT. THE INDEPENDENT TESTING AGENCY SHALL BE THE SOLE JUDGE AS TO THE SUITABILITY OF THE BEARING MATERIAL. FOOTING ELEVATIONS SHALL BE ADJUSTED AS REQUIRED. (D)
3. ALL BEARING MATERIALS SHALL BE INSPECTED BY INDEPENDENT TESTING AGENCY PRIOR TO CONCRETE PLACING. THE INDEPENDENT TESTING AGENCY SHALL BE SOLE JUDGE AS TO THE SUITABILITY OF THE OF THE BEARING MATERIAL. FOOTING ELEVATIONS SHALL BE ADJUSTED AS REQUIRED.
4. BOTTOM OF EXTERIOR FOOTINGS SHALL BEAR A MINIMUM OF 42 INCHES BELOW FINAL GRADE.
5. FOUNDATION WALLS THAT RETAIN EARTH SHALL BE BRACED AGAINST BACKFILLING PRESSURES UNTIL FLOOR SLABS AT TOP AND BOTTOM ARE IN PLACE.
6. WHERE FOUNDATION WALLS ARE TO HAVE EARTH PLACED ON EACH SIDE, PLACE FILL SIMULTANEOUSLY SO AS TO MAINTAIN A COMMON ELEVATION ON EACH SIDE OF THE WALL.
7. EXISTING FILL SHOULD NOT CARRY PRESSURE EXCEEDING 500 PSF.
8. THE SOIL ALLOWABLE BEARING CAPACITY AND POTENTIAL SETTLEMENT OF THE PROPOSED FOUNDATION AS AFFECTED BY THE PROPOSED STRUCTURE AND AS REPORTED BY THE GEOTECHNICAL ENGINEER IS CONSIDERED IN THE STRUCTURAL DESIGN.
9. DEEP FOUNDATIONS HAVE BEEN DESIGNED TO SUSTAIN A LATERAL FORCE OF 6 KIPS/PILE.

CONCRETE AND REINFORCING STEEL:

1. CONCRETE SHALL CONFORM TO ACI BUILDING CODE (318R–14) AND SHALL HAVE A 28–DAY COMPRESSIVE STRENGTH AND DENSITY, IN ACCORDANCE WITH THE FOLLOWING: (D)

	STRENGTH PSI	DENSITY PCF	MAX W/C RATIO
INTERIOR SLABS, EXTERIOR SLABS	4000	145	0.45
CURBS, SIDEWALKS	5000	145	0.50
ALL OTHER CONCRETE (U.N.O.)	3000	145	0.55

2. AIR ENTRAINMENT FOR EXTERIOR SLABS SHALL CONFORM TO TABLE 19.3.3.1 OF ACI 318–14, SEVERE EXPOSURE.
3. REINFORCING SHALL CONFORM TO ASTM A615, GRADE 60, UNLESS NOTED OTHERWISE.
4. WELDED WIRE FABRIC SHALL CONFORM TO ASTM A185.
5. MINIMUM CONCRETE COVER, UNLESS NOTED OTHERWISE:

UNFORMED SURFACE IN CONTACT WITH THE GROUND.	3 IN.
FORMED SURFACES EXPOSED TO EARTH OR WEATHER.	
#6 BARS AND LARGER	2 IN.
#5 BARS AND SMALLER	1–1/2 IN.
FORMED SURFACES NOT EXPOSED TO EARTH OR WEATHER:	
BEAMS, GIRDERS, AND COLUMNS	1–1/2 IN.
SLABS, WALLS, AND JOISTS	
#11 BARS AND SMALLER	3/4 IN.
#14 AND #18 BARS	1–1/2 IN.

6. LAP SPLICES SHALL BE IN ACCORDANCE WITH THE FOLLOWING TABLE, UNLESS NOTED OTHERWISE. WHERE CLASSES ARE NOT CALLED OUT ON DRAWINGS, USE CLASS "B" SPLICES. SPLICES SHALL BE STAGGERED AT LEAST 24 INCHES.

BAR SIZE	TENSION SPLICES (INCHES) TOP BARS A	TOP BARS B	OTHER BARS A	OTHER BARS B	COMPRESSION SPLICES (INCHES)
#3	16	21	12	16	12
#4	21	28	16	21	15
#5	27	35	21	27	19
#6	35	46	27	35	23
#7	48	62	37	48	26
#8	63	82	48	63	30
#9	80	104	61	80	34
#10	101	131	78	101	38
#11	125	162	96	125	42

COMPRESSION DOWEL EMBEDMENT: 22 BAR DIAMETERS
LAP WELDED WIRE FABRIC ONE SPACING OF CROSS WIRES PLUS 2".

7. BASE PLATES, ANCHOR BOLTS, SUPPORT ANGLES, ETC., BELOW GRADE SHALL BE COVERED WITH A MINIMUM OF 3" OF CONCRETE.
8. CONCRETE COATINGS
   A. INTERIOR CONCRETE SURFACES INCLUDING BUILDING FLOOR SLABS AND HOUSEKEEPING PADS TO BE COATED WITH ACRYLIC CLEAR SEALING COMPOUND COMPLYING WITH ASTM C309 TYPE 1 AND CONTAINING NOT MORE THAN 30 PERCENT SOLIDS.
      1. STANDARDS OF ACCEPTANCE:
         a. L&M CONSTRUCTION CHEMICALS, INC. DRESS AND SEAL WB NO. 30.
         b. EUCLID CHEMICAL CO. SUPER DIAMOND CLEAR VOX.
   B. CONCRETE TANK INTERIOR SURFACES : PETROLEUM–RESISTANT HIGH–BUILD COAL–TAR EPOXY–RESIN COATING.

METAL ROOF DECK:

1. METAL ROOF DECK SHALL COMPLY WITH THE REQUIREMENTS OF THE STEEL DECK INSTITUTE "SPECIFICATIONS AND COMMENTARY FOR STEEL ROOF DECK" (LATEST).
2. METAL ROOF DECK SHALL BE CONFIGURATION, DEPTH AND MINIMUM GAGE AS SHOWN ON THE DRAWINGS. MINIMUM YIELD STRENGTH SHALL BE 33,000 psi. ATTACHMENT TO THE SUPPORTING STRUCTURE SHALL BE AS SHOWN ON THE DRAWINGS. SEE ROOF PLAN NOTES.
3. STEEL ROOF DECK AND CONNECTORS SHALL CONFORM TO FACTORY MUTUAL PUBLICATION I–28 AND I–28S, CLASS I–90, WINDSTORM RESISTANCE. INSTALLATION SHALL BE BY AN OSHA CERTIFIED OPERATOR IN ACCORDANCE WITH THE FASTENER MANUFACTURER'S INSTRUCTIONS AND INITIAL FASTENING UNDER THE SUPERVISION OF THE MANUFACTURER'S REPRESENTATIVE. STEEL ROOF DECK SHALL BE ATTACHED AS FOLLOWS:
   AT SUPPORTS: 5/8" DIAMETER WELDS.
   AT SIDELAPS: BUILDEX TRAXX #10–14 STANDARD HEX WASHER HEAD SCREWS.
4. DO NOT HANG OR SUPPORT ANY LOADS FROM METAL ROOF DECK.
5. METAL ROOF DECK SHALL BE CONTINUOUS OVER A MINIMUM OF THREE SPANS.

REINFORCED MASONRY: (D)

1. MASONRY CONSTRUCTION SHALL CONFORM TO THE REQUIREMENTS OF THE CURRENT VERSIONS OF ACI 530 "BUILDING CODE REQUIREMENTS FOR MASONRY STRUCTURES" AND ACI 530.1 "SPECIFICATIONS FOR MASONRY STRUCTURES".
2. REINFORCED MASONRY SHALL HAVE A MINIMUM COMPRESSIVE STRENGTH, f'm, OF 1500 PSI. MASONRY UNITS SHALL BE NORMAL WEIGHT BLOCK CONFORMING TO ASTM C90, GRADE N, TYPE 1, AND SHALL HAVE A MINIMUM NET AREA COMPRESSIVE STRENGTH OF 1900 PSI. MORTAR SHALL CONFORM TO ASTM C270, TYPE S, U.N. AND TYPE N FOR INTERIOR WALLS. GROUT SHALL CONFORM TO ASTM C476. GROUT SHALL HAVE A MINIMUM 28 DAY COMPRESSIVE STRENGTH OF 2000 psi AND MAXIMUM DENSITY OF 115 pcf. SLUMP AT POINT OF PLACEMENT SHALL BE 9" +/– 1".
3. REINFORCING BARS SHALL CONFORM TO ASTM A615, GRADE 60, UNLESS NOTED OTHERWISE.
4. CONTINUOUS WIRE REINFORCING (JOINT REINFORCING) SHALL BE GALVANIZED TRUSS OR LADDER TYPE FORMED FROM 9 GAUGE COLD – DRAWN STEEL WIRE COMPLYING WITH ASTM A82. JOINT REINFORCING SHALL BE SPACED AT 16" O.C. VERTICALLY IN ALL MASONRY WALLS.
5. SEE DRAWINGS FOR LOCATIONS OF VERTICAL CONTROL JOINTS. HORIZONTAL BOND BEAM AND LINTEL REINFORCING SHALL BE CONTINUOUS ACROSS VERTICAL CONTROL JOINTS. JOINT REINFORCING SHALL BE STOPPED EITHER SIDE OF VERTICAL CONTROL JOINTS.
6. ALL REINFORCED CELLS, ALL CELLS BELOW GRADE AND ALL CELLS BELOW FINISH FLOOR SHALL BE GROUTED SOLID.
7. WHEN A FOUNDATION DOWEL DOES NOT LINE UP WITH A VERTICAL BLOCK CORE, IT SHALL NOT BE SLOPED MORE THAN ONE HORIZONTAL IN 6 VERTICAL. DOWELS MAY BE GROUTED INTO A CELL IN VERTICAL ALIGNMENT, EVEN THOUGH IT IS IN AN ADJACENT CELL TO THE VERTICAL WALL REINFORCING.
8. REINFORCING STEEL SHALL BE SECURED IN PLACE BEFORE GROUTING STARTS.
9. SPLICED REINFORCING SHALL BE LAPPED 48 BAR DIAMETERS OR 24 INCHES, WHICHEVER IS GREATER. SPLICED BARS SHALL BE WIRED TOGETHER.
10. VERTICAL BARS SHALL BE HELD IN POSITION AT TOP AND BOTTOM AND AT INTERVALS NOT EXCEEDING 200 DIAMETERS OF THE REINFORCING, NOR 10 FEET. BARS SHALL BE IN PLACE PRIOR TO GROUTING.
11. VERTICAL REINFORCING BARS SHALL HAVE A MINIMUM CLEARANCE OF 1/4 OF AN INCH FROM THE MASONRY FOR FINE GROUT AND 1/2 INCH FOR COARSE GROUT.
12. VERTICAL CELLS THAT WILL BE GROUTED SHALL HAVE A VERTICAL ALIGNMENT TO MAINTAIN A CONTINUOUS UNOBSTRUCTED CELL AREA NOT LESS THAN 3"x4".
13. GROUTING SHALL BE STOPPED 1–1/2" BELOW THE TOP OF A COURSE SO AS TO FORM A KEY AT THE POUR JOINT.
14. GROUTING OF MASONRY BEAMS OVER OPENINGS SHALL BE DONE IN ONE CONTINUOUS OPERATION.
15. ALL BOLTS, ANCHORS, ETC., INSERTED IN THE WALLS, SHALL BE GROUTED SOLID INTO POSITION.

STRUCTURAL STEEL:

1. STEEL SHALL CONFORM TO THE FOLLOWING GRADES:

ALL CHANNELS, ANGLES, PLATES, ETC. (UNO)	A36 (Fy=36)
WF BEAMS	A992 (Fy=50) U.N.
STRUCTURAL TUBE	A500 (Fy=46)
STEEL PIPE	A53 (Fy=35)
ANCHOR BOLTS	A307
BOLTS	A325
WELDING ELECTRODES	E70XX
THREADED ROD ANCHORS	A36
SHEAR STUDS	A108

2. ALL STRUCTURAL STEEL SHALL BE DETAILED, FABRICATED AND ERECTED IN ACCORDANCE WITH THE AISC CODE OF STANDARD PRACTICE (2010), EXCEPT AS MODIFIED IN THESE NOTES AND THE PROJECT SPECIFICATIONS.
3. THE STEEL STRUCTURE IS LATERAL UNSTABLE AND IS DEPENDENT UPON DIAPHRAGM ACTION OF THE METAL ROOF DECK AND ATTACHMENT TO THE WALL SYSTEM FOR STABILITY AND FOR RESISTANCE TO WIND AND SEISMIC FORCES. PROVIDE ALL TEMPORARY SUPPORTS REQUIRED FOR STABILITY AND FOR RESISTANCE TO WIND AND SEISMIC FORCES UNTIL THESE ELEMENTS ARE FULLY SECURED TO EACH OTHERB AND CAPABLE OF PROVIDING THIS SUPPORT. (D)
4. THE FABRICATOR IS RESPONSIBLE FOR THE DESIGN OF ALL CONNECTIONS. CONNECTIONS SHOWN ON THE STRUCTURAL DRAWINGS ARE SCHEMATIC AND ARE ONLY INTENDED TO SHOW THE RELATIONSHIP OF MEMBERS CONNECTED. CONNECTION DETAILS INDICATED ON THE DRAWINGS SHALL BE INCORPORATED INTO FABRICATOR'S CONNECTION DESIGN. SEE SPECIFICATIONS. ALL SHOP DRAWINGS SHALL BE SIGNED AND SEALED BY THE FABRICATOR'S ENGINEER WITH THE ENGINEER'S SEAL FOR THE STATE WHERE THE STRUCTURE IS LOCATED. ENGINEER'S SEAL MAY BE QUALIFIED "FOR DESIGN OF CONNECTIONS ONLY."

WELDING:

1. ALL STRUCTURAL STEEL WELDING SHALL CONFORM TO AMERICAN WELDING SOCIETY STANDARD D1.1, LATEST EDITION.
2. REINFORCING STEEL WELDING SHALL CONFORM TO AWS D1.4. REINFORCING SHALL CONFORM TO ASTM A–706.
3. ALL STRUCTURAL STEEL AND REINFORCING STEEL WELDING ELECTRODES SHALL CONFORM TO AWS A5.1 OR A5.5 E–70XX.
4. FIELD WELDING SHALL BE SHOWN ON ERECTION DRAWINGS.
5. ALL FIELD FULL PENETRATION WELDS SHALL BE INSPECTED AND TESTED BY A TESTING AGENCY TO BE PAID BY OWNER.
6. ALL EXPOSED WELDED CONNECTIONS SHALL BE GROUND SMOOTH AND SUBJECT TO ARCHITECT APPROVAL. THE CONTRACTOR SHALL SUBMIT WRITTEN PROCEDURE AND DETAILS TO THE ARCHITECT FOR REVIEW PRIOR TO COMMENCING THE WORK.
7. PAINT ALL WELDS WITH RUST INHIBITIVE PAINT.

MISCELLANEOUS:

1. THESE GENERAL NOTES SUPPLEMENT THE PROJECT SPECIFICATIONS. REFER TO PROJECT SPECIFICATIONS FOR ADDITIONAL REQUIREMENTS.
2. STRUCTURAL DRAWINGS ARE INTENDED TO BE USED WITH ARCHITECTURAL, MECHANICAL, ELECTRICAL, CIVIL AND FIRE SPRINKLER DRAWINGS. CONTRACTOR IS RESPONSIBLE FOR COORDINATING SUCH REQUIREMENTS INTO THEIR SHOP DRAWINGS AND CONSTRUCTION.
3. NO OPENINGS SHALL BE MADE IN ANY STRUCTURAL MEMBER WITHOUT THE WRITTEN APPROVAL OF THE PROFESSIONAL OF RECORD.
4. NO CHANGE IN SIZE, MATERIAL OR DIMENSION OF STRUCTURAL MEMBERS SHALL BE MADE WITHOUT THE WRITTEN APPROVAL OF THE PROFESSIONAL OF RECORD.
5. OPENINGS 1'–4" AND LESS ON A SIDE ARE GENERALLY NOT SHOWN ON THE STRUCTURAL DRAWINGS. REFER TO ARCHITECTURAL AND MECHANICAL DRAWINGS FOR SUCH OPENINGS.
6. THE CONTRACTOR IS RESPONSIBLE FOR LIMITING THE AMOUNT OF CONSTRUCTION LOAD IMPOSED UPON STRUCTURAL FRAMING. CONSTRUCTION LOADS SHALL NOT EXCEED THE DESIGN CAPACITY OF THE FRAMING AT THE TIME THE LOADS ARE IMPOSED.
7. THE STRUCTURE IS DESIGNED TO FUNCTION AS A UNIT UPON COMPLETION. THE CONTRACTOR IS RESPONSIBLE FOR FURNISHING ALL TEMPORARY BRACING AND/OR SUPPORT THAT MAY BE REQUIRED AS THE RESULT OF THE CONTRACTOR'S CONSTRUCTION METHODS AND/OR SEQUENCES.
8. DO NOT SCALE THESE DRAWINGS, USE DIMENSIONS.
9. CONTRACTOR'S CONSTRUCTION AND/OR ERECTION SEQUENCES SHALL RECOGNIZE AND CONSIDER THE EFFECTS OF THERMAL MOVEMENTS OF STRUCTURAL ELEMENTS DURING THE CONSTRUCTION PERIOD.
10. THE CONTRACTOR SHALL INFORM THE PROFESSIONAL OF RECORD IN WRITING OF ANY DEVIATION FROM THE CONTRACT DOCUMENTS. THE CONTRACTOR SHALL NOT BE RELIEVED OF THE RESPONSIBILITY OF SUCH DEVIATION BY THE PROFESSIONAL OF RECORD REVIEW OF SHOP DRAWINGS, PRODUCT DATA, ETC., UNLESS THE CONTRACTOR HAS SPECIFICALLY INFORMED THE PROFESSIONAL OF RECORD OF SUCH DEVIATION AT THE TIME OF SUBMISSION, AND THE PROFESSIONAL OF RECORD HAS GIVEN WRITTEN APPROVAL TO THE SPECIFIC DEVIATION.
11. CONNECTIONS OF ALL ITEMS SUPPORTED BY THE STRUCTURE ARE THE RESPONSIBILITY OF THE DISCIPLINES WHO ARE MAKING THESE ATTACHMENTS. THESE ATTACHMENTS SHALL BE DESIGNED TO RESIST ALL GRAVITY, WIND, WIND UPLIFT, THERMAL LOADS, ETC.
12. THE CONTRACTOR SHALL VERIFY ALL DIMENSIONS AND CONDITIONS AND EXISTING DIMENSIONS AND CONDITIONS.
13. UNLESS NOTED, SUBMIT SHOP DRAWINGS OF ALL FABRICATED MATERIALS FOR REVIEW. DESIGN DRAWINGS SHALL NOT BE REPRODUCED FOR USE AS SHOP DRAWINGS. SHOP DRAWINGS WILL NOT BE REVIEWED UNLESS THEY WERE CHECKED, BEAR THE INITIAL OF THE CHECKER AND ARE STAMPED "APPROVED" BY THE GENERAL CONTRACTOR.
14. ANY UNDERGROUND WORK OUTSIDE OF THE PROPOSED WORK SITE PROPERTY LINES WILL REQUIRE ADJACENT PROPERTY OWNER APPROVAL PRIOR TO CONSTRUCTION
15. NO CONSTRUCTION OR UNDERGROUND WORK SHOULD START BEFORE FINAL RESOLUTION AND COORDINATION WITH ALL THE UTILITY MEMBERS AS PER OUC (OFFICE OF UNDERGROUND COORDINATION) EFP (EXISTING FACILITY PROTECTION) SUBMITTAL REQUIREMENTS INCLUDING BUT NOT LIMITED TO FREIGHT TUNNELS, SEWER, GAS AND WATER LINES, EASEMENTS, NEARBY BRIDGES AND WATERWAYS
16. ANY CHANGE BEYOND WHAT WAS SUBMITTED TO THE OUC EFP FOR THE SUBJECT DOB APPLICATION, THAT MAY AFFECT UTILITIES OR INFRASTRUCTURE, GO 12 FT OR DEEPER DEEPER UNDERGROUND SURFACE OR MORE THAN 4 FT INTO THE PUBLIC WAY WILL REQUIRE A NEW DOB PERMIT APPLICATION WITH A NEW OUC EFP SUBMITTAL
17. ANY PERMANENT ENCROACHMENT INTO THE PUBLIC WAY WILL REQUIRE AN APPROVED GRANT OF PRIVILEGE. NO CONSTRUCTION TO START BEFORE FINAL AND FULL APPROVAL.

STEEL JOISTS:

1. STEEL JOISTS SHALL BE DESIGNED, FABRICATED AND ERECTED IN ACCORDANCE WITH THE "STANDARD SPECIFICATIONS FOR OPEN WEB STEEL JOISTS, 'K–SERIES' (LATEST)" OR THE "STANDARD SPECIFICATIONS FOR OPEN WEB STEEL JOISTS, 'LH–SERIES'(LATEST)" OF THE STEEL JOIST INSTITUTE (SJI).
2. STEEL JOISTS SHALL BE DESIGNED BY THE MANUFACTURER. THE MANUFACTURER'S ENGINEER SHALL BE RESPONSIBLE FOR THE DESIGN, ADEQUACY AND SAFETY OF AND SAFETY OF ALL STEEL JOISTS. ALL SHOP DRAWINGS SHALL BE SIGNED AND MANUFACTURER'S ENGINEER WITH THE ENGINEER'S SEAL FOR THE STATE WHERE THE STRUCTURE IS LOCATED.
3. UNLESS OTHERWISE NOTED, STEEL JOISTS SHALL BE DESIGNED AS SIMPLY SUPPORTED, UNIFORMLY LOADED TRUSSES WITH THE TOP CHORD BRACED AGAINST LATERAL BUCKLING. THE UNIFORM DESIGN LOAD SHALL BE THE TOTAL SAFE UNIFORMLY DISTRIBUTED LOAD AS SHOWN IN THE SJI STANDARD LOAD TABLE.
4. KCS (CONSTANT SHEAR) SERIES STEEL JOIST SHALL BE DESIGNED, FABRICATED AND ERECTED IN ACCORDANCE WITH SJI "K" SERIES JOIST WITH CAPACITIES LISTED IN VULCRAFT LATEST STEEL JOIST AND JOIST GIRDERS PUBLICATIONS.
5. WHEN NET UPLIFT FORCES DUE TO WIND ARE SHOWN ON THE DRAWINGS, THE MANUFACTURER SHALL DESIGN THE JOISTS, BRIDGING AND CONNECTIONS OF THE JOISTS TO THE SUPPORTING STRUCTURE FOR THE NET UPLIFT. A SINGLE LINE OF BOTTOM CHORD BRIDGING MUST BE PROVIDED NEAR THE FIRST BOTTOM CHORD PANEL POINTS WHENEVER UPLIFT DUE TO WIND FORCES IS SHOWN ON THE DESIGN DRAWINGS.
6. WHEN NONUNIFORM OR CONCENTRATED LOADS ARE SHOWN ON THE DRAWINGS, THE MANUFACTURER SHALL DESIGN THE JOISTS IN ACCORDANCE WITH PARAGRAPH 4.1 OF THE "STANDARD SPECIFICATION FOR OPEN WEB STEEL JOISTS, 'K–SERIES'" OR PARAGRAPH 103.1 OF THE "STANDARD SPECIFICATION FOR OPEN WEB STEEL JOIST, 'LH–SERIES'"
7. STEEL JOIST BEARING AT EXTERIOR WALLS SHALL BE DESIGNED TO RESIST 500 POUNDS LATERAL FORCE PERPENDICULAR TO THE JOIST AND APPLIED AT THE TOP OF THE JOIST BEARING. STIFFENERS AT THE JOIST BEARING SHALL BE ADDED IF REQUIRED.
8. STEEL JOIST BRIDGING SHALL BE PROVIDED IN ACCORDANCE WITH THE SJI SPECIFICATION. ALL BRIDGING AND BRIDGING ANCHORS SHALL BE PLACED AND STEEL JOIST ENDS FIXED PRIOR TO THE APPLICATION OF ANY LOADS. BRIDGING THAT TERMINATES AT, OR IS INTERRUPTED BY, STRUCTURAL STEEL BEAMS, MASONRY WALLS OR CONCRETE WALLS SHALL BE ATTACHED THERETO. COORDINATE BRIDGING LOCATIONS TO AVOID INTERFERENCE WITH ALL MECHANICAL, ELECTRICAL AND FIRE PROTECTION EQUIPMENT.
9. MINIMUM BEARING REQUIREMENTS FOR K–SERIES JOISTS, UNLESS NOTED OTHERWISE.
   2–1/2" ON STRUCTURAL STEEL
   4" ON STEEL BEARING PLATES OVER MASONRY OR CONCRETE
10. UNLESS NOTED OTHERWISE, K–SERIES JOISTS SHALL BE ATTACHED TO SUPPORTING STEEL WORK OR STEEL BEARING PLATES WITH (2) 1/8" FILLET WELD (ONE EACH SIDE) 1" LONG, WITH (2) 1/2" DIAMETER BOLT, OR WITH A COMBINATION OF (1) 1/8" FILLET WELD AND (1) 1/2" DIAMETER BOLT.
11. UNLESS NOTED K–SERIES JOISTS SHALL HAVE 2 1/2" DEEP SEAT, WHERE STEEL JOIST OR GIRDER SLOPE EXCEEDS 1/4" PER FT., PROVIDE SLOPED BEARING SEAT.
12. MINIMUM BEARING REQUIREMENTS FOR LH–SERIES JOISTS, UNLESS NOTED OTHERWISE.
    4" ON STRUCTURAL STEEL
    6" ON STEEL BEARING PLATES OVER MASONRY OR CONCRETE
13. UNLESS NOTED OTHERWISE, LH–SERIES JOISTS SHALL BE ATTACHED TO SUPPORTING STEEL WORK OR STEEL BEARING PLATES WITH (2) 1/4" FILLET WELD (ONE EACH SIDE) 2" LONG, WITH (2) 3/4" DIAMETER BOLTS (ONE EACH SIDE).
14. STEEL JOISTS AT COLUMN CENTER LINES SHALL BE BOLTED TO STRUCTURAL STEEL WITH (2) 1/2" DIAMETER BOLTS OR (2) 3/4" DIAMETER BOLTS FOR LH–SERIES. WHERE STEEL JOISTS DO NOT OCCUR AT THE COLUMN, USE BOLTED CONNECTIONS FOR THE STEEL JOIST CLOSEST TO THE CENTER LINE.
15. HOLES IN STEEL JOIST CHORDS WILL NOT BE PERMITTED, EXCEPT FOR BOLTED CONNECTIONS AT THE BEARING END OF THE STEEL JOIST.
16. ALL ITEMS SUCH AS MECHANICAL EQUIPMENT, DUCT WORK, PIPES, CEILING, FIXTURES, ETC. THAT ARE TO BE SUPPORTED OR HUNG FROM THE STEEL JOIST SHALL BE FRAMED WITH AUXILIARY FRAMING TO THE PANEL POINTS OF THE STEEL JOIST. METHODS OF FRAMING THAT INDUCE BENDING TO THE STEEL JOIST CHORDS OR WEB MEMBERS WILL NOT BE PERMITTED.
17. ALL STEEL SHALL BE HOT DIP GALVANIZED.

SPECIAL INSPECTIONS:

1. A. SPECIAL INSPECTIONS SHALL FOLLOW THE REQUIREMENTS OF CITY OF CHICAGO BUILDING CODE.
   B. SPECIAL INSPECTOR (SI) SHALL BE RETAINED AND PAID BY THE OWNER.
   C. SPECIAL INSPECTOR SHALL BE FULLY QUALIFIED, APPROVED BY THE BUILDING OFFICIAL, REGISTERED BY APPLICABLE REGISTRATION BOARD IF REQUIRED AND ACCEPTABLE TO THE ARCHITECT.
   D. THE DUTIES OF THE SPECIAL INSPECTOR SHALL INCLUDE, BUT ARE NOT LIMITED TO, VERIFICATION OF CONSTRUCTION QUALITY CONTROL, TESTING, COMPLIANCE WITH THE CONSTRUCTION DOCUMENTS, BUILDING CODE REQUIREMENTS, AND LOCAL BUILDING DEPARTMENT REQUIREMENTS.
   E. IT IS THE CONTRACTOR'S RESPONSIBILITY TO PROVIDE PROPER NOTIFICATION TO THE SPECIAL INSPECTOR AND PROCEED WITH THE CONSTRUCTION ONLY AFTER THE SPECIAL INSPECTOR'S APPROVAL.
2. SPECIAL INSPECTORS SHALL KEEP RECORDS OF ALL INSPECTIONS AND TESTING. THE SPECIAL INSPECTOR SHALL FURNISH INSPECTION REPORTS TO THE CODE OFFICAIL, AND TO THE REGISTERED DESIGN PROFESSIONAL OF RECORD. ALL DISCREPANCIES SHALL BE BROUGHT TO THE IMMEDIATE ATTENTION OF THE CONTRACTOR FOR CORRECTION. IF THE DISCREPANCIES ARE NOT CORRECTED, THE DISCREPANCIES SHALL BE BROUGHT TO THE ATTENTION OF THE CODE OFFICIAL AND TO THE REGISTERED DESIGN PROFESSIONAL OF RECORD. A FINAL REPORT OF INSPECTIONS DOCUMENTING COMPLETION AND COMPLIANCE OF ALL REQUIRED SPECIAL INSPECTIONS AND CORRECTION OF ANY DISCREPANCIES NOTED IN THE INSPECTIONS SHALL BE SUBMITTED PRIOR TO THE ISSUANCE OF A CERTIFICATE OF OCCUPANCY. INTERIM REPORTS SHALL BE SUBMITTED PERIODICALLY WITH MINIMUM FREQUENCY OF TWO WEEKS.
3. SPECIAL INSPECTIONS ARE REQUIRED FOR, BUT NOT LIMITED TO, THE FOLLOWING ACTIVITIES:
   A. MASONRY AND REINFORCING.
   B. FOOTING EXCAVATION AND FILL (GEOTECHNICAL ENGINEER CERTIFICATIONS IS REQUIRED PRIOR TO POURING CONCRETE).
   C. ALL FIELD WELDING.
   D. ALL HIGH STRENGTH BOLTING AND ANCHORING SYSTEMS.
   E. STEEL FLOOR AND ROOF DECK FASTENING.
4. FAILURE TO NOTIFY THE SPECIAL INSPECTOR MAY RESULT IN CONTRACTOR HAVING TO REMOVE WORK FOR THE PURPOSE OF INSPECTION AT CONTRACTOR'S EXPENSE.
5. PREMATURE NOTIFICATION FOR INSPECTIONS WILL RESULT IN AN ADDITIONAL INSPECTION WITH ALL EXPENSES AND FEES PAID BY THE CONTRACTOR.

AUGERCAST PILES:

AUGERCAST PILES SHALL CONFORM TO THE FOLLOWING REQUIREMENTS:

1. PILES SHALL HAVE A PUMP MIX GROUT WITH MINIMUM STRENGTH OF 5000 PSI AT 28 DAYS.
2. SEE SCHEDULE FOR PILES DIAMETER.
3. CEMENT SHALL BE TYPE II.
4. REINFORCEMENT SHALL BE ASSEMBLED AND TIED TOGETHER AS A UNIT AND PLACED WHILE THE CONCRETE IS IN A SEMI–FLUID STATE FOR AUGER UNCASED PILES. PLACE UNIT PRIOR TO PLACING CONCRETE FOR CASED PILES. FOR PILES INSTALLED WITH A HOLLOW–STEM AUGER WHERE FULL–LENGTH LONGITUDINAL STEEL REINFORCEMENT IS PLACED WITHOUT LATERAL TIES, THE REINFORCEMENT SHALL BE PLACED THROUGH THE HOLLOW STEM OF THE AUGER PRIOR TO FILLING THE PILE WITH CONCRETE. ALL PILE REINFORCEMENT SHALL HAVE A CONCRETE COVER OF NOT LESS THAN 2.5 INCHES.
5. WHERE CONCRETE IS PLACED THROUGH A FUNNEL HOPPER AT THE TOP OF THE PILE, THE CONCRETE MIX SHALL BE DESIGNED AND PROPORTIONED SO AS TO PRODUCED A COHESIVE WORKABLE MIX HAVING A SLUMP OF NOT LESS THAN 4 INCHES AND NOT MORE THAN 6 INCHES. WHERE CONCRETE IS TO BE PUMPED, THE MIX DESIGN INCLUDING SLUMP SHALL BE ADJUSTED TO PRODUCE A PUMPABLE CONCRETE.
6. CONCRETE SHALL BE PLACED IN SUCH A MANNER AS TO ENSURE THE EXCLUSION OF ANY FOREIGN MATTER AND TO SECURE A FULL–SIZED SHAFT. CONCRETE SHALL NOT BE PLACED THROUGH WATER EXCEPT WHERE A TREMIE OR OTHER APPROVED METHOD IS USED. WHEN DEPOSITING CONCRETE FROM THE TOP OF THE PILE, THE CONCRETE SHALL NOT BE CHUTED DIRECTLY INTO THE PILE BUT SHALL BE POURED IN A RAPID AND CONTINUOUS OPERATION THROUGH A FUNNEL HOPPER CENTERED AT THE TOP OF THE PILE. WHERE PILE SHAFTS ARE FORMED THROUGH UNSTABLE SOILS AND CONCRETE IS PLACED IN AN OPEN–DRILLED HOLE, A STEEL LINER SHALL BE INSERTED IN THE HOLE PRIOR TO PLACING THE CONCRETE. WHERE THE STEEL LINER IS WITHDRAWN DURING CONCRETING, THE LEVEL OF CONCRETE SHALL BE MAINTAINED ABOVE THE BOTTOM OF THE LINER AT A SUFFICIENT HEIGHT TO OFFSET ANY HYDROSTATIC OR LATERAL SOIL PRESSURE.
7. AUGERED CAST–IN–PLACE PILES SHALL NOT BE INSTALLED WITHIN SIX PILES DIAMETERS CENTER TO CENTER OF A PILE FILLED WITH CONCRETE LESS THAN 12 HOURS OLD. IF THE CONCRETE LEVEL IN ANY COMPLETED PILE DROPS DUE TO INSTALLATION OF AN ADJACENT PILE, THE PILE SHALL BE REPLACED.

PRESTRESSED/PRECAST CONCRETE PLANKS

1. PANELS SHALL BE DESIGNED, FABRICATED AND ERECTED IN ACCORDANCE WITH SPECIFICATION FOR THIS JOB AND THE PANEL MANUFACTURER.
2. PANELS SHALL BE DESIGNED BY THE MANUFACTURER. THE MANUFACTURER'S ENGINEER SHALL BE RESPONSIBLE FOR THE DESIGN, ADEQUACY AND SAFETY OF ALL PANELS. ALL SHOP DRAWINGS SHALL BE SIGNED AND SEALED BY THE MANUFACTURER'S ENGINEER WITH THE ENGINEER'S SEAL FOR THE STATE WHERE THE STRUCTURE IS LOCATED.
3. PANELS SHALL BE DESIGNED FOR ALL LOADS SHOWN ON THE DRAWINGS.
4. MANUFACTURER OF PANELS SHALL BE RESPONSIBLE FOR THE DESIGN OF LIFTING HARDWARE. THE MANUFACTURER'S ENGINEER SHALL SIGN AND SEAL SHOP DRAWINGS FOR LIFTING DESIGN.
5. THE MANUFACTURER AND ERECTOR OF THE PANELS SHALL BE RESPONSIBLE FOR THE DISTRIBUTION OF LOADING FROM ANY VEHICLES OR CRANE ON THE FLOOR SLABS. ANY CRACKING OR DAMAGE TO THE FLOORS CAUSED BY ERECTION EQUIPMENT FOR THE CONCRETE TRUCKS, ETC. WILL REQUIRE REMOVAL AND REPLACEMENT OF THE DAMAGED OR CRACKED AREAS AT NO ADDITIONAL COST TO THE OWNER.

ROOF LOADING PLAN

MEZZANINE LOADING PLAN

MAIN FLOOR LOADING PLAN

LOWER FLOOR LOADING PLAN

STRUCTURAL ENGINEER
GreenbergFarrow
21 South Evergreen Avenue
Suite 200
Arlington Heights, IL 60005
t: 847 788 9200

LaSalle Associates Consulting, Inc.
605 Wildwood Ln, West Chicago, IL 60185
630-293-9022 www.lasalleassoc.com

REV	DATE	BY	DESCRIPTION
F	10-16-2020	MH	ADDENDUM #1
E	07-21-2020	MH	OUC RE-SUBMITTAL
D	06-19-2020	MH	PERMIT RESPONSE
B	01-07-2020	MH	ISSUED FOR BID
A	12-27-19	MH	ISSUED FOR PERMIT

SCALE:	AS SHOWN
DATE:	12–27–19
DRAWN:	CB
CHECKED:	MH
APPROVED:	MH

ACEng
www.ac–engineering.com

CLIENT
GREEN ERA SUSTAINABILITY, LLC
ANAEROBIC DIGESTER PROJECT
650 W. 83RD STREET
CHICAGO, IL. 60620
PERMIT APPLICATION No = 100854184 (D)

DESCRIPTION
GENERAL NOTES AND LOADING PLANS
–––
–––
–––

PROJECT NO: 20181732.0

SHEET: S–100

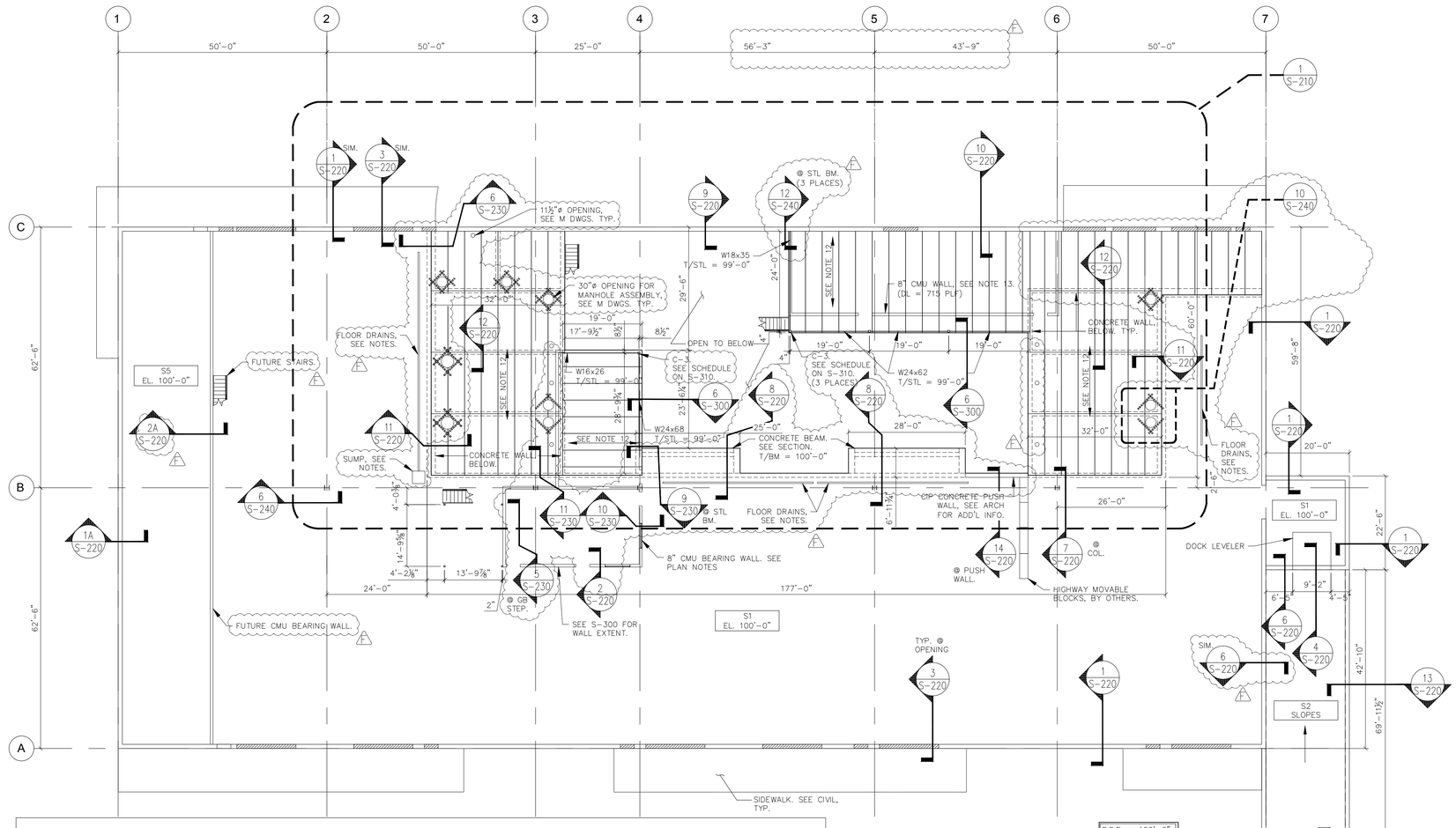

STRUCTURAL SLAB SCHEDULE								
MARK	DESIGNATION (E–W)	SLAB THICKNESS	DIRECTION OF OUTER REINFORCING LAYER	TOP REINFORCING GENERAL REINFORCING	BOTTOM REINFORCING GENERAL REINFORCING	DESIGNATION (N–S)	TOP REINFORCING GENERAL REINFORCING	BOTTOM REINFORCING GENERAL REINFORCING
S–1	MAIN BUILDING	10"	E–W	#6 @ 11"	#6 @ 10"	MAIN BUILDING	#6 @ 11"	#6 @ 10"
S–2	TRUCK WELL	12"	E–W	#6 @ 16"	#6 @ 16"	LOADING DOCK SLAB	#6 @ 12"	#6 @ 12"
S–3	PIT FLOOR	10"	E–W	#6 @ 14"	#5 @ 14"	PIT FLOOR	#6 @ 10"	#5 @ 11"
S–3A	PIT FLOOR	10"	E–W	#6 @ 14"	#5 @ 14"	PIT FLOOR	#6 @ 8"	#5 @ 11"
S–3B	PIT FLOOR	10"	E–W	#6 @ 14"	#5 @ 14"	PIT FLOOR	#6 @ 7"	#6 @ 11"
S–3C	PIT FLOOR	10"	E–W	#6 @ 10"	#5 @ 14"	PIT FLOOR	#6 @ 10"	#5 @ 11"
S–4	TANKS	12"	E–W	#6 @ 13"	#6 @ 13"	TANKS	#6 @ 16"	#6 @ 16"
S–5	OFFICE AREA	10"	N–S	#5 @ 14"	#5 @ 14"	OFFICE AREA	#5 @ 14"	#6 @ 9"
S–6	UTILITY CORRIDOR	12"	E–W	#5 @ 12"	#6 @ 12"	UTILITY CORRIDOR	#5 @ 14"	#5 @ 16"

NOTES:
1. WHERE DIFFERENT AREAS INTERFACE AT TOP REINFORCING, USE THE GREATER REQUIREMENT BETWEEN THE ADJACENT AREAS (DO NOT COMBINE TOP REINFORCEMENT FROM EACH AREA).

NOTES:
1. SEE SHEET S–201 FOR GRADE BEAMS AND PILES LAYOUT.
2. SEE SHEET S–100 FOR GENERAL NOTES AND LOADING PLANS.
3. ALL ELEVATIONS REFERENCED FROM FINISH FLOOR ELEVATION OF 100'–0" FOR REFERENCE ONLY. SEE SITE PLAN FOR ACTUAL FINISH FLOOR ELEVATION.
4. CONTRACTOR TO PREPARE SUBGRADE FOR BUILDING PAD AND PAVING AREAS PER GEOTECHNICAL ENGINEER'S REPORT AND RECOMMENDATIONS.
5. SEE CIVIL DRAWINGS FOR GRADES AND ADDITIONAL INFORMATION.
6. FOR TYPICAL REINFORCING LAPS AT CORNERS/INTERSECTIONS OF GRADE BEAMS SEE S–230.
7. FOUNDATION FOR PRECAST WALL PANELS WERE DESIGNED WITH THE ASSUMPTION THAT THE PRECAST WALL PANEL WILL BE PLACED PRIOR TO THE STRUCTURAL STEEL AND THE PANELS WILL BE TEMPORARY SHORED. IF THIS ASSUMPTION IS INCORRECT, CONSULT HE STRUCTURAL ENGINEER OF RECORD FOR ADDITIONAL FOUNDATIONS FOR TEMPORARY COLUMNS.
8. JOINT FILLER SHALL BE PLACED IN CLEAN JOINTS, OVERFILLED AND SHAVED FLUSH.
9. SEE SPECIFICATIONS FOR ALL FLOOR SLAB FINISHES.
10. CONTROL JOINTS ARE NOT PERMITTED IN THE STRUCTURAL SLAB UNLESS SPECIFICALLY SHOWN.
11. FOR CONSTRUCTION JOINT IN THE STRUCTURAL SLAB SEE DETAIL 2/S–230.
12. 10" PRECAST PLANKS + 2" TOPPING, T/FLOOR = T/TOPPING = 100'–0". PRECAST PLANKS SHALL BE DESIGNED FOR ANY LOADS NOTED ON PLANS. CONCRETE TOPPING TO BE REINFORCED W/ 6X6–W2.1 X W2.1 W.W.F.
13. 8" CMU WALLS REINFORCED WITH #5 @ 32" O.C. TYPICAL U.N.O.
14. SEE DETAIL S–240 FOR TYPICAL STAIR FRAMING. SEE ARCH. DRAWINGS FOR LOCATION AND ADDITIONAL INFORMATION.
15. T/STL=TOP OF STEEL
16. 4" PREFABRICATED TRENCH & 3'x3'x3' SUMP. SEE M DRAWINGS FOR LOCATION & ADDITIONAL INFORMATION. SEE 8/S–230 FOR STRUCTURAL SLAB AROUND TRENCH & SUMP.
17. WALL OPENINGS SHOWN HATCHED. SEE ARCHITECTURAL DRAWINGS AND PRECAST SHOP DRAWINGS FOR EXTENT OF WALL OPENINGS.

OUC REVIEW NOTES:

DOB REQUIREMENTS SHALL BE FOLLOWED PRIOR TO AND DURING CONSTRUCTION:

a. THE SOIL ALLOWABLE BEARING CAPACITY AND THE POTENTIAL SETTLEMENT OF THE EXISTING AND PROPOSED FOUNDATIONS AS EFFECTED BY THE PROPOSED STRUCTURE AND AS REPORTED OR TO BE REPORTED BY THE GEOTECHNICAL ENGINEER IS CONSIDERED OR TO BE CONSIDERED IN THE STRUCTURAL DESIGN.
b. THE ALLOWABLE BEARING CAPACITY/PRESSURE FOR SHALLOW FOUNDATION SHOULD BE CALCULATED BY THE GEOTECHNICAL ENGINEER OF RECORD WITH A MINIMUM FACTOR OF SAFETY OF 3. THE GEOTECHNICAL ENGINEER OF RECORD SHOULD CONFIRM THAT AFTER UNDERCUT AND BACKFILL (IMPROVED FILL) OR UNDERCUT ALONE (TO NATIVE OR FILL) THE EXISTING FILL SHOULD NOT CARRY A PRESSURE IN EXCESS OF 500 PSF.
c. THE GEOTECHNICAL ENGINEER OF RECORD SHOULD CONFIRM THAT THE PROPOSED SAFE LOAD SHOULD NOT CAUSE PRESSURE ON ANY UNDERLYING SOIL STRATUM IN EXCESS OF MAXIMUM PRESSURES ESTABLISHED IN TABLE 13–132–060(a) AS SET IN SECTION 13–132–060.
d. ANY UNDERGROUND WORK OUTSIDE OF THE PROPOSED WORK SITE PROPERTY LINES WILL REQUIRE ADJACENT PROPERTY OWNER APPROVAL PRIOR TO CONSTRUCTION.
e. NO CONSTRUCTION OR UNDERGROUND WORK SHOULD START BEFORE FINAL RESOLUTION AND COORDINATION WITH ALL THE UTILITY MEMBERS AS PER OUC (OFFICE OF UNDERGROUND COORDINATION) EFP (EXISTING FACILITY PROTECTION) SUBMITTAL REQUIREMENTS INCLUDING BUT NOT LIMITED TO FREIGHT TUNNELS, SEWER, GAS AND WATER LINES, EASEMENTS, NEARLY BRIDGES AND WATERWAYS.
f. EFP EXPIRATION AS PER OUC, OR ANY CHANGE BEYOND WHAT WAS SUBMITTED TO THE OUC EFP FOR THE SUBJECT DOB APPLICATION, WILL REQUIRE A NEW OUC EFP SUBMITTAL AND RESOLUTION PRIOR TO CONSTRUCTION.
g. ANY PERMANENT ENCROACHMENT INTO THE PUBLIC WAY WILL REQUIRE AN APPROVAL GRANT OF PRIVILEGE. NO CONSTRUCTION TO START BEFORE FINAL AND FULL APPROVAL.
h. ALL EXISTING ABOVE AND BELOW GROUND STRUCTURES AND UTILITIES AT THE VICINITY OF THE WORK AREA SHOULD BE PROPERLY OBSERVED BY AN ILLINOIS LICENSED ENGINEER BEFORE AND DURING THE UNDERGROUND WORK FOR INDICATION OF MOVEMENT. IF DAMAGE IS OBSERVED, THE WORK SHOULD BE STOPPED.

DOB PILES REQUIREMENTS (ALL ADDITIONAL RECOMMENDATIONS AND REQUIREMENT BASED ON THE OUC OF CDOT UTILITY MEMBERS, AND THE SOILS REPORT AND FOLLOW UP ADDENDUMS/REPORTS SHOULD ALSO BE FOLLOWED)

1. ALL EXISTING ABOVE AND BELOW GROUND STRUCTURES AND UTILITIES AT THE VICINITY OF THE WORK AREA SHOULD BE OBSERVED DURING THE UNDERGROUND INSTALLATION FOR INDICATION OF MOVEMENT. IF DAMAGE IS OBSERVED, THE WORK SHOULD BE STOPPED.
2. POT–HOLING SHOULD NOT EXTEND BELOW THE ZONE OF INFLUENCE OF THE ADJACENT FOOTING/UTILITIES AS DEFINED BY A LINE EXTENDING DOWNWARD FROM THE FOOTING/UTILITIES BASE AT A 2H–1V SLOPE.
3. PILE INSTALLATION TO START JUST AFTER FULL VARIANCE APPROVAL BY THE STRUCTURAL GROUP OF DOB.
4. BEFORE THE START OF CONSTRUCTION ADDITIONAL BORING WITH QU TESTS AND RQD CORING OF 8 TO 10 FT UNDER THE TIP OF THE PROPOSED PILES WILL BE REQUIRED. THE BORING TO BE WITHIN 15 FT OF EACH OF THE PROPOSED PILES/PILE GROUP. BASED ON THE RESULTS AND USING THE MOST CRITICAL UNDERGROUND CONDITIONS THE GEOTECHNICAL ENGINEER OF RECORD SHOULD ASSIGN A MINIMUM OF ONE LOAD TEST TO COVER EVERY COMBINATION OF PILE AND ASSOCIATED COMPRESSION AND TENSION DESIGN LOAD. THE TEST PILE SHOULD BE CONSTRUCTED WITH THE CONTRACTOR SELECTED PRODUCTION EQUIPMENT.
5. FIELD LOAD TEST TO FOLLOW ASTMD1143 FOR COMPRESSION AND D3698 FOR TENSION.
6. PILES THAT ARE NOT PERMANENTLY CASED SHOULD BE TESTED BY NON–DESTRUCTIVE TESTING (NDT) LIKE FOR EXAMPLE IMPULSE RESPONSE SPECTRUM METHOD (IF APPLICABLE). AFTER CALIBRATING THE NDT WITH THE LOAD TEST ALL OTHER PILES MUST ALSO BE TESTED WITH THE NDT.
7. FOR PILES INVOLVING CONCRETE/GROUTING (LIKE FOR EXAMPLE CAST IN PLACE/AUGER–CAST): THE SELECTED PILES SHOULD BE VERIFIED BY AN ILLINOIS LICENSED P.E. SPECIALIZED IN GEOTECHNICAL ENGINEERING TO HAVE A MINIMUM ALLOWABLE BEARING CAPACITY WITH A FACTOR OF SAFETY OF 2.5. THE PILES SHOULD ONLY BE INSTALLED BY A VERY EXPERIENCED CONTRACTOR WITH AUTOMATED RECORDING EQUIPMENT WHICH DETAILED GROUT PRESSURE, FED RATE ETC. PILES SHOULD BE ALLOWED TO SET OVERNIGHT BEFORE A NEW PILE IS CAST WITHIN 15 FEET. ACTUAL GROUT VOLUME PLACED IN EACH PILE SHOULD BE COMPARED WITH THE THEORETICAL GROUT VOLUME, GIVEN THE PILE LENGTH AND DIAMETER. A GROUT AVERAGE VOLUME SHOULD EXCEED THE THEORETICAL VOLUME OF THE HOLE, BUT NO MORE THAN 30% ABOVE THE THEORETICAL VOLUME. LOAD TEST TO BE PERFORMED ON SACRIFICIAL PILE TO CHECK THE CONTRACTOR'S PROCEDURES AND THE CAPACITY OF THE PILE TO AT LEAST 2.5 THE PROPOSED DESIGN LOAD. THE GEOTECHNICAL ENGINEER OF RECORD SHOULD SPECIFY THE MOST CRITICAL PLACE TO PERFORM THE LOAD TEST/S. THE TEST PILE SHOULD BE CONSTRUCTED WITH THE CONTRACTOR SELECTED PRODUCTION EQUIPMENT.
8. IF NEEDED TO WITHSTAND LATERAL PRESSURE PILES SHOULD BE USED IN PILE GROUPS OF AT LEAST 3 PILES. AN ILLINOIS LICENSED S.E. SHOULD VERIFY THE PILE CAPACITIES FOR LATERAL LOADS.
9. THE PILE INSTALLATION PROCESS SHOULD BE PERFORMED UNDER THE DIRECTION OF THE GEOTECHNICAL ENGINEER. THE GEOTECHNICAL ENGINEER SHOULD DOCUMENT THE PILE INSTALLATION PROCESS INCLUDING SOIL/ROCK AND GROUNDWATER CONDITIONS ENCOUNTERED, CONSISTENCY WITH EXPECTED CONDITIONS, AND DETAILS OF THE INSTALLED PILE. IN ADDITION, THE PILES DESIGN AND CONSTRUCTION PROCEDURES SHOULD BE REVIEWED AND APPROVED BY THE GEOTECHNICAL ENGINEER OF RECORD PRIOR TO THE START OF CONSTRUCTION.
10. ALL EXISTING ABOVE AND BELOW GROUND STRUCTURES AND UTILITIES AT THE VICINITY OF THE WORK AREA SHOULD BE PROPERLY OBSERVED BEFORE AND DURING THE UNDERGROUND INSTALLATION FOR INDICATION OF MOVEMENT. IF DAMAGE IS OBSERVED, THE WORK SHOULD BE STOPPED.
11. DOB MEMO DATED 06.15.17 INSTRUCTIONS TO BE FOLLOWED IN FULL.

MAIN LEVEL – FOUNDATION/ STRUCTURAL SLAB PLAN
1/16" = 1'–0"

1 S–200

0' 10' 20' 40'
SCALE: 1"=20'

LICENSED STRUCTURAL ENGINEER
Proj 20181732
MICHAEL E HAAS
081-005572
date 10/16/20
STATE OF ILLINOIS
exp. 11/30/20

STRUCTURAL ENGINEER
GreenbergFarrow
21 South Evergreen Avenue
Suite 200
Arlington Heights, IL 60005
t: 847 788 9200

LaSalle Associates Consulting, Inc.
605 Wildwood Ln, West Chicago, IL 60185
630-293-9022 www.lasalleassoc.com

REV	DATE	BY	DESCRIPTION
4	10-16-2020	MH	ADDENDUM #1
3	07-21-2020	MH	OUC RE–SUBMITTAL
2	06-19-2020	MH	PERMIT RESPONSE
1	01-07-2020	MH	ISSUED FOR BID
A	12-27-19	MH	ISSUED FOR PERMIT

SCALE: AS SHOWN
DATE: 12–27–19
DRAWN: CB
CHECKED: MH
APPROVED: MH

ACEng
www.ac–engineering.com

CLIENT
GREEN ERA SUSTAINABILITY, LLC
ANAEROBIC DIGESTER PROJECT
650 W. 83RD STREET
CHICAGO, IL. 60620
PERMIT APPLICATION No = 100854184 4

DESCRIPTION
MAIN LEVEL – FOUNDATION PLAN

PROJECT NO:
20181732.0

SHEET:
S–200

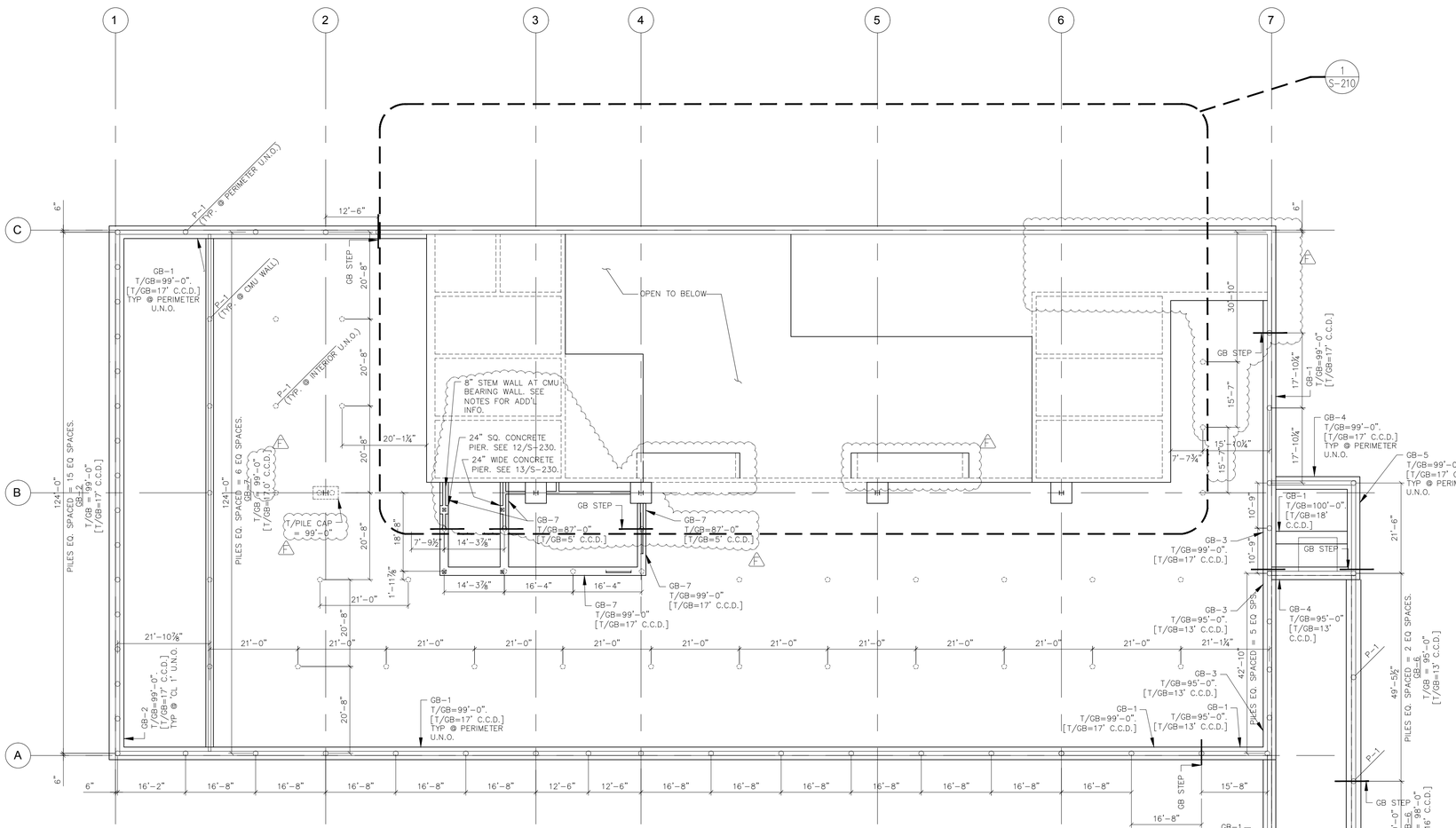

GRADE BEAM SCHEDULE – T/GB = SEE PLAN					
GB-#	SIZE (w x h)	TOP REINF.	BOT. REINF.	STIRRUPS	UPLIFT (KIPS)
GB-1	3'-0" x 3'-0"	(8) – #6	(8) – #6	#4 @ 13" O.C. U.N.O.	0
GB-2	3'-6" x 3'-0"	(6) – #6	(6) – #6		0
GB-3	3'-0" x 3'-0"	(6) – #6	(6) – #6		0
GB-4	3'-0" x 3'-0"	(7) – #7	(8) – #7		0
GB-5	3'-0" x 3'-0"	(6) – #7	(7) – #7		0
GB-6	3'-6" x 3'-0"	(7) – #6	(8) – #6		0
GB-7	2'-0" x 2'-6"	(6) – #6	(6) – #6		0
GB-8	3'-0" x 3'-0"	(5) – #5	(4) – #5		0
GB-8A	3'-0" x 3'-0"	(5) – #5	(5) – #5		0
GB-9	3'-0" x 3'-0"	(5) – #6	(5) – #6		0
GB-10	5'-0" x 3'-0"	(8) – #6	(6) – #6		0
GB-11	4'-0" x 4'-0"	(5) – #6	(5) – #6		0
GB-12	3'-0" x 3'-0"	(4) – #6	(4) – #6		0
GB-13	3'-0" x 3'-0"	(8) – #6	(7) – #6		0

NOTES:
- TOP FLEXURAL REINFORCEMENT CONTINUOUS OVER PILES, LAP AT MID-SPAN.
- BOTTOM FLEXURAL REINFORCEMENT CONTINUOUS AT MID-SPAN, LAP @ PILES.

AUGERED AND CAST-IN-PLACE (ACIP) PILE – T/PILE= SEE PLAN				
P-#	SHAFT DIAMETER (ø)	SHAFT REINFORCING		ALLOWABLE COMPRESSIVE CAPACITY
		VERTICAL REINF.	HORIZ. TIES	
P-1	1'-2"	(6) #5	#3 @ 12" O.C.	90 TON

PILE COUNT AT MAIN LEVEL	
SIZE	QUANTITY
1-2" ø	92 PILES

NOTES:
1. SEE S-200 FOR SIZE AND LOCATION OF WALL OPENINGS.
2. SEE SHEET S-100 FOR GENERAL NOTES AND LOADING PLANS.
3. ALL ELEVATIONS REFERENCED FROM FINISH FLOOR ELEVATION OF 100'-0" FOR REFERENCE ONLY. SEE SITE PLAN FOR ACTUAL FINISH FLOOR ELEVATION.
4. SEE CIVIL DRAWINGS FOR GRADES AND ADDITIONAL INFORMATION.
5. FOR TYPICAL REINFORCING LAPS AT CORNERS/INTERSECTIONS OF GRADE BEAMS SEE S-230.
6. PILES SHALL HAVE THE REQUIRED TON CAPACITY NOTED ON SCHEDULE.
7. SEE 230 FOR GRADE-BEAM STEP DETAIL.

0' 10' 20' 40'

SCALE: 1"=20'

MAIN LEVEL – PILES LAYOUT PLAN

1/16" = 1'-0"

1 S-201

OUC REVIEW NOTES:

DOB REQUIREMENTS SHALL BE FOLLOWED PRIOR TO AND DURING CONSTRUCTION:

a. THE SOIL ALLOWABLE BEARING CAPACITY AND THE POTENTIAL SETTLEMENT OF THE EXISTING AND PROPOSED FOUNDATIONS AS EFFECTED BY THE PROPOSED STRUCTURE AND AS REPORTED OR TO BE REPORTED BY THE GEOTECHNICAL ENGINEER IS CONSIDERED OR TO BE CONSIDERED IN THE STRUCTURAL DESIGN.
b. THE ALLOWABLE BEARING CAPACITY/PRESSURE FOR SHALLOW FOUNDATION SHOULD BE CALCULATED BY THE GEOTECHNICAL ENGINEER OF RECORD WITH A MINIMUM FACTOR OF SAFETY OF 3. THE GEOTECHNICAL ENGINEER OF RECORD SHOULD CONFIRM THAT AFTER UNDERCUT AND BACKFILL (IMPROVED FILL) OR UNDERCUT ALONE (TO NATIVE OR FILL) THE EXISTING FILL SHOULD NOT CARRY A PRESSURE IN EXCESS OF 500 PSF.
c. THE GEOTECHNICAL ENGINEER OF RECORD SHOULD CONFIRM THAT THE PROPOSED SAFE LOAD SHOULD NOT CAUSE PRESSURE ON ANY UNDERLYING SOIL STRATUM IN EXCESS OF MAXIMUM PRESSURES ESTABLISHED IN TABLE 13-132-060(a) AS SET IN SECTION 13-132-060.
d. ANY UNDERGROUND WORK OUTSIDE OF THE PROPOSED WORK SITE PROPERTY LINES WILL REQUIRE ADJACENT PROPERTY OWNER APPROVAL PRIOR TO CONSTRUCTION.
e. NO CONSTRUCTION OR UNDERGROUND WORK SHOULD START BEFORE FINAL RESOLUTION AND COORDINATION WITH ALL THE UTILITY MEMBERS AS PER OUC (OFFICE OF UNDERGROUND COORDINATION) EFP (EXISTING FACILITY PROTECTION) SUBMITTAL REQUIREMENTS INCLUDING BUT NOT LIMITED TO FREIGHT TUNNELS, SEWER, GAS AND WATER LINES, EASEMENTS, NEARLY BRIDGES AND WATERWAYS.
f. EFP EXPIRATION AS PER OUC, OR ANY CHANGE BEYOND WHAT WAS SUBMITTED TO THE OUC EFP FOR THE SUBJECT DOB APPLICATION, WILL REQUIRE A NEW OUC EFP SUBMITTAL AND RESOLUTION PRIOR TO CONSTRUCTION.
g. ANY PERMANENT ENCROACHMENT INTO THE PUBLIC WAY WILL REQUIRE AN APPROVAL GRANT OF PRIVILEGE. NO CONSTRUCTION TO START BEFORE FINAL AND FULL APPROVAL.
h. ALL EXISTING ABOVE AND BELOW GROUND STRUCTURES AND UTILITIES AT THE VICINITY OF THE WORK AREA SHOULD BE PROPERLY OBSERVED BY AN ILLINOIS LICENSED ENGINEER BEFORE AND DURING THE UNDERGROUND WORK FOR INDICATION OF MOVEMENT. IF DAMAGE IS OBSERVED, THE WORK SHOULD BE STOPPED.

DOB PILES REQUIREMENTS (ALL ADDITIONAL RECOMMENDATIONS AND REQUIREMENT BASED ON THE OUC OF CDOT UTILITY MEMBERS, AND THE SOILS REPORT AND FOLLOW UP ADDENDUMS/REPORTS SHOULD ALSO BE FOLLOWED)

1. ALL EXISTING ABOVE AND BELOW GROUND STRUCTURES AND UTILITIES AT THE VICINITY OF THE WORK AREA SHOULD BE OBSERVED DURING THE UNDERGROUND INSTALLATION FOR INDICATION OF MOVEMENT. IF DAMAGE IS OBSERVED, THE WORK SHOULD BE STOPPED.
2. POT-HOLING SHOULD NOT EXTEND BELOW THE ZONE OF INFLUENCE OF THE ADJACENT FOOTING/UTILITIES AS DEFINED BY A LINE EXTENDING DOWNWARD FROM THE FOOTING/UTILITIES BASE AT A 2H-1V SLOPE.
3. PILE INSTALLATION TO START JUST AFTER FULL VARIANCE APPROVAL BY THE STRUCTURAL GROUP OF DOB.
4. BEFORE THE START OF CONSTRUCTION ADDITIONAL BORING WITH QU TESTS AND RQD CORING OF 8 TO 10 FT UNDER THE TIP OF THE PROPOSED PILES WILL BE REQUIRED. THE BORING TO BE WITHIN 15 FT OF EACH OF THE PROPOSED PILES/PILE GROUP. BASED ON THE RESULTS AND USING THE MOST CRITICAL UNDERGROUND CONDITIONS THE GEOTECHNICAL ENGINEER OF RECORD SHOULD ASSIGN A MINIMUM OF ONE LOAD TEST TO COVER EVERY COMBINATION OF PILE AND ASSOCIATED COMPRESSION AND TENSION DESIGN LOAD. THE TEST PILE SHOULD BE CONSTRUCTED WITH THE CONTRACTOR SELECTED PRODUCTION EQUIPMENT.
5. FIELD LOAD TEST TO FOLLOW ASTMD1143 FOR COMPRESSION AND D3698 FOR TENSION.
6. PILES THAT ARE NOT PERMANENTLY CASED SHOULD BE TESTED BY NON-DESTRUCTIVE TESTING (NDT) LIKE FOR EXAMPLE IMPULSE RESPONSE SPECTRUM METHOD (IF APPLICABLE). AFTER CALIBRATING THE NDT WITH THE LOAD TEST ALL OTHER PILES MUST ALSO BE TESTED WITH THE NDT.
7. FOR PILES INVOLVING CONCRETE/GROUTING (LIKE FOR EXAMPLE CAST IN PLACE/AUGER-CAST): THE SELECTED PILES SHOULD BE VERIFIED BY AN ILLINOIS LICENSED P.E. SPECIALIZED IN GEOTECHNICAL ENGINEERING TO HAVE A MINIMUM ALLOWABLE BEARING CAPACITY WITH A FACTOR OF SAFETY OF 2.5. THE PILES SHOULD ONLY BE INSTALLED BY A VERY EXPERIENCED CONTRACTOR WITH AUTOMATED RECORDING EQUIPMENT WHICH DETAILED GROUT PRESSURE, FED RATE ETC. PILES SHOULD BE ALLOWED TO SET OVERNIGHT BEFORE A NEW PILE IS CAST WITHIN 15 FEET. ACTUAL GROUT VOLUME PLACED IN EACH PILE SHOULD BE COMPARED WITH THE THEORETICAL GROUT VOLUME, GIVEN THE PILE LENGTH AND DIAMETER. A GROUT AVERAGE VOLUME SHOULD EXCEED THE THEORETICAL VOLUME OF THE HOLE, BUT NO MORE THAN 30% ABOVE THE THEORETICAL VOLUME. LOAD TEST TO BE PERFORMED ON SACRIFICIAL PILE TO CHECK THE CONTRACTOR'S PROCEDURES AND THE CAPACITY OF THE PILE TO AT LEAST 2.5 THE PROPOSED DESIGN LOAD. THE GEOTECHNICAL ENGINEER OF RECORD SHOULD SPECIFY THE MOST CRITICAL PLACE TO PERFORM THE LOAD TEST/S. THE TEST PILE SHOULD BE CONSTRUCTED WITH THE CONTRACTOR SELECTED PRODUCTION EQUIPMENT.
8. IF NEEDED TO WITHSTAND LATERAL PRESSURE PILES SHOULD BE USED IN PILE GROUPS OF AT LEAST 3 PILES. AN ILLINOIS LICENSED S.E. SHOULD VERIFY THE PILE CAPACITIES FOR LATERAL LOADS.
9. THE PILE INSTALLATION PROCESS SHOULD BE PERFORMED UNDER THE DIRECTION OF THE GEOTECHNICAL ENGINEER. THE GEOTECHNICAL ENGINEER SHOULD DOCUMENT THE PILE INSTALLATION PROCESS INCLUDING SOIL/ROCK AND GROUNDWATER CONDITIONS ENCOUNTERED, CONSISTENCY WITH EXPECTED CONDITIONS, AND DETAILS OF THE INSTALLED PILE. IN ADDITION, THE PILES DESIGN AND CONSTRUCTION PROCEDURES SHOULD BE REVIEWED AND APPROVED BY THE GEOTECHNICAL ENGINEER OF RECORD PRIOR TO THE START OF CONSTRUCTION.
10. ALL EXISTING ABOVE AND BELOW GROUND STRUCTURES AND UTILITIES AT THE VICINITY OF THE WORK AREA SHOULD BE PROPERLY OBSERVED BEFORE AND DURING THE UNDERGROUND INSTALLATION FOR INDICATION OF MOVEMENT. IF DAMAGE IS OBSERVED, THE WORK SHOULD BE STOPPED.
11. DOB MEMO DATED 06.15.17 INSTRUCTIONS TO BE FOLLOWED IN FULL.

E

LICENSED STRUCTURAL ENGINEER
Proj 20181732
MICHAEL E HAAS
081-005572
date 10/16/20
STATE OF ILLINOIS
exp. 11/30/20

STRUCTURAL ENGINEER
GreenbergFarrow
21 South Evergreen Avenue
Suite 200
Arlington Heights, IL 60005
t: 847 788 9200

LaSalle Associates Consulting, Inc.
605 Wildwood Ln, West Chicago, IL 60185
630-293-9022 www.lasalleassoc.com

REV	DATE	BY	DESCRIPTION
E	10-16-2020	MH	ADDENDUM #1
D	07-21-2020	MH	OUC RE-SUBMITTAL
C	06-19-2020	MH	PERMIT RESPONSE
B	01-07-2020	MH	ISSUED FOR BID
A	12-27-19	MH	ISSUED FOR PERMIT

SCALE: AS SHOWN
DATE: 12-27-19
DRAWN: CB
CHECKED: MH
APPROVED: MH

ACEng
www.ac-engineering.com

CLIENT
GREEN ERA SUSTAINABILITY, LLC
ANAEROBIC DIGESTER PROJECT
650 W. 83RD STREET
CHICAGO, IL. 60620
PERMIT APPLICATION No = 100854184 D

DESCRIPTION
MAIN LEVEL – PILES LAYOUT PLAN

PROJECT NO:
20181732.0

SHEET:
S-201

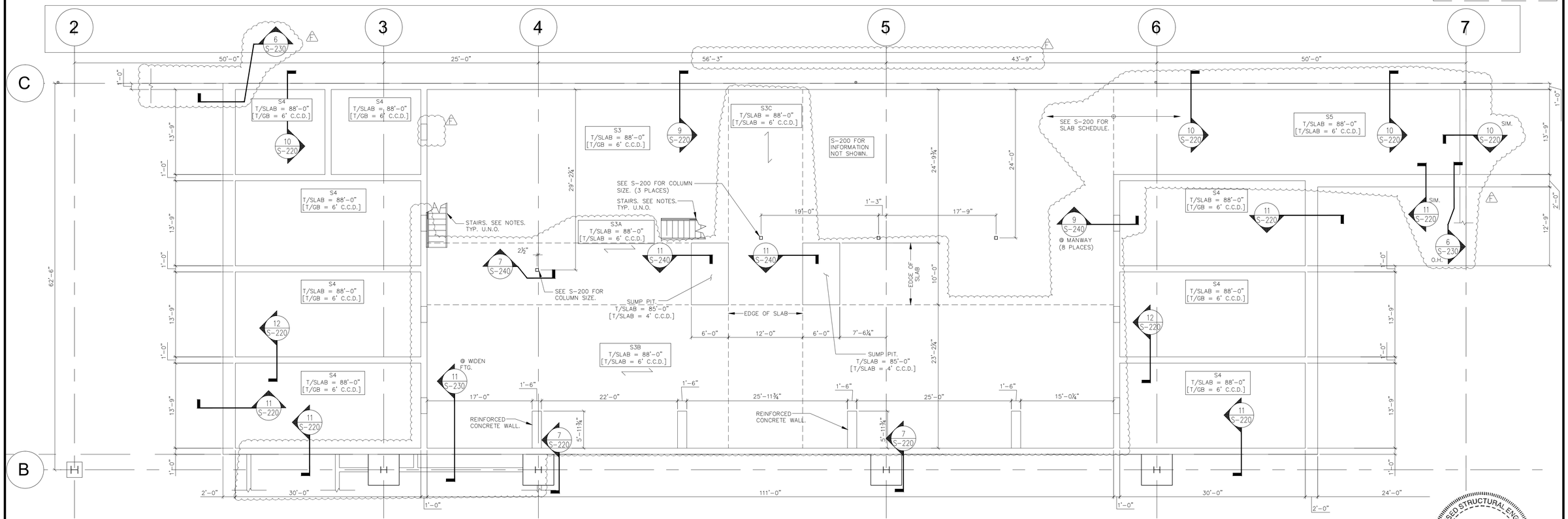

NOTES:

1. SEE S-200 FOR STRUCTURAL SLAB SCHEDULE.
2. SEE SHEET S-211 FOR GRADE BEAMS AND PILES LAYOUT.
3. SEE SHEET S-100 FOR GENERAL NOTES AND LOADING PLANS.
4. ALL ELEVATIONS REFERENCED FROM FINISH FLOOR ELEVATION OF 100'-0" FOR REFERENCE ONLY. SEE SITE PLAN FOR ACTUAL FINISH FLOOR ELEVATION.
5. CONTRACTOR TO PREPARE SUBGRADE FOR BUILDING PAD AND PAVING AREAS PER GEOTECHNICAL ENGINEER'S REPORT AND RECOMMENDATIONS.
6. SEE CIVIL DRAWINGS FOR GRADES AND ADDITIONAL INFORMATION.
7. JOINT FILLER SHALL BE PLACED IN CLEAN JOINTS, OVERFILLED AND SHAVED FLUSH.
8. SEE SPECIFICATIONS FOR ALL FLOOR SLAB FINISHES.
9. CONTROL JOINTS ARE NOT PERMITTED IN THE STRUCTURAL SLAB UNLESS SPECIFICALLY SHOWN.
10. FOR CONSTRUCTION JOINT IN THE STRUCTURAL SLAB SEE DETAIL 2/S-230.
11. SEE DETAIL S-240 FOR TYPICAL STAIR FRAMING. SEE ARCH. DRAWINGS FOR LOCATION AND ADDITIONAL INFORMATION.

0' 10' 20' 40'

SCALE: 1"=20'

LOWER LEVEL – FOUNDATION/SLAB PLAN (1 S-210)

⅛" = 1'-0"

OUC REVIEW NOTES:

DOB REQUIREMENTS SHALL BE FOLLOWED PRIOR TO AND DURING CONSTRUCTION:

a. THE SOIL ALLOWABLE BEARING CAPACITY AND THE POTENTIAL SETTLEMENT OF THE EXISTING AND PROPOSED FOUNDATIONS AS EFFECTED BY THE PROPOSED STRUCTURE AND AS REPORTED OR TO BE REPORTED BY THE GEOTECHNICAL ENGINEER IS CONSIDERED OR TO BE CONSIDERED IN THE STRUCTURAL DESIGN.
b. THE ALLOWABLE BEARING CAPACITY/PRESSURE FOR SHALLOW FOUNDATION SHOULD BE CALCULATED BY THE GEOTECHNICAL ENGINEER OF RECORD WITH A MINIMUM FACTOR OF SAFETY OF 3. THE GEOTECHNICAL ENGINEER OF RECORD SHOULD CONFIRM THAT AFTER UNDERCUT AND BACKFILL (IMPROVED FILL) OR UNDERCUT ALONE (TO NATIVE OR FILL) THE EXISTING FILL SHOULD NOT CARRY A PRESSURE IN EXCESS OF 500 PSF.
c. THE GEOTECHNICAL ENGINEER OF RECORD SHOULD CONFIRM THAT THE PROPOSED SAFE LOAD SHOULD NOT CAUSE PRESSURE ON ANY UNDERLYING SOIL STRATUM IN EXCESS OF MAXIMUM PRESSURES ESTABLISHED IN TABLE 13-132-060(a) AS SET IN SECTION 13-132-060.
d. ANY UNDERGROUND WORK OUTSIDE OF THE PROPOSED WORK SITE PROPERTY LINES WILL REQUIRE ADJACENT PROPERTY OWNER APPROVAL PRIOR TO CONSTRUCTION.
e. NO CONSTRUCTION OR UNDERGROUND WORK SHOULD START BEFORE FINAL RESOLUTION AND COORDINATION WITH ALL THE UTILITY MEMBERS AS PER OUC (OFFICE OF UNDERGROUND COORDINATION) EFP (EXISTING FACILITY PROTECTION) SUBMITTAL REQUIREMENTS INCLUDING BUT NOT LIMITED TO FREIGHT TUNNELS, SEWER, GAS AND WATER LINES, EASEMENTS, NEARLY BRIDGES AND WATERWAYS.
f. EFP EXPIRATION AS PER OUC, OR ANY CHANGE BEYOND WHAT WAS SUBMITTED TO THE OUC EFP FOR THE SUBJECT DOB APPLICATION, WILL REQUIRE A NEW OUC EFP SUBMITTAL AND RESOLUTION PRIOR TO CONSTRUCTION.
g. ANY PERMANENT ENCROACHMENT INTO THE PUBLIC WAY WILL REQUIRE AN APPROVAL GRANT OF PRIVILEGE. NO CONSTRUCTION TO START BEFORE FINAL AND FULL APPROVAL.
h. ALL EXISTING ABOVE AND BELOW GROUND STRUCTURES AND UTILITIES AT THE VICINITY OF THE WORK AREA SHOULD BE PROPERLY OBSERVED BY AN ILLINOIS LICENSED ENGINEER BEFORE AND DURING THE UNDERGROUND WORK FOR INDICATION OF MOVEMENT. IF DAMAGE IS OBSERVED, THE WORK SHOULD BE STOPPED.

DOB PILES REQUIREMENTS (ALL ADDITIONAL RECOMMENDATIONS AND REQUIREMENT BASED ON THE OUC OF CDOT UTILITY MEMBERS, AND THE SOILS REPORT AND FOLLOW UP ADDENDUMS/REPORTS SHOULD ALSO BE FOLLOWED)

1. ALL EXISTING ABOVE AND BELOW GROUND STRUCTURES AND UTILITIES AT THE VICINITY OF THE WORK AREA SHOULD BE OBSERVED DURING THE UNDERGROUND INSTALLATION FOR INDICATION OF MOVEMENT. IF DAMAGE IS OBSERVED, THE WORK SHOULD BE STOPPED.
2. POT-HOLING SHOULD NOT EXTEND BELOW THE ZONE OF INFLUENCE OF THE ADJACENT FOOTING/UTILITIES AS DEFINED BY A LINE EXTENDING DOWNWARD FROM THE FOOTING/UTILITIES BASE AT A 2H-1V SLOPE.
3. PILE INSTALLATION TO START JUST AFTER FULL VARIANCE APPROVAL BY THE STRUCTURAL GROUP OF DOB.
4. BEFORE THE START OF CONSTRUCTION ADDITIONAL BORING WITH QU TESTS AND RQD CORING OF 8 TO 10 FT UNDER THE TIP OF THE PROPOSED PILES WILL BE REQUIRED. THE BORING TO BE WITHIN 15 FT OF EACH OF THE PROPOSED PILES/PILE GROUP. BASED ON THE RESULTS AND USING THE MOST CRITICAL UNDERGROUND CONDITIONS THE GEOTECHNICAL ENGINEER OF RECORD SHOULD ASSIGN A MINIMUM OF ONE LOAD TEST TO COVER EVERY COMBINATION OF PILE AND ASSOCIATED COMPRESSION AND TENSION DESIGN LOAD. THE TEST PILE SHOULD BE CONSTRUCTED WITH THE CONTRACTOR SELECTED PRODUCTION EQUIPMENT.
5. FIELD LOAD TEST TO FOLLOW ASTMD1143 FOR COMPRESSION AND D3698 FOR TENSION.
6. PILES THAT ARE NOT PERMANENTLY CASED SHOULD BE TESTED BY NON-DESTRUCTIVE TESTING (NDT) LIKE FOR EXAMPLE IMPULSE RESPONSE SPECTRUM METHOD (IF APPLICABLE). AFTER CALIBRATING THE NDT WITH THE LOAD TEST ALL OTHER PILES MUST ALSO BE TESTED WITH THE NDT.
7. FOR PILES INVOLVING CONCRETE/GROUTING (LIKE FOR EXAMPLE CAST IN PLACE/AUGER-CAST): THE SELECTED PILES SHOULD BE VERIFIED BY AN ILLINOIS LICENSED P.E. SPECIALIZED IN GEOTECHNICAL ENGINEERING TO HAVE A MINIMUM ALLOWABLE BEARING CAPACITY WITH A FACTOR OF SAFETY OF 2.5. THE PILES SHOULD ONLY BE INSTALLED BY A VERY EXPERIENCED CONTRACTOR WITH AUTOMATED RECORDING EQUIPMENT WHICH DETAILED GROUT PRESSURE, FED RATE ETC. PILES SHOULD BE ALLOWED TO SET OVERNIGHT BEFORE A NEW PILE IS CAST WITHIN 15 FEET. ACTUAL GROUT VOLUME PLACED IN EACH PILE SHOULD BE COMPARED WITH THE THEORETICAL GROUT VOLUME, GIVEN THE PILE LENGTH AND DIAMETER. A GROUT AVERAGE VOLUME SHOULD EXCEED THE THEORETICAL VOLUME OF THE HOLE, BUT NO MORE THAN 30% ABOVE THE THEORETICAL VOLUME. LOAD TEST TO BE PERFORMED ON SACRIFICIAL PILE TO CHECK THE CONTRACTOR'S PROCEDURES AND THE CAPACITY OF THE PILE TO AT LEAST 2.5 THE PROPOSED DESIGN LOAD. THE GEOTECHNICAL ENGINEER OF RECORD SHOULD SPECIFY THE MOST CRITICAL PLACE TO PERFORM THE LOAD TEST/S. THE TEST PILE SHOULD BE CONSTRUCTED WITH THE CONTRACTOR SELECTED PRODUCTION EQUIPMENT.
8. IF NEEDED TO WITHSTAND LATERAL PRESSURE PILES SHOULD BE USED IN PILE GROUPS OF AT LEAST 3 PILES. AN ILLINOIS LICENSED S.E. SHOULD VERIFY THE PILE CAPACITIES FOR LATERAL LOADS.
9. THE PILE INSTALLATION PROCESS SHOULD BE PERFORMED UNDER THE DIRECTION OF THE GEOTECHNICAL ENGINEER. THE GEOTECHNICAL ENGINEER SHOULD DOCUMENT THE PILE INSTALLATION PROCESS INCLUDING SOIL/ROCK AND GROUNDWATER CONDITIONS ENCOUNTERED, CONSISTENCY WITH EXPECTED CONDITIONS, AND DETAILS OF THE INSTALLED PILE. IN ADDITION, THE PILES DESIGN AND CONSTRUCTION PROCEDURES SHOULD BE REVIEWED AND APPROVED BY THE GEOTECHNICAL ENGINEER OF RECORD PRIOR TO THE START OF CONSTRUCTION.
10. ALL EXISTING ABOVE AND BELOW GROUND STRUCTURES AND UTILITIES AT THE VICINITY OF THE WORK AREA SHOULD BE PROPERLY OBSERVED BEFORE AND DURING THE UNDERGROUND INSTALLATION FOR INDICATION OF MOVEMENT. IF DAMAGE IS OBSERVED, THE WORK SHOULD BE STOPPED.
11. DOB MEMO DATED 06.15.17 INSTRUCTIONS TO BE FOLLOWED IN FULL.

LICENSED STRUCTURAL ENGINEER
Proj 20181732
MICHAEL E HAAS
081-005572
date 10/16/20
STATE OF ILLINOIS
exp. 11/30/20

REV	DATE	BY	DESCRIPTION
4	10-16-2020	MH	ADDENDUM #1
3	07-21-2020	MH	OUC RE-SUBMITTAL
2	06-19-2020	MH	PERMIT RESPONSE
1	01-07-2020	MH	ISSUED FOR BID
0	12-27-19	MH	ISSUED FOR PERMIT

SCALE: AS SHOWN
DATE: 12-27-19
DRAWN: CB
CHECKED: MH
APPROVED: MH

ACEng
www.ac-engineering.com

CLIENT
GREEN ERA SUSTAINABILITY, LLC
ANAEROBIC DIGESTER PROJECT
650 W. 83RD STREET
CHICAGO, IL. 60620
PERMIT APPLICATION No = 100854184 (4)

DESCRIPTION
LOWER LEVEL FOUNDATION PLAN

PROJECT NO:
20181732.0

SHEET:
S-210

STRUCTURAL ENGINEER
GreenbergFarrow
21 South Evergreen Avenue
Suite 200
Arlington Heights, IL 60005
t: 847 788 9200

LaSalle Associates Consulting, Inc.
605 Wildwood Ln, West Chicago, IL 60185
630-293-9022 www.lasalleassoc.com

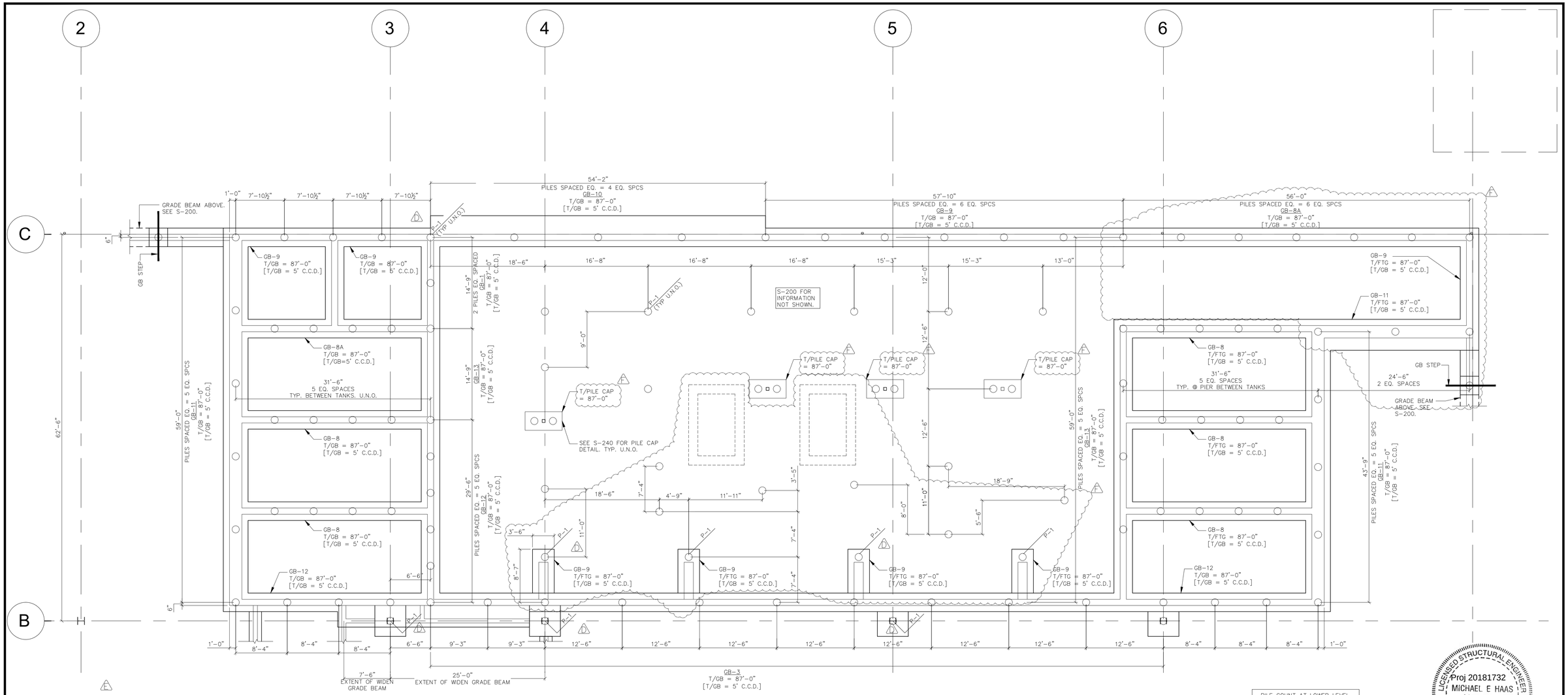

OUC REVIEW NOTES:

DOB REQUIREMENTS SHALL BE FOLLOWED PRIOR TO AND DURING CONSTRUCTION:

a. THE SOIL ALLOWABLE BEARING CAPACITY AND THE POTENTIAL SETTLEMENT OF THE EXISTING AND PROPOSED FOUNDATIONS AS EFFECTED BY THE PROPOSED STRUCTURE AND AS REPORTED OR TO BE REPORTED BY THE GEOTECHNICAL ENGINEER IS CONSIDERED OR TO BE CONSIDERED IN THE STRUCTURAL DESIGN.
b. THE ALLOWABLE BEARING CAPACITY/PRESSURE FOR SHALLOW FOUNDATION SHOULD BE CALCULATED BY THE GEOTECHNICAL ENGINEER OF RECORD WITH A MINIMUM FACTOR OF SAFETY OF 3. THE GEOTECHNICAL ENGINEER OF RECORD SHOULD CONFIRM THAT AFTER UNDERCUT AND BACKFILL (IMPROVED FILL) OR UNDERCUT ALONE (TO NATIVE OR FILL) THE EXISTING FILL SHOULD NOT CARRY A PRESSURE IN EXCESS OF 500 PSF.
c. THE GEOTECHNICAL ENGINEER OF RECORD SHOULD CONFIRM THAT THE PROPOSED SAFE LOAD SHOULD NOT CAUSE PRESSURE ON ANY UNDERLYING SOIL STRATUM IN EXCESS OF MAXIMUM PRESSURES ESTABLISHED IN TABLE 13-132-060(a) AS SET IN SECTION 13-132-060.
d. ANY UNDERGROUND WORK OUTSIDE OF THE PROPOSED WORK SITE PROPERTY LINES WILL REQUIRE ADJACENT PROPERTY OWNER APPROVAL PRIOR TO CONSTRUCTION.
e. NO CONSTRUCTION OR UNDERGROUND WORK SHOULD START BEFORE FINAL RESOLUTION AND COORDINATION WITH ALL THE UTILITY MEMBERS AS PER OUC (OFFICE OF UNDERGROUND COORDINATION) EFP (EXISTING FACILITY PROTECTION) SUBMITTAL REQUIREMENTS INCLUDING BUT NOT LIMITED TO FREIGHT TUNNELS, SEWER, GAS AND WATER LINES, EASEMENTS, NEARLY BRIDGES AND WATERWAYS.
f. EFP EXPIRATION AS PER OUC, OR ANY CHANGE BEYOND WHAT WAS SUBMITTED TO THE OUC EFP FOR THE SUBJECT DOB APPLICATION, WILL REQUIRE A NEW OUC EFP SUBMITTAL AND RESOLUTION PRIOR TO CONSTRUCTION.
g. ANY PERMANENT ENCROACHMENT INTO THE PUBLIC WAY WILL REQUIRE AN APPROVAL GRANT OF PRIVILEGE. NO CONSTRUCTION TO START BEFORE FINAL AND FULL APPROVAL.
h. ALL EXISTING ABOVE AND BELOW GROUND STRUCTURES AND UTILITIES AT THE VICINITY OF THE WORK AREA SHOULD BE PROPERLY OBSERVED BY AN ILLINOIS LICENSED ENGINEER BEFORE AND DURING THE UNDERGROUND WORK FOR INDICATION OF MOVEMENT. IF DAMAGE IS OBSERVED, THE WORK SHOULD BE STOPPED.

DOB PILES REQUIREMENTS (ALL ADDITIONAL RECOMMENDATIONS AND REQUIREMENT BASED ON THE OUC OF CDOT UTILITY MEMBERS, AND THE SOILS REPORT AND FOLLOW UP ADDENDUMS/REPORTS SHOULD ALSO BE FOLLOWED)

1. ALL EXISTING ABOVE AND BELOW GROUND STRUCTURES AND UTILITIES AT THE VICINITY OF THE WORK AREA SHOULD BE OBSERVED DURING THE UNDERGROUND INSTALLATION FOR INDICATION OF MOVEMENT. IF DAMAGE IS OBSERVED, THE WORK SHOULD BE STOPPED.

2. POT-HOLING SHOULD NOT EXTEND BELOW THE ZONE OF INFLUENCE OF THE ADJACENT FOOTING/UTILITIES AS DEFINED BY A LINE EXTENDING DOWNWARD FROM THE FOOTING/UTILITIES BASE AT A 2H-1V SLOPE.

3. PILE INSTALLATION TO START JUST AFTER FULL VARIANCE APPROVAL BY THE STRUCTURAL GROUP OF DOB.
4. BEFORE THE START OF CONSTRUCTION ADDITIONAL BORING WITH QU TESTS AND RQD CORING OF 8 TO 10 FT UNDER THE TIP OF THE PROPOSED PILES WILL BE REQUIRED. THE BORING TO BE WITHIN 15 FT OF EACH OF THE PROPOSED PILES/PILE GROUP. BASED ON THE RESULTS AND USING THE MOST CRITICAL UNDERGROUND CONDITIONS THE GEOTECHNICAL ENGINEER OF RECORD SHOULD ASSIGN A MINIMUM OF ONE LOAD TEST TO COVER EVERY COMBINATION OF PILE AND ASSOCIATED COMPRESSION AND TENSION DESIGN LOAD. THE TEST PILE SHOULD BE CONSTRUCTED WITH THE CONTRACTOR SELECTED PRODUCTION EQUIPMENT.
5. FIELD LOAD TEST TO FOLLOW ASTMD1143 FOR COMPRESSION AND D3698 FOR TENSION.
6. PILES THAT ARE NOT PERMANENTLY CASED SHOULD BE TESTED BY NON-DESTRUCTIVE TESTING (NDT) LIKE FOR EXAMPLE IMPULSE RESPONSE SPECTRUM METHOD (IF APPLICABLE). AFTER CALIBRATING THE NDT WITH THE LOAD TEST ALL OTHER PILES MUST ALSO BE TESTED WITH THE NDT.
7. FOR PILES INVOLVING CONCRETE/GROUTING (LIKE FOR EXAMPLE CAST IN PLACE/AUGER-CAST): THE SELECTED PILES SHOULD BE VERIFIED BY AN ILLINOIS LICENSED P.E. SPECIALIZED IN GEOTECHNICAL ENGINEERING TO HAVE A MINIMUM ALLOWABLE BEARING CAPACITY WITH A FACTOR OF SAFETY OF 2.5. THE PILES SHOULD ONLY BE INSTALLED BY A VERY EXPERIENCED CONTRACTOR WITH AUTOMATED RECORDING EQUIPMENT WHICH DETAILED GROUT PRESSURE, FED RATE ETC. PILES SHOULD BE ALLOWED TO SET OVERNIGHT BEFORE A NEW PILE IS CAST WITHIN 15 FEET. ACTUAL GROUT VOLUME PLACED IN EACH PILE SHOULD BE COMPARED WITH THE THEORETICAL GROUT VOLUME, GIVEN THE PILE LENGTH AND DIAMETER. A GROUT AVERAGE VOLUME SHOULD EXCEED THE THEORETICAL VOLUME OF THE HOLE, BUT NO MORE THAN 30% ABOVE THE THEORETICAL VOLUME. LOAD TEST TO BE PERFORMED ON SACRIFICIAL PILE TO CHECK THE CONTRACTOR'S PROCEDURES AND THE CAPACITY OF THE PILE TO AT LEAST 2.5 THE PROPOSED DESIGN LOAD. THE GEOTECHNICAL ENGINEER OF RECORD SHOULD SPECIFY THE MOST CRITICAL PLACE TO PERFORM THE LOAD TEST/S. THE TEST PILE SHOULD BE CONSTRUCTED WITH THE CONTRACTOR SELECTED PRODUCTION EQUIPMENT.
8. IF NEEDED TO WITHSTAND LATERAL PRESSURE PILES SHOULD BE USED IN PILE GROUPS OF AT LEAST 3 PILES. AN ILLINOIS LICENSED S.E. SHOULD VERIFY THE PILE CAPACITIES FOR LATERAL LOADS.
9. THE PILE INSTALLATION PROCESS SHOULD BE PERFORMED UNDER THE DIRECTION OF THE GEOTECHNICAL ENGINEER. THE GEOTECHNICAL ENGINEER SHOULD DOCUMENT THE PILE INSTALLATION PROCESS INCLUDING SOIL/ROCK AND GROUNDWATER CONDITIONS ENCOUNTERED, CONSISTENCY WITH EXPECTED CONDITIONS, AND DETAILS OF THE INSTALLED PILE. IN ADDITION, THE PILES DESIGN AND CONSTRUCTION PROCEDURES SHOULD BE REVIEWED AND APPROVED BY THE GEOTECHNICAL ENGINEER OF RECORD PRIOR TO THE START OF CONSTRUCTION.
10. ALL EXISTING ABOVE AND BELOW GROUND STRUCTURES AND UTILITIES AT THE VICINITY OF THE WORK AREA SHOULD BE PROPERLY OBSERVED BEFORE AND DURING THE UNDERGROUND INSTALLATION FOR INDICATION OF MOVEMENT. IF DAMAGE IS OBSERVED, THE WORK SHOULD BE STOPPED.
11. DOB MEMO DATED 06.15.17 INSTRUCTIONS TO BE FOLLOWED IN FULL.

PILE COUNT AT LOWER LEVEL	
SIZE	QUANTITY
1-2" ø	116 PILES

NOTES:

1. SEE S-210 FOR STRUCTURAL SLAB INFORMATION.
2. SEE S201 FOR GRADE BEAM SCHEDULE.
3. SEE SHEET S-211 FOR GRADE BEAMS AND PILES LAYOUT.
4. SEE SHEET S-100 FOR GENERAL NOTES AND LOADING PLANS.
5. ALL ELEVATIONS REFERENCED FROM FINISH FLOOR ELEVATION OF 100'-0" FOR REFERENCE ONLY. SEE SITE PLAN FOR ACTUAL FINISH FLOOR ELEVATION.
6. CONTRACTOR TO PREPARE SUBGRADE FOR BUILDING PAD AND PAVING AREAS PER GEOTECHNICAL ENGINEER'S REPORT AND RECOMMENDATIONS.
7. SEE CIVIL DRAWINGS FOR GRADES AND ADDITIONAL INFORMATION.
8. FOR TYPICAL REINFORCING LAPS AT CORNERS/INTERSECTIONS OF GRADE BEAMS SEE S-230.
9. PILES SHALL HAVE THE REQUIRED TON CAPACITY NOTED ON SHEET S-201.

0' 10' 20' 40'

SCALE: 1"=20'

LOWER LEVEL - PILES LAYOUT PLAN

1/8" = 1'-0"

1 S-211

LICENSED STRUCTURAL ENGINEER
Proj 20181732
MICHAEL E HAAS
081-005572
date 10/16/20
STATE OF ILLINOIS
exp. 11/30/20

STRUCTURAL ENGINEER
GreenbergFarrow
21 South Evergreen Avenue
Suite 200
Arlington Heights, IL 60005
t: 847 788 9200

LaSalle Associates Consulting, Inc.
605 Wildwood Ln, West Chicago, IL 60185
630-293-9022 www.lasalleassoc.com

REV.	DATE	BY	DESCRIPTION
4	10-16-2020	MH	ADDENDUM #1
3	07-21-2020	MH	OUC RE-SUBMITTAL
2	06-19-2020	MH	PERMIT RESPONSE
1	01-07-2020	MH	ISSUED FOR BID
A	12-27-19	MH	ISSUED FOR PERMIT

SCALE: AS SHOWN
DATE: 12-27-19
DRAWN: CB
CHECKED: MH
APPROVED: MH

ACEng
www.ac-engineering.com

CLIENT
GREEN ERA SUSTAINABILITY, LLC
ANAEROBIC DIGESTER PROJECT
650 W. 83RD STREET
CHICAGO, IL. 60620
PERMIT APPLICATION No = 100854184 4

DESCRIPTION
LOWER LEVEL PILES LAYOUT PLAN

PROJECT NO:
20181732.0

SHEET:
S-211

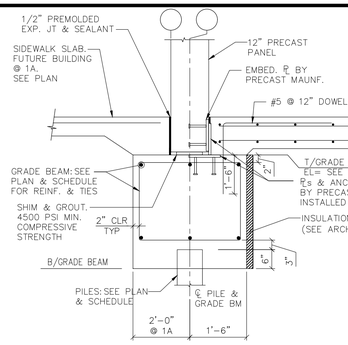

1/1A S-220 SECTION
SCALE: 1/2" = 1'-0"

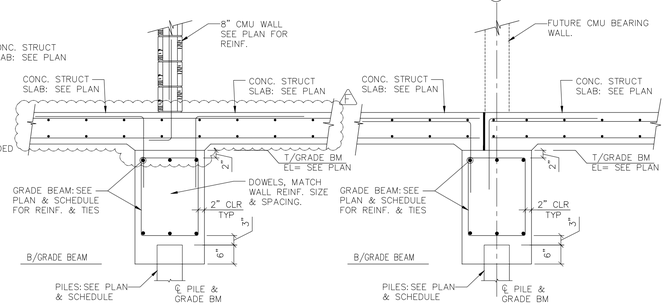

2 S-220 SECTION AT CMU WALL
SCALE: 1/2" = 1'-0"

2A S-220 SECTION AT CMU WALL
SCALE: 1/2" = 1'-0"

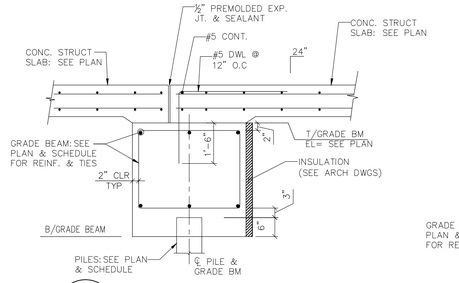

3 S-220 SECTION
SCALE: 1/2" = 1'-0"

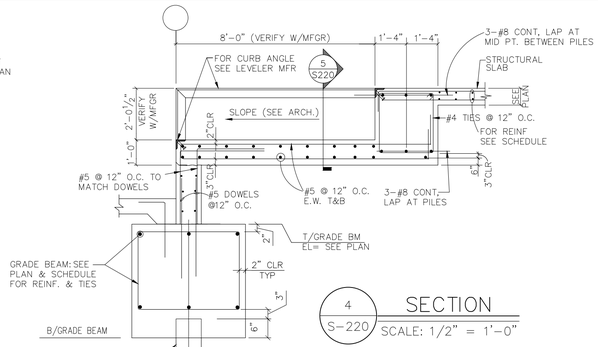

4 S-220 SECTION
SCALE: 1/2" = 1'-0"

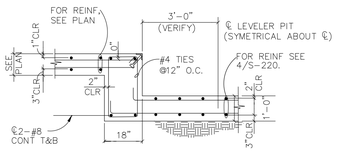

LEVELER PIT NOTES:
1. FOR DIMENSIONS, ANCHOR BOLTS, CURB ANGLE, INSERT BUMPERS ETC. SEE MFGR DRAWINGS. AND SPECIFICATIONS DOCK LEVELER SHALL BE INSTALLED
2. PER MANUFACTURERS DWGS. & SPECS.

5 S-220 SECTION ACROSS DOCK LEVELER PIT
SCALE: 1/2" = 1'-0"

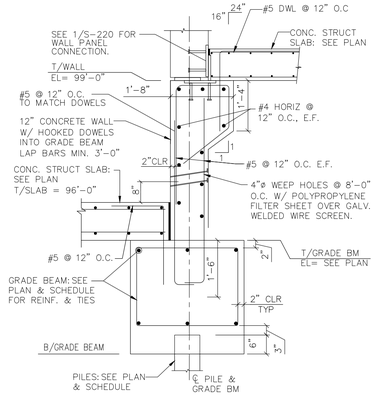

6 S-220 TYP WALL FOUNDATION @ LOADING DOCK WALL
SCALE: 1/2" = 1'-0"

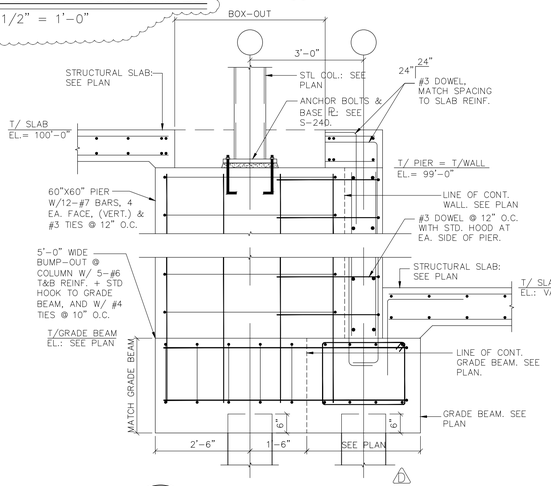

7 S-220 SECTION
SCALE: 1/2" = 1'-0"

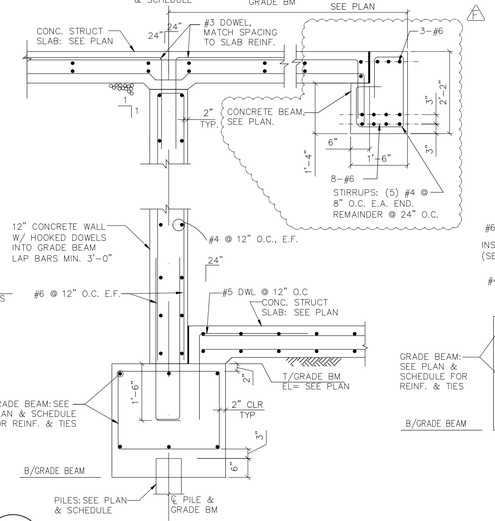

8 S-220 SECTION
SCALE: 1/2" = 1'-0"

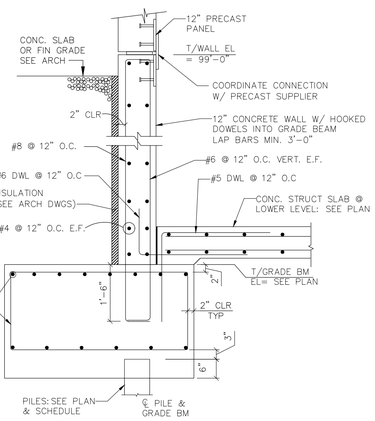

9 S-220 SECTION
SCALE: 1/2" = 1'-0"

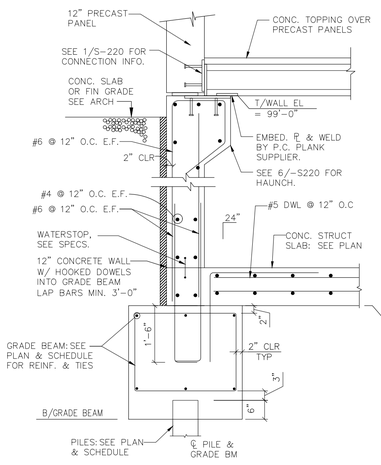

10 S-220 SECTION
SCALE: 1/2" = 1'-0"

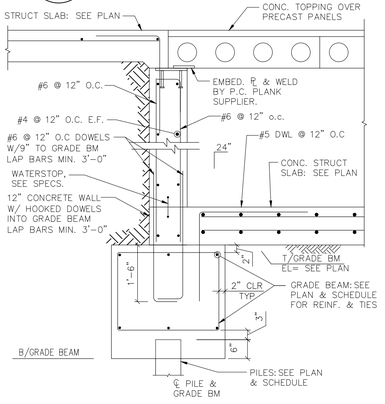

11 S-220 SECTION AT TANKS
SCALE: 1/2" = 1'-0"

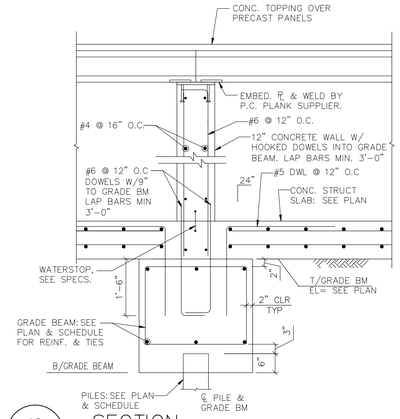

12 S-220 SECTION
SCALE: 1/2" = 1'-0"

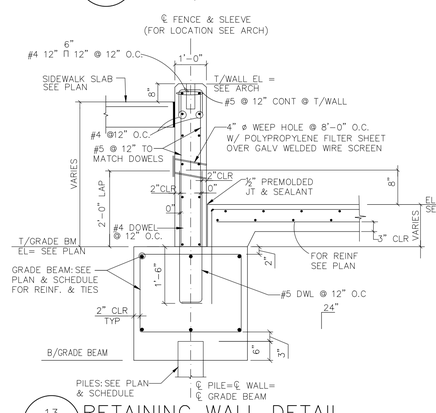

13 S-220 RETAINING WALL DETAIL
SCALE: 1/2" = 1'-0"

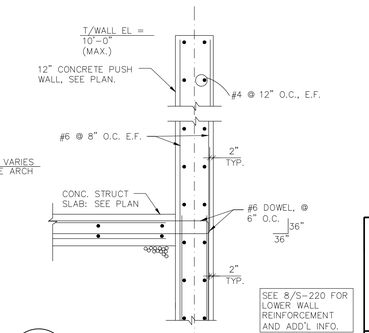

14 S-220 SECTION
SCALE: 1/2" = 1'-0"

LICENSED STRUCTURAL ENGINEER
Proj 20181732
MICHAEL E HAAS
081-005572
date 10/16/20
STATE OF ILLINOIS
exp. 11/30/20

STRUCTURAL ENGINEER
GreenbergFarrow
21 South Evergreen Avenue
Suite 200
Arlington Heights, IL 60005
t: 847 788 9200

LaSalle Associates Consulting, Inc.
605 Wildwood Ln, West Chicago, IL 60185
630-293-9022 www.lasalleassoc.com

REV	DATE	BY	DESCRIPTION
6	10-16-2020	MH	ADDENDUM #1
5	07-21-2020	MH	OUC RE-SUBMITTAL
4	06-19-2020	MH	PERMIT RESPONSE
3	01-07-2020	MH	ISSUED FOR BID
2	12-27-19	MH	ISSUED FOR PERMIT
1			

SCALE:	AS SHOWN
DATE:	12-27-19
DRAWN:	CB
CHECKED:	MH
APPROVED:	MH

ACEng
www.ac-engineering.com

CLIENT	DESCRIPTION
GREEN ERA SUSTAINABILITY, LLC ANAEROBIC DIGESTER PROJECT 650 W. 83RD STREET CHICAGO, IL. 60620 PERMIT APPLICATION No = 100854184 6	FOUNDATION DETAILS --- --- ---

PROJECT NO: 20181732.0

SHEET: S-220

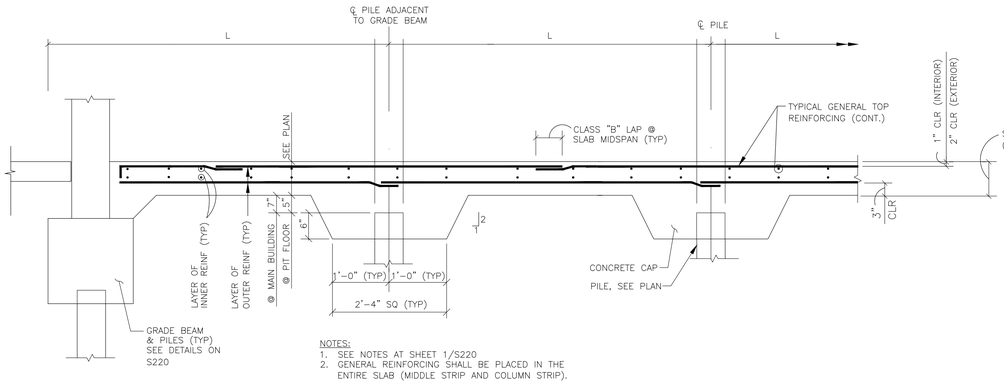

NOTES:
1. SEE NOTES AT SHEET 1/S220
2. GENERAL REINFORCING SHALL BE PLACED IN THE ENTIRE SLAB (MIDDLE STRIP AND COLUMN STRIP).

1 / S-230 STRUCTURAL SLAB REINFORCING DETAIL
SCALE: 1/2" = 1'-0"

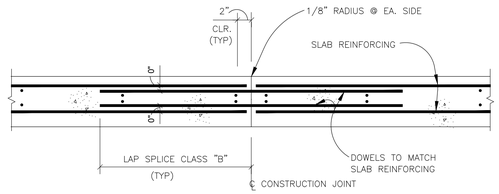

NOTE:
PLACE ℄ CONSTRUCTION JOINT AT 1/4x(SPAN) BETWEEN ℄ PILES

2 / S-230 STRUCT. SLAB CONSTRUCTION JOINT
SCALE: 1/2" = 1'-0"

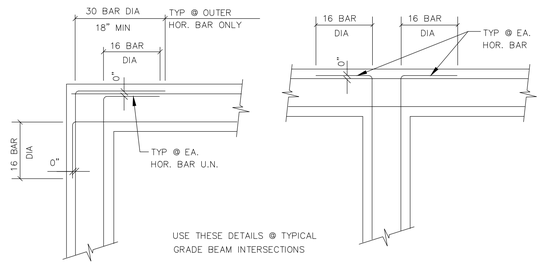

USE THESE DETAILS @ TYPICAL GRADE BEAM INTERSECTIONS

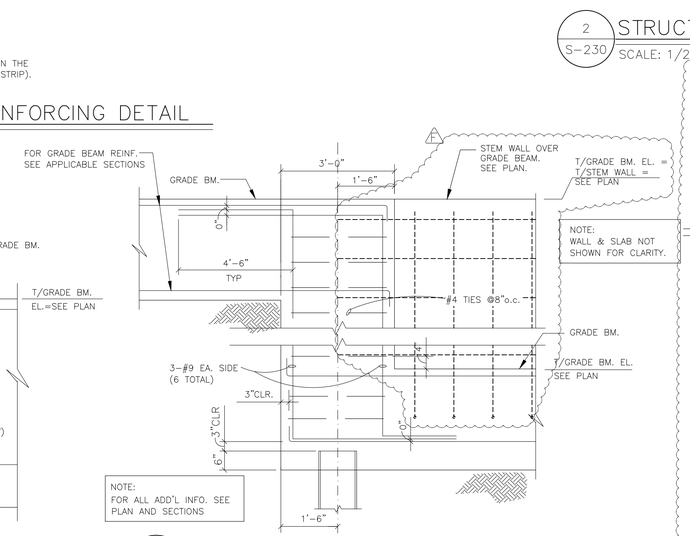

5 / S-230 SECTION
SCALE: 1" = 1'-0"

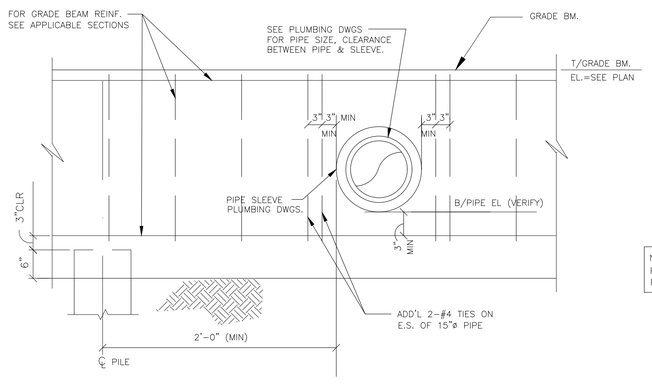

4 / S-230 SECTION
SCALE: 1/2" = 1'-0"

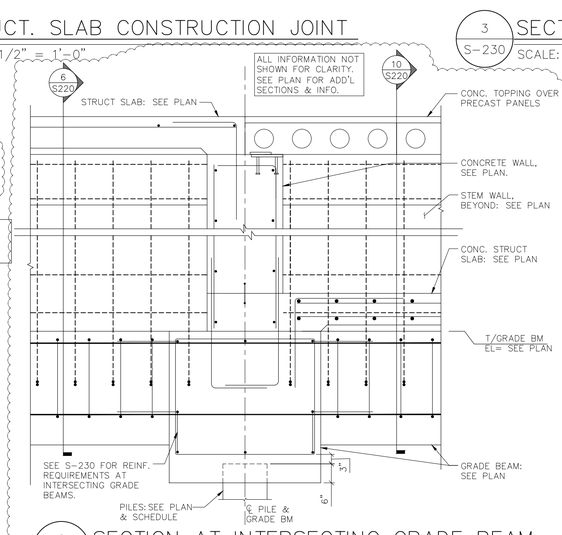

6 / S-230 SECTION AT INTERSECTING GRADE BEAM
SCALE: 1/2" = 1'-0"

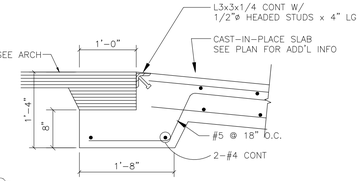

3 / S-230 SECTION
SCALE: 1/2" = 1'-0" PAVING, SEE ARCH

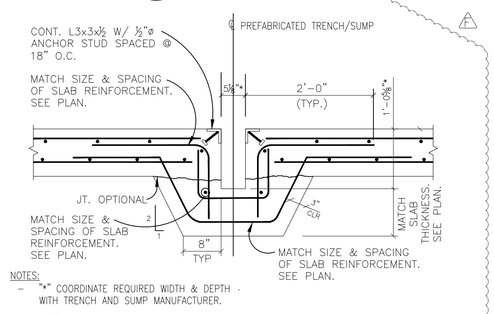

7 / S-230 SECTION
SCALE: 3/4" = 1'-0"

NOTES:
- "*" COORDINATE REQUIRED WIDTH & DEPTH WITH TRENCH AND SUMP MANUFACTURER.

8 / S-230 SECTION AT TRENCH & SUMP
SCALE: 3/4" = 1'-0"

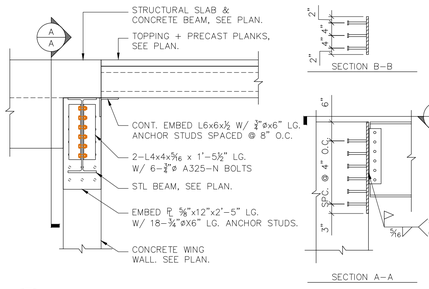

9 / S-230 SECTION AT WF BEAM SUPPORT
SCALE: 1/2" = 1'-0"

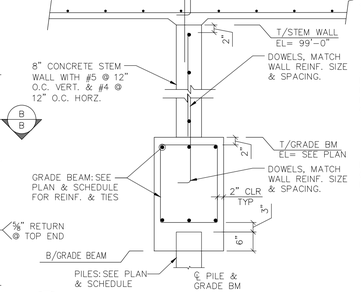

10 / S-230 SECTION AT STEM WALL
SCALE: 1/2" = 1'-0"

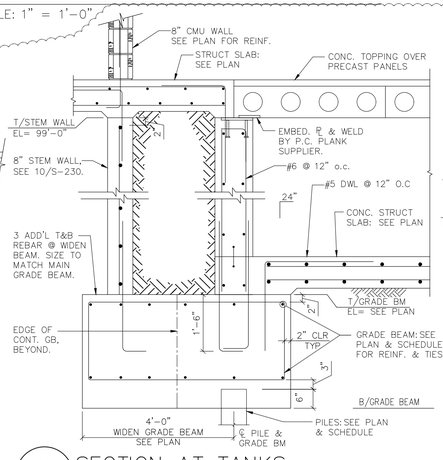

11 / S-230 SECTION AT TANKS
SCALE: 1/2" = 1'-0"

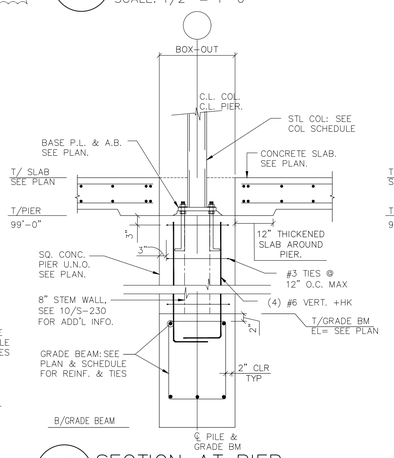

12 / S-230 SECTION AT PIER
SCALE: 1/2" = 1'-0"

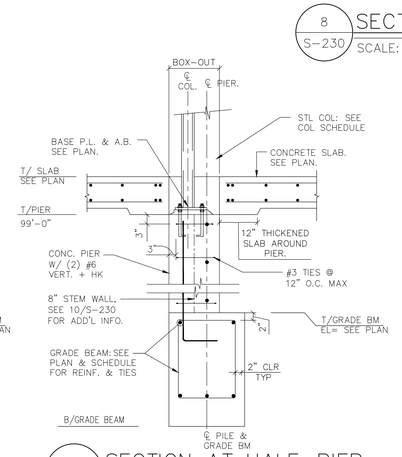

13 / S-230 SECTION AT HALF-PIER
SCALE: 1/2" = 1'-0"

REV	DATE	BY	DESCRIPTION
5	10-16-2020	MH	ADDENDUM #1
4	07-21-2020	MH	OUC RE-SUBMITTAL
3	06-19-2020	MH	PERMIT RESPONSE
2	01-07-2020	MH	ISSUED FOR BID
1	12-27-19	MH	ISSUED FOR PERMIT

SCALE:	AS SHOWN
DATE:	12-27-19
DRAWN:	CB
CHECKED:	MH
APPROVED:	MH

ACEng
www.ac-engineering.com

CLIENT
GREEN ERA SUSTAINABILITY, LLC
ANAEROBIC DIGESTER PROJECT
650 W. 83RD STREET
CHICAGO, IL. 60620
PERMIT APPLICATION No = 100854184 (5)

DESCRIPTION
FOUNDATION DETAILS

PROJECT NO:
20181732.0

SHEET:
S-230

LICENSED STRUCTURAL ENGINEER
Proj 20181732
MICHAEL E HAAS
081-005572
date 10/16/20
STATE OF ILLINOIS
exp. 11/30/20

STRUCTURAL ENGINEER
GreenbergFarrow
21 South Evergreen Avenue
Suite 200
Arlington Heights, IL 60005
t: 847 788 9200

LaSalle Associates Consulting, Inc.
605 Wildwood Ln, West Chicago, IL 60185
630-293-9022 www.lasalleassoc.com

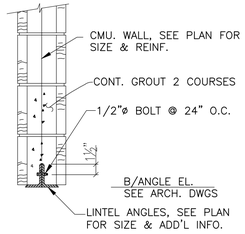

NOTES:
- PROVIDE SOLID JAMB AT BEARINGS.

1 S-240 LOOSE LINTEL DETAIL
SCALE: 3/4" = 1'-0"

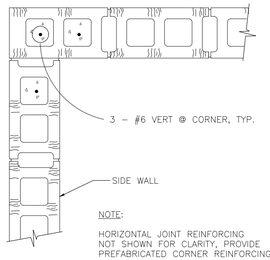

NOTE:
HORIZONTAL JOINT REINFORCING NOT SHOWN FOR CLARITY, PROVIDE PREFABRICATED CORNER REINFORCING.

2 S-240 SECTION
SCALE: 3/4" = 1'-0"

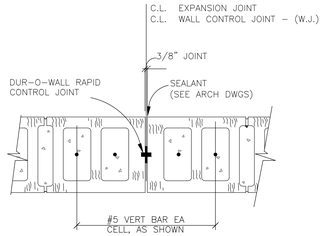

NOTES:
1. JOINT SHALL BE CONTINUOUS WITHOUT INTERRUPTION FROM FOUNDATION TO TOP OF WALL.
2. HORIZONTAL REINFORCING AND BOND BEAMS SHALL BE DISCONTINUOUS AT WALL JOINT.
3. DO NOT LOCATE OVER OPENING.
4. SEE GENERAL NOTES ON S-100 FOR SPACING REQUIREMENTS & ADD'L INFO.
5. COORD. LOCATION OF JOINTS WITH ARCH DWGS

3 S-240 SECTION
SCALE: 3/4" = 1'-0"

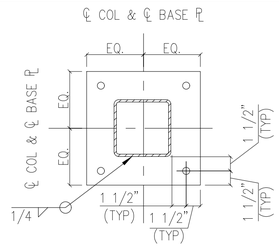

NOTE:
SEE COLUMN SCHEDULE FOR COLUMN BASE PLATE AND ANCHOR BOLT SIZES. SEE DETAIL 5/S-240 FOR ANCHOR BOLT LENGTHS.

4 S-240 SECTION
SCALE: N.T.S.

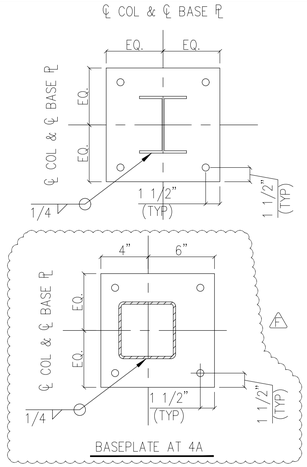

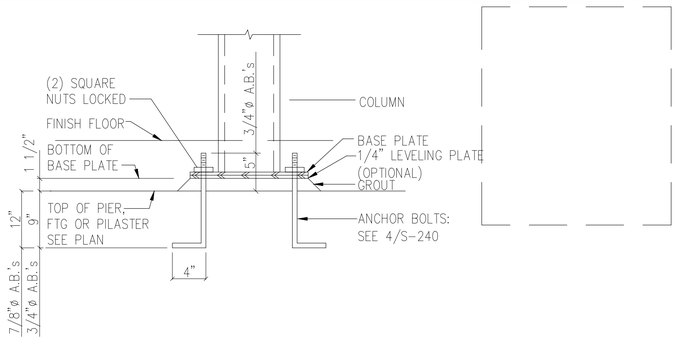

5 S-240 SECTION
SCALE: N.T.S.

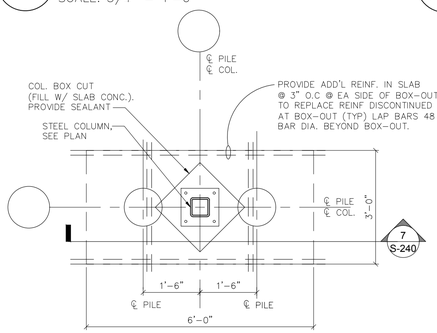

6 S-240 PILE CAP - PLAN VIEW
SCALE: 1/2" = 1'-0"

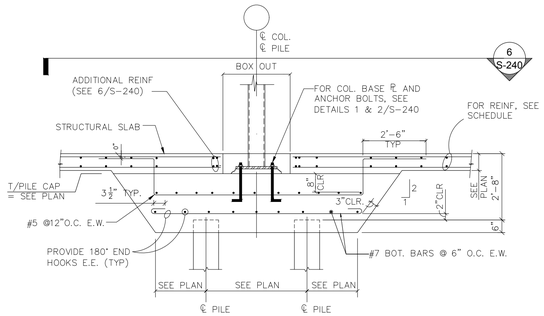

7 S-240 PILE CAP SECTION
SCALE: 1/2" = 1'-0"

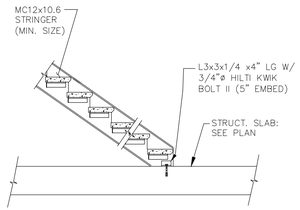

NOTES:
1. LANDING, TREADS & RISERS TO BE PROVIDED BY STAIR MANUFACTURER.

8 S-240 STAIRS DETAIL
SCALE: 1/2" = 1'-0"

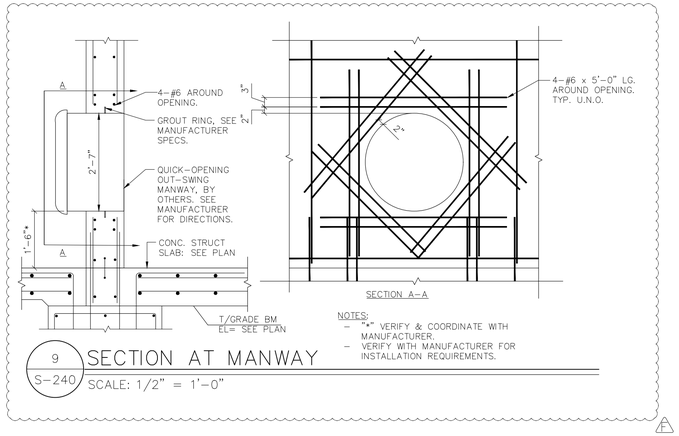

NOTES:
- "*" VERIFY & COORDINATE WITH MANUFACTURER.
- VERIFY WITH MANUFACTURER FOR INSTALLATION REQUIREMENTS.

9 S-240 SECTION AT MANWAY
SCALE: 1/2" = 1'-0"

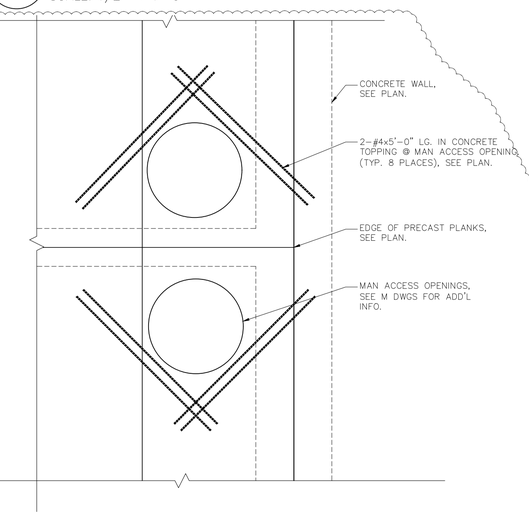

10 S-240 SECTION AT MANHOLES
SCALE: 1/2" = 1'-0"

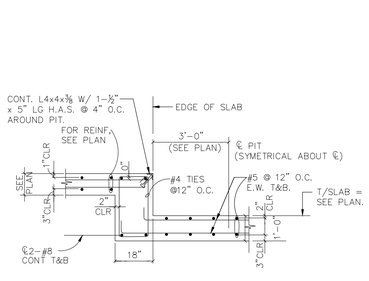

11 S-240 SECTION ACROSS PIT
SCALE: 1/2" = 1'-0"

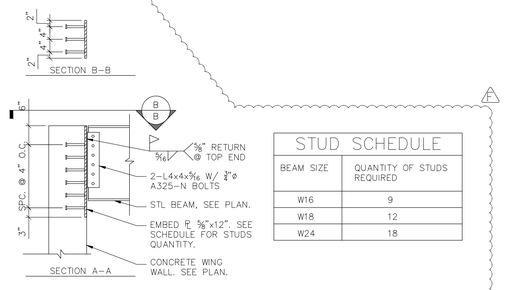

STUD SCHEDULE	
BEAM SIZE	QUANTITY OF STUDS REQUIRED
W16	9
W18	12
W24	18

12 S-240 SECTION AT WF BEAM SUPPORT
SCALE: 1/2" = 1'-0"

STRUCTURAL ENGINEER
GreenbergFarrow
21 South Evergreen Avenue
Suite 200
Arlington Heights, IL 60005
t: 847 788 9200

LaSalle Associates Consulting, Inc.
605 Wildwood Ln, West Chicago, IL 60185
630-293-9022 www.lasalleassoc.com

REV	DATE	BY	DESCRIPTION
7	10-16-2020	MH	ADDENDUM #1
6	07-21-2020	MH	OUC RE-SUBMITTAL
5	06-19-2020	MH	PERMIT RESPONSE
4	01-07-2020	MH	ISSUED FOR BID
3	12-27-19	MH	ISSUED FOR PERMIT

SCALE: AS SHOWN
DATE: 12-27-19
DRAWN: CB
CHECKED: MH
APPROVED: MH

ACEng
www.ac-engineering.com

CLIENT
GREEN ERA SUSTAINABILITY, LLC
ANAEROBIC DIGESTER PROJECT
650 W. 83RD STREET
CHICAGO, IL. 60620
PERMIT APPLICATION No = 100854184 7

DESCRIPTION
FOUNDATION AND CMU DETAILS

PROJECT NO:
20181732.0

SHEET:
S-240

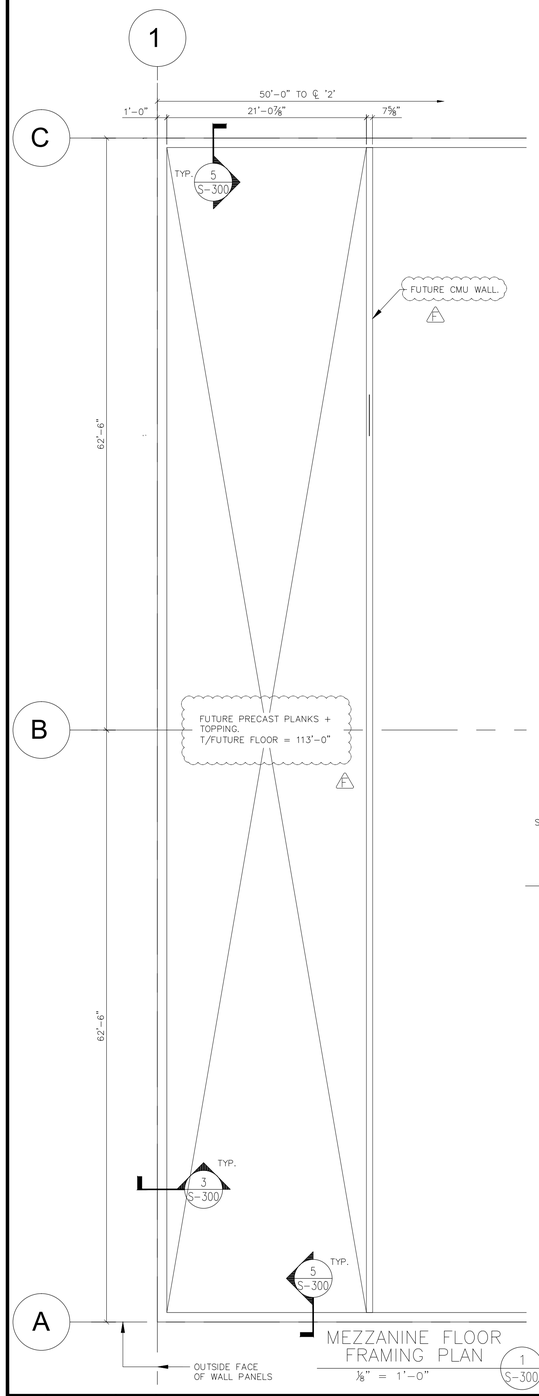

MEZZANINE FLOOR FRAMING PLAN

⅛" = 1'-0"

1 S-300

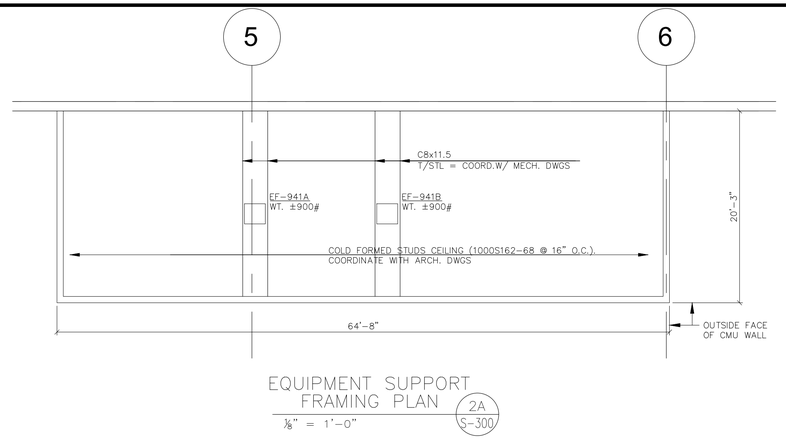

EQUIPMENT SUPPORT FRAMING PLAN

⅛" = 1'-0"

2A S-300

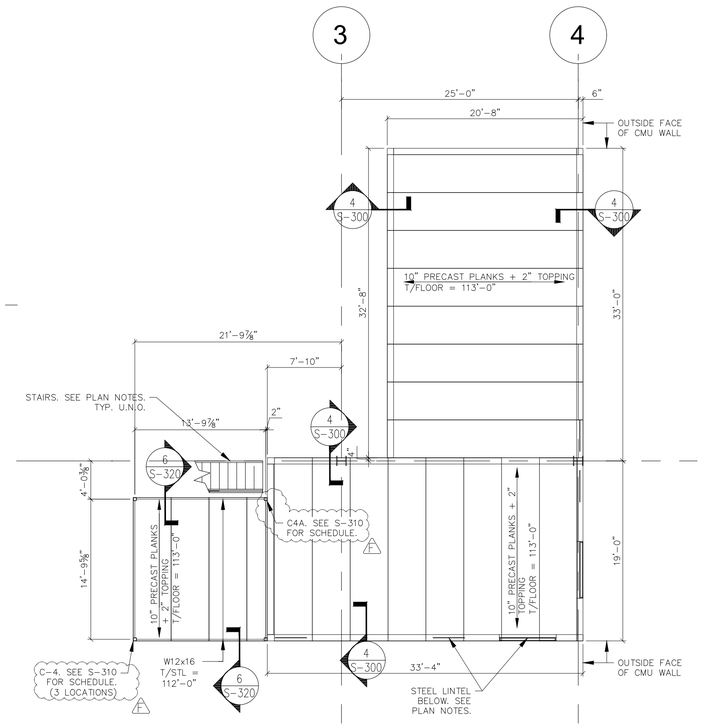

MEZZANINE FLOOR FRAMING PLAN

⅛" = 1'-0"

2 S-300

NOTES:

1. SEE SHEET S-100 FOR GENERAL NOTES AND LOADING PLANS.
2. ALL ELEVATIONS REFERENCED FROM FINISH FLOOR ELEVATION OF 100'-0" FOR REFERENCE ONLY. SEE SITE PLAN FOR ACTUAL FINISH FLOOR ELEVATION.
3. SEE SPECIFICATIONS FOR ALL FLOOR SLAB FINISHES.
4. 2-L6x3½x⅜ (LONG LEG BACK-TO-BACK) LINTEL. SEE S-240 FOR TYPICAL DETAILS. SEE ARCH. DRAWINGS FOR EXTENT AND ADDITIONAL INFORMATION.
5. CONCRETE TOPPING TO BE REINFORCED W/ 6X6- W2.1 X W2.1 W.W.F.
6. SEE S-240 FOR TYPICAL CMU WALL DETAILS.
7. SEE S-240 FOR STAIR FRAMING DETAIL.

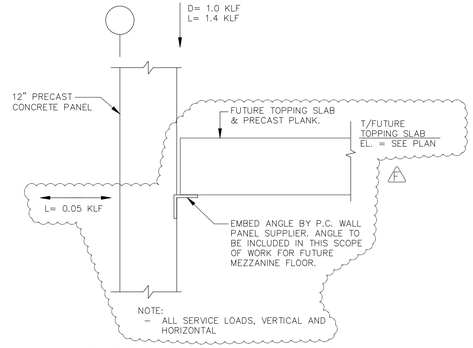

3 S-300 FLOOR PLANK BEARING ON P.C. WALL DETAIL

SCALE: 3/4" = 1'-0"

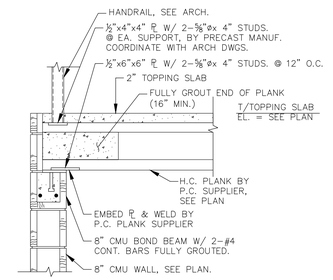

4 S-300 FLOOR PLANK BEARING ON CMU WALL DETAIL

SCALE: 3/4" = 1'-0"

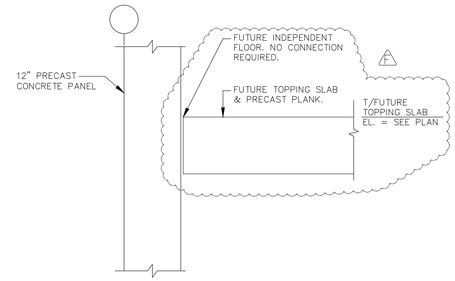

5 S-300 DETAIL

SCALE: 3/4" = 1'-0"

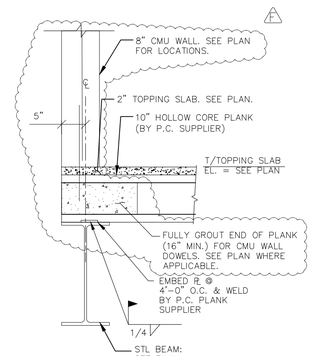

6 S-300 FLOOR PLANK BEARING ON P.C. WALL DETAIL

SCALE: 3/4" = 1'-0"

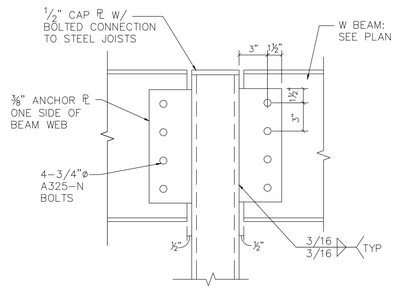

7 S-300 TYP. BEAM TO COL. DETAIL

SCALE: 1 1/2" = 1'-0"

STRUCTURAL ENGINEER

GreenbergFarrow

21 South Evergreen Avenue
Suite 200
Arlington Heights, IL 60005
t: 847 788 9200

LaSalle Associates Consulting, Inc.

605 Wildwood Ln. West Chicago, IL 60185
630-293-9022 www.lasalleassoc.com

REV	DATE	BY	DESCRIPTION
5	10-16-2020	MH	ADDENDUM #1
4	07-21-2020	MH	OUC RE-SUBMITTAL
3	06-19-2020	MH	PERMIT RESPONSE
2	01-07-2020	MH	ISSUED FOR BID
1	12-27-19	MH	ISSUED FOR PERMIT

SCALE:	AS SHOWN
DATE:	12-27-19
DRAWN:	CB
CHECKED:	MH
APPROVED:	MH

ACEng
www.ac-engineering.com

CLIENT
GREEN ERA SUSTAINABILITY, LLC
ANAEROBIC DIGESTER PROJECT
650 W. 83RD STREET
CHICAGO, IL. 60620
PERMIT APPLICATION No = 100854184 5

DESCRIPTION
MEZZANINE FRAMING PLAN

PROJECT NO: 20181732.0

SHEET: S-300

ROOF PLAN NOTES

1. SEE SHEET S-100 FOR GENERAL NOTES & LOADING PLANS.
2. T.O.S. = TOP OF STEEL = BOTTOM OF DECK. Δ1
3. METAL ROOF DECK SHALL BE 36" WIDE, 1 1/2" DEEP, (GALVANIZED) TYPE B WIDE RIB ROOF DECK. FOR DIAPHRAGM FASTENING TO FRAMING MEMBERS AND DECK GAGE SEE SCHEDULE.
4. STEEL JOIST CAMBER SHALL BE PROVIDED AND SHALL CONFORM TO THE SJI SPECIFICATIONS.
5. APPROXIMATE TOTAL WEIGHTS OF ROOF TOP EQUIPMENT ARE SHOWN ON PLAN. VERIFY ALL LOADS, LOCATIONS, CURB SIZES AND OPENING SIZES WITH MECHANICAL CONTRACTOR PRIOR TO FABRICATION. SEE TYPICAL RTU SUPPORT DETAIL FOR FRAMING ON S-320.
6. JOIST BRIDGING SHALL BE PROVIDED IN ACCORDANCE WITH THE SJI SPECIFICATION. IF THE CROSS BRIDGING, HORIZONTAL BRIDGING OR/AND UPLIFT BRIDGING IS INTERRUPTED BY AN OBSTRUCTION, ADDITIONAL BRIDGING SHALL BE PLACED PER DIRECTION OF THE JOIST SUPPLIER.
7. SEE S-320 FOR TYPICAL RTU STEEL FRAMING, ROOF OPENINGS DETAIL, AND HUNG MECHANICAL UNITS (AH) SUPPORT FRAME.
8. ALL NOTED LOADS ARE SERVICE LOADS. Δ1

NOTE:
VERIFY ALL ELEVATIONS WITH ARCHITECTURAL DRAWINGS.

LEGEND

RTU MK.
RTU WT.
COL. MK.
HVAC ROOF TOP UNIT
COLUMN

ROOF DIAPHRAGM DIAGRAM SCHEDULE

ZONE	NO/CONNECTORS TO STL SUPPORT PER 36" WIDE DECK	NO/SIDELAP SCREWS BETWEEN STL SUPPORTS
①	7	4
②	7	5
③	7	6
④	7	7

NOTES:
1. THE CONTRACTOR SHALL PROPERLY INSTALL SIDE LAP SCREWS PER MANUFACTURER'S SPECIFICATIONS SO THE SCREWS DEVELOP SHEAR AS LISTED IN STEEL DECK INSTITUTE DESIGN MANUAL, SECOND EDITION.
2. AT LEDGER AT THE PERIMETER OF BLDG SHALL BE CONNECTED @ 6" O.C.
3. SEE GENERAL NOTES FOR CONNECTORS SIZE.

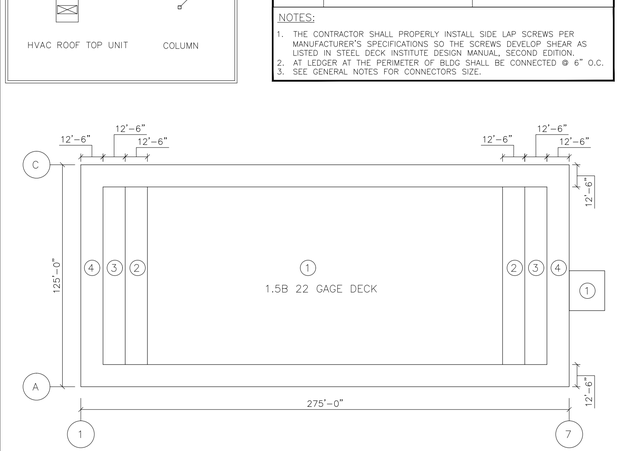

ROOF DIAPHRAGM PLAN
NOT TO SCALE

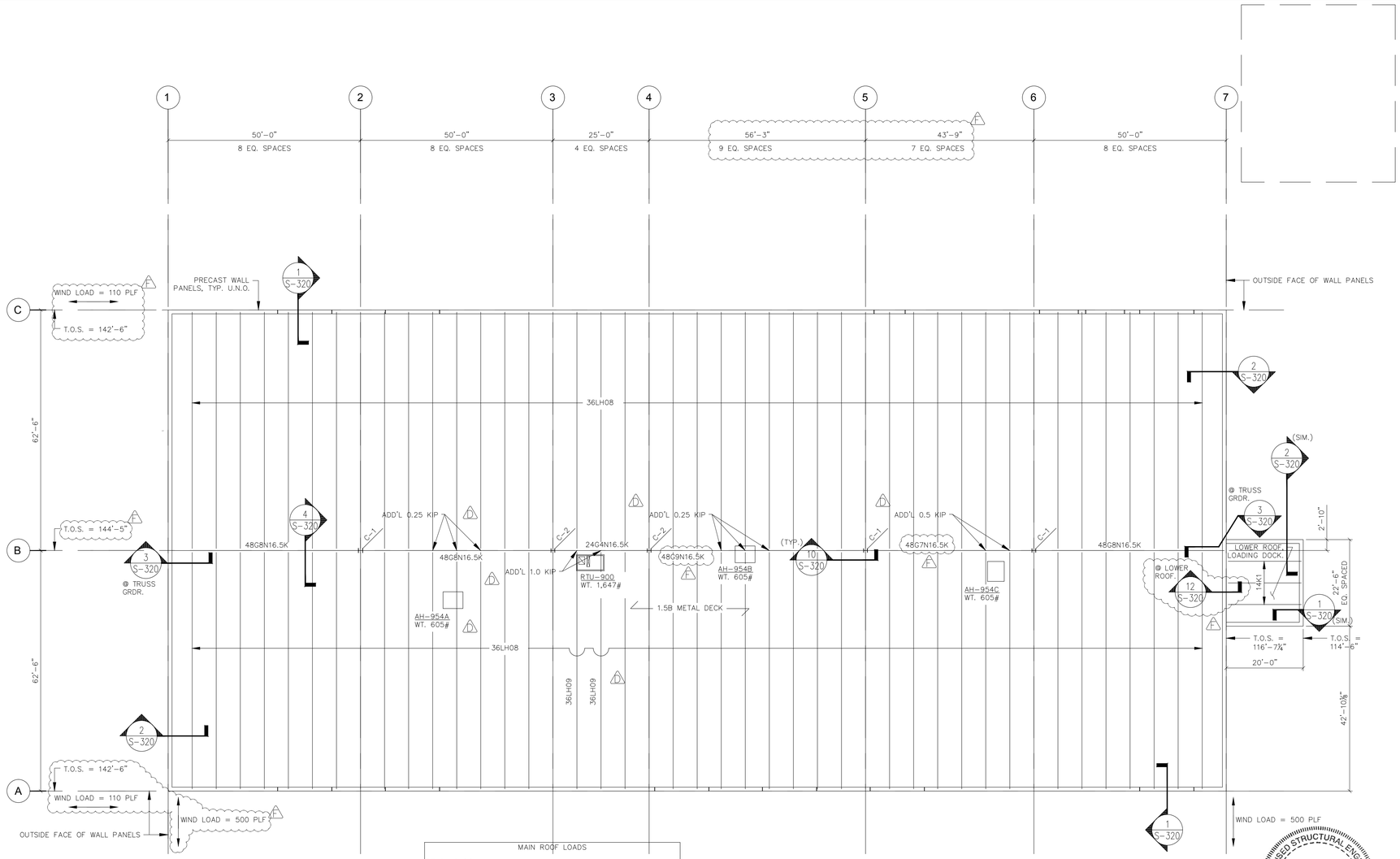

0' 10' 20' 40'
SCALE: 1"=20'

FRAMING PLAN (1/S-310)
3/16" = 1'-0"

MAIN ROOF LOADS

DEAD LOADS		
MEMBRANE (UNBALLASTED)	=	1.0 PSF
INSULATION	=	3.0 PSF
METAL DECK	=	2.0 PSF
JOISTS	=	3.0 PSF
GIRDERS	=	2.0 PSF
MECH. /ELEC. /FIRE PROT. /MISC.	=	5.0 PSF
TOTAL DEAD LOAD	=	16.0 PSF
SNOW LOADS		
GROUND SNOW LOAD, Pg	=	25 PSF
ROOF SNOW LOAD, Pf	=	25 PSF

COLUMN SCHEDULE

C-#	SIZE	BASE PLATE	ANCHOR BOLTS
C-1	W14x90	20" x 22" x 1"	(4) – ⅞" ø
C-2	W12x79	17" x 20" x 1"	(4) – ⅞" ø
C-3	HSS8x8x¼	14" x 14" x 1"	(4) – ¾" ø
C-4	HSS4x4x¼	10" x 10" x ¾"	(4) – ¾" ø
C-4A	HSS4x4x¼	10" x 10" x ¾"	(4) – ¾" ø

LICENSED STRUCTURAL ENGINEER
Proj 20181732
MICHAEL E HAAS
081-005572
date 10/16/20
STATE OF ILLINOIS
exp. 11/30/20

STRUCTURAL ENGINEER
GreenbergFarrow
21 South Evergreen Avenue
Suite 200
Arlington Heights, IL 60005
t: 847 788 9200

LaSalle Associates Consulting, Inc.
605 Wildwood Ln, West Chicago, IL 60185
630-293-9022 www.lasalleassoc.com

REV	DATE	BY	DESCRIPTION
Δ1	10-16-2020	MH	ADDENDUM #1
Δ	07-21-2020	MH	OUC RE-SUBMITTAL
Δ	06-19-2020	MH	PERMIT RESPONSE
Δ	01-07-2020	MH	ISSUED FOR BID
Δ	12-27-19	MH	ISSUED FOR PERMIT

SCALE: AS SHOWN
DATE: 12-27-19
DRAWN: CB
CHECKED: MH
APPROVED: MH

ACEng
www.ac-engineering.com

CLIENT
GREEN ERA SUSTAINABILITY, LLC
ANAEROBIC DIGESTER PROJECT
650 W. 83RD STREET
CHICAGO, IL. 60620
PERMIT APPLICATION No = 100854184 Δ1

DESCRIPTION
ROOF FRAMING PLAN

PROJECT NO:
20181732.0

SHEET:
S-310

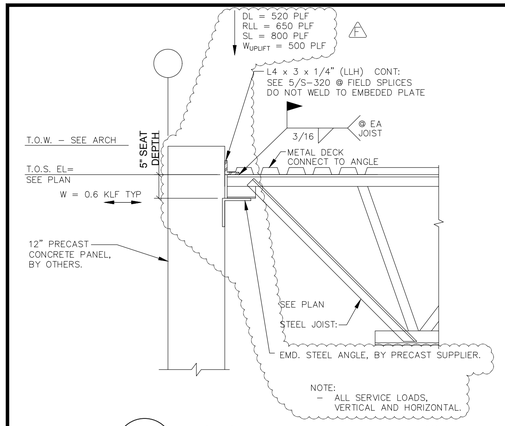

1 S-320 **JST TO BRNG WALL DETAIL**
SCALE: 3/4" = 1'-0"

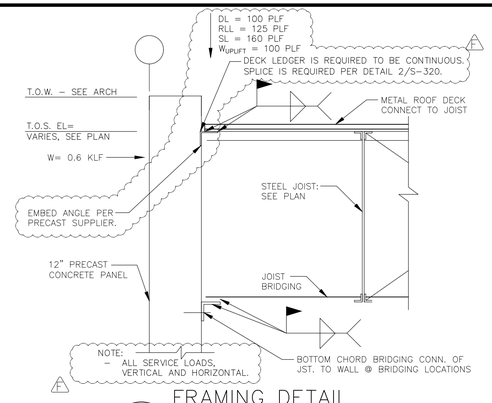

2 S-320 **FRAMING DETAIL PARALLEL TO JOIST**
SCALE: 3/4" = 1'-0"

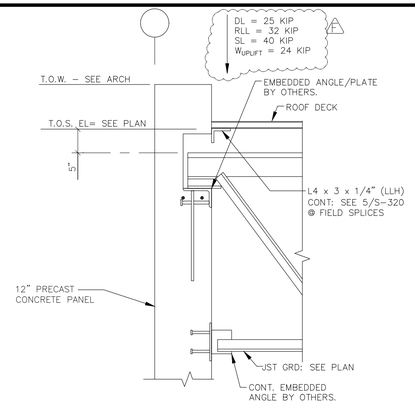

3 S-320 **TRUSS GIRDER CONNECTION**
SCALE: 3/4" = 1'-0"

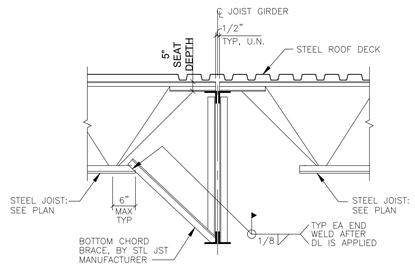

4 S-320 **JST TO TRUSS GIRDER SECTION**
SCALE: 3/4" = 1'-0"

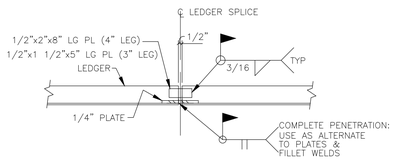

5 S-320 **LEDGER SPLICE DETAIL**
SCALE: 3/4" = 1'-0"

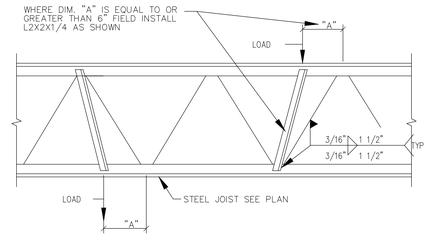

6 S-320 **TYP. JOIST LOAD STRUT DETAIL**
SCALE: 1/8" = 1'-0"

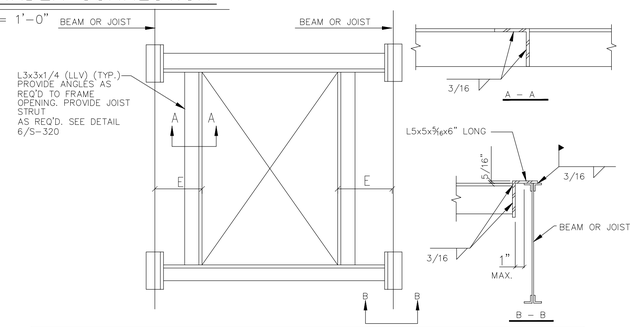

NOTE:
TYP. ROOF OPENING DETAIL SHOWN APPLIES TO ALL ROOF OPENINGS WHERE LEAST DIMENSION IS 13" OR LARGER. REINFORCE ROOF OPENINGS LESS THAN 13" BY ATTACHING 16 GAGE SHEET METAL 1'-0" WIDER THAN OPENING TO METAL ROOF DECK. WHERE DIMENSION "E" IS LESS THAN 6" ANGLE MAY BE OMITTED.

7 S-320 **TYPICAL ROOF OPENING**
SCALE: 1/8" = 1'-0"

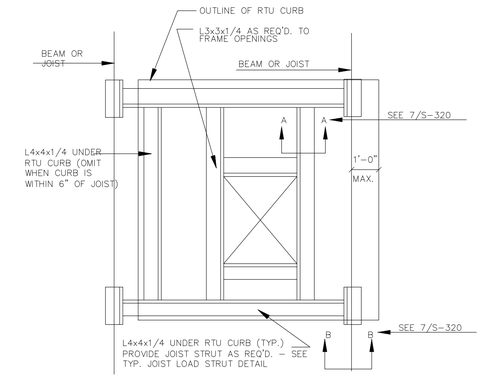

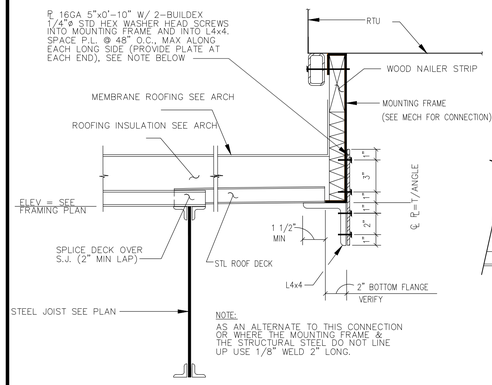

9 S-320 **TYPICAL HVAC CURB SUPPORT DETAIL**
SCALE: 3/16" = 1'-0"

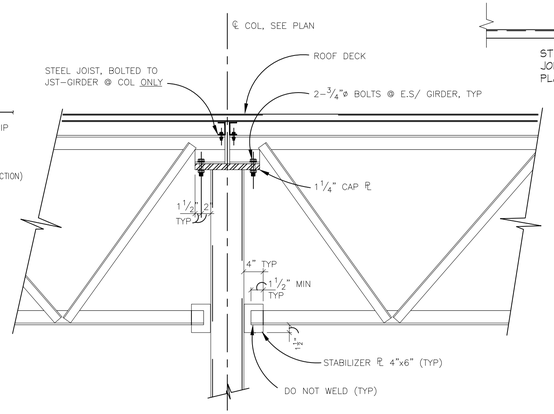

10 S-320 **TYP. GIRDER TO COL. CONNECTION**
SCALE: 3/4" = 1'-0"

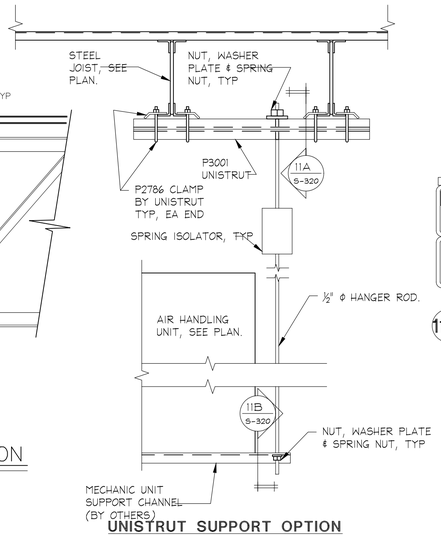

UNISTRUT SUPPORT OPTION

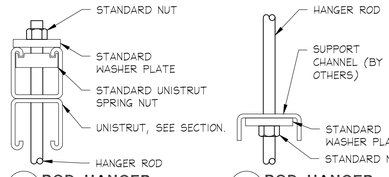

11A **ROD HANGER** N.T.S.

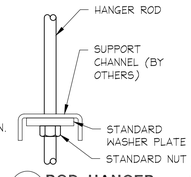

11B **ROD HANGER** N.T.S.

ALL UNISTRUT MATERIALS AND CONNECTIONS SHALL BE INSTALLED WITH STRICT CONFORMANCE TO MANUFACTURER'S RECOMMENDATIONS

11 S-320 **HANGING UNIT SECTION**
SCALE: 1" = 1'-0"

8 S-320 **TYPICAL RTU SUPPORT**
SCALE: 1/8" = 1'-0"

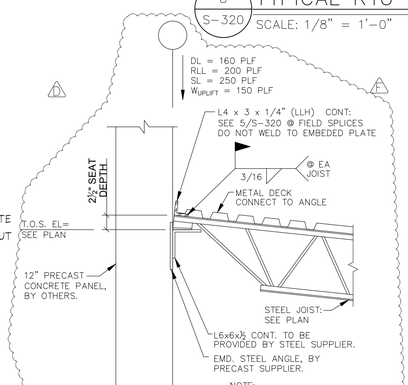

12 S-320 **JST TO BRNG WALL DETAIL AT LOWER ROOF**
SCALE: 3/4" = 1'-0"

LICENSED STRUCTURAL ENGINEER
Proj 20181732
MICHAEL E HAAS
081-005572
date 10/16/20
STATE OF ILLINOIS
exp. 11/30/20

STRUCTURAL ENGINEER
GreenbergFarrow
21 South Evergreen Avenue
Suite 200
Arlington Heights, IL 60005
t: 847 788 9200

LaSalle Associates Consulting, Inc.
605 Wildwood Ln, West Chicago, IL 60185
630-293-9022 www.lasalleassoc.com

REV.	DATE	BY	DESCRIPTION
4	10-16-2020	MH	ADDENDUM #1
3	07-21-2020	MH	OUC RE-SUBMITTAL
2	06-19-2020	MH	PERMIT RESPONSE
1	01-07-2020	MH	ISSUED FOR BID
A	12-27-19	MH	ISSUED FOR PERMIT

SCALE:	AS SHOWN
DATE:	12-27-19
DRAWN:	CB
CHECKED:	MH
APPROVED:	MH

ACEng
www.ac-engineering.com

CLIENT
GREEN ERA SUSTAINABILITY, LLC
ANAEROBIC DIGESTER PROJECT
650 W. 83RD STREET
CHICAGO, IL. 60620
PERMIT APPLICATION No = 100854184

DESCRIPTION
FRAMING DETAILS

PROJECT NO:
20181732.0

SHEET:
S-320

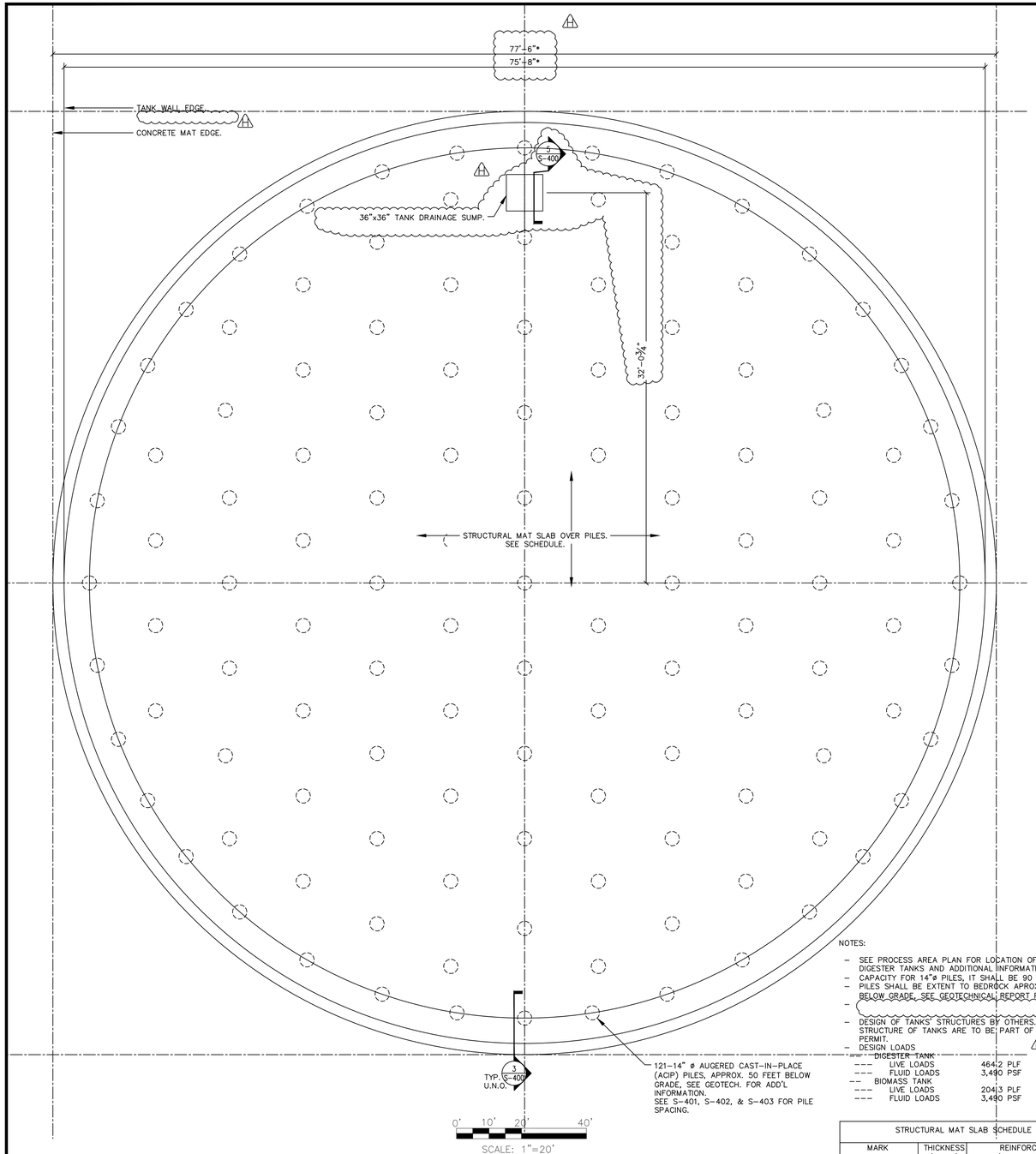

DIGESTER TANK – FOUNDATION PLAN (1 / S-400)

3/16" = 1'-0"

NOTES:

- SEE PROCESS AREA PLAN FOR LOCATION OF BIOMASS AND DIGESTER TANKS AND ADDITIONAL INFORMATION.
- CAPACITY FOR 14"ø PILES, IT SHALL BE 90 TONS.
- PILES SHALL BE EXTENT TO BEDROCK APROX. 50 FEET BELOW GRADE, SEE GEOTECHNICAL REPORT FOR ADD'L
- DESIGN OF TANKS' STRUCTURES BY OTHERS. THE STRUCTURE OF TANKS ARE TO BE PART OF A SEPARATE PERMIT.
- DESIGN LOADS
  - DIGESTER TANK
    - LIVE LOADS 464.2 PLF
    - FLUID LOADS 3,490 PSF
  - BIOMASS TANK
    - LIVE LOADS 2043 PLF
    - FLUID LOADS 3,490 PSF

STRUCTURAL MAT SLAB SCHEDULE		
MARK	THICKNESS (FT-IN)	REINFORCEMENT (TOP & BOTTOM)
DIGESTER TANK	1'-9"	#5 @ 10" O.C. E.W.
BIOMASS TANK	1'-8"	#5 @ 10" O.C. E.W.

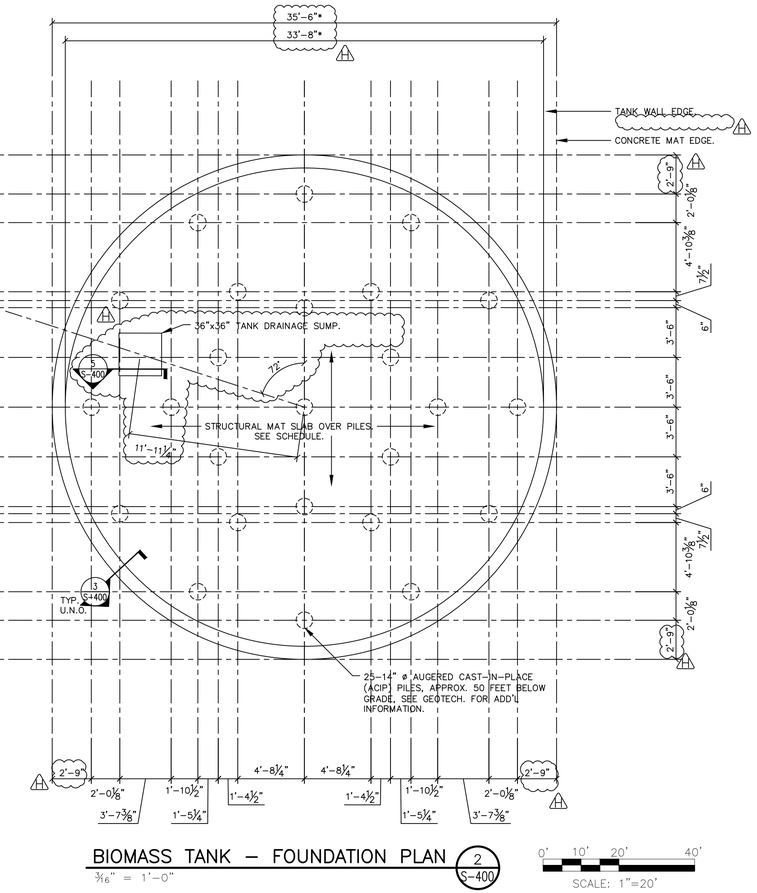

BIOMASS TANK – FOUNDATION PLAN (2 / S-400)

3/16" = 1'-0"

0' 10' 20' 40'

SCALE: 1"=20'

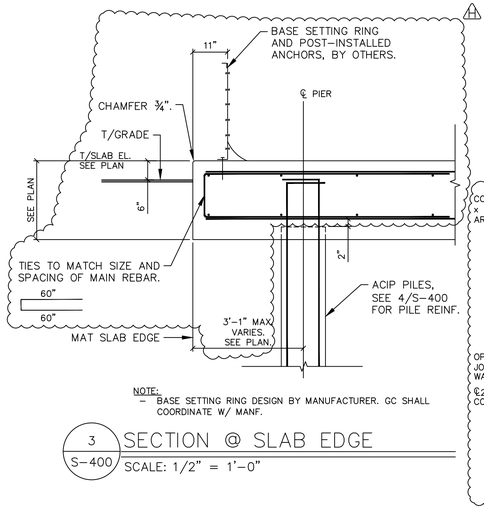

NOTE:

- BASE SETTING RING DESIGN BY MANUFACTURER. GC SHALL COORDINATE W/ MANF.

SECTION @ SLAB EDGE (3 / S-400)

SCALE: 1/2" = 1'-0"

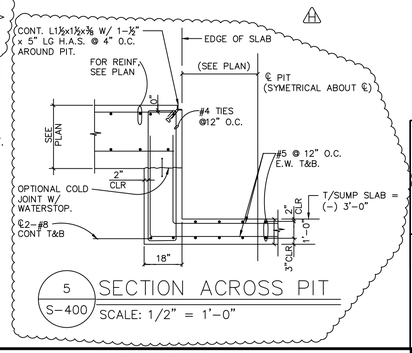

SECTION ACROSS PIT (5 / S-400)

SCALE: 1/2" = 1'-0"

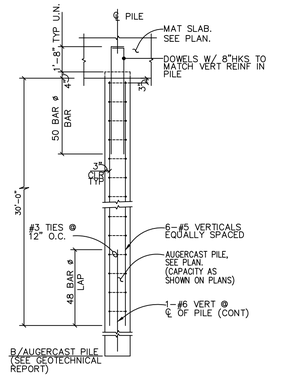

NOTE:

- THE PILE REINF SHALL MEET ALL REQUIREMENTS ON THIS DETAIL IN ADDITION TO THE REQUIREMENTS, SHOWN ON THE GEOTECHNICAL DWGS.

PILE REINFORCING (4 / S-400)

SCALE: N.T.S.

LICENSED STRUCTURAL ENGINEER
Proj 20181732
MICHAEL E HAAS
081-005572
03/15/21
STATE OF ILLINOIS
Exp. 11/30/22

STRUCTURAL ENGINEER
GreenbergFarrow
21 South Evergreen Avenue
Suite 200
Arlington Heights, IL 60005
t: 847 788 9200

LaSalle Associates Consulting, Inc.
605 Wildwood Ln, West Chicago, IL 60185
630-293-9022 www.lasalleassoc.com

REV	DATE	BY	DESCRIPTION
7	03-12-2021	MH	TANKS FOUNDATIONS UPDATES
6	10-26-2020	MH	PERMIT RESPONSE
5	10-16-2020	MH	ADDENDUM #1
4	07-21-2020	MH	OUC RE-SUBMITTAL
3	06-19-2020	MH	PERMIT RESPONSE
2	01-07-2020	MH	ISSUED FOR BID
1	12-27-19	MH	ISSUED FOR PERMIT

SCALE:	AS SHOWN
DATE:	12-27-19
DRAWN:	CB
CHECKED:	MH
APPROVED:	MH

ACEng
www.ac-engineering.com

CLIENT
GREEN ERA SUSTAINABILITY, LLC
ANAEROBIC DIGESTER PROJECT
650 W. 83RD STREET
CHICAGO, IL. 60620
PERMIT APPLICATION No = 100854184 (3)

DESCRIPTION
BIOMASS AND DIGESTER TANKS (PHASE I)
FOUNDATION PLAN

PROJECT NO:
20181732.0

SHEET:
S-400

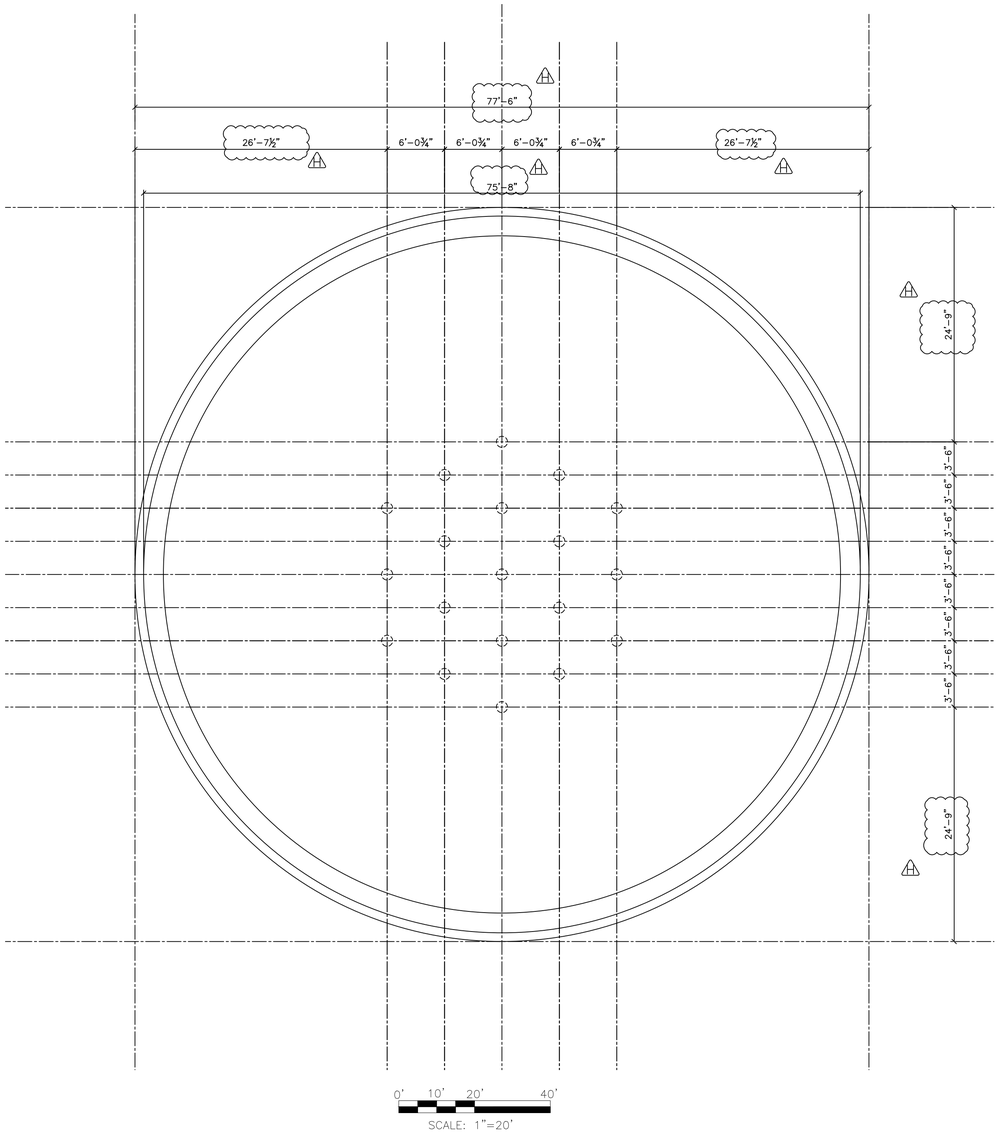

SCALE: 1"=20'

DIGESTER TANK – PILE LAYOUT PLAN 1 S-401

⅛" = 1'-0"

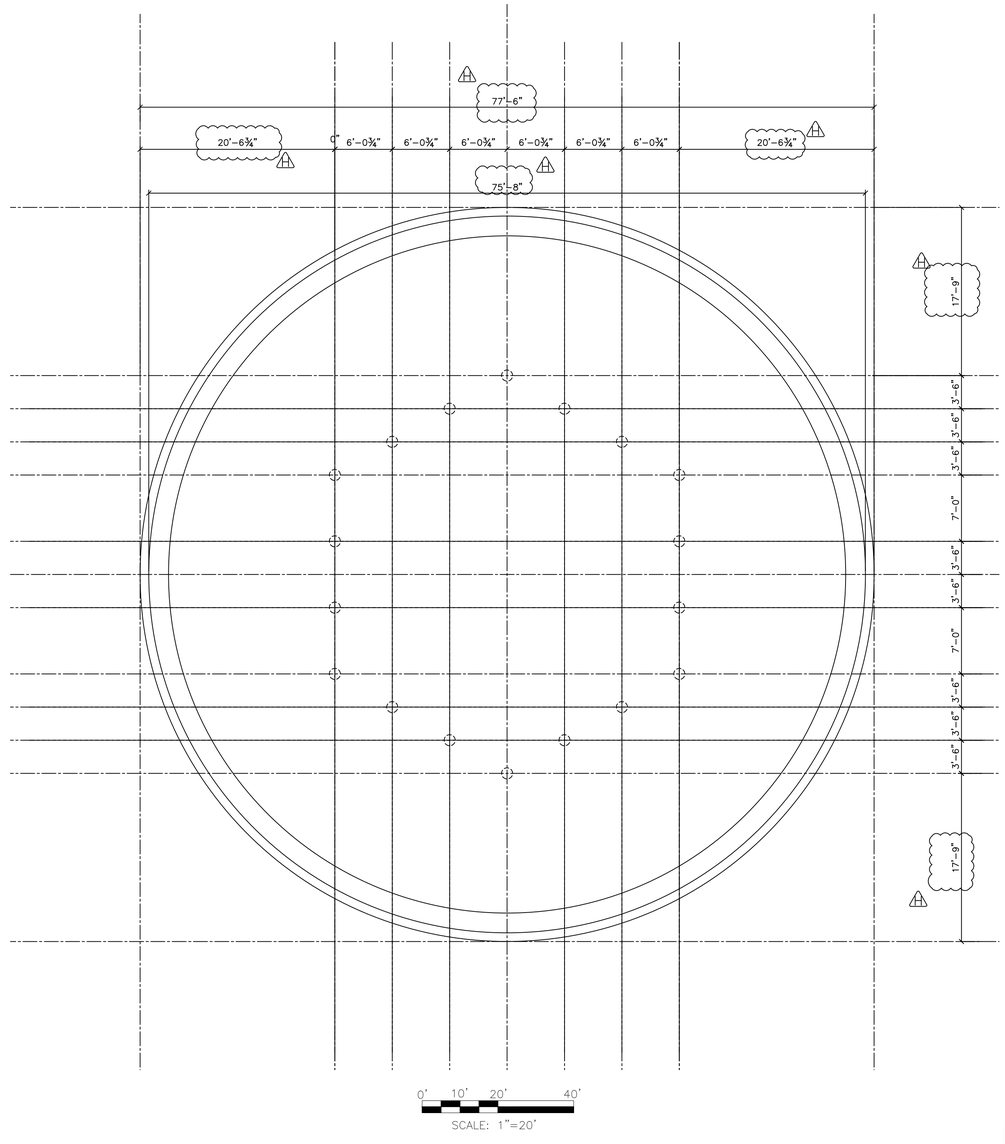

SCALE: 1"=20'

DIGESTER TANK – PILE LAYOUT PLAN 2 S-401

⅛" = 1'-0"

LICENSED STRUCTURAL ENGINEER
MICHAEL E HAAS
081-005572
03/15/21
STATE OF ILLINOIS
Proj 20181732
Exp. 11/30/22

STRUCTURAL ENGINEER
GreenbergFarrow
21 South Evergreen Avenue
Suite 200
Arlington Heights, IL 60005
t: 847 788 9200

LaSalle Associates Consulting, Inc.
605 Wildwood Ln, West Chicago, IL 60185
630-293-9022 www.lasalleassoc.com

REV	DATE	BY	DESCRIPTION
5	03-12-2021	MH	TANKS FOUNDATIONS UPDATES
4	10-26-2020	MH	PERMIT RESPONSE
3	10-16-2020	MH	ADDENDUM #1
2	07-21-2020	MH	OUC RE-SUBMITTAL
1	06-19-2020	MH	PERMIT RESPONSE
B	01-07-2020	MH	ISSUED FOR BID
A	12-27-19	MH	ISSUED FOR PERMIT

SCALE:	AS SHOWN
DATE:	12-27-19
DRAWN:	CB
CHECKED:	MH
APPROVED:	MH

ACEng
www.ac-engineering.com

CLIENT
GREEN ERA SUSTAINABILITY, LLC
ANAEROBIC DIGESTER PROJECT
650 W. 83RD STREET
CHICAGO, IL. 60620
PERMIT APPLICATION No = 100854184 5

DESCRIPTION
DIGESTER TANK
PILE LAYOUT PLAN

PROJECT NO: 20181732.0

SHEET: S-401

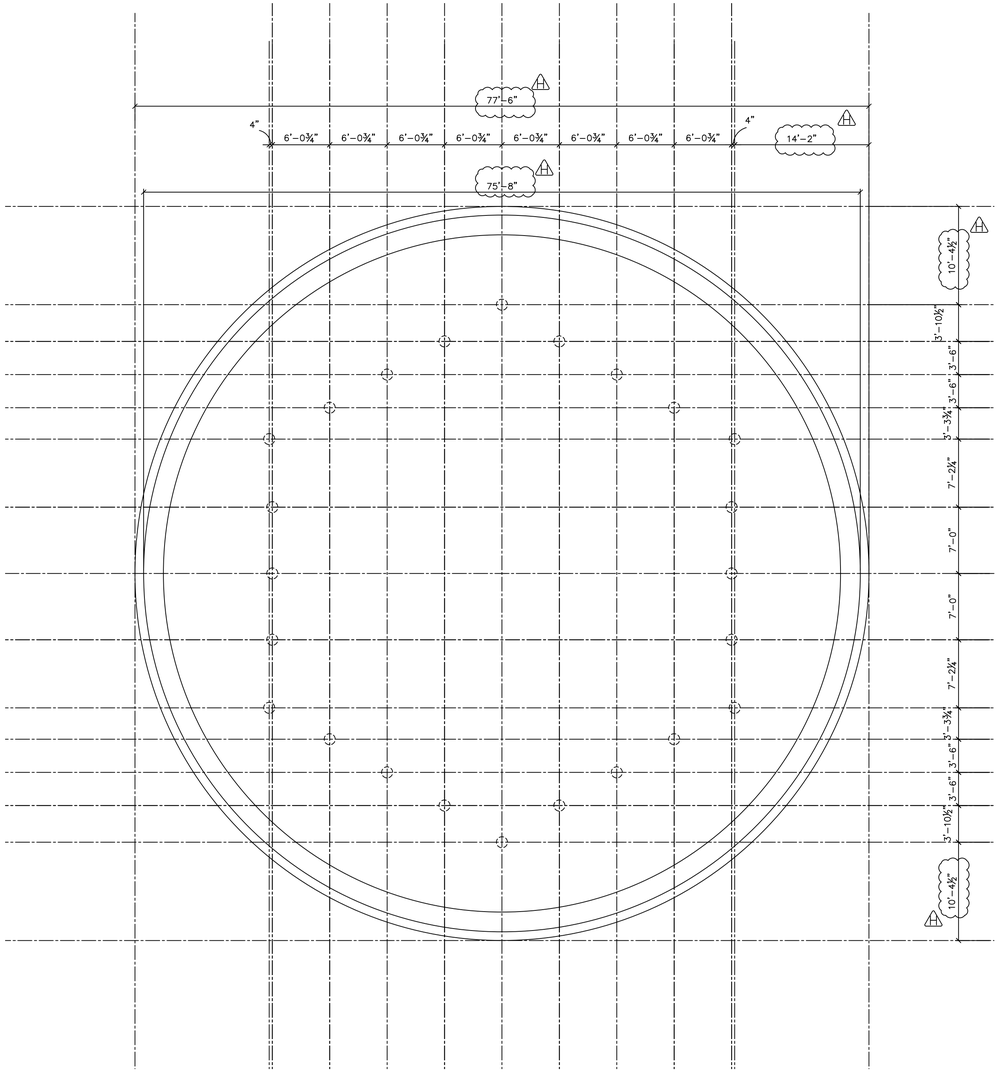

0' 10' 20' 40'

SCALE: 1"=20'

DIGESTER TANK – PILE LAYOUT PLAN (1 / S-402)

⅛" = 1'-0"

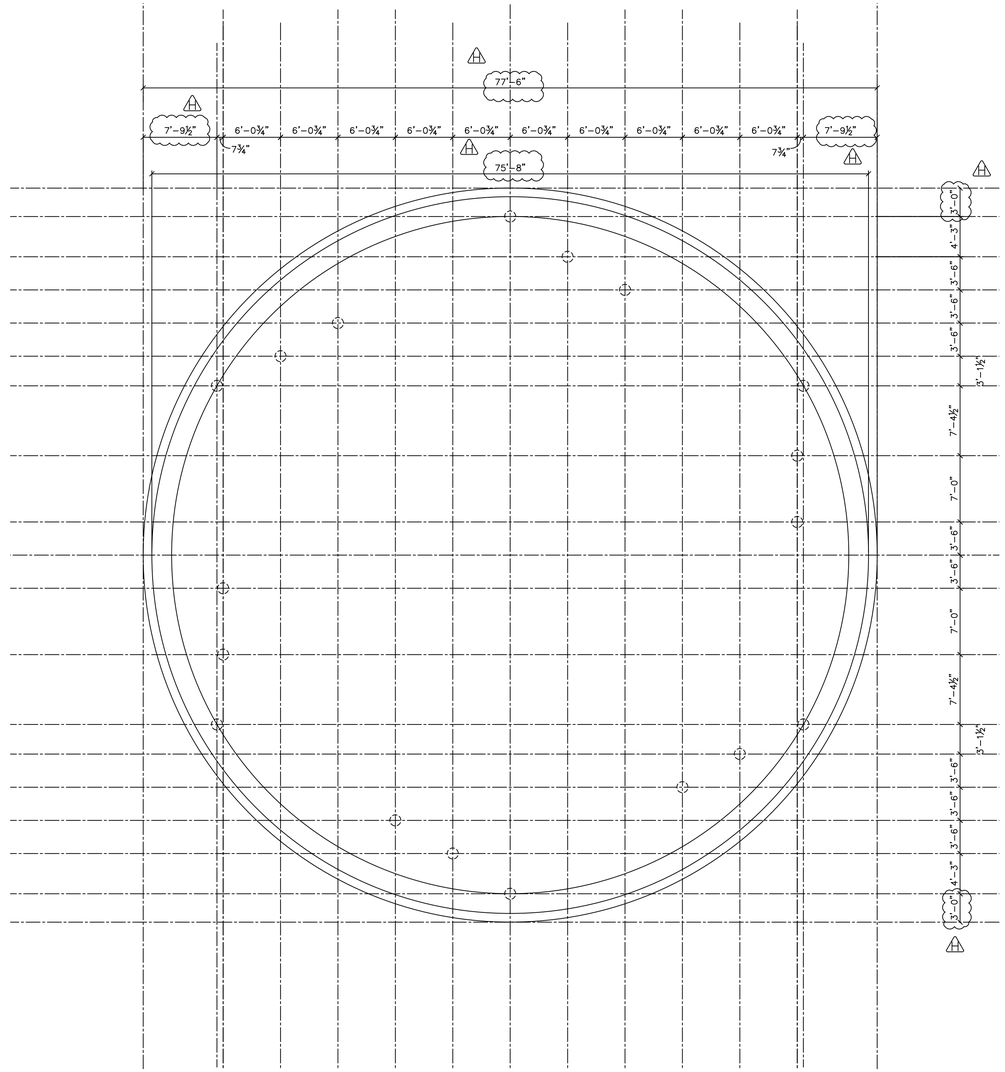

0' 10' 20' 40'

SCALE: 1"=20'

DIGESTER TANK – PILE LAYOUT PLAN (2 / S-402)

⅛" = 1'-0"

LICENSED STRUCTURAL ENGINEER
Proj 20181732
MICHAEL E HAAS
081-005572
03/15/21
STATE OF ILLINOIS

Exp. 11/30/22

REV	DATE	BY	DESCRIPTION
7	03-12-2021	MH	TANKS FOUNDATIONS UPDATES
6	10-26-2020	MH	PERMIT RESPONSE
5	10-16-2020	MH	ADDENDUM #1
4	07-21-2020	MH	OUC RE-SUBMITTAL
3	06-19-2020	MH	PERMIT RESPONSE
2	01-07-2020	MH	ISSUED FOR BID
1	12-27-19	MH	ISSUED FOR PERMIT

SCALE:	AS SHOWN
DATE:	12-27-19
DRAWN:	CB
CHECKED:	MH
APPROVED:	MH

ACEng
www.ac-engineering.com

CLIENT
GREEN ERA SUSTAINABILITY, LLC
ANAEROBIC DIGESTER PROJECT
650 W. 83RD STREET
CHICAGO, IL. 60620
PERMIT APPLICATION No = 100854184 (7)

DESCRIPTION
DIGESTER TANK
PILE LAYOUT PLAN

STRUCTURAL ENGINEER
GreenbergFarrow
21 South Evergreen Avenue
Suite 200
Arlington Heights, IL 60005
t: 847 788 9200

LaSalle Associates Consulting, Inc.
605 Wildwood Ln, West Chicago, IL 60185
630-293-9022 www.lasalleassoc.com

PROJECT NO:
20181732.0

SHEET:
S-402

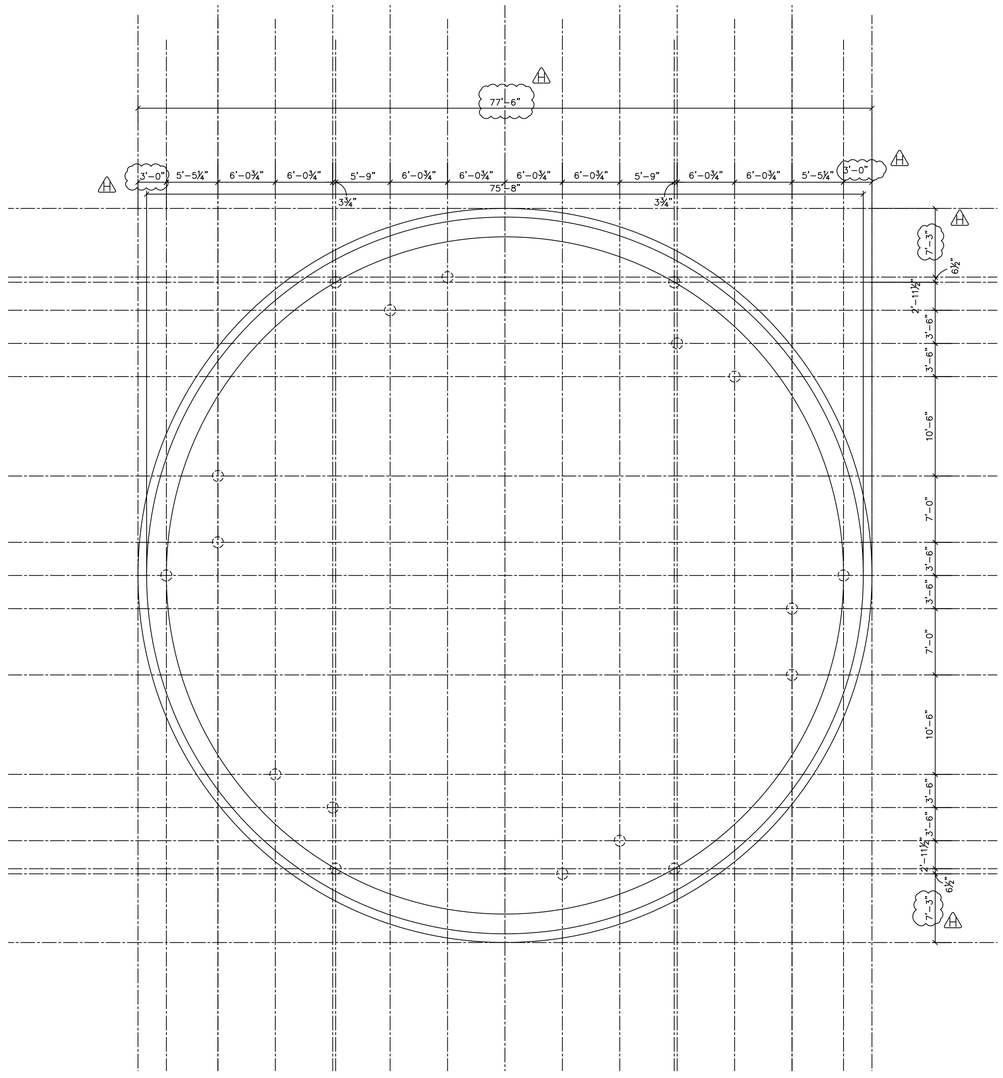

0' 10' 20' 40'

SCALE: 1"=20'

DIGESTER TANK – PILE LAYOUT PLAN 1 S-403

⅛" = 1'-0"

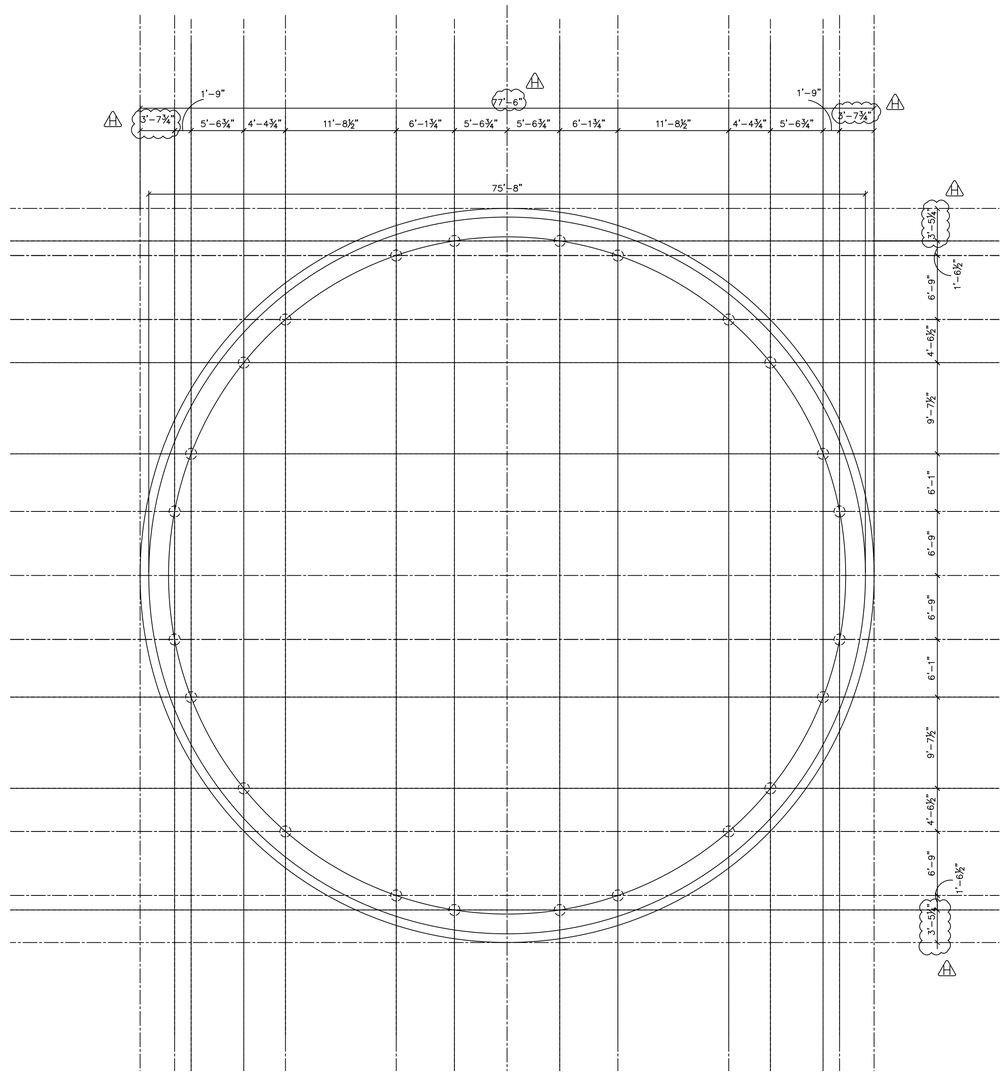

0' 10' 20' 40'

SCALE: 1"=20'

DIGESTER TANK – PILE LAYOUT PLAN 2 S-403

⅛" = 1'-0"

LICENSED STRUCTURAL ENGINEER
Proj 20181732
MICHAEL E HAAS
081-005572
03/15/21
STATE OF ILLINOIS

Exp. 11/30/22

STRUCTURAL ENGINEER

GreenbergFarrow

21 South Evergreen Avenue
Suite 200
Arlington Heights, IL 60005
t: 847 788 9200

LaSalle Associates Consulting, Inc.

605 Wildwood Ln, West Chicago, IL 60185
630-293-9022 www.lasalleassoc.com

REV	DATE	BY	DESCRIPTION
7	03-12-2021	MH	TANKS FOUNDATIONS UPDATES
6	10-26-2020	MH	PERMIT RESPONSE
5	10-16-2020	MH	ADDENDUM #1
4	07-21-2020	MH	OUC RE-SUBMITTAL
3	06-19-2020	MH	PERMIT RESPONSE
2	01-07-2020	MH	ISSUED FOR BID
1	12-27-19	MH	ISSUED FOR PERMIT

SCALE:	AS SHOWN
DATE:	12-27-19
DRAWN:	CB
CHECKED:	MH
APPROVED:	MH

ACEng
www.ac-engineering.com

CLIENT

GREEN ERA SUSTAINABILITY, LLC
ANAEROBIC DIGESTER PROJECT
650 W. 83RD STREET
CHICAGO, IL. 60620
PERMIT APPLICATION No = 100854184 7

DESCRIPTION

DIGESTER TANK
PILE LAYOUT PLAN

PROJECT NO:
20181732.0

SHEET:
S-403

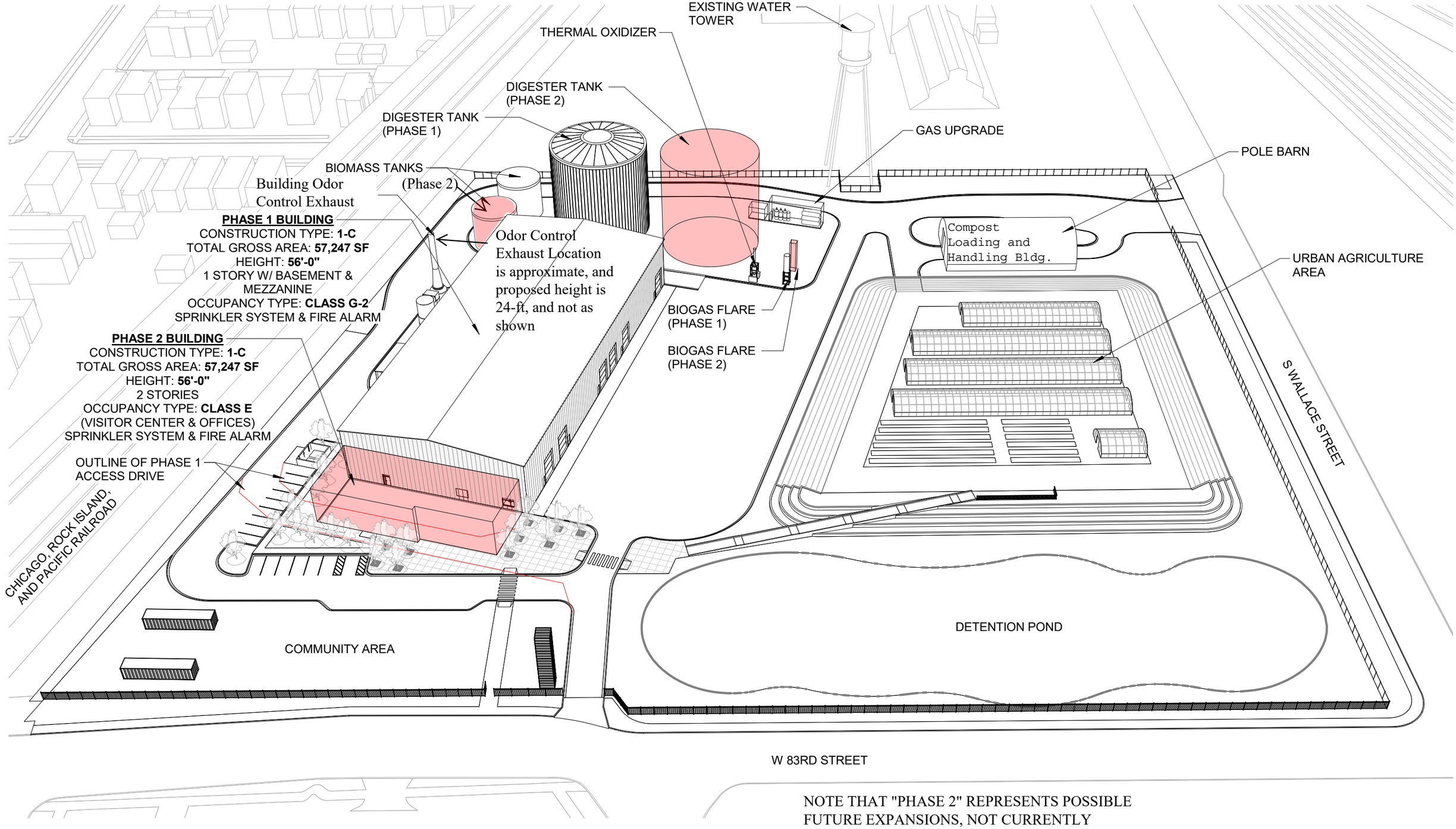

NOTE THAT "PHASE 2" REPRESENTS POSSIBLE FUTURE EXPANSIONS, NOT CURRENTLY PROPOSED UNDER PERMIT APPLICATIONS TO IEPA OR CHICAGO CDPH

GREEN ERA EDUCATIONAL NFP
GREEN ERA SUSTAINABILITY, LLC
650 WEST 83RD STREET CHICAGO, IL 60620

AERIAL - 650 W 83RD STREET

McBride Kelley Baurer, Inc.
JANUARY 7, 2019

GREEN ERA PROCESS DRAWINGS		
DRAWING	**DESCRIPTION**	**REVISION**
G-001	PROCESS EQUIPMENT TITLE PAGE & INDEX	-
G-100	BUILDING AREA KEY	1
DQ-200	DIGESTER BUILDING & TANK YARD EQUIPMENT ELEVATIONS	1
DQ-201	DIGESTER BUILDING & TANK YARD EQUIPMENT ELEVATIONS	1
DQ-400	DIGESTER BUILDING & TANK YARD PROCESS EQUIPMENT	1
DQ-401	TANK YARD PROCESS EQUIPMENT	1
DQ-410	DIGESTER BUILDING LOWER LEVEL & TANK YARD PROCESS EQUIPMENT	1
DQ-500	DIGESTER BUILDING FINISH FLOOR PROCESS EQUIPMENT	1
DQ-510	DIGESTER BUILDING LOWER LEVEL PROCESS EQUIPMENT	1
DQ-301	DIGESTER BUILDING PROCESS EQUIPMENT SECTIONS	1
DQ-302	DIGESTER BUILDING PROCESS EQUIPMENT SECTIONS	1
DQ-303	DIGESTER BUILDING PROCESS EQUIPMENT SECTIONS	1
DQ-304	DIGESTER BUILDING PROCESS EQUIPMENT SECTIONS	1
DQ-305	DIGESTER BUILDING PROCESS EQUIPMENT SECTIONS	1
DQ-306	DIGESTER BUILDING PROCESS EQUIPMENT SECTIONS	1
DE-001	DIGESTER BUILDING & TANK YARD PROCESS ELECTRICAL	-
DE-400	DIGESTER BUILDING & TANK YARD PROCESS ELECTRICAL	1
DE-401	TANK YARD PROCESS ELECTRICAL	1
DE-402	DIGESTER BUILDING YARD DETAILS PROCESS ELECTRICAL	1
DE-403	DIGESTER BUILDING YARD DETAILS PROCESS ELECTRICAL	1
DE-501	DIGESTER BUILDING PROCESS ELECTRICAL	1
DE-502	DIGESTER BUILDING PROCESS ELECTRICAL	1
DE-510	DIGESTER BUILDING LOWER LEVEL PROCESS ELECTRICAL	1
DE-300	TANK YARD PROCESS ELECTRICAL SECTIONS	-
DP-001	DIGESTER BUILDING & TANK YARD PROCESS PIPING	-
DP-100	GREEN ERA PLANT YARD PIPING	1
DP-400	TANK YARD PROCESS PIPING	1
DP-401	DIGESTER BUILDING YARD DETAILS PROCESS PIPING	1
DP-410	DIGESTER BUILDING LOWER LEVEL & TANK YARD PROCESS PIPING	1
DP-500	DIGESTER BUILDING PROCESS PIPING	1
DP-501	DIGESTER BUILDING PROCESS PIPING	1
DP-502	DIGESTER BUILDING PROCESS PIPING	1
DP-503	TANK YARD PROCESS PIPING DETAILS	1
DP-504	TANK YARD PROCESS PIPING DETAILS	1
DP-510	DIGESTER BUILDING LOWER LEVEL PROCESS PIPING	1
DP-300	TANK YARD PROCESS PIPING SECTIONS	-
DP-301	DIGESTER BUILDING PROCESS PIPING SECTIONS	1
DP-302	DIGESTER BUILDING PROCESS PIPING SECTIONS	1
DP-303	DIGESTER BUILDING PROCESS PIPING SECTIONS	1
DP-304	DIGESTER BUILDING PROCESS PIPING SECTIONS	1
DP-305	DIGESTER BUILDING PROCESS PIPING SECTIONS	1
DP-306	DIGESTER BUILDING PROCESS PIPING SECTIONS	1

1. Pumpable waste receiving from tanker trucks. Pumpable organic wastes are discharged from tankers through a hose to below slab holding tanks. Trucks will pull through the building's north bay and empty in the building.
2. Non-pumpable food waste receiving from dump trucks. Non-pumpable organic wastes are tipped from trucks directly into a 90 cubic yard receiving bin. Pallets of packaged waste can also be transferred into this bunker with a forklift.
3. Organic separation from packaging and pulping. Food waste is conveyed from the receiving bin to a separation mill. Pumpable organics will be combined with the food waste in the mill to make a homogeneous pulp. Packaging will be automatically separated from the organics and discharged to a belt conveyor. Packaging will consist of film plastics (bags, shrink wrap), rigid plastics (milk jugs, water bottles, yogurt containers), and metals (tin cans, aluminum cans).
4. Grit will be settled from the pulp and separated for disposal.
5. Feedstock blending. The pulp is pumped to the above-ground biomass holding tank (more than 300,000 gallon capacity).
6. Digester feeding. The feedstock is automatically pumped to the digester on a set schedule. The bacteria in the digester perform better when fed regularly (12 to 24 times per day). The pulp is continually mixed in the 1.5 million gallon digester and is held about 30 days. The tank temperature is maintained at 125F to kill pathogens like salmonella.
7. Final screening. Digestate is pumped back into the building through a 3/16" screen to separate any remaining contamination.
8. Solids separation/dewatering. Screened digestate is processed to separate the remaining fiber from the water. The water is discharged to the sewer. The solids are squeezed dry on a belt press and conveyed to a waiting truck.
9. Digested solids are loaded onto a truck inside the building. Urban Growers Collective will utilize the nutrient rich solids with their other composts to improve the soil at their community farming sites in Chicago.
10. Separated packaging from the received waste is compacted for recycling or disposal.
11. RNG production. Biomethane produced during digestion is separated from carbon dioxide and water vapor to produce Renewable Natural Gas that is compressed and injected back to the utility pipeline operated by Peoples Gas.
12. Odor Control. Air in the building is treated with ionized oxygen to neutralize odors for the employees. All ventilation air is exhausted to an outdoor ionization reactor for further odor reduction and finally exhausted through a bed of activated carbon.

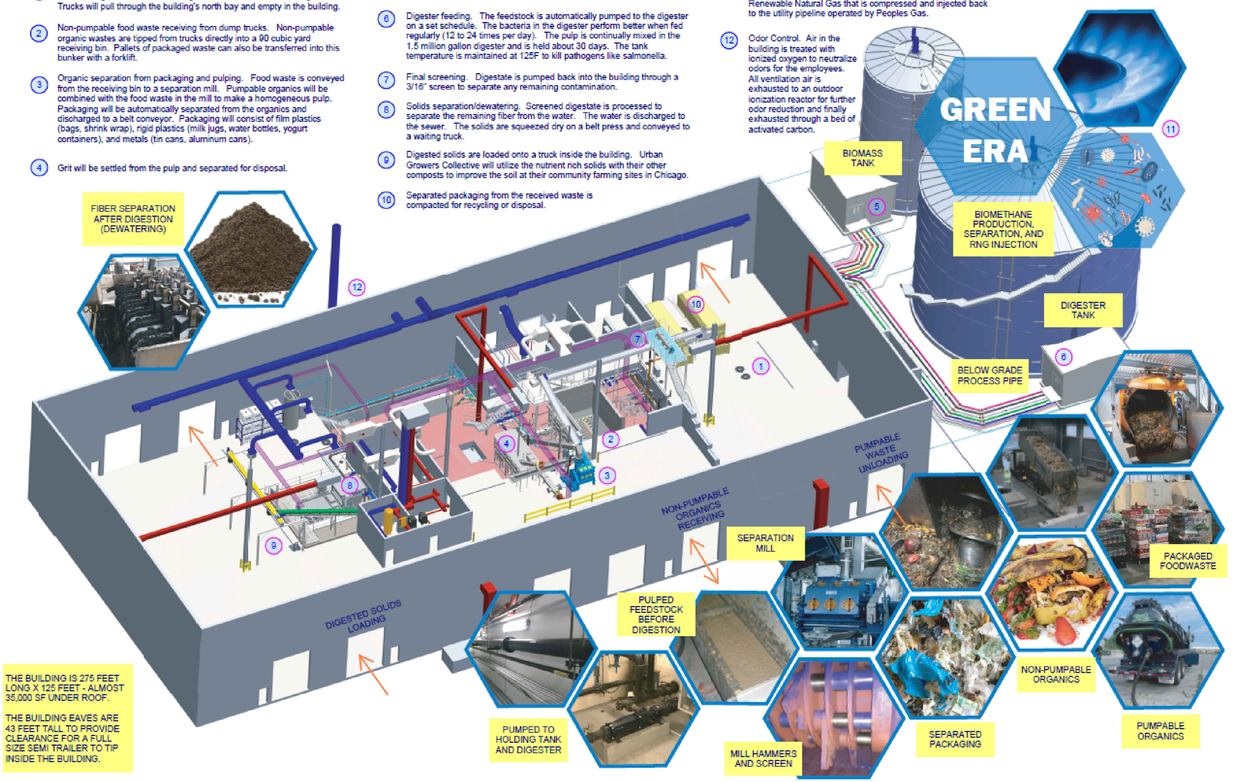

THE BUILDING IS 275 FEET LONG X 125 FEET - ALMOST 35,000 SF UNDER ROOF.

THE BUILDING EAVES ARE 43 FEET TALL TO PROVIDE CLEARANCE FOR A FULL SIZE SEMI TRAILER TO TIP INSIDE THE BUILDING.

NO.	DATE
BY	
REVISION	

NO.	DATE
BY	
REVISION	

NO.	DATE
BY	
REVISION	

ACEng
ADAMS & CHRISTENSEN ENGINEERING, INC.
782 WEXFORD CT.
GRAYSLAKE, ILLINOIS 60030
CERTIFICATE OF AUTHORIZATION NO. 05379

GREEN ARROW
2759 LONG ROAD
WOOSTER, OH 44691

THIS DRAWING CONTAINS VALUABLE CONFIDENTIAL AND PROPRIETARY INFORMATION THAT BELONGS TO GREEN ARROW ("GA") AND IS SUBJECT TO A CONFIDENTIALITY AND NONDISCLOSURE AGREEMENT. GA IS THE AUTHOR AND OWNER OF THIS DRAWING AND RETAINS ALL COPYRIGHTS AND OTHER INTELLECTUAL PROPERTY RIGHTS AND PRIVILEGES WITH RESPECT HERETO, INCLUDING COPYRIGHTS. THE INFORMATION CONTAINED HEREIN MAY NOT AT ANY TIME BE USED FOR ANY UNAUTHORIZED PURPOSE, NOR REPRODUCED BY OR PROVIDED TO ANY THIRD PARTY, WITHOUT THE PRIOR WRITTEN CONSENT OF GA.

©2020, GREEN ARROW.
ALL RIGHTS RESERVED.

GREEN ERA
PROCESS DRAWINGS
TITLE PAGE & INDEX

GREEN ERA
650 W. 83RD ST.
CHICAGO, IL 60620

AREA	CHECKED BY
	NM
JOB NO.	DRAWN BY
1512	BR
SCALE	DATE
	08/24/2021
DWG NO.	
SHEET NO.	
G-001	

Green Arrow/02 Projects/1512 Chicago - Feldman - Green Era/07 Drawings/04 Construction/Green Era Equipment Layout.dwg

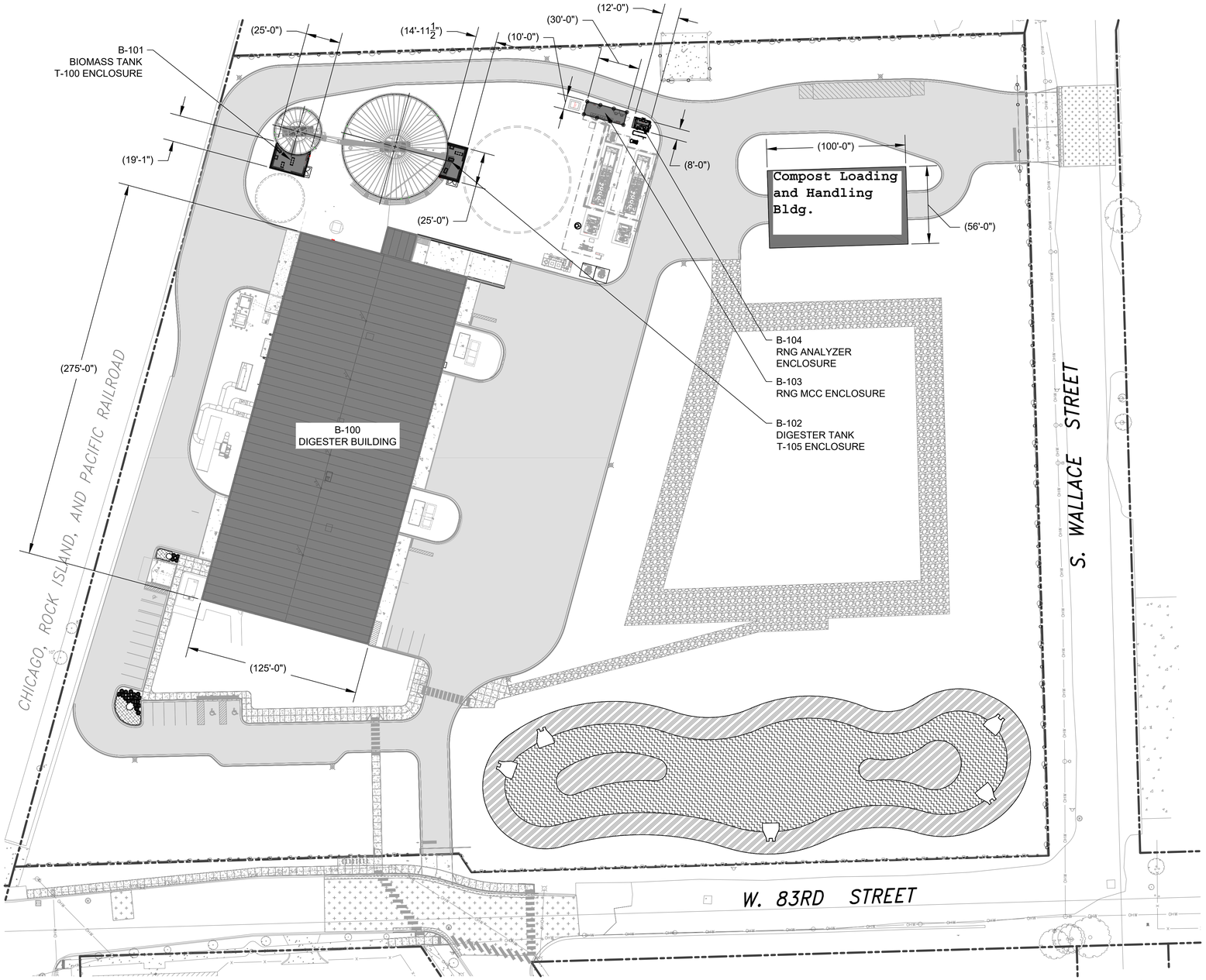

BUILDING NUMBER	BUILDING DESCRIPTION	BUILDING AREA (SF)
B-100	DIGESTER BUILDING	46,945
B-101	TANK T-100 ENCLOSURE	381
B-102	TANK T-105 ENCLOSURE	339
B-103	RNG CONTROL ENCLOSURE	300
B-104	RNG ANALYZER ENCLOSURE	96
B-200	COMPOST POLE BARN (N.I.C)	5,400

BUILDING AREA KEY

SCALE: 1" = 40'-0"

0 40' 80'

NO.	DATE
BY	
REVISION	

NO.	DATE
BY	
REVISION	

NO.	DATE
1	08/24/2021
BY	BR
REVISION	RE-ISSUE WITH EQUIPMENT SUBMITTALS TO DATE

ACEng

ADAMS & CHRISTENSEN ENGINEERING, INC.
782 WEXFORD CT.
GRAYSLAKE, ILLINOIS 60030
CERTIFICATE OF AUTHORIZATION NO. 05379

GREEN ARROW

2759 LONG ROAD
WOOSTER, OH 44691

THIS DRAWING CONTAINS VALUABLE CONFIDENTIAL AND PROPRIETARY INFORMATION THAT BELONGS TO GREEN ARROW ("GA"), AND IS SUBJECT TO A CONFIDENTIALITY AND NONDISCLOSURE AGREEMENT. GA IS THE AUTHOR AND OWNER OF THIS DRAWING, AND RETAINS ALL COMMON LAW, STATUTORY AND OTHER RIGHTS AND PRIVILEGES WITH RESPECT HERETO, INCLUDING COPYRIGHTS. THE INFORMATION CONTAINED HEREIN MAY NOT AT ANY TIME BE USED FOR ANY UNAUTHORIZED PURPOSE, NOR REPRODUCED BY OR PROVIDED TO ANY THIRD PARTY, WITHOUT THE PRIOR WRITTEN CONSENT OF GA.

©2020, GREEN ARROW.
ALL RIGHTS RESERVED.

PROPOSED
BUILDING AREA KEY

GREEN ERA
650 W. 83RD ST.
CHICAGO, IL 60620

AREA	CHECKED BY
	NM
JOB NO. 1512	DRAWN BY BR
SCALE SEE NOTE	DATE 11/10/2020
DWG NO.	
SHEET NO. G-100	

Green Arrow\02 Projects\1512 Chicago - Feldman - Green Era\07 Drawings\04 Construction\Green Era Equipment Layout.dwg

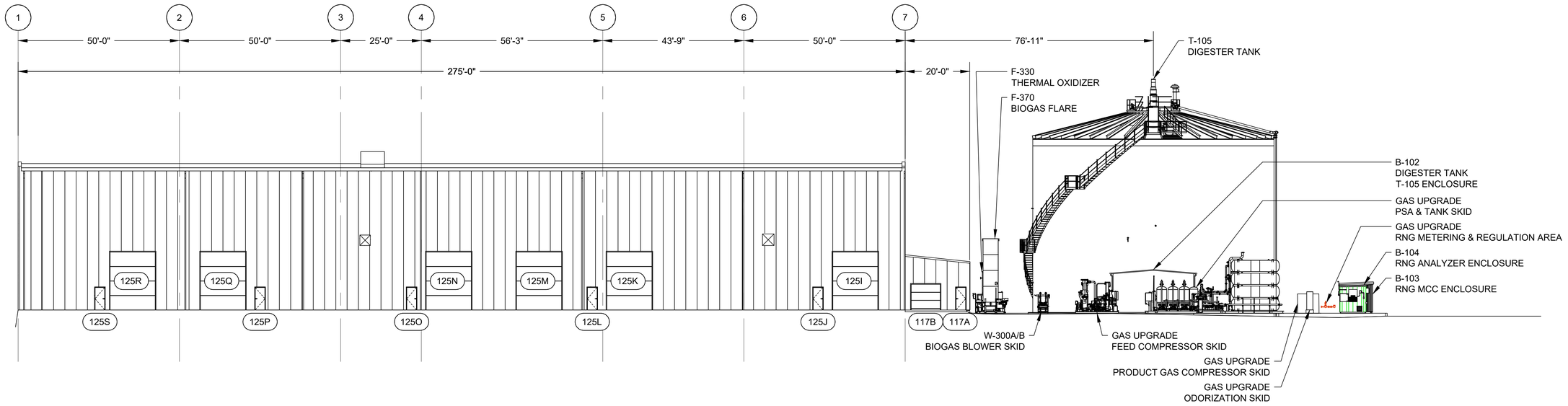

BUILDING & TANK YARD
EAST ELEVATION

SCALE: 1/16" = 1'-0"

1/16" = 1'-0"

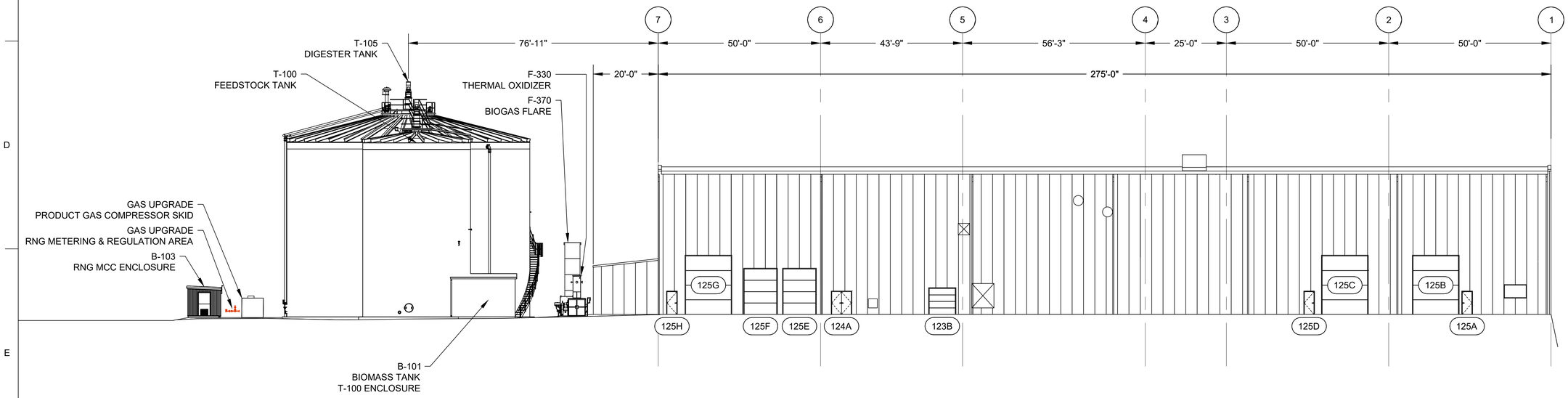

BUILDING & TANK YARD
WEST ELEVATION

SCALE: 1/16" = 1'-0"

1/16" = 1'-0"

ISSUED FOR CONSTRUCTION
REV. DATE
AUG 31, 2021

NO.	DATE
BY	
REVISION	

NO.	DATE
BY	
REVISION	

NO.	DATE
1	08/24/2021

BY BR

REVISION
RE-ISSUE WITH EQUIPMENT SUBMITTALS TO DATE

ACEng

ADAMS & CHRISTENSEN ENGINEERING, INC.
782 WEXFORD CT.
GRAYSLAKE, ILLINOIS 60030
CERTIFICATE OF AUTHORIZATION NO. 05379

GREEN ARROW

2759 LONG ROAD
WOOSTER, OH 44691

THIS DRAWING CONTAINS VALUABLE CONFIDENTIAL AND PROPRIETARY INFORMATION THAT BELONGS TO GREEN ARROW ("GA") AND IS SUBJECT TO A CONFIDENTIALITY AND NONDISCLOSURE AGREEMENT. GA IS THE AUTHOR AND OWNER OF THIS DRAWING, AND RETAINS ALL COMMON LAW, STATUTORY AND OTHER RIGHTS AND PRIVILEGES WITH RESPECT HERETO, INCLUDING COPYRIGHTS. THE INFORMATION CONTAINED HEREIN MAY NOT AT ANY TIME BE USED FOR ANY UNAUTHORIZED PURPOSE, NOR REPRODUCED BY OR PROVIDED TO ANY THIRD PARTY, WITHOUT THE PRIOR WRITTEN CONSENT OF GA.

©2020, GREEN ARROW.
ALL RIGHTS RESERVED.

DIGESTER BUILDING & TANK YARD
EQUIPMENT ELEVATIONS

GREEN ERA
650 W. 83RD ST.
CHICAGO, IL 60620

AREA	CHECKED BY
	NM
JOB NO. 1512	DRAWN BY BR
SCALE SEE NOTE	DATE 03/10/2021
DWG NO.	
SHEET NO. DQ-200	

Green Arrow\02 Projects\1512 Chicago - Feldman - Green Era\07 Drawings\04 Construction\Green Era Equipment Layout Sections.dwg

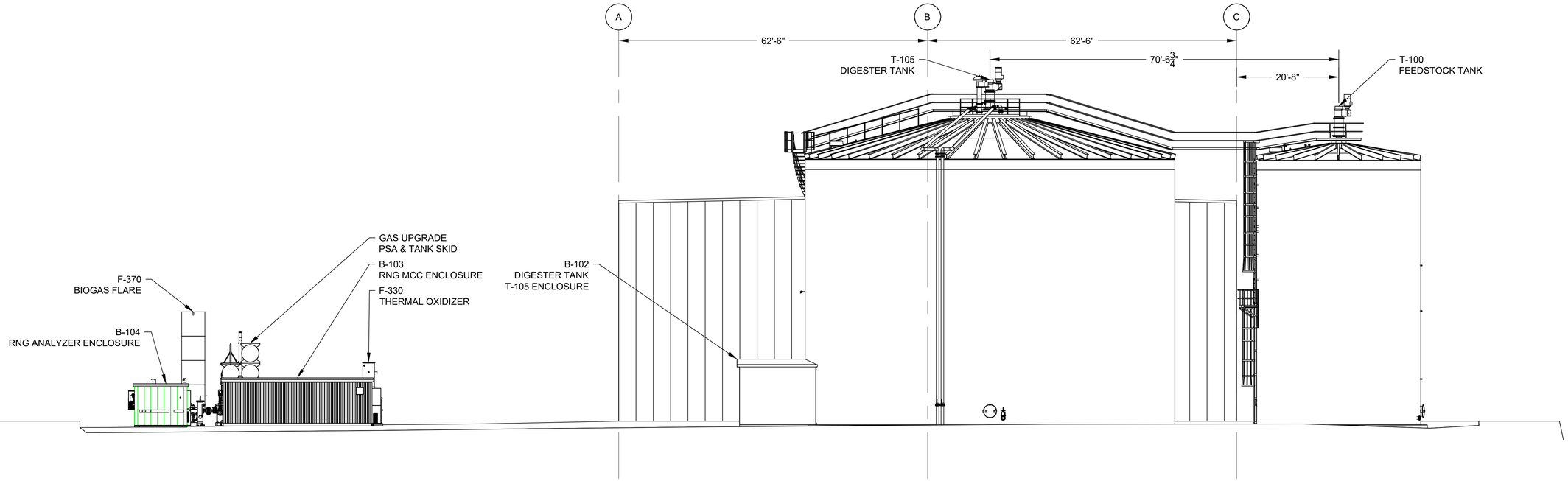

BUILDING & TANK YARD
NORTH ELEVATION

SCALE: 3/32" = 1'-0"

3/32" = 1'-0"

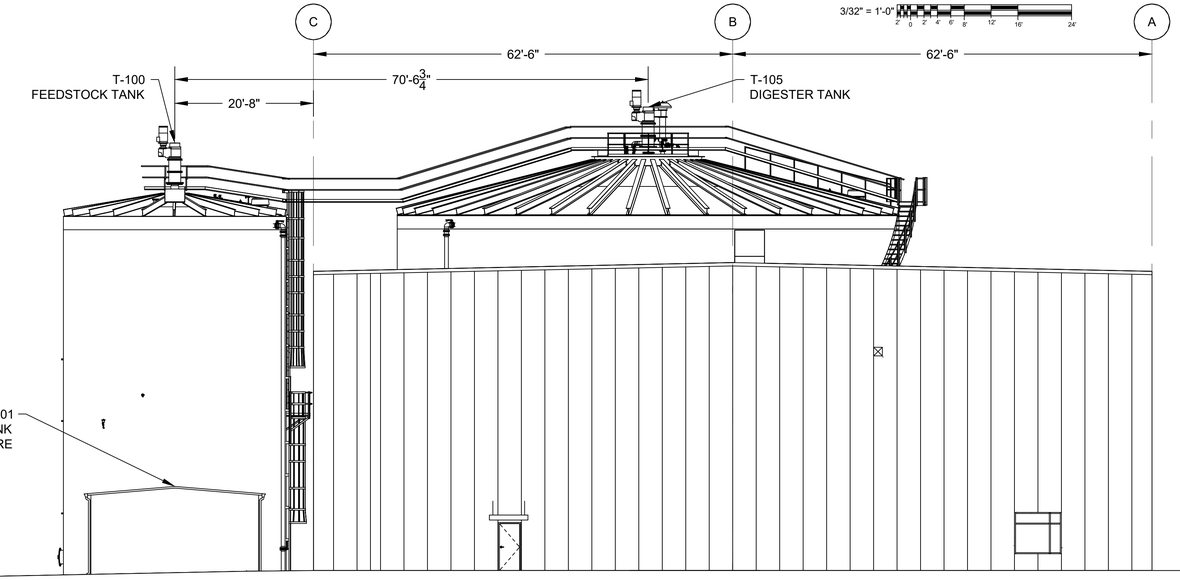

BUILDING & TANK YARD
SOUTH ELEVATION

SCALE: 3/32" = 1'-0"

3/32" = 1'-0"

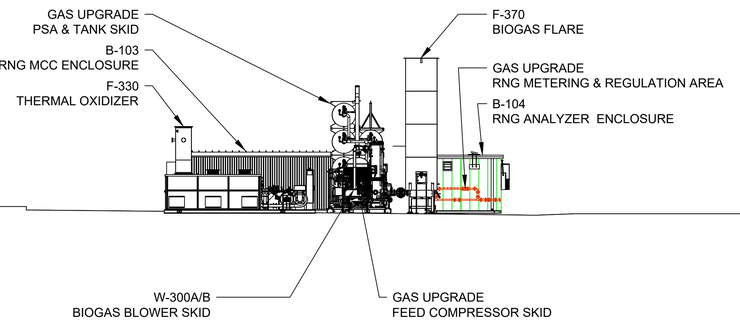

ISSUED FOR CONSTRUCTION
REV. DATE
AUG 31, 2021

NO.	DATE
BY	
REVISION	

NO.	DATE
BY	
REVISION	

NO.	DATE
1	08/24/2021
BY	BR
REVISION	RE-ISSUE WITH EQUIPMENT SUBMITTALS TO DATE

ACEng
ADAMS & CHRISTENSEN ENGINEERING, INC.
782 WEXFORD CT.
GRAYSLAKE, ILLINOIS 60030
CERTIFICATE OF AUTHORIZATION NO. 05379

GREEN ARROW
2759 LONG ROAD
WOOSTER, OH 44691

THIS DRAWING CONTAINS VALUABLE CONFIDENTIAL AND PROPRIETARY INFORMATION THAT BELONGS TO GREEN ARROW ("GA"), AND IS SUBJECT TO A CONFIDENTIALITY AND NONDISCLOSURE AGREEMENT BETWEEN GA AND THE RECIPIENT OF THIS DRAWING, AND RETAINS ALL COMMON LAW, STATUTORY AND OTHER RIGHTS AND PRIVILEGES WITH RESPECT HERETO, INCLUDING COPYRIGHTS. THE INFORMATION CONTAINED HEREIN MAY NOT AT ANY TIME BE USED FOR ANY PURPOSE OTHER THAN AS AUTHORIZED BY GA OR PROVIDED TO ANY THIRD PARTS, WITHOUT THE PRIOR WRITTEN CONSENT OF GA.

©2020, GREEN ARROW.
ALL RIGHTS RESERVED.

DIGESTER BUILDING
& TANK YARD
EQUIPMENT ELEVATIONS

GREEN ERA
650 W. 83RD ST.
CHICAGO, IL 60620

AREA	CHECKED BY
	NM
JOB NO.	DRAWN BY
1512	BR
SCALE	DATE
SEE NOTE	03/10/2021
DWG NO.	
SHEET NO.	DQ-201

Green Arrow\06 Projects\1512 Chicago - Feldman - Green Era\07 Drawings\04 Construction\Green Era Equipment Layout Sections.dwg

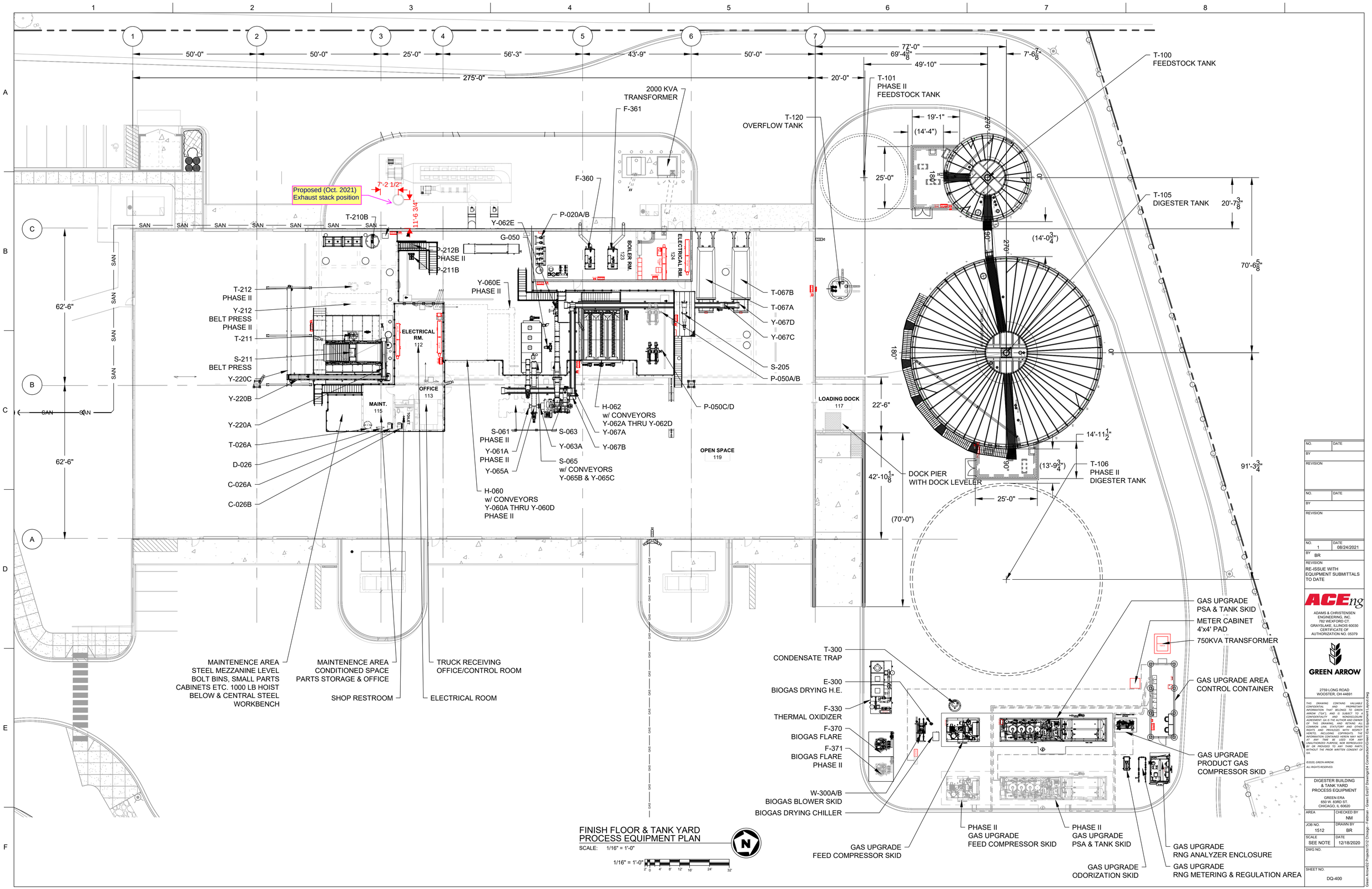

FINISH FLOOR & TANK YARD
PROCESS EQUIPMENT PLAN

SCALE: 1/16" = 1'-0"

1/16" = 1'-0"

NO.	DATE
BY	
REVISION	

NO.	DATE
BY	
REVISION	

NO.	DATE
1	08/24/2021
BY	BR
REVISION	RE-ISSUE WITH EQUIPMENT SUBMITTALS TO DATE

ACEng

ADAMS & CHRISTENSEN ENGINEERING, INC.
782 WEXFORD CT.
GRAYSLAKE, ILLINOIS 60030
CERTIFICATE OF AUTHORIZATION NO. 05379

GREEN ARROW

2759 LONG ROAD
WOOSTER, OH 44691

THIS DRAWING CONTAINS VALUABLE CONFIDENTIAL AND PROPRIETARY INFORMATION THAT BELONGS TO GREEN ARROW ("GA"), AND IS SUBJECT TO A CONFIDENTIALITY AND NONDISCLOSURE AGREEMENT. GA IS THE AUTHOR AND OWNER OF THIS DRAWING, AND RETAINS ALL COMMON LAW, STATUTORY AND OTHER RIGHTS AND PROVIDES WITH RESPECT HERETO, INCLUDING COPYRIGHTS. THE INFORMATION CONTAINED HEREIN MAY NOT AT ANY TIME BE USED FOR ANY UNAUTHORIZED PURPOSE, NOR REPRODUCED BY OR PROVIDED TO ANY THIRD PARTY, WITHOUT THE PRIOR WRITTEN CONSENT OF GA.

©2020, GREEN ARROW.
ALL RIGHTS RESERVED.

DIGESTER BUILDING
& TANK YARD
PROCESS EQUIPMENT

GREEN ERA
650 W. 83RD ST.
CHICAGO, IL 60620

AREA	CHECKED BY
	NM
JOB NO. 1512	DRAWN BY BR
SCALE SEE NOTE	DATE 12/18/2020
DWG NO.	
SHEET NO. DQ-400	

Green Arrow\02 Projects\1512 Chicago - Feldman - Green Era\07 Drawings\04 Construction\Green Era Equipment Layout.dwg

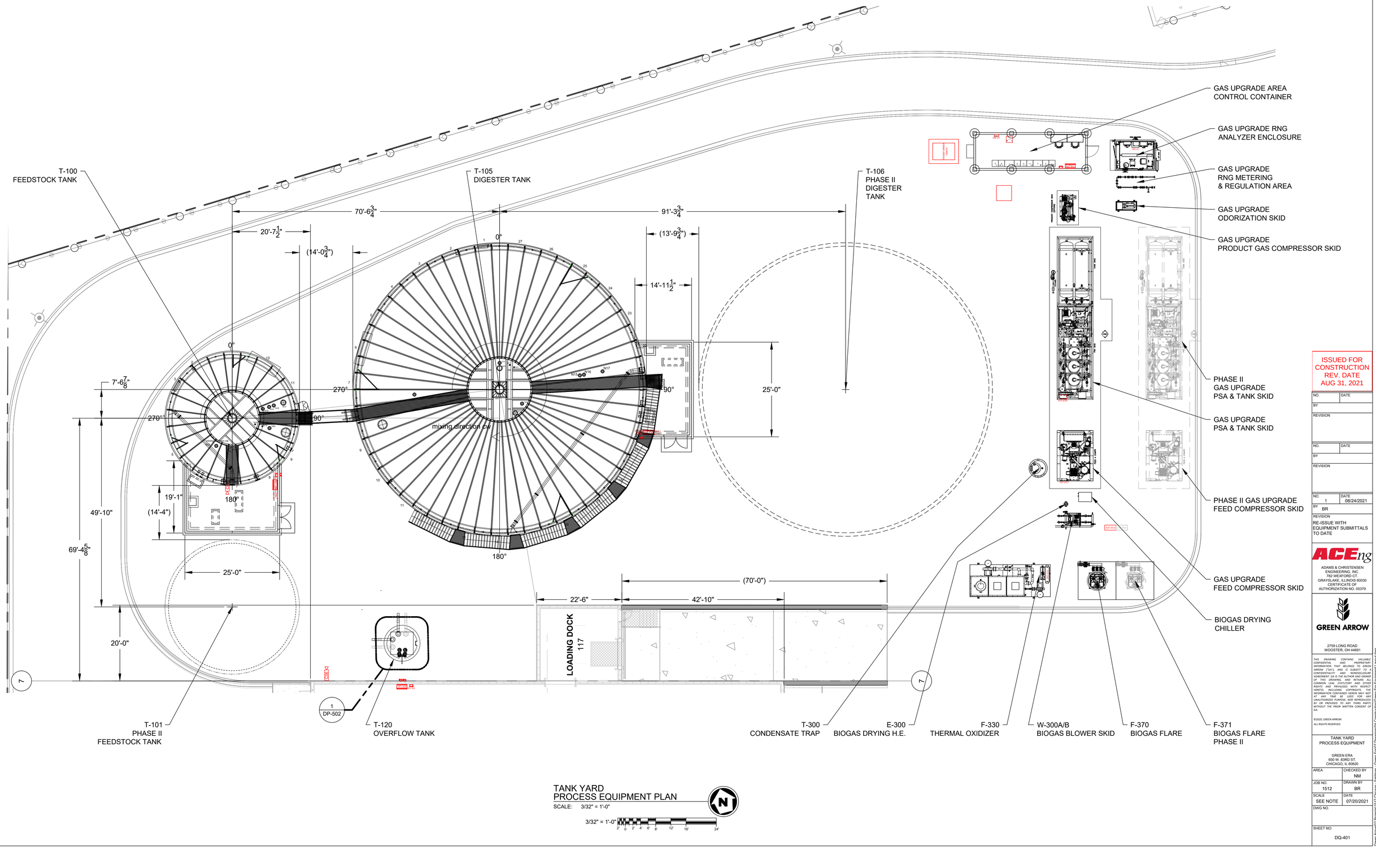

TANK YARD
PROCESS EQUIPMENT PLAN

SCALE: 3/32" = 1'-0"

3/32" = 1'-0"

ISSUED FOR CONSTRUCTION
REV. DATE
AUG 31, 2021

NO.	DATE
BY	
REVISION	
NO.	DATE
BY	
REVISION	
NO. 1	DATE 08/24/2021
BY BR	
REVISION RE-ISSUE WITH EQUIPMENT SUBMITTALS TO DATE	

ACEng
ADAMS & CHRISTENSEN ENGINEERING, INC.
782 WEXFORD CT.
GRAYSLAKE, ILLINOIS 60030
CERTIFICATE OF AUTHORIZATION NO. 05379

GREEN ARROW
2759 LONG ROAD
WOOSTER, OH 44691

THIS DRAWING CONTAINS VALUABLE PROPRIETARY AND CONFIDENTIAL INFORMATION THAT BELONGS TO GREEN ARROW ("GA"), AND IS SUBJECT TO A CONFIDENTIALITY AND NONDISCLOSURE AGREEMENT. GA IS THE AUTHOR AND OWNER OF THIS DRAWING, AND RETAINS ALL COMMON LAW, STATUTORY AND OTHER RIGHTS, INCLUDING COPYRIGHTS THEREIN. THE INFORMATION CONTAINED HEREIN MAY NOT AT ANY TIME BE USED FOR ANY UNAUTHORIZED PURPOSE, NOR REPRODUCED BY OR PROVIDED TO ANY THIRD PARTY, WITHOUT THE PRIOR WRITTEN CONSENT OF GA.

©2020, GREEN ARROW.
ALL RIGHTS RESERVED.

TANK YARD
PROCESS EQUIPMENT

GREEN ERA
650 W. 83RD ST.
CHICAGO, IL 60620

AREA	CHECKED BY
	NM
JOB NO. 1512	DRAWN BY BR
SCALE SEE NOTE	DATE 07/20/2021
DWG NO.	
SHEET NO. DQ-401	

Green Arrow\02 Projects\1512 Chicago - Feldman - Green Era\07 Drawings\04 Construction\Green Era Equipment Layout.dwg

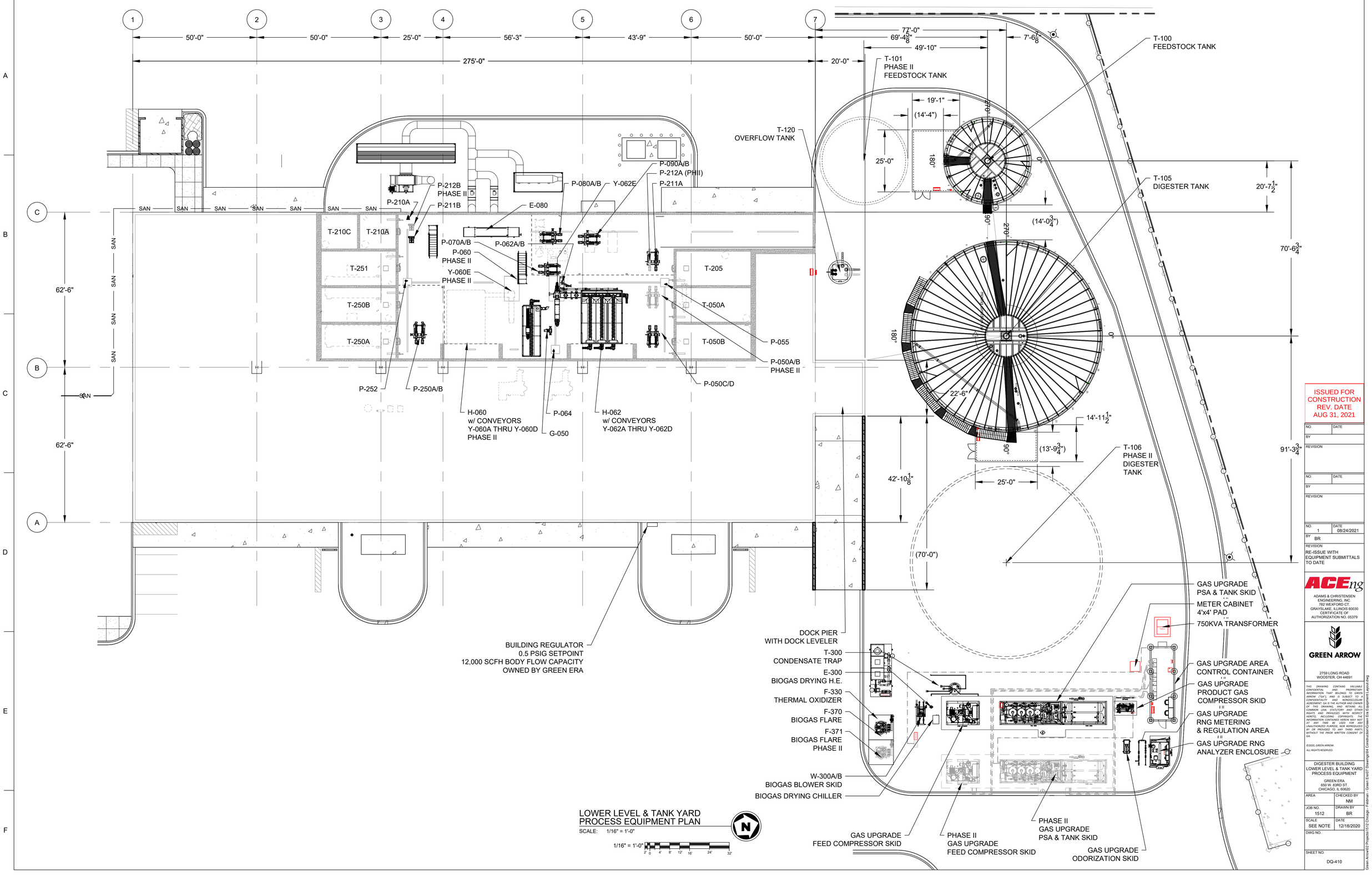

ISSUED FOR CONSTRUCTION
REV. DATE
AUG 31, 2021

NO.	DATE
BY	
REVISION	

NO.	DATE
BY	
REVISION	

NO.	DATE
1	08/24/2021

BY BR

REVISION
RE-ISSUE WITH EQUIPMENT SUBMITTALS TO DATE

ACEng
ADAMS & CHRISTENSEN ENGINEERING, INC.
782 WEXFORD CT.
GRAYSLAKE, ILLINOIS 60030
CERTIFICATE OF AUTHORIZATION NO. 05379

GREEN ARROW
2759 LONG ROAD
WOOSTER, OH 44691

THIS DRAWING CONTAINS VALUABLE CONFIDENTIAL AND PROPRIETARY INFORMATION THAT BELONGS TO GREEN ARROW ("GA") AND IS SUBJECT TO A CONFIDENTIALITY AND NONDISCLOSURE AGREEMENT. GA IS THE AUTHOR AND OWNER OF THIS DRAWING, AND RETAINS ALL COMMON LAW, STATUTORY AND OTHER RIGHTS AND PRIVILEGES WITH RESPECT HERETO, INCLUDING COPYRIGHTS. THE INFORMATION CONTAINED HEREIN MAY NOT AT ANY TIME BE USED FOR ANY UNAUTHORIZED PURPOSE, NOR REPRODUCED BY OR PROVIDED TO ANY THIRD PARTY, WITHOUT THE PRIOR WRITTEN CONSENT OF GA.

©2020, GREEN ARROW.
ALL RIGHTS RESERVED.

DIGESTER BUILDING
LOWER LEVEL & TANK YARD
PROCESS EQUIPMENT

GREEN ERA
650 W. 83RD ST.
CHICAGO, IL 60620

AREA	CHECKED BY
	NM
JOB NO. 1512	DRAWN BY BR
SCALE SEE NOTE	DATE 12/18/2020
DWG NO.	
SHEET NO. DQ-410	

Green Arrow\02 Projects\1512 Chicago - Feldman - Green Era\07 Drawings\04 Construction\Green Era Equipment Layout.dwg

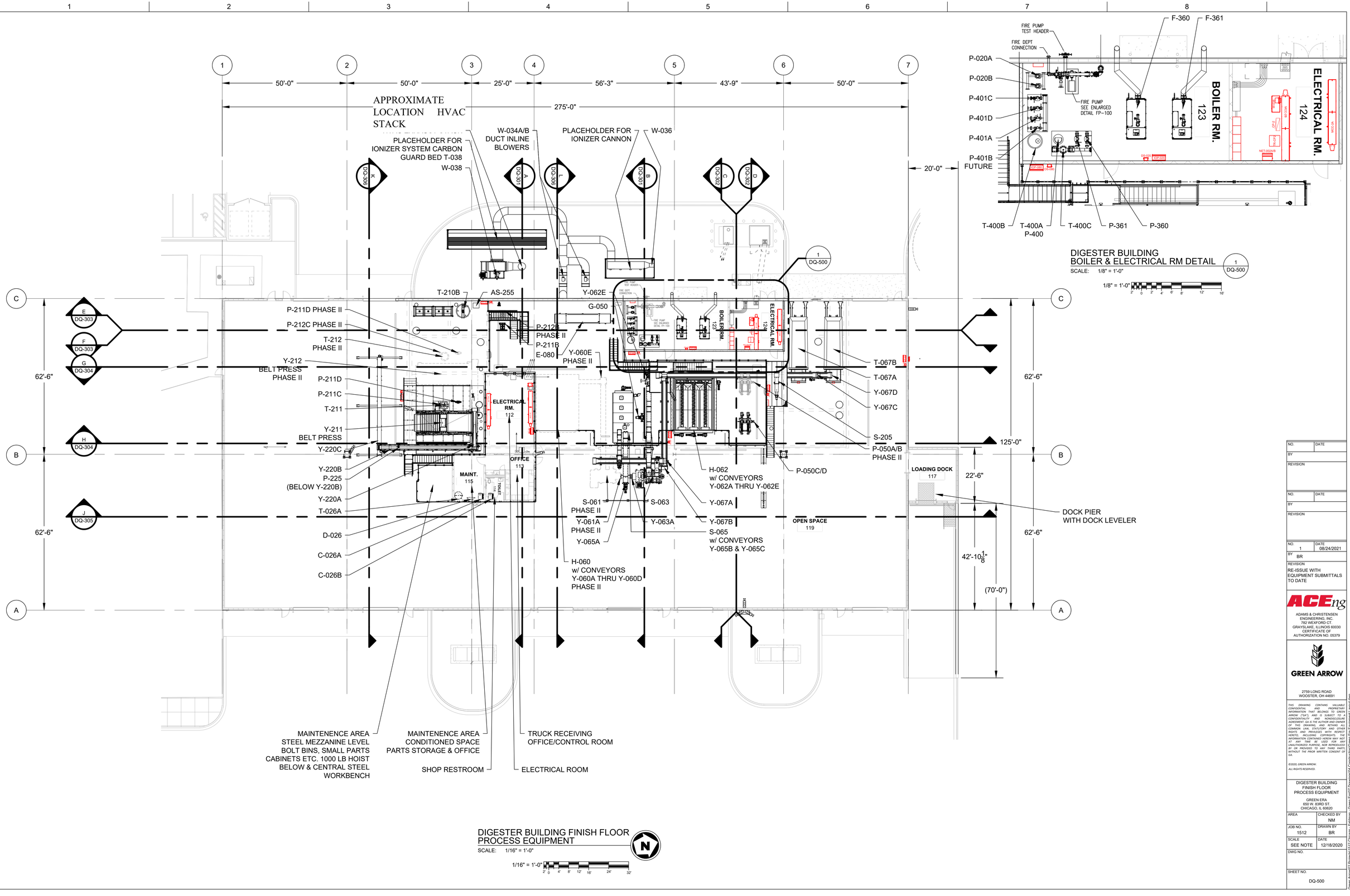

DIGESTER BUILDING FINISH FLOOR PROCESS EQUIPMENT

SCALE: 1/16" = 1'-0"

1/16" = 1'-0" (2' 0 4' 8' 12' 16' 24' 32')

DIGESTER BUILDING BOILER & ELECTRICAL RM DETAIL

SCALE: 1/8" = 1'-0"

1/8" = 1'-0" (2' 0 2' 4' 6' 8' 12' 16')

NO.	DATE
BY	
REVISION	

NO.	DATE
BY	
REVISION	

NO.	DATE
1	08/24/2021
BY	
BR	
REVISION	
RE-ISSUE WITH EQUIPMENT SUBMITTALS TO DATE	

ACEng
ADAMS & CHRISTENSEN ENGINEERING, INC.
782 WEXFORD CT.
GRAYSLAKE, ILLINOIS 60030
CERTIFICATE OF AUTHORIZATION NO. 05379

GREEN ARROW
2759 LONG ROAD
WOOSTER, OH 44691

THIS DRAWING CONTAINS VALUABLE CONFIDENTIAL AND PROPRIETARY INFORMATION THAT BELONGS TO GREEN ARROW ("GA"), AND IS SUBJECT TO A CONFIDENTIALITY AND NONDISCLOSURE AGREEMENT. GA IS THE AUTHOR AND OWNER OF THIS DRAWING AND ALL RIGHTS UNDER COMMON LAW, STATUTORY AND OTHER RIGHTS AND PRIVILEGES WITH RESPECT HERETO, INCLUDING COPYRIGHTS. THE INFORMATION CONTAINED HEREIN MAY NOT BE USED, DISCLOSED, REPRODUCED, IN WHOLE OR IN PART, FOR ANY PURPOSE, AND IS PROHIBITED BY GA PROVIDED TO ANY THIRD PARTY, WITHOUT THE PRIOR WRITTEN CONSENT OF GA.

©2020, GREEN ARROW.
ALL RIGHTS RESERVED.

DIGESTER BUILDING FINISH FLOOR PROCESS EQUIPMENT

GREEN ERA
650 W. 83RD ST.
CHICAGO, IL 60620

AREA	CHECKED BY
	NM
JOB NO.	DRAWN BY
1512	BR
SCALE	DATE
SEE NOTE	12/18/2020
DWG NO.	
SHEET NO.	
DQ-500	

Green Arrow\02 Projects\1512 Chicago - Feldman - Green Era\07 Drawings\04 Construction\Green Era Equipment Layout.dwg

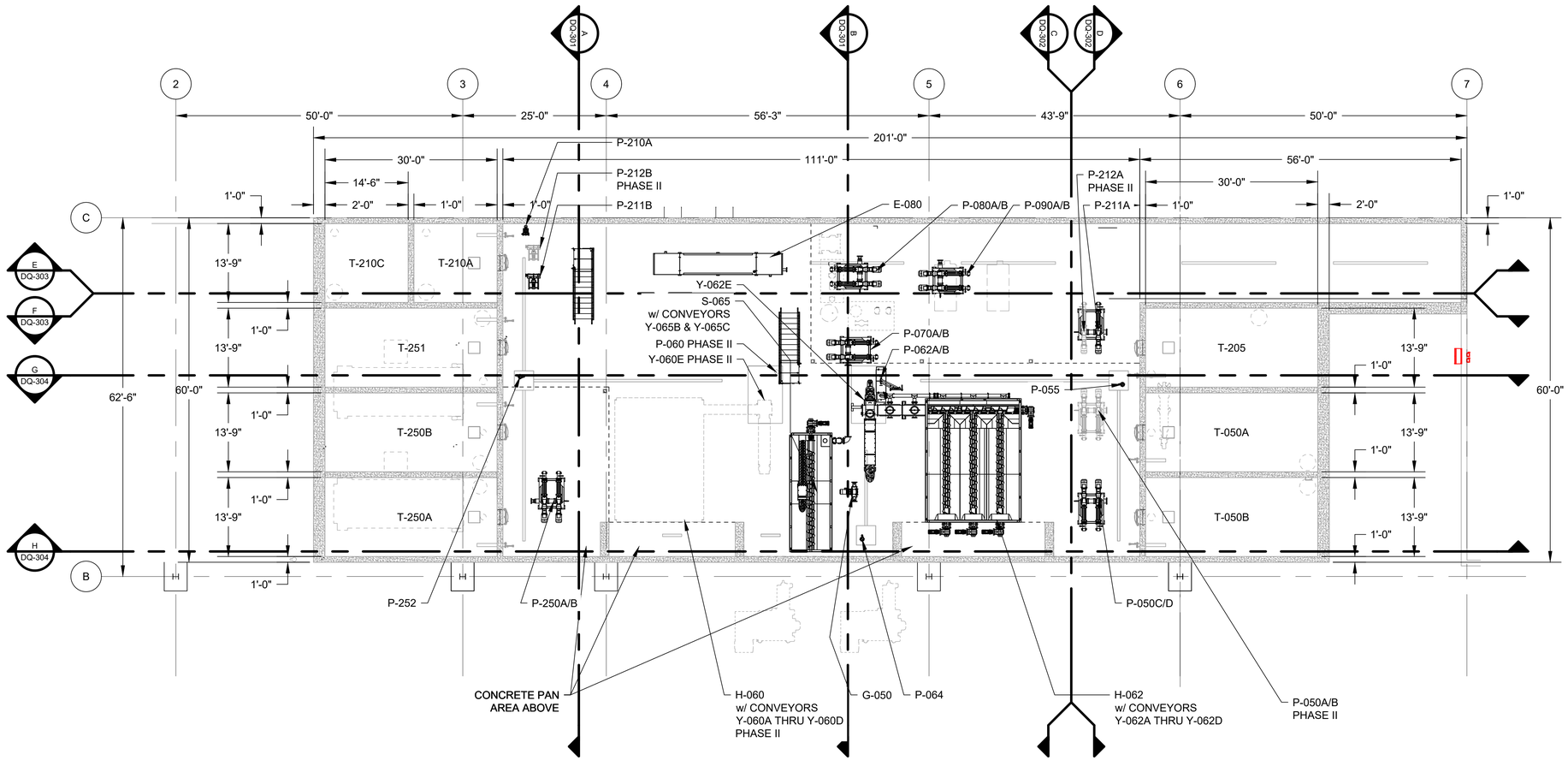

DIGESTER BUILDING LOWER LEVEL
PROCESS EQUIPMENT

SCALE: 3/32" = 1'-0"

3/32" = 1'-0"

2' 0 2' 4' 6' 8' 12' 16' 24'

NO.	DATE
BY	
REVISION	
NO.	DATE
BY	
REVISION	
NO. 1	DATE 08/24/2021
BY BR	
REVISION RE-ISSUE WITH EQUIPMENT SUBMITTALS TO DATE	

ACEng
ADAMS & CHRISTENSEN ENGINEERING, INC.
782 WEXFORD CT.
GRAYSLAKE, ILLINOIS 60030
CERTIFICATE OF AUTHORIZATION NO. 05379

GREEN ARROW
2759 LONG ROAD
WOOSTER, OH 44691

THIS DRAWING CONTAINS VALUABLE CONFIDENTIAL AND PROPRIETARY INFORMATION THAT IS PROPERTY OF GREEN ARROW ("GA") AND IS SUBJECT TO A CONFIDENTIALITY AND NONDISCLOSURE AGREEMENT. GA IS THE AUTHOR AND OWNER OF THIS DRAWING, AND RETAINS ALL COMMON LAW, STATUTORY AND OTHER RIGHTS AND PRIVILEGES WITH RESPECT TO THE USE OF THE DRAWING. THE INFORMATION CONTAINED HEREIN MAY NOT AT ANY TIME BE USED FOR ANY UNAUTHORIZED PURPOSE, NOR REPRODUCED BY OR PROVIDED TO ANY THIRD PARTY, WITHOUT THE PRIOR WRITTEN CONSENT OF GA.

©2020, GREEN ARROW.
ALL RIGHTS RESERVED.

DIGESTER BUILDING
LOWER LEVEL
PROCESS EQUIPMENT

GREEN ERA
650 W. 83RD ST.
CHICAGO, IL 60620

AREA	CHECKED BY NM
JOB NO. 1512	DRAWN BY BR
SCALE SEE NOTE	DATE 12/18/2020
DWG NO.	
SHEET NO. DQ-510	

Green Arrow\02 Projects\1512 Chicago - Feldman - Green Era\07 Drawings\04 Construction\Green Era Equipment Layout.dwg

PIPE NO.	Tag	From	To	P&ID DWG Number	Service	Size	Spec	RUN LENGTH (FT)	NOTES
1	8"-BIP-SL-500C	8"-BIP-SL-500E	8"-BIP-SL-500F	1050-001	SL	8"	BIP	15' 10"	
2	8"-BIP-SL-500E	T-050A	P-050A/B	1050-001	SL	8"	BIP	8' 9"	
3	8"-BIP-SL-500F	T-050B	P-050C/D	1050-001	SL	8"	BIP	8' 9"	
4	6"-BIP-SL-505	P-050A/B	S-061	1050-001	SL	6"	BIP	115' 0"	
5	6"-BIP-SL-507	P-050C/D	S-063	1050-001	SL	6"	BIP	80' 0"	
6	6"-BIP-SL-504A	6"-BIP-SL-505	6"-BIP-SL-504C	1050-001	SL	6"	BIP	8' 0"	PHASE II
7	6"-BIP-SL-504C	6"-BIP-SL-507	G-050	1050-001	SL	6"	BIP	25' 0"	
8	6"-BIP-SL-506	G-050	T-065A	1050-001	SL	6"	BIP	21' 5"	
9	2"-PVC-DR-551	P-055	T-050A	1055-001	DR	2"	PVC	22' 10"	
10	2"-PVC-DR-603	P-060	T-050A	1060-001	DR	2"	PVC	87' 9"	PHASE II
11	2"-PVC-DR-623	P-062	T-050A	1062-001	DR	2"	PVC	73' 4"	
12	2"-PVC-DR-641	P-064	T-065A	1064-001	DR	2"	PVC	21' 7"	
13	6"-BIP-SL-651	T-065A	P-070A/B	1065-001	SL	6"	BIP	20' 0"	
14	6"-BIP-SL-700A	P-070A/B	YARD PIPING	1070-001	SL	6"	BIP	135' 0"	
15	6"-DI-SL-703	P-070A/B	T-100	1070-001	SL	6"	DI	81' 6"	
16	6"-DI-SL-704	YARD WYE	T-105	1070-001	SL	6"	DI	152' 0"	
17	6"-DI-SL-1102	T-100	BLDG	1080-001	SL	6"	DI	80' 0"	
18	6"-DI-SL-1152	T-105	YARD WYE	1080-001	SL	6"	DI	145' 0"	
19	6"-BIP-SL-800A	YARD	P-080A/B	1080-001	SL	6"	BIP	116' 0"	
20	6"-BIP-SL-800B	P-080A/B	E-080	1080-001	SL	6"	BIP	15' 0"	
21	6"-BIP-SL-800C	E-080	YARD PIPING	1080-001	SL	6"	BIP	122' 0"	
22	6"-DI-SL-803	E-080	T-100	1080-001	SL	6"	DI	80' 0"	
23	6"-DI-SL-804	YARD WYE	T-105	1080-001	SL	6"	DI	152' 0"	
24	6"-BIP-SL-500B	TRUCK CONNECTION	8"-BIP-SL-500C	1080-001	SL	6"	BIP	17' 0"	TRUCK DIRECT SUCTION HOOKUP
25	6"-BIP-SL-800D	E-080	6"-BIP-SL-900B	1050-001	SL	6"	BIP	8' 0"	BYPASS CONNECTION
26	6"-DI-SL-1103	T-100	BLDG	1090-001	SL	6"	DI	77' 0"	
27	6"-DI-SL-1153	T-105	YARD WYE	1090-001	SL	6"	DI	143' 0"	
28	6"-BIP-SL-900A	YARD	P-090A/B	1090-001	SL	6"	BIP	105' 0"	
29	6"-BIP-SL-900B	P-090A/B	YARD PIPING	1090-001	SL	6"	BIP	100' 0"	
30	6"-DI-SL-903	P-090A/B YARD	T-100	1090-001	SL	6"	DI	77' 0"	
31	6"-DI-SL-904	YARD WYE	T-105	1090-001	SL	6"	DI	151' 0"	
32	6"-BIP-SL-908	6"-BIP-SL-900C	8"-BIP-SL-500C	1090-001	SL	6"	BIP	40' 6"	
33	6"-BIP-SL-909	6"-BIP-SL-908	S-205	1090-001	SL	6"	BIP	25' 6"	
34	6"-HDPE-SL-1007	T-100	T-120	1120-001	SL	6"	HDPE	72' 0"	
35	6"-HDPE-SL-1059B	T-105	T-120	1120-001	SL	6"	HDPE	40' 0"	
36	2"-PVC-DR-1205	P-120A/B	T-050A	1120-001	DR	2"	PVC	111' 0"	
37	6"-BIP-SL-2050C	S-205	T-205	1205-001	SL	6"	BIP	30' 3"	
38	8"-BIP-SL-2051	T-205	P-211A/P-212A	1205-001	SL	8"	BIP	8' 9"	
39	3/4"-SST-PY-2100A	T-210A	P-210A	1210-001	PY	3/4"	SST	2' 11"	
40	3/4"-SST-PY-2100B	P-210A	VT-210	1210-001	PY	3/4"	SST	34' 11"	
41	3"-SS10-PY-2101B	T-210B	2"-SS10-PY-2102	1210-001	PY	3"	SS10	32' 0"	
42	2"-SS10-PY-2102	3"-SS10-PY-2101B	P-211B	1210-001	PY	2"	SS10	3' 11"	
43	2"-SS10-PY-2110B	P-211B	VT-211	1211-001	PY	2"	SS10	57' 11"	
44	6"-BIP-SL-2110A	P-211A	T-211	1211-001	SL	6"	BIP	183' 0"	
45	2"-BIP-SL-2112A	T-211	P-211D	1211-001	SL	2"	BIP	9' 1"	
46	2"-BIP-SL-2112B	P-211D	2"-PVC-DR-2521	1211-001	SL	2"	BIP	54' 3"	
47	2"-SS10-PY-2120B	P-212B	VT-212	1211-001	PY	2"	SS10	35' 0"	PHASE II
48	6"-BIP-SL-2120A	P-212A	T-212	1211-001	SL	6"	BIP	160' 6"	PHASE II
49	2"-BIP-SL-2122A	T-212	P-211D	1211-001	SL	2"	BIP	9' 5"	PHASE II
50	2"-BIP-SL-2122B	P-211D	2"-PVC-DR-2521	1211-001	SL	2"	BIP	29' 1"	PHASE II
51	2"-PVC-DR-2251	P-225	2"-PVC-DR-2521	12255-001	DR	2"	PVC	96' 0"	
52	6"-BIP-FT-2500A	T-250A	P-250A/B	1250-001	FT	6"	BIP	7' 11"	
53	6"-BIP-FT-2500B	T-250B	6"-BIP-FT-2500A	1250-001	FT	6"	BIP	13' 5"	
54	6"-BIP-FT-2500E	P-250A/B	FT-250	1250-001	FT	6"	BIP	25' 0"	
55	6"-BIP-FT-2503	FT-250	FT-255	1250-001	FT	6"	BIP	22' 0"	
56	6"-BIP-FT-2504	6"-BIP-FT-2500E	T-050A	1250-001	FT	6"	BIP	166' 0"	
57	6"-BIP-FT-2501	FT-255	YARD	1255-001	FT	6"	BIP	15' 0"	
58	2"-PVC-DR-2521	P-252	T-050A	1252-001	DR	2"	PVC	182' 0"	
59	3"-BIP-GLR-4001	6"-BIP-GLR-4000B	P-360	1360-001	GLR	3"	BIP	2' 6"	
60	4"-BIP-GLR-3601A	P-360	F-360	1360-001	GLR	4"	BIP	21' 11"	
61	4"-BIP-GLS-3601B	F-360	6"-BIP-GLS-4000A	1360-001	GLS	4"	BIP	17' 9"	
62	3"-BIP-GLR-4002	6"-BIP-GLR-4000B	P-361	1360-001	GLR	3"	BIP	2' 6"	PHASE II
63	4"-BIP-GLR-3611A	P-361	F-361	1360-001	GLR	4"	BIP	28' 9"	PHASE II
64	4"-BIP-GLS-3611B	F-361	6"-BIP-GLS-4000A	1360-001	GLS	4"	BIP	17' 9"	PHASE II
65	6"-BIP-GLS-4000A	BOILERS	T-400C	1400-001	GLS	6"	BIP	30' 9"	
66	6"-BIP-GLR-4000B	T-400C	BOILER PUMPS	1400-001	GLR	6"	BIP	5' 10"	
67	6"-BIP-GLS-4000C	T-400C	INJECTION PUMPS	1400-001	GLS	6"	BIP	15' 9"	
68	6"-BIP-GLR-4000D	HEAT LOOPS	T-400C	1400-001	GLR	6"	BIP	23' 4"	
69	2"-BIP-GLS-4011A	6"-BIP-GLS-4000C	P-401A	1401-001	GLS	2"	BIP	1' 0"	
70	3"-BIP-GLS-4011B	P-401A	E-080	1401-001	GLS	3"	BIP	17' 6"	
71	3"-BIP-GLR-806	E-080	6"-BIP-GLR-4000D	1401-001	GLR	3"	BIP	32' 6"	
72	2"-BIP-GLS-4012A	6"-BIP-GLS-4000C	P-401B	1401-001	GLS	2"	BIP	1' 0"	
73	3"-BIP-GLS-4011B	P-401B	E-080	1401-001	GLS	3"	BIP	46' 6"	
74	3"-BIP-GLR-807	E-080	6"-BIP-GLR-4000D	1401-001	GLR	3"	BIP	20' 0"	
75	3"-BIP-GLS-4013A	6"-BIP-GLS-4000C	P-401C	1401-001	GLS	3"	BIP	0' 11"	
76	4"-BIP-GLS-4013B	P-401C	YARD PIPING	1401-001	GLS	4"	BIP	129' 6"	
77	4"-PEX-GLS-4013B	YARD PIPING	T-100	1100-001	GLS	4"	PEX	92' 6"	
78	4"-PEX-GLR-1005B	T-100	BUILDING	1100-001	GLR	4"	PEX	93' 0"	
79	4"-BIP-GLR-1005B	YARD	6"-BIP-GLR-4000D	1401-001	GLR	4"	BIP	123' 6"	
80	3"-BIP-GLS-4014A	6"-BIP-GLS-4000C	P-401D	1401-001	GLS	3"	BIP	0' 11"	
81	4"-BIP-GLS-4014B	P-401D	YARD PIPING	1401-001	GLS	4"	BIP	128' 6"	
82	4"-PEX-GLS-4014B	YARD PIPING	T-105	1105-001	GLS	4"	PEX	166' 0"	
83	4"-PEX-GLR-1055B	T-105	BUILDING	1105-001	GLR	4"	PEX	164' 6"	
84	4"-BIP-GLR-1055B	YARD	6"-BIP-GLR-4000D	1105-001	GLR	4"	BIP	128' 0"	
85	4"-PVC-MW-200A	WATER SUPPLY	FT-020A	1020-001	MW	4"	PVC	3' 0"	
86	4"-PVC-MW-200B	FT-020A	P-020A/B	1020-001	MW	4"	PVC	20' 0"	
87	4"-PVC-MW-200F	P-020A/B	BOOSTER MANIFOLD	1020-001	MW	4"	PVC	21' 4"	
88	1"-PVC-PW-4000E	T-400B	6"-BIP-GLR-4000D	1400-001	PW	1"	PVC	9' 11"	
89	1/2"-PVC-PW-4000F	T-400A	1"-PVC-PW-4000E	1400-001	PW	1/2"	PVC	7' 9"	
90	1"-PVC-PW-4000G	BOOSTER MANIFOLD	1"-PVC-PW-4000E	1400-001	PW	1"	PVC	8' 6"	
91	4"-PVC-MW-200G	BOOSTER MANIFOLD	BELT PRESS AREA	1020-001	MW	4"	PVC	98' 0"	
92	2"-PVC-MW-204B	BELT PRESS TRUNK	T-210B	1210-001	MW	2"	PVC	21' 10"	
93	2"-PVC-MW-205A	BELT PRESS TRUNK	P-211C	1211-001	MW	2"	PVC	48' 3"	
94	2"-PVC-MW-205B	BELT PRESS TRUNK	P-212C	1212-001	MW	2"	PVC	17' 7"	PHASE II
95	4"-PVC-MW-200H	BOOSTER MANIFOLD	BASEMENT TRUNK	1020-001	MW	4"	PVC	5' 10"	
96	1 1/2"-PVC-MW-203	BASEMENT TRUNK	YARD	1020-001	MW	1 1/2"	PVC	55' 3"	
97	1 1/2"-HDPE-MW-203	YARD	T-100	1020-001	MW	1 1/2"	HDPE	73' 0"	
98	1 1/2"-HDPE-MW-1005	YARD WYE	T-105	1100-001	MW	1 1/2"	HDPE	166' 0"	
99	4"-PVC-MW-200I	BASEMENT TRUNK	MILL TRUNK	1020-001	MW	4"	PVC	26' 0"	

PIPE NO.	Tag	From	To	P&ID DWG Number	Service	Size	Spec	RUN LENGTH (FT)	NOTES
100	2"-PVC-MW-202A	MILL TRUNK	S-061	1061-001	MW	2"	PVC	77' 9"	PHASE II
101	2"-PVC-MW-202B	MILL TRUNK	S-063	1063-001	MW	2"	PVC	50' 0"	
102	6"-SS10-BG-1008	T-100	T-105	1100-001	BG	6"	SS10	49' 9"	
103	6"-HDPE-BG-1057B	T-105	T-300	1105-001	BG	6"	HDPE	150' 0"	
104	6"-HDPE-BG-1058B	T-105	T-300	1105-001	BG	6"	HDPE	150' 0"	
105	8"-HDPE-BG-3000C	T-300	8"-SS10-BG-3000C	1300-001	BG	8"	HDPE	12' 0"	
106	8"-HDPE-BG-3000D	T-300	8"-SS10-BG-3000D	1300-001	BG	8"	HDPE	12' 0"	
107	8"-SS10-BG-3000C	8"-HDPE-BG-3000C	E-300 MANIFOLD	1300-001	BG	8"	SS10	4' 0"	
108	8"-SS10-BG-3000D	8"-HDPE-BG-3000D	E-300 MANIFOLD	1300-001	BG	8"	SS10	6' 0"	
109	8"-SS10-BG-3000E	E-300 MANIFOLD	E-300 MANIFOLD	1300-001	BG	8"	SS10	8' 0"	
110	6"-SS10-BG-3000F	E-300 MANIFOLD	E-300	1300-001	BG	6"	SS10	4' 0"	
111	6"-SS10-BG-3001	E-300	W-302A/B	1302-001	BG	6"	SS10	4' 0"	
112	6"-HDPE-BG-3002	E-300 MANIFOLD	6"-SS10-BG-3002	1300-001	BG	6"	HDPE	20' 0"	
113	2"-PVC-DR-3003	P-300	T-050A VIA 2"-PVC-DR-1205	1300-001	DR	2"	PVC	220' 0"	
114	6"-SS10-BG-3002	6"-HDPE-BG-3002	W-302A/B MANIFOLD	1302-001	BG	6"	SS10	12' 0"	
115	6"-SS10-BG-3021	W-302A/B MANIFOLD	GAS UPGRADE 1	1302-001	BG	6"	SS10	40' 0"	
116	6"-SS10-BG-3022	W-302A/B MANIFOLD	F-370	1302-001	BG	6"	SS10	20' 0"	
117	4"-SS10-BG-3023	W-302A/B MANIFOLD	F-371	1302-001	BG	4"	SS10	30' 0"	
118	6"-SS10-BG-3024	W-302A/B MANIFOLD	GAS UPGRADE 2	1302-001	BG	6"	SS10	60' 0"	
119		FEED COMPRESSOR	PSA SKID INLET FILTER		BG	3"	SS10	40' 0"	
120		FEED COMPRESSOR	TG TO F-330		BG	1/2"	SS10	15' 0"	
121		PSA SKID INLET FILTER	PSA SKID		BG	3"	SS10	10' 0"	
122		PSA SKID	FEED COMPRESSOR INLET		BG	3"	SS10	55' 0"	
123		PSA SKID	TG TO TG FLOW METER		BG	2"	SS10	8' 0"	
124		TG TO TG FLOW METER	TG TO F-330		BG	2"	SS10	150' 0"	
125		PSA SKID	PRODUCT COMPRESSOR		BG	3"	SS10	75' 0"	
126		PRODUCT COMPRESSOR	GAS METERING & ANALYSIS		BG	2"	SS10	80' 0"	
127		FEED COMPRESSOR	PSA SKID INLET FILTER		BG	3"	SS10	40' 0"	PHASE II
128		FEED COMPRESSOR	TG TO F-330		BG	1/2"	SS10	60' 0"	PHASE II
129		PSA SKID INLET FILTER	PSA SKID		BG	3"	SS10	10' 0"	PHASE II
130		PSA SKID	FEED COMPRESSOR INLET		BG	3"	SS10	55' 0"	PHASE II
131		PSA SKID	TG TO TG FLOW METER		BG	2"	SS10	8' 0"	PHASE II
132		TG TO TG FLOW METER	TG TO F-330		BG	2"	SS10	45' 0"	PHASE II
133		PSA SKID	PRODUCT COMPRESSOR		BG	3"	SS10	20' 0"	PHASE II

Size	Spec	TOTAL RUN LENGTH (FT)
2"	BIP	103' 10"
3"	BIP	123' 3"
4"	BIP	595' 8"
6"	BIP	1652' 3"
8"	BIP	42' 1"
6"	DI	1138' 6"
1 1/2"	HDPE	239' 0"
6"	HDPE	432' 0"
8"	HDPE	24' 0"
4"	PEX	516' 0"
1/2"	PVC	7' 9"
1"	PVC	18' 5"
1 1/2"	PVC	55' 3"
2"	PVC	1029' 11"
4"	PVC	174' 2"
6"	PVC	0' 0"
8"	PVC	0' 0"
3/4"	SST	37' 10"
1/2"	SS10	75' 0"
2"	SS10	387' 10"
3"	SS10	337' 0"
4"	SS10	30' 0"
6"	SS10	189' 9"

ISSUED FOR CONSTRUCTION
REV. DATE
AUG 31, 2021

NO.	DATE
BY	
REVISION	

NO.	DATE
BY	
REVISION	

NO.	DATE
BY	
REVISION	

ACEng
ADAMS & CHRISTENSEN ENGINEERING, INC.
782 WEXFORD CT.
GRAYSLAKE, ILLINOIS 60030
CERTIFICATE OF AUTHORIZATION NO. 05379

GREEN ARROW
2759 LONG ROAD
WOOSTER, OH 44691

THIS DRAWING CONTAINS VALUABLE CONFIDENTIAL AND PROPRIETARY INFORMATION THAT BELONGS TO GREEN ARROW ("GA"), AND IS SUBJECT TO A CONFIDENTIALITY AND NON-DISCLOSURE AGREEMENT. GA IS THE AUTHOR AND OWNER OF THIS DRAWING, AND RETAINS ALL COMMON LAW, STATUTORY AND OTHER RIGHTS AND PRIVILEGES WITH RESPECT HERETO, INCLUDING COPYRIGHTS. THE INFORMATION CONTAINED HEREIN MAY NOT BE USED, IN WHOLE OR IN PART, FOR ANY UNAUTHORIZED PURPOSE, NOR REPRODUCED BY OR PROVIDED TO ANY THIRD PARTY, WITHOUT THE PRIOR WRITTEN CONSENT OF GA.

©2020, GREEN ARROW.
ALL RIGHTS RESERVED.

DIGESTER BUILDING
& TANK YARD
PROCESS PIPING

GREEN ERA
650 W. 83RD ST.
CHICAGO, IL 60620

AREA	CHECKED BY
	NM
JOB NO.	DRAWN BY
1512	BR
SCALE	DATE
SEE NOTE	04/11/2021
DWG NO.	
SHEET NO.	
DP-001	

Green Arrow\02 Projects\1512 Chicago - Feldmeir - Green Era\07 Drawings\04 Construction\Green Era Equipment Layout.dwg

SECTION 16.1
SPECIFICATIONS FOR
BURIED PIPE INSTALLATION

PART 1 - GENERAL

1.01 WORK INCLUDED

A. Excavation for underground piping.

B. Placement of bedding under piping.

C. Placement of buried piping.

D. Placement and compaction of fill and over piping.

E. Restoration.

1.02 REFERENCES

A. ANSI/ASTM C 136 - Method for Sieve Analysis of Fine and Course Aggregates.

B. ANSI/ASTM D 1557 - Test Methods for Moisture Density Relations of Soils and Soil Aggregate Mixtures Using 10 pound (4.54 kg) Rammer and 18 inch (457 mm) Drop.

C. ANSI/ASTM D 2922 - Test Methods for Density of Soil and Soil Aggregate in Place by Nuclear Methods.

D. Illinois Department of Transportation (IDOT) Construction and Material Specifications.

1.03 RELATED SECTIONS

A. Section 16.4 - Piping and Fittings

1.04 PROJECT RECORD DOCUMENTS

A. Accurately record location of pipe runs, connections, manholes, cleanouts, and invert elevations.

B. Identify and describe unexpected variations to subsoil conditions or discovery of uncharted utilities.

PART 2 - PRODUCTS

2.01 PIPE MATERIALS

A. See Section 16.4 for piping material requirements

2.02 COATINGS

A. Exposed piping and fittings shall be coated in accordance with manufacturer's recommendations.

2.03 PIPE TRENCH AND BACKFILL AND BEDDING MATERIALS

A. Bedding: 3/4 inch (20 millimeter) crushed stone or pea gravel.

B. Backfill: 3/4 inch (20 millimeter) crushed stone, pea gravel, or natural soils.

C. Topsoil.

D. Pipe Bedding materials shall meet the requirements of the details as indicated on the plans and be free of rocks, sticks or other objects that could be harmful to the pipe. If no detail is shown, material shall meet the requirements of clean granular material.

PART 3 - EXECUTION

3.01 EXAMINATION

A. Verify that excavation base is ready to receive work, and excavations, dimensions, and elevations are as indicated on Drawings.

3.02 PREPARATION

A. Hand trim excavations to required elevations. Correct over excavation with material as specified.

B. Remove large stones or other hard matter which could damage drainage pipe or impede consistent backfilling or compaction.

3.03 EXECUTION

A. Identify required lines, levels, contours, and datum.

B. Existing Utilities, Piping, and Structures
1. Existing Utilities:
   a. Existing structures, utilities, and piping are shown on the Drawings only by general location. The Owner does not guarantee the locations as shown on the Drawings, and the Contractor shall be solely responsible for verifying the exact location of each of these utilities, without additional compensation.
   b. The Contractor shall have sole responsibility for providing temporary support and for protecting and maintaining all existing utilities, piping, and structures in the project area during the entire period of construction, including but not limited to the period of excavation, installation, backfill and compaction. In carrying out this responsibility, the Contractor shall exercise particular care, whenever gas mains or other utility lines are crossed, to provide compacted backfill or other stable support for such lines to prevent any detrimental displacement, rupture or other failure.
2. Subsurface Exploration:
   a. It shall be the Contractor's responsibility to determine and verify the location of existing pipes, valves or other underground structures as necessary to progress with the work with no additional compensation allowed. The Owner shall make all known records available. All known utilities are designated on the Drawings in a general way.
3. Deviations Occasioned by Other Utilities, Pipe, and Structures:
   a. Wherever existing utilities, pipe, or structures present obstructions to the grade and alignment of the pipe, they shall be permanently supported, removed, relocated or reconstructed by the Contractor through cooperation with the Owner of the utility. In those instances where their relocation or reconstruction is impracticable, a deviation from the grade will be ordered and the change shall be made in the manner directed with extra compensation allowed therefore at unit prices, if applicable.
   b. No deviation shall be made from the required line or grade except with the written consent of the Owner.

C. Determine the required clearances from new piping to existing utilities.

D. Protect benchmarks, existing structures, sidewalks, paving, and curbs from excavation equipment and vehicular traffic.

E. Saw cut any existing asphalt or concrete pavement prior to excavating.

F. Perform work during low-flow or no-flow conditions.

3.04 EXCAVATION

A. Underpin adjacent structures which may be damaged by excavation work, including utilities and pipe chases.

B. Use properly sized equipment to cut trenches sufficiently wide to enable installation of utilities and allow observation and testing of trench bottom.

C. Excavate subsoil required to accommodate site structures and construction operations.

D. Grade top perimeter of excavation to prevent surface water from draining into excavation.

E. The length of open trench shall not exceed the length of pipe that can be properly installed in a one day period. All excavations shall be backfilled prior to end of work day.

F. Notify Owner of unexpected subsurface conditions and discontinue affected Work in area until notified to resume Work.

G. Correct unauthorized excavation at not extra cost to Owner.

3.05 PROTECTION

A. Perform trench excavation adjacent to structures to prevent damage to structures. If structures are damaged by excavation, notify Owner and replace or repair.

B. Protect excavations by methods required to prevent cave in or loose soil from falling into excavation.

C. Protect excavation activities from undermining or otherwise impacting the existing underground utilities in the areas of excavation and construction.

D. Provide sheeting or bracing as necessary to protect life of property and conform to all applicable federal, provincial, and local codes.

E. Protect bottom of excavations and soil adjacent to and beneath foundations from freezing.

F. Cut out soft areas of subgrade not capable of in-place compaction. Backfill with fill and compact to density equal or greater than requirements for subsequent backfill material.

3.04 PLACEMENT OF BEDDING WITHIN TRENCHES

A. All pipeline bedding meet the requirements of Section 2.03.

B. Place pipe bedding below pipe barrel (before setting pipe) and compact to 95% of the modified Proctor maximum dry density (ASTM D 1557).

C. Cover pipe with bedding and compact to 95% of the modified Proctor maximum dry density (ASTM D 1557).

D. Employ a placement method that does not disturb or damage piping in trenches.

3.05 PLACEMENT OF PIPE WITHIN TRENCHES

A. Install pipe, fittings, and accessories in accordance with specifications and manufacturer's instructions.

B. Lay pipe to slope gradient noted on drawings and /or directed by the Owner.

C. Covering and backfilling over the pipe shall be done in accordance with the specifications.

D. Compaction of each successive lift shall refer to the specifications for compaction requirements. Do not displace or damage pipe when compacting.

E. Connect to existing piping and manholes, including all fittings, as shown in the details on the plans.

F. Contractors shall utilize laser equipment for the installation of all pipe. Pipe shall be laid at the grade indicated on the drawings. Invert elevations at each manhole shall be field verified and where deviations from plan elevations are encountered, Owner shall be notified.

3.06 BACKFILLING WITHIN TRENCHES

A. Backfill areas to contours and elevations with aggregates specified in Section 2.03 in roadway areas, roadway shoulders. Backfill grassy areas with natural soil.

B. Do not backfill over porous, wet, frozen or spongy subgrade surfaces.

C. Place and compact backfill material in continuous layers not exceeding 12 inches compacted depth.

D. Employ a placement method that does not disturb or damage piping in trenches.

E. Backfill compaction shall be to 95% of maximum dry density as determined by modified proctor test.

F. Make grade changes gradual and blend with surrounding area. Grade to drain.

G. Restore surface to pre-existing conditions.

H. Protect pipe from damage or displacement until backfilling operation is in progress.

3.07 THRUST BLOCKS

A. Ferrous under ground water pressure pipes shall have tees and bends braced with cast in place concrete thrust blocks where restraint couplings are not practical. Thrust blocks should be sized for an allowable soil bearing pressure of 2000 psf, or as listed in the soils report. Concrete thrust blocks shall be placed against undisturbed soil and constructed so that joints will be accessible for inspection.

B. Piping within vaults and pipe entrances into buildings should be restrained with socket clamps with tie rods and fittings shall have integral lugs designed for use with tie rods. In lieu of tie rods mechanical joint cast iron pipe may have tie rods threaded into flanges. Refer to Standard of the National Fire Protection Association for Outside Protection, No.24 for acceptable methods of installation.

3.08 TOLERANCES

A. Top Surface of General Backfilling: Plus or minus 1 inch from required elevations.

3.09 FIELD QUALITY CONTROL - BACKFILL

A. Tests and analysis of fill material will be performed in accordance with ANSI/ASTM D 1557.

B. If tests indicate Work does not meet specified requirements, remove Work, replace, and retest at no cost to Owner.

3.10 FIELD QUALITY CONTROL - PIPING

A. Pressure testing of pressure pipe (forcemain):
1. General: All pipeline testing shall be tested for exfiltration as specified. All pipe trenches shall be partially backfilled prior to testing. When leakage exceeds the amount allowed by the Specifications, the Contractor, at its expense, shall locate the leaks and make the necessary repairs or replacements, to reduce the leakage to the specified limits. Any individually detectable leaks shall be repaired, regardless of the results of the tests.
2. Temporary valves, plugs, bulkheads, and other pressure testing and water control equipment and materials shall be provided by the Contractor subject to Owner's review. No materials shall be used which would be injurious to pipeline structure and future function. Air test gages shall be laboratory-calibrated test gages and shall be recalibrated by a certified laboratory at the Contractor's expense prior to the leakage test, if required by Owner.
3. Unless otherwise specified, water for testing shall be furnished by the Contractor. The Contractor shall make all necessary provisions for conveying the water from the source to the points of use.
4. Release of water from pipelines, after testing has been completed, shall be performed in accordance with the Contractor's proposed testing plan as approved by Owner
5. All testing operations shall be performed in the presence of Owner.
6. Testing Procedure: The carrier pipe shall be tested for leakage as follows:
   a. Each section of carrier pipe shall be installed prior to testing.
   b. Each section of pipe shall be tested as a single unit using plugs or valves.
   c. Water shall be introduced into the isolated test section until the internal pressure stabilizes at 100 percent of the systems maximum operating pressure.
   d. Following pressure stabilization, Owner shall start a timing device for a period of 15 minutes. The pressure within the pipe shall not deviate (considering no applicable change in atmospheric conditions) by more than 2 percent during test period.
   e. If pressure deviation within the pipe exceeds the test limits as established herein, the test shall be completed again by the Contractor at their own expense.
   f. Isolated test sections found to fail pressure testing shall be repaired by the Contractor at their own expense.
   g. All testing plugs, valves, and fittings shall be subsequently removed from the discharge piping following testing.
   h. Once the pipe has been properly tested, the pipe will be installed and test again in place to ensure that all joints and appurtenances are free from leaks.

B. Testing procedures of gravity pipe
1. General: All pipeline testing shall be tested for exfiltration as specified. All pipe trenches shall be partially backfilled prior to testing. When leakage exceeds the amount allowed by the Specifications, the Contractor, at its expense, shall locate the leaks and make the necessary repairs or replacements, to reduce the leakage to the specified limits. Any individually detectable leaks shall be repaired, regardless of the results of the tests.
2. Temporary valves, plugs, bulkheads, and other pressure testing and water control equipment and materials shall be provided by the Contractor subject to Owner's review. No materials shall be used which would be injurious to pipeline structure and future function. Air test gages shall be laboratory-calibrated test gages and shall be recalibrated by a certified laboratory at the Contractor's expense prior to the leakage test, if required by Owner.
3. Unless otherwise specified, water for testing shall be furnished by the Contractor. The Contractor shall make all necessary provisions for conveying the water from the source to the points of use.
4. Release of water from pipelines, after testing has been completed, shall be performed in accordance with the Contractor's proposed testing plan as approved by Owner
5. All testing operations shall be performed in the presence of Owner.
6. Testing Procedure: The carrier pipe shall be tested for leakage as follows:
   a. Each section of carrier pipe shall be installed prior to testing.
   b. Each section of pipe shall be tested as a single unit using plugs or valves.
   c. Compressed air shall be introduced into the isolated test section until the internal pressure stabilizes at 25 psi.
   d. Following pressure stabilization, Owner shall start a timing device for a period of 15 minutes. The pressure within the pipe shall not deviate (considering no applicable change in atmospheric conditions) by more than 0.5 psi during test period.
   e. If pressure deviation within the pipe exceeds the test limits as established herein, the test shall be completed again by the Contractor at their own expense.
   f. Isolated test sections found to fail pressure testing shall be repaired by the Contractor at their own expense.
   g. All testing plugs, valves, and fittings shall be subsequently removed from the discharge piping following testing.
   h. Once the pipe has been properly tested, the pipe will be installed and test again in place to ensure that all joints and appurtenances are free from leaks.

3.11 EXCESS MATERIAL REMOVAL FROM SITE

A. Upon completion of underground construction, Contractor shall remove excess materials from site.

END OF SECTION 16.1

SECTION 16.2
SPECIFICATIONS FOR
ELECTRICAL PIPE HEAT TRACING

PART 1 - GENERAL

1.01 REQUIREMENT

A. The CONTRACTOR shall furnish and install all electric heat tracing systems for pipes, valves, fittings, and related appurtenances, as shown and required for trouble-free operation, complete and operable, all in accordance with the requirements of the Contract Documents.

1.02 RELATED WORK SPECIFIED ELSEWHERE

A. The work of the following Division or Sections applies to the work of this Section. Other Sections of the Specifications, not referenced below, shall also apply to the extent required for proper performance of this WORK.
1. Section 16.3 - Pipe Insulation and Cladding
2. Section 26 - Special - Electrical and Control Work

1.03 REFERENCE SPECIFICATIONS, CODES, AND STANDARDS

A. Without limiting the generality of other requirements of these Specifications, all work specified herein shall conform to or exceed the applicable requirements of the referenced documents to the extent that the requirements therein are not in conflict with the provisions of this Section; provided, that for Building Codes, the latest edition of the codes, as adopted as of the date of award by the agency having jurisdiction, shall apply to the work.
1. ISA-S 5.1- Instrumentation Symbols and Identification.
2. Institute of Electrical and Electronic Engineers (IEEE) 515 - Recommended Practice for Testing, Design, Installation, and Maintenance of Electrical Resistance Heat Tracing for Industrial Applications.
3. IEEE 844 - Recommended Practice for Electrical Impedance, Induction, and Skin Effect Heating of Pipelines and Vessels.
4. National Electrical Code (NEC/NFPA 70)
5. National Fire Protection Association (NFPA)
6. Occupational Safety and Health Act (OSHA)
7. National Electrical Manufacturers Association (NEMA)
8. American National Standards Institute (ANSI)
9. All applicable local codes and standards
10. ASTM 2633 - Standard Test Methods for Thermoplastic Insulations and Jackets for Wire and Cable
11. ASTM B193 - Standard Test Method for Resistivity of Electrical Conductor Materials

1.04 CONTRACTOR SUBMITTALS

A. Shop Drawings: The CONTRACTOR shall submit complete shop drawings of all heat tracing systems, showing the location of thermostats and interphasing with electric power supply.

B. Manufacturer's Data: With the shop drawings, the CONTRACTOR shall also furnish complete manufacturer's data of the electric heating cables and the thermostats.

1.05 QUALITY ASSURANCE

A. After completion and testing of the work, including the pipe insulation, the CONTRACTOR shall remove all debris from the site, clean all parts of the work including controls and other appurtenances, to hand over each system in perfect operating condition.

NO.	DATE
BY	
REVISION	

NO.	DATE
BY	
REVISION	

NO.	DATE
BY	
REVISION	

ACEng
ADAMS & CHRISTENSEN ENGINEERING, INC.
782 WEXFORD CT.
GRAYSLAKE, ILLINOIS 60030
CERTIFICATE OF AUTHORIZATION NO. 05379

GREEN ARROW
2759 LONG ROAD
WOOSTER, OH 44691

THIS DRAWING CONTAINS VALUABLE CONFIDENTIAL AND PROPRIETARY INFORMATION THAT BELONGS TO GREEN ARROW ("GA"), AND IS SUBJECT TO A CONFIDENTIALITY AND NONDISCLOSURE AGREEMENT. GA IS THE AUTHOR AND OWNER OF THIS DRAWING, AND RETAINS ALL COMMON LAW, STATUTORY AND OTHER RIGHTS AND PRIVILEGES WITH RESPECT HERETO, INCLUDING COPYRIGHTS. THE INFORMATION CONTAINED HEREIN MAY NOT AT ANY TIME BE USED FOR ANY UNAUTHORIZED PURPOSE, NOR REPRODUCED BY OR PROVIDED TO ANY THIRD PARTY, WITHOUT THE PRIOR WRITTEN CONSENT OF GA.

©2020, GREEN ARROW.
ALL RIGHTS RESERVED.

GREEN ERA
PIPING SPECS

GREEN ERA
650 W. 83RD ST.
CHICAGO, IL 60620

AREA	CHECKED BY NM
JOB NO. 1512	DRAWN BY BR
SCALE SEE NOTE	DATE 11/16/2021
DWG NO.	
SHEET NO. DP-002	

Green Arrow\02 Projects\1512 Chicago - Feldman - Green Era\07 Drawings\04 Construction\Piping Specs.dwg

PART 2 - PRODUCTS

2.01 GENERAL

A. All pipes, valves, equipment and appurtenances shall be provided with electrical heat tracing where shown; or, where not shown, heat tracing shall be provided in all cases where such items could be endangered by freezing. Such heat tracing shall consist of spiral wrapping with electrical heating cables as recommended by manufacturer and subsequent insulation with fiber glass sections, sealed and weatherproofed as specified in Section 16.3. The heating cables shall be controlled from thermostats installed in representative locations and accessible for adjustment. The heat tracing systems shall be installed complete, including heating elements, power connections, end seals, and controlling thermostats in accordance with the manufacturer's printed installation instructions.

2.02 BASIC MATERIALS

A. 208V Process Temperature Control
1. Heat trace shall be self-regulating and supplied with all equipment and accessories for needed for self-regulating process temperature control.
2. Life Expectancy: 20 years
3. All cables shall be capable of passing 2.5kV dialetic test for one minute (ASTM 2633) after undergoing a 0.5kg-m impact).
4. The heating cable shall consist of two 16 AWG or larger nickel-plated copper bus wires, imbedded in a self-regulating polymeric core that control power output do that the cable has a temperature identification number (T-rating) of T-4 (275°F) without use of thermostats.
5. A ground-fault protection device set at 30 mA, with a nominal 100-ms response time, shall be used to protect each circuit.
6. The heating cable shall have a thinned copper braid with a resistance less than the heating cable bus wire resistance as determined by a type test (ASTM B193, Sec. 5). The braid shall be protected from chemical attack and mechanical abuse by a polylefin or fluoropolymer outer jacket.
7. The self-regulating heating cable shall retain at least 90 percent of its original power output after having cycled 300 times between 50°F and 300°F, allowing at least six minutes of dwell time at each temperature.
8. The heating cable shall be rated for continuous and intermittent exposure capability up to 300°F.
9. Supply electrical voltage will be 200-277 VAC.
10. Cable shall be Raychem or equal.

B. 480V Process Temperature Control
1. MI heating cable shall be magnesium oxide insulated, with copper or alloy conductors and an Incoloy 825 sheath. The heating section of the cable shall be joined to a cold lead also made of Incoloy 825.
2. Each cable shall be factory-terminated to the required length, consisting of the lengths required for the pipe or equipment, plus an allowance for areas of additional heat loss such as valves, flanges, fittings, supports, and the like, plus a reasonable excess to allow for field variations. The cold lead section shall be seven feet long unless otherwise specified.
3. Maximum heating cable sheath temperature, per either the FM or CSA method of calculation, shall be submitted with the bid or design for all Division 1 and Division 2 applications.
4. Each cable shall be shipped with the catalog number marked on the outside of the package, and a permanent metallic cable tag containing the heating cable length, wattage, voltage, and current draw. If the cable has been designed for a hazardous location, the tag shall also indicate the area classification and heat-tracing circuit number.
5. A warranty against manufacturing defects for a period of 10 years shall be available.
6. The heating cable shall be Pyrotenax® brand Alloy 825 MI, mineral insulated heating cable with a maximum application temperature for the heating units of 1022°F (550°C) and a maximum exposure temperature for the heating cable of 1200°F (650°C), as manufactured by Tyco Thermal Controls.
7. Supply electrical voltage will be 480VAC.
9. Cable shall be Pyrotenax or equal.

C. Freeze Protection and Plastic Piping
1. Heat trace shall be self-regulating and supplied with all equipment and accessories for needed for self-regulating temperature control.
2. Life Expectancy: 20 years
3. All cables shall be capable of passing 2.5kV dialetic test for one minute (ASTM 2633) after undergoing a 0.5kg-m impact).
4. The heating cable shall consist of two 16 AWG or larger nickel-plated copper bus wires, imbedded in a self-regulating polymeric core that control power output do that the cable has a temperature identification number (T-rating) of T-6 (185°F) without use of thermostats.
5. A ground-fault protection device set at 30 mA, with a nominal 100-ms response time, shall be used to protect each circuit.
6. The heating cable shall have a thinned copper braid with a resistance less than the heating cable bus wire resistance as determined by a type test (ASTM B193, Sec. 5). The braid shall be protected from chemical attack and mechanical abuse by a polylefin or fluoropolymer outer jacket.
7. The self-regulating heating cable shall retain at least 90 percent of its original power output after having cycled 300 times between 50°F and 300°F, allowing at least six minutes of dwell time at each temperature.
8. Cable shall be Raychem or equal.

D. Heat Trace Tubing
1. Low temperature self regulating tubing bundle containing process tube, self-regulating heating element, heat reflecting foil wrap, moisture-resistant insulation, and protective jacket.
2. See Section 16.4 for additional requirements.

E. Control Systems
1. Local Controllers
   a. General
      1) Service: Non-hazardous
      2) Supply Voltage: 208 VAC
   b. Enclosure: NEMA 4X, FRP enclosure
   c. Control Range: -76°F to 1058°F
   e. Control Sensing: Process
   d. Thermostat shall be Raychem DigiTrace 910 Series or equal.
2. Centralized Controllers
   a. General
      1) Service: Non-hazardous
      2) Supply Voltage: 208 VAC or 277 VAC
   b. Enclosure: NEMA 4X, FRP enclosure
   c. Control Range: -76°F to 1058°F
   e. Control Sensing: Process
   d. Thermostat shall be Raychem DigiTrace 920 Series or equal.

F. Heat trace and all accessories to be installed in accordance with the manufacturer's requirements and specifications,

G. Temperature Requirements:
3. Able to maintain pipe content temperature greater than 40°F at temperatures air temperatures down to -20°F.

PART 3 -- EXECUTION

3.01 INSTALLATION

A. General: The CONTRACTOR shall assemble and install all equipment specified herein, in strict accordance with the manufacturer's published instructions, under the supervision of the manufacturer's representative, under the general review of the Owner. All installations shall be accomplished by competent craftsmen in a workmanlike manner. All heating strips shall be cut in the field and wrapped on the pipelines as required.

B. Contractor Coordination: The CONTRACTOR shall coordinate the installation with the electrical work, to ascertain the correct location of all electrical connection locations.

3.02 TESTING

A. The contractor is responsible for conducting testing per the manufacturer's requirements and providing complete documentation to the Owner.

B. Factory inspections and tests for self-regulating, power limiting, series constant wattage and constant wattage (MI) heater cables shall include but are not limited to the following:
1. Testing shall be done per the latest IEEE Std. 515 test section and applicable manufacturer's standards.
2. In the field, all heater cables shall be meggered. The following separate field megger readings shall be taken on each self-regulating and each M.I. heater cable:
   d. Heater cable shall be meggered when received at jobsite before installation.
   e. Heater cable shall be meggered after installation, but before insulation is applied.
   f. Heater cable shall be meggered after insulation has been installed.
3. All three of the above field megger readings shall be greater than 20 megohms. Otherwise, the heater cable is not acceptable and shall be replaced.
4. Field megger tests shall be recorded for each heater cable, and certified reports shall be submitted to the Owner.

END OF SECTION 16.2

SECTION 16.3
SPECIFICATIONS FOR
PIPE INSULATION AND CLADDING

PART 1 - GENERAL

1.01 SUMMARY

A. This Section includes labor, materials and equipment necessary to complete the thermal and insulation for piping shown in the Contract Documents.

1.02 QUALITY ASSURANCE

A. Installation shall be by skilled workers regularly engaged in this type of work with successful experience in installations similar in size and type to the requirements of this Project.

B. Installation shall be in accordance with National Commercial & Industrial Insulation Standards, published by Midwest Insulation Contractors Association (MICA).

C. Insulation materials must be manufactured at facilities certified and registered with an approved registrar to conform to ISO 9000 Quality Standard.

1.03 SUBMITTALS

A. Manufacturers Literature: Materials description and application instructions.

1.04 DELIVERY, STORAGE AND HANDLING

A. Deliver materials to the site in manufacturer's unopened cartons or packages, bearing a label clearly indicating that flame and smoke ratings do not exceed specified requirements.

1.05 RELATED WORK SPECIFIED ELSEWHERE

A. The work of the following Division or Sections applies to the work of this Section. Other Sections of the Specifications, not referenced below, shall also apply to the extent required for proper performance of this WORK.

1. Section 16.2 - Electrical Pipe Heat Tracing

PART 2 - PRODUCTS

2.01 GENERAL

A. Insulation shall carry the following composite (insulation, jacket or facing, and adhesive used to adhere the facing or jacket to the insulation) fire and smoke hazard ratings (unless specifically excluded) tested in accordance with ASTM E84, NFPA 255 and UL 723.
1. Flame Spread: 25 or less
2. Smoke Developed: 50 or less

B. Accessories, such as adhesives, mastics, cements, tapes, glass fabric and cloth for fittings shall have the same component ratings as specified above.

C. Insulation products as manufactured by Manville, Owens-Corning, Certain Teed, Knauf, or Armstrong.

2.02 PIPE INSULATION

A. Glass fiber insulation with average thermal conductivity not exceeding .23 BTU-in. per sq. ft. per degree Fahrenheit per hour at mean temperature of 75° F, and rated at 500° F, "Micro-Loc" (Manville Corp.); or acceptable substitute. Type AP all-purpose jacket. Insulation shall comply with ASTM G547.

B. All-service vapor barrier jacket.
1. Reinforced white kraft bonded to aluminum foil.
2. Factory-applied double pressure-sensitive adhesive system with matching pressure-sensitive butt strips.

C. Exterior piping: Protect pipe insulation with 0.016-inch smooth or corrugated aluminum jacketing with factory-applied galvanic action barrier and 3/4-inch wide bands.

D. Minimum thickness:
1. Pipe sizes 2-inch and smaller: 1-inch.
2. Pipe sizes 2-1/2 inch to 8-inch: 1-1/2 inches.
3. Pipe sizes 10-inch and larger: 2 inches.

E. Piping to be pressure tested prior to installation of heat trace and insulation.

F. Provide saddle spreaders between jacketed pipe insulation and pipe supports.

PART 3- EXECUTION

3.01 GENERAL

A. Install insulation continuous through wall, floor and ceiling openings, and through wall sleeves.

B. Insulation shall be applied on clean, dry surfaces.

C. Insulation on cold surfaces where a vapor barrier is used shall extend full size through hangers and shall be protected at the hanger point by the use of inserts and saddles.

D. All exposed insulated pipe, fittings and accessories within 8'-0" of finished floor shall be protected with an aluminum jacket.

3.02 JACKETING

A. Aluminum: Protect pipe insulation with 0.016-inch smooth or corrugated aluminum jacketing with factory-applied galvanic action barrier and 3/4-inch wide bands.

B. PVC: One piece molded-type fitting covers and sheet material. Off-white color. Thickness of 15 mil with brush on welding adhesive connection and a maximum vapor permeability of 0.002 per inch per ASTM E96.

3.03 INSERTS AND SADDLES (SHIELDS)

A. Install inserts at hangers supporting insulated pipe. Extend vapor barrier over the insert and seal at insulation vapor barrier.

B. Locate saddles beneath each insert, centered on the hanger.

END OF SECTION 16.3

SECTION 16.4
SPECIFICATIONS FOR
PIPING AN FITTINGS

PART 1 - GENERAL

1.01 SECTION INCLUDES

A. Procurement and installation of piping and fittings.

1.02 RELATED SECTIONS

A. Section 16.2 Electrical Pipe Heat Tracing

B. Section 16.3 Pipe Insulation and Cladding

1.03 DEVIATIONS FROM THESE SPECIFICATIONS

A. No deviations from these specifications will be allowed unless approved by Owner in writing prior to bid closing. All equipment and equipment functions must be built and designed to these specifications.

1.04 GENERAL METHODS FOR PIPING INSTALLATION

A. Pipes shall be round and straight. Cutting shall be done with proper tools and pipes shall be reamed to full size after cutting.

B. Piping shall be properly enclosed, supported, anchored, sway braced, connected, tested, cleaned and flushed out and shall be properly insulated and protected where required.

C. Pipes shall be run with proper grade to provide for easy draining, in group runs where applicable, and in a neat an orderly manner to the satisfaction of Owner.

D. Pipe runs shall be carefully laid out to provide maximum utilization of space.

E. Piping shall be installed with ample provisions for expansion and contraction. Such provisions shall be mad by means of piping offsets, changes in direction, expansion loops, and expansion joints. Expansion joints shall not be used in lieu of offsets, changes in direction, or loops, except where specified in the Drawings or approved by Owner.

F. Horizontal runouts from mains and/or risers shall be made with swing joints and shall be sufficient length to absorb vertical expansion and/or contraction of risers and horizontal expansion or contraction of mains.

G. Connections to apparatus and equipment shall be with flanges, unions, etc., for easy removal.

H. Install manual drain valves at every low point of water piping systems and a manual air vent at every high point of water piping. Drain valves attached to piping sized 4" and larger shall be 2" size and match the material of the piping.

I. Changes in piping shall be made with reducing elbows, reducing tees or increasers. Increasers may be concentric. Reducers shall be eccentric and flat on top for water.

J. Cap or cover all open piping during erection to prevent entry of foreign material.

K. All piping connections shall be welded connections unless specifically approved by Owner or to connect to instruments, equipment, or tanks with flange connections.

PART 2 - PRODUCTS

2.01 PRODUCTS

A. PVC Pipe
1. Schedule: See Drawings
2. Conform to grade 1, gray, ASTM D1784, ASTM D1785, ASTM D3915, and ASTM D2513 (gas pressure pipe only).
3. Fittings:
   a. Socket end/fittings: Conform to ASTM D2466, ASTM D2467, ASTM D3915, and ASTM F1970.
   b. Threaded end/fittings: Conform to ASTM D2464 and ASTM B1.20.1.
   c. Flanges: Van stone
   d. Fittings shall be same grade as and class as pipe.
4. Solvent cement for joining PVC piping: ASTM D2564. include primer according to ASTM F656.

B. Carbon Steel Pipe
1. Schedule: See drawings
2. Conform to ASTM A106, Grade B
3. Pipes with underground exposure/buried shall have corrosion protection as identified in "buried pipe installation".
4. Welding
   a. Welding to be done in accordance with ASME code for pressure piping by competent welding equipment operators.
   b. Furnish proof of competency for each welder by submitting a previously issued ASME welding certificate of authorization to Owner's representative, if requested. Specific certification for this project is not required.
   c. Welding to be by oxyacetylene or electric arc method. Welding neck flanges to be provided at flanged valves and at equipment.
5. Fittings 2" pipe and smaller: join seamless or welded piping:
   a. Threaded: Comply with ANSI B1.20.1 and with rector seal pipe joint compound on male threads only.
   b. Fittings and flanges to comply with ASTM A105.
   c. Fittings to be 3,000 lb.
6. Fittings 2 ½" pipe and larger unless specifically noted:
   a. Welded: Butt welded
   b. Fittings to conform the ASTM A234.
   c. Flanges to conform to ASTM A105.
   d. Schedule to match piping.

NO.	DATE
BY	
REVISION	
NO.	DATE
BY	
REVISION	
NO.	DATE
BY	
REVISION	

ACEng
ADAMS & CHRISTENSEN ENGINEERING, INC.
782 WEXFORD CT.
GRAYSLAKE, ILLINOIS 60030
CERTIFICATE OF AUTHORIZATION NO. 05379

GREEN ARROW
2759 LONG ROAD
WOOSTER, OH 44691

THIS DRAWING CONTAINS VALUABLE CONFIDENTIAL AND PROPRIETARY INFORMATION THAT BELONGS TO GREEN ARROW ("GA"), AND IS SUBJECT TO A CONFIDENTIALITY AND NONDISCLOSURE AGREEMENT. GA IS THE AUTHOR AND OWNER OF ALL RIGHTS IN THE WORK UNDER THE COMMON LAW, STATUTORY AND OTHER RIGHTS AND PRIVILEGES WITH RESPECT HERETO, INCLUDING COPYRIGHTS. THE INFORMATION CONTAINED HEREIN MAY NOT, AT ANY TIME BE USED FOR ANY UNAUTHORIZED PURPOSE, NOR REPRODUCED OR PROVIDED TO ANY THIRD PARTY WITHOUT THE PRIOR WRITTEN CONSENT OF GA.

©2020, GREEN ARROW.
ALL RIGHTS RESERVED.

GREEN ERA
PIPING SPECS

GREEN ERA
650 W. 83RD ST.
CHICAGO, IL 60620

AREA	CHECKED BY
	NM
JOB NO.	DRAWN BY
1512	BR
SCALE	DATE
SEE NOTE	11/16/2021
DWG NO.	
SHEET NO.	
DP-003	

Green Arrow\22 Projects\1512 Chicago - Feldman - Green Era\07 Drawings\04 Construction\Piping Specs.dwg

C. 304 Stainless Steel Pipe
1. Schedule: See drawings
2. Conform to ASTM A312 Type 304L
3. Welding
a. Welding to be done in accordance with ASME code for pressure piping by competent welding equipment operators.
b. Furnish proof of competency for each welder by submitting a previously issued ASME welding certificate of authorization to owner's representative, if requested. Specific certification for this project is not required.
c. Welding to be by oxyacetylene or electric arc method. Welding neck flanges to be provided at flanged valves and at equipment.
4. Fittings 2" pipe and smaller: Join seamless or welded piping:
a. Socket welded unless connecting to a threaded item.
b. Threaded: comply with ANSI B1.20.1 and with rector seal pipe joint compound on male threads only.
c. Conform to ASTM A182-F304l (forged)
d. Flanges: Class 150
e. Fittings to be 3,000 lb.
5. Fittings 2 ½" pipe and larger unless specifically noted:
a. Welded: butt welded
b. Confirm to ASTM A403 Grade WP304
c. Flanges to conform to ASTM A182-f304l, Class 150
d. Schedule to match piping.

D. HDPE pipe
1. SDR: See drawings
2. Classified as Type III, Class C, Category 5, Grade P34, Cell Classification PE 345434C, HDPE black pipe.
3. Conforming to v d3261, and d3350
4. HDPE piping shall conform to ASTM d 3350. the joints shall be butt fusion welded, flanged or flush threaded as shown on the drawings.
5. Fittings
a. All HDPE pipe fittings, as specified in the contract document, shall be classified as solid, Type III, grade PE 3408 HDPE fittings.
b. Pipe and fittings shall be joined using fusion thermal welding, flanges, or flush threaded connections, except as specified in the drawings.

E. Ductile Iron Pipe (DIP)
1. DIP for gravity sewer service to comply with ASTM A746.
2. DIP for pressure service to comply with ASTM A377.
3. All DIP to conform to ANSI/AWWA C151/A21.50
4. Conform to AWWA C104, if cement-lined
5. Pressure Class: 150 Nominal
6. Fittings:
a. Conform to ANSI A21.11 and AWWA C111.
b. Fittings shall be ductile iron.
c. Flanges shall be ductile iron, solid pattern, high-hub design
7. Flanges: Suitable for 150 psi operating conditions. 250 psi maximum pressure rating.

F. Black Iron Pipe (BIP)
1. Schedule: See Drawings
2. Conform to ASTM A53, Type S, Grade A
3. Fittings
a. Materials: Conform to ASTM A197
b. Dimensions: Conform to ASME B16.3, B16.14, and B16.39 (Unions)
c. Threads: Conform the ASME B1.20.1
d. Class: 150
4. Flanges: To be ASME/ANSI B16.1 Class 150

G. Grooved Piping Products
1. General: As Installer's option, mechanical grooved pipe couplings and fittings may be used for water piping systems having operating conditions not exceeding 230 deg F (110 deg C), excluding steam piping and any other service not recommended by manufacturer, in lieu of welded, flanged, or threaded methods, and may also be used as unions, seismic joints, flexible connections, expansion joints, expansion compensators, or vibration reducers.

2. Coupling Housings: Ductile iron conforming to ASTM A 536.

3. Coupling Housings Description: Grooved mechanical type, which engages grooved or shouldered pipe ends, encasing an elastomeric gasket which bridges pipe ends to create seal. Cast in two or more parts, secure together during assembly with nuts and bolts. Permit degree of contraction and expansion as specified in manufacturer's latest published literature.

4. Gaskets: Mechanical grooved coupling design, pressure responsive so that internal pressure serves to increase seal's tightness, constructed of elastomers having properties as designated by ASTM D 2000.
a. Water Services:
1. EPDM Grade E, with green color code identification.
b. Other Services: As recommended by Manufacturer.

5. Bolts and Nuts: Heat-treated carbon steel, ASTM A 449 and A 183, minimum tensile ll0,000 psi.

6. Couplings:
a. Steel Piping: Couplings shall consist of two housings.
1. Rigid: Coupling housings with offsetting, angle-pattern bolt pads shall be used to provide system rigidity and support and hanging in accordance with ANSI B3l.1 and B31.9. Installation-Ready, for direct stab installation without field disassembly. Basis of Design: Victaulic Style 107N.
2. Flexible: Use in locations where vibration attenuation and stress relief are required. Flexible couplings may be used in lieu of flexible connectors at equipment connections. Three couplings, for each connector, shall be placed in close proximity to the vibration source. Basis of Design: Victaulic Style 177 Installation-Ready, and Style 77.
3. AGS series two-segment couplings with lead-in chamfer on housing key and wide-width FlushSeal gasket. Basis of Design: Victaulic Style W07 (rigid) and Style W77 (flexible).
b. Stainless Steel Piping: Ductile iron (ASTM A 536) or stainless steel (ASTM A 351) housings:
1. Rigid: Coupling housings shall engage the bottom of the groove. Victaulic Style 89 and W89 (ductile iron) or Style 489 (stainless steel).
2. Flexible: Victaulic Style 77S.
3. Schedule 5S and IOS pipe shall be grooved using a Victaulic grooving tool equipped with RX roll sets, specifically designed for stainless steel pipe. 2" and down shall be Vic-Press.
c. Ductile Iron Piping: Victaulic Style 31.
d. Copper Tubing: Copper tube dimensioned, installation-ready type. Victaulic Style 607.

7. Branch Stub-Ins: Upper housing with full locating collar for rigid positioning engaging machine-cut hole in pipe, encasing elastomeric gasket conforming to pipe outside diameter around hole, and lower housing with positioning lugs, secured together during assembly with nuts and bolts.

8. Fittings: Grooved or shouldered end design to accept grooved mechanical couplings.
a. Ductile Iron: ASTM A 536.
b. Fabricated Fabricated Steel: ASTM A 53, Type F for 3/4" to 1-1/2"; Type E or S, Grade B for 2" to 20".
c. Stainless Steel: ASTMA 403 or factory-fabricated fromASTM A312 stainless steel pipe.
d. Copper-Tubing: ASME B16.22 wrought copper or ASME B16.18 cast bronze.

9. Flanges: Conform to Class 125 cast iron and Class 150 steel bolt hole alignment.
a. Ductile Iron: ASTM A 536.
b. Stainless Steel: ASTM A 351.

10. Grooves: Conform to the following:
a. Standard Steel: Square cut.
b. Lightweight Steel: Roll grooved.
c. Ductile Iron: Radius cut grooved, AWWA C606.
d. Stainless Steel: Victaulic RX grooved ends.
e. Copper-Tubing: Copper tube dimensioned. Flaring the adjoining pipe or fitting ends to accommodate alternate sized couplings is not permitted.

11. Manufacturer: Subject to compliance with requirements, provide grooved piping products of one of the following:
a. Victaulic Co. of America.
b. Anvil Gruvlok (ASC Engineered Solutions).
c. Argco Rubber and Gasket Co., Inc.
d. Or engineer approved equal.

H. Gaskets
1. Flat Gaskets: Full face rubber gaskets one-eight (1/8) inch thick shall be used in all flanged joints. Gasket material shall be (red rubber) styrene-butadiene rubber (SBR) unless otherwise specified.
2. O-ring type gaskets for mechanical joints shall be made from Ethylene Propylene Diene Monomer (EPDM) elastomer unless otherwise specified.

I. Flexible Water Hose
1. Tube/Interior: Polyethylene
2. Cover: EPDM
3. Type: Non-collapsible
4. Connections: Stainless Steel
5. Working Pressure: Up to 100 psi.

J. Flexible Connectors - Steel, Threaded
1. Type: Corrugated metal hose with braid
2. Material: 304/316 Stainless Steel
3. Braids: Double
4. Pressure Rating: 220 psig maximum working pressure and 70°F maximum operating temperature
5. Process Connections: NPT x Coupling
6. Accessories: Provided with liners, covers, control rods, limit stops, and/or intermediate anchor base as required.
7. Installation: Install per manufacturer's instructions and requirements. Guiding and anchoring per EJMA recommendations and guidelines.

K. Flexible Connectors - Steel, Flanged
1. Type: Corrugated metal hose with braid
2. Material: 304/316 Stainless Steel
3. Braids: Double
4. Pressure Rating: 220 psig maximum working pressure and 70°F maximum operating temperature.
5. Process Connections: ANSI Class 150/300 fixed or floating flanges
6. Accessories: Provided with liners, covers, control rods, limit stops, and/or intermediate anchor base as required.
7. Installation: Install per manufacturer's instructions and requirements. Guiding and anchoring per EJMA recommendations and guidelines.

L. Flexible Connectors - Rubber
1. Flexible connectors/expansion joints shall be of the molded spherical type with integral cable restraints. EPDM and nylon construction with internal steel wire, molded within the raised face ends, for added strength. Pressure rated for 225 psi at 220°F, with a minimum 4 to 1 safety factor. Flanges shall be one-piece, free-floating, class 150 galvanized plate steel type with permanently affixed control cables to prevent over-extension. Control cables shall be of the galvanized aircraft type, and be an integral part of the joint requiring no field adjustment.
2. Installation: Install per manufacturer's instructions and requirements.

M. Pipe Fasteners
1. TYPE 304 STAINLESS STEEL
a. Studs/bolts: ASTM A193-B8 Class 1, UNC. A320-B8 Class 1, UNC allowed for pipe pressures less than 150 psig.
b. Hex Nuts: Double ASTM a194-8, 18-8, UNC
c. SAE Flat Washers: 18-8
d. Split Ring Lock Washers: 18-8

N. Pipe Sleeves
1. Concrete; Watertight - Standard weight steel sleeve with continuous welded 2-inch water color. Seals shall be Link-Seal or equal. Penetrations may be core drilled in-lieu of sleeving.
2. Cast-in-Place Concrete; Non-Watertight - Standard weight steel sleeve with Oakum or caulk seal.
3. Floor Sleeves in Exposed Areas - schedule 40 galvanized steel pipe sleeve

O. Pipe Hangers, Anchors, and Supports
1. Provide concrete inserts, clamps, pipe hangers, anchors and equipment supports required to rigidly support the systems and equipment installed. Hanger design shall permit vertical adjustment and lateral movement to allow pipe expansion.
2. Horizontal Piping Hangers and Supports. Unless otherwise indicated and except as specified else were, install the following types:
a. Adjustable Steel Clevis Hangers (MSS Type 1): For suspension of stationary pipes NPS ½" to NPS 30".
b. U-Bolts (MSS Type 24) for support of heavy pipe NPS ½" to NPS 30".
c. Pipe Hangers (MSS Type 5): For suspension of pipes NPS ½" to 4" to allow off-center closure for hanger installation before pipe erection.
3. Vertical Piping Clamps. Unless otherwise indicated and except as specified else were, install the following types:
a. Extension Pipe or Riser Clamps (MSS Type 8): For support of pipe risers NPS ¾" to NPD 20".
b. Carbon- or Alloy-Steel Riser Clamps (MSS Type 42): For support of pipe risers NPS ¾" to NPD 20" if longer ends are required for riser clamps.
4. Saddles for 4" and larger piping shall be fabricated of 14 gauge galvanized iron and for smaller piping shall be fabricated of 16 gauge galvanized iron. Saddles shall encompass one half of the diameter of the covering.

2.02 PIPE IDENTIFICATION

M. Pipe Markers
1. Shall identify conveyed liquid and direction of flow.
2. Shall be adhesive-type, generated by an industrial label maker. Brady or equal.
5. Markers shall conform to ANSI A13.1 and OSHA requirements for marker size, marker color, legend size, and legend color.

B. Placement
1. Each pipe shall be labeled with a minimum of two (2) markers per room.
2. Markers shall be installed on all branch lines of all header pipes.
3. Markers shall be installed on all header lines between branches.
4. Where the same pipe goes through a wall or piece of equipment, markers shall be placed on each side.

PART 3 - EXECUTION

3.01 GENERAL

A. The Contract Documents are diagrammatic and are a graphic representation of requirements intended to convey the scope of work and to indicate the fixtures and other included work. Duct and pipe rerouting and duct size changes are to be added at no additional cost to Owner.

B. Locations of items not definitely fixed by dimensions are approximate only and exact locations necessary to secure the best conditions and results shall be determined at the site and be subject to review.

C. Follow Contract Documents in laying out work, check work or other trades to verify spaces in which work will be installed and maintain maximum headroom and space conditions at all points.

D. Where ever two or more pipes are to be installed in parallel, or parallel to the piping of other trades, the piping shall be installed with sufficient space between pipes to allow for the proper application of pipe covering, painting and servicing.

E. Furnish advance information on locations and size of frames, boxes, sleeves and openings needed for the work, and also furnish information of other work with out delay.

F. Where there is evidence that parts of the piping work in will interfere with other work and/or the structure, assist in working out space conditions and make necessary adjustments to accommodate the work.

G. Work installed before coordinating with other trades which causes interference with other work shall be changed to correct such condition without additional cost to Owner. This shall apply to shop fabricated work as well as work fabricated in place.

H. Products, appliances and equipment are to be installed and connected using standard industry practices and in accordance with the manufacturer's instructions.

3.02 GENERAL METHODS FOR PIPING INSTALLATION

A. Pipes shall be round and straight. Cutting shall be done with proper tools and pipes shall be reamed to full size after cutting.

B. Piping shall be properly enclosed, supported, guided, anchored, sway braced, connected, tested, cleaned and flushed out, and shall be properly insulated and protected where required.

C. Pipes shall be run with proper grade to provide for easy draining, in group runs where applicable, and in a neat and orderly manner to the satisfaction of Owner.

D. Pipe runs shall be carefully laid out to provide maximum utilization of space.

E. Size shown in the Contract Documents are nominal pipe sizes and not outside diameters.

F. Pipes shall be run substantially as indicated in the Drawings.

G. Piping shall be installed with ample provisions for expansion and contraction. Such provisions shall be made by means of piping off sets, changes indirection, expansion loops, and expansion joints. Expansion joints shall not be used in lieu of off sets, changes in direction or loops, except where specified or indicated in the Drawings or where otherwise obviously necessary.

H. Horizontal run outs from mains and/or risers shall be made with swing joints and shall be of sufficient length to absorb vertical expansion and/or contraction of risers and horizontal expansion or contraction of mains.

I. Connections to apparatus and equipment shall be with flanges, unions, etc., for easy removal.

K. Install manual drain valves at every low point of water piping systems and a manual air vent at every highpoint of water piping systems. Drain valves attached to piping sizes 4" and larger shall be 2" size. Exact location of drain valves to be verified and approved by Owner.

L. Changes in pipe shall be made with reducing elbows, reducing tees or increasers. Increasers may be concentric. Reducers shall be eccentric; flat on top for water, flat on bottom for compressed air.

M. Piping up to 2" inclusive shall be reamed after cutting.

N. Piping shall be cleaned internally immediately prior to installation in to the pipeline.

P. Cap or cover all open piping during erection to prevent entry of foreign material.

Q. Installation procedures for buried pipe are detailed in Section 16.1.

3.03 EXISTING UTILITIES, PIPING, AND STRUCTURES

A. Existing Utilities:
1. Existing structures, utilities, and piping are shown on the Drawings only by general location. The Owner does not guarantee the locations as shown on the Drawings, and the Contractor shall be solely responsible for verifying the exact location of each of these utilities, without additional compensation.
2. The Contractor shall have sole responsibility for providing temporary support and for protecting and maintaining all existing utilities, piping, and structures in the project area during the entire period of construction, including but not limited to the period of excavation, installation, backfill and compaction. In carrying out this responsibility, the Contractor shall exercise particular care, whenever gas mains or other utility lines are crossed, to provide compacted backfill or other stable support for such lines to prevent any detrimental displacement, rupture or other failure.

B. Deviations Occasioned by Other Utilities, Pipe, and Structures:
1. Wherever existing utilities, pipe, or structures present obstructions to the grade and alignment of the pipe, they shall be permanently supported, removed, relocated or reconstructed by the Contractor through cooperation with the Owner of the utility. In those instances where their relocation or reconstruction is impracticable, a deviation from the grade will be ordered and the change shall be made in the manner directed with extra compensation allowed therefore at unit prices, if applicable.
2. No deviation shall be made from the required line or grade except with the written consent of the Owner.

3.04 PIPE AND PIPE FITTINGS

A. See Section 16.4.2.01.

3.04 PIPE SPECIALTIES

A. Unions
1. Use the same material and finish as the pipe system.
2. Use dielectric unions or flanges in water lines where copper or brass piping is connected to ferrous pipe or equipment.
3. Unions or flange unions shall not be used in straight runs or pipe or in concealed locations except for flanged valve applications.

NO.	DATE
BY	
REVISION	
NO.	DATE
BY	
REVISION	
NO.	DATE
BY	
REVISION	

ACEng
ADAMS & CHRISTENSEN ENGINEERING, INC.
782 WEXFORD CT.
GRAYSLAKE, ILLINOIS 60030
CERTIFICATE OF AUTHORIZATION NO. 05379

GREEN ARROW
2759 LONG ROAD
WOOSTER, OH 44691

THIS DRAWING CONTAINS VALUABLE CONFIDENTIAL AND PROPRIETARY INFORMATION THAT BELONGS TO GREEN ARROW ("GA"), AND IS SUBJECT TO A CONFIDENTIALITY AND NONDISCLOSURE AGREEMENT. GA RETAINS ALL RIGHTS IN AND TO THIS DRAWING, AND RETAINS ALL COMMON LAW, STATUTORY AND OTHER RIGHTS AND PRIVILEGES WITH RESPECT HERETO, INCLUDING COPYRIGHTS. THE INFORMATION CONTAINED HEREIN MAY NOT BE USED FOR ANY PURPOSE NOT EXPRESSLY AUTHORIZED BY GA IN WRITING, NOR FOR ANY UNAUTHORIZED PURPOSE, NOR REPRODUCED BY OR PROVIDED TO ANY THIRD PARTY, WITHOUT THE PRIOR WRITTEN CONSENT OF GA.

©2020, GREEN ARROW.
ALL RIGHTS RESERVED.

GREEN ERA
PIPING SPECS

GREEN ERA
650 W. 83RD ST.
CHICAGO, IL 60620

AREA	CHECKED BY
	NM
JOB NO.	DRAWN BY
1512	BR
SCALE	DATE
SEE NOTE	11/16/2021
DWG NO.	
SHEET NO.	
DP-004	

Green Arrow\02 Projects\1512 Chicago - Feldman - Green Era\07 Drawings\04 Construction\Piping Specs.dwg

3.05 PIPE HANGERS, SUPPORTS, AND ANCHORS

A. All hangers shall be attached to structural members.

B. Piping shall be supported as follows:
1. Horizontal Steel Piping:

Pipe Size	Steel Pipe					
	Max. Spacing (Liquid)	Max. Spacing (Gas)	Max. Dist. To Fittings	Max Dist To Direction Change	Min. Rod Size	Saddle Length
< 1 1/4"	7'	9'	2'	1'	3/8"	12"
1 1/2"	9'	12'	2'	1'	3/8"	12"
2"	10'	13'	2'	1'	3/8"	12"
2 1/2"	11'	13'	2'	1'	1/2"	12"
3"	12'	15'	3'	1'	1/2"	12"
3 1/2"	13'	15'	3'	1'	1/2"	12"
4"	14'	17'	3'	1'	5/8"	12"
5"	16'	17'	3'	1'	5/8"	12"
6"	17'	21'	3'	1'	3/4"	12"
8"	19'	24'	3'	1'	7/8"	16"
10"	20'	25'	3'	1'	7/8"	16"
12"	23'	30'	3'	1'	7/8"	16'
14"	25'	32'	3'	1'	1"	20"
16"	27'	35'	3'	1'	1"	20"
18"	28'	37'	3'	1'	1"	20"
20"	30'	39'	3'	1'	1-1/4"	20"
24"	32'	42'	3'	1'	1-1/4"	20"

2. Horizontal ABS or PVC Piping:

Pipe Size	PVC Pipe Schedule 80			
	Max. Spacing @ 100°F	Max. Spacing @ 140°F	Max. Dist. to Fittings	Max Dist to Direction Change
< ½"	4'	3'	0.5'	0.5'
½"	4.25'	3.5'	0.5'	0.5'
1"	4.5'	3.75'	0.5'	0.5'
1-1/4"	4.75'	4.25'	1'	1'
1-1/2"	5.25'	4.75'	1'	1'
2"	5.5'	5'	2'	2'
3"	7'	5.5'	2'	2'
4"	7.25'	5.75'	2'	2'
6"	8.5'	6.5'	2'	2'
8"	9.75'	7'	2'	2'
10"	10.25'	7.75'	2'	2'
12"	11.5'	8.75'	2'	2'

Pipe Size	PVC Pipe Schedule 40			
	Max. Spacing @ 100°F	Max. Spacing @ 140°F	Max. Dist. to Fittings	Max Dist to Direction Change
< ½"	3.5'	2.5'	0.5'	0.5'
½"	4'	3'	0.5'	0.5'
1"	4.5'	3.25'	0.5'	0.5'
1-1/4"	4.75'	3.5'	1'	1'
1-1/2"	5'	3.75'	1'	1'
2"	5'	4'	2'	2'
3"	6.25'	4.5'	2'	2'
4"	6.75'	4.75'	2'	2'
6"	7.75'	5.25'	2'	2'
8"	8.5'	6'	2'	2'
10"	9'	6.75'	2'	2'
12"	9.75'	7.25'	2'	2'

C. Regardless of any of the above listed hanger spacings, provide a hanger not more than 12" from each change indirection of piping and at each drop and riser.

D. Hangers supporting cast iron soil pipe for the hub and spigot type in 5'0" lengths shall be located at the pipe hub connections.

E. In no case will any pipe be installed where it is supported on or suspended from another pipe, conduit or duct.

F. Hangers on insulated pipe shall be large enough to en compass the insulation and metal saddle for same.

G. Saddles for 4" and larger piping shall be fabricated of 14 gauge galvanized iron and for smaller piping shall be fabricated of 16 gauge galvanized iron. Saddles shall encompass one half of the diameter of the covering and lengths shall be as follows:

Pipe Size	Saddle Length
Up to 6"	12"
8"–12"	16"
Over12"	20"

3.6. PIPE SLEEVES

A. Fabricate sleeves from new material, with ends cut square. Install sleeves 1 1/2" larger than O.D. of pipe or pipe insulation, where insulated. Caulk annular space between pipe and sleeve with a waterproof caulking material,
1. Exterior Wall Sleeves: Install sleeve reamed with welded flanged ends flush with wall.
2. Floor Sleeves: Install sleeves reamed with the top of the sleeve 4" above the floor in equipment rooms and wet areas and 1/4" above the floor in all other locations.
3. Masonry Wall Sleeves (Interior): Install sleeves reamed and finished flush with wall.
4. Gypsum Wall Sleeve & Sleeves Through Existing Construction: Terminate ends flush with wall.

B. Sleeves shall be set and maintained in place during the progress of the work.

3.07 PIPE COATINGS (FERROUS PIPING ONLY)

A. Non_submerged/aboveground
1. Bare/uninsulated (operating temperature <170°F):
   a. Surface Preparation SSPC_SP2 and 3
   b. First Coat: Epoxy Mastic 5 mil DFT
   c. Second Coat: Urethane 2 mil DFT
2. Insulated (operating temperature <170°F):
   a. Surface Preparation SSPC_SP2 and 3
   b. First Coat: Epoxy Mastic 5 mil DFT
3. High Temperature, Insulated (operating temperature >=170°F):
   a. Surface Preparation SSPC_SP10
   b. First coat: inorganic zinc silicate primer 2-3 mil DFT
4. High Temperature, Uninsulated (operating temperature >=170°F):
   a. Surface Preparation SSPC_SP10
   b. First Coat: Inorganic Zinc Silicate Primer 2-3 mil DFT
   c. Second Coat: High Solids Epoxy 4-8 mil DFT

B. Submerged or Buried:
1. Operating Temperature <170°F:
   a. Surface Preparation SSPC_SP10
   b. First Coat: Coal Tar Epoxy, 8 mil DFT
   c. Second Coat: Coal Tar Epoxy, 8 mil DFT
2. Operating Temperature >=170°F:
   a. Surface Preparation SSPC_SP10
   b. First Coat: Inorganic Zinc Silicate Primer 2-3 mil DFT
   c. Second Coat: High Solids Epoxy (Untinted) 4-8 mil DFT

3.08 VALVES

A. Valves shall be installed a head of control valves and at all mechanical apparatus and fixtures to permit maintenance of the same without shutting down the service of the piping systems. Provide main shut off valve at domestic water service entry to building. Valve each domestic water branch at the main except at plumbing fixtures having integral stops. Provide drain valves at low points of piping.

B. Install valves with stems extending above the horizontal position.

C. Install gate valves with the stem in the vertical position.

D. Install each valve to be easily accessible for operation, visual inspection and preventive maintenance.

E. Provide valves where indicated in the Contract Documents and where necessary for proper control of piping and equipment.

3.09 CHASES, SLEEVES, AND WALL OPENINGS

A. The placing of sleeves in walls, floors, etc. shall be the responsibility of the piping contractor. Verify that chases, shafts, etc. indicated on Drawings work are provided. In case of failure to do so, chase or openings will be cut by piping contractor and patched as required to accommodate work.

3.10. EXCAVATING AND BACK FILLING FOR MECHANICAL WORK

A. Excavating and backfilling for piping installation shall be provided under this section. Excavation for all pipes, ducts, conduits, etc., shall be carefully protected from damage due to frost, water or other causes, and work damage shall be promptly and properly repaired. No excavating shall be done as to undermine or damage bearing of column or wall footings. Excavations below footings shall not be deeper than one half the horizontal distance from such footings or foundations. Provide necessary barricades, shoring, sheeting, etc. for protection of the work and personnel. No backfilling shall be done until all work which is to be covered has been inspected, tested as required and approved.

C. Excavation, installation, backfill, and restoration procedures for buried pipe are detailed in Section 16.1.

3.11 CUTTING AND PATCHING

A. Cutting and patching required to install any portion of this work or to correct defects in work shall be the responsibility of the CONTRACTOR. Patching shall be done in a manner to match existing construction.

B. Cutting and patching necessary to install any work shall be carefully done under the direction of Owner. Damage caused by neglect of this clause shall be made good under this Section.

C. Patching of surfaces remaining after Mechanical demolition shall be done under this section.

3.12 PROTECTION

A. Openings and equipment, where set shall be covered to prevent obstruction to pipes, breakage, misuse or disfigurement of equipment. Openings in equipment shall be immediately covered up on uncrating or receipt at the job site and shall remain covered until permanent connection is made.

B. Damage to piping, fixtures or equipment shall be the responsibility of the CONTRACTOR. Material installed shall be kept clean until final acceptance of entire WORK by OWNER.

C. Provide protective guards for devices such as thermostats, valves, switches and sprinkler heads which are located in mechanical rooms, loading docks, stairwells.

D. Protect all work against injury by freezing or exposure to weather while stored or installed in place. All motors to be wrapped for protection against moisture.

3.13. FIRE SAFETY PRECAUTIONS

A. Cutting, welding, brazing or sweating operations carried on in the vicinity of or accessible to combustible material, shall be adequately protected to make certain that a spark or hot slag does not reach the combustible material and start a fire.

B. When it is necessary to do cutting, welding, brazing or sweating close to wood construction, in pipe shafts, or other locations where combustible materials cannot be removed or adequately protected, employ fire proof blankets and proper fire extinguishers. A helper shall be stationed nearby to guard against sparks and fire.

C. Whenever combustible material has been exposed to molten metal or hot slag from welding or cutting operations, or splatter from electric arc, a guard shall be kept at the place of the work for at least one hour after completion to make sure that smoldering fires have not been started.

END OF SECTION 16-4

NO.	DATE
BY	
REVISION	
NO.	DATE
BY	
REVISION	
NO.	DATE
BY	
REVISION	

ACEng
ADAMS & CHRISTENSEN ENGINEERING, INC.
782 WEXFORD CT.
GRAYSLAKE, ILLINOIS 60030
CERTIFICATE OF AUTHORIZATION NO. 05379

GREEN ARROW
2759 LONG ROAD
WOOSTER, OH 44691

THIS DRAWING CONTAINS VALUABLE INFORMATION THAT BELONGS TO GREEN ARROW ("GA"), AND IS SUBJECT TO A CONFIDENTIALITY AND NONDISCLOSURE AGREEMENT. GA IS THE AUTHOR AND OWNER OF THIS DRAWING, AND RETAINS ALL COMMON LAW, STATUTORY AND OTHER RIGHTS, INCLUDING COPYRIGHTS THEREIN. THE INFORMATION CONTAINED HEREIN MAY NOT AT ANY TIME BE USED FOR ANY UNAUTHORIZED PURPOSE, NOR REPRODUCED BY OR PROVIDED TO ANY THIRD PARTY, WITHOUT THE PRIOR WRITTEN CONSENT OF GA.

©2020, GREEN ARROW.
ALL RIGHTS RESERVED.

GREEN ERA
PIPING SPECS

GREEN ERA
650 W. 83RD ST.
CHICAGO, IL 60620

AREA	CHECKED BY
	NM
JOB NO.	DRAWN BY
1512	BR
SCALE	DATE
SEE NOTE	11/16/2021
DWG NO.	
SHEET NO.	
DP-005	

Green Arrow\02 Projects\1512 Chicago - Feldman - Green Era\07 Drawings\04 Construction\Piping Specs.dwg

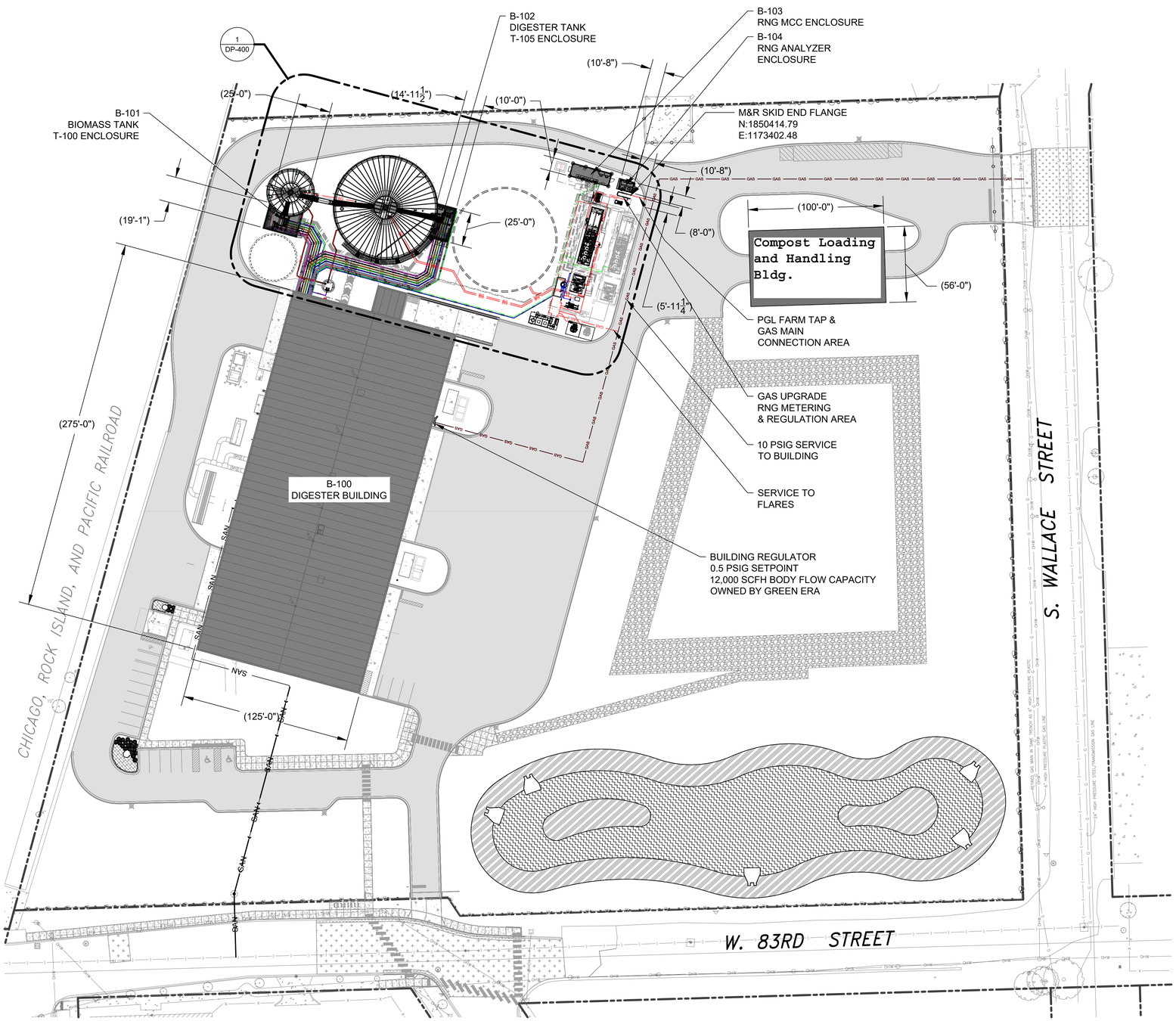

GREEN ERA
PLANT YARD PIPING

SCALE: 1" = 40'-0"

0 40' 80'

ISSUED FOR
CONSTRUCTION
REV. DATE
AUG 31, 2021

NO.	DATE
BY	
REVISION	
NO.	DATE
BY	
REVISION	
NO.	DATE
1	08/24/2021
BY	
BR	
REVISION	
RE-ISSUE WITH EQUIPMENT SUBMITTALS TO DATE	

ACEng
ADAMS & CHRISTENSEN ENGINEERING, INC.
782 WEXFORD CT.
GRAYSLAKE, ILLINOIS 60030
CERTIFICATE OF AUTHORIZATION NO. 05379

GREEN ARROW
2759 LONG ROAD
WOOSTER, OH 44691

THIS DRAWING CONTAINS VALUABLE CONFIDENTIAL AND PROPRIETARY INFORMATION THAT BELONGS TO GREEN ARROW ("GA"), AND IS SUBJECT TO A CONFIDENTIALITY AND NONDISCLOSURE AGREEMENT. GA IS THE AUTHOR AND OWNER OF THIS DRAWING, AND RETAINS ALL COMMON LAW, STATUTORY AND OTHER RIGHTS, INCLUDING COPYRIGHTS THEREIN. NEITHER THE DRAWING NOR THE INFORMATION CONTAINED HEREIN MAY NOT, AT ANY TIME BE USED FOR ANY UNAUTHORIZED PURPOSE, NOR REPRODUCED BY OR PROVIDED TO ANY THIRD PARTY, WITHOUT THE PRIOR WRITTEN CONSENT OF GA.

©2020, GREEN ARROW.
ALL RIGHTS RESERVED.

GREEN ERA
PLANT YARD PIPING

GREEN ERA
650 W. 83RD ST.
CHICAGO, IL 60620

AREA	CHECKED BY
	NM
JOB NO.	DRAWN BY
1512	BR
SCALE	DATE
SEE NOTE	02/12/2021
DWG NO.	
SHEET NO.	
DP-100	

Green Arrow\02 Projects\1512 Chicago - Feldman - Green Era\07 Drawings\04 Construction\Green Era Equipment Layout.dwg

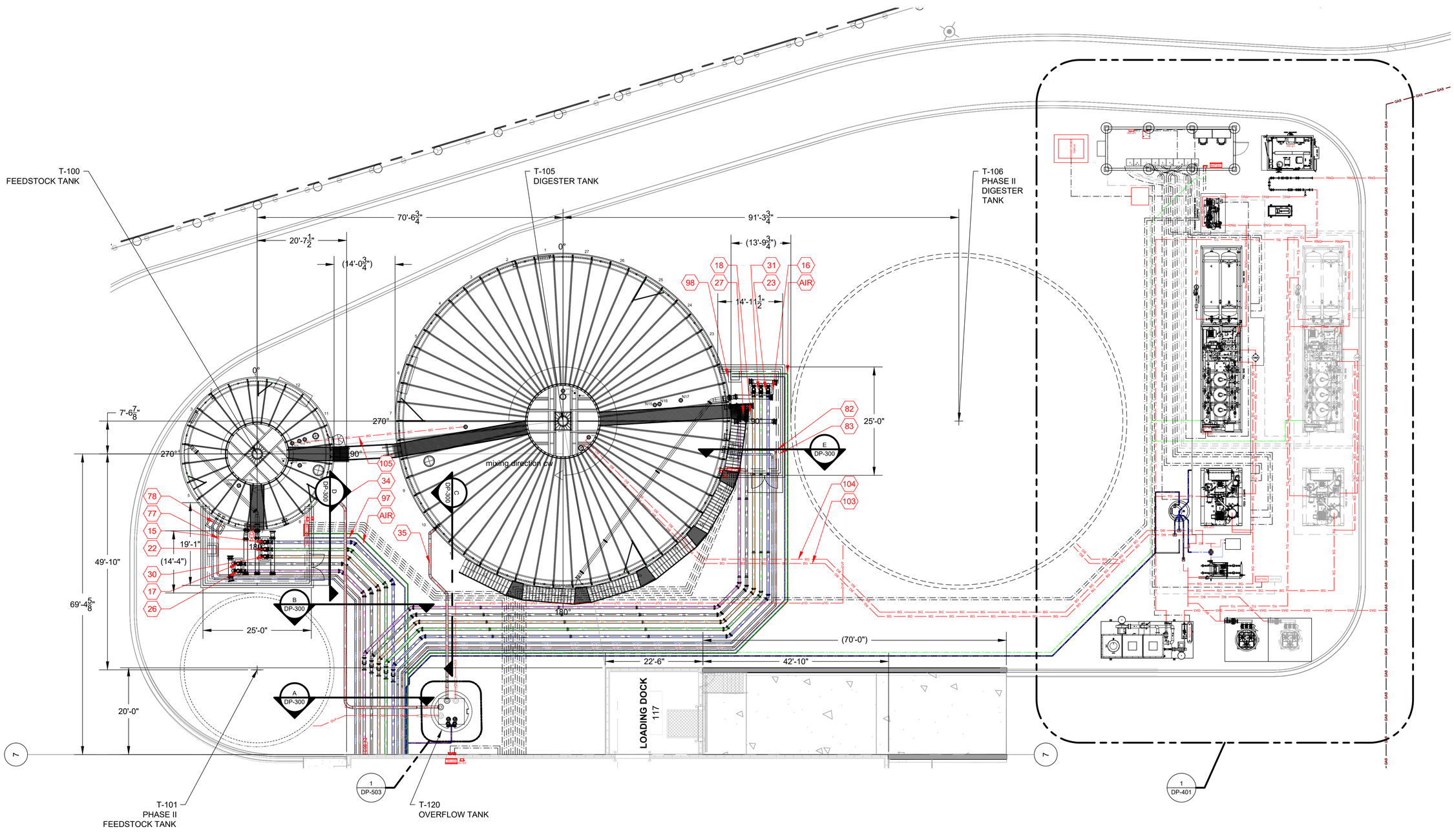

TANK YARD
PROCESS PIPING PLAN
SCALE: 3/32" = 1'-0"

3/32" = 1'-0"

ISSUED FOR CONSTRUCTION
REV. DATE
AUG 31, 2021

NO.	DATE
BY	
REVISION	

NO.	DATE
BY	
REVISION	

NO.	DATE
1	08/24/2021
BY	BR
REVISION	RE-ISSUE WITH EQUIPMENT SUBMITTALS TO DATE

ACEng
ADAMS & CHRISTENSEN ENGINEERING, INC.
782 WEXFORD CT.
GRAYSLAKE, ILLINOIS 60030
CERTIFICATE OF AUTHORIZATION NO. 05379

GREEN ARROW
2759 LONG ROAD
WOOSTER, OH 44691

THIS DRAWING CONTAINS VALUABLE CONFIDENTIAL AND PROPRIETARY INFORMATION THAT BELONGS TO GREEN ARROW ("GA") AND IS SUBJECT TO A CONFIDENTIALITY AND NONDISCLOSURE AGREEMENT. GA IS THE AUTHOR AND OWNER OF THIS DRAWING, AND RETAINS ALL COMMON LAW, STATUTORY AND OTHER RIGHTS AND PRIVILEGES WITH RESPECT HERETO, INCLUDING COPYRIGHTS. THE INFORMATION CONTAINED HEREIN MAY NOT BE USED, NOR MAY ANY PART BE USED FOR ANY UNAUTHORIZED PURPOSE, NOR REPRODUCED BY OR PROVIDED TO ANY THIRD PARTY, WITHOUT THE PRIOR WRITTEN CONSENT OF GA.

©2020, GREEN ARROW.
ALL RIGHTS RESERVED.

TANK YARD
PROCESS PIPING

GREEN ERA
650 W. 83RD ST.
CHICAGO, IL 60620

AREA	CHECKED BY
	NM
JOB NO. 1512	DRAWN BY BR
SCALE SEE NOTE	DATE 04/09/2021
DWG NO.	
SHEET NO. DP-400	

Green Arrow\02 Projects\1512 Chicago - Feldman - Green Era\07 Drawings\04 Construction\Green Era Equipment Layout.dwg

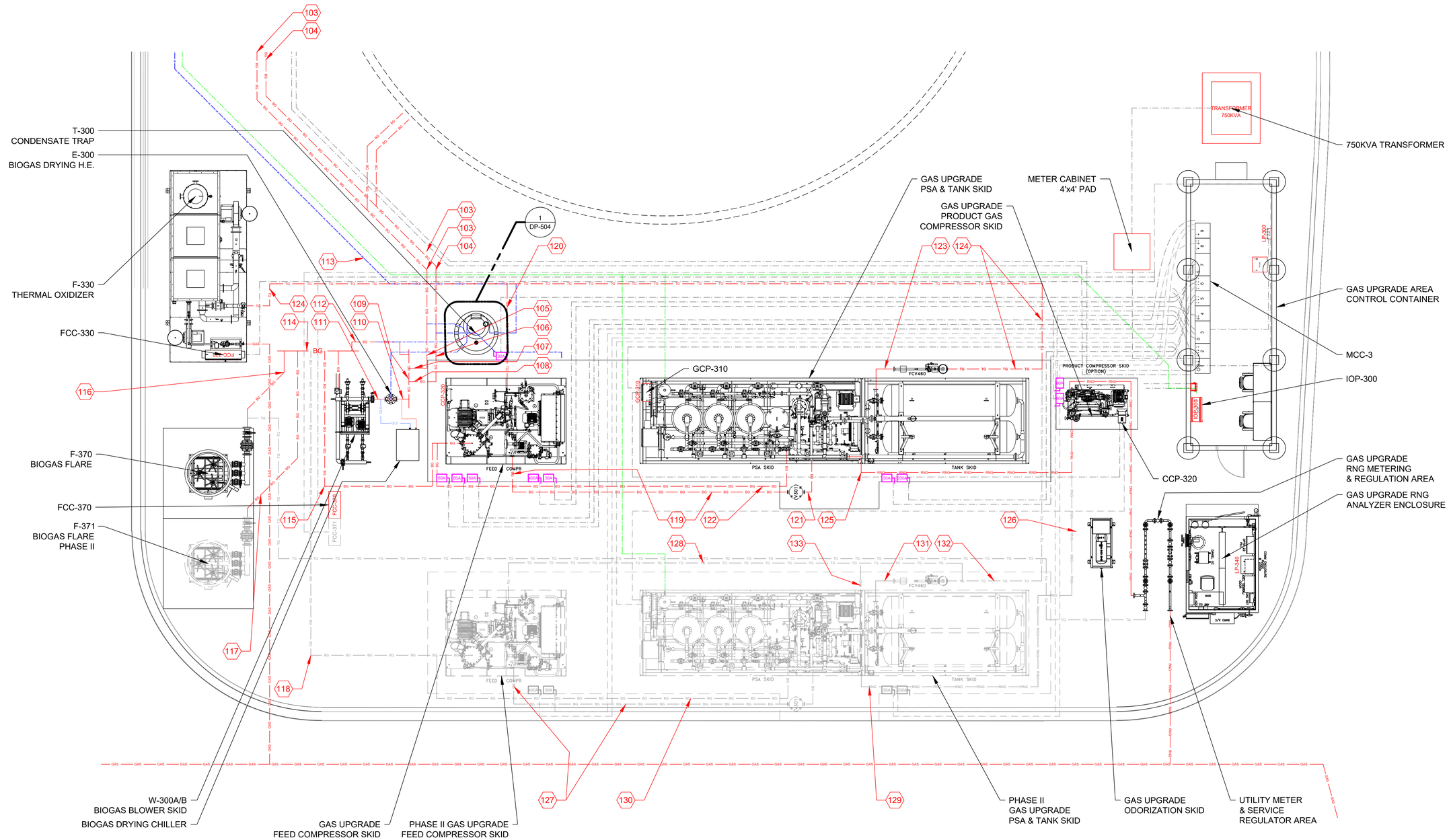

DIGESTER BUILDING
GAS UPGRADE AREA DETAIL

SCALE: 3/16" = 1'-0"

3/16" = 1'-0"

1' 0 1' 2' 3' 4' 6' 8' 10'

ISSUED FOR CONSTRUCTION
REV. DATE
AUG 31, 2021

NO.	DATE
BY	
REVISION	

NO.	DATE
1	08/24/2021
BY	BR
REVISION	RE-ISSUE WITH EQUIPMENT SUBMITTALS TO DATE

ACEng
ADAMS & CHRISTENSEN ENGINEERING, INC.
782 WEXFORD CT.
GRAYSLAKE, ILLINOIS 60030
CERTIFICATE OF AUTHORIZATION NO. 05379

GREEN ARROW
2759 LONG ROAD
WOOSTER, OH 44691

THIS DRAWING CONTAINS VALUABLE CONFIDENTIAL AND PROPRIETARY INFORMATION THAT BELONGS TO GREEN ARROW ("GA"), AND IS SUBJECT TO A CONFIDENTIALITY AND NONDISCLOSURE AGREEMENT. GA IS THE AUTHOR AND OWNER OF THIS DRAWING, AND RETAINS ALL COMMON LAW, STATUTORY AND OTHER RIGHTS, INCLUDING COPYRIGHTS, THEREIN. HEREIN, INCLUDING COPYRIGHTS, THE INFORMATION CONTAINED HEREIN MAY NOT, AT ANY TIME BE USED FOR ANY UNAUTHORIZED PURPOSE, NOR REPRODUCED BY OR PROVIDED TO ANY THIRD PARTY, WITHOUT THE PRIOR WRITTEN CONSENT OF GA.

©2020, GREEN ARROW.
ALL RIGHTS RESERVED.

DIGESTER BUILDING
YARD DETAILS
PROCESS PIPING

GREEN ERA
650 W. 83RD ST.
CHICAGO, IL 60620

AREA	CHECKED BY
	NM
JOB NO.	DRAWN BY
1512	BR
SCALE	DATE
SEE NOTE	04/09/2021
DWG NO.	

SHEET NO.
DP-401

Green Arrow/22 Projects/1512 Chicago - Feldman - Green Era/07 Drawings/04 Construction/Green Era Equipment Layout.dwg

LOWER LEVEL & TANK YARD
PROCESS PIPING PLAN

SCALE: 1/16" = 1'-0"

ISSUED FOR CONSTRUCTION
REV. DATE
AUG 31, 2021

NO.	DATE
1	08/24/2021

BY: BR

REVISION: RE-ISSUE WITH EQUIPMENT SUBMITTALS TO DATE

ACEng
ADAMS & CHRISTENSEN ENGINEERING, INC.
782 WEXFORD CT.
GRAYSLAKE, ILLINOIS 60030
CERTIFICATE OF AUTHORIZATION NO. 05379

GREEN ARROW
2759 LONG ROAD
WOOSTER, OH 44691

THIS DRAWING CONTAINS VALUABLE CONFIDENTIAL AND PROPRIETARY INFORMATION THAT BELONGS TO GREEN ARROW ("GA"), AND IS SUBJECT TO A CONFIDENTIALITY AND NONDISCLOSURE AGREEMENT. GA IS THE AUTHOR AND OWNER OF THIS DRAWING, AND RETAINS ALL COMMON LAW, STATUTORY AND OTHER RIGHTS AND PRIVILEGES WITH RESPECT HERETO, INCLUDING COPYRIGHTS. THE INFORMATION CONTAINED HEREIN MAY NOT AT ANY TIME BE USED FOR ANY UNAUTHORIZED PURPOSE, NOR REPRODUCED BY OR PROVIDED TO ANY THIRD PARTY, WITHOUT THE PRIOR WRITTEN CONSENT OF GA.

©2020, GREEN ARROW.
ALL RIGHTS RESERVED.

DIGESTER BUILDING
LOWER LEVEL & TANK YARD
PROCESS PIPING

GREEN ERA
650 W. 83RD ST.
CHICAGO, IL 60620

AREA	CHECKED BY NM
JOB NO. 1512	DRAWN BY BR
SCALE SEE NOTE	DATE 12/18/2020
DWG NO.	
SHEET NO. DP-410	

Green Arrow\02 Projects\1512 Chicago - Feldman - Green Era\07 Drawings\04 Construction\Green Era Equipment Layout.dwg

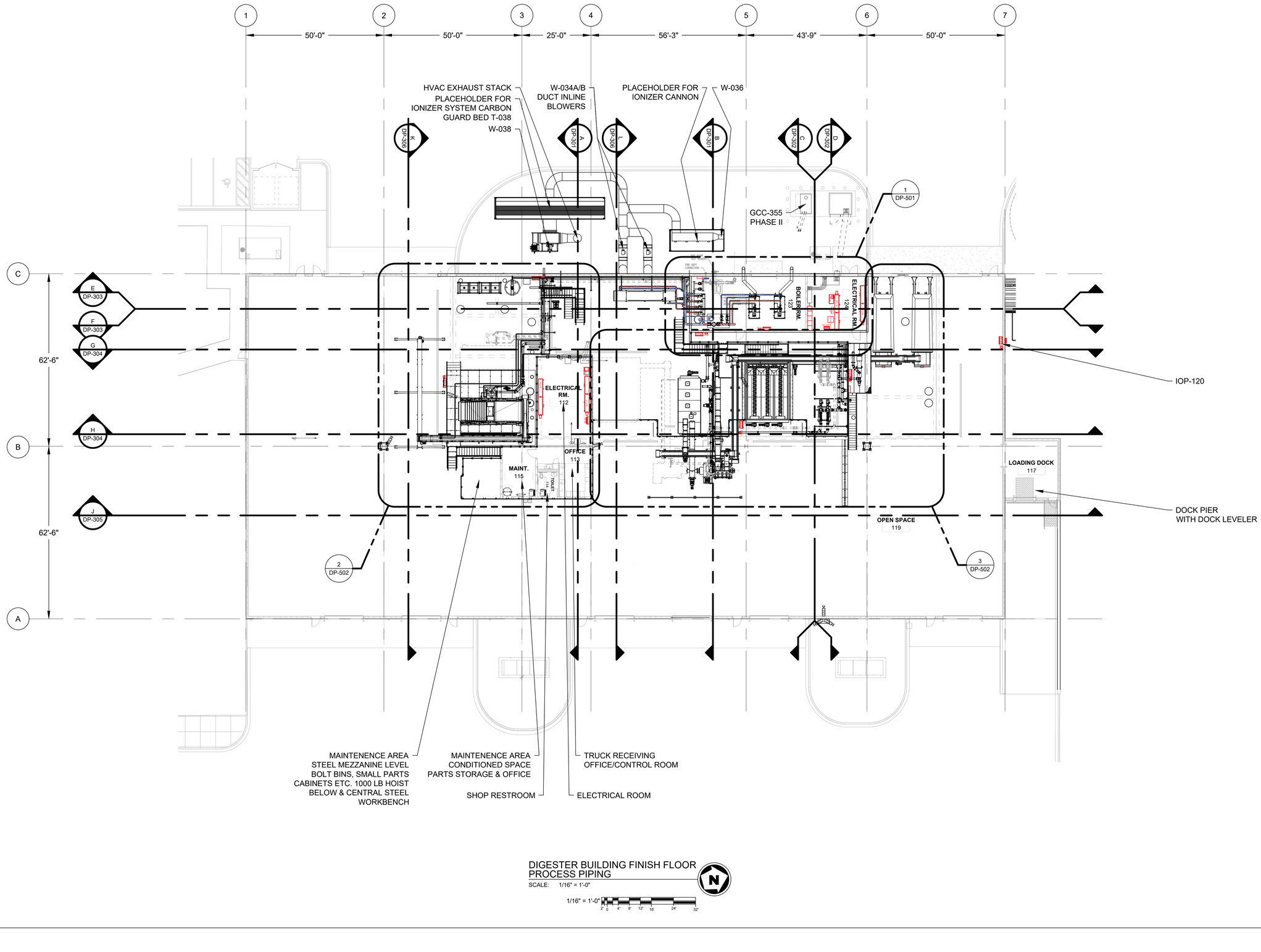

DIGESTER BUILDING FINISH FLOOR PROCESS PIPING

SCALE: 1/16" = 1'-0"

1/16" = 1'-0"

2' 0 4' 8' 12' 16' 24' 32'

ISSUED FOR CONSTRUCTION
REV. DATE
AUG 31, 2021

NO.	DATE
BY	
REVISION	
NO.	DATE
BY	
REVISION	
1	08/24/2021
BY	BR
REVISION	RE-ISSUE WITH EQUIPMENT SUBMITTALS TO DATE

ACEng
ADAMS & CHRISTENSEN ENGINEERING, INC.
782 WEXFORD CT.
GRAYSLAKE, ILLINOIS 60030
CERTIFICATE OF AUTHORIZATION NO. 05379

GREEN ARROW
2759 LONG ROAD
WOOSTER, OH 44691

THIS DRAWING CONTAINS VALUABLE CONFIDENTIAL AND PROPRIETARY INFORMATION THAT BELONGS TO GREEN ARROW ("GA") AND IS SUBJECT TO A CONFIDENTIALITY AND NONDISCLOSURE AGREEMENT. GA IS THE AUTHOR AND OWNER OF THIS DRAWING, AND RETAINS ALL COMMON LAW, STATUTORY AND OTHER RIGHTS AND PRIVILEGES WITH RESPECT HERETO, INCLUDING COPYRIGHTS. THE INFORMATION CONTAINED HEREIN MAY NOT AT ANY TIME BE USED FOR ANY UNAUTHORIZED PURPOSE, NOR REPRODUCED BY OR PROVIDED TO ANY THIRD PARTY, WITHOUT THE PRIOR WRITTEN CONSENT OF GA.

©2020, GREEN ARROW.
ALL RIGHTS RESERVED.

DIGESTER BUILDING
PROCESS PIPING

GREEN ERA
650 W. 83RD ST.
CHICAGO, IL 60620

AREA	CHECKED BY
	NM
JOB NO.	DRAWN BY
1512	BR
SCALE	DATE
SEE NOTE	04/09/2021
DWG NO.	
SHEET NO.	
DP-500	

Green Arrow/02 Projects/1512 Chicago - Feldman - Green Era/07 Drawings/04 Construction/Green Era Equipment Layout.dwg

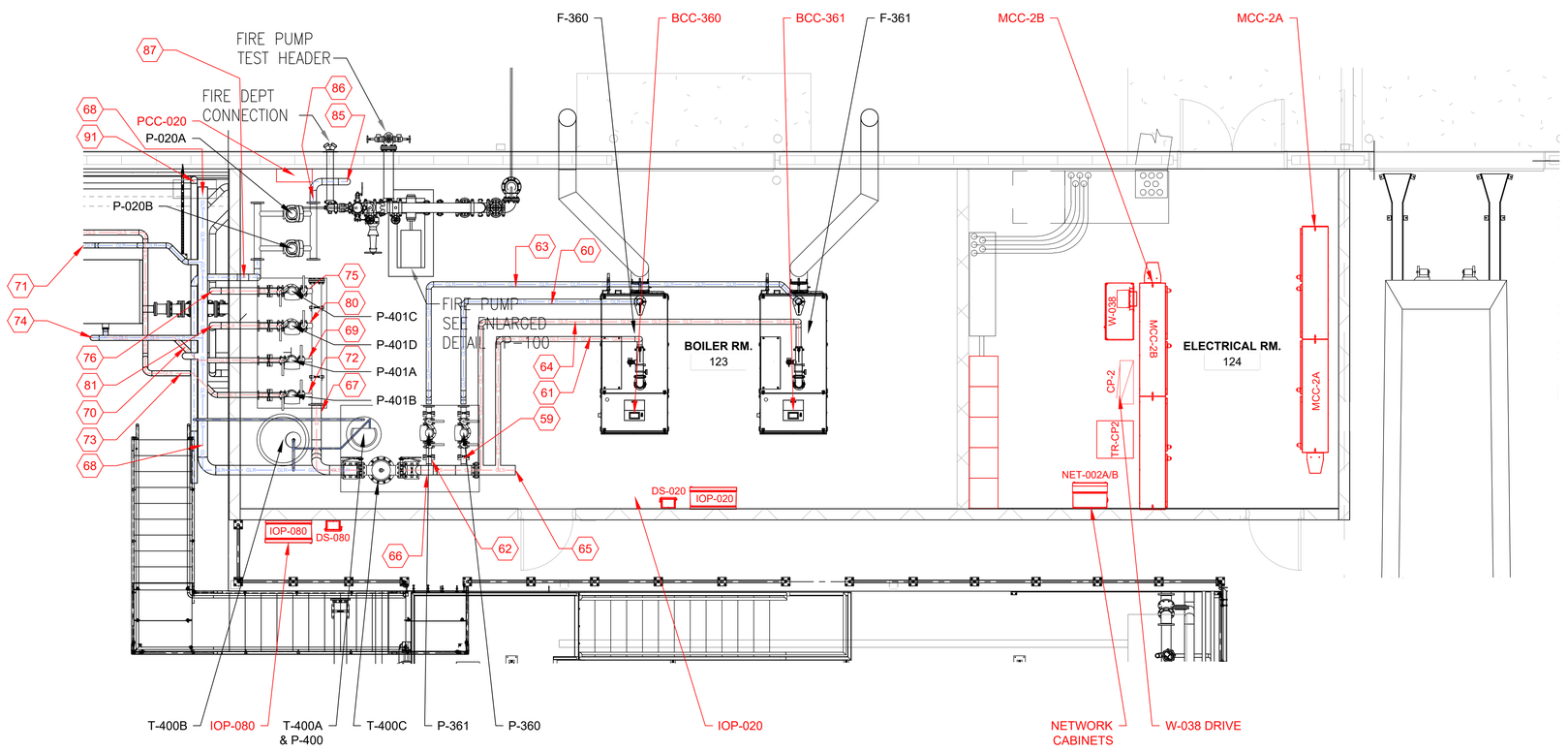

DIGESTER BUILDING
BOILER & ELECTRICAL RM DETAIL

1
DP-500

SCALE: 1/4" = 1'-0"

1/4" = 1'-0"
1' 0 2' 4' 6' 8'

ISSUED FOR CONSTRUCTION
REV. DATE
AUG 31, 2021

NO.	DATE
BY	
REVISION	

NO.	DATE
BY	
REVISION	

NO.	DATE
1	08/24/2021
BY	
BR	
REVISION	
RE-ISSUE WITH EQUIPMENT SUBMITTALS TO DATE	

ACEng
ADAMS & CHRISTENSEN ENGINEERING, INC.
782 WEXFORD CT.
GRAYSLAKE, ILLINOIS 60030
CERTIFICATE OF AUTHORIZATION NO. 05379

GREEN ARROW
2759 LONG ROAD
WOOSTER, OH 44691

THIS DRAWING CONTAINS VALUABLE CONFIDENTIAL AND PROPRIETARY INFORMATION OF GREEN ARROW ("GA") AND IS SUBJECT TO A CONFIDENTIALITY AND NONDISCLOSURE AGREEMENT. GA IS THE AUTHOR AND OWNER OF THIS DRAWING, AND RETAINS ALL COMMON LAW, STATUTORY AND OTHER RIGHTS AND PRIVILEGES WITH RESPECT THERETO. THE INFORMATION CONTAINED HEREIN MAY NOT AT ANY TIME BE USED FOR ANY UNAUTHORIZED PURPOSE, NOR REPRODUCED BY OR PROVIDED TO ANY THIRD PARTY, WITHOUT THE PRIOR WRITTEN CONSENT OF GA.

©2020, GREEN ARROW.
ALL RIGHTS RESERVED.

DIGESTER BUILDING
PROCESS PIPING

GREEN ERA
650 W. 83RD ST.
CHICAGO, IL 60620

AREA	CHECKED BY
	NM
JOB NO.	DRAWN BY
1512	BR
SCALE	DATE
SEE NOTE	04/09/2021

DWG NO.

SHEET NO.
DP-501

Green Arrow\02 Projects\1512 Chicago - Feldman - Green Era\07 Drawings\04 Construction\Green Era Equipment Layout.dwg

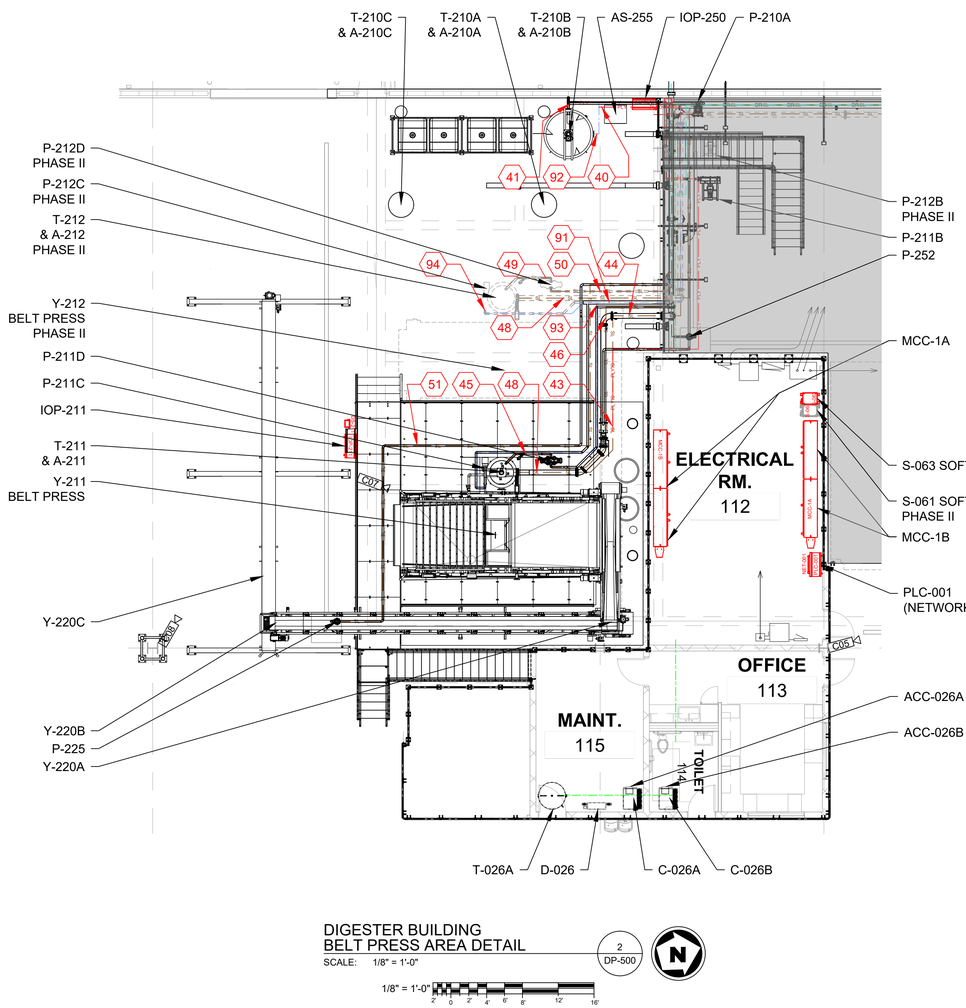

DIGESTER BUILDING
BELT PRESS AREA DETAIL

SCALE: 1/8" = 1'-0"

2 DP-500

1/8" = 1'-0"

2' 0 2' 4' 6' 8' 12' 16'

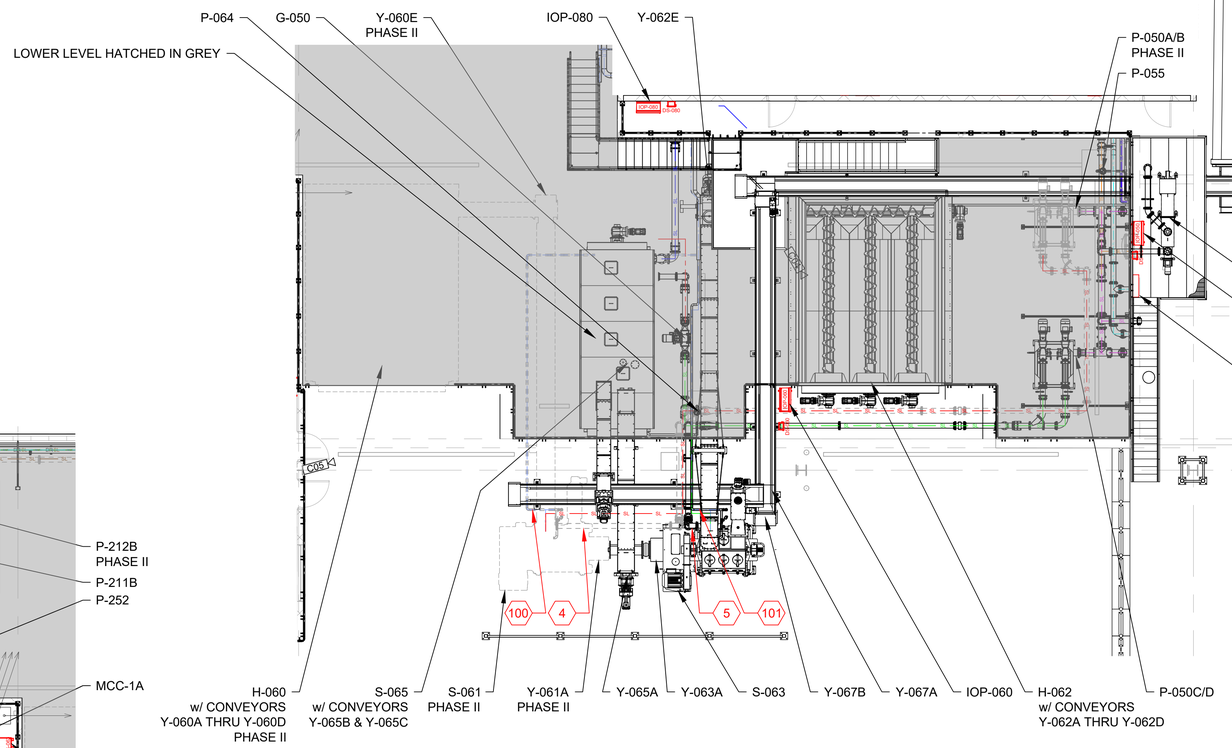

DIGESTER BUILDING
SOLIDS RECEIVING AREA DETAIL

SCALE: 1/8" = 1'-0"

3 DP-500

1/8" = 1'-0"

2' 0 2' 4' 6' 8' 12' 16'

FOR CONSTRUCTION
REV. DATE
AUG 31, 2021

NO.	DATE
BY	
REVISION	
NO.	DATE
BY	
REVISION	
1	08/24/2021
BY	BR
REVISION	RE-ISSUE WITH EQUIPMENT SUBMITTALS TO DATE

ACEng
ADAMS & CHRISTENSEN ENGINEERING, INC.
782 WEXFORD CT.
GRAYSLAKE, ILLINOIS 60030
CERTIFICATE OF AUTHORIZATION NO. 05379

GREEN ARROW
2759 LONG ROAD
WOOSTER, OH 44691

THIS DRAWING CONTAINS VALUABLE PROPRIETARY AND CONFIDENTIAL INFORMATION THAT BELONGS TO GREEN ARROW ("GA"), AND IS SUBJECT TO A CONFIDENTIALITY AND NONDISCLOSURE AGREEMENT. GA IS THE AUTHOR AND OWNER OF THIS DRAWING, AND RETAINS ALL COMMON LAW, STATUTORY AND OTHER RIGHTS, INCLUDING COPYRIGHTS THEREIN. THE INFORMATION CONTAINED HEREIN MAY NOT AT ANY TIME BE USED FOR ANY UNAUTHORIZED PURPOSE, NOR REPRODUCED BY OR PROVIDED TO ANY THIRD PARTY, WITHOUT THE PRIOR WRITTEN CONSENT OF GA.

©2020, GREEN ARROW.
ALL RIGHTS RESERVED.

DIGESTER BUILDING
PROCESS PIPING

GREEN ERA
650 W. 83RD ST.
CHICAGO, IL 60620

AREA	CHECKED BY
	NM
JOB NO.	DRAWN BY
1512	BR
SCALE	DATE
SEE NOTE	04/09/2021
DWG NO.	
SHEET NO.	
DP-502	

Green Arrow\02 Projects\1512 Chicago - Feldman - Green Era\07 Drawings\04 Construction\Green Era Equipment Layout.dwg

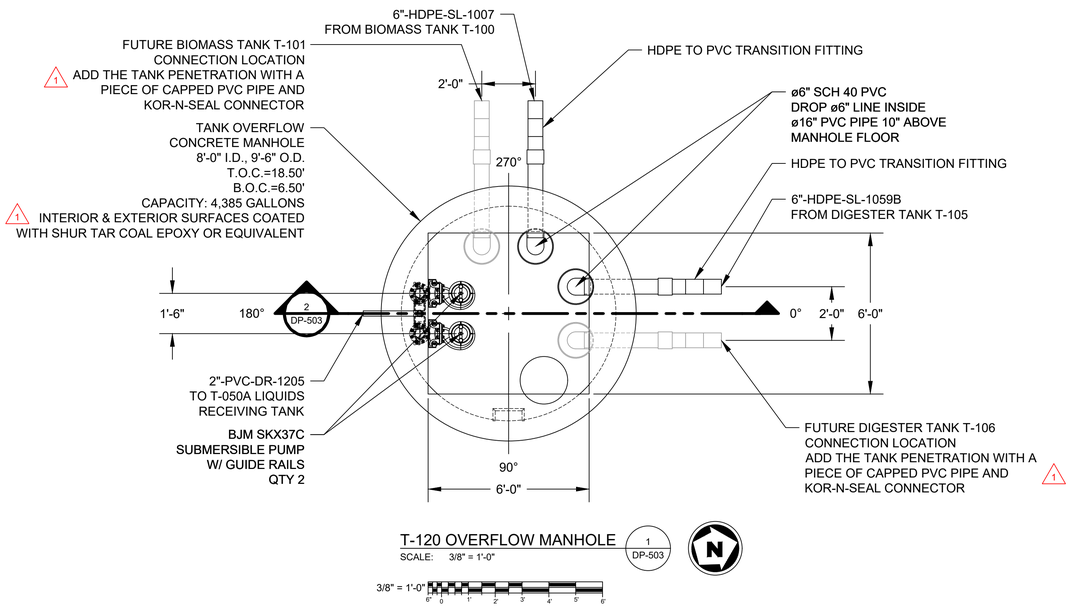

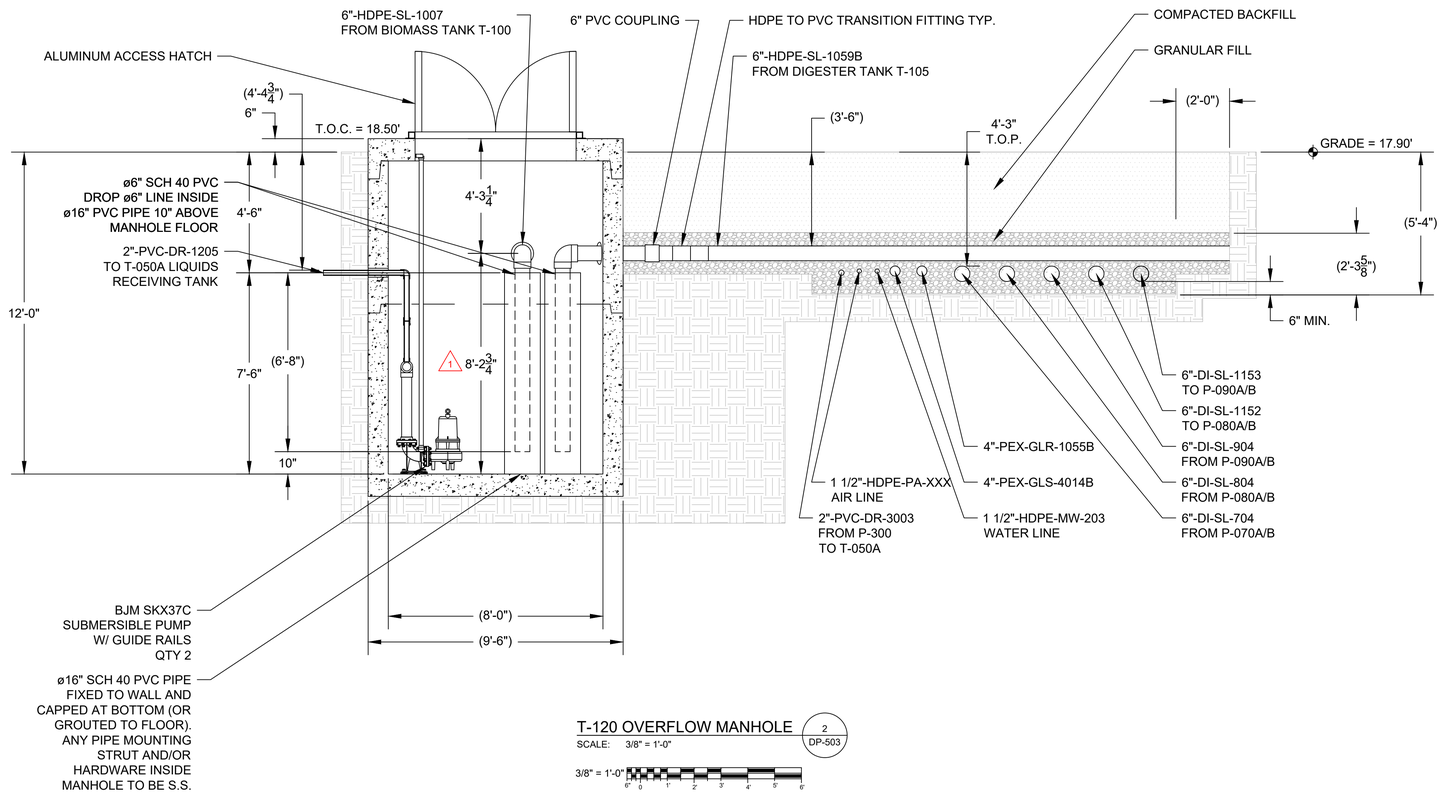

ISSUED FOR CONSTRUCTION
REV. DATE
AUG 31, 2021

NO.	DATE
BY	
REVISION	

NO.	DATE
BY	
REVISION	

NO.	DATE
1	08/31/2021
BY	
BR	
REVISION	
ADDED PIPE DIMS & RADIAL LOCATIONS & COATING NOTE	

ACEng
ADAMS & CHRISTENSEN ENGINEERING, INC.
782 WEXFORD CT.
GRAYSLAKE, ILLINOIS 60030
CERTIFICATE OF AUTHORIZATION NO. 05379

GREEN ARROW
2759 LONG ROAD
WOOSTER, OH 44691

THIS DRAWING CONTAINS VALUABLE CONFIDENTIAL AND PROPRIETARY INFORMATION THAT BELONGS TO GREEN ARROW ("GA") AND IS SUBJECT TO A CONFIDENTIALITY AND NONDISCLOSURE AGREEMENT. GA IS THE AUTHOR AND OWNER OF THIS DRAWING, AND RETAINS ALL COMMON LAW, STATUTORY AND OTHER RIGHTS AND PRIVILEGES WITH RESPECT THERETO. THE INFORMATION CONTAINED HEREIN MAY NOT AT ANY TIME BE USED FOR ANY UNAUTHORIZED PURPOSE, NOR REPRODUCED BY OR PROVIDED TO ANY THIRD PARTY, WITHOUT THE PRIOR WRITTEN CONSENT OF GA.

©2020, GREEN ARROW.
ALL RIGHTS RESERVED.

TANK YARD
PROCESS PIPING
DETAILS

GREEN ERA
650 W. 83RD ST.
CHICAGO, IL 60620

AREA	CHECKED BY
	NM
JOB NO.	DRAWN BY
1512	BR
SCALE	DATE
SEE NOTE	04/15/2021
DWG NO.	
SHEET NO.	
DP-503	

Green Arrow\02 Projects\1512 Chicago - Feldman - Green Era\07 Drawings\04 Construction\Green Era Equipment Layout Sections.dwg

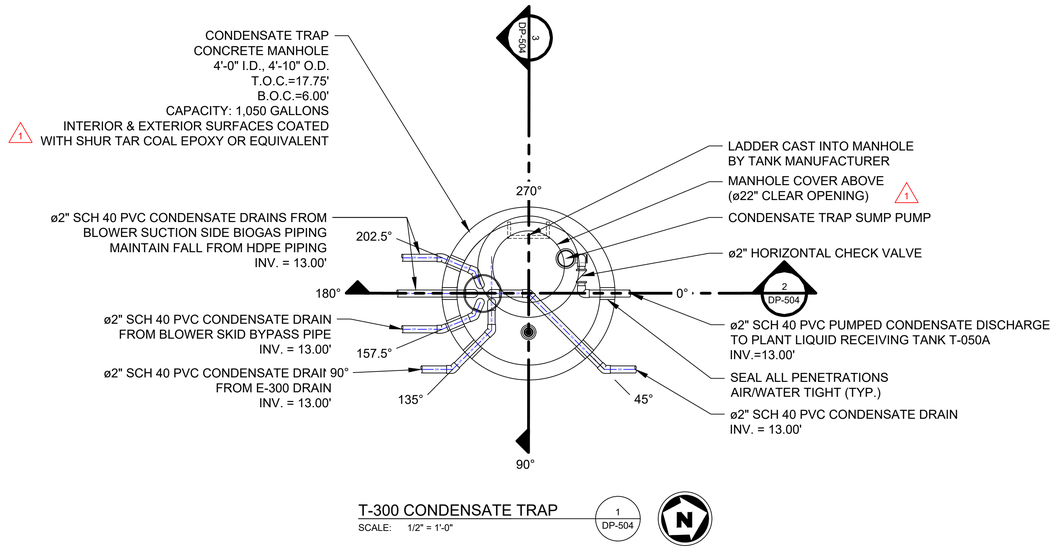

T-300 CONDENSATE TRAP — 1 / DP-504

SCALE: 1/2" = 1'-0"

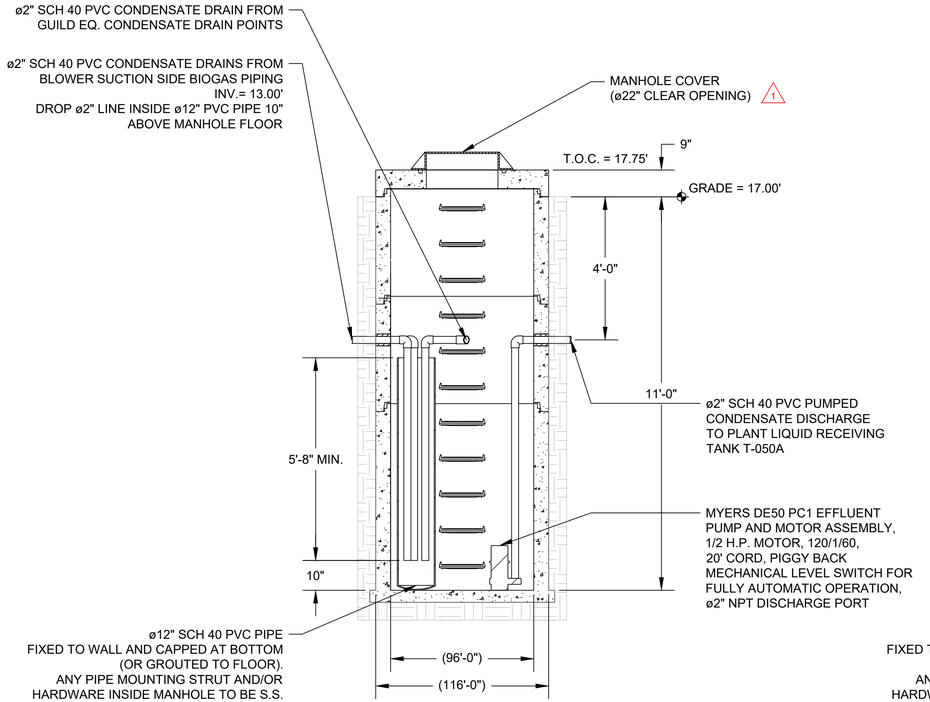

T-300 CONDENSATE TRAP — 2 / DP-504

SCALE: 1/2" = 1'-0"

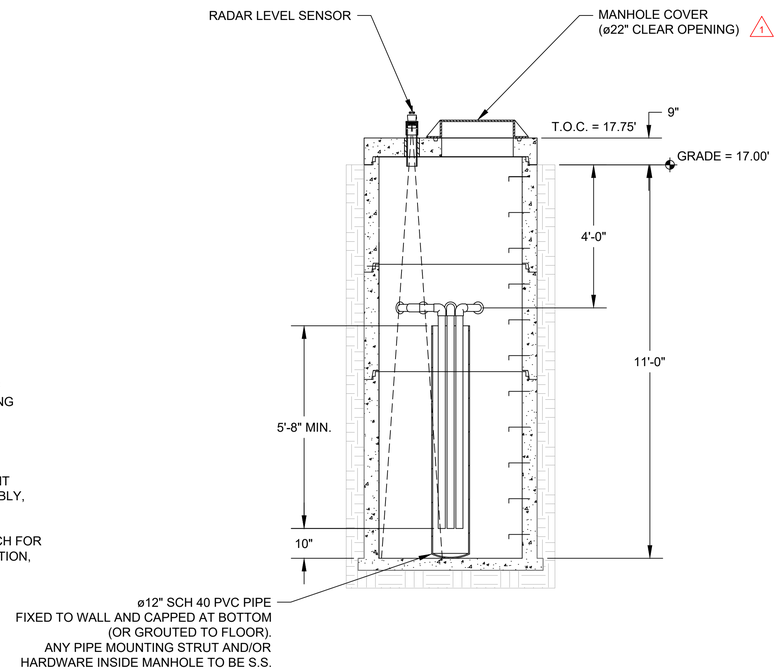

T-300 CONDENSATE TRAP — 3 / DP-504

SCALE: 1/2" = 1'-0"

ISSUED FOR CONSTRUCTION
REV. DATE
AUG 31, 2021

NO.	DATE
BY	
REVISION	

NO.	DATE
BY	
REVISION	

NO.	DATE
1	08/31/2021
BY: BR	
REVISION: ADDED HOLE RADIAL LOCATIONS, COATING NOTE & 22" C.O. WAS 24" STOCK FRAME & LID	

ACEng
ADAMS & CHRISTENSEN ENGINEERING, INC.
782 WEXFORD CT.
GRAYSLAKE, ILLINOIS 60030
CERTIFICATE OF AUTHORIZATION NO. 05379

GREEN ARROW
2759 LONG ROAD
WOOSTER, OH 44691

THIS DRAWING CONTAINS VALUABLE CONFIDENTIAL AND PROPRIETARY INFORMATION THAT BELONGS TO GREEN ARROW ("GA") AND IS SUBJECT TO A CONFIDENTIALITY AND NONDISCLOSURE AGREEMENT. GA IS THE AUTHOR AND OWNER OF THIS DRAWING, AND RETAINS ALL COMMON LAW, STATUTORY AND OTHER RIGHTS AND PRIVILEGES WITH RESPECT THERETO. THE INFORMATION CONTAINED HEREIN MAY NOT AT ANY TIME BE USED FOR ANY UNAUTHORIZED PURPOSE, NOR REPRODUCED BY OR PROVIDED TO ANY THIRD PARTY, WITHOUT THE PRIOR WRITTEN CONSENT OF GA.

©2020, GREEN ARROW.
ALL RIGHTS RESERVED.

TANK YARD
PROCESS PIPING
DETAILS

GREEN ERA
650 W. 83RD ST.
CHICAGO, IL 60620

AREA	CHECKED BY
	NM
JOB NO.	DRAWN BY
1512	BR
SCALE	DATE
SEE NOTE	06/18/2021
DWG NO.	
SHEET NO.	
DP-504	

Green Arrow\02 Projects\1512 Chicago – Feldman – Green Era\07 Drawings\04 Construction\Green Era Equipment Layout Sections.dwg

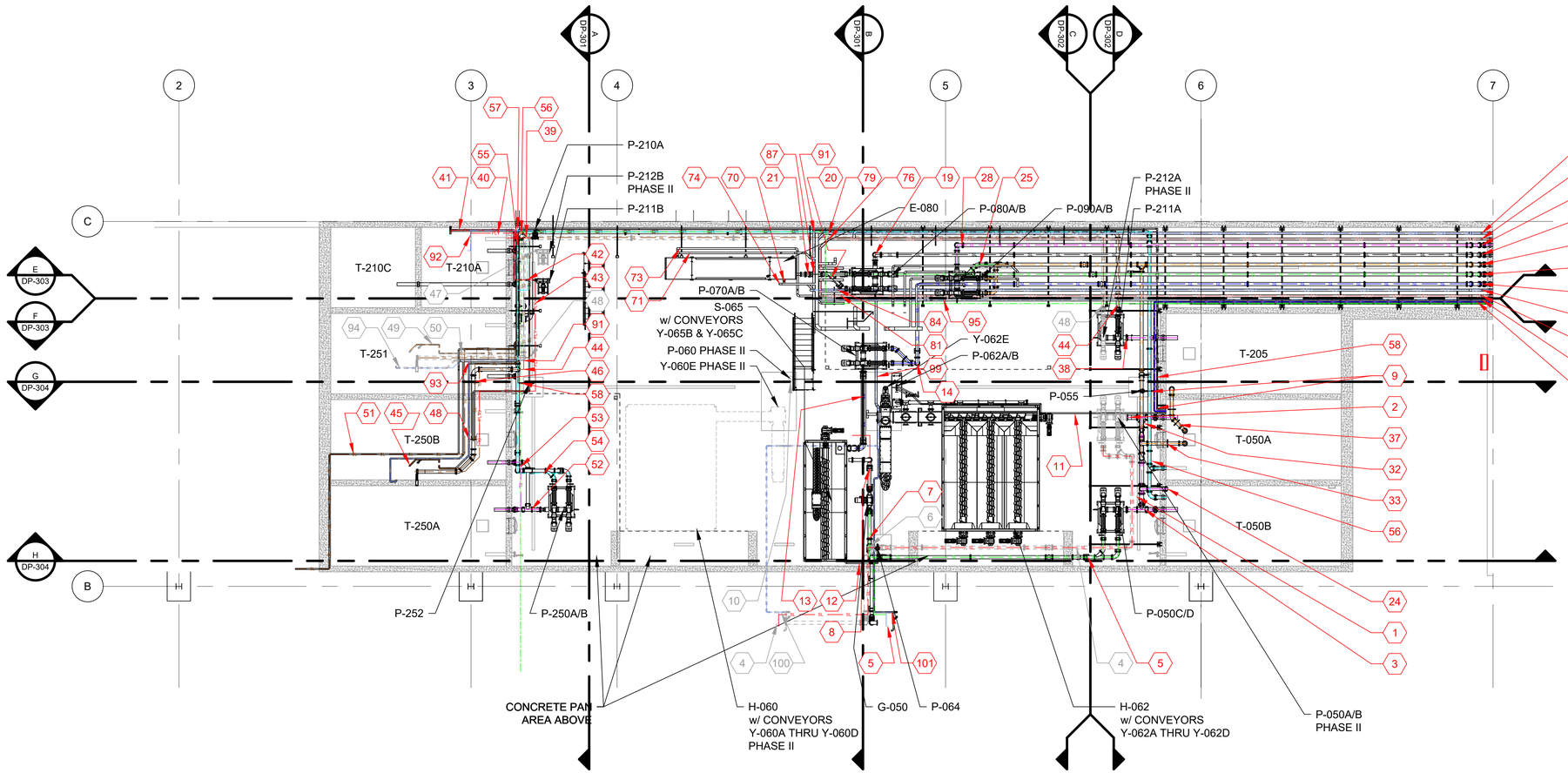

DIGESTER BUILDING LOWER LEVEL
PROCESS PIPING

SCALE: 3/32" = 1'-0"

1 / DP-410

3/32" = 1'-0"

2' 0 2' 4' 6' 8' 12' 16' 24'

ISSUED FOR CONSTRUCTION
REV. DATE
AUG 31, 2021

NO.	DATE
BY	
REVISION	

NO.	DATE
1	08/24/2021

BY: BR

REVISION: RE-ISSUE WITH EQUIPMENT SUBMITTALS TO DATE

ACEng
ADAMS & CHRISTENSEN ENGINEERING, INC.
782 WEXFORD CT.
GRAYSLAKE, ILLINOIS 60030
CERTIFICATE OF AUTHORIZATION NO. 05379

GREEN ARROW
2759 LONG ROAD
WOOSTER, OH 44691

THIS DRAWING CONTAINS VALUABLE CONFIDENTIAL AND PROPRIETARY INFORMATION THAT BELONGS TO GREEN ARROW ("GA"), AND IS SUBJECT TO A CONFIDENTIALITY AND NONDISCLOSURE AGREEMENT. GA RETAINS OWNERSHIP OF THIS DRAWING, AND RETAINS ALL COMMON LAW, STATUTORY AND OTHER RIGHTS AND PRIVILEGES WITH RESPECT HERETO, INCLUDING COPYRIGHTS. THE INFORMATION CONTAINED HEREIN MAY NOT BE USED, REPRODUCED OR DISCLOSED FOR UNAUTHORIZED PURPOSE, NOR REPRODUCED BY OR PROVIDED TO ANY THIRD PARTY, WITHOUT THE PRIOR WRITTEN CONSENT OF GA.

©2030, GREEN ARROW.
ALL RIGHTS RESERVED.

DIGESTER BUILDING
LOWER LEVEL
PROCESS PIPING

GREEN ERA
650 W. 83RD ST.
CHICAGO, IL 60620

AREA	CHECKED BY
	NM
JOB NO.	DRAWN BY
1512	BR
SCALE	DATE
SEE NOTE	04/09/2021

DWG NO.

SHEET NO.
DP-510

Green Arrow\02 Projects\1512 Chicago - Feldman - Green Era\07 Drawings\04 Construction\Green Era Equipment Layout.dwg

ATTACHMENT 8
PLAT OF SURVEY

PLAT OF SURVEY

LEGEND AND ABBREVIATIONS:

- PROPERTY LINE
- BUILDING
- CONCRETE
- ASPHALT
- DEPRESSED CURB
- CHAIN LINK FENCE
- IRON FENCE
- WOOD FENCE
- GUARDRAIL
- FOUND PK NAIL
- FOUND REBAR
- SET MAG NAIL
- SET/FOUND CUT CROSS
- COMBINATION SEWER
- SANITARY SEWER
- STORM SEWER
- W — WATER LINE
- G — GAS LINE
- COM — COMMUNICATION LINE
- SBC — SBC COMMUNICATION LINE
- T — TELEPHONE LINE
- OHW — OVERHEAD WIRE LINE
- UGE — UNDERGROUND ELECTRIC LINE
- x BC17.09 — BACK OF CURB ELEVATION
- x FL17.68 — FLOW LINE ELEVATION
- x EP17.23 — EDGE OF PAVEMENT ELEVATION
- x FF17.38 — FINISH FLOOR ELEVATION
- MANHOLE
- WATER MANHOLE
- ELECTRIC MANHOLE
- TELEPHONE MANHOLE
- CURB INLET
- CATCH BASIN
- AREA DRAIN
- POWER POLE W/GUY WIRE
- UTILITY POLE
- LIGHT POLE
- FIRE HYDRANT
- GAS VALVE
- GAS METER
- ELECTRIC METER
- BUFFALO BOX
- WATER VALVE
- TREE—DECIDUOUS
- TREE—EVERGREEN
- BUSH
- POST
- SIGN
- BOLLARD
- SPRINKLER
- CLEANOUT

GRAPHIC SCALE

30 0 15 30 60

(IN FEET)
1 inch = 30 ft.

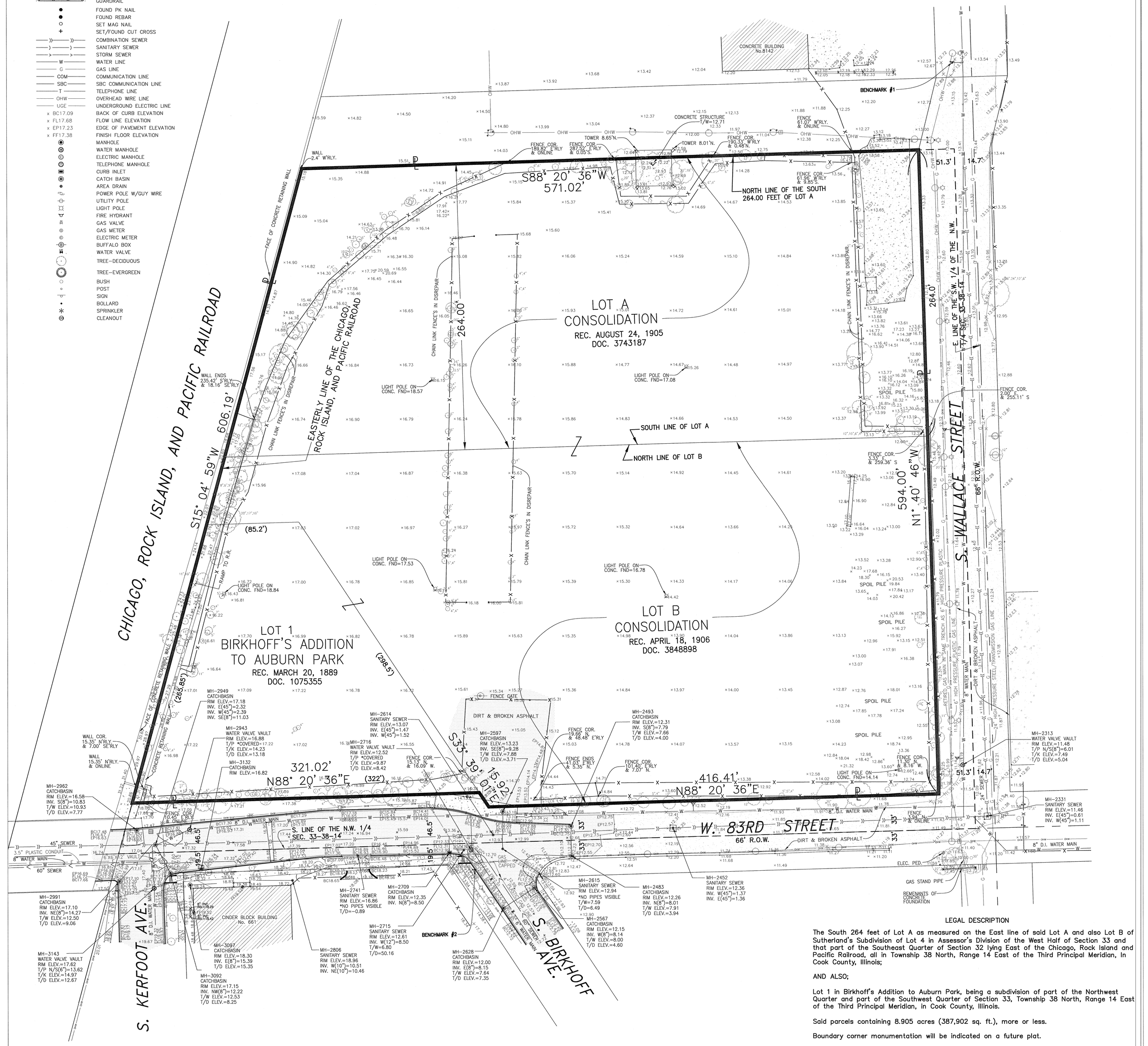

LEGAL DESCRIPTION

The South 264 feet of Lot A as measured on the East line of said Lot A and also Lot B of Sutherland's Subdivision of Lot 4 in Assessor's Division of the West Half of Section 33 and that part of the Southeast Quarter of Section 32 lying East of the Chicago, Rock Island and Pacific Railroad, all in Township 38 North, Range 14 East of the Third Principal Meridian, In Cook County, Illinois;

AND ALSO;

Lot 1 in Birkhoff's Addition to Auburn Park, being a subdivision of part of the Northwest Quarter and part of the Southwest Quarter of Section 33, Township 38 North, Range 14 East of the Third Principal Meridian, in Cook County, Illinois.

Said parcels containing 8.905 acres (387,902 sq. ft.), more or less.

Boundary corner monumentation will be indicated on a future plat.

Southerland's Subdivision could not be located, the survey is based on adjacent and supplemental information.

Bearings are assumed.

I further state that I have reviewed The Grant of Easement recorded as Document number 17429982 and have determined that it does not currently affect the above described property.

I further state that I have reviewed Document number 17844976 and have determined that it does not currently affect the above described property.

I further state that I have reviewed Document number 18075548 and have determined that it does not currently affect the above described property.

STATE OF ILLINOIS
COUNTY OF COOK

This is to certify that I, Thomas E. Baumgartner, a Illinois Professional Land Surveyor, have surveyed the property described in the caption above, and that this Professional service conforms to the current Illinois Minimum Standards for a Plat of Survey.

Given under my hand and seal in Chicago, Illinois, this 3rd day of December, 2018.

THOMAS E. BAUMGARTNER, ILLINOIS LAND SURVEYOR NO. 3142
LICENSE EXPIRATION 11-30-2020

Field work completed December 1, 2018.

PROFESSIONAL LAND SURVEYOR — THOMAS E. BAUMGARTNER 35-3142 CHICAGO — STATE OF ILLINOIS

NOTE: TERRA ENGINEERING does not guarantee the accuracy of this survey unless it contains an original seal and signature.

Source Benchmark: Chicago Benchmark No. 2733
South Halted Street and 84th Street (NE corner)
Mark cut on corner of stone water table at the Southwest corner of two story brick building (ice factory) B.M. is near the East line of South Halsted Street to the West.

Elevation = 21.120

Site Benchmark #1
Chain of bolt on Fire Hydrant located near the Northeast corner of 650 W. 83rd Street on West side of Wallace Street.

Elevation = 15.380

Site Benchmark #2
Top of chain bolt on Fire Hydrant located near Southwest corner of 650 W. 83rd Street and Birkhoff Ave.

Elevation = 13.885

I FURTHER STATE that the accompanying plat is a scaled representation of the physical situation which I found in the field and shows the location of visible evidence of utilities which I found at the time of my survey of these premises, and underground based on supplied plans. No attempt has been made as part of this survey to excavate, uncover or expose those facilities to field check the existence, size, depth, condition, capacity or exact location of those facilities. For more information concerning those utilities, please contact the appropriate public agencies or utility company.

Note: Fire Alarm & Police Telegraph Cable System Utility located adjacent to this property. See Drawing No. 35141 from City of Chicago—Department of Streets and Sanitation—Division of Electrical Engineering.

#	Date	Description
1	12-08-17	Issued
2	12-03-18	Updated the Plat

TERRA ENGINEERING LTD.
225 W. Ohio Street
4th Floor
Chicago, IL 60654
TEL: (312) 467-0123
FAX: (312) 467-0220
www.terraengineering.com

Project Information
PROJECT #: 15-194
DRAWN BY: NG
DESIGN BY: TB
CHECKED BY: TB

GREEN ERA
650 W. 83RD ST., CHICAGO IL

Dec 03, 2018 - 1:12pm
V:_2015\GREEN ERA 650 W. 83rd St.(15-194)\GREEN ERA(15-194-001)\SURVEY\GREEN ERA SURVEY 2017.DWG
TomB

ATTACHMENT 9
UTILITY RELATED DOCUMENTATION

PHASE I WATER FLOW REQUIREMENTS

	INTERMITTENT SERVICE	MAX FLOW REQ.		TOTAL USAGE IN 12 HR SHIFT
ITEM		GPM	GPH	GPD
1	BELT PRESS WASHBARS	80	4,800	4,800
2	POLYMER MAKEDOWN	50	3,000	13,500
3	SEPARATION MILLS /GRIT	20	1,200	7,200
4	WASHDOWN	75	4,500	6,000
	TOTAL	150	9,000	31,500

Notes:
1. One belt press. Wash bars run 5 mins per hour with fresh water, but may need longer cleaning cycles depending on belt requirements.
2. Polymer water fills tank through venturi nozzle
3. One mill. 10 GPM per press for packaging wash and grit wash
4. Wash down assumes use of one 75 GPM firehose nozzle for max case. Two garden hoses in use for typical requirement.
5. Install sufficient water capacity for future water flow requirements.

FUTURE WATER FLOW REQUIREMENTS

		Max	Typical
Item		GPM	GPM
1	Belt Presses (2)	160	80
2	Separation Mills /grit (2)	40	20
3	Polymer	50	50
4	Wash Down	75	10

Max instant flow demand	325	
Typical flow demand		160
Minimum Process Demand		20

Notes:
1. Two belt presses. Wash bars run 5 mins per hour with fresh water, but may need longer cleaning cycles depending on belt requirements
2. 2 mills. 10 GPM per press for packaging wash and grit wash
3. Polymer water fills tank through venturi nozzle
4. Wash down assumes use of one 75 GPM firehose nozzle for max case. Two garden hoses in use for typical requirement.

Belt presses may be operated independently of separation mills. Polymer make-down is intermittent usage during belt press operation, and doesn't necessarily coincide with the wash bars. Fires hose usage should be for maintenance cleaning only. Once/week for the receiving floor if needed and used during tank cleaning.

City water pressure is low, between 30 and 40 PSI. Use booster pump to deliver up to 85 PSI water for process connections, minimum of 60 PSI.

PHASE I INSTRUMENT AIR FLOW REQUIREMENTS

Description	**P&ID Name**	**PSIG**	**Volumetric Flow (CFM)**	
		P1	**Q1**	**Q2**
General plant, valves (high est)	-	85	3.5	2.5
Gas Upgrade (PSA skid)	-	100	17.7	14.5
Belt Press		85	4	2.9
Strain Press (screener) max.		125	1	1.0
				0.0
				0.0
				0.0
			Total	**20.9**

Example Equation
Q2 =(14.7+P1)*Q1/(14.7+P2)
momentary

MAX AIR DEMAND BY PROCESS STATED. AVERAGE CONSUMPTION WILL BE LOWER

w/o dryer 20.9

				CFM	
Diaphragm Pumps for intermittent maintenance use		0	30	3.2	usage based on 30 SCFM on SandPiper 2-inch, HD-20-F, 75 GPM at 15' HD - supply pressure regulated to 60 PSI

Kaeser SM 10 - compressor capacity	125	42	42.0	performance listed as CFM
Kaeser KADW50A (-40) - purged dryer consumption		12.44	12.4	stated as 10.2 *1.22 for SCFM
Total production per compressor			29.6	

Qty of compressors 2
Qty of dryers 1

AIR CONSUMPTION WILL BE MONITORED WITH A FLOW METER AND TRACKED ON THE SCADA TO IDENTIFY ANY SYSTEM AIR LOSSES DUE TO LEAKAGE.

NO.	DATE
BY	
REVISION	

NO.	DATE
BY	
REVISION	

NO.	DATE
BY	
REVISION	

GREEN ARROW
1680 MADISON AVENUE
WOOSTER, OH 44691

This drawing contains valuable confidential and proprietary information that belongs to Green Arrow ("GA"), and is subject to a Confidentiality and Nondisclosure Agreement. GA is the author and owner of this drawing, and retains all common law, statutory and other rights and privileges with respect hereto, including copyrights. The information contained herein may not at any time be used for any unauthorized purpose, nor reproduced by or provided to any third party, without the prior written consent of GA.

© 2017, Green Arrow.
All rights reserved.

MASS BALANCE
WATER AND AIR USAGE

AREA	CHECKED BY
	CH
JOB NO.	DRAWN BY
1512	NM
SCALE	DATE
N.T.S.	08/21/2021

DWG NO.
0001-009

SHEET NO.
9

City of Chicago
Department of Finance-Utility Billing
P.O. Box 6330
Chicago, Illinois 60680-6330

WATER, SEWER, GARBAGE, TAX BILL

Bill Date: Sep-27-2021

Potable Water

Customer: GREEN ERA 83RD ST LLC
Service Address: 650 W 83RD ST
Account Number: **1347789-699385**

Your Total Service Cost: **$251.78**

To Avoid Penalties, Pay By: **Oct-18-2021**

Pay online: **www.cityofchicago.org/finance**
Pay by mail: Send a check and the bottom portion of this page to the P.O. Box address listed at the top left corner
Pay over the phone: Call 312-744-4426
Pay in person: Visit Department of Finance Payment Centers or EZ Pay Stations

Metered Account Bill Summary

Bill Period: Jul-20-2021 - Sep-17-2021

Previous Balance	$6.00 CREDIT
Adjustments	$0.00
Payments	$0.00
Current Water	$98.77
Current Sewer	$98.77
Current Water-Sewer Tax	$60.24
Current Penalty	$0.00
TOTAL DUE	**$251.78**

AutoPay Amount $251.78

Additional Information

View your bills, sign up for paperless billing, enroll in a payment plan or AutoPay at: www.cityofchicago.org/finance. Please see the back of this bill for more details.

Need a Payment Plan?
Have a Question? Call 312-744-4426

You are enrolled in AutoPay, please see yellow highlighted details box below.

City of Chicago
Department of Finance-Utility Billing
P.O. Box 6330
Chicago, Illinois 60680-6330

Account:	Due Date:	Total Due:
1347789-699385	Oct-18-2021	AutoPay

Important! Make checks payable to City of Chicago - Utility Billing. Be sure to include your account number on check and include bottom portion of this bill with payment.

GREEN ERA 83RD ST LLC
JASON FELDMAN
218 N JEFFERSON ST
CHICAGO, IL 60661-1121

7300

You are enrolled in AutoPay. The total of current charges for Water, Sewer, Water-Sewer Tax, Garbage and Penalty is $251.78. This amount will be debited on Oct-18-2021. If you have a previous unpaid balance or a payment plan payment due, you must submit those payments separately.

10182021 00134778906993B5 6 0000025178 0000025178 3

Water and Sewer Metered Account Information

Effective June 1, 2021, the water rate is $30.79 per 1,000 cubic feet or approximately $4.13 per 1,000 gallons. You are a metered property and are billed based on the amount of water used in the billing period. The below detail provides total current water usage which is used to calculate the total current water charge reflected on the front of your bill. The sewer charge is 100 percent of your water charge.

YOUR METER READING DETAILS

1000 Cubic Feet = 7480 Gallons

METERED UNITS IN THOUSAND	READINGS PREVIOUS | CURRENT	USAGE IN THOUSANDS Cubic Feet = Gallons	ACTUAL or ESTIMATED READ
Gallons	3.0 | 27.0	3.2 = 24.0	Actual

Per the Municipal Code of Chicago, beginning June 1, 2016, and every year thereafter, the annual water rates shall be adjusted upwards, if applicable, by applying the previous year's rate of inflation. This increase is calculated based on the Consumer Price Index – Urban Wage Earners and Clerical Workers (Chicago All Items) published by the United States' Bureau of Labor Statistics for the 365-day period ending on the most recent January 1. Effective June 1, 2021, rates will increase by 1.10%.

Water-Sewer Tax

Effective January 1, 2020, the water-sewer tax assessment will increase to a rate of $2.51 per 1,000 gallons of water-sewer use. The revenue from this tax will be used to make certain mandated pension payments. This tax is charged to all non-exempt Chicago businesses and residences, and is billed as a separate line item on the front of this bill.

Garbage Fee

The garbage fee is charged to all properties that receive City of Chicago Department of Streets and Sanitation garbage collection service. The fee is $9.50 per month per dwelling unit.

Late Payment Penalty

A penalty accrues at a rate of 1.25 percent per month on late balances.

Senior Citizen Exemptions or Discounts

If you are 65 years of age or older, you may qualify for a sewer fee exemption or garbage fee discount. Please call Utility Billing Customer Service or visit the City of Chicago's website for more information.

Paying Your Utility Bill

- Pay online at www.cityofchicago.org/finance.
- Pay by mail to P.O. Box listed on the front of this bill.
- Pay by phone using the Interactive Voice Recognition (IVR) system by calling 312-744-4426.
- Pay in person at Department of Finance Payment Centers or EZ Pay Stations.

FOR MORE INFORMATION, call Utility Billing Customer Service at 312-744-4426 or visit www.cityofchicago.org/finance.

View your bills, sign up for paperless billing or enroll in AutoPay at www.cityofchicago.org/finance.

City of Chicago
Department of Finance-Utility Billing
P.O. Box 6330
Chicago, Illinois 60680-6330

WATER, SEWER, GARBAGE, TAX BILL

Bill Date: Sep-27-2021

Fire meter.

Customer: GREEN ERA 83RD ST LLC
Service Address: 650 W 83RD ST
Account Number: **1347789-699386**

Your Total Service Cost: **$6.00 CREDIT**

To Avoid Penalties, Pay By: **Oct-18-2021**

Pay online: **www.cityofchicago.org/finance**
Pay by mail: Send a check and the bottom portion of this page to the P.O. Box address listed at the top left corner
Pay over the phone: Call 312-744-4426
Pay in person: Visit Department of Finance Payment Centers or EZ Pay Stations

Metered Account Bill Summary

Bill Period: Jul-20-2021 - Sep-17-2021

Previous Balance	$6.00 CREDIT
Adjustments	$0.00
Payments	$0.00
Current Water	$0.00
Current Sewer	$0.00
Current Water-Sewer Tax	$0.00
Current Penalty	$0.00
TOTAL DUE	**$6.00 CREDIT**

Additional Information

View your bills, sign up for paperless billing, enroll in a payment plan or AutoPay at: www.cityofchicago.org/finance. Please see the back of this bill for more details.

Need a Payment Plan?
Have a Question? Call 312-744-4426

You have a credit balance on this bill. Please see additional details in stub below.

City of Chicago
Department of Finance-Utility Billing
P.O. Box 6330
Chicago, Illinois 60680-6330

Account:	Due Date:	Total Due:
1347789-699386	Oct-18-2021	$0.00

Important! Make checks payable to City of Chicago - Utility Billing. Be sure to include your account number on check and include bottom portion of this bill with payment.

This account currently has a credit balance. No payment is due at this time.

GREEN ERA 83RD ST LLC
JASON FELDMAN
218 N JEFFERSON ST
CHICAGO, IL 60661-1121

4066

10182021 00134778906799386 5 0000000600 0000000600 2

Water and Sewer Metered Account Information

Effective June 1, 2021, the water rate is $30.79 per 1,000 cubic feet or approximately $4.13 per 1,000 gallons. You are a metered property and are billed based on the amount of water used in the billing period. The below detail provides total current water usage which is used to calculate the total current water charge reflected on the front of your bill. The sewer charge is 100 percent of your water charge.

YOUR METER READING DETAILS

1000 Cubic Feet = 7480 Gallons

METERED UNITS IN THOUSAND	READINGS PREVIOUS | CURRENT	USAGE IN THOUSANDS Cubic Feet = Gallons	ACTUAL or ESTIMATED READ
Gallons	0.0 | 0.0	0.0 = 0.0	Actual

Per the Municipal Code of Chicago, beginning June 1, 2016, and every year thereafter, the annual water rates shall be adjusted upwards, if applicable, by applying the previous year's rate of inflation. This increase is calculated based on the Consumer Price Index – Urban Wage Earners and Clerical Workers (Chicago All Items) published by the United States' Bureau of Labor Statistics for the 365-day period ending on the most recent January 1. Effective June 1, 2021, rates will increase by 1.10%.

Water-Sewer Tax

Effective January 1, 2020, the water-sewer tax assessment will increase to a rate of $2.51 per 1,000 gallons of water-sewer use. The revenue from this tax will be used to make certain mandated pension payments. This tax is charged to all non-exempt Chicago businesses and residences, and is billed as a separate line item on the front of this bill.

Garbage Fee

The garbage fee is charged to all properties that receive City of Chicago Department of Streets and Sanitation garbage collection service. The fee is $9.50 per month per dwelling unit.

Late Payment Penalty

A penalty accrues at a rate of 1.25 percent per month on late balances.

Senior Citizen Exemptions or Discounts

If you are 65 years of age or older, you may qualify for a sewer fee exemption or garbage fee discount. Please call Utility Billing Customer Service or visit the City of Chicago's website for more information.

Paying Your Utility Bill

- Pay online at www.cityofchicago.org/finance.
- Pay by mail to P.O. Box listed on the front of this bill.
- Pay by phone using the Interactive Voice Recognition (IVR) system by calling 312-744-4426.
- Pay in person at Department of Finance Payment Centers or EZ Pay Stations.

FOR MORE INFORMATION, call Utility Billing Customer Service at 312-744-4426 or visit www.cityofchicago.org/finance.

View your bills, sign up for paperless billing or enroll in AutoPay at www.cityofchicago.org/finance.

Customer Service	866-556-6001
24-Hour Gas Emergencies	866-556-6002
En Espanol	866-556-6003
TDD Line	866-556-6007

Bill Date	Account Number	Next Meter Read Date	Amount Due	Payment Due Date
10/26/2021	0622988191-00001	11/22/2021	$778.96	11/09/2021

Customer Name GREEN ERA 83RD STREET, LLC
Service Address 650 W 83RD ST
CHICAGO IL 60620-1937

Activity Since Last Bill

Balance	$0.00
Total Current Charges	$778.96
Total Current Balance	$778.96

Gas Service

Rate 2 - Gen Svc Mtr Class 3 Heating

Meter 2107090925	Actual Reading 10/21/2021	3
	Set Reading 09/08/2021	-1
	Total Gas Use	2 CCF
Meter P3272589	Remove Reading 09/08/2021	1
	Start Reading 09/07/2021	-1
	Total Gas Use	0 CCF

2 CCF x 1.051 BTU = 2.1 Therms

Delivery Charges		
Customer Charge		$522.85
Under 5000 Therms	2.1 Therms at $0.16289	$0.34
Storage Service Charge	2.1 Therms at $0.03802	$0.08
Gas Charge	2.1 Therms at $0.69220	$1.45
Energy Efficiency Program	2.1 Therms at $0.03070	$0.06
Environmental Charge	2.1 Therms at $0.011304	$0.02
UEA - Gas Cost Adjustment	1.23% of $1.45	$0.02
Volume Balancing Adjustment	2.1 Therms at $0.00390	$0.01
Tax Cost Adjustment		-$0.02
Qualified Infrastructure Plant Charge	33.39% of $512.57	$171.15
Taxes		
Chicago Municipal Tax	8.24% of $695.96	$57.35
State Tax	0.1% of $695.96	$0.70
State Gas Revenue Tax	2.1 Therms at $0.024000	$0.05
	Subtotal:	**$754.06**
	Gas Service Total:	**$754.06**

Other Charges/Credits

Svc Activation Chg - Meter Reading Taken

Current Charges		
Service Activation Charge		$23.00
Taxes		
Chicago Municipal Tax	8.24% of $23.00	$1.90
	Subtotal:	**$24.90**
	Other Charges/Credits Total:	**$24.90**

Account Summary
Bill Period: 09/07/2021 to 10/21/2021

	Oct 2021
Billing Days	44
Avg Temp	69°F
Heating Deg Days	70
Cooling Deg Days	180
Therms Used	2.1
Avg Therms / Day	0
Utility Gas Cost	$0.73

Graphs

Usage by Month

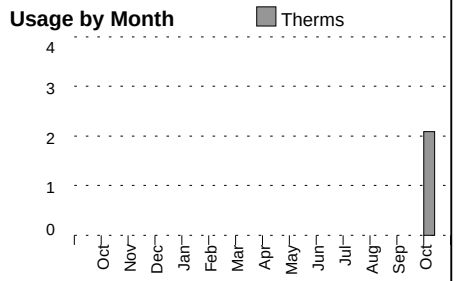

Charges by Month

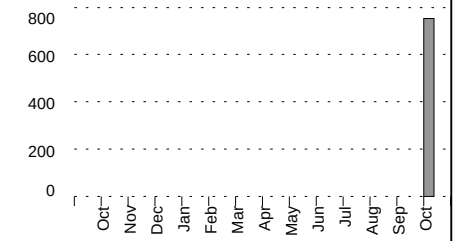

PEOPLES GAS®

Please return this stub with your payment.

ACCOUNT NUMBER: 0622988191-00001

Amount Due By 11/09/2021 $778.96

A 1.5% late fee may be charged on any unpaid balance

Please write your account number on your check

Amount Enclosed

GREEN ERA 83RD STREET, LLC
STE 300
218 N JEFFERSON ST
CHICAGO IL 60661

☐ I want to pledge $1 per month to the Share the Warmth program, which helps pay energy expenses for those in need. **I've added $1 to my payment.**

Peoples Gas
PO Box 6050
Carol Stream IL 60197-6050

01506229881910000014 9000077896

Customer Service	866-556-6001
24-Hour Gas Emergencies	866-556-6002
En Espanol	866-556-6003
TDD Line	866-556-6007

Bill Date	Account Number	Next Meter Read Date	Amount Due	Payment Due Date
10/26/2021	0622988191-00001	11/22/2021	$778.96	11/09/2021

Messages

View your bill online anytime in My Account. Visit our website to sign up.

Your bill reflects a credit, effective May 1, 2018, due to the decrease in the federal tax rate. The credit is labeled Tax Cost Adjustment.

We continue to closely monitor the situation surrounding COVID-19. As an essential service provider, we are committed to the safety of our employees and customers while providing the energy you depend on. Visit peoplesgasdelivery.com to learn more.

Account Summary
Bill Period: 09/07/2021 to 10/21/2021

	Oct 2021		
Billing Days	44		
Avg Temp	69°F		
Heating Deg Days	70		
Cooling Deg Days	180		
Therms Used	2.1		
Avg Therms / Day	0		
Utility Gas Cost	$0.73	$0.00	$0.00

Graphs

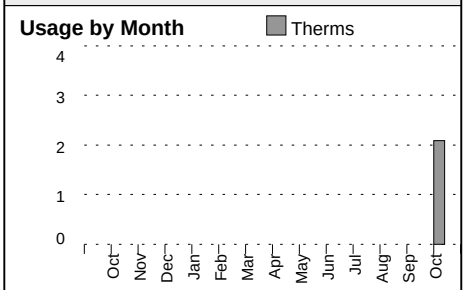

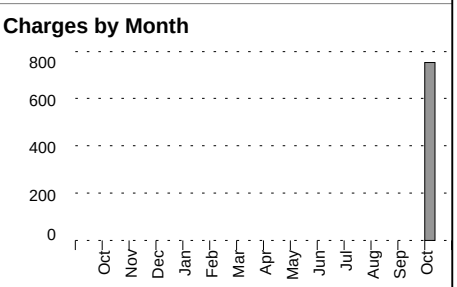

ComEd
An Exelon Company

Account Number 8944108032

Name GREEN ERA 83RD STREET LLC
Service Location 650 W 83RD ST CHICAGO
Phone Number 312-544-9218

Bill Summary

Previous Balance	$0.00
Total Payments	$0.00
No Payment is Due	**$0.00**

Issue Date October 29, 2021

Visit ComEd.com

Customer Service / Power Outage
English
1.877.4COMED1 (1.877.426.6331)
Español
1.800.95.LUCES (1.800.955.8237)
Hearing/Speech Impaired
1.800.572.5789 (TTY)

Your Usage Profile
13-Month Usage (Total kWh)

* Non-regular billing period

Electric Usage

Month	kWh
Oct-21	4139
Nov-21	**8538**

Month Billed	Average Daily kWh	Temp
Last Year	0.0	0
Last Month	197.1	69
Current Month	**304.9**	**60**

Meter Information

Read Dates	Meter Number	Load Type	Reading Type	Meter Reading Previous	Meter Reading Present	Difference	Multiplier X	Usage
10/1-10/29	230013646	General Service	Total kWh	Actual	Actual			0
10/1-10/29	230013646	General Service	On Pk kW	Actual	Actual			0.00
10/1-10/29	230034663	General Service	Total kWh	Actual	Actual			8538
10/1-10/29	230034663	General Service	On Pk kW	Actual	Actual			101.16

Service from 10/1/2021 to 10/29/2021 - 28 Days **Commercial Demand - 0 to 100 kW**

Electricity Supply Services $628.99

Electricity Supply Charge	8,538 kWh	X	0.06517	556.42
Transmission Services Charge	8,538 kWh	X	0.01350	115.26
Purchased Electricity Adjustment				-42.69

Delivery Services - ComEd $850.36

Customer Charge				17.68
Standard Metering Charge				6.70
Distribution Facilities Charge	101.16 kW	X	7.92000	801.19
IL Electricity Distribution Charge	8,538 kWh	X	0.00122	10.42
Meter Lease				14.37

Taxes and Other $157.30

Environmental Cost Recovery Adj	8,538 kWh	X	0.00022	1.88
Renewable Portfolio Standard	8,538 kWh	X	0.00189	16.14
Zero Emission Standard	8,538 kWh	X	0.00195	16.65

For Electric Supply Choices visit pluginillinois.org

(continued on next page)

Return only this portion with your check made payable to ComEd. Please write your account number on your check.

ComEd
An Exelon Company

To pay by phone call 1-800-588-9477.
A convenience fee will apply.

0000019 01 SP 1.160 **SNGLP T1 1 1217 60661-130775 -C72-B1-P00000-I

Account Number
8944108032

Payment Amount

GREEN ERA 83RD STREET LLC
SUITE 300
218 N JEFFERSON ST
CHICAGO, IL 60661-1307

Please pay this amount by 11/17/2021 **$0.00**

COMED
PO BOX 6111
CAROL STREAM, IL 60197-6111

8944108032000000000013210000004

1217-72-0000019-0001-0000023

Energy Efficiency Programs	8,538 kWh	X	0.00260	22.20
Franchise Cost				33.48
State Tax				27.46
Municipal Tax				39.49

Total Current Charges **$1,636.65**

Miscellaneous **-$41,196.95**

Overpayment	-41,196.95

Your remaining excess credit is $43,173.66

Total Amount Due **$0.00**

Message Center

ComEd

- PRICE TO COMPARE: The ComEd electric supply price to compare is 7.867 cents per kWh. This price does not include a monthly purchased electricity adjustment factor that may range between +$0.005 and -$0.005 per kWh. For more information and supplier offers visit https://www.pluginillinois.org/fixedrate.aspx. For more information on ComEd bill line items go to ComEd.com/UnderstandBill.
- WAYS TO PAY: Looking for ways to pay your bill? Visit ComEd.com/PAY
- STOP ENERGY SCAMS: Scammers may threaten to disconnect service in exchange for immediate payment or personal information. We will never demand payment using prepaid cash cards, third-party banking apps, or cryptocurrency such as Bitcoin. Learn more: ComEd.com/ScamAlert.
- RESOLVING DISPUTES: The Illinois Commerce Commission Consumer Division is available at 800-524-0795 to help resolve disputes with ComEd. However, customers should contact ComEd before seeking assistance from the ICC.
- Credit balance - do not pay.

1217-72-0000019-0001-0000023

10% total recycled fiber

CME906R 03/10

When you provide a check as payment, you authorize us to use information from your check either to make a one-time electronic fund transfer from your account or to process the payment as a check transaction.

COMCAST BUSINESS

Account Number	Billing Date	Services From	Page
8771 30 032 2632898	Nov 27, 2021	Dec 01, 2021 to Dec 31, 2021	1 of 3

Hello Green Arrow Sustainability,

Thanks for choosing Comcast Business.

Your bill at a glance

For 650 W 83RD ST OFC 2, CHICAGO, IL, 60620-1937

Previous balance		$123.98
Credit card payment - thank you	Nov 23	-$123.98
Balance forward		**$0.00**
Regular monthly charges	Page 3	$115.00
Taxes, fees and other charges	Page 3	$8.98
New charges		**$123.98**
Amount due		**$123.98**

Thanks for paying by Automatic Payment

Your credit card payment of $123.98 will be applied on Dec 22, 2021.

Need help?

Visit business.comcast.com/help or see page 2 for other ways to contact us.

Your bill explained

- This page gives you a quick summary of your monthly bill. A detailed breakdown of your charges begins on page 3.

Detach the bottom portion of this bill and enclose with your payment

Please write your account number on your check or money order

Do not include correspondence with payment

COMCAST BUSINESS
P O BOX 4928 OAK
BROOK IL 60522-4928

GREEN ARROW SUSTAINABILITY
ATTN CHRISTOPHER YOAKUM
650 W 83RD ST
CHICAGO, IL 60620-1937

Account number	**8771 30 032 2632898**
Automatic payment	Dec 22, 2021
Please pay	**$123.98**

Credit card payment will be applied Dec 22, 2021

COMCAST
PO BOX 70219
PHILADELPHIA PA 19176-0219

8771300322632898001239 84

Download the Comcast Business App

Manage your account anytime, anywhere with the Comcast Business App – an innovative all-in-one tool designed with your business in mind.

- Manage your account details
- Pay your bill and customize billing options
- View upcoming appointments

Faster speeds. More solutions. Bigger savings.

Comcast Business now offers **NEW** packages with faster speeds and innovative Voice and security solutions – at a better value.

Call today for a FREE account review at 877-564-0318.

Need help? We're here for you

Visit us online
Get help and support at
business.comcast.com/help

Call us anytime
800-391-3000
Open 24 hours, 7 days a week for billing and technical support

Useful information

Moving?
We can help ensure it's a smooth transition.
Visit **business.comcast.com/learn/moving** to learn more.

Accessibility:
If you are hearing impaired, call 711. For issues affecting customers with disabilities, call **1-855-270-0379**, chat live at **support.xfinity.com/accessibility**, email **accessibility@comcast.com**, fax **1-866-599-4268** or write to Comcast at 1701 JFK Blvd., Philadelphia, PA 19103-2838 Attn: M. Gifford.

Ways to pay

No more mailing monthly checks
Set up Auto Pay to save time, energy and stamps. It's easy to enroll, just visit
business.comcast.com/myaccount

Go paperless and say goodbye to clutter
Sign up for Paperless Billing to view and pay your bill online. It's faster, easier and helps cuts down on clutter. Visit **business.comcast.com/myaccount** to get started.

Additional billing information

More ways to pay:

Online
Visit My Account at **business.comcast.com/myaccount**

By App
Download the Comcast Business App

In-Store
Visit **business.comcast.com/servicecenter**
to find a store near you

Regular monthly charges $115.00

Comcast Business $110.00

Packaged services		**$355.00**
Data, Voice Secure Pack Package Includes: Business Internet 200, Securityedge, Connection Pro, 1 Mobility Voice Line, and Equipment Fees.	$355.00	
Discounts		**-$245.00**
Promotional Discount	-$235.00	
Ecobill/autopay Discount	-$10.00	

Service fees $5.00

Directory Listing Management Fee	$2.00	
Voice Network Investment	$3.00	

Taxes, fees and other charges $8.98

Other charges $1.02

Maintenance Fee	$0.08	
Federal Universal Service Fund	$0.30	
Regulatory Cost Recovery	$0.64	

Taxes & government fees $7.96

Rental Tax	$0.72	
State & Local Excise Tax	$2.24	
911 Fees	$5.00	

What's included?

Internet: Fast, reliable internet on our Gig-speed network

Voice Numbers: (773)675-4313

Visit **business.comcast.com/myaccount** for more details

You've saved $245.00 this month with your promotional and ecobill/autopay discounts.

Additional information

Local Unit of Government: City of Chicago, Dept of Business Affairs and Consumer Protection 121 N LaSalle St., Room 805, Chicago, IL 60602 Customers may contact the City at 311 or 312-744-6060 regarding cable complaints. FCC IDs: IL1104, IL0985, IL0984, IL0955 and IL1105

The Regulatory Cost Recovery fee is neither government mandated nor a tax, but is assessed by Comcast to recover certain federal, state, and local regulatory costs.

ATTACHMENT 10
EQUIPMENT SPECIFICATIONS

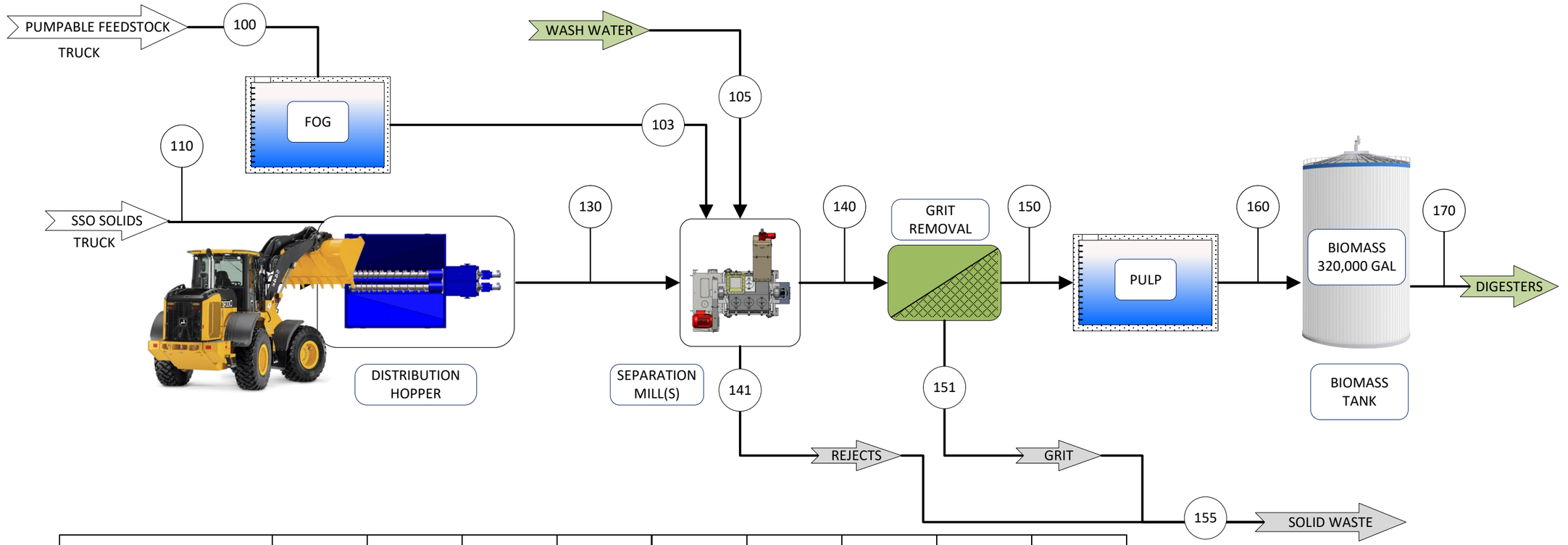

	PUMPABLE FEEDSTOCKS	WASH WATER	LIVE BOTTOM HOPPER	SEPARATION MILL ORGANIC	SEPARATION MILL REJECT	GRIT TANK ORGANIC	GRIT TANK REJECT	TOTAL SOLID WASTE	BIOMASS TANK
BALANCE POINT ID	**100**	**105**	**110 & 130**	**140**	**141**	**150**	**151**	**155**	**160 & 170**
STORAGE VOL. (CY)			90						
STORAGE VOL. (GAL)	60,000					5,000			320,000
TONS PER YEAR	26,776	9,125	50,005	83,406	2,500	82,406	1,000	3,500	82,406
TONS PER DAY_5	103	35	192	320	10	316	3.8	13	316
TONS PER DAY_7	73	25	137	229	6.9	226	2.74	9.6	226
TONS PER $HOUR_{5/16}$	6	2	12.0	20	0.6	20	0.2	1	20
YARDS PER YEAR			117,659		41,671		1,111	20,002	
YARDS PER DAY_5			451		159.8		4.3	77	
YARDS PER DAY_7			322		114		3.0	55	
YARDS PER $HOUR_{5/16}$			28		10.0		0.3	4.8	
GALLONS PER YEAR	6,421,103	2,188,249		20,097,771		19,856,783			19,856,783
GALLONS PER DAY_5	24,629	8,393		76,718		75,798			75,798
GALLONS PER DAY_7	17,592	5,995		55,062		54,402			54,402
GALLONS PER $HOUR_{5/16}$	1,539	525		4,795		4,737			4,737
TOTAL SOLIDS (%)	3%	1%	22.5%	13.8%		13.8%			13.8%

100 - PUMPABLE FEEDSTOCK REQUIRED FOR DILUTION OF SSO; 8.34 LBS/GAL

105 - WASH WATER, 12 HOURS @ 6 GPM FOR WB MILLS, PLUS 2,000 GPD GENERAL CLEANUP

110 - 1 LIVE BOTTOM FEEDER, 90 CY , 8' WIDE X 25' LG X 8' HIGH, SSO DENSITY 850 LBS/CY

130 - AVG. 28 CY/HR PER SEPARATION MILL; 12 TONS/HR, 850 LBS/CY

140 - 7.0% AVERAGE NON-ORGANIC CONTAMINATION FOR INCOMING SSO, (3,500 TPY / 50,005 TPY)

141 - REJECT DENSITY, 120 LBS/CY

151 - GRIT PERCENT OF INCOMING BY WEIGHT, 2.0%; DENSITY 1800 LBS/CY

155 - COMPACTED WASTE DENSITY 300 - 400 LBS/CY USING AUGER TYPE COMPACTOR

5 DAY WEEK BASIS -> 250 DAYS/YR
7 DAY WEEK BASIS -> 365 DAYS/YR
16 HOUR PROCESSING – 5 DAYS PER WEEK

100+105+110 = 140 +141 +151

NO.	DATE
BY	
REVISION	
B	08/21/2021
BY: NMAST	
REVISION: REVISE TABLE TO REFERENCE CALCULATION WORKSHEET, DWG SHT 5&6	
A	03/20/2018
BY: NMAST	
REVISION: UPDATED MASS BALANCE TABLE INPUTS 100 TPY (26,776 WAS 43,800); 105 (3,825 WAS 9,125); 141, REJECT DENSITY CHG. TO 120 LBS/CY FROM 500	

GREEN ARROW

1680 MADISON AVENUE
WOOSTER, OH 44691

This drawing contains valuable confidential and proprietary information that belongs to Green Arrow ("GA"), and is subject to a Confidentiality and Nondisclosure Agreement. GA is the author and owner of this drawing, and retains all common law, statutory and other rights and privileges with respect hereto, including copyrights. The information contained herein may not at any time be used for any unauthorized purpose, nor reproduced by or provided to any third party, without the prior written consent of GA.

© 2017, Green Arrow.
All rights reserved.

MASS BALANCE
FEEDSTOCK PROCESSING

AREA	CHECKED BY: CH
JOB NO.: 1512	DRAWN BY: NM
SCALE: N.T.S.	DATE: 01/20/2016
DWG NO.: 0001-001	
SHEET NO.: 1	

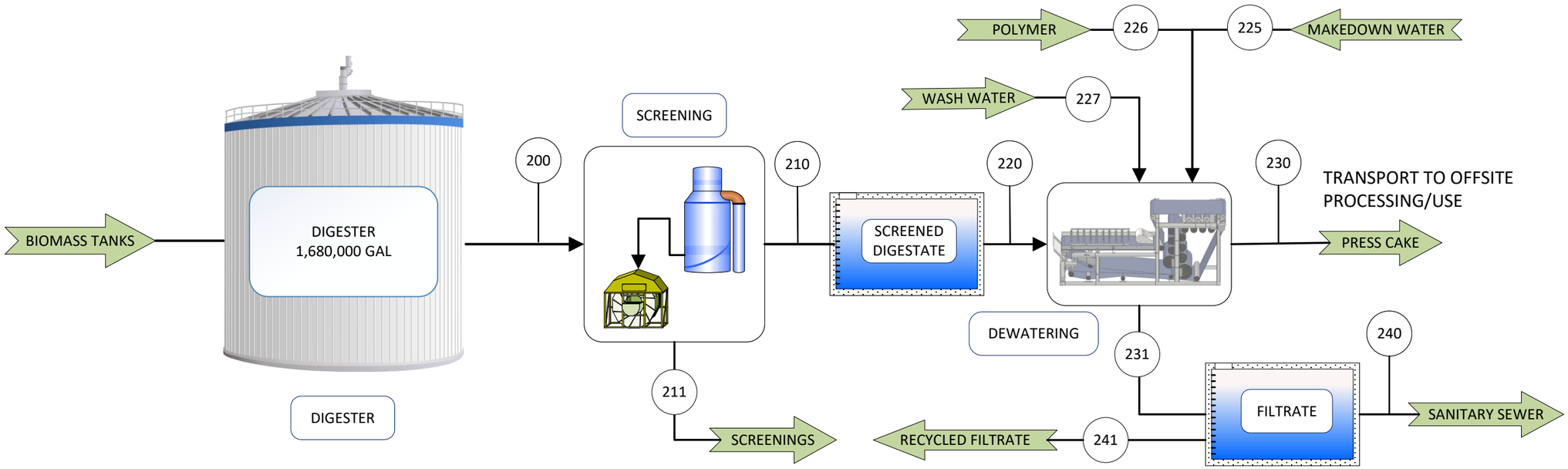

200 DIGESTATE AT 3.9% TOTAL SOLIDS, USING VARIABLE STORAGE VOLUME IN DIGESTER FOR EFFLUENT STORAGE. WILL OPERATE AT A MIN. VOL. OF 1.5 MGAL UP TO 1.68 MGAL WITH 3-FT FREEBOARD. 29 DAY HRT @ 1.5 MGAL.

211 SCREENINGS PRIMARILY PLASTICS, PARTICLE SIZE 3/16" AND OVER, 0.5% BY WEIGHT OF DIGESTATE. WILL BE COMBINED WITH OTHER SEPARATED RESIDUAL TO THE COMPACTOR

220 ONE 2 M BELT PRESS, 9 HR/DAY, 7 DAY/WK OR 13 HR/DAY, 5 DAY/WK

225 FRESH WATER USED FOR POLYMER MAKEDOWN

226 POLYMER USAGE 18 LBS 100% ACTIVE POLYMER PER TON OF DRY SOLIDS, TON USAGE AND GALLONS BASED ON 40% ACTIVE EMULSION PRODUCT

227 5 MIN/HR CIP CYCLE FOR BELTS

231 CAKE SLUDGE AT 25% TOTAL SOLIDS; 1.25 CY/TON = 60 LBS/CF

240 FILTRATE PUMPED TO SANITARY SEWER (MWRD)

241 FILTRATE MAY BE RECYCLED BACK TO THE FRONT OF THE PLANT TO REDUCE THE TOTAL SOLIDS OF THE BLENDED FEEDSTOCK

	EFFLUENT	SCREENED DIGESTATE	SCREENED SOLIDS	PRESS FEED	POLYMER MAKEDOWN	POLYMER EMULSION	BELT WASH WATER	PRESS CAKE	FILTRATE	SANITARY SEWER	RECYCLED FILTRATE
BALANCE POINT ID	**200**	**210**	**211**	**220**	**225**	**226**	**227**	**230**	**231**	**240**	**241**
STORAGE VOL. (GAL)	180,000			30,000	2,000	1,000			60,000		
TONS PER YEAR	82,406	81,994	412	81,994	15,938	71	5,479	12,750	90,661	90,661	
TONS PER DAY_5	316	314	1.6	314	61.1	0.3	21.0	49	347.7	347.7	
TONS PER DAY_7	226	225	1.1	225	43.7	0.2	15.0	35	248.4	248.4	
TONS PER WEEK	1,580	1,577	3.6	1,577	306	1.4	105	245	1,739	1,739	
YARDS PER YEAR			1,177					15,938			
YARDS PER DAY_5			4.7					61			
YARDS PER DAY_7			3.2					44			
YARDS PER WEEK			23					306			
GALLONS PER YEAR	19,761,547	19,662,739		19,662,739	3,822,016	18,750	1,314,000		21,741,142	21,741,142	VARIABLE
GALLONS PER DAY_5	75,798	75,419		75,419	14,660	72	5,040		83,391	83,391	VARIABLE
GALLONS PER DAY_7	54,141	53,871		53,871	10,471	51	3,600		59,565	59,565	VARIABLE
GALLONS PER WEEK	378,989	377,094		377,094	73,299	360	25,200		416,953	416,953	VARIABLE
TOTAL SOLIDS (%)	3.9%	3.9%		3.9%				25%	0.20%	0.20%	

NO.	DATE
BY	
REVISION	
NO. B	DATE 08/23/2021
BY	
REVISION: REVISE TABLE TO REFERENCE CALCULATION WORKSHEET, DWG SHT 5&6	
NO. A	DATE 03/20/2018
BY: NMAST	
REVISION: REDUCED DIGESTER VOL. TO 1.7 MGAL FROM 2.0 MGAL. TABLE RECALC. PER SHT. 1	

GREEN ARROW

1680 MADISON AVENUE
WOOSTER, OH 44691

This drawing contains valuable confidential and proprietary information that belongs to Green Arrow ("GA"), and is subject to a Confidentiality and Nondisclosure Agreement. GA is the author and owner of this drawing, and retains all common law, statutory and other rights and privileges with respect hereto, including copyrights. The information contained herein may not at any time be used for any unauthorized purpose, nor reproduced by or provided to any third party, without the prior written consent of GA.

© 2017, Green Arrow.
All rights reserved.

MASS BALANCE
DIGESTATE POST-TREATMENT

AREA	CHECKED BY: CH
JOB NO. 1512	DRAWN BY: NM
SCALE N.T.S.	DATE 01/20/2016
DWG NO. 0001-002	
SHEET NO. 2	

INTENTIONALLY BLANK

RESERVED FOR FUTURE USE

NO.	DATE
BY	
REVISION	

NO.	DATE
BY	
REVISION	

NO.	DATE
A	03/20/18

BY
NMAST

REVISION
SHEET REDRAWN. REMOVED ONSITE CAKE SOLIDS PROCESSING.

GREEN ARROW

1680 MADISON AVENUE
WOOSTER, OH 44691

This drawing contains valuable confidential and proprietary information that belongs to Green Arrow ("GA"), and is subject to a Confidentiality and Nondisclosure Agreement. GA is the author and owner of this drawing, and retains all common law, statutory and other rights and privileges with respect hereto, including copyrights. The information contained herein may not at any time be used for any unauthorized purpose, nor reproduced by or provided to any third party, without the prior written consent of GA.

© 2017, Green Arrow.
All rights reserved.

MASS BALANCE
CAKE SOLIDS BLENDING

AREA	CHECKED BY
	CH
JOB NO.	DRAWN BY
1512	NM
SCALE	DATE
N.T.S.	01/20/2016

DWG NO.
0001-003

SHEET NO.
3

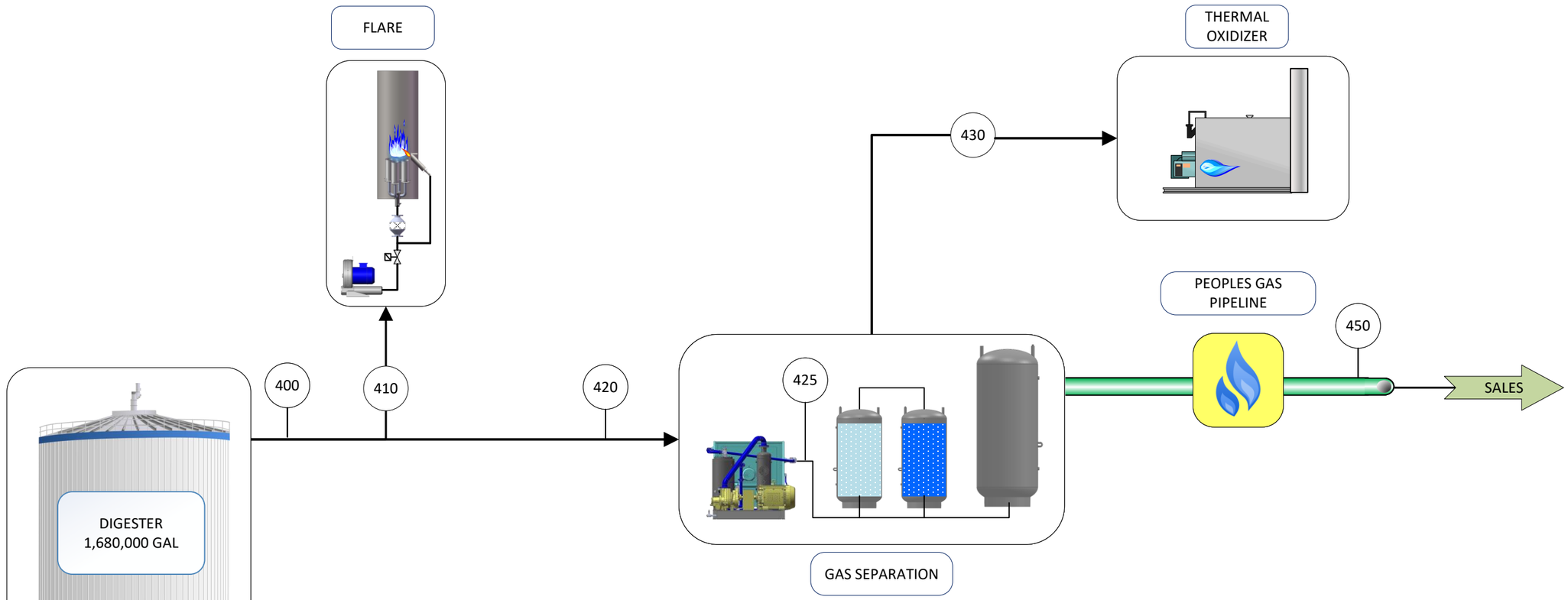

DIGESTER

	DIGESTER	FLARE	COMP. INLET	DRY INLET	TAIL GAS	PRODUCT GAS
BALANCE POINT ID*	**400**	**410**	**420**	**425**	**430**	**450**
SCF PER MINUTE	494	800	400	381	155	226
SCF PER HOUR	29,628	48,000	24,000	22,860	9,300	13,560
MSCF PER DAY	711	1,152	576	549	223	325
MSCF PER YEAR	259,542		210,240	200,254	81,468	118,786
BTU/SCF	600	600	600	630	127	985
MMBTU PER HOUR	17.8	29	14	14	1.2	13
MMBTU PER YEAR	155,725		126,144	126,144	10,346	117,004
PSIG	0.21	0.14	0.14	100	2	160

* GAS USE EQUIPMENT DESIGN OPERATING CAPACITIES ARE STATED. BIOGAS MAY BE DIRECTED TO THE GAS UPGRADE EQUIPMENT OR THE FLARE. THE FLARE AND GAS UPGRADING EQUIPMENT ARE DESIGNED TO OPERATE AT REDUCED FLOW RATES TO MATCH BIOGAS PRODUCTION RATES. BIOGAS USAGE WILL BE MANAGED AUTOMATICALLY BY THE SCADA WITH OPERATOR INPUT.

400 BIOGAS PRODUCTION AT FULL ORGANIC LOADING RATES; 50,005 TPY ORGANICS, 26,776 TPY FOG, 80% COD DESTRUCTION AND 350 LITERS CH4 PER KG-COD DESTORYED

410 MAX VOLUMETRIC CAPACITY FOR 1 FLARE SHOWN; WILL OPERATE AS A BACK-UP EMISSION CONTROL DEVICE IF OTHER GAS USE EQUIPMENT IS UNAVAILABLE.

420 VOL. CAPACITY OF GAS UPGRADE SKID STATED FOR FULLY SATURATED GAS.

425 VOL. AFTER COMPRESSION AND CONDENSATE KNOCK-OUT

430 TAIL GAS QUAL. VARIABLE DEPENDANT ON INPUT GAS QUALITY AND SYSTEM THROUGHPUT, LOW OF 100 BTU/SCF UP TO 200 BTU/SCF.

430/450 GAS RECOVERY BASED ON 60% METHANE IN BIOGAS. RECOVERY RATES BASED ON MFG. DATA. SEE GUILD PSA MASS BAL. 160 PSIG IS THE REGULATED PIPELINE PRESSURE.

NO.	DATE
BY	
REVISION	
NO. B	DATE 08/21/21
BY NMAST	
REVISION: REMOVED BOILERS. UPDATED CAPACITIES TO MFG. DATA. TABLE VALUES UPDATED TO CALCULATION WORKSHEET, DWG SHT 5&6	
NO. A	DATE 03/20/18
BY NMAST	
REVISION: TABLE RECALC. PER SHT. 1. REPLACED CHP WITH GAS UPGRADE	

GREEN ARROW

1680 MADISON AVENUE
WOOSTER, OH 44691

This drawing contains valuable confidential and proprietary information that belongs to Green Arrow ("GA"), and is subject to a Confidentiality and Nondisclosure Agreement. GA is the author and owner of this drawing, and retains all common law, statutory and other rights and privileges with respect hereto, including copyrights. The information contained herein may not at any time be used for any unauthorized purpose, nor reproduced by or provided to any third party, without the prior written consent of GA.

© 2017, Green Arrow. All rights reserved.

MASS BALANCE
BIOGAS

AREA	CHECKED BY CH
JOB NO. 1512	DRAWN BY NM
SCALE N.T.S.	DATE 01/20/2016
DWG NO. 0001-004	
SHEET NO. 4	

Determine the resultant total solids in the feedstock and the digestate given feedstock inputs
SSO Food waste

Calculate non-digestable fraction

1 | 50,005 tons/y | x | 7.0 % Contamination | = | 3,500 tons/y contamination (includes grit)

Organic Yield, wet weight

2 | 50,005 tons/y | - | 3,500 tons/y contamination | = | 46,505 tons/y organic

Calculate tons of total solids in organic fraction, dry basis

3 | 46,505 tons/y organic | x | 22.5 % TS (range from 20 to 25%) | = | 10,464 dry tons/y

Calculate tons of volatile solids in organic fraction, dry basis

4 | 10,464 dry tons/y | x | 90 % VS | = | 9,417 dry tons/y

Pumpable Organic Waste
assume negligible contamination

Calculate tons of total solids in organic fraction, dry basis

5 | 26,776 tons/y | x | 3 % TS | = | 803 dry tons/y

Calculate tons of volatile solids in organic fraction, dry basis

6 | 803 dry tons/y | x | 90 % VS | = | 723 dry tons/y

Filtrate Recycle
assume no contamination,
No filtrate recycle is needed at the assumed ratio of pumpable waste to SSO
Calculate tons of total solids in organic fraction, dry basis

7 | - tons/y | x | 0.1 % TS | = | - dry tons/y

Calculate tons of volatile solids in organic fraction, dry basis

8 | - dry tons/y | x | 10 % VS | = | - dry tons/y

Wash water
assume no contamination

Calculate tons of total solids in organic fraction, dry basis

9 | 9,125 tons/y | x | 1 % TS | = | 91 dry tons/y

Calculate tons of volatile solids in organic fraction, dry basis

10 | 91 dry tons/y | x | 80 % VS | = | 73 dry tons/y

	Total Wet Tons Per Year		Total Wet Tons Per Day (365)
	46,505 tons/y SSO		127 tons/d SSO
	26,776 tons/y FOG		73 tons/d FOG
	- tons/y filtrate		- tons/d concentrate
	+ 9,125 tons/y wash water		+ 25 tons/d wash water
11	82,406 wet tons/y organic		226 wet tons/d organic

	Total Dry Tons Per Year		Total Dry Tons Per Day (365)
	10,464 tons/y SSO		29 tons/d SSO
	803 tons/y FOG		2.2 tons/d FOG
	- tons/y filtrate		- tons/d concentrate
	+ 91 tons/y wash water		+ 0.3 tons/d wash water
12	11,358 dry tons/y		31 dry tons/d

	Total Tons Volatile Solids Per Year		Total Tons Volatile Solids Per Day (365)
	9,417 tons/y SSO		26 tons/d SSO
	723 tons/y FOG		2.0 tons/d FOG
	- tons/y filtrate		- tons/d concentrate
	+ 73 tons/y wash water		+ 0.2 tons/d wash water
13	10,213 dry tons/y volatile solids		28 dry tons/d volatile solids

Calculate the pounds of feedstock per day

14 | 82,406 wet tons/y | x | 2000 lbs/ton | / | 365 d/y | = | 451,538
from eq.

Calculate the annual volume of feedstock.

15 | 82,406 wet tons/y | x | 2000 lbs/ton | / | 8.34 lbs/gal | = | 19,761,547
from eq. 11
Calculate the daily volume of feedstock (365 basis)

16 | 19,761,547 gal/y | / | 365 d/y | = | 54,141 gal/day

Calculate the mass of screenings removed from the digestate

17 | 82,406 wet tons/y | x | 0.5 % weight | = | 412 tons/y screenings

Calculate mass of digestate to dewatering after screening

18 | 82,406 wet tons/y | - | 412 wet tons/y screened | = | 81,994 wet tons/y

Calculate the annual volume of digestate to dewatering

19 | 81,994 wet tons/y | x | 2000 lbs/ton | / | 8.34 lbs/gal | = | 19,662,739
from eq. 15
Calculate the daily volume of digestate to dewatering (365 basis)

20 | 19,662,739 gal/y | / | 365 d/y | = | 53,871 gal/day

Calculate the percent total solids in the blended feedstock

21 | 11,358 dry tons/y | / | 82,406 wet tons/y organic | = | 13.8% percent total solids

Calculation the tons of non-digestable solids, ash (tons[TS] - tons[VS])

22 | 11,358 dry tons/y | - | 10,213 dry tons/y vs | = | 1,145 tons/y non-digestable

Calculate tons of volatile solids reduced by digestion

23 | 10,213 tons/y VS | x | 80 % Reduction (80% recommended by Suez from operating facilities) | = | 8,171 tons/y vs conversion

Residual Volatile Solids

24 | 10,213 tons/y VS | - | 8,171 tons/y contamination | = | 2,043 tons/y residual VS

Total remaining solids in digestate

25 | 1,145 tons/y non-diges | + | 2,043 tons/y residual VS | = | 3,188 dry tons/y

Calculate the percent total solids in the digestate

26 | 3,188 dry tons/y | / | 82,406 wet tons/y organic | = | 3.9% percent total solids

Determine the filtrate volume after dewatering
7-day, 365 basis
First calculate the volume of filtrate from the separated digestate
without contribution of washwater and polymer

Calculate tons per day of cake solids

27 | 53,871 gal digestate/day | x | 8.34 lbs/gal | / | 2,000 lbs/ton | = | 225 wet tons digestate/day; 81,994 wet tons/y

Calculate dry tons digestate per day

28 | 3,188 dry tons/y | / | 365 days/y | = | 8.7 dry tons digestate/day
from eq. 25
calculation wet tons of cake per day

29 | 8.7 dry tons/day | / | 25 % TS | = | 35 wet tons/day; 12,750 wet tons/y

30 | Volume of separated liquor from digestate (does not include wash water)
53,871 gal digestate/day | - | 35 tons/d cake | x | 2,000 lbs/ton | / | 8.34 lbs/gal | = | 45,493 gal liquor/day

Emulsion Polymer Usage

Calculate pounds of active polymer required per day

31 | 8.7 dry tons/day | x | 20 lbs-dry ton | = | 174.7 lbs/day
from eq. 28
Calculate pounds of emulsion (neat) polymer required, as delivered

32 | 175 lbs active/day | / | 40 % active | = | 437 lbs emulsion/day

Calculate gallons of emulsion polymer required per day

33 | 437 lbs/day | / | 8.5 lbs/gal | = | 51 gallons/day

Calculate lbs of water required for dilution (0.5% dilution)

34 | 437 lbs/day emulsior | x | 200 parts H20 to poly | = | 87,330 lbs/day

Calculate gallons of made down polymer per day

35 | 87,330 lbs/day | / | 8.34 lbs/gal | = | 10,471 gallons/day

Calculate wash water requirement

calculate required hours to operate press

36 | 8.7 dry tons/day | / | 1.0 ton/press-hr | / | 1 presses | = | 9 hours
from eq. 28

Calculate water used per day

37 | 80 gal/min | x | 5 minutes/h | x | 1 presses | x | 9 hours (from eq. 36) | = | 3,600 gal/day

Calculate Total Filtrate Volume

Total Filtrate Volume Per Day

	45,493 gal liquor/day		69,243 TPY liquor
	10,471 gal polymer make-down/day		15,938 TPY polymer
	+ 3,600 gal belt wash water/day	+	5,479 TPY washwater
38	59,565 total gal filtrate/day		90,660 TPY filtrate

Calculate total feed to belt press

39 | 90,660 TPY filtrate | + | 12,750 TPY Cake (*from eq. 29*) | = | 103,410 TPY belt press feed

Calculate gallons per day of recycled filtrate

40 | - tons filtrate /y | x | 2,000 lbs/ton | / | 8.34 lbs/gal | / | 365 d/y | - gal recycle/day

Filtrate to MWRD (Sewer)

41 | 59,565 gal filtrate/day gross | - | - gal recycle/day | = | 59,565 gal/day to sewer; 248 TPD to sewer; 90,661 TPY to sewer

Determine the concentration of TKN and ammonia in the digestate
Calculate the Mass of TKN in the feed to the belt press

Calculate mass of N in the influent

42 | 4% % N in Org | x | 11,358 dry tons/y Organic (*from eq. 12*) | = | 454 tons N/ year in Organic

Concentration on wet-weight basis for received SSO

43 | 454 tons N/ year in Organic (*from eq. 42*) | / | 82,406 wet tons/y Organic (*from eq. 11*) | x | 1.00E+06 | = | 5,513 mg/l TKN

Expected NH4 concentration in received SSO before digestion

44 | 40,000 mg/l TKN | x | 7.5 % of NH4:TKN (*Valorgas Report D6.2 Rev1 2013 Table 8*) | = | 3,000 mg/l NH4 in raw feedstock by dry weight

NO.	DATE
BY	
REVISION	

NO.	DATE
BY	
REVISION	

NO.	DATE
BY	
REVISION	

GREEN ARROW

1680 MADISON AVENUE
WOOSTER, OH 44691

This drawing contains valuable confidential and proprietary information that belongs to Green Arrow ("GA"), and is subject to a Confidentiality and Nondisclosure Agreement. GA is the author and owner of this drawing, and retains all common law, statutory and other rights and privileges with respect hereto, including copyrights. The information contained herein may not at any time be used for any unauthorized purpose, nor reproduced by or provided to any third party, without the prior written consent of GA.

© 2017, Green Arrow.
All rights reserved.

MASS BALANCE
AD SYSTEM CALCULATIONS

AREA	CHECKED BY
	CH
JOB NO.	DRAWN BY
1512	NM
SCALE	DATE
N.T.S.	08/21/2021

DWG NO.
0001-005

SHEET NO.
5

Expected NH4 concentration (wet weight) as received

45 | 3,000 mg/l NH4 | x | 22.5 %TS | = | 675 mg/l NH4 in raw feedstock by wet weight
from eq. 3

46 | 3,000 mg/l NH4 | x | 11,358 dry tons/y Organic | / | 1.00E+06 | = | 34 tons NH4/y in SSO as received
from eq. 12

Calculate the concentration of Ammonia in the digestate

47 | 5,513 mg/l TKN | x | 70 % expected ratio between NH4 and TKN | = | 3,859 mg/l of NH4-N in digestate
from eq. 43

Calculate the Mass of Ammonia in the digestate

48 | 454 tons N/year | x | 70 % expected ratio between NH4 and TKN | = | 318 ton/y of NH4-N in digestate
from eq. 42 | 636,052 lbs NH4-N/ year

Calculate the mass of Organic N in the feed to the dewatering equipment

49 | 454 tons N/y | - | 318 ton/y of NH4-N in digestate | = | 136 tons Org N/ year
from eq. 42 | *from eq. 48*

Calculate the mass of organic nitrogen removed with the cake

50 | 136 tons Org N/ year | x | 63% partition rate | = | 86 tons Org N in cake org N = TKN - NH3
from eq. 49 belt press feed

TKN concentration in belt press feed (includes dilution from polymer makedown and wash water)

51 | 454 tons N/ year in Organic | / | 103,410 Total Wet Tons feed/ Year | x | 1.00E+06 | = | 4,393 mg/l TKN in belt press feed
from eq. 42 | *from eq. 39*

Calculate the concentration of Ammonia in the belt press feed

52 | 4,393 mg/l TKN | x | 70 % expected ratio between NH4 and TKN | = | 3,075 mg/l of NH4-N in belt press feed
from eq. 51

Calculate the mass of NH4-N in the filtrate to MWRD

53 | 3,075 mg/l NH4-N | x | 0.059565 MGD | x | 8.34 lbs/gal | = | 1,528 lbs-NH4/d
from eq. 52 | *from eq. 41* | 279 TPY

Calculate the mass of NH4-N leaving with the cake

54 | 318 TPY NH4 press feed | - | 279 TPY NH4 filtrate | = | 39 TPY NH4 in cake
from eq. 48 | *from eq. 53*

Calculate the mass of TKN leaving with the cake

55 | 86 tons Org N/y | + | 39 TPY NH4 in cake | = | 125 TPY TKN with the cake
from eq. 50 | *from eq. 54* | 685 lbs/day

Calculate the mass of TKN in the filtrate to MWRD

56 | 454 TPY TKN | - | 125 TPY TKN with the cake | = | 329 TPY TKN with the filtrate
from eq. 42 | *from eq. 55* | 1,804 lbs/day

calculate TKN concentration in the filtrate

57 | 1,804 lbs/d TKN with the filtrate | / | 0.059565 MGD | / | 8.34 lbs/gal | = | 3,632 mg/l TKN filtrate to MWRD
from eq. 56 | *from eq. 41*

calculate TKN concentration in wet cake

58 | 685 lbs/d TKN with the cake | / | 69,864 lbs/d cake | x | 1,000,000 | = | 9,810 mg/l TKN cake
from eq. 29

Digester Organic Loading Calculations

Calculate the Total Working Digester Volume in US Customary and Metric Units

59 | 1,500,000 gal/tank | x | 1 tanks | = | 1,500,000 gallons digester volume
1.5 MGAL is the min. avg working volume

60 | 1,500,000 gal | / | 7.48 gal/CF | = | 200,535 CF of digester volume

61 | 1,500,000 gal | / | 264.17 gal/CM | = | 5,678 cubic meters of digester volume

Determine the Hydraulic Retention Time for the system

62 | 1,500,000 gal | / | 54,141 gal/day | = | 27.7 days HRT
from eq. 16

Determine the Organic Loading Rate for the system

Determine volume of volatile solids fed in US Customary and Metric Units

63 | 28 TPD/VS | x | 2000 lbs/ton | = | 55,962 lbs-VS/d
from eq. 13

64 | 55,962 lbs-VS/d | / | 2.204 lbs/kg | = | 25,391 kg-VS/d

Determine volume of COD fed in US Customary and Metric Units

65 | 55,962 lbs-VS/d | x | 1.7 COD/VS | = | 95,136 lbs-COD/d

66 | 25,391 kg-VS/d | x | 1.7 COD/VS *ratio provided by Suez* | = | 43,165 kg-COD/d

Calculate OLR in terms of mass of VS fed per unit digester vol. in US Customary and Metric Units

67 | 55,962 lbs-VS/d | / | 200,535 CF of digester vol *from eq. 60* | = | 0.28 lbs VS/CF day

68 | 25,391 kg-VS/d | / | 5,678 CM of digester vol | = | 4.5 kg VS/CM day
from eq. 64 | *from eq. 61*

Calculate OLR in terms of mass of COD fed per unit digester vol. in US Customary and Metric Units

69 | 95,136 lbs-COD/d | / | 200,535 CF of digester vol | = | 0.47 lbs COD/CF day
from eq. 65 | *from eq. 60*

70 | 43,165 kg-COD/d | / | 5,678 CM of digester vol | = | 7.6 kg COD/CM day
from eq. 66 | *from eq. 61*

Calculate the average concentration of COD in the feedstock

71 | 95,136 lbs-COD/d | / | 451,538 lbs/day feedstock | x | 1,000,000 | = | 210,694 mg/l COD
from eq. 65 | *from eq. 14*

Calculate the methane production rate

Calculate the amount of COD to be reduced or destroyed

72 | 43,165 kg-COD/d | x | 80 % | = | 34,532 kg-COD/d destroyed
from eq. 66

Calculate the methane yield from the COD that was reduced (norm cubic meters)

73 | 34,532 kg-COD/d destroyed | x | 0.35 m^3-CH4/kgCOD[des] | = | 12,086 m^3 CH4/day

Show the volumetric CH4 production in US Customary and SI units for different time intervals

Calculate CH4 produced per hour

74 | 12,086 m^3 CH4/day | / | 24 h/d | = | 504 m^3 CH4/h

Calculate cubic feet of methane produced per day

75 | 12,086 m^3 CH4/day | x | 35.3 CF/m^3 | = | 426,645 SCFD

Calculate cubic feet of methane produced per minute

76 | 426,645 CFD | / | 1440 min/d | = | 296 SCFM

Calculate the gross recoverable energy from the produced methane in SI units

Calculate the energy per day

77 | 12,086 m^3 CH4/day | x | 38 MJ/m^3 | = | 459,278 megajoules/d
from eq. 73

Calculate the energy per day

78 | 504 m^3 CH4/h | x | 38 MJ/m^3 | = | 19,137 megajoules/h
from eq. 74

Calculate the gross recoverable energy from the produced methane in US Customary units

Calculate the gross energy value per day

79 | 426,645 SCFD | x | 0.001 MMBTU/SCF | = | 427 MMBTU/d

Calculate the gross energy value per hour

80 | 427 MMBTU/d | / | 24 h/d | = | 17.8 MMBTU/h

Calculate the biogas flow rates in metric units

Calculate the cubic meters of biogas produced per day

81 | 12,086 m^3 CH4/day | / | 60 % CH4 | = | 20,144 m^3 biogas/day

Calculate the cubic meters of biogas produced per hour

82 | 20,144 m^3 biogas/day | / | 24 h/d | = | 839 m^3 biogas/h

Calculate the cubic feet of biogas produced per day

83 | 426,645 SCFD | / | 60 % CH4 | = | 711,075 SCFD biogas

Calculate cubic feet of biogas produced per minute

84 | 711,075 SCFD biogas | / | 1440 min/d | = | 494 SCFM biogas

NO.	DATE
BY	
REVISION	
NO.	DATE
BY	
REVISION	
NO.	DATE
BY	
REVISION	

GREEN ARROW

1680 MADISON AVENUE
WOOSTER, OH 44691

This drawing contains valuable confidential and proprietary information that belongs to Green Arrow ("GA"), and is subject to a Confidentiality and Nondisclosure Agreement. GA is the author and owner of this drawing, and retains all common law, statutory and other rights and privileges with respect hereto, including copyrights. The information contained herein may not at any time be used for any unauthorized purpose, nor reproduced by or provided to any third party, without the prior written consent of GA.

© 2017, Green Arrow. All rights reserved.

MASS BALANCE
AD SYSTEM CALCULATIONS

AREA	CHECKED BY: CH
JOB NO.: 1512	DRAWN BY: NM
SCALE: N.T.S.	DATE: 08/21/2021
DWG NO.: 0001-006	
SHEET NO.: 6	

NITROGEN MASS BALANCE SUMMARY TABLE

		Foodwaste	Digestate	Filtrate	Cake
NH4	mg/l	675	3,859	3,075	3,075
		from eq. 45	*from eq. 47*	*from eq. 53*	*from eq. 53*
	TPY	34	318	279	39
		from eq. 46	*from eq. 48*	*from eq. 53*	*from eq. 54*
TKN	mg/l	5,513	5,513	3,632	9,810
		from eq. 43	*from eq. 43*	*from eq. 57*	*from eq. 58*
	TPY	454	454	329	125
		from eq. 42	*from eq. 42*	*from eq. 56*	*from eq. 55*

1. All concentrations for TKN and Ammonia are wet weight values.
2. Organic Nitrogen is converted to ammonia during digestion. TKN is conserved.
3. TKN = Organic N + NH4
4. 63% of organic N is assumed to be removed with the cake solids.
5. Ammonia concentration in the filtrate and the cake is assumed to be equal.
6. Concentration of N is reduced during dewatering due to dilution. Mass is conserved.
7. See mass balance calculation sheets 5 and 6 for full equations.

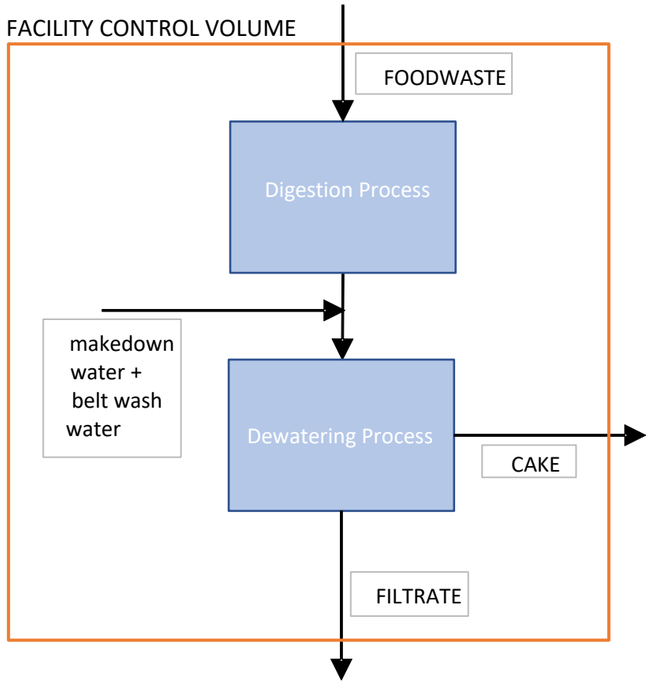

MASS BAL. EQUATIONS FOR CONTROL VOLUME

N IN FOODWASTE = N IN CAKE + N IN FILTRATE
N IN DIGESTATE = N IN FEEDSTOCK

NO.	DATE
BY	
REVISION	

NO.	DATE
BY	
REVISION	

NO.	DATE
BY	
REVISION	

GREEN ARROW
1680 MADISON AVENUE
WOOSTER, OH 44691

This drawing contains valuable confidential and proprietary information that belongs to Green Arrow ("GA"), and is subject to a Confidentiality and Nondisclosure Agreement. GA is the author and owner of this drawing, and retains all common law, statutory and other rights and privileges with respect hereto, including copyrights. The information contained herein may not at any time be used for any unauthorized purpose, nor reproduced by or provided to any third party, without the prior written consent of GA.

© 2017, Green Arrow.
All rights reserved.

MASS BALANCE
NITROGEN BALANCE

AREA	CHECKED BY
	CH
JOB NO.	DRAWN BY
1512	NM
SCALE	DATE
N.T.S.	08/21/2021

DWG NO.
0001-007

SHEET NO.
7

Digester Working Volume	1,500,000
Hydraulic Retention Time (HRT)	25
Vol per day to feed	60,000
Pump flow (GPM)	150
Time for dosing 1 tank (hours)	6.7
Lbs of Feedstock per day	500,400
Delta T	100
MMBTU/Day	50.0
Hours to heat	23
MMBTU/HR	2.2
MMBTU/HR/HE	1.1
Dosing Periods	12
Gallons per Tank/period	5,000
Minutes per Period	33.3

In-tank heating capacity

Feedstock Tank Min. Heat transfer rate (BTU/h)	1,250,000
Feedstock tank temperature (°F)	113
Lineal feet of tubing in feedstock tank	1,200
Digester Tank Min. Heat transfer rate (BTU/h)	1,000,000
Digester tank temperature (°F)	125
Lineal feet of tubing in digester tank	1,150
Glycol feed supply temp. (°F)	160

Heat Exchanger Sizing Requirements
Using an operating digester volume of 1,500,000 gallons, a minimum hydraulic retention time of 25 days is chosen as the hydraulic loading limit for the system. 1,500,000 gal/ 25 days = 60,000 GPD. The nominal hydraulic retention time is 27.7 days with 54,141 GPD flow.
Assume the highest average temperature differential needed during the winter months is 100 degrees F. This would raise the temperature of received feedstock from 40 F to 140 F.

50.0 MMBTU/Day is needed to raise the temperature of 60,000 gallons (500,400 lbs) of material 100 degrees F. The pump will be available to heat, either during dosing or direct circulation, 23 hours per day. This accounts for lost time during function changes that require automatic valve switching. After fluid transfer, the pump is shut off and all valves in the circuit are closed. The required valves are opened for the next cycle and the pump resumes operation of the programmed fluid transfer function. About 2.2 MMBTU/HR will need to be transferred on average to meet the winter heat demand.

External Heat Exchanger Capacity
The planned shell and tube sludge heat exchanger, E-080, that is inline with the feedstock dosing pumps will not provide sufficient heat transfer area to meet the full demand for thermophilic operation. The expected heat transfer calculations are summarized in the tables below. Feedstock will be maintained around 113° F (45° C) in the biomass tank so that during dosing the temperature can be raised to about 134° F. The rate of heat transfer decreases as the inlet temperature of feedstock increases. A reduction of the temperature difference between the heat transfer fluid from the boilers and the sludge reduces the heat transfer rate. Since the heat exchangers have a fixed heat transfer area, they will have a lower heat transfer rate when circulating hot digestate then when feeding cooler biomass.

Feedstock dosing to the digester may be split into equal time periods throughout the day. Using 12 periods, 5,000 gallons will be pumped to each tank over a 33 minute period.

An example time chart for Pumps P-080A and P-080B is shown below. The function times are automatically calculated in the PLC controller based on dosage and heating set-points that are editable by the plant operators via the plant SCADA system. The operator may input for each tank the target temperature, the gallons per day of feedstock transfer, and the pump speed for each function.

In-tank heat exchanger capacity
Additional heat transfer capacity will be installed in the feedstock tank and the digester tank. Stainless steel corrugated tubing will be wrapped along the inside wall of the tanks and will passively transfer heat from circulating heated glycol from the boilers to the sludge. Both tanks are actively mixed, so the sludge will not need to be pumped in order to transfer heat. In-tank heating will be used preferentially over the external heat exchanger to reduce sludge pumping time and wear. The total heat exchange capacity of the in-tank heating loops is 2.25 MMBTU/h (1.25 MMBTU/h in the feedstock tank and 1.0 MMBTU/h in the digester) and will be sufficient to maintain tank temperatures at a feeding rate of 60,000 gallons per day. The in-tank heat loop circulation will be modulated off/on as required by the SCADA to maintain the desired target digestate temperature. The tubing is mounted between 10-feet and 20-feet above the tank floor. This will ensure good sludge circulation around the pipe and keeps it above the tank access panels for any future maintenance. The external heat exchanger will be relied on when the feedstock tank level drops below the elevation of the heat tubing. The digester will always be operated above 1.5 MGAL and will only need to rely on the external heat exchanger during plant commissioning.

Heating and Dosing Pumps
Positive displacement pumps Seepex BN-70 6LS or equivalent are specified for P-080A and P-080B. The motors are powered by a variable frequency drive to control liquid transfer volumetric rate. An inline magnetic flow meter (FT-80) will totalize the feedstock dosed to the digester and the value will be used the plant SCADA to adjust pump cycle times.

Pump 80A/B Schedule	12:00 AM	12:20 AM	12:40 AM	1:00 AM	1:20 AM	1:40 AM	2:00 AM	2:20 AM	2:40 AM	3:00 AM	3:20 AM	3:40 AM	4:00 AM	4:20 AM	4:40 AM	5:00 AM	5:20 AM	5:40 AM	6:00 AM	6:20 AM	6:40 AM	7:00 AM	7:20 AM	7:40 AM	8:00 AM	8:20 AM	8:40 AM	9:00 AM	9:20 AM	9:40 AM	10:00 AM	10:20 AM	10:40 AM	11:00 AM	11:20 AM	11:40 AM	12:00 PM	12:20 PM	12:40 PM	1:00 PM	1:20 PM	1:40 PM	2:00 PM	2:20 PM	2:40 PM	3:00 PM	3:20 PM	3:40 PM	4:00 PM	4:20 PM	4:40 PM	5:00 PM	5:20 PM	5:40 PM	6:00 PM	6:20 PM	6:40 PM	7:00 PM	7:20 PM	7:40 PM	8:00 PM	8:20 PM	8:40 PM	9:00 PM	9:20 PM	9:40 PM	10:00 PM	10:20 PM	10:40 PM	11:00 PM	11:20 PM	11:40 PM
Dosing/Heating To T-105																																																																								
Feedstock Circulation/Heating																																																																								

Heat exchange when holding feedstock tank above 113F

		Sludge			**Water**					**Sludge**			**Water**			Heat Transfer Coefficient				Calc. var.	Calc. var.
	H/E	*Flow Rate*	*T[in]*	*T[out]*	*Flow Rate*	*T[in]*	*T[out]*	*Heat Transfer Rate*	*LMTD*	*Mass Flow*	*C[p]*	*Cap. Rate*	*Mass Flow*	*C[p]*	*Cap. Rate*	*U*		*Area/unit*	*Total Area*	*Alpha*	*Beta*
	Units	GPM	°F	°F	GPM	°F	°F	BTU/hr	F	lbs/s	BTU/lbm	BTU/(lbm*s)	lbs/s	BTU/lbm	BTU/(lbm*s)	BTU/(hr*Ft²*F)	BTU/(s*Ft²*F)	ft^2	ft^2		
Heating E-080, Circuit 1	1	150.0	**113.0**	124.6	100.0	180.0	162.7	866,299	52.5	20.8	1	20.8	13.9	1	13.9	100	0.028	165	165	0.17247	0.74130
Heating E-080, Circuit 2	1	150.0	124.6	134.1	100.0	180.0	165.7	716,891	43.4	20.8	1	20.8	13.9	1	13.9	100	0.028	165	165	0.17247	0.74130
								1,583,189	*E-080B*												

Heat exchange when circulating thermophilic sludge

Heating E-080, Circuit 1	1	150.0	**125.0**	135.9	100.0	180.0	163.6	817,822	41.3	20.8	1	20.8	13.9	1	13.9	120	0.033	165	165	0.19834	0.70249
Heating E-080, Circuit 2	1	150.0	135.9	144.7	100.0	180.0	166.9	655,616	33.1	20.8	1	20.8	13.9	1	13.9	120	0.033	165	165	0.19834	0.70249

The upper table shows calculated feedstock exit temperatures for two external heat exchangers operated in series with 180 degree heat transfer fluid. Heat transfer coefficient for this unit is specified at 100 BTU/(hr-Ft^2 - °F) for higher viscosity feedstock with an effective area of 165 Ft^2. Total heat transfer for both units is 2,126,672 BTU/HR. The specified external heat exchangers do not provide sufficient capacity meet the heating demand for a system throughput of 60,000 GPD with a required temperature rise of 100° F (40° -> 140°). The external heat exchanger will supplement the heat exchangers internal to the digester and feedstock tank.

The lower table shows the calculated digestate exit temperatures for two heat exchangers operated in series with 180 degree heat transfer fluid. Heat transfer coefficient for this unit is specified at 120 BTU/(hr-Ft^2 - °F) for digestate with an effective area of 165 Ft^2. Total heat transfer for both units is only 1,473,439 BTU/HR when circulating thermophilic digestate. This is more than 650,000 BTU/h less than the heat transfer rate when heating cooler feedstock. This demonstrates that heat transfer is maximized by circulating the lowest temperature sludge.

NO.	DATE
BY	
REVISION	

NO.	DATE
BY	
REVISION	

NO.	DATE
BY	
REVISION	

GREEN ARROW

1680 MADISON AVENUE
WOOSTER, OH 44691

This drawing contains valuable confidential and proprietary information that belongs to Green Arrow ("GA"), and is subject to a Confidentiality and Nondisclosure Agreement. GA is the author and owner of this drawing, and retains all common law, statutory and other rights and privileges with respect hereto, including copyrights. The information contained herein may not at any time be used for any unauthorized purpose, nor reproduced by or provided to any third party, without the prior written consent of GA.

© 2017, Green Arrow.
All rights reserved.

MASS BALANCE
HEATING AND DOSING TIME STUDY

AREA	CHECKED BY CH
JOB NO. 1512	DRAWN BY NM
SCALE N.T.S.	DATE 08/21/21
DWG NO. 0001-008	
SHEET NO. 8	

PHASE I WATER FLOW REQUIREMENTS

	INTERMITTENT SERVICE	MAX FLOW REQ.		TOTAL USAGE IN 12 HR SHIFT
ITEM		GPM	GPH	GPD
1	BELT PRESS WASHBARS	80	4,800	4,800
2	POLYMER MAKEDOWN	50	3,000	13,500
3	SEPARATION MILLS /GRIT	20	1,200	7,200
4	WASHDOWN	75	4,500	6,000
	TOTAL	150	9,000	31,500

Notes:
1. One belt press. Wash bars run 5 mins per hour with fresh water, but may need longer cleaning cycles depending on belt requirements.
2. Polymer water fills tank through venturi nozzle
3. One mill. 10 GPM per press for packaging wash and grit wash
4. Wash down assumes use of one 75 GPM firehose nozzle for max case. Two garden hoses in use for typical requirement.
5. Install sufficient water capacity for future water flow requirements.

FUTURE WATER FLOW REQUIREMENTS

		Max	Typical
Item		GPM	GPM
1	Belt Presses (2)	160	80
2	Separation Mills /grit (2)	40	20
3	Polymer	50	50
4	Wash Down	75	10

Max instant flow demand	325	
Typical flow demand		160
Minimum Process Demand		20

Notes:
1. Two belt presses. Wash bars run 5 mins per hour with fresh water, but may need longer cleaning cycles depending on belt requirements
2. 2 mills. 10 GPM per press for packaging wash and grit wash
3. Polymer water fills tank through venturi nozzle
4. Wash down assumes use of one 75 GPM firehose nozzle for max case. Two garden hoses in use for typical requirement.

Belt presses may be operated independently of separation mills. Polymer make-down is intermittent usage during belt press operation, and doesn't necessarily coincide with the wash bars. Fires hose usage should be for maintenance cleaning only. Once/week for the receiving floor if needed and used during tank cleaning.

City water pressure is low, between 30 and 40 PSI. Use booster pump to deliver up to 85 PSI water for process connections, minimum of 60 PSI.

PHASE I INSTRUMENT AIR FLOW REQUIREMENTS

Description	**P&ID Name**	**PSIG**	**Volumetric Flow (CFM)**	
		P1	**Q1**	**Q2**
General plant, valves (high est)	-	85	3.5	2.5
Gas Upgrade (PSA skid)	-	100	17.7	14.5
Belt Press		85	4	2.9
Strain Press (screener) max.		125	1	1.0
				0.0
				0.0
				0.0
			Total	**20.9**

Example Equation
Q2 =(14.7+P1)*Q1/(14.7+P2)
momentary

MAX AIR DEMAND BY PROCESS STATED. AVERAGE CONSUMPTION WILL BE LOWER

w/o dryer 20.9

				CFM	
Diaphragm Pumps for intermittent maintenance use		0	30	3.2	usage based on 30 SCFM on SandPiper 2-inch, HD-20-F, 75 GPM at 15' HD - supply pressure regulated to 60 PSI

Kaeser SM 10 - compressor capacity	125	42	42.0	performance listed as CFM
Kaeser KADW50A (-40) - purged dryer consumption		12.44	12.4	stated as 10.2 *1.22 for SCFM
Total production per compressor			29.6	

Qty of compressors 2
Qty of dryers 1

AIR CONSUMPTION WILL BE MONITORED WITH A FLOW METER AND TRACKED ON THE SCADA TO IDENTIFY ANY SYSTEM AIR LOSSES DUE TO LEAKAGE.

NO.	DATE
BY	
REVISION	

NO.	DATE
BY	
REVISION	

NO.	DATE
BY	
REVISION	

GREEN ARROW
1680 MADISON AVENUE
WOOSTER, OH 44691

This drawing contains valuable confidential and proprietary information that belongs to Green Arrow ("GA"), and is subject to a Confidentiality and Nondisclosure Agreement. GA is the author and owner of this drawing, and retains all common law, statutory and other rights and privileges with respect hereto, including copyrights. The information contained herein may not at any time be used for any unauthorized purpose, nor reproduced by or provided to any third party, without the prior written consent of GA.

© 2017, Green Arrow.
All rights reserved.

MASS BALANCE
WATER AND AIR USAGE

AREA	CHECKED BY
	CH
JOB NO.	DRAWN BY
1512	NM
SCALE	DATE
N.T.S.	08/21/2021

DWG NO.
0001-009

SHEET NO.
9

GREEN ARROW ENGINEERING	**Green Era** **Equipment Spec** **Tanks**	

T-050AB Liquids Receiving Tanks

30,000 gallon cast-in-place concrete tank below main level building floor slab with bulkhead to lower level

REVISION LEVEL	DATE	DESCRIPTION	BY
R0	10/12/21	INITIAL RELEASE, WITH DRAWINGS	NMAST

GREEN ARROW ENGINEERING	**Green Era** **Equipment Spec** **Tanks**	

Section 1 - Basic Equip. Data		
1.0	Tag No.	T-050AB
1.1	Empty to	P-050AB to separation mills
1.2	Filling from	Waste haulers will directly discharge to these tanks from their truck via 4-inch or 6-inch hose and camlock.
1.3	Vent	Headspace directly ducted to odor control suction header.

Section 2 – Contractor / Engineer		
2.0	Contractor	Pepper Construction
2.1	Structural Engineer	Mike Haas, Greenberg Farrow, Arlington Heights

Section 3 – Fluid Properties, Feedstock								
3.0	Fluid Desc.	Feedstock, pumpable, ranges stated as received prior to blending with other feedstocks.						
3.1	TS%	2-10%	3.2	pH range	2.0 – 7.0 SU	3.3	Temp. range	35 - 130° F
3.4	S.G.	1.0	3.5	Viscosity	1 - 300 cPs	3.6	Phase	Liquid
3.7	Solids Handling, Max Spherical Size	2.5 inches						
3.8	Abrasives	0.25% grit by weight						
3.9	Corrosives	Acetic Acid <2% V/V, Propionic acid <1% V/V, Long Chain Fatty Acids <0.5% V/V, fats and oils						
3.10	Notes	Directly received from the trucks as delivered.						

Section 4 – Tank Spec								
4.0	Volume	30,855 gallons at 10’ depth, refer to plans						
4.1	Basic Dimensions (inches)	Inside length	30.0’	Inside width	13’-9”	Inside height	10’-10”	
4.2	Material of Construction	Cast-in place concrete sidewalls. Pre-cast plank lid, 12-inch. 2-inch concrete topping. H-20 wheel loading.						
4.3	Max fill level	10.0’ @ 30,855 gallons						
4.4	Overflow Vol	10’-10” @ 33,426 gallons						
4.5	Volume per foot depth	3085.5 gal/ft						
4.6	Access	30-inch manway in lower sidewall and 30-inch manhole from top to cast-in-place ladder rungs.						
4.7	Partitions	None.						
4.8	Coating	Inside to be coated with Novolac epoxy sealer for severe service with immersion. Liner to protect concrete. Sherwin Williams Cor-Cote HCR system or engineered approved equal.						
4.9	Agitation	None.						

Section 5 - Nozzles		
5.0	See plan	All pipe penetrations will be core drilled after casting.
5.1	Pipe to wall seals	Link-seal or engineered approved equivalent.

Section 6 - Control		
6.0	Level control	Side-wall pressure transducer and top-down radar, std.
6.1	Fill indicator	Stack light showing flashing red for high-fill
6.2	Alarming	SCADA alarm management, per std.

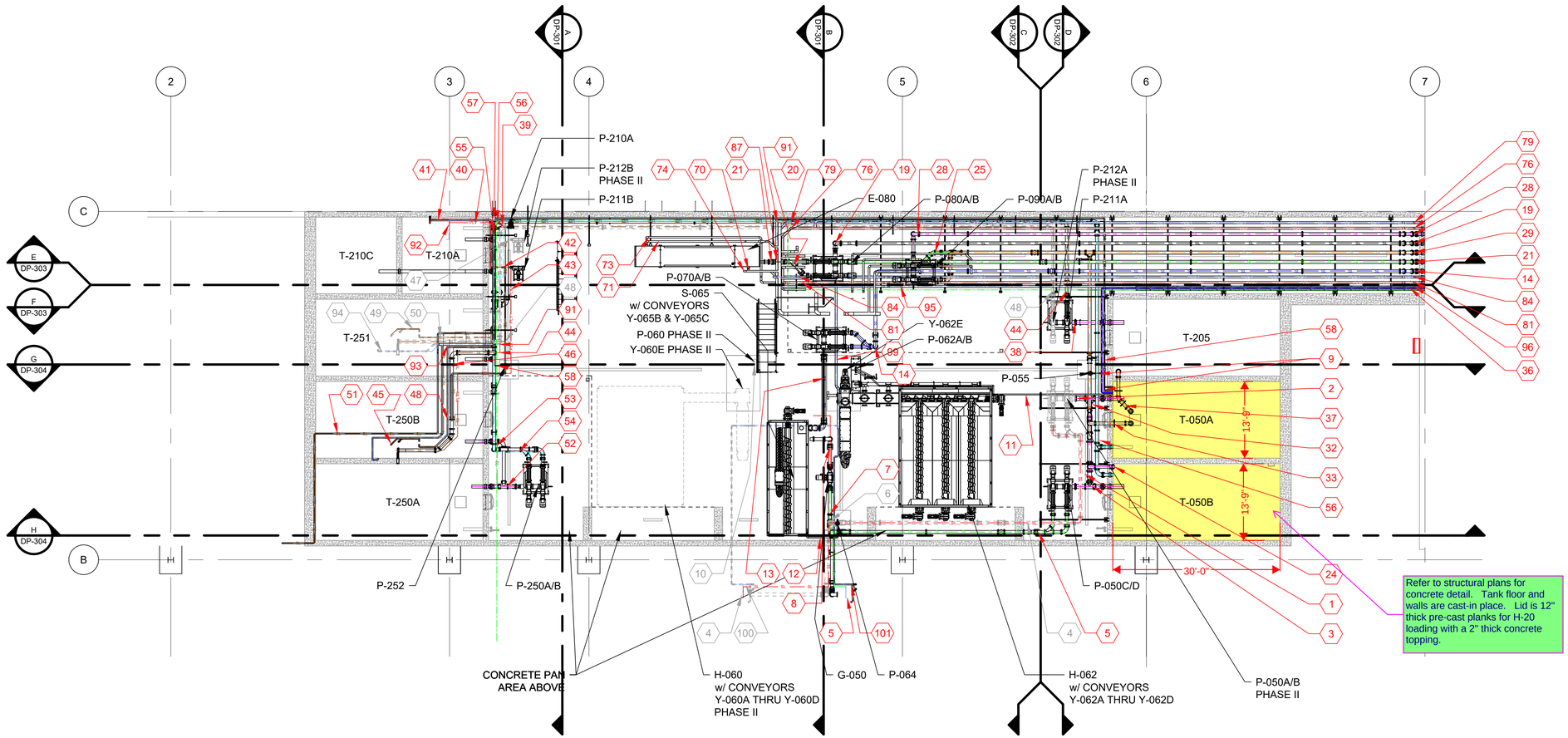

DIGESTER BUILDING LOWER LEVEL
PROCESS PIPING

SCALE: 3/32" = 1'-0"

1 / DP-410

3/32" = 1'-0"

2' 0 2' 4' 6' 8' 12' 16' 24'

NO.	DATE
BY	
REVISION	
NO.	DATE
BY	
REVISION	
1	08/24/2021
BR	
RE-ISSUE WITH EQUIPMENT SUBMITTALS TO DATE	

ACEng
ADAMS & CHRISTENSEN ENGINEERING, INC.
782 WEXFORD CT.
GRAYSLAKE, ILLINOIS 60030
CERTIFICATE OF AUTHORIZATION NO. 05379

GREEN ARROW
2759 LONG ROAD
WOOSTER, OH 44691

THIS DRAWING CONTAINS VALUABLE CONFIDENTIAL AND PROPRIETARY INFORMATION THAT BELONGS TO GREEN ARROW ("GA"), AND IS SUBJECT TO A CONFIDENTIALITY AND NONDISCLOSURE AGREEMENT. GA RETAINS OWNERSHIP OF THIS DRAWING, AND RETAINS ALL COMMON LAW, STATUTORY AND OTHER RIGHTS AND PRIVILEGES WITH RESPECT HERETO, INCLUDING COPYRIGHTS. THE INFORMATION CONTAINED HEREIN MAY NOT BE USED, IN WHOLE OR IN PART, FOR ANY UNAUTHORIZED PURPOSE, NOR REPRODUCED BY OR PROVIDED TO ANY THIRD PARTY, WITHOUT THE PRIOR WRITTEN CONSENT OF GA.

©2020, GREEN ARROW.
ALL RIGHTS RESERVED.

DIGESTER BUILDING
LOWER LEVEL
PROCESS PIPING

GREEN ERA
650 W. 83RD ST.
CHICAGO, IL 60620

AREA	CHECKED BY
	NM
JOB NO.	DRAWN BY
1512	BR
SCALE	DATE
SEE NOTE	04/09/2021
DWG NO.	
SHEET NO.	
DP-510	

Green Arrow\02 Projects\1512 Chicago - Feldman - Green Era\07 Drawings\04 Construction\Green Era Equipment Layout.dwg

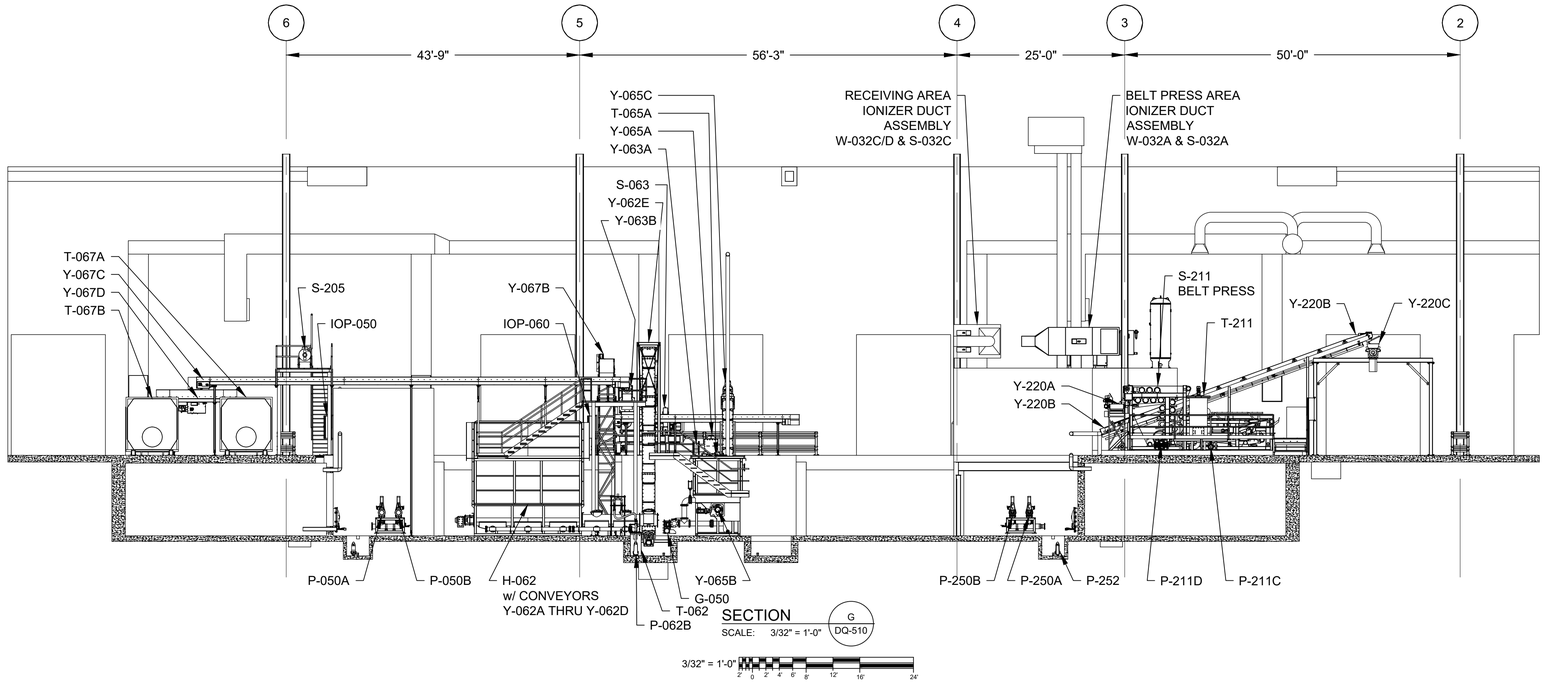

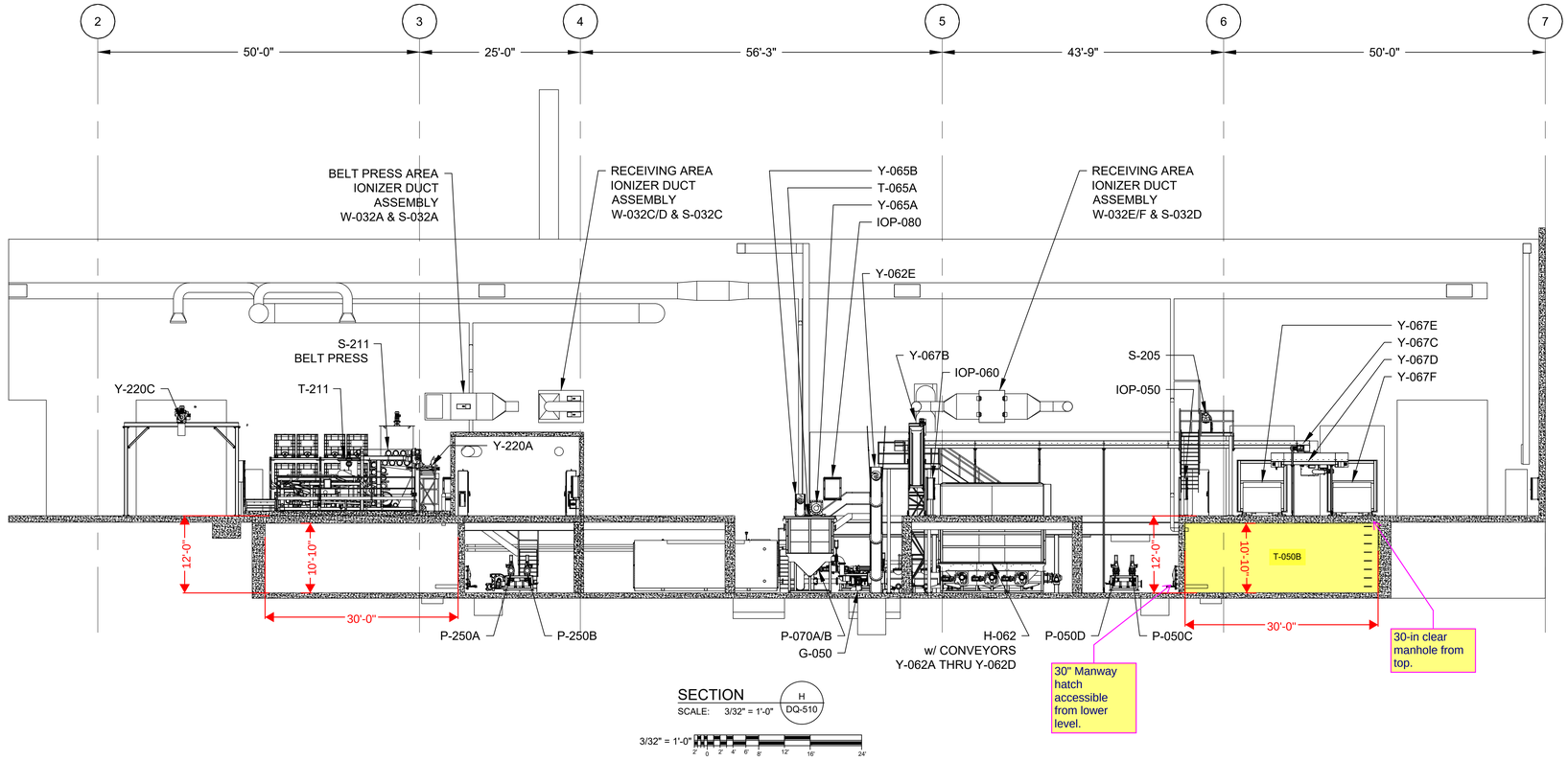

NO.	DATE
BY	
REVISION	
NO.	DATE
BY	
REVISION	
NO. 1	DATE 08/24/2021
BY BR	
REVISION RE-ISSUE WITH EQUIPMENT SUBMITTALS TO DATE	

ACEnet
ADAMS & CHRISTENSEN ENGINEERING, INC.
762 WEXFORD CT.
GRAYSLAKE, ILLINOIS 60030
CERTIFICATE OF AUTHORIZATION NO. 05379

GREEN ARROW
2759 LONG ROAD
WOOSTER, OH 44691

THIS DRAWING CONTAINS VALUABLE PROPRIETARY AND CONFIDENTIAL INFORMATION THAT BELONGS TO GREEN ARROW ("GA"), AND IS SUBJECT TO CONFIDENTIALITY AND NONDISCLOSURE AGREEMENT. GA IS THE AUTHOR AND OWNER OF THIS DRAWING, AND RETAINS ALL COMMON LAW, STATUTORY AND OTHER LEGAL RIGHTS, INCLUDING COPYRIGHTS, IN THE INFORMATION CONTAINED HEREIN. MAY NOT AT ANY TIME BE USED FOR AN UNAUTHORIZED PURPOSE, NOR REPRODUCED, BY OR PROVIDED TO ANY THIRD PART WITHOUT THE PRIOR WRITTEN CONSENT OF GA.

©2020, GREEN ARROW.
ALL RIGHTS RESERVED.

DIGESTER BUILDING
PROCESS EQUIPMENT
SECTIONS

GREEN ERA
650 W. 63RD ST.
CHICAGO, IL 60620

AREA	CHECKED BY
	NM
JOB NO. 1512	DRAWN BY BR
SCALE SEE NOTE	DATE 12/21/2020
DWG NO.	
SHEET NO. DQ-304	

GREEN ARROW ENGINEERING	**Green Era** **Equipment Spec** **Tanks**	

T-100 Biomass Tank

320,000 gallons, Bolted Steel

REVISION LEVEL	DATE	DESCRIPTION	BY
0	11/24/18	INITIAL RELEASE	NMAST
1	5/1/20	REMOVED PREVAILING WAGE REQ.	NMAST
2	8/1/21	UPDATED TO SCHUMANN TANK SPEC. ATTACHED STAMPED SUBMITTAL DRAWINGS. INCREASED PRODUCT TEMP RANGE TO 130F, (55C)	NMAST

GREEN ARROW ENGINEERING	**Green Era** **Equipment Spec** **Tanks**	

Section 1 - Basic Equip. Data		
1.0	Tag No.	T-100
1.1	Empty to	P-080AB to digester T-105
1.2	Filling from	P-070AB from pulp tank

Section 2 – Vendor Info		
2.0	Manufacturer	Schumann Tanks USA, 777 Bruckell Ave, Suite 500, Miami, FL 33131
2.1	Type	Bolted Steel, Rolled Tapered Panel Design, carbon steel, porcelain coated
2.2	Sales Contact	Lucas Rudler, lucas.rudler@schumanntanksusa.com

Section 3 – Fluid Properties								
3.0	Fluid Desc.	Feedstock, pumpable						
3.1	TS%	10-14% avg.	3.2	pH range	4.0 – 7.0 SU	3.3	Temp. range	50 - 130° F
3.4	S.G.	1.0	3.5	Viscosity	200 cPs	3.6	Phase	Liquid
3.7	Solids Handling, Max Spherical Size	3/8 inches						
3.8	Abrasives	0.25% grit by weight						
3.9	Corrosives	Acetic Acid <2% V/V, Propionic acid <1% V/V, Long Chain Fatty Acids <0.5% V/V, fats and oils						
3.10	Notes	SikaFlex TS Plus mastic has been used successfully for this service at other facilities						

Section 4 – Tank Geometry		
4.0	Tank Quantity:	1
4.1	Construction Method:	Rolled Tapered Panel (RTP) Bolted Design – For more information please review the following TCAG brochures "*Liquid Containment Solutions*" & "*RTP Design vs. API-12B*"
4.2	Materials of Construction:	Carbon steel
4.3	Nominal Inside Diameter:	33.63 feet (10.25 m)
4.4	Nominal Eave Height:	52.84 feet (16.1 m), from structural calc sheets
4.5	*Note: Nominal eave height is measured from the top of finished concrete floor to top of eave angle*	
4.6	Bottom Style:	**Base Angle** supplied by Schumann and installed by Schumann
4.7	Tank Supported By:	Reinforced concrete foundation designed & supplied / installed by others meeting the requirements of AWWA D103-09
4.8	Roof Style:	Steel cone (15°) slope, approx. 3.25 rise to 12 in run
4.9	Roof Support Style:	Self-supported with HDG external rafters. Roof panel material 316 SS.
4.10	Usable Capacity:	3.45 x 10^5 US gallons based on 12" total freeboard, structural plans 331,121 US gallons based on 36" freeboard (49.84 ft)

4.11	Gallons per foot	6643.7 gal/ft

Section 5 – Design Criteria				
5.0	Design Specifications:	AWWA D103-09		
5.1	Seismic Design:	AWWA D103-09: S_S=16.8%g, S_1=5.7%g, Site Class=D, Use Group=3, I=1.50		
5.2	Wind Design:	ASCE 7-16 Table 29.1-2: 120mph, Exp. C		
5.3	Roof Live Load:	20 pounds per square foot		
5.4	Ground Snow Load:	20 pounds per square foot (24 PSF per ASCE 7-16, Sec 7.3.4)		
5.5	Product Stored:	Wastewater		
5.6	Specific Gravity:	1.10 assumed		
5.7	Product pH Range:	3 to 11 assumed		
5.8	Design Pressure:	7.0 ounces per square inch	12.0 inWC	30 millibar
5.9	Design Vacuum:	1.2 ounces per square inch	2.0 inWC	5 millibar
5.10	Operating Pressure:	5.8 ounces per square inch	10.0 inWC	25 millibar
5.11	Operating Vacuum:	Atmospheric	0 inWC	0 millibar
5.12	Crack Pressure PRV:	6.0 ounces per square inch	10.4 inWC	26 millibar
5.13	Crack Vacuum Pressure:	(-) 0.5 ounces per square inch	(-) 0.87 inWC	(-) 2 millibar
5.14	Design Temperature:	Ambient up to 50°C (122° F), tank was planned for mesophilic operation.		
5.15	Corrosion Allowance:	Not applicable		
5.16	Tank Empty Weight:	90,017 pounds		
5.17	Jobsite Location:	Chicago, IL		
5.18	Agitator:	Roof Mounted, GAE to provide Schumann with loads and mounting requirements. Agitator provided by Others.		

Section 6 - Sealants / Gaskets / Hardware		
6.0	Roof Sealant:	Sika Flex TS +
6.1	Sidewall Sealant:	Sika Flex TS +
6.2	Hardware:	Plastic encapsulated grade 8 bolts with flat washers & hex nuts. Hardware is factory coated with plating technology designed for long life and superior corrosion protection.

GREEN ARROW ENGINEERING	**Green Era** **Equipment Spec** **Tanks**	

Section 7: Coatings		
7.0	Panel Coating:	Glasscoat Prem3 V1100: 3 Layer glasscoat ph 2-10, 1100V tested ~280mm TDF

Section 8: Tank Nozzles / Accessories		
	Qty	**Description**
8.0	1	Logo decal – allowable on sheet steel (installed on top ring)
8.1	1	Liquid tank nameplate
8.2	1	24” Diameter combination manway / pressure relief valve
8.3	1	24” Diameter shell manway with bolt-on hinged cover
8.4	1	1” Diameter 150# RFSO single flanged nozzle located in tank sidewall
8.5	5	6” Diameter 150# RFSO **double** flanged nozzle located in tank sidewall
8.6	2	1” Diameter 150# RFSO single flanged hillside nozzle located in tank roof
8.7	2	6” Diameter 150# RFSO single flanged hillside nozzle located in tank roof
8.8	2	12” Diameter 150# RFSO single flanged hillside nozzle located in tank roof
8.9	1	24” Diameter 150# RFSO single flanged nozzle located in tank roof for mixer attachment
8.10	1	1” Diameter 3000# half coupling mounted in blind flange and bolted to tank sidewall
8.11	1	Outside caged ladder with lockable hoop and (1) intermediate rest platform – OSHA – HDG – Includes safety gate at entrance point(s).
8.12	1	36” wide bar-grated walkway with handrails from eave to center working platform – (TC Standard Construction)
8.13	1	5’ x 5’ square bar-grated platform with perimeter handrails (TC Standard Construction)
8.14	2	Pie-shaped bar-grating sections on either side of walkway - HDG
8.15	1	Cross-over connection to tie-in with T-105 by catwalk.
8.16	3	Baffle plate assembly per GAE agitator spec.
8.16	Incl.	Final drawings and engineering calculations to include a **IL** P.E. stamp
8.17	Incl.	Set of blind flanges nozzles for water/hydrostat test
8.18	**Note**: 1. All nozzles 5” diameter and less - coated exterior / pipe is stainless steel 2. See submitted Green Arrow tank drawing for accessory locations.	

Section 9: Installation Services		
	Qty	**Description**
9.0	Incl.	Hydrostatic Leak Test
9.1	Incl.	Air Pressure Test – *(Water must be available and the tank must be filled to overflow level. Once the tank is filled with water, the tank will be brought to test pressure (+12 inWC) and will be expected to hold pressure for three hours and test vacuum (-2 inWC) for one hour.*

Section 10: Foundation Design		
	Qty	**Description**
10.0	-	Provided by Others.

Section 11: Insulation – by others		
	Qty	**Description**
11.0	1	Furnish and install vertical seam tank sidewall insulation, utilizing 2-inch polyisocyanurate insulation board bonded to white polyester-coated 24 ga. aluminum siding, cable stayed. Siding shall be mechanically seamed and double-folded. Furnish all flashing, fasteners, and sealant.

Section 12: Site Specific Labor Requirements				
		Yes	**No**	**Not Determined, quote both ways**
12.0	Prevailing Wage Required		X	
12.1	Union Contractors Required		X	

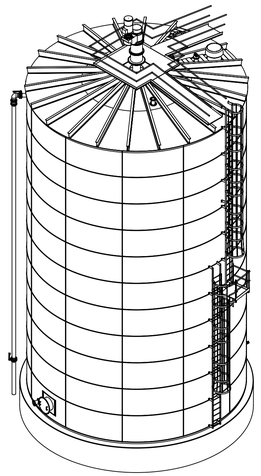

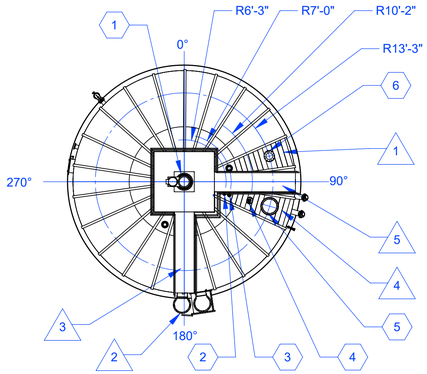

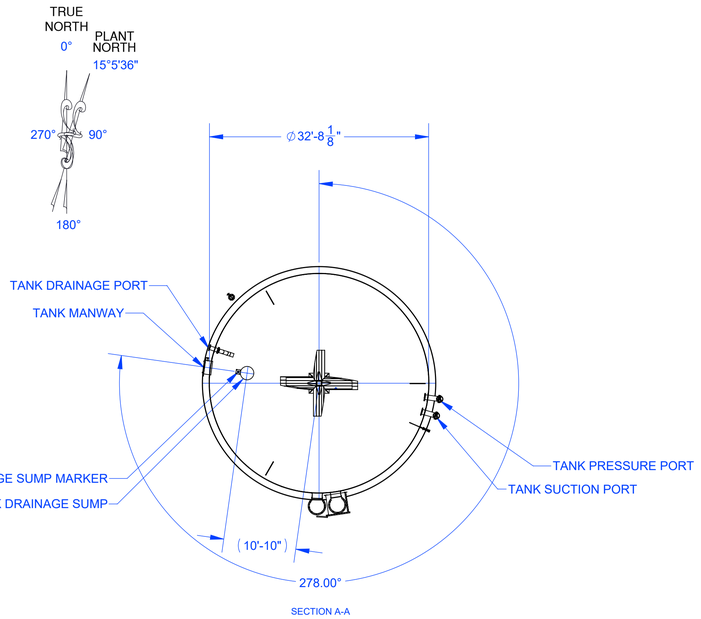

SECTION A-A

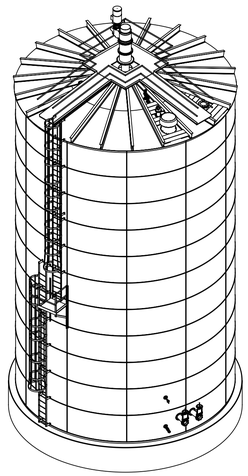

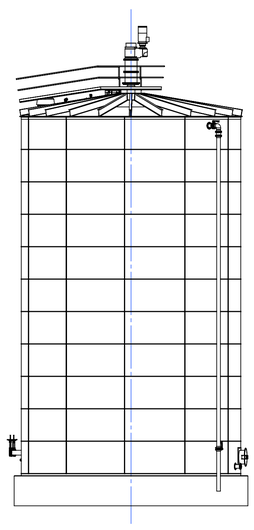

0° ELEVATION

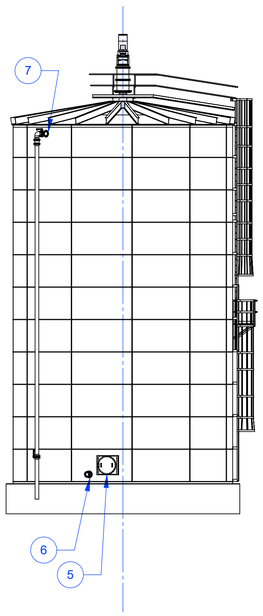

270° ELEVATION

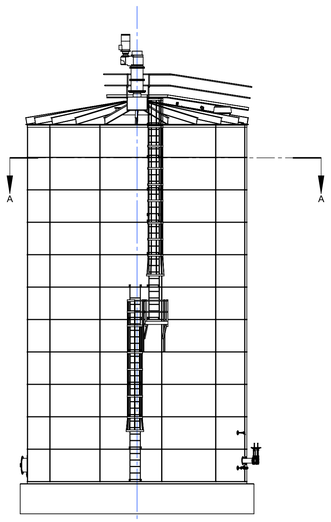

180° ELEVATION

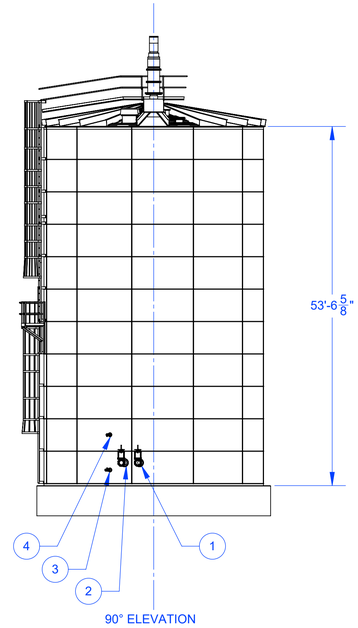

90° ELEVATION

TANK SIDEWALL PORTS (X)							
ITEM	DESCRIPTION	PORT PIPING SIZE	POLAR LOCATION	ELEVATION	IS TANK PORT DOUBLE -FLANGED?	INSIDE FLANGE LENGTH	OUTSIDE FLANGE LENGTH
1	TANK PORT - PUMP PRESSURE	8"	97.5°	3' - 5"	YES	6"	20"
2	TANK PORT - PUMP SUCTION	8"	105.5°	3' - 5"	YES	6"	20"
3	TANK PORT - PRESSURE SENSOR	1"	113.5°	2' - 4"	NO	-	7"
4	TANK PORT - TEMPERATURE SENSOR	1" NPT	113.5°	7' - 7"	NO	-	STD
5	TANK MANWAY	24"	278°	2' - 9"	NO	-	STD
6	TANK PORT - DRAINAGE	6"	288°	1' - 4 1/2"	YES	6"	10"
7	TANK PORT - GAS OUTLET	6"	314.5°	52' - 2"	YES	6"	10"

TANK ROOF PORTS (Y)						
ITEM	DESCRIPTION	PORT SIZE	POLAR LOCATION	DISTANCE FROM TANK CENTER	IS TANK PORT DOUBLE -FLANGED?	FLANGE LENGTH
1	TANK MIXER MOUNTING MANWAY	24"	CTR	CTR	-	8"
2	TANK PORT - PRESSURE SENSOR	1"	106°	6' - 3"	NO	6"
3	TANK PORT - SPARE	1"	106°	7' - 0"	NO	6"
4	TANK PORT - RADAR LEVEL SENSOR	6"	106°	10' - 2"	NO	10"
5	TANK PORT - PRESSURE RELIEF VALVE	24"	106°	13' - 3"	NO	10"
6	TANK PORT - VIEWING PORT	12"	73.25°	13' - 3"	NO	6"

TANK ACCESSORIES (A)				
ITEM	DESCRIPTION	SIZE	POLAR LOCATION	ELEVATION FROM TOP OF CONCRETE
1	ROOF PORT POCKET ANTI-SKID PLANKING WITH PERIMETER SAFETY RAIL AS REQUIRED	AS REQUIRED	73.25°	-
2	TANK LADDER w/ REST PLATFORM	AS REQUIRED	181.65°	-
3	ROOF DECKING PATH w/ HANDRAIL TO CENTER FROM CROSS-OVER PLATFORM TO TANK T-101	-	180°	-
4	ROOF PORT POCKET ANTI-SKID PLANKING WITH PERIMETER SAFETY RAIL AS REQUIRED	AS REQUIRED	106°	-
5	ROOF DECKING PATH w/ HANDRAIL TO CENTER FROM CROSS-OVER PLATFORM FROM DIGESTER TANK T-105	-	90°	-

NOTES:
DRAWING BASED ON TANK CONNECTION LIQUID STORAGE TANK
TANK DIAMETER: 32'-8 1/8"
TANK HEIGHT: 53'-6 5/8"
MATERIAL STORED: WASTEWATER
USABLE CAPACITY: 323,256 GALLONS
BASED ON: 3' FREEBOARD
SPECIFIC GRAVITY: 1.10
DESIGN CODE: AWWA D103-9
ROOF LIVE LOAD: 20 POUNDS PER SQUARE FOOT

OPERATING PRESSURE / VACUUM: +10" WATER COLUMN / -1" WATER COLUMN
(+6.000 / -0.500 OUNCES PER SQUARE INCH)

REFERENCE DQ-902-2 FOR ROOF PORT ACCESSORY DETAILS

NO.	DATE
BY	
REVISION	
NO.	DATE
BY	
REVISION	
NO.	DATE
BY	
REVISION	

GREEN ARROW ENGINEERING
1680 MADISON AVENUE
WOOSTER, OH 44691

THIS DRAWING CONTAINS VALUABLE CONFIDENTIAL AND PROPRIETARY INFORMATION THAT BELONGS TO GREEN ARROW ENGINEERING, LLC ("GAE"), AND IS SUBJECT TO A CONFIDENTIALITY AND NON-DISCLOSURE AGREEMENT. GAE IS THE AUTHOR AND OWNER OF THIS DRAWING AND RETAINS ALL COMMON LAW, STATUTORY AND OTHER RIGHTS AND PRIVILEGES WITH RESPECT HERETO, INCLUDING COPYRIGHTS. THE INFORMATION CONTAINED HEREIN MAY NOT AT ANY TIME BE USED FOR ANY UNAUTHORIZED PURPOSE, NOR REPRODUCED BY OR PROVIDED TO ANY THIRD PARTY, WITHOUT THE PRIOR WRITTEN CONSENT OF GAE.

©2015, GREEN ARROW ENGINEERING, LLC.
ALL RIGHTS RESERVED.

GREEN ERA DIGESTER FACILITY
320KGAL TANK T-100

GREEN ERA SUSTAINABILITY, LLC
850 WEST 83RD STREET
CHICAGO, IL 60620

AREA:	CHECKED BY:
	NM
JOB NO.:	DRAWN BY:
1512	BR
3/32" = 1'-0"	DATE: 11/30/2018

DWG NO.: 1512-5009-011

SHEET NO.: DQ-902-1

C:\Users\Ben\Google Drive\Sales\Era_AWC\Green Era\320kgal Tank_ASSY — Green Era 100

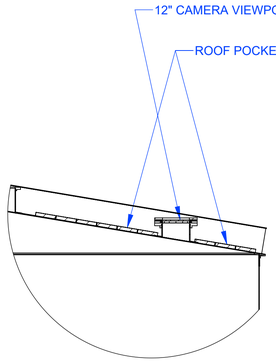

DETAIL E
SCALE 1 : 32

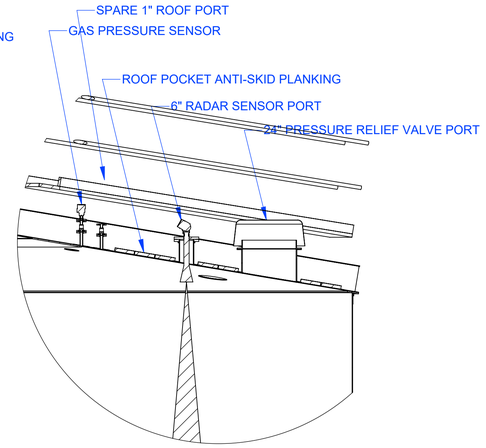

DETAIL F
SCALE 1 : 32

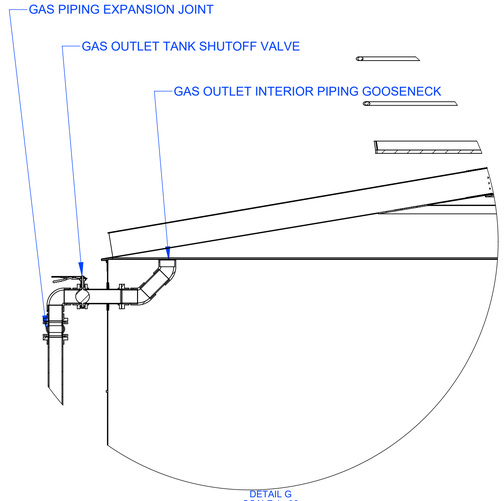

DETAIL G
SCALE 1 : 32

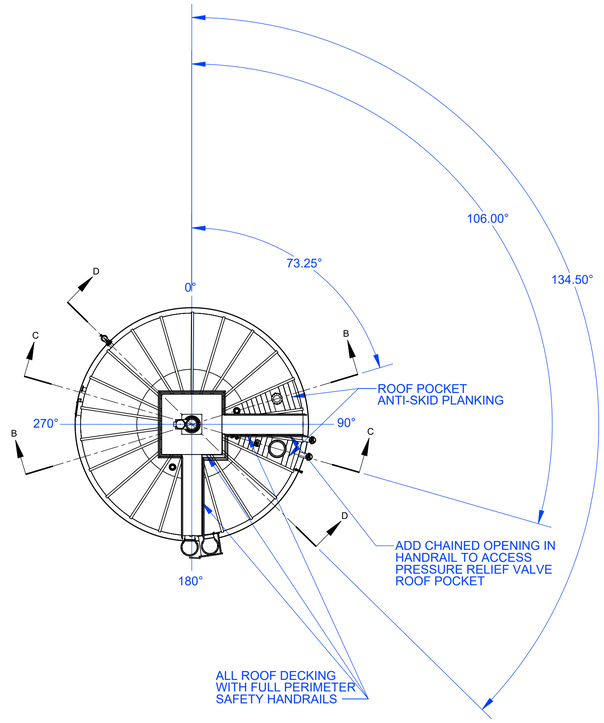

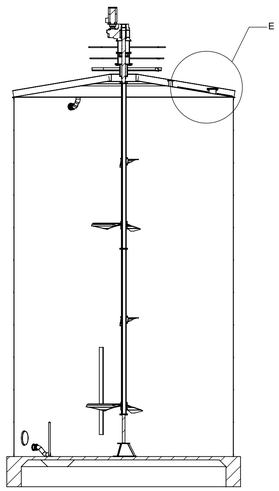

SECTION B-B

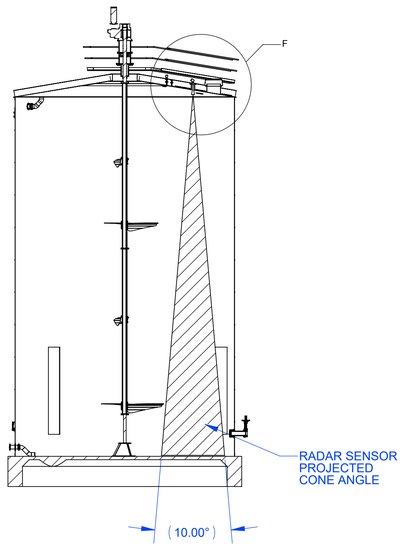

SECTION C-C

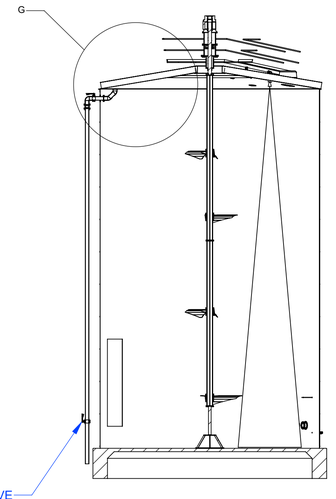

SECTION D-D

NO.	DATE
1	05MAY17
BY	
NM	
REVISION	
UPDATED BASED ON GE & T.C. DRAWINGS	
NO.	DATE
BY	
REVISION	
NO.	DATE
BY	
REVISION	

GREEN ARROW
ENGINEERING

1680 MADISON AVENUE
WOOSTER, OH 44691

THIS DRAWING CONTAINS VALUABLE CONFIDENTIAL AND PROPRIETARY INFORMATION THAT BELONGS TO GREEN ARROW ENGINEERING, LLC ("GAE"), AND IS SUBJECT TO A CONFIDENTIALITY AND NONDISCLOSURE AGREEMENT. GAE IS THE AUTHOR AND OWNER OF THIS DRAWING, AND HOLDS ALL COPYRIGHTS AND OTHER INTELLECTUAL PROPERTY RIGHTS AND PRIVILEGES WITH RESPECT HERETO, INCLUDING COPYRIGHTS. THE INFORMATION CONTAINED HEREIN MAY NOT AT ANY TIME BE USED FOR ANY UNAUTHORIZED PURPOSE, NOR REPRODUCED BY OR PROVIDED TO ANY THIRD PARTY, WITHOUT THE PRIOR WRITTEN CONSENT OF GAE.

©2015, GREEN ARROW ENGINEERING, LLC. ALL RIGHTS RESERVED.

GREEN ERA
DIGESTER FACILITY
320KGAL TANK T-100

GREEN ERA
SUSTAINABILITY, LLC
650 WEST 63RD STREET
CHICAGO, IL 60620

AREA	CHECKED BY
	NM
JOB NO.	DRAWN BY
1512	BR
SCALE	DATE
3/32" = 1'-0"	11/30/2018
DWG. NO.	
1512-5009-011	
SHEET NO.	
DQ-902-2	

C:\Users\Ben\Google Drive\Solidworks\GAE\Clients\Green Era\320kgal Tank ASSY - Green Era 100

Detail
N14 Tank to Tank Gas 6"/DN150
N15 Spare 6"/DN150
N16 Roof Hydrant 6"/DN150
N17 Viewing Port 12"/DN300

Detail
N18 Pressure Sensor 1"/DN25
N19 Spare 1"/DN25
N20 Radar Level Sensor 6"/DN150
N21 Pressure Relief Valve 24"/DN600

Detail
N22 Tank to Tank Gas 6"/DN150

Detail
N1 Spare 10"/DN250
N2 Pump Pressure 10"/DN250
N3 Pump Suction 10"/DN250

Detail
N4 Pressure Sensor 1"/DN25

Detail
N5 Temperature Sensor 1. 1"NPT/DN25
N6 Temperature Sensor 2. 1"NPT/DN25
N7 Water Inlet 1"NPT/DN25
N23 Glycol Supply Relief 1"NPT/DN25
N24 Glycol Return Relief 1"NPT/DN25

Detail
N8 Glycol Supply 4"/DN100
N9 Glycol Return 4"/DN100

Detail
N11 Drainage 6"/DN150

Detail
N12 Overflow 6"/DN150

Tank Sidewall Ports

Pos.	Number	Description	Size		Type	Height		Orientation	Inside Flange Length		Outside Flange Length		Comments
N1	1	Spare	10"	DN250	B	3'-5"	1041 mm	157,5°	6"	150 mm	10"	254 mm	
N2	1	Pump Pressure	10"	DN250	B	3'-5"	1041 mm	180°	6"	150 mm	10"	254 mm	
N3	1	Pump Suction	10"	DN250	B	3'-5"	1041 mm	188°	6"	150 mm	10"	254 mm	
N4	1	Pressure Sensor	1"	DN25	A	2'-4"	711 mm	197°	-	-	7"	180 mm	
N5	1	Temperature Sensor 1	1"NPT	DN25	A	7'-7"	2311 mm	197°	-	-	Std	Std	
N6	1	Temperature Sensor 2	1"NPT	DN25	A	26'-11"	8204 mm	197°	-	-	Std	Std	
N7	1	Water Inlet	1"NPT	DN25	A	51'-1"	15570 mm	72°	-	-	Std	Std	
N8	1	Glycol Supply	4"	DN100	B	3'-5"	1041 mm	208°	6"	150 mm	10"	250 mm	
N9	1	Glycol Return	4"	DN100	B	3'-5"	1041 mm	212°	6"	150 mm	10"	250 mm	
N10	1	Manway	32"	DN800	A	2'-9"	750 mm	330°	-	-	Std	Std	Middle Plate 2
N11	1	Drainage	6"	DN150	B	1'-4 1/2"	419 mm	322°	6"	150 mm	10"	250 mm	
N12	1	Overflow	6"	DN150	B	52'-0 7/8"	15872,5 mm	118°	6"	150 mm	10"	250 mm	
N23	1	Glycol Supply Relief	1"NPT	DN25	A	22'-0"	6705,6 mm	208°	-	-	Std	Std	
N24	1	Glycol Return Relief	1"NPT	DN25	A	22'-0"	6705,6 mm	212°	-	-	Std	Std	

Tank Roof Ports

Pos.	Number	Description	Size		Type	Radius		Orientation	Outside Flange Length		Comments
N13	2	Roof Catwalk	1000x3200		-	-	-	?°	-	-	
N14	1	Tank to Tank Gas	6"	DN150	A	8'-5 1/8"	2570 mm	73°	10"	250 mm	
N15	1	Spare	6"	DN150	A	10'-2"	3099 mm	73°	10"	250 mm	
N16	1	Roof Hydrant	6"	DN150	A	11'-5 1/2"	3492,5 mm	73°	10"	250 mm	
N17	1	Viewing Port	12"	DN300	A	14'-1 1/4"	4298 mm	73°	6"	150 mm	
N18	1	Pressure Sensor	1"	DN25	A	6'-3"	1905 mm	105°	6"	150 mm	
N19	1	Spare	1"	DN25	A	8'-2 3/8"	2500 mm	105°	6"	150 mm	
N20	1	Radar Level Sensor	6"	DN150	A	10'-2"	3099 mm	105°	10"	250 mm	
N21	1	Pressure Relief Valve	24"	DN600	A	14'-7 3/8"	4455 mm	105°	10"	250 mm	
N22	1	Tank to Tank Gas PHII	6"	DN150	A	8'-5 1/8"	2570 mm	210°	10"	250 mm	
N23	1	Mixer flange	24"	DN600	-	-	-	CTR			

Biasing forces torques

DIN EN 1993-1-8 2010-12/Tab.NA.A.2	Surface condition: hot-dip galvanized (made) + lubricated * *) Mother with molybdenum disulfide lubricant or equivalent									
▷ Screws			M12	M16	M20	M22	M24	M27	M30	M36
▷ Biasing force	Fp,c*	kN	50	100	160	190	220	290	350	510
Angular momentum method	Fvdi	kN	60	110	175	210	240	320	390	560
Modified toque method	Ma	Nm	100	250	450	650	800	1250	1650	2800

▷ Remark
For DIN EN 14399-4 / -6 / -8 the K-class K1 a uniform tightening torque in accordance with the torque tightening method applies regardless of the upper surface condition.

Corrosion protection

~~coating material~~	~~▷ SikaCor 299~~	
~~specification of set value~~	~~▷ thickness=500µm~~	
~~allowable deviations~~	~~▷ according to DIN EN ISO 12944~~	
~~ISO 8501-3~~	~~▷ Surfaces preparation before application of coating materials~~	P1 ~~P2~~ ~~P3~~
Connecting means	▷ Hot-dip galvanized / exceptions see BOMs	
Components	▷ Hot-dip galvanized / exceptions see BOMs	
	▷ coating-thicknesses according to DIN EN ISO 14713 and DIN EN ISO 1461	
ISO 8501-3	▷ Surfaces preparation before application of coating materials	P1 ~~P2~~ ~~P3~~

General comments

Execution according to DIN EN 1090-2	▷ EXC1	Permission granted: Structural engineer ☒, Client ☒, PM-internal ☒
Execution class ▷DIN EN1090-2	▷ general: EXC1 ~~EXC2~~ ~~EXC3~~	Copies in circulation: 1 ☒ 2 3 4 5 6 7 8

Material testimonies

		2.2	3.1	Not attested
DIN EN 10204	Certificates for metallic products Acceptance test certificates			
Material quality	Description of the components			
▷According to requirement	▷ Tank wall / roof (see BOM // static)			☒
▷S235JR	▷ Main beam (see BOM)			☒
▷S235JR	▷ Staircases and secondary beam (see BOM)			☒
▷S235JR	▷ All components (see BOM)			☒

Production technical regulations

DIN EN 1090-2	Tolerances	Basic tolerances	Tolerances class 1 ~~2~~
DIN EN ISO 13920	General tolerances welded constructions		~~A~~ ~~B~~ C ~~D~~ ~~E~~ ~~F~~ ~~G~~ ~~H~~
DIN EN ISO 5817	Welding - quality levels, irregularities, (supporting construct)		~~B~~ ~~C~~ D
Regulations and procedures	DIN EN ISO 4063:135 MAG	~~DIN EN ISO 4063:131 MIG~~	
base material	S 235 JR	~~1.4301 (AISI 304/304L)~~	~~1.4583 (AISI 316L)~~
filler material	DIN EN ISO 14341-G3Si1	~~DIN EN ISO 14343-A-4316~~	~~DIN EN ISO 14343-A-4430~~
Material:	S355 KTL	Welding testing	EWS/IWS
Procedures:	Lasercut		Date:
Rolling: Y ☐ N ☒	Rolling Diameter see designation		Name:

Static changes reserved.
Plate thickness according to static!

1° = U/360°
1° = 89,45 mm

Diese Zeichnung ist unser Eigentum.
Unbefugte Benutzung ist verboten
und wird gerichtlich verfolgt.

This drawing remains our property.
Its use without due authority is forbidden
and will lead to legal action.

Bezeichnung / designation:
1.0 Biomass Tank
D= 10,25 m H= 16,11 m

Maßstab / Scala : 1:10/ A3 — CE 2451

Projekt / Project: Chicago

Auftraggeber / customer: Green Arrow

Zust	Änderung/Change	Datum	Name
	Added N23 mixer flange	13.04.21	LR
	Removed Cladding Detail	16.03.21	LR
	Relabeled N1/N2/N3	16.03.21	LR
	P1/N23/N24	15.03.21	TP
	N11/N12/pipe sup./N5/N6/N7	11.03.21	TP
	CR/flanges rotated	05.03.21	TP
	Revisions 2-26-2021	03.03.21	TP
		24.02.21	TP

	Date	Name
worked on	26.01.2021	Hom
examined		
standard		

Schumann Tanks USA
Schumann Tanks USA Corp.
777 Brickell Avenue, Suite 500
Miami, FL 33131 USA

Projektnummer / project Number: 2021/006-1.0/01

V.08

Pos. 1 Glattflansch
DN 600 PN 10

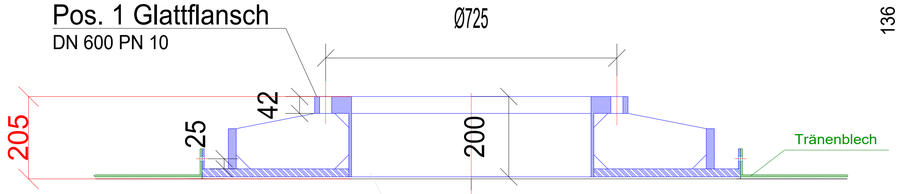

1x Pos. 2
Rohr D=610

4x Pos. 4.1
Bl.10

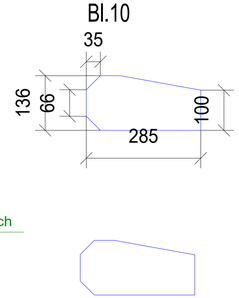

4x Pos. 4.2
Bl.10

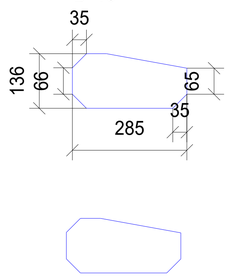

4x Pos. 5
Bl.10

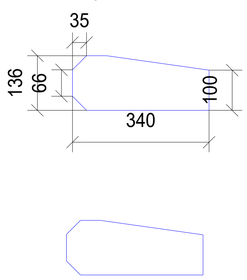

4x Pos. 6
Bl.10

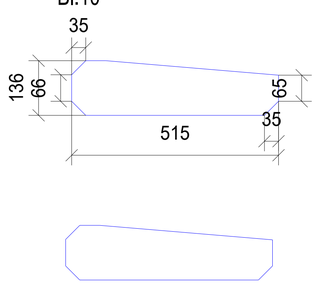

4x Pos. 7
Bl.10

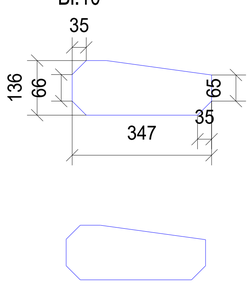

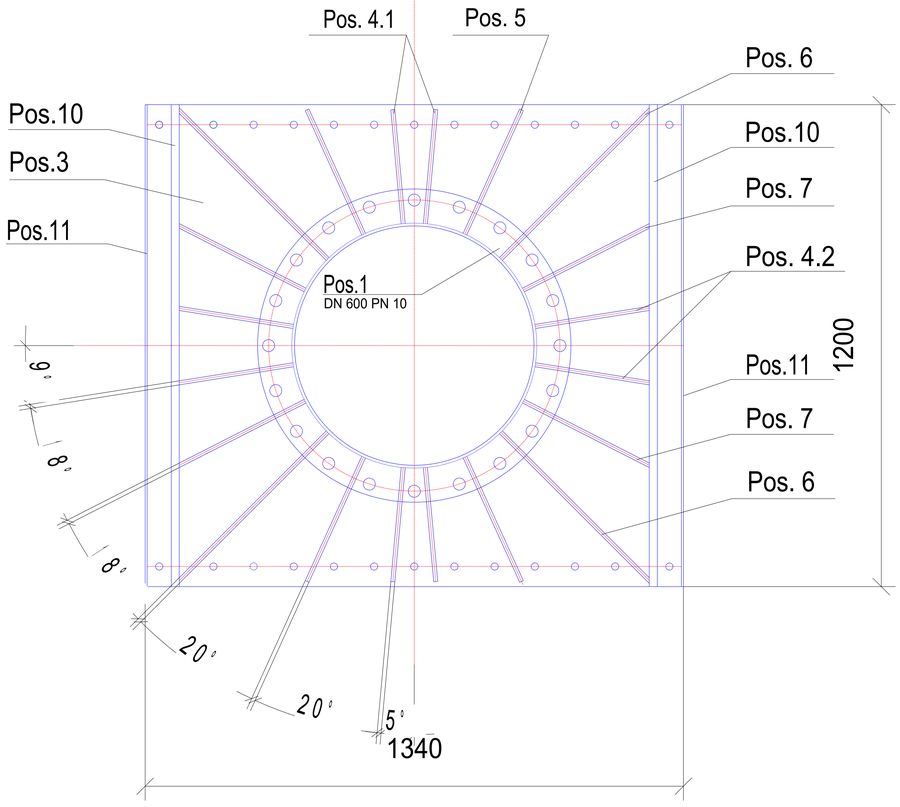

1x Pos. 3
Bl.20

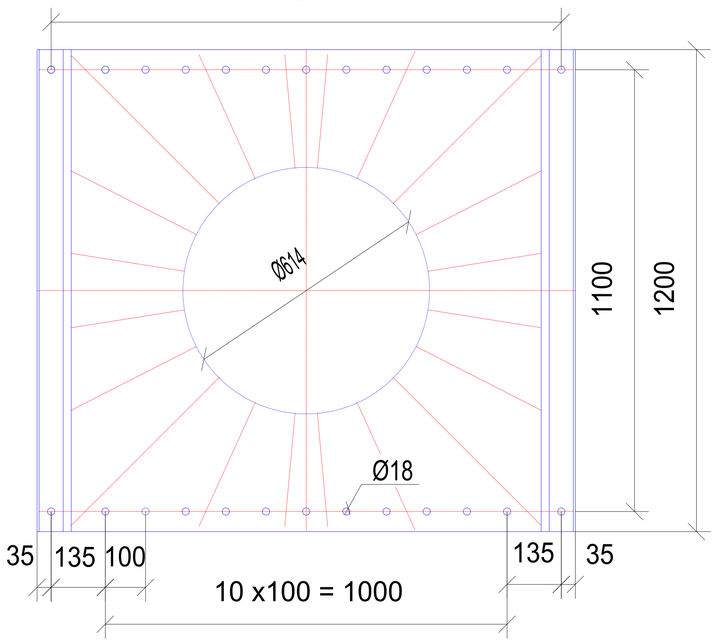

1x Pos. 3 / Laserteil
Bl.20

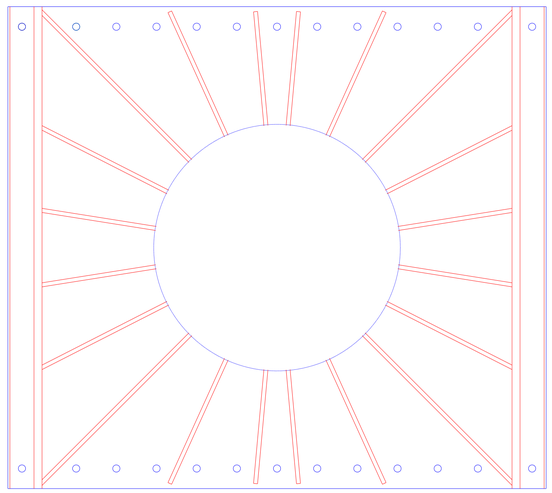

1x Pos. 2 / Rohr D=610 walzen

2x Pos.10
Fl. 100x20

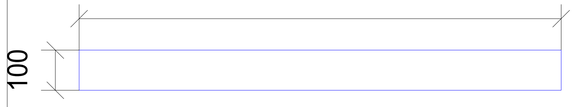

2x Pos.11
Fl. 50x5

12 x 95 = 1140

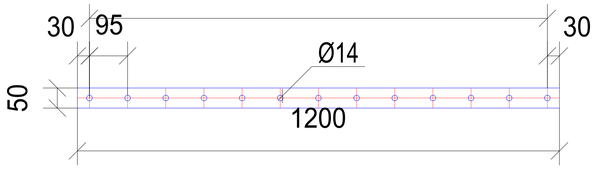

V Nähte 6mm
Kehlnähte 5mm
Bewertungsgruppe C
V Nähte sind flach einzuebnen
Allgemeintoleranz für Schweisskonstruktion nach DIN ISO 13920: Toleranzklasse C
Schweißverfahren nach DIN ISO 4063: 135
Zusatzwerkstoff: G3Si1 EN ISO
Grundwerkstoff: S235 JR
Prüfverfahren: VT,

Diese Zeichnung ist unser Eigentum.
Unbefugte Benutzung ist verboten
und wird gerichtlich verfolgt.

This drawing remains our property.
Its use without due authority is forbidden
and will lead to legal action.

designation: Rührwerksflansch DN 600/PN10

jardstick: 1:20 / A2

Project: X

customer: X

design number: X

	date	Name
worked on	13.03.14	Hom
examined		
standard		

Zust	Änderung	Datum	Name

Schumann Tanks
Schumann Tanks GmbH
Steinfeldstraße 3
D-39179 Barleben
Fon: +49(0) 39203 . 649 710

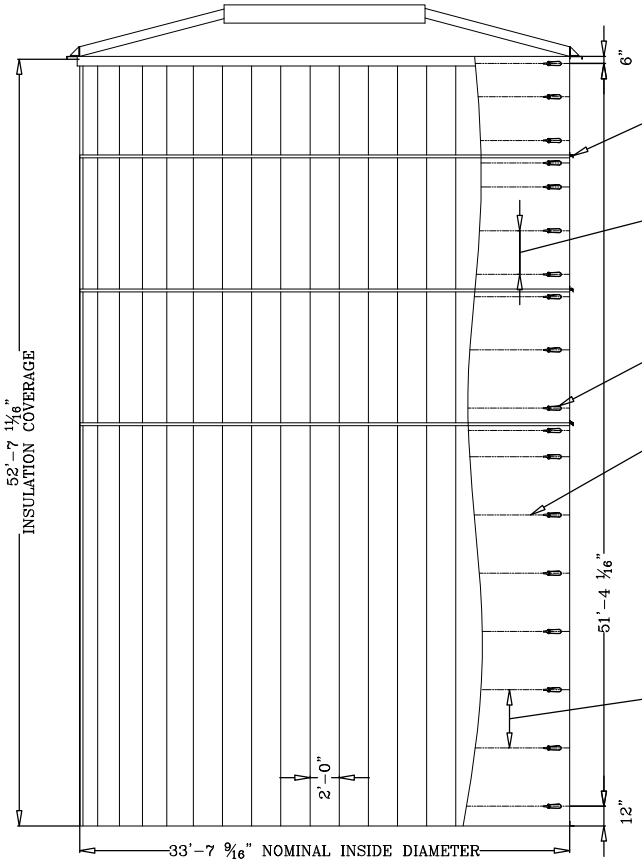

TYPICAL TANK ELEVATION
BREAKOUT TO SHOW INTERNAL SECUREMENT

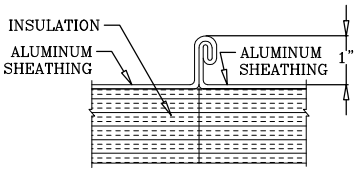

DETAIL "A"
DOUBLE FOLDED SEAM

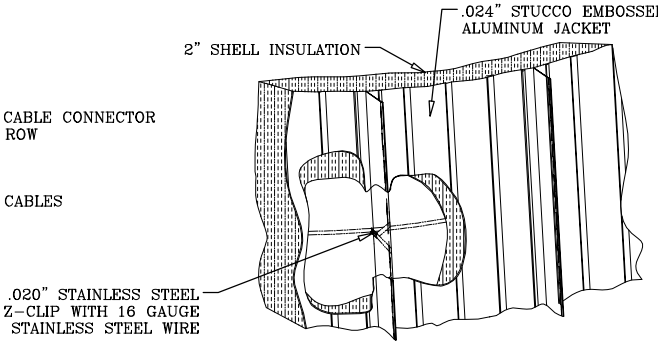

DETAIL "B"
ISO VIEW

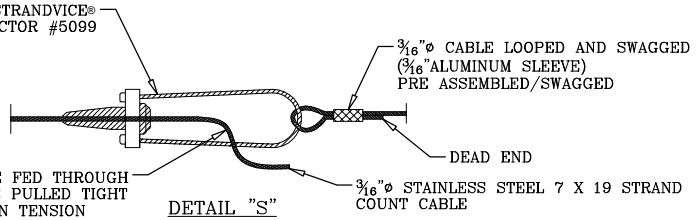

DETAIL "S"
STRANDVICE®
CONNECTION

TYPICAL SECTION AT ROOF

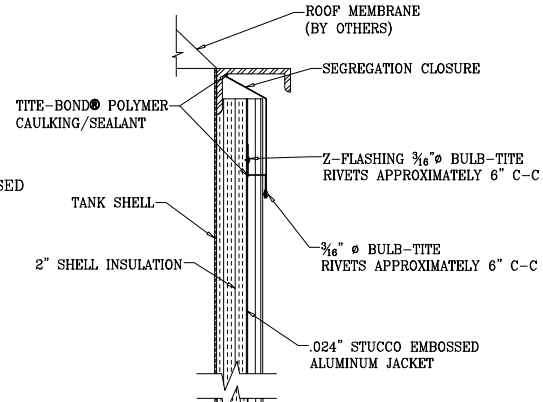

TYPICAL SECTION AT WIND STIFFENER

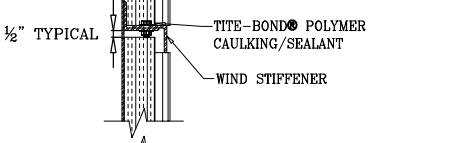

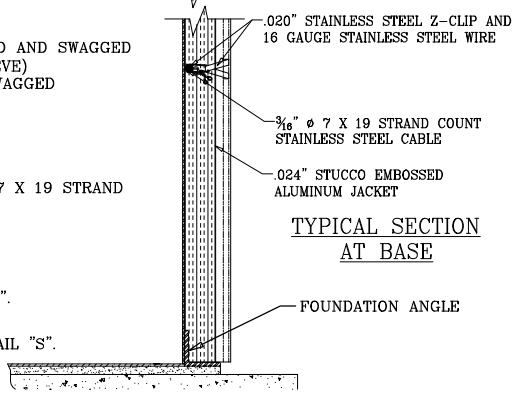

TYPICAL SECTION AT BASE

SHELL SYSTEM COMPONENTS

1. .024" STUCCO EMBOSSED ALUMINUM (REGAL WHITE) POLYESTER COATING WITH POLYISOCYANURATE FOAM –DOUBLE FOLDED VERTICAL STANDING SEAM JACKET–SEE DETAIL "A".
2. 2" THICK SHELL PANEL [R13.1] x 24" WIDE DOUBLE FOIL –FACED POLYISOCYANURATE FOAM INSULATION LAMINATED DIRECTLY TO THE JACKET.
3. 3/16"ø STAINLESS STEEL ATTACHMENT CABLES, STRAPPED TO TANK SHELL, APPROXIMATELY 4'–0" C–C: TENSIONED AND SECURED WITH HIGH STRENGTH STRANDVICE SEE DETAIL "S".
4. STAINLESS STEEL TIE WIRES ATTACHED TO CABLES WITH STAINLESS STEEL CLIPS AND SECURED WITHIN PANEL SEAMS. SEE DETAIL "B".

SUBMITTAL APPROVAL
☒ COLOR: REGAL WHITE
☐ REVISE AND RESUBMIT
☐ APPROVED WITH COMMENTS
☐ APPROVED WITH NO COMMENTS
SIGNATURE _____ DATE: _____

APPROVED
BY: NED MAST 06/21/2021

REVISION NUMBER					NOTES
1	CL	06/21/2021			CORRCTED INSULATION COVERAGE

COMPANY CONFIDENTIAL

This document containing proprietary information of Climalock, L.L.C. is transmitted to you in confidence and trust and is to be returned upon request. Its contents may not be disclosed in whole or in part to others or used for other than the purpose for which transmitted without the prior written permission of Climalock, L.L.C..

GREEN ARROW ENGINEERING
GREEN ERA DIGESTER FACILITY
CHICAGO, IL

PROJECT NO.:	DWG NO.:	OF	SCALE:	REV.:	BY:	DATE:	CHKD:	DATE:
210059	21-615GE1-1	2	NTS	1	CL	05/17/2021		

DESCRIPTION: VERTICAL STANDING SEAM SYSTEM
BOLTED STEEL (BIOMASS TANK) 33'–7 9/16"ø X 52'–10 1/16"

SHEET TITLE: GENERAL ELEVATION

CLIMALOCK, L.L.C.
34405 Highway PP
Warsaw, MO 65355
(660)438-5300
(660)438-5353

STRUCTURAL NOTES:

DESIGN PARAMETERS
THE FOLLOWING DRAWINGS ARE FOR (2) STEEL BOLTED TANKS. TANKS ARE BEING FABRICATED, AND INSTALLED BY MANUFACTURER. TANKS ARE DESIGNED BASED ON THE EUROPEAN CODES DIN EN 1991-4: 2010-12, DIN EN 1993-1-1: 2010-12, DIN EN 1993-1-8: 2010-12, AND DIN EN 1993-4-2 2017-19. SEISMIC, WIND, AND SNOW LOADS ARE BASED ON THE ASCE 7-16. SEISMIC REQUIREMENTS ARE DESIGNED TO MEET AWWA D103-09.

GENERAL
THE CONTRACTOR IS RESPONSIBLE FOR VERIFICATION AND CORRELATION OF ALL ITEMS AND WORK NECESSARY FOR COMPLETION OF THE PROJECT AS INDICATED BY THE CONTRACT DOCUMENTS. SHOULD ANY QUESTION ARISE REGARDING THE CONTRACT DOCUMENTS OR SITE CONDITIONS, THE CONTRACTOR SHALL REQUEST INTERPRETATION AND CLARIFICATION FROM THE ENGINEER BEFORE BEGINNING THE PROJECT. THE ABSENCE OF SUCH REQUEST SHALL SIGNIFY THAT THE CONTRACTOR HAS REVIEWED AND FAMILIARIZED HIMSELF WITH ALL ASPECTS OF THE PROJECT AND HAS COMPLETE COMPREHENSION THEREOF. THE CONTRACTOR SHALL BE RESPONSIBLE FOR CONFORMANCE TO ALL SAFETY REGULATIONS DURING CONSTRUCTION.

THE CONTRACT DRAWINGS AND SPECIFICATIONS REPRESENT THE FINISHED STRUCTURE. UNLESS OTHERWISE SPECIFICALLY NOTED, THEY DO NOT INDICATE THE METHOD OF CONSTRUCTION OR CONSTRUCTION LOADS. ONLY THE CONTRACTOR SHALL PROVIDE ALL METHODS, DIRECTION AND RELATED EQUIPMENT NECESSARY TO PROTECT THE STRUCTURE, WORKMEN AND OTHER PERSONS AND PROPERTY DURING CONSTRUCTION. THE CONTRACTOR SHALL, AT HIS OWN EXPENSE, ENGAGE PROPERLY QUALIFIED PERSONS TO DETERMINE WHERE AND HOW TEMPORARY PRECAUTIONARY MEASURES SHALL BE USED AND INSPECT SAME IN THE FIELD. ANY MATERIAL NOT AS SPECIFIED OR IMPROPER MATERIAL INSTALLATION OR WORKMANSHIP SHALL BE REMOVED AND REPLACED WITH SPECIFIED MATERIAL IN A WORKMANLIKE MANNER AT THE CONTRACTOR'S EXPENSE.

THESE PLANS, SPECIFICATIONS, ENGINEERING AND DESIGN WORK ARE INTENDED SOLELY FOR THE PROJECT SPECIFIED HEREIN. MILLER CONSULTING ENGINEERS DISCLAIMS ALL LIABILITY IF THESE PLANS AND SPECIFICATIONS OR THE DESIGN, ADVICE AND INSTRUCTIONS ATTENDANT THERETO ARE USED ON ANY PROJECT OR AT ANY LOCATION OTHER THAN THE PROJECT AND LOCATION SPECIFIED HEREIN. OBSERVATION VISITS TO THE JOB SITE AND SPECIAL INSPECTIONS ARE NOT PART OF THE STRUCTURAL ENGINEER'S RESPONSIBILITY UNLESS THE CONTRACT DOCUMENTS SPECIFY OTHERWISE.

NON-STRUCTURAL PORTIONS OF PROJECT, INCLUDING BUT NOT LIMITED TO PLUMBING, FIRE SUPPRESSION, ELECTRICAL, MECHANICAL, LAND USE, SITE PLANNING, EROSION CONTROL FLASHING AND WATER-PROOFING ARE BEYOND THE SCOPE OF THESE DRAWINGS AND ARE PROVIDED BY OTHERS.

TEMPORARY SHORING
WHEREVER SHORING IS REQUIRED, THE CONTRACTOR SHALL BE RESPONSIBLE FOR PROVIDING A SHORING SYSTEM THAT PREVENTS SETTLEMENT AND/OR DAMAGE TO EXISTING FACILITIES AND PROTECTS PERSONNEL, THE PUBLIC, AND THE BUILDING, SUPPORTING STREETS, WALKWAYS, UTILITIES, IMPROVEMENTS AND EXCAVATION AGAINST LOSS OF GROUND OR CAVING OF EMBANKMENTS DURING CONSTRUCTION, AS REQUIRED. THE CONTRACTOR SHALL LOCATE THE SYSTEM CLEAR WITHOUT OBSTRUCTION OF THE PERMANENT STRUCTURE AND TO PERMIT CONSTRUCTION TO PROCEED.

BUILDING CODE
ALL PHASES OF THE WORK SHALL CONFORM TO THE 2019 CHICAGO BUILDING CODE (CBC), BASED ON THE 2018 INTERNATIONAL BUILDING CODE (IBC), INCLUDING ALL REFERENCE STANDARDS, UNLESS NOTED OTHERWISE.

SPECIAL INSPECTION
SPECIAL INSPECTION AND/OR TESTING IS REQUIRED IN ACCORDANCE WITH IBC SECTION 1704. THE CONTRACTOR SHALL PROVIDE SUFFICIENT NOTICE TO ALLOW SCHEDULING OF SPECIAL INSPECTION. IT IS THE OWNER'S RESPONSIBILITY TO PROVIDE SPECIAL INSPECTION AND TESTING BY A QUALIFIED THIRD PARTY, SUCH AS A TESTING AGENCY REVIEWED BY THE ENGINEER.

INSPECTION AND TESTING OF TANKS
TEST AND INSPECT THE TANKS AS REQUIRED BY AWWA D103-09. TEST TANK TIGHTNESS WITH A TEST PRESSURE OF 12 INCHES OF WATER COLUMN (+30 MBAR) FOR THREE HOURS AND THE VACUUM PRESSURE OF -2 INCHES OF WATER COLUMN (-5 MBAR) FOR ONE HOUR. THE TANK TIGHTNESS TEST SHALL BE DONE WITH THE FULL DESIGN CONTENTS.

CONCRETE
DESIGNED BY OTHERS. FOUNDATION ANCHORAGE REQUIRES A MINIMUM COMPRESSIVE STRENGTH AT 28 DAYS, F'C = 3000 PSI.

STRUCTURAL STEEL
ALL STRUCTURAL AND MISCELLANEOUS STEEL SHALL CONFORM TO THE FOLLOWING MATERIAL STANDARDS:

W-SECTIONS:	EUROPEAN S235 (EQUIVALENT: ASTM A36)
PIPE:	EUROPEAN P235 (EQUIVALENT: ASTM A53, GRADE B, FY=35 KSI)
CHANNELS, ANGLES, BASE PLATES:	EUROPEAN S235 (EQUIVALENT: ASTM A36)
SHELL SHEETS:	EUROPEAN S355 (EQUIVALENT: ASTM A572, GRADE 50)
SHELL SHEETS (HIGH STRENGTH):	EUROPEAN S460 (EQUIVALENT: ASTM A572, GRADE 65)

UNLESS NOTED OTHERWISE, ALL BOLTS TO BE ISO R898 -
-CLASS 10.9 (MIN YIELD = 130 KSI (940 MPA), MIN TENSILE = 150 KSI (140 MPA)) WITH MATCHING NUTS.
-CLASS 8.8 (MIN YIELD = 90 KSI (640 MPA), MIN TENSILE = 110 KSI (800 MPA)) WITH MATCHING NUTS.
-A4-70 (MIN YIELD = 65 KSI (450 MPA), MIN TENSILE = 100 KSI (700 MPA)) WITH MATCHING NUTS.

UNLESS CONNECTION IS NOTED AS SLIP-CRITICAL OR PRETENSIONED, NUTS SHALL BE TIGHTENED TO A SNUG TIGHT CONDITION PER RESEARCH COUNCIL ON STRUCTURAL CONNECTIONS (RCSC) SPECIFICATION FOR STRUCTURAL JOINTS, SECTION 8.1. FOR SLIP-CRITICAL AND PRETENSIONED CONNECTIONS, INSTALLATION OF FASTENERS SHALL BE PER RCSC SECTION 8.2.

ALL STRUCTURAL STEEL SHALL HAVE ONE SHOP COAT OF PRIMER, EXCEPT SURFACES TO BE EMBEDDED IN CONCRETE OR MASONRY, OR STEEL TO BE GALVANIZED. EMBEDDED SURFACES SHALL BE FREE OF CONTAMINANTS. ALL EXPOSED STRUCTURAL STEEL TO HAVE ONE FINISH COAT OF RUST INHIBITING PAINT, COLOR BY OWNER.

ALL ZINC (GALV.) COATINGS ON IRON AND STEEL PRODUCTS SHALL CONFORM TO ASTM A123. REPAIRS OF GALVANIZED COATINGS ARE TO CONFORM TO ASTM A780. HOT DIP GALVANIZED COATINGS ON ASTM A325 FASTENER ASSEMBLIES SHALL CONFORM TO ASTM A153. SURFACE PREPARATION OF GALVANIZED STEEL TO RECEIVE A FINISH COAT OF PAINT SHALL CONFORM TO ASTM D6386.

STRUCTURAL STEEL WELDING
ALL WELDING SHALL CONFORM TO AMERICAN WELDING SOCIETY (AWS) D1.1 USING E70XX ELECTRODES. WELDING SHALL BE PERFORMED BY AWS CERTIFIED WELDERS FOR WELD TYPES SPECIFIED. WELD LENGTHS SHOWN ARE EFFECTIVE AS SPECIFIED PER THE SPECIFICATIONS OF THE AMERICAN INSTITUTE OF STEEL CONSTRUCTION (AISC). WHERE WELD LENGTHS ARE NOT SHOWN, THE WELD SHALL BE FULL LENGTH OF MEMBERS BEING JOINED. FIELD WELDING SYMBOLS HAVE NOT NECESSARILY BEEN INDICATED ON THE DRAWINGS. WHERE SHOWN, PROPER FIELD WELDING PER AWS D1.1 SHALL BE USED. WHERE NO FIELD WELDING SYMBOLS ARE SHOWN, IT IS THE CONTRACTOR'S RESPONSIBILITY TO COORDINATE THE USE OF SHOP AND FIELD WELDS.

ALL PARTIAL JOINT PENETRATION GROOVE WELD SIZES SHOWN ON THE DRAWINGS REFER TO THE EFFECTIVE THROAT THICKNESS. ALL BUTT WELDS SHALL BE FULL PENETRATION WELDS UNLESS NOTED OTHERWISE ON STRUCTURAL DRAWINGS. THE CONTRACTOR SHALL BE RESPONSIBLE FOR THE JOINT PREPARATION AND WELDING PROCEDURES THAN INCLUDE, BUT ARE NOT LIMITED TO: REQUIRED ROOT OPENINGS, ROOT FACE DIMENSIONS, GROOVE ANGLES, BACKING BARS, COPES, SURFACE ROUGHNESS VALUES, AND TAPERS AND TRANSITIONS OF UNEQUAL PARTS. ALL WELDS DENOTED AS 'DEMAND CRITICAL' SHALL BE MADE WITH A FILLER METAL CAPABLE OF PROVIDING A MINIMUM CHARPY V-NOTCH TOUGHNESS AS INDICATED IN SECTION 7.3B OF AISC 341.

ALL WELDS SHALL RECEIVE THE SAME FINISH COATING AS THE MEMBER BEING WELDED.

SCOPE
THE SCOPE OF THESE DRAWINGS INCLUDES THE DESIGN OF TWO STEEL BOLTED TANKS. THE TANKS ARE DESIGNED, FABRICATED AND INSTALLED BY SCHUMANN TANKS. TANK DESIGN IS BASED ON THE EUROPEAN STANDARDS NOTED. WHERE APPLICABLE, PROVISIONS FROM THE 2019 CHICAGO BUILDING CODE WITH MAY, 2020 SUPPLEMENT (BASED ON THE 2018 INTERNATIONAL BUILDING CODE) THAT APPLIES TO TANK DESIGN HAS BEEN INCLUDED. THIS INCLUDES DESIGN USING SEISMIC LOADING, WIND LOADING, SNOW LOADING, FLUID LOADS, LIVE LOAD, AND ANCHORAGE BASED ON THE ASCE 7-16 REQUIREMENTS.

DESIGN LOADS:

Building Code/ Reference Documents:										
AWWA D103-09 Factory-Coated Bolted Carbon Steel Tanks for Water Storage										
ASCE 7-16 Minimum Design Loads for Buildings and Other Structures										
BASIS OF STRUCTURAL DESIGN: DIN EN 1990:2010-12										
EUROCODE 1: ACTION ON STRUCTURES PART 4: SILOS AND TANKS: DIN EN 1991-4: 2010-12										
EUROCODE 3: DESIGN OF STEEL STRUCTURES- PART 1-1: GENERAL RULES AND RULES FOR BUILDINGS: DIN EN 1993-1-1: 2010-12										
EUROCODE 3: DESIGN OF STEEL STRUCTURES- PART 1-8: DESIGN OF JOINTS: DIN EN 1993-1-8:2010-12										
EUROCODE 3: DESIGN OF STEEL STRUCTURES- PART 4-2: TANKS: DIN EN 1993-4-2:2017-19										
Loading Used:	Standard Units					Metric Units				
Roof		DIGESTER TANK		BIOMASS TANK			DIGESTER TANK		BIOMASS TANK	
Snow:		24	psf	24	psf		1.15	kN/M^2	1.15	kN/M^2
Roof Live		20	psf	20	psf		0.96	kN/M^2	0.96	kN/M^2
Roof Dead		2.50	psf	2.50	psf		0.12	kN/M^2	0.12	kN/M^2
Agitator weight:		9442	lbs	7418	lbs		42	kN	33	kN
Agitator axial live:		5845	lbs	4632	lbs		26	kN	21	kN
Agitator Torque:		10252	ft lbs	6853	ft lbs		13.90	kN-m	9.02	kN-m
Agitator Bending:		10105	ft lbs	8438	ft lbs		13.70	kN-m	11.44	kN-m
Design Positive Pressures (OP)		52.20	psf	52.20	psf		2.50	kN/M^2	2.50	kN/M^2
Design Vacuum Pressures (UP)		-10.40	psf	-10.40	psf		-0.50	kN/M^2	-0.50	kN/M^2
Seismic Design Loads	Ss =	0.17	SM1 =	0.14		Ss =	0.17	SM1 =	0.14	
	S1 =	0.06	Sds =	0.18		S1 =	0.06	Sds =	0.18	
	SMS =	0.27	Sd1 =	0.09		SMS =	0.27	Sd1 =	0.09	
Response Modification Factors AWWA D103-09	Ri, Rc =	3, 1.5				Ri, Rc =	3, 1.5			
Risk Category IV (Seismic Use Group 3)										
Importance Factors										
Seismic	IE =	1.50	(Tank systems)	1.50	(Tank systems)	IE =	1.50	(Tank systems)	1.50	(Tank systems)
Snow	IS =	1.20	(snow)	1.20	(snow)	IS =	1.20	(snow)	1.20	(snow)
Wind criteria										
Wind speed:	3-sec Gust:	120	Miles/Hour	120	Miles/Hour	3-sec Gust:	193	KM/Hour	193	KM/Hour
	Exposure:	C		C		Exposure:	C		C	
Design Loads on Mat Foundations										
A. Dead Loads										
Weight of Roof:		60,140	lbs	19,547	lbs		267	kN	87	kN
Weight of Empty Cylinder above Mat Fdn:		299,968	lbs	70,470	lbs		1,334	kN	313	kN
B. Roof Snow Loads:		107,892	lbs	21,318	lbs		480	kN	95	kN
C. Roof Live Loads:		89,910	lbs	17,763	lbs		400	kN	79	kN
D. Fluid Loads:										
Weight of stored contents		14,692,145	lbs	3,017,136	lbs		65,354	kN	13,420	kN
E. Wind Loads (unfactored strength level loads based on ASCE 7-16):										
Wind shear at top of Mat Fdn:		55,168	lbs	24,185	lbs		245	kN	108	kN
Wind moment at top of Mat Fdn:		1,462,791	ft lbs	638,970	ft lbs		1,983	kN-M	866	kN-M
F. Seismic Loads (unfactored strength level loads based on ASCE 7-16):										
Seismic shear at top of Mat Fdn:		639,913	lbs	177,355	lbs		2,847	kN	789	kN
Seismic Moment at top of Mat Fdn:		21,269,775	ft lbs	3,459,166	ft lbs		16,500	kN-M	4,690	kN-M

STEEL - SPECIAL INSPECTIONS

SYSTEM OR MATERIAL	CBC CODE REFERENCE	CODE OR STANDARD REFERENCE	FREQUENCY / INSPECTION		REMARKS
			"CONTINUOUS/ PERFORM"	"PERIODIC/ OBSERVE"	
STEEL FABRICATION					
MATERIAL VERIFICATION OF STRUCTURAL STEEL COMPONENTS	"1507.4 2205.1 TABLE 1705.2 "	"ASTM A6 ASTM STANDARDS SPECIFIED IN CONSTRUCTION DOCUMENTS AISC 360 A3.1 AISC 360 N3.2"		X	CERTIFIED MILL TEST REPORTS
MATERIAL VERIFICATION OF HIGH STRENGTH BOLTS, NUTS, AND WASHERS	"1705.2.1.2 AISC 360 N5 TABLE 1705.2-2"	"AISC 360 A3.3 AISC 360 N3.2 ASTM STANDARDS SPECIFIED IN CONSTRUCTION DOCUMENTS RCSC 2.1"		X	MANUFACTURER'S CERTIFIED TEST REPORTS
CONCRETE					
POST INSTALLED MECHANICAL ANCHORS AND ADHESIVE ANCHORS IN HARDENED CONCRETE				X	

THE SCOPE OF THIS ENGINEERING STAMP IS FOR THE DESIGN OF THE FOLLOWING ITEMS:
TANK WALLS & RELATED CONNECTIONS,
ROOF FRAMING & RELATED CONNECTIONS, AND
FOUNDATION ANCHORAGE.

Drawing index:

S0.01	STRUCTURAL NOTES
1.0	BIOMASS TANK
2.0	DIGESTER TANK
01.1	CONNECTION TOP STIFFENER - DIGESTER
01.2	CONNECTION TOP STIFFENER - BIOMASS
02.1	CROWN RING - DIGESTER
02.2	CROWN RING - BIOMASS
03.1	ROOF BEAMS - DIGESTER
03.2	ROOF BEAMS - BIOMASS
04	MANWAY - TYPICAL
05	WIND STIFFENER - TYPICAL
06.1	ROOF LAYOUT - DIGESTER
06.2	ROOF LAYOUT - BIOMASS
07.1	FOUNDATION ANGLE - DIGESTER
07.2	FOUNDATION ANGLE - BIOMASS

KEVIN M. McCORMICK
081.007526
LICENSED STRUCTURAL ENGINEER
STATE OF ILLINOIS
Signed 4-30-2021
Exp 11-30-2021

COPYRIGHT 2021
Miller Consulting Engineers, Inc.

MILLER
CONSULTING
ENGINEERS
9600 SW Oak Street
Suite 400
Portland, OR 97219
Phone 503.246.1250
Fax 503.246.1395
www.miller-se.com

DIGESTER AND BIOMASS TANKS

SCHUMANN TANKS

650 W. 83RD STREET
CHICAGO, IL

DRAWN BY:	BCH
CHECKED BY:	PRA
PROJECT NO:	210059
ISSUE DATE:	04.19.21

REV.	DATE	DESCRIPTION

SHEET CONTENT
STRUCTURAL NOTES

SHEET
S0.01

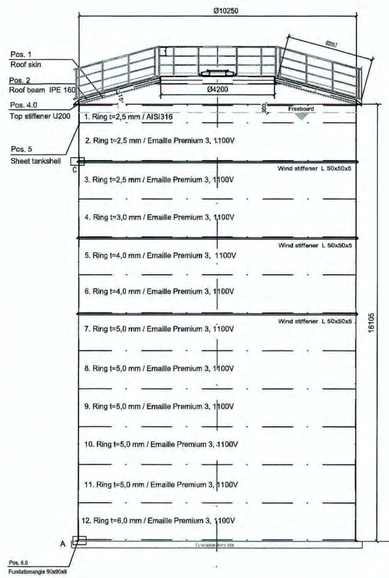

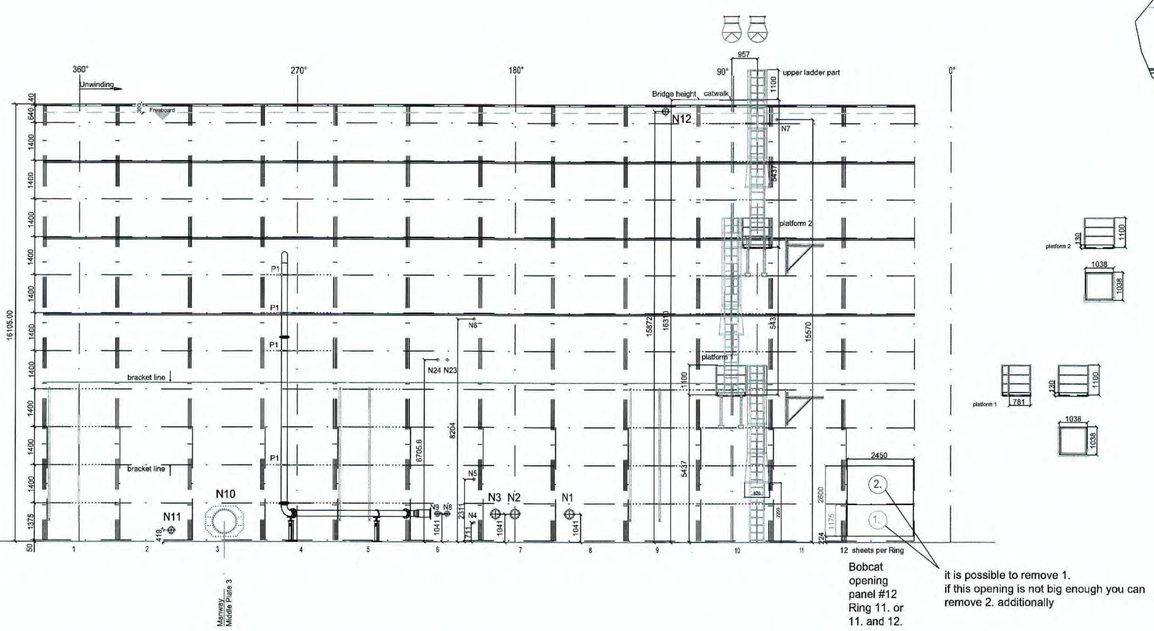

Bobcat opening panel #12 Ring 11. or 11. and 12.

it is possible to remove 1.
if this opening is not big enough you can remove 2. additionally

N7 1" NPT female thread

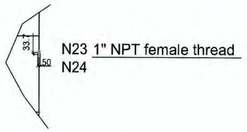

N23 1" NPT female thread
N24

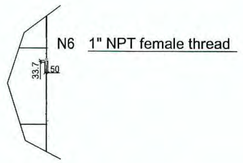

N6 1" NPT female thread

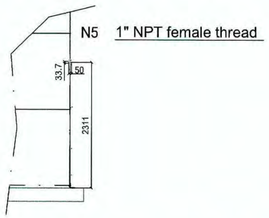

N5 1" NPT female thread

Detail M: 2:1
N5 Temperature Sensor 1. 1"NPT/DN25
N6 Temperature Sensor 2. 1"NPT/DN25
N7 Water Inlet 1"NPT/DN25
N23 Glycol Supply Relief 1"NPT/DN25
N24 Glycol Return Relief 1"NPT/DN25

Detail M: 2:1

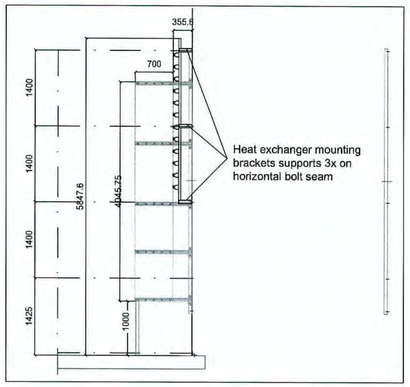

Heat exchanger mounting brackets supports 3x on horizontal bolt seam

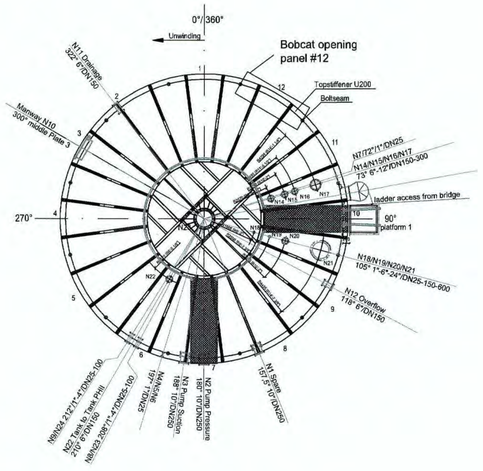

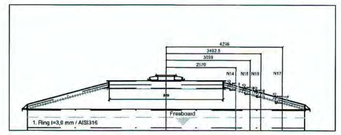

Detail
N14 Tank to Tank Gas 6"/DN150
N15 Spare 6"/DN150
N16 Roof Hydrant 6"/DN150
N17 Viewing Port 12"/DN300

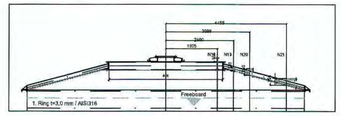

Detail
N18 Pressure Sensor 1"/DN25
N19 Spare 1"/DN25
N20 Radar Level Sensor 6"/DN150
N21 Pressure Relief Valve 24"/DN600

Detail
N22 Tank to Tank Gas 6"/DN150

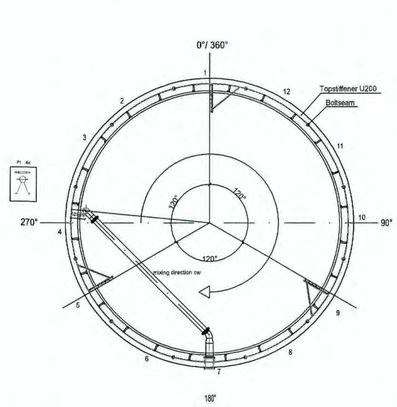

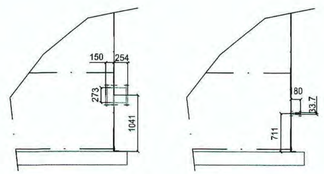

Detail M: 2:1
N1 Spare 10"/DN250
N2 Pump Pressure 10"/DN250
N3 Pump Suction 10"/DN250

Detail M: 2:1
N4 Pressure Sensor 1"/DN25

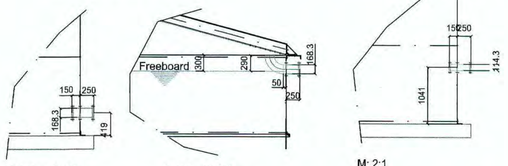

Detail M: 2:1
N11 Drainage 6"/DN150

Detail M: 2:1
N12 Overflow 6"/DN150

M: 2:1
Detail
N8 Glycol Supply 4"/DN100
N9 Glycol Return 4"/DN100

Pos.	Number	Description	Size	Type	Height		Orientation	Inside Flange Length		Outside Flange Length		Comments
N1	1	Spare	10"	DN250	B	3'-5"	1041 mm	157,5°	6"	150 mm	10"	254 mm	
N2	1	Pump Pressure	10"	DN250	B	3'-5"	1041 mm	180°	6"	150 mm	10"	254 mm	
N3	1	Pump Suction	10"	DN250	B	3'-5"	1041 mm	188°	6"	150 mm	10"	254 mm	
N4	1	Pressure Sensor	1"	DN25	A	2'-4"	711 mm	197°	-	-	7"	180 mm	
N5	1	Temperature Sensor 1	1"NPT	DN25	A	7'-7"	2311 mm	197°	-	-	Std	Std	
N6	1	Temperature Sensor 2	1"NPT	DN25	A	26'-11"	8204 mm	197°	-	-	Std	Std	
N7	1	Water Inlet	1"NPT	DN25	A	51'-1"	15570 mm	72°	-	-	Std	Std	
N8	1	Glycol Supply	4"	DN100	B	3'-5"	1041 mm	208°	6"	150 mm	10"	250 mm	
N9	1	Glycol Return	4"	DN100	B	3'-5"	1041 mm	212°	6"	150 mm	10"	250 mm	
N10	1	Manway	32"	DN800	A	2'-9"	750 mm	330°	-	-	Std	Std	Middle Plate 2
N11	1	Drainage	6"	DN150	B	1'-4 1/2"	419 mm	322°	6"	150 mm	10"	250 mm	
N12	1	Overflow	6"	DN150	B	52'-0 7/8"	15872,5 mm	118°	6"	150 mm	10"	250 mm	
N23	1	Glycol Supply Relief	1"NPT	DN25	A	22'-0"	6705,6 mm	208°	-	-	Std	Std	
N24	1	Glycol Return Relief	1"NPT	DN25	A	22'-0"	6705,6 mm	212°	-	-	Std	Std	

Tank Sidewall Ports

Pos.	Number	Description	Size	Type	Radius		Orientation	Outside Flange Length		Comments
N13	2	Roof Catwalk	1000x3200	-	-	-	?°	-	-	
N14	1	Tank to Tank Gas	6"	DN150	A	8'-5 1/8"	2570 mm	73°	10"	250 mm
N15	1	Spare	6"	DN150	A	10'-2"	3093 mm	73°	10"	250 mm
N16	1	Roof Hydrant	6"	DN150	A	11'-5 1/2"	3492,5 mm	73°	10"	250 mm
N17	1	Viewing Port	12"	DN300	A	14'-1 1/4"	4298 mm	73°	6"	150 mm
N18	1	Pressure Sensor	1"	DN25	A	5'-3"	1905 mm	105°	6"	150 mm
N19	1	Spare	1"	DN25	A	8'-2 3/8"	2500 mm	105°	6"	150 mm
N20	1	Radar Level Sensor	6"	DN150	A	10'-2"	3093 mm	105°	10"	250 mm
N21	1	Pressure Relief Valve	24"	DN600	A	14'-7 3/8"	4455 mm	105°	10"	250 mm
N22	1	Tank to Tank Gas PHII	6"	DN150	A	8'-5 1/8"	2570 mm	210°	10"	250 mm
N23	1	Mixer flange	24"	DN600	-	-	-	CTR		

Tank Roof Ports

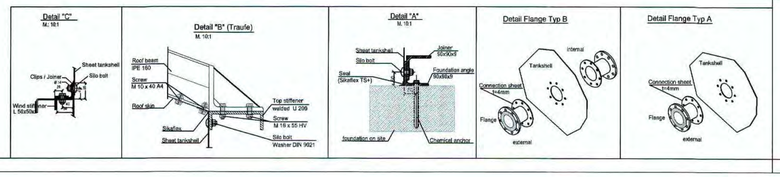

Biasing forces torques	DIN EN 1993-1-8 2010-12/Tab.NA.A.2	Surface condition: hot-dip galvanized (made) ÷ lubricated * *) Mother with molybdenum disulfide lubricant or equivalent									Remark
	Screws			M12	M16	M20	M22	M24	M27	M30	M36	For DIN EN 14399-4 / -6 / -8 the K-class K1 a uniform tightening torque in accordance with the torque tightening method applies regardless of the upper surface condition.
	Biasing force	Fp,c*	kN	50	100	160	190	220	290	350	510	
	Angular momentum method	Fvdi	kN	60	110	175	210	240	320	390	560	
	Modified toque method	Ma	Nm	100	250	450	650	800	1250	1650	2800	
Corrosion protection	coating material	SikaCor-200										
	specification of set value	thickness>500µm										
	allowable deviations	according to DIN EN ISO 12944										
	ISO 8501-3	Surfaces preparation before application of coating materials										PI / Sa 2½
	Connecting means	Hot-dip galvanized f exceptions see BOMs										
	Components	Hot-dip galvanized f exceptions see BOMs										
		coating thicknesses according to DIN EN ISO 14713 and DIN EN ISO 1461										
	ISO 8501-3	Surfaces preparation before application of coating materials										PI / Sa 2½
General comments	Execution according to DIN EN 1090-2	EXC1										Permission granted: Structural engineer / Client / PM-internal
	Execution class DIN EN 1090-2	general	EXC1	EXC2	EXC3							Copies in circulation: 1 2 3 4 5 6 7 8
Material testimonies	DIN EN 10204	Certificates for metallic products Acceptance test certificates										2.2 / 3.1 attached
	Material quality	Description of the components										
	According to requirement	Tank wall / roof (see BOM // static)										
	S235JR	Main beam (see BOM)										
	S235JR	Staircases and secondary beam (see BOM)										
	S235JR	All components (see BOM)										
Production technical regulations	DIN EN 1090-2	Tolerances	Basic tolerances						Tolerances class			1 / 2
	DIN EN ISO 13920	General tolerances welded constructions							B C D			B / C / D
	DIN EN ISO 5817	Welding - quality levels, irregularities, (supporting construct)										B / C / D
	Regulations and procedure		DIN EN ISO 4063-135: MAG					DIN EN ISO 4063-131: MIG				
	base material:		S 235 JR					1.4301 (AISI 305/304L)				1.4404 (AISI 316L)
	filler material:		DIN EN ISO 14341: G3Si1					DIN EN ISO 14343 A: 4316				DIN EN ISO 14343 A: 4430
	Material:	...						Welding testing	EWS/IWS			
	Procedures:	Eawcon							Date:			
	Rolling: Y ☐ N ☒	Rolling Diameter see designation:							Name:			

Static changes reserved.
Plate thickness according to static!

1° = U/360°
1° = 89,45 mm

Diese Zeichnung ist unser Eigentum. Unbefugte Benutzung ist verboten und wird gerichtlich verfolgt.

This drawing remains our property. Its use without due authority is forbidden and will lead to legal action.

THE SCOPE OF THIS ENGINEERING STAMP IS FOR THE DESIGN OF THE FOLLOWING ITEMS:
TANK WALLS & RELATED CONNECTIONS,
ROOF FRAMING & RELATED CONNECTIONS, AND
FOUNDATION ANCHORAGE.

KEVIN M. McCORMICK 081.007526 LICENSED STRUCTURAL ENGINEER STATE OF ILLINOIS
Signed 4-30-2021
Exp. 11-30-2021

MILLER CONSULTING ENGINEERS

Bezeichnung / designation:
1.0 Biomass Tank
D= 10,25 m H= 16,11 m

Maßstab / Scale: 1:100 / Architectural D CE 2451

Projekt / Project: Chicago

Kunde / customer: Green Arrow

Zeichnungs-Nr. / design number: 2021/006-1.0/01 V.09

	Änderung/Change	Datum	Name
V. 09	Changed size to Arch D	27.04.21	LR
V. 08	Added N23 mixer flange	13.04.21	LR
V. 07	Removed Cladding Detail	16.03.21	LR
V. 06	Relabeled N1/N2/N3	16.03.21	LR
V. 05	P1/N23/N24	15.03.21	TP
V. 04	N11/N12pipe size/N5/N6/N7	11.03.21	TP
V. 03	CR/flanges rotated	05.03.21	TP
V. 02	Revisions 2-26-2021	03.03.21	TP

	Datum / Date	Name
worked on	26.01.2021	Hom
examined		
standard		

Schumann Tanks USA
Schumann Tanks USA Corp.
777 Brickell Avenue, Suite 500
Miami, FL 33131 USA

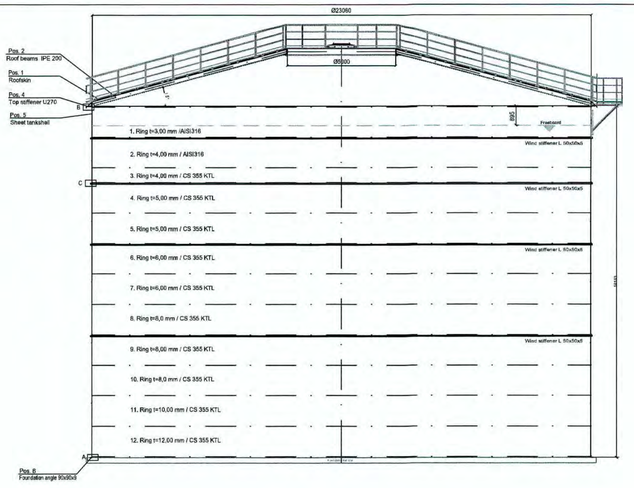

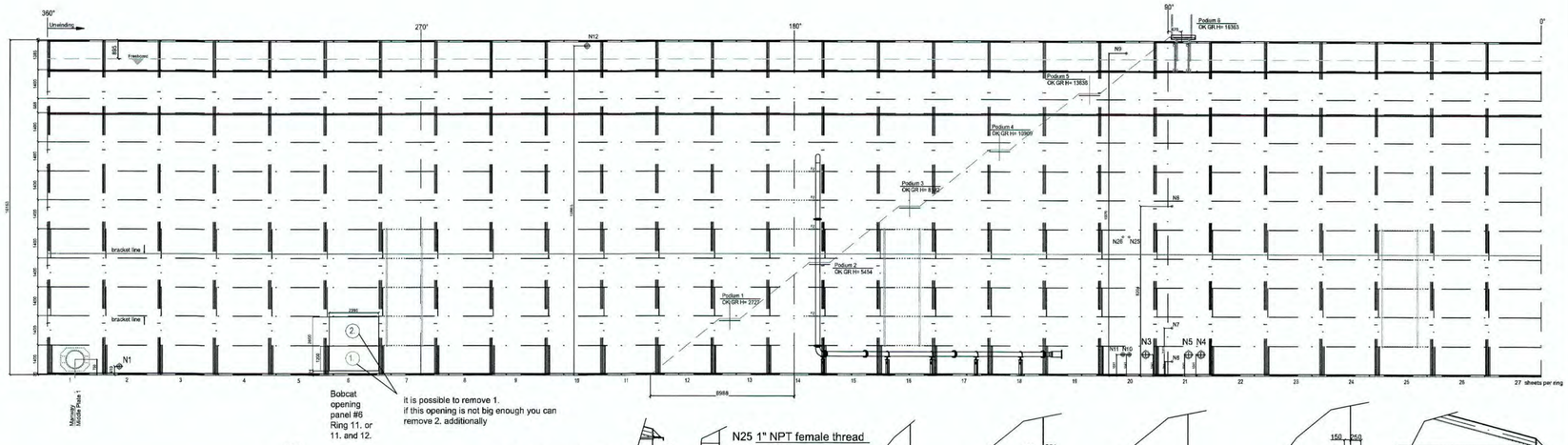

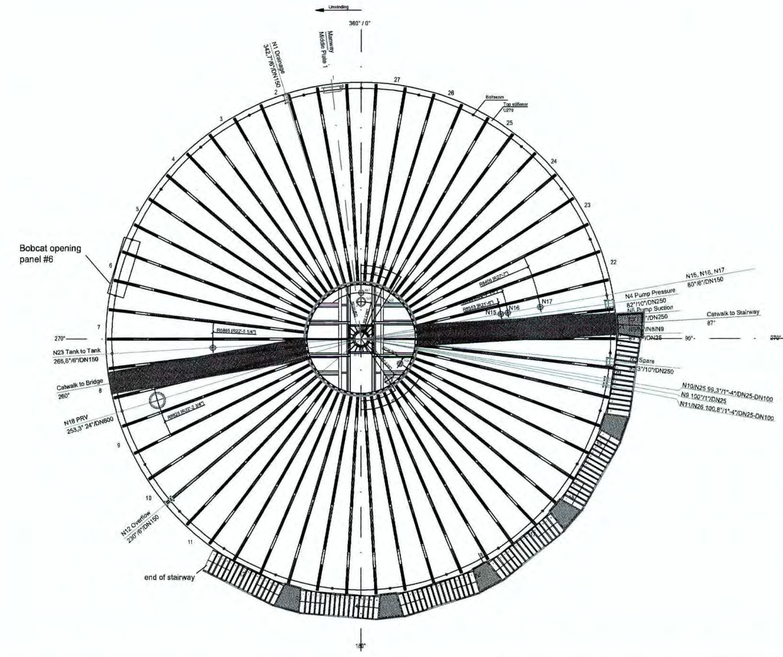

1" NPT female thread

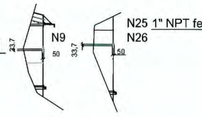

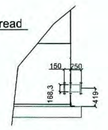

Detail M: 2:1
N1 Drainage 6"/DN150

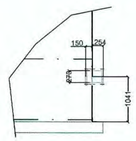

Detail M: 2:1
N3 Spare 10"/DN250
N4 Pump Pressure 10"/DN250
N5 Pump Suction 10"/DN250

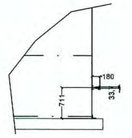

Detail M: 2:1
N6 Level Pressure Sensor 1"/DN25

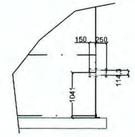

Detail M: 2:1
N10 Glycol Supply 4"/DN100
N11 Glycol Return 4"/DN100

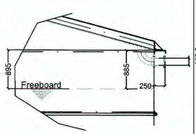

Detail M: 2:1
N12 Overflow 6"/DN150

N8 1" NPT female thread

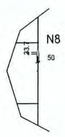

N7 1" NPT female thread

Detail M: 2:1
N7 Temperature Sensor 1. 1"NPT/DN25
N8 Temperature Sensor 2. 1"NPT/DN25
N9 Water Inlet 1"NPT/DN25
N25 Glycol Supply Manifold Relief 1"NPT/DN25
N26 Glycol Return Manifold Relief 1"NPT/DN25

Detail M: 2:1
N19 Roof Hydrant 6"/DN150
N20 Viewing Port 12"/DN300

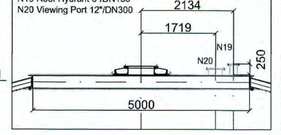

Detail M: 2:1
N21 Gas Pressure 1. 1"/DN25
N22 Gas Pressure 2. 1"/DN25

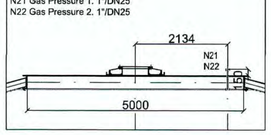

Detail M: 2:1
N24 Gas Outlet 2. 6"/DN150

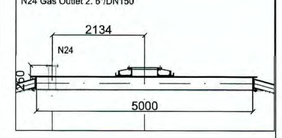

Detail M: 2:1
N14 Gas Outlet 2. 10"/DN250

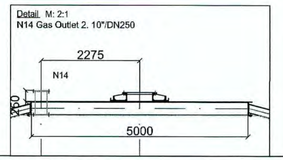

THE SCOPE OF THIS ENGINEERING STAMP IS FOR THE DESIGN OF THE FOLLOWING ITEMS:
TANK WALLS & RELATED CONNECTIONS,
ROOF FRAMING & RELATED CONNECTIONS, AND
FOUNDATION ANCHORAGE.

MILLER CONSULTING ENGINEERS

KEVIN M. McCORMICK
081.007526
LICENSED STRUCTURAL ENGINEER
STATE OF ILLINOIS
Signs 4-30-2021
Exp. 11-30-2022

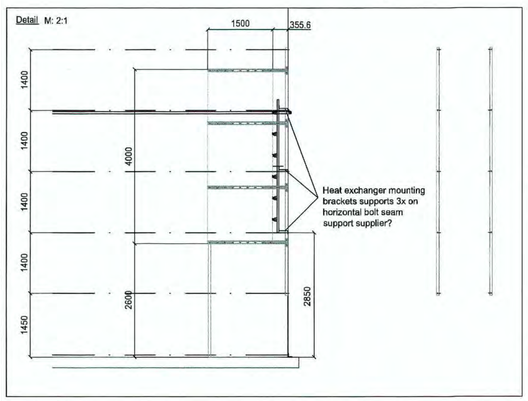

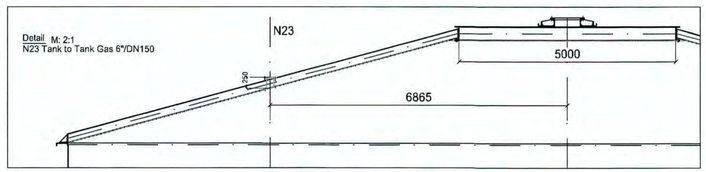

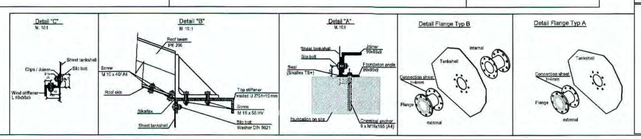

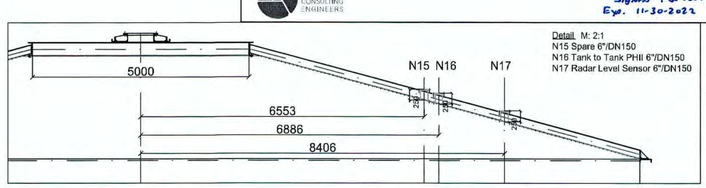

Tank Sidewall Ports

Pos.	Number	Description	Size	Type	Height	Orientation	Inside Flange Length		Outside Flange Length		Comments
N1	1	Drainage	6"	DN150	B 1'-4 1/2"	419 mm	342,7°	6"	150 mm	10°	250 mm	
N2	1	Manway	32"	DN600	A 2'-5"	750 mm	353,3°	-	-	Std	Std	Middle Plate 2
N3	1	Spare	10"	DN250	B 3'-5"	1041 mm	95,3°	6"	150 mm	10°	254 mm	
N4	1	Pump Pressure	10"	DN250	B 3'-5"	1041 mm	82°	6"	150 mm	10°	254 mm	
N5	1	Pump Suction	10"	DN250	B 3'-5"	1041 mm	85°	6"	150 mm	10°	254 mm	
N6	1	Level Pressure Sensor	1"	DN25	A 2'-4"	711 mm	89°	-	-	7°	180 mm	
N7	1	Temperature Sensor 1	1"NPT	DN25	A 7'-7"	2311 mm	89°	-	-	Std	Std	
N8	1	Temperature Sensor 2	1"NPT	DN25	A 26'-11"	8204 mm	89°	-	-	Std	Std	
N9	1	Water Inlet	1"NPT	DN25	A 5'-1"	1570 mm	109°	-	-	Std	Std	
N10	1	Glycol Supply	4"	DN100	B 3'-5"	1041 mm	99,3°	6"	150 mm	10°	250 mm	
N11	1	Glycol Return	4"	DN100	B 3'-5"	1041 mm	100,8°	6"	150 mm	10°	250 mm	
N12	1	Overflow	6"	DN150	B 52'-3 1/2"	15900,8 mm	230°	6"	150 mm	10°	250 mm	
N25	1	Glycol Supply Manifold Relief	1"NPT	DN25	A 22'-0"	6705,6 mm	99,3°	-	-	Std	Std	
N26	1	Glycol Return Manifold Relief	1"NPT	DN25	A 22'-0"	6705,6 mm	100,8°	-	-	Std	Std	

Tank Roof Ports

Pos.	Number	Description	Size	Type	Radius	Orientation	Outside Flange Length		Comments
N13	1	Mixer flange	24"	DN600		CTR			
N14	1	Gas Outlet 1	10"	DN250	A 7'-5 5/8"	2279 mm	146,3°	16°	250 mm
N15	1	Spare	6"	DN150	A 21'-8"	6553 mm	89°	16°	250 mm
N16	1	Tank to Tank Gas PHII	6"	DN150	A 22'-7 1/8"	6886 mm	89°	16°	250 mm
N17	1	Radar Level Sensor	6"	DN150	A 27'-7"	8406 mm	89°	16°	250 mm
N18	1	Pressure Relief Valve	24"	DN600	A 32'-2 3/4"	9825 mm	253,3°	16°	250 mm
N19	1	Roof Hydrant	6"	DN150	A 7'-0"	2134 mm	0°	16°	250 mm
N20	1	Viewing Port	12"	DN300	A 5'-7 5/8"	1719 mm	0°	6°	150 mm
N21	1	Gas Pressure 1	1"	DN25	A 7'-0"	2134 mm	22,5°	6°	150 mm
N22	1	Gas Pressure 2	1"	DN25	A 7'-0"	2134 mm	337,5°	6°	150 mm
N23	1	Tank to Tank Gas	6"	DN150	A 22'-6 1/4"	6865 mm	266,6°	16°	250 mm
N24	1	Gas Outlet 2	6"	DN150	A 7'-0"	2134 mm	122,3°	16°	250 mm

		DIN EN 1993-1-8 2010-12/Tab.NA.A.2	Surface condition: hot-dip galvanized (made) + lubricated * *) Mother with molybdenum disulfide lubricant or equivalent								▷ Remark
Blassing forces torques	▷ Screws			M12	M16	M20	M22	M24	M27	M30	M36	For DIN EN 14399-4 / -6 / -8 the K-class K1 a uniform tightening torque in accordance with the torque tightening method applies regardless of the upper surface condition.
	▷ Blassing force	Fp,c*	kN	50	100	160	190	220	290	350	510	
	Angular momentum method	Fvdi	kN	60	110	175	210	240	320	390	560	
	Modified toque method	Ma	Nm	100	250	450	650	800	1250	1650	2800	
Corrosion protection	coating material	▷ SikaCor 290										
	specification of set value	▷ thickness=500µm										
	allowable deviations	▷ according to DIN EN ISO 12944										
	ISO 8501-3	▷ Surfaces preparation before application of coating materials										PI
	Connecting means	▷ Hot-dip galvanized / exceptions see BOMs										
	Components	▷ Hot-dip galvanized / exceptions see BOMs										
		▷ coating thicknesses according to DIN EN ISO 14713 and DIN EN ISO 1461										
	ISO 8501-3	▷ Surfaces preparation before application of coating materials										PI
General comments	Execution according to DIN EN 1090-2	▷ EXC1										Permission granted: Structural engineer / Client / PM-internal
	Execution class ▷DIN EN1090-2	▷ general	EXC1	EXC2	EXC3							Copies in circulation: 1 2 3 4 5 6 7 8
Material testimonies	DIN EN 10204	Certificates for metallic products Acceptance test certificates										2.2 / 3.1 / Not affected
	Material quality	Description of the components										
	▷According to requirement	▷ Tank wall / roof (see BOM // static)										
	▷S235JR	▷ Main beam (see BOM)										
	▷S235JR	▷ Staircases and secondary beam (see BOM)										
	▷S235JR	▷ All components (see BOM)										
Production technical regulations	DIN EN 1090-2	Tolerances	Basic tolerances						Tolerances class			1
	DIN EN ISO 13920	General tolerances welded constructions										A B C D
	DIN EN ISO 5817	Welding - quality levels, irregularities, (supporting construct)										B C D
	Regulations and procedure		DIN EN ISO 4063 135 MAG				DIN EN ISO 4063 131 MIG				DIN EN ISO 4063 131 MIG	
	base material		S 235 JR				1.4301 (AISI 304/304L)				1.4462 (AISI 316L)	
	filler material		DIN EN ISO 14341 G3Si1				DIN EN ISO 14343 A 4319				DIN EN ISO 14343 A 4462	
	Material:		...			Welding testing	EWS/IWS					
	Procedures:		Datarcon				Date:					
	Rolling: Y ☐ N ☒	Rolling Diameter see designation					Name:					

Static changes reserved.
Plate thickness according to static!

1° = U/360°
1° = 201,23 mm

Diese Zeichnung ist unser Eigentum.
Unbefugte Benutzung ist verboten
und wird gerichtlich verfolgt.

This drawing remains our property.
Its use without due authority is forbidden
and will lead to legal action.

Bezeichnung / designation:
2.0 Anaerobic Digester
D= 23,06 m H= 16,17 m

Maßstab / Scala: 1:125 / Architectural D
CE 2451

Projekt / Project:
Chicago

Kunde / customer:
Green Arrow

	Änderung/Change	Datum	Name
V. 07	Changed size to Arch D	27.04.21	LR
V. 06	Removed Cladding Detail	16.03.21	LR
V. 05	Relabeled N3/N4/N5	16.03.21	LR
V. 04	P2/N25/NDIN/NN1/N2	15.03.21	TP
V. 03	P2/N12/N7/N8/N9	11.03.21	TP
	Staircase	09.03.21	Hom
V. 02	Revisions 2-26-2021	05.03.21	TP
		15.02.21	TP

Datum / Date: Name
worked on
examined
standard

Schumann Tanks USA
Schumann Tanks USA Corp.
777 Brickell Avenue, Suite 500
Miami, FL 33131 USA

Zeichnungs-Nr. / design number:
2021/006-1.0/01
V.07

Pos. 2 / Top stiffener
D=23.06 m

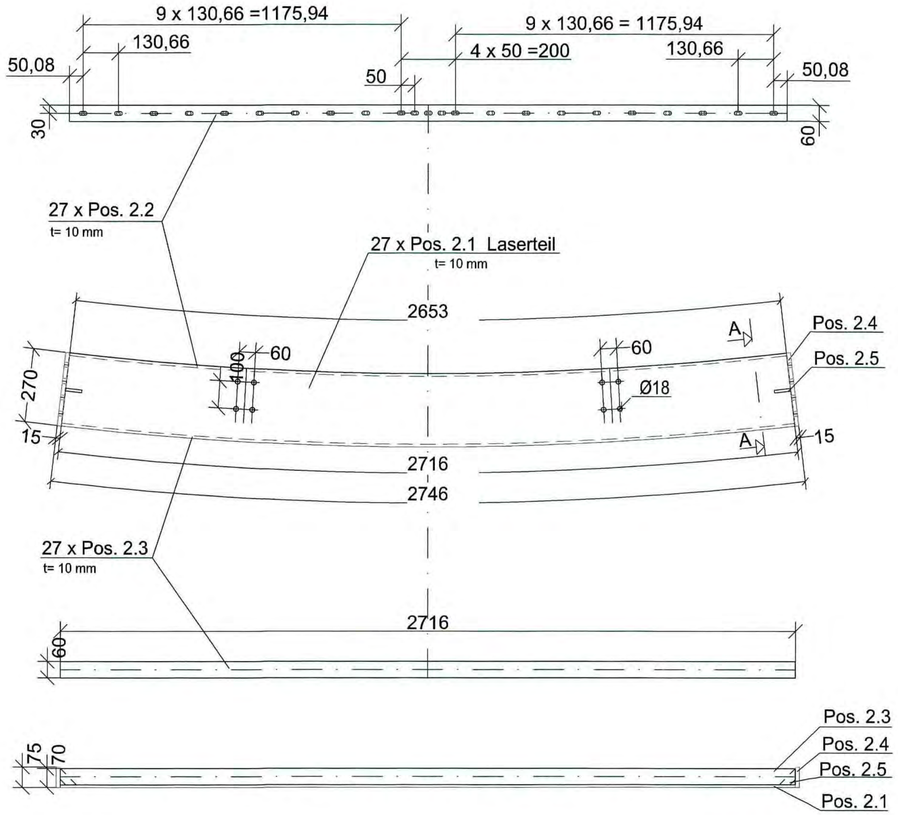

Connection top stiffener

M. 2:1

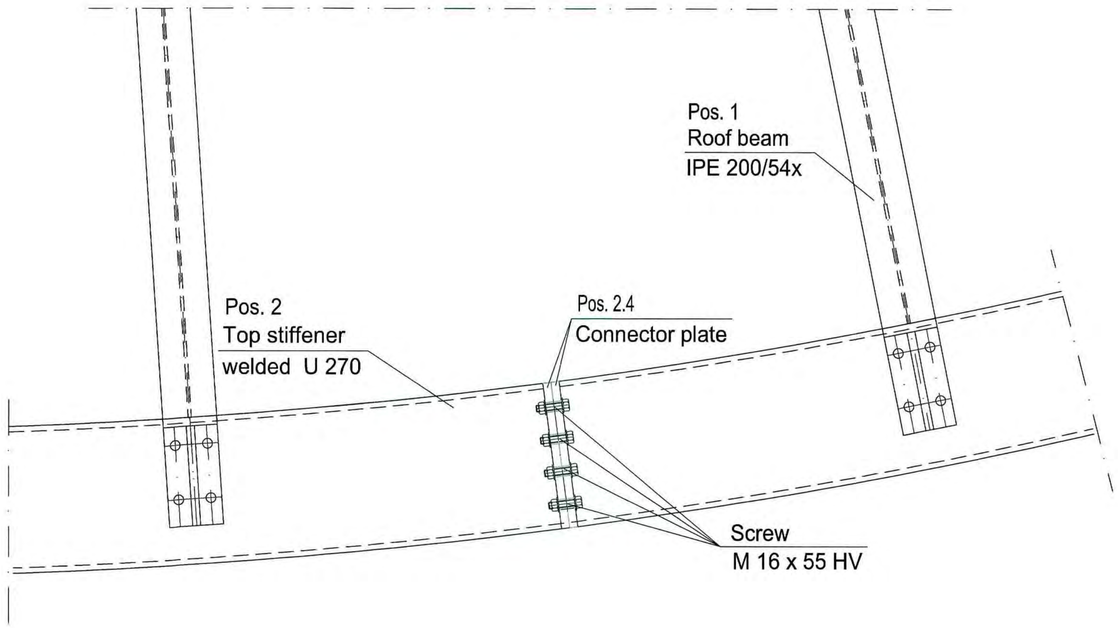

Schnitt A-A

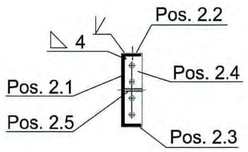

54 x Pos. 2.5
t= 10 mm

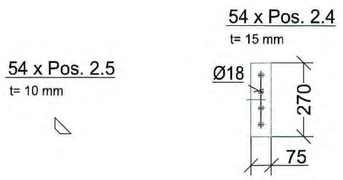

THE SCOPE OF THIS ENGINEERING STAMP IS FOR THE DESIGN OF THE FOLLOWING ITEMS:
TANK WALLS & RELATED CONNECTIONS,
ROOF FRAMING & RELATED CONNECTIONS, AND
FOUNDATION ANCHORAGE.

KEVIN M. McCORMICK
081.007526
LICENSED STRUCTURAL ENGINEER
STATE OF ILLINOIS
Signed 4-30-2021
Exp. 11-30-2022

MILLER CONSULTING ENGINEERS

Diese Zeichnung ist unser Eigentum.
Unbefugte Benutzung ist verboten
und wird gerichtlich verfolgt.

This drawing remains our property.
Its use without due authority is forbidden
and will lead to legal action.

Bezeichnung / designation:	Connection Top Stiffener - Roof Beam D=23.06m
Maßstab / Scale:	1:10 / Architectural D
Projekt / Project:	Chicago
Kunde / customer:	Green Arrow
Drawing Index:	01.1
Zeichnungs-Nr. / design number:	2021/006-1.0 - 01
	V.01

	Datum /Date	Name
worked on	03.30.2021	LR
examined		
standard		

Schumann Tanks USA
Schumann Tanks USA Corp
777 Brickell Avenue, Suite 500
Miami, FL 33131-USA

Zust.	Änderung/Change	Datum	Name

Pos. 2 / Top stiffener
D=10.25 m

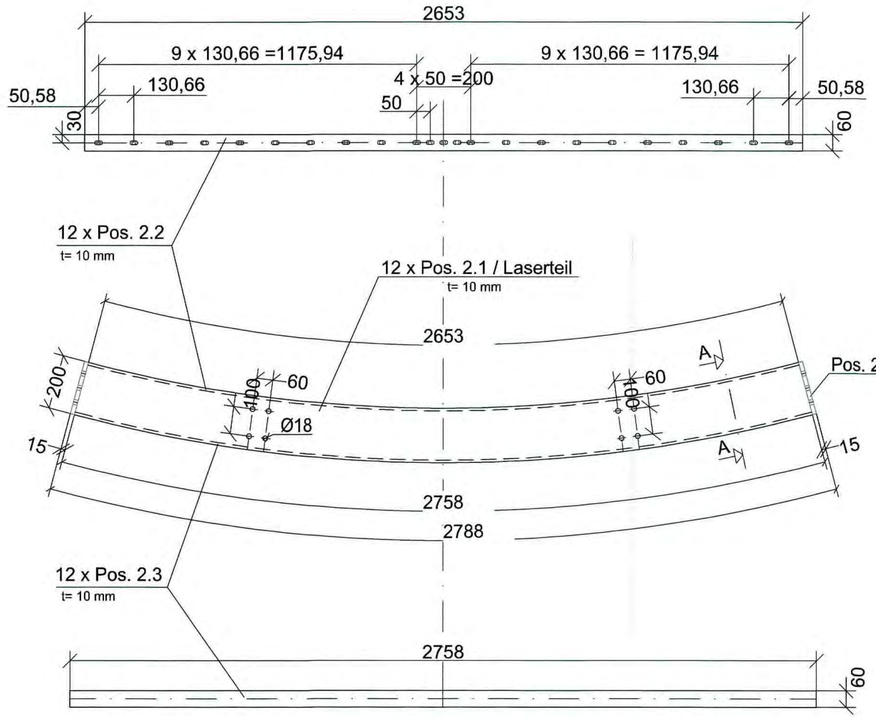

Connection top stiffener

M. 2:1

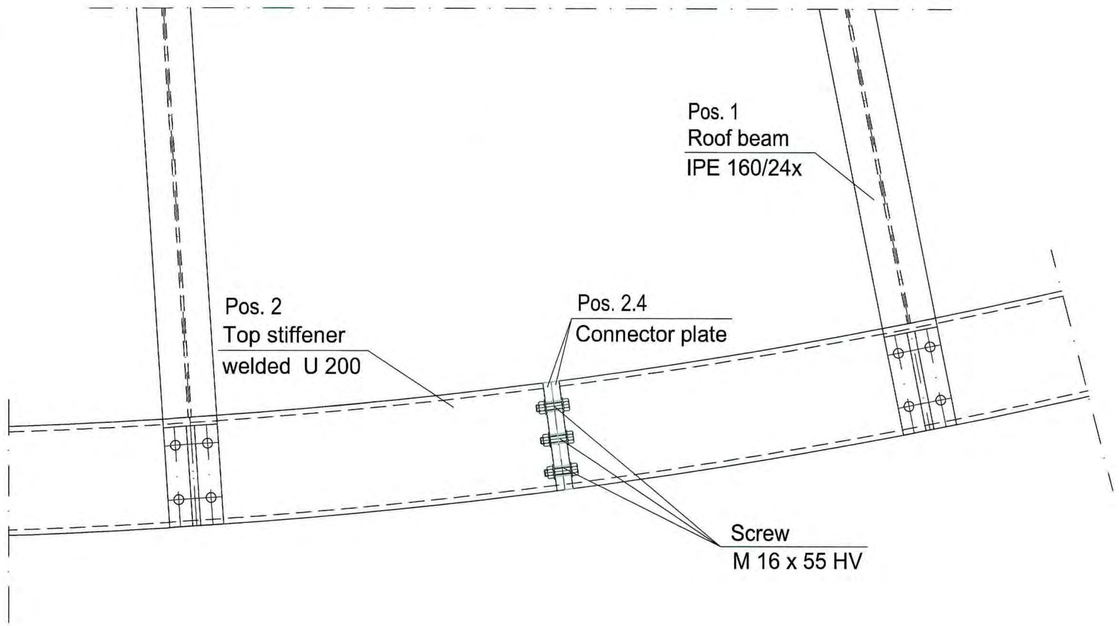

Schnitt A-A

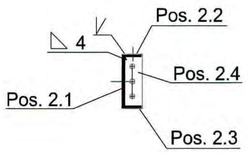

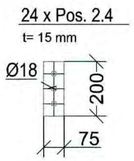

THE SCOPE OF THIS ENGINEERING STAMP IS FOR THE DESIGN OF THE FOLLOWING ITEMS:
TANK WALLS & RELATED CONNECTIONS,
ROOF FRAMING & RELATED CONNECTIONS, AND
FOUNDATION ANCHORAGE.

KEVIN M. McCORMICK
081.007574
LICENSED
STRUCTURAL
ENGINEER
STATE OF ILLINOIS
Signed 4-30-2021
End 11-30-2021

MILLER CONSULTING ENGINEERS

V seams 4mm
fillet welds 4mm
quality levels C
V seams are flat level
General tolerance for welded construction to
DIN ISO 13920: tolerances class C
welding processes to DIN ISO 4063: 135
Filler metal: G3Si1 EN ISO
Base metal: S235 JR

Diese Zeichnung ist unser Eigentum.
Unbefugte Benutzung ist verboten
und wird gerichtlich verfolgt.

This drawing remains our property.
Its use without due authority is forbidden
and will lead to legal action.

Bezeichnung / designation:
Connection Top Stiffener - Roof Beam
D=10.25m

Maßstab / Scala: 1:10 / Architectural D

Projekt / Project: Chicago

	Datum /Date	Name
worked on	03.30.2021	LR
examined		
standard		

Schumann Tanks USA
Schumann Tanks USA Corp.
777 Brickell Avenue, Suite 500
Miami, FL 33131 USA

Zust.	Änderung/Change	Datum	Name

Kunde / customer: Green Arrow

Drawing Index: 01.2

Zeichnungs-Nr. / design number: 2021/006-2.0 - 01

V.01

Cut

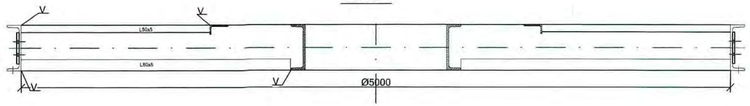

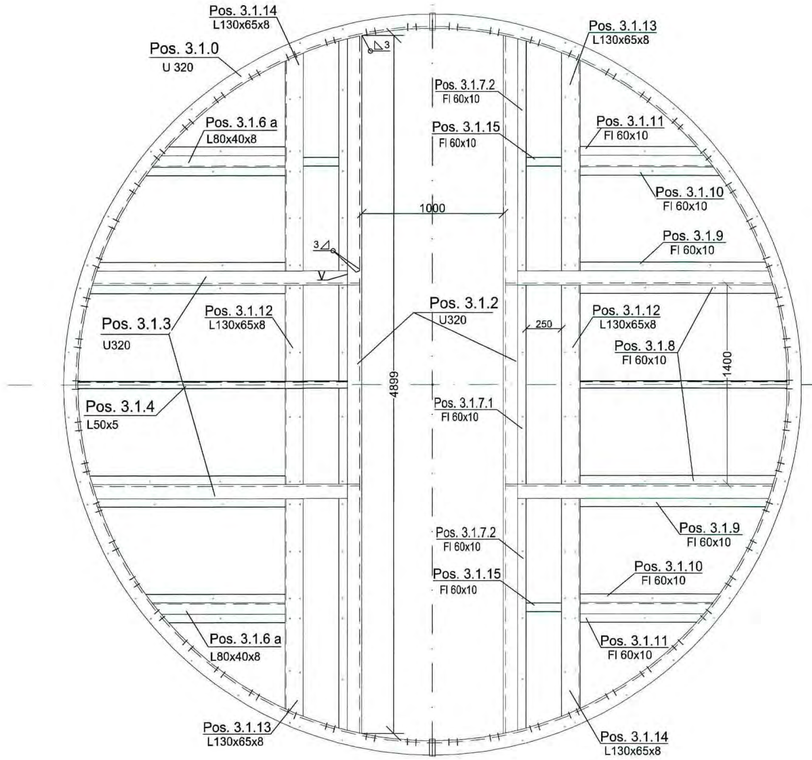

Top view

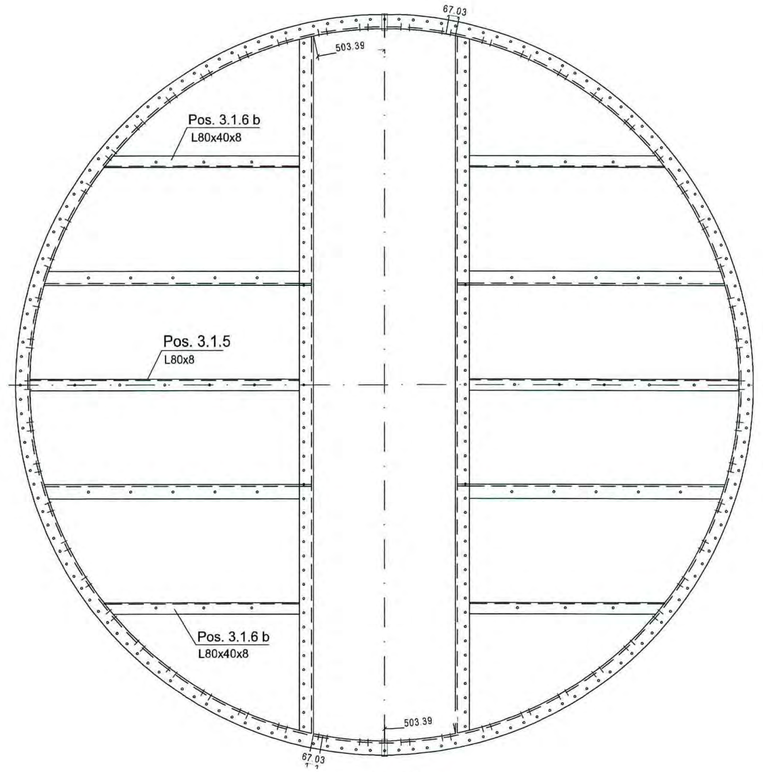

Bottom view

2 x U320 rolled

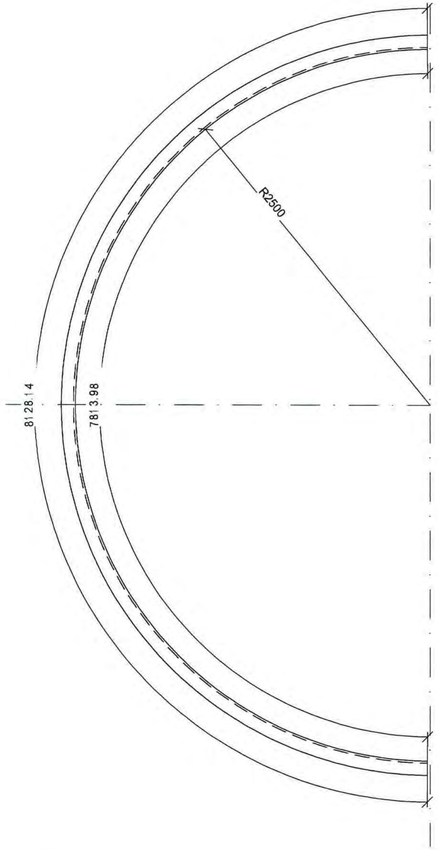

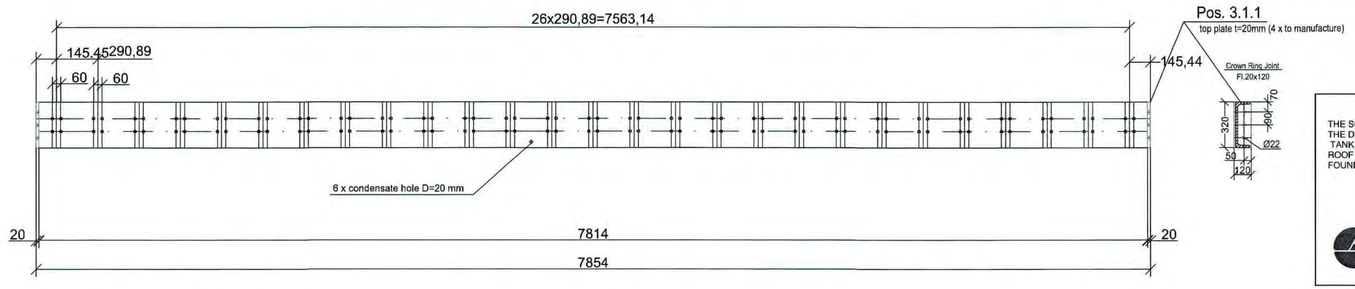

THE SCOPE OF THIS ENGINEERING STAMP IS FOR THE DESIGN OF THE FOLLOWING ITEMS:
TANK WALLS & RELATED CONNECTIONS,
ROOF FRAMING & RELATED CONNECTIONS, AND
FOUNDATION ANCHORAGE.

MILLER CONSULTING ENGINEERS

KEVIN M. McCORMICK
081.007526
LICENSED STRUCTURAL ENGINEER
STATE OF ILLINOIS
Signed 4-30-2021
Exp 11-30-2022

Stückliste:

Pos.	Stück	Bezeichnung	Länge einz.	Länge ges.	Gew. einz.	Gew. ges.	Werkst.	Güte:
			Länge / Fläche / m²					
3.1.0	2	U 320	8128 mm	16,26 m	59,5 kg/m	967,47 kg	S235JRG2	
3.1.1	4	Fl 120x20	320 mm	1,28 m	18,8 kg/m	24,06 kg	S235JRG2	
3.1.2	2	U 320	4897 mm	9,79 m	59,5 kg/m	582,51 kg	S235JRG2	
3.1.3	4	U 320	1884 mm	7,54 m	59,5 kg/m	448,63 kg	S235JRG2	
3.1.4	2	L 50x50x5	1458 mm	2,92 m	3,77 kg/m	11,01 kg	S235JRG2	
3.1.5	2	L 80x40x8	1898 mm	3,80 m	7,07 kg/m	26,87 kg	S235JRG2	
3.1.6 a	4	L 80x40x8	935 mm	3,74 m	7,07 kg/m	26,44 kg	S235JRG2	
3.1.6 b	4	L 80x40x8	1375 mm	5,50 m	7,07 kg/m	38,89 kg	S235JRG2	
3.1.7	2	Fl 60x10	4616 mm	9,23 m	4,71 kg/m	43,47 kg	S235JRG2	
3.1.8	4	Fl 60x10	1372 mm	5,49 m	4,71 kg/m	25,86 kg	S235JRG2	
3.1.9	4	Fl 60x10	1323 mm	5,29 m	4,71 kg/m	24,92 kg	S235JRG2	
3.1.10	4	Fl 60x10	980 mm	3,92 m	4,71 kg/m	18,46 kg	S235JRG2	
3.1.11	4	Fl 60x10	870 mm	3,48 m	4,71 kg/m	16,39 kg	S235JRG2	
3.1.12	2	L 130x65x8	1418 mm	2,84 m	11,90 kg/m	33,80 kg	S235JRG2	
3.1.13	2	L 130x65x8	1516 mm	3,03 m	11,90 kg/m	36,06 kg	S235JRG2	
3.1.14	2	L 130x65x8	1516 mm	3,03 m	11,90 kg/m	36,06 kg	S235JRG2	
3.1.15	4	Fl 60x10	248 mm	0,99 m	11,90 kg/m	11,80 kg	S235JRG2	
						2372,70 kg		

2 x Pos. 3.1.2
U 320

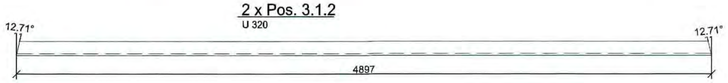

je 2x Pos.
L130x65x8

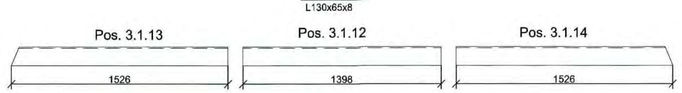

2 x Pos. 3.1.7
Fl 60x10

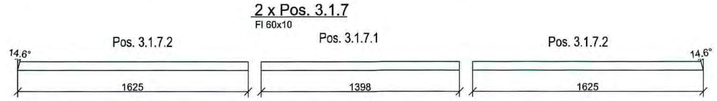

4 x Pos. 3.1.3
U 320
(2 x drawn
2 x mirror-inverted)

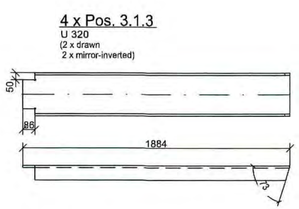

2x Pos. 3.1.4
L50x50x5

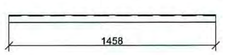

2x Pos. 3.1.5
L80x40x8

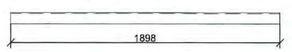

4 x Pos. 3.1.8
Fl 60x10
(2 x drawn
2 x mirror-inverted)

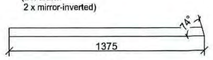

4 x Pos. 3.1.9
Fl 60x10
(2 x drawn
2 x mirror-inverted)

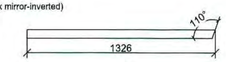

4 x Pos. 3.1.6 a
L 80x40x8

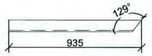

4 x Pos. 3.1.6 b
L 80x40x8
(2 x drawn
2 x mirror-inverted)

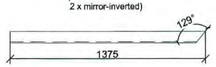

4 x Pos. 3.1.10
Fl 60x10
(2 x drawn
2 x mirror-inverted)

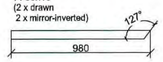

4 x Pos. 3.1.11
Fl 60x10
(2 x drawn
2 x mirror-inverted)

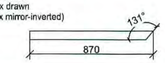

4 x Pos. 3.1.15
Fl 60x10

All parts shortened by 2 mm in length !

Diese Zeichnung ist unser Eigentum.
Unbefugte Benutzung ist verboten
und wird gerichtlich verfolgt.

This drawing remains our property.
Its use without due authority is forbidden
and will lead to legal action.

Bezeichnung / description:
Crown Ring D=5000
D=23,06 m

Maßstab / Scala: 1:20 / Architectural C

Project / Project: Chicago

Zust	Änderung/Change	Datum	Name
		Datum /Data	Name
	worked on	04.01.2021	LR
	examined		
	standard		

Schumann Tanks USA
Schumann Tanks USA Corp.
777 Brickell Avenue, Suite 500
Miami, FL 33131 USA

Kunde / customer: Green Arrow

Drawing Index: 02.1

Zeichnungs-Nr. / design number: 2021/006-1.0 - 02

V.01

Cut

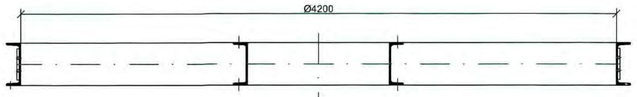

Top View

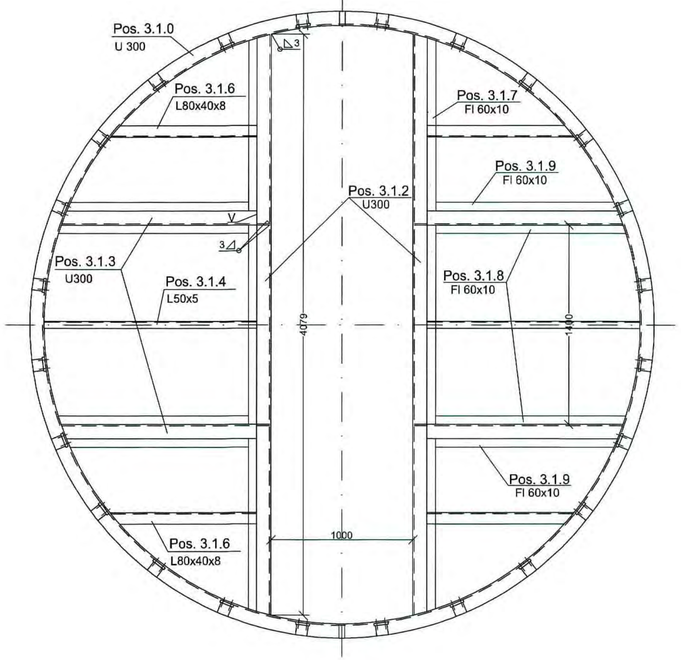

Bottom View

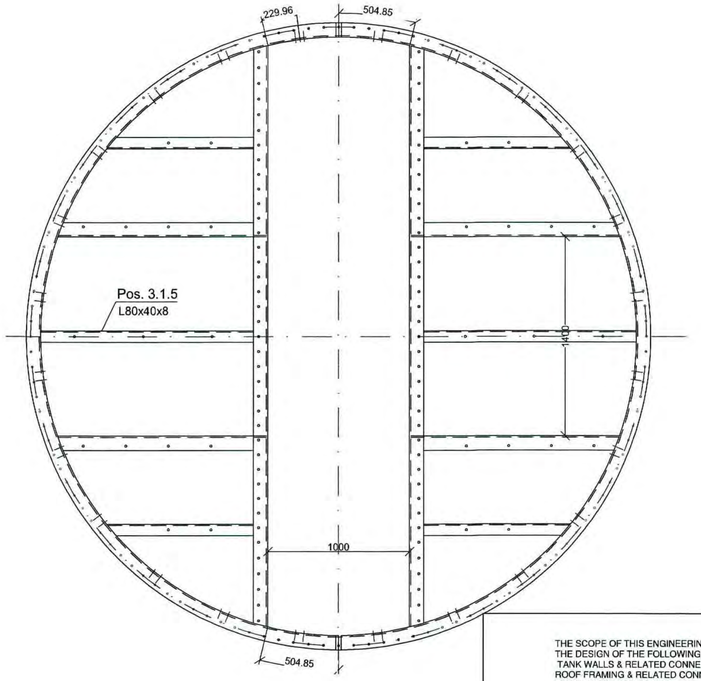

2 x U300 rolled

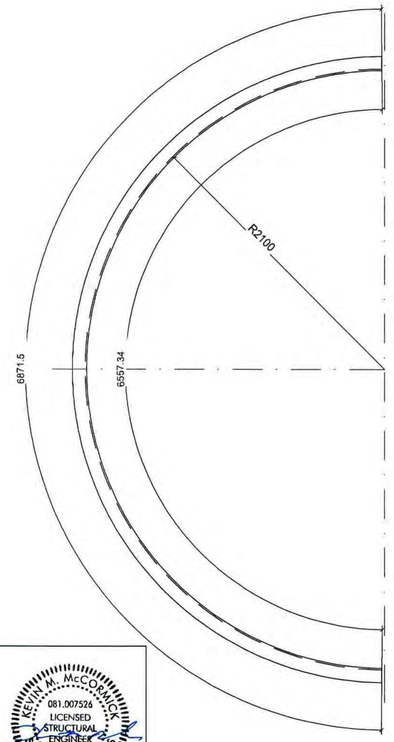

2x Pos. 3.1.0 / U300

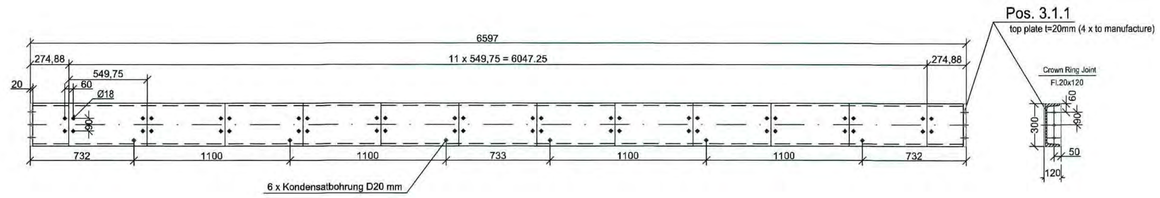

THE SCOPE OF THIS ENGINEERING STAMP IS FOR THE DESIGN OF THE FOLLOWING ITEMS:
TANK WALLS & RELATED CONNECTIONS,
ROOF FRAMING & RELATED CONNECTIONS, AND
FOUNDATION ANCHORAGE.

MILLER CONSULTING ENGINEERS

KEVIN M. McCORMICK
081.007526
LICENSED STRUCTURAL ENGINEER
STATE OF ILLINOIS
Signed 4-30-2021
Exp. 11-30-2022

Stückliste:

			Länge / Fläche / m²				Güte:	
Pos.	Stück	Bezeichnung	Länge einz.	Länge ges.	Gew. einz.	Gew. ges.	Werkst.	
3.1.0	2	U 300	6557 mm	13,12 m	46,2 kg/m	606,00 kg	S235JRG2	
3.1.1	4	Fl 120x20	300 mm	1,20 m	18,8 kg/m	22,56 kg	S235JRG2	
3.1.2	2	U 300	4077 mm	8,15 m	46,2 kg/m	376,53 kg	S235JRG2	
3.1.3	4	U 300	1468 mm	5,87m	46,2 kg/m	271,19 kg	S235JRG2	
3.1.4	2	L 50x5	1498 mm	3,00 m	3,77 kg/m	11,31 kg	S235JRG2	
3.1.5	2	L 80x8	1498 mm	3,00 m	9,63 kg/m	28,98 kg	S235JRG2	
3.1.6	8	L 80x8	1035 mm	8,28 m	9,63 kg/m	80,00 kg	S235JRG2	
3.1.7	2	Fl 60x10	3818 mm	7,64 m	4,71 kg/m	35,98 kg	S235JRG2	
3.1.8	4	Fl 60x10	1338 mm	5,35 m	4,71 kg/m	25,20 kg	S235JRG2	
3.1.9	4	Fl 60x10	1280 mm	5,12 m	4,71 kg/m	24,12 kg	S235JRG2	
						1481,87 kg		

2 x Pos. 3.1.2
U 300

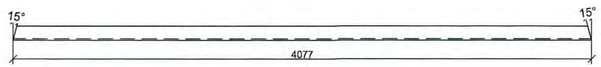

4 x Pos. 3.1.3
U 300
(2 x drawn
2 x mirror-inverted)

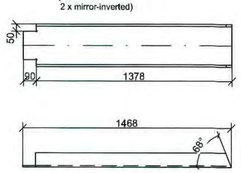

2x Pos. 3.1.4
L 50x50x5

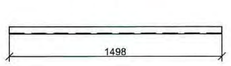

2x Pos. 3.1.5
L 80x40x8

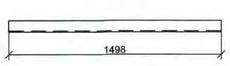

8x Pos. 3.1.6
L 80x40x8
(4 x drawn
4 x mirror-inverted)

2 x Pos. 3.1.7
Fl 60x10

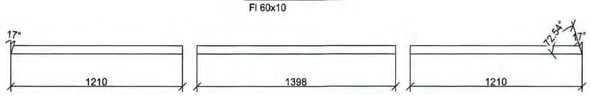

4 x Pos. 3.1.8
Fl 60x10
(2 x drawn
2 x mirror-inverted)

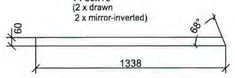

4 x Pos. 3.1.9
Fl 60x10
(2 x drawn
2 x mirror-inverted)

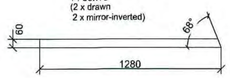

All parts shortened by 2 mm in length !

Diese Zeichnung ist unser Eigentum.
Unbefugte Benutzung ist verboten
und wird gerichtlich verfolgt.

This drawing remains our property.
its use without due authority is forbidden
and will lead to legal action.

Bezeichnung / designation:
Crown Ring D=4200
Tank D=10,25 m

Maßstab / Scala: 1:20 / Architectural C

Project / Project: Chicago

	Datum /Date	Name
worked on	04.01.2021	LR
examined		
standard		

Kunde / customer: Green Arrow

Drawing Index: 02.2

Schumann Tanks USA
Schumann Tanks USA Corp.
777 Brickell Avenue, Suite 500
Miami, FL 33131 USA

Zeichnungs-Nr. / design number: 2021/006-2.0 - 02

V.01

Zust. | Änderung/Change | Datum | Name

Pos. 2.1
54 Pieces Roof Beams IPE 200

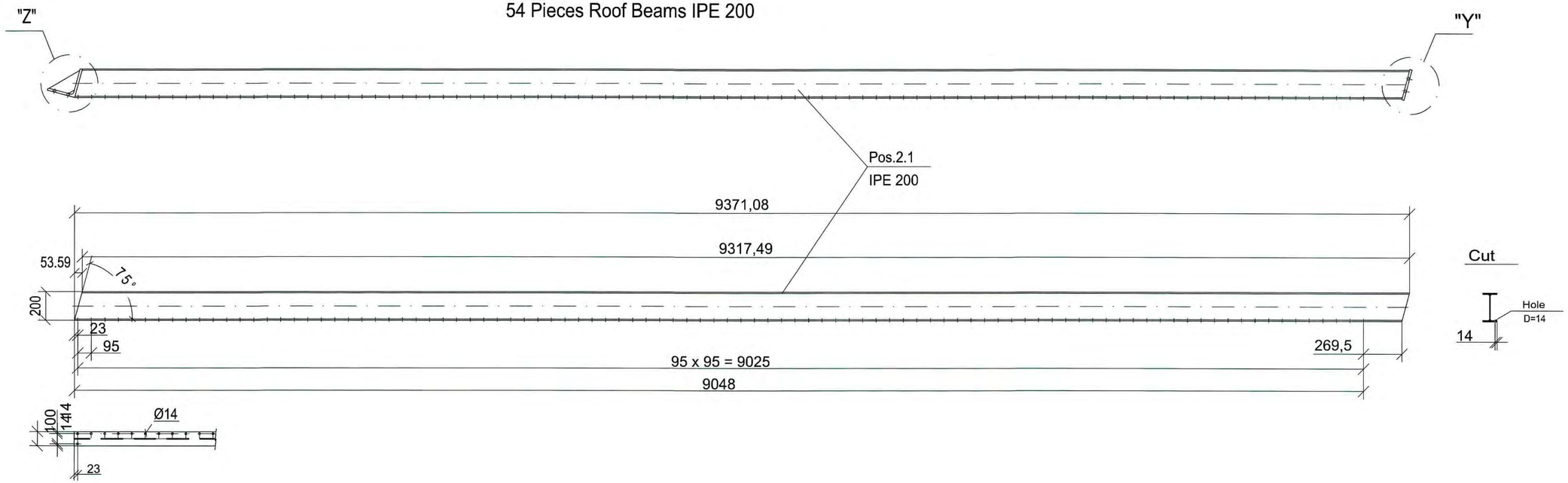

Detail Z
M 3:1

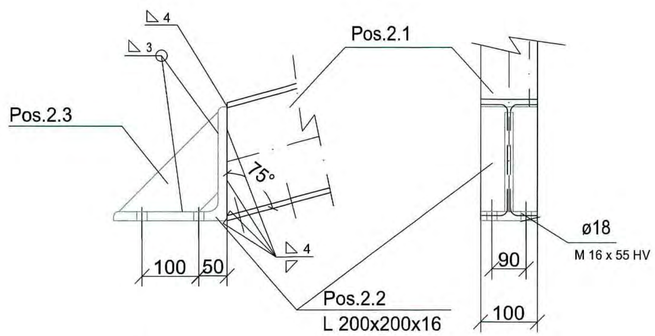

Detail Y
M 3:1

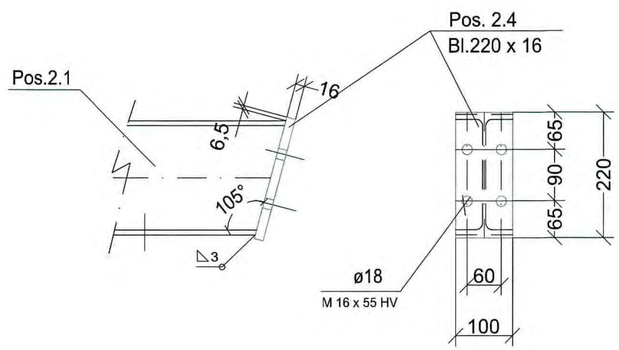

Pos.2.3
t=6
M 3:1

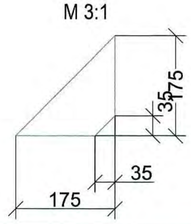

THE SCOPE OF THIS ENGINEERING STAMP IS FOR THE DESIGN OF THE FOLLOWING ITEMS:
TANK WALLS & RELATED CONNECTIONS,
ROOF FRAMING & RELATED CONNECTIONS, AND
FOUNDATION ANCHORAGE.

KEVIN M. McCORMICK
081.007526
LICENSED
STRUCTURAL
ENGINEER
STATE OF ILLINOIS
Signed 4-30-2021
Exp 11-30-2022

MILLER CONSULTING ENGINEERS

Part List:

Pos.	Pos	Description	Length single	Total Length	Weight single	Total Weight	Class	Note:
2.1	54	IPE 200	9372 mm	506,09 m	209,93 kg	11339,37 kg	St 37	
2.2	54	L 200x200x16	100 mm	5,40 m	4,85 kg	261,90 kg	St 37	
2.3	54	Bl. 180x6	180 mm	9,72 m	1,53 kg	82,43 kg	St 37	
2.4	54	Bl. 220x16	100 mm	5,40 m	2,59 kg	139,86 kg	St 37	
					218,90 kg	11820,56 kg		
	216	Bolt M16x45					10.9 hdg	HV-Connection
	216	Bolt M16x45					10.9 hdg	HV-Connection
	432	Nut M16					10.9 hdg	
	864	Washer A17					10.9 hdg	

Diese Zeichnung ist unser Eigentum.
Unbefugte Benutzung ist verboten
und wird gerichtlich verfolgt.

This drawing remains our property.
Its use without due authority is forbidden
and will lead to legal action.

Bezeichnung / designation
Roof Beams IPE 200
D=23,06 m / 15°

Maßstab / Scale : 1:15 / Architectural D

Projekt / Project:
Chicago

	Datum /Date	Name
worked on	04.01.2021	LR
examined		
standard		

Kunde / customer:
Green Arrow

Drawing Index: 03.1

Schumann Tanks USA
Schumann Tanks USA Corp.
777 Brickell Avenue, Suite 500
Miami, FL 33131 USA

Zeichnungs-Nr. / design number:
2021/006-1.0 - 03

V.02

Zust. | Änderung/Change | Datum | Name

24 Pieces Roof Beams Pos. 2

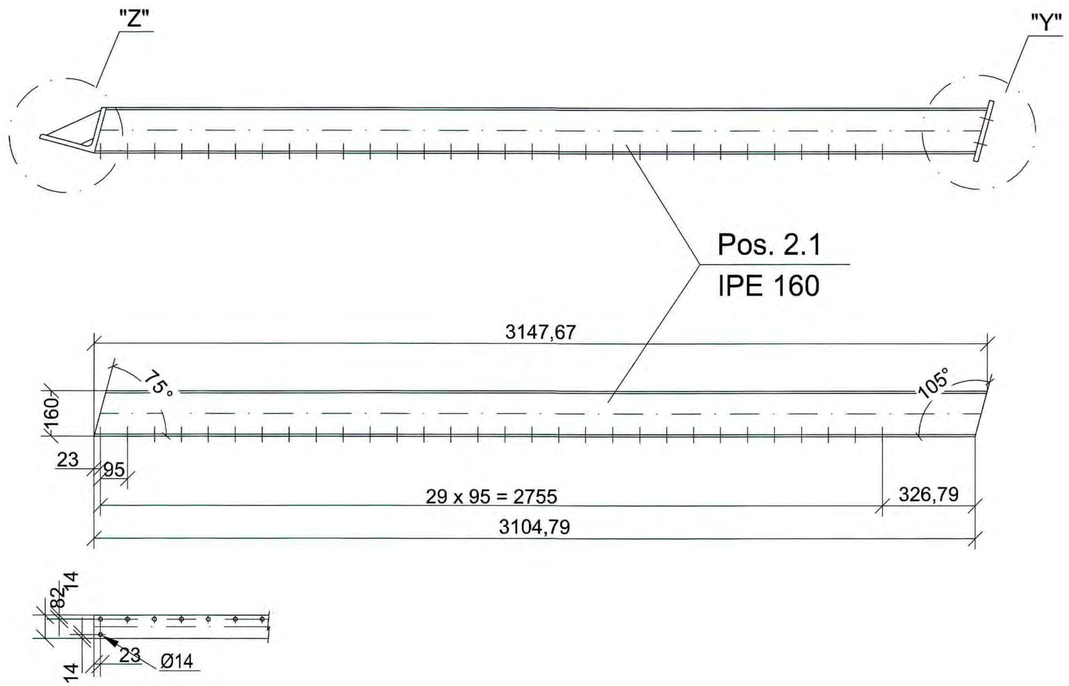

Cut

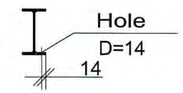

Detail Z
M 3:1

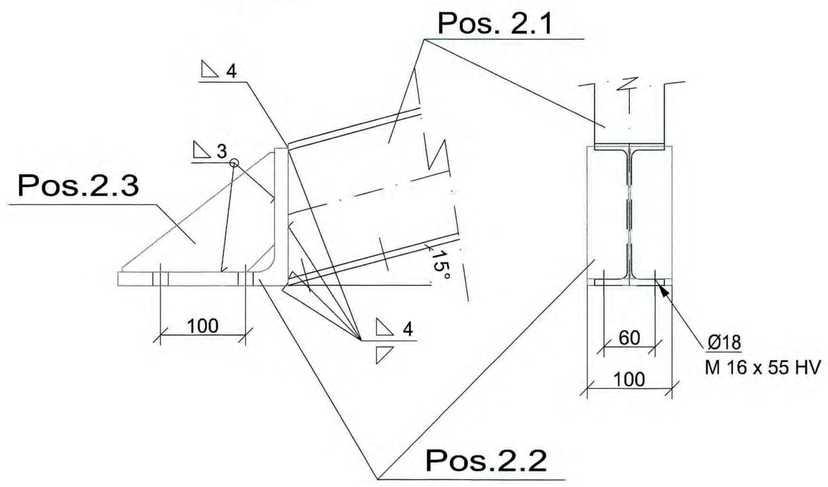

Detail Y
M 3:1

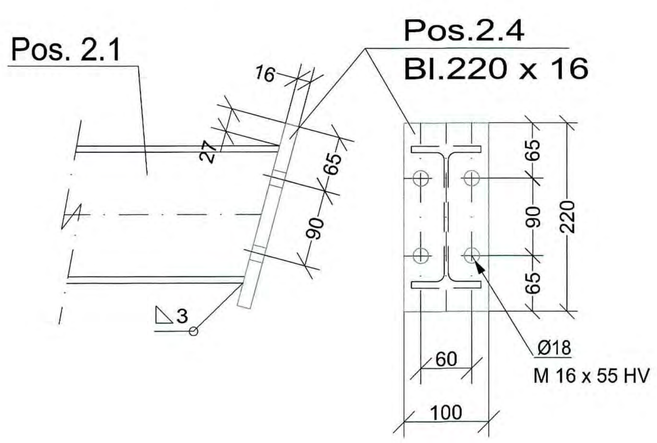

THE SCOPE OF THIS ENGINEERING STAMP IS FOR THE DESIGN OF THE FOLLOWING ITEMS:
TANK WALLS & RELATED CONNECTIONS,
ROOF FRAMING & RELATED CONNECTIONS, AND
FOUNDATION ANCHORAGE.

KEVIN M. McCORMICK
081.007526
LICENSED STRUCTURAL ENGINEER
STATE OF ILLINOIS
Signed 4-30-2021
Exp. 11-30-2021

MILLER CONSULTING ENGINEERS

Part List:

Pos.	Pcs.	Description	Length single	Total length	Weight single	Total weight	class:	Note:
2.1	24	IPE 160	3148 mm	75,55 m	15,80 kg	1193,69 kg	St 37	
2.2	24	L 200x200x16	100 mm	2,40 m	48,50 kg	116,4 kg	St 37	
2.3	24	Bl. 180 x 8	180 mm	4,32 m	3,77 kg	16,29 kg	St 37	
2.4	24	Bl. 220 x 16	100 mm	2,40 m	25,90 kg	62,16 kg	St 37	
						1388,54 kg		
	96	Bolt M16x45					10.9 hdg	HV-Connection
	96	Bolt M16x45					10.9 hdg	HV-Connection
	192	Nut M16					10.9 hdg	
	384	Washer A17					10.9 hdg	

Diese Zeichnung ist unser Eigentum.
Unbefugte Benutzung ist verboten
und wird gerichtlich verfolgt

This drawing remains our property.
Its use without due authority is forbidden
and will lead to legal action.

Bezeichnung / designation
Pos. 2 / 24x Roof Beams IPE 160
Roof D=10,25 m / 15°

Maßstab / Scale: 1:15 / Architectural D

Projekt / Project: Chicago

Kunde / customer: Green Arrow

Drawing Index: 03.2

	Datum /Date	Name
worked on	04.01.2021	LR
examined		
standard		

Schumann Tanks USA
Schumann Tanks USA Corp.
777 Brickell Avenue, Suite 500
Miami, FL 33131 USA

Zust. | Änderung/Change | Datum | Name

Zeichnungs-Nr. / design number: 2021/006-2.0 - 03

V.02

Overview

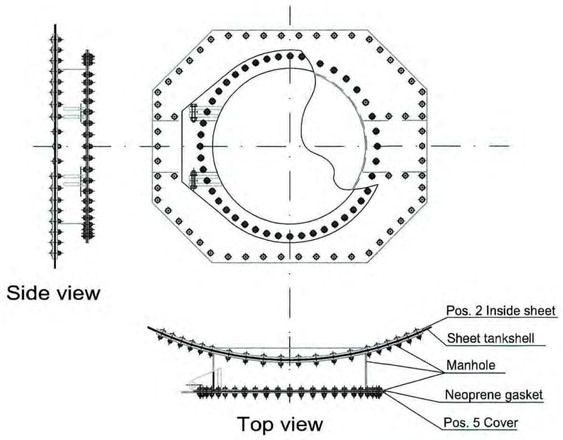

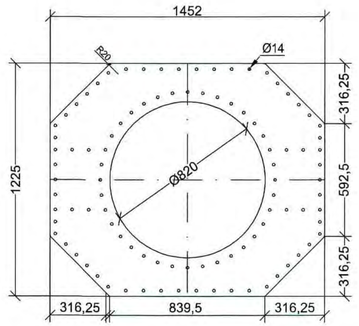

Pos. 1 Outside sheet

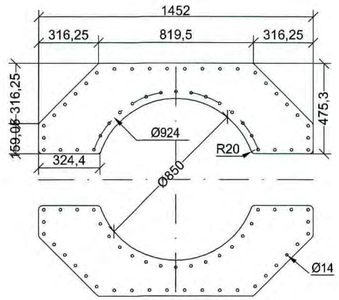

Pos. 2 Inside sheet

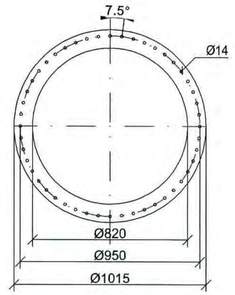

Pos. 4 Flange
Pos.10 Gasket

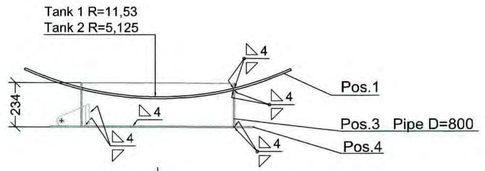

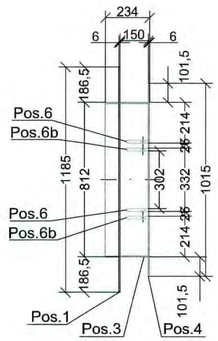

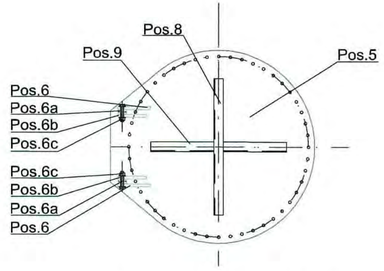

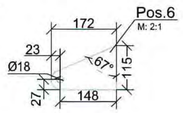

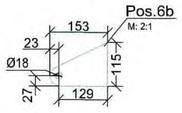

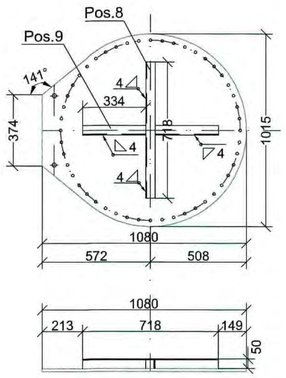

Pos. 5 Cover

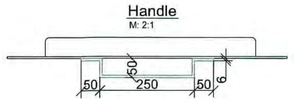

THE SCOPE OF THIS ENGINEERING STAMP IS FOR THE DESIGN OF THE FOLLOWING ITEMS:
TANK WALLS & RELATED CONNECTIONS,
ROOF FRAMING & RELATED CONNECTIONS, AND
FOUNDATION ANCHORAGE.

KEVIN A. McCORMICK 081.007526 LICENSED STRUCTURAL ENGINEER STATE OF ILLINOIS

Signed 4-30-2021
Exp 11-30-2022

MILLER CONSULTING ENGINEERS

Pos.:	Description:	Dimensions:	Piece:	Goodness:	Remark:
Pos. 1	Outside sheet	1452 x 1185	1		T1: S355, T2: AISI304
Pos. 2	Inside sheet	1452 x 455	2		T1: S355, T2: AISI304
Pos. 3	Pipe	DN 800	1		
Pos. 4	Flange	1015 x 97	1		
Pos. 5	Cover	1080 x 1015	1		
Pos. 6	Hinge	172 x 115 x 15	2		
Pos. 6a	Eye bolt	M 16 x 110	2		
Pos. 6b	Hinge	153 x 115 x 15	2		
Pos. 6c	Bolt	HV M16 x 85	2		
Pos. 8	Angle 50 x 5	718	1		
Pos. 9	Angle 50 x 5	334	2		
Pos. 10	Gasket	1015 x 97 x 5	1	Neoprene	
Screws	Cover	M12 x 40	48		Set
Screws	Tank	M12 x 35	86		Set / Silo bolt
Screws	Tank	M12 x 30	12		Set / Silo bolt

Diese Zeichnung ist unser Eigentum.
Unbefugte Benutzung ist verboten
und wird gerichtlich verfolgt.

This drawing remains our property.
Its use without due authority is forbidden
and will lead to legal action.

Bezeichnung / designation:
Man Way DN800 / 32"

Maßstab / Scale: 1:15 / Architectural D

Projekt / Project:
Chicago

	Datum /Date	Name
worked on	04.01.2021	LR
examined		
standard		

Kunde / customer:
Green Arrow

Drawing Index: 04

Schumann Tanks USA
Schumann Tanks USA Corp.
777 Brickell Avenue, Suite 500
Miami, FL 33131 USA

Zeichnungs-Nr. / design number:
2021/006-1.0/2.0 - 04

V.02

Zust. | Änderung/Change | Datum | Name

Detail fixing wind stiffener

M: 3:1

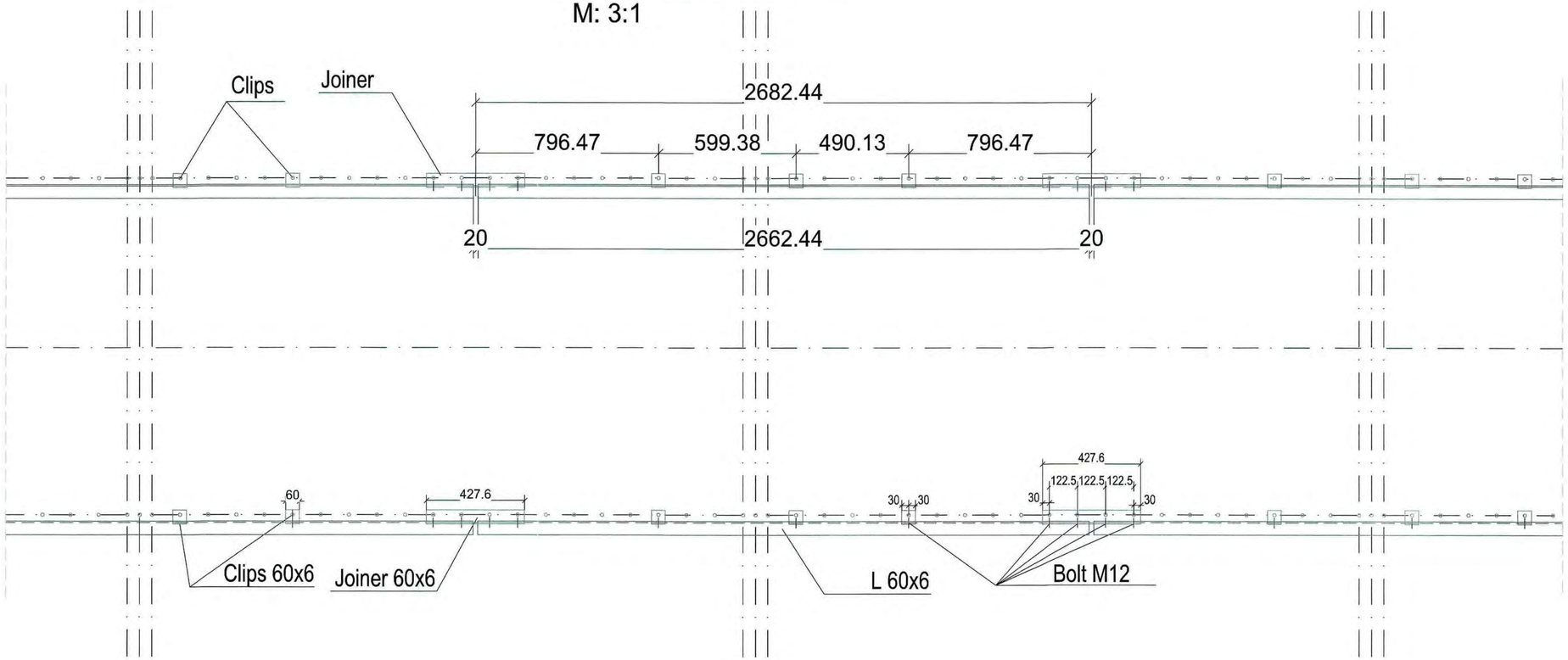

Detail "C"

M.: 5:1

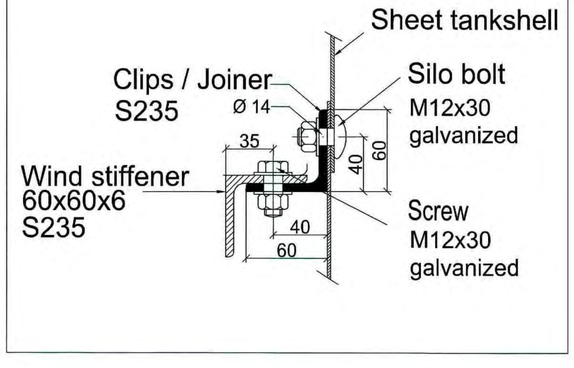

THE SCOPE OF THIS ENGINEERING STAMP IS FOR THE DESIGN OF THE FOLLOWING ITEMS:
TANK WALLS & RELATED CONNECTIONS,
ROOF FRAMING & RELATED CONNECTIONS, AND
FOUNDATION ANCHORAGE.

KEVIN M. McCORMICK
081.007526
LICENSED
STRUCTURAL
ENGINEER
STATE OF ILLINOIS
Signed 4-30-2021
Exp. 11-30-2022

MILLER
CONSULTING
ENGINEERS

Diese Zeichnung ist unser Eigentum.
Unbefugte Benutzung ist verboten
und wird gerichtlich verfolgt.

This drawing remains our property.
Its use without due authority is forbidden
and will lead to legal action.

Bezeichnung / designation:
Detail Wind stiffener 60x60x6

Maßstab / Scale: 1:10 / Architectural D

Projekt / Project: Chicago

	Datum /Date	Name
worked on	04.01.2021	LR
examined		
standard		

Kunde / customer: Green Arrow

Drawing Index: 05

Schumann Tanks USA
Schumann Tanks USA Corp.
777 Brickell Avenue, Suite 500
Miami, FL 33131 USA

Zeichnungs-Nr. / design number: 2021/006-1.0/2.0 - 05

V.01

Zust	Änderung/Change	Datum	Name

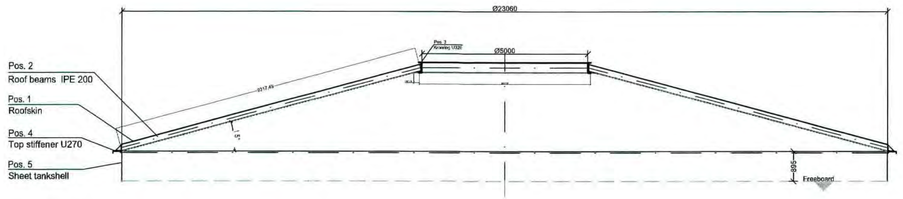

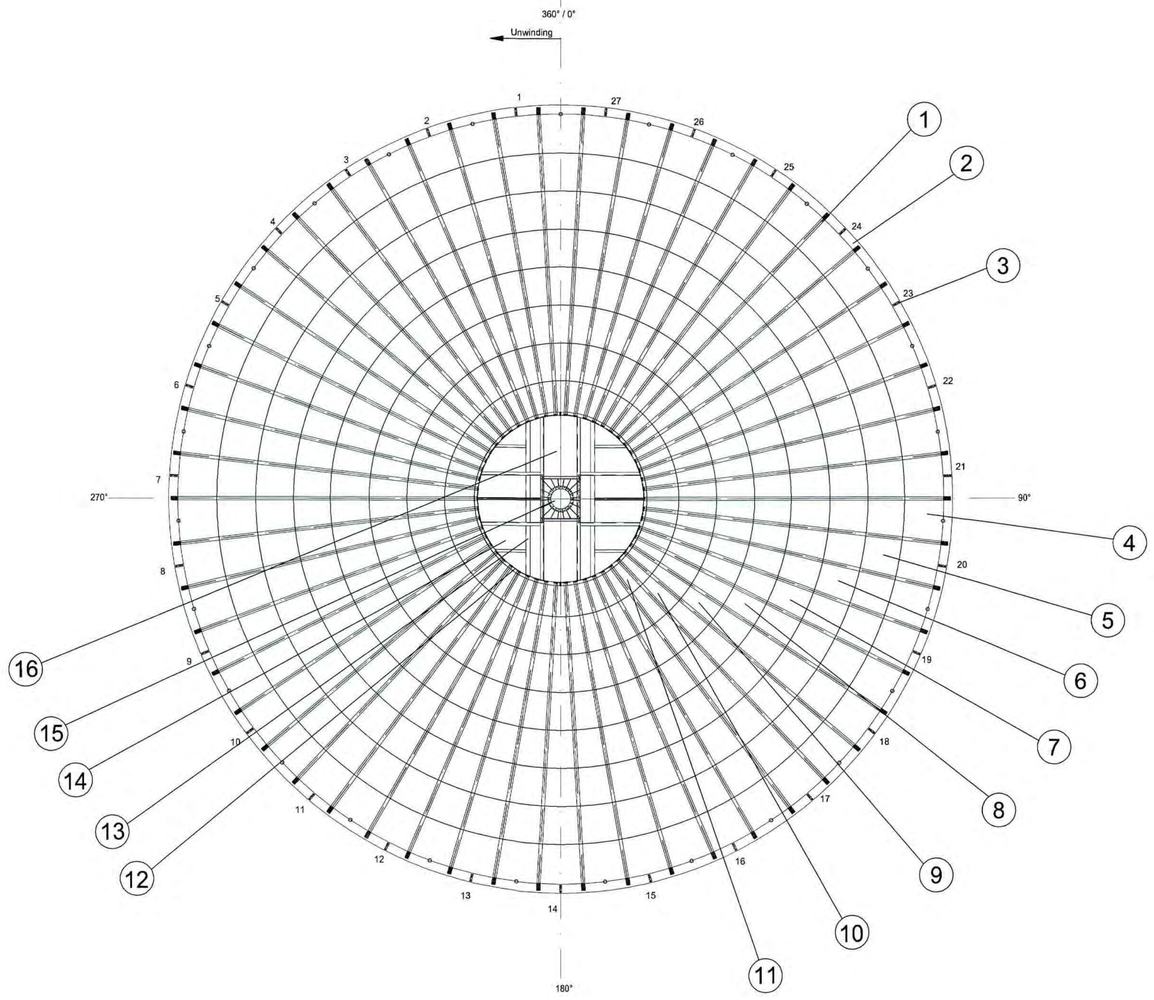

Note: Guardrail and walkway not shown

THE SCOPE OF THIS ENGINEERING STAMP IS FOR THE DESIGN OF THE FOLLOWING ITEMS:
TANK WALLS & RELATED CONNECTIONS,
ROOF FRAMING & RELATED CONNECTIONS, AND
FOUNDATION ANCHORAGE.

KEVIN M. McCORMICK
081.007526
LICENSED
STRUCTURAL
ENGINEER
STATE OF ILLINOIS
Signed 4-30-2021
Exp 11-30-2022

MILLER CONSULTING ENGINEERS

Parts list:

Pos.	Piece	Discription	Material	Remark
1	54	Roof beam	316 TI	IPE 200
2	27	Top stiffener	S235	U 200
3	54	Connector plate	S235	Laserpart
4	54	Stainless roof sheets 1,5 mm	316 TI	Sheet 1
5	54	Stainless roof sheets 1,5 mm	316 TI	Sheet 2
6	54	Stainless roof sheets 1,5 mm	316 TI	Sheet 3
7	54	Stainless roof sheets 1,5 mm	316 TI	Sheet 4
8	54	Stainless roof sheets 1,5 mm	316 TI	Sheet 5
9	54	Stainless roof sheets 1,5 mm	316 TI	Sheet 6
10	54	Stainless roof sheets 1,5 mm	316 TI	Sheet 7
11	54	Stainless roof sheets 1,5 mm	316 TI	Sheet 8
12	1	Crownring	S235JRG2	U 320
13	8	Crownbeam	S235JRG2	U 320
14	10	Sheet under crownring t=1,5 mm	316 TI	
15	1	Mixer flange	S235	DN 600
16	2	Cover of center	316 TI	

Diese Zeichnung ist unser Eigentum.
Unbefugte Benutzung ist verboten
und wird gerichtlich verfolgt.

This drawing remains our property.
Its use without due authority is forbidden
and will lead to legal action.

Bezeichnung / designation:
Roof D=23,06 m / IPE 200 /15°

Maßstab / Scala: 1:50 / Architectural D

Projekt / Project: Chicago

	Datum /Date	Name
worked on	04.01.2021	LR
examined		
standard		

Kunde / customer: Green Arrow

Drawing Index: 06.1

Schumann Tanks USA
Schumann Tanks USA Corp.
777 Britell Avenue, Suite 900
Miami, FL 33131 USA

Zeichnungs-Nr. / design number: 2021/006-1.0 - 06

V.02

Zust.	Änderung/Change	Datum	Name

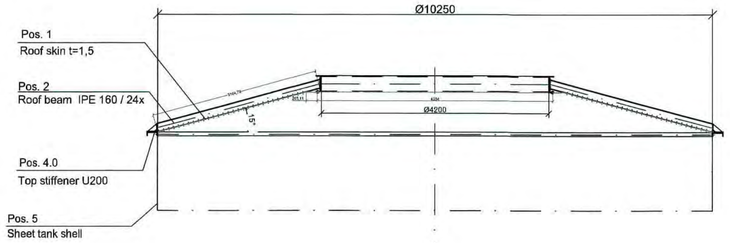

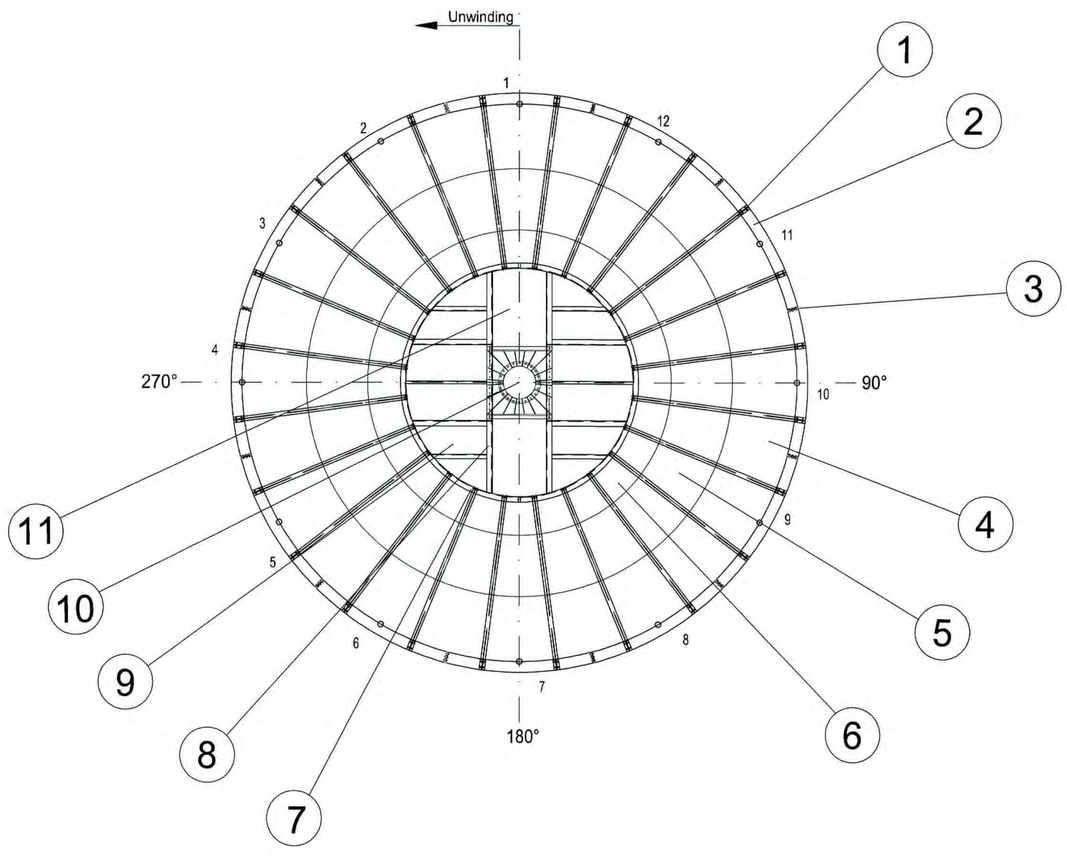

Note: Guardrail and walkway not shown

THE SCOPE OF THIS ENGINEERING STAMP IS FOR THE DESIGN OF THE FOLLOWING ITEMS:
TANK WALLS & RELATED CONNECTIONS,
ROOF FRAMING & RELATED CONNECTIONS, AND
FOUNDATION ANCHORAGE.

KEVIN M. McCORMICK
081.007526
LICENSED STRUCTURAL ENGINEER
STATE OF ILLINOIS
SIGNED 4-30-2021
EXP. 11-30-2022

MILLER CONSULTING ENGINEERS

Parts list:

Pos.	Piece	Discription	Material	Remark
1	24	Roof beam	316 TI	IPE 200
2	12	Top stiffener	S235	U 200
3	24	Connector plate	S235	Laserpart
4	24	Stainless roof sheets 1,5 mm	316 TI	Sheet 1
5	24	Stainless roof sheets 1,5 mm	316 TI	Sheet 2
6	24	Stainless roof sheets 1,5 mm	316 TI	Sheet 3
7	1	Crownring	S235JRG2	U 300
8	8	Crownbeam	S235JRG2	U 300
9	10	Sheet under crownring t=1,5 mm	316 TI	
10	1	Mixer flange	S235	DN 600
11	2	Cover of center	316 TI	

Diese Zeichnung ist unser Eigentum.
Unbefugte Benutzung ist verboten
und wird gerichtlich verfolgt.

This drawing remains our property.
Its use without due authority is forbidden
and will lead to legal action.

Bezeichnung / designation:
Roof D=10,25 m / IPE 160 /15°

Maßstab / Scale: 1:50 / Architectural D

Projekt / Project: Chicago

	Datum /Date	Name
worked on	04.01.2021	LR
examined		
standard		

Kunde / customer: Green Arrow

Drawing Index: 06.2

Schumann Tanks USA
Schumann Tanks USA Corp.
777 Brickell Avenue, Suite 500
Miami, FL 33131 USA

Zeichnungs-Nr. / design number: 2021/006-2.0 - 06

V.01

Zust. | Anderung/Change | Datum | Name

foundation angle 90x90x9
material: S235
(D= 23,06 m)
M 3:1

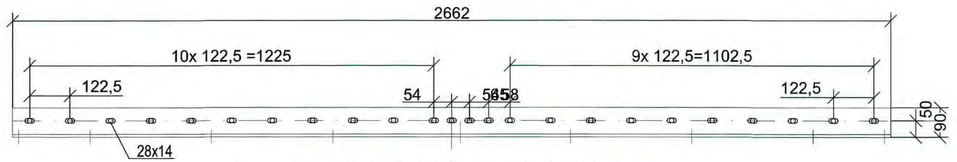

connection to tank shell 24 pieces M12x30 DIN 933

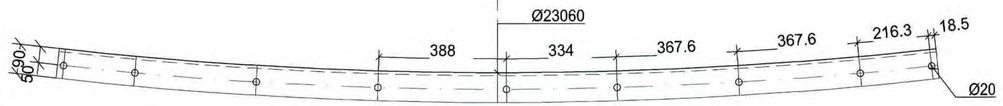

anchoring foundation 9 pieces UPAT UPM44 M16 (HEF = 320) R-70

Joiner
90x90x9

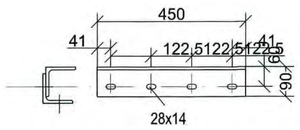

Detail "A"
M 10:1

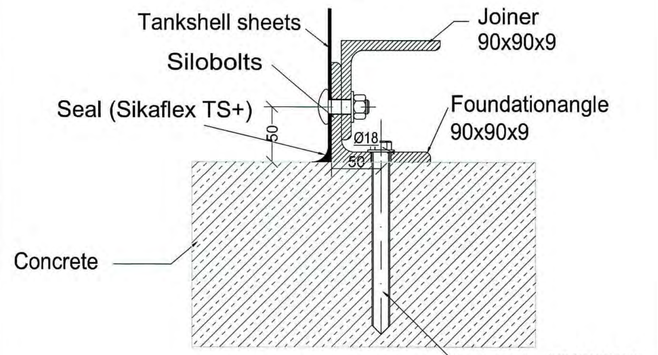

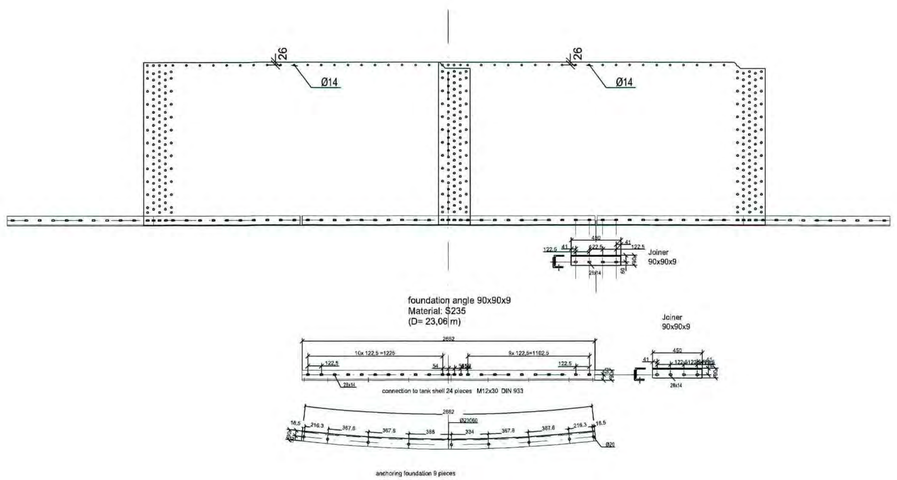

THE SCOPE OF THIS ENGINEERING STAMP IS FOR THE DESIGN OF THE FOLLOWING ITEMS: TANK WALLS & RELATED CONNECTIONS, ROOF FRAMING & RELATED CONNECTIONS, AND FOUNDATION ANCHORAGE.

KEVIN M. McCORMICK 081.007526 LICENSED STRUCTURAL ENGINEER STATE OF ILLINOIS
Signed 4-30-2021
Exp 11-30-2021

MILLER CONSULTING ENGINEERS

Diese Zeichnung ist unser Eigentum.
Unbefugte Benutzung ist verboten
und wird gerichtlich verfolgt.

This drawing remains our property.
Its use without due authority is forbidden
and will lead to legal action.

Bezeichnung / designation

Foundation angle 90x90x9
D= 23,06 m

Maßstab / Scala : 1:50 / Architectural D

Projekt / Project:
Chicago

Zust	Änderung/Change	Datum	Name		Datum /Date	Name
				worked on	04.01.2021	LR
				examined		
				standard		

Schumann Tanks USA
Schumann Tanks USA Corp.
777 Brickell Avenue, Suite 500
Miami, FL 33131 USA

Kunde / customer:
Green Arrow

Drawing Index:
07.1

Zeichnungs-Nr. / design number:
2021/006-1.0 - 07

V.01

foundation angle 90x90x9
material: S235
(D= 10,25 m)
M 3:1

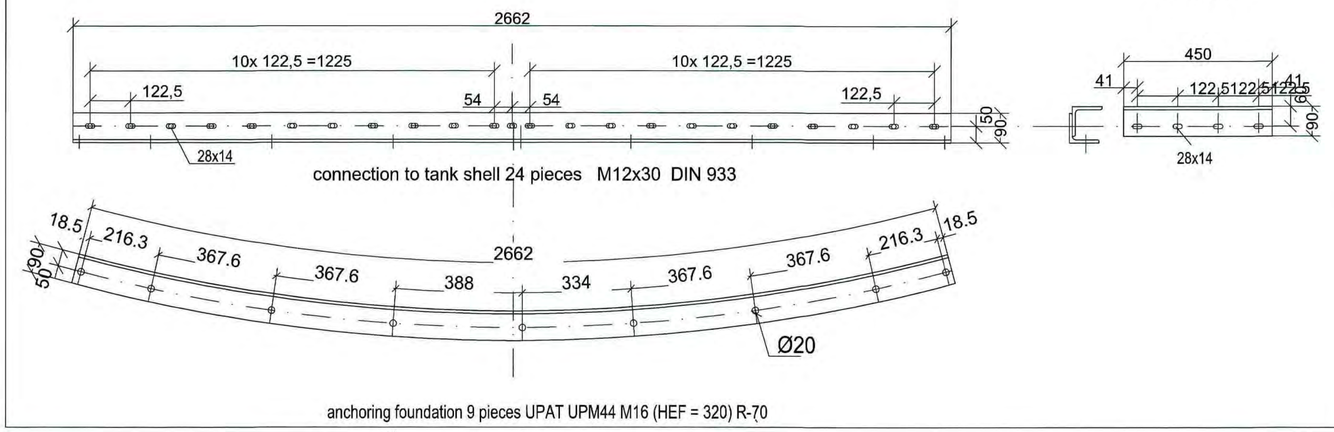

Joiner
90x90x9

Detail "A"
M. 10:1

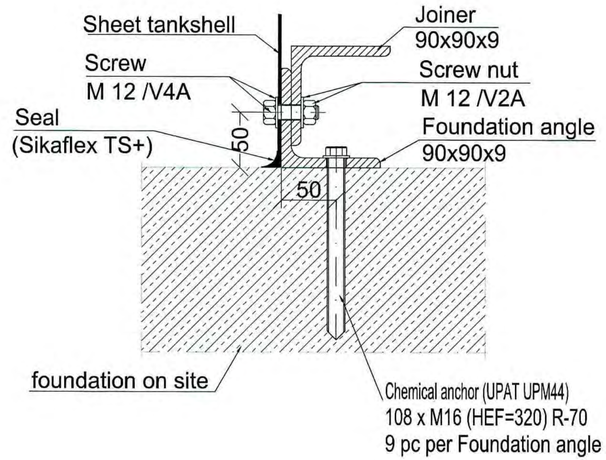

Foundation angle 90x90x9
D=10,25 m
M: 1:1

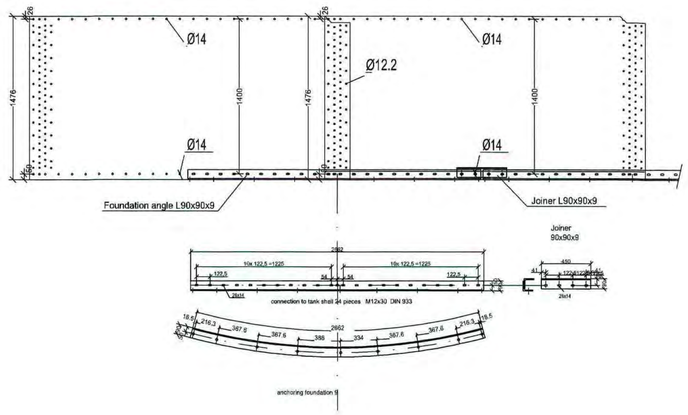

THE SCOPE OF THIS ENGINEERING STAMP IS FOR THE DESIGN OF THE FOLLOWING ITEMS:
TANK WALLS & RELATED CONNECTIONS,
ROOF FRAMING & RELATED CONNECTIONS, AND
FOUNDATION ANCHORAGE.

KEVIN M. McCORMICK
081.007526
LICENSED STRUCTURAL ENGINEER
STATE OF ILLINOIS
Signed 4-30-2021
Exp. 11-30-2021

MILLER CONSULTING ENGINEERS

Diese Zeichnung ist unser Eigentum.
Unbefugte Benutzung ist verboten
und wird gerichtlich verfolgt.

This drawing remains our property.
Its use without due authority is forbidden
and will lead to legal action.

Bezeichnung / designation
Foundation angle 90x90x9
D= 10,25 m

Zust	Änderung/Change	Datum	Name		Datum /Date	Name
				worked on	04.01.2021	LR
				examined		
				standard		

Schumann Tanks USA
Schumann Tanks USA Corp.
777 Brickell Avenue, Suite 500
Miami, FL 33131 USA

Maßstab / Scala : 1:50 / Architectural D

Projekt / Project:
Chicago

Kunde / customer:
Green Arrow

Drawing Index:
07.2

Zeichnungs-Nr. / design number:
2021/006-2.0 - 07

V.01

GREEN ARROW ENGINEERING	**Green Era** **Equipment Spec** **Tanks**	

T-105 Digester Tank

1.7 million gallons, Bolted Steel

REVISION LEVEL	DATE	DESCRIPTION	BY
0	11/24/18	INITIAL RELEASE	NMAST
1	5/1/20	REMOVED UNION LABOR REQ.	NMAST
2	8/1/21	UPDATED TO SCHUMANN TANK SPEC. ATTACHED STAMPED SUBMITTAL DRAWINGS. INCREASED PRODUCT TEMP RANGE TO 130F, (55C)	NMAST

GREEN ARROW ENGINEERING	**Green Era** **Equipment Spec** **Tanks**	

Section 1 - Basic Equip. Data		
1.0	Tag No.	T-105
1.1	Empty to	P-200 to screening S-205, prior to dewatering
1.2	Filling from	P-080AB from T-100

Section 2 – Vendor Info		
2.0	Manufacturer	Schumann Tanks USA, 777 Bruckell Ave, Suite 500, Miami, FL 33131
2.1	Type	Bolted Steel, Rolled Tapered Panel Design, carbon steel, porcelain coated
2.2	Sales Contact	Lucas Rudler, lucas.rudler@schumanntanksusa.com

Section 3 – Fluid Properties								
3.0	Fluid Desc.	Digestate						
3.1	TS%	3 - 6%	3.2	pH range	7.5 – 8.0 SU	3.3	Temp. range	90-130° F
3.4	S.G.	1.0	3.5	Viscosity	100 cPs	3.6	Phase	Liquid
3.7	Solids Handling, Max Spherical Size		1/4 inch					
3.8	Abrasives	0.25% grit by weight						
3.9	Corrosives	Ammonia<4000 PPM, H2S<500 PPM, long chain fatty acids <0.5% v/v						
3.10	Notes	SikaFlex TS Plus mastic has been used successfully for this service at other facilities.						

Section 4 – Tank Geometry		
4.0	Tank Quantity:	1
4.1	Construction Method:	Rolled Tapered Panel (RTP) Bolted Design – For more information please review the following TCAG brochures "*Liquid Containment Solutions*" & "*RTP Design vs. API-12B*"
4.2	Materials of Construction:	Carbon steel
4.3	Nominal Inside Diameter:	75.66 feet (23.06 m)
4.4	Nominal Eave Height:	53.05 feet (16.17 m)
4.5	*Note: Nominal eave height is measured from the top of finished concrete floor to top of eave angle*	
4.6	Bottom Style:	**Base Angle** supplied by Schumann and installed by Schumann
4.7	Tank Supported By:	Reinforced concrete foundation designed & supplied / installed by others meeting the requirements of AWWA D103-09
4.8	Roof Style:	Steel cone (15°) slope, approx. 3.25-in rise to 12-in run
4.9	Roof Support Style:	Self-supported with HDG external rafters and 316SS roof panels for digester applications
4.10	Usable Capacity:	1,683,171 US gallons based on 36" total freeboard (50.05' fill level)
4.12	Gallons per foot:	33,629.8 gal/ft

GREEN ARROW ENGINEERING	**Green Era** **Equipment Spec** **Tanks**	

Section 5 – Design Criteria				
5.0	Design Specifications:	AWWA D103-09		
5.1	Seismic Design:	AWWA D103-09: S_S=16.8%g, S_1=5.7%g, Site Class=D, Use Group=3, I=1.50		
5.2	Wind Design:	ASCE 7-16 Table 29.1-2: 120mph, Exp. C		
5.3	Roof Live Load:	20 pounds per square foot		
5.4	Ground Snow Load:	20 pounds per square foot (24 PSF per ASCE 7-16, Sec 7.3.4)		
5.5	Product Stored:	Wastewater		
5.6	Specific Gravity:	1.10 assumed		
5.7	Product pH Range:	3 to 11 assumed		
5.8	Design Pressure:	7.0 ounces per square inch	12.0 inWC	30 millibar
5.9	Design Vacuum:	1.2 ounces per square inch	2.0 inWC	5 millibar
5.10	Operating Pressure:	5.8 ounces per square inch	10.0 inWC	25 millibar
5.11	Operating Vacuum:	Atmospheric	0 inWC	0 millibar
5.12	Crack Pressure PRV:	6.0 ounces per square inch	10.4 inWC	26 millibar
5.13	Crack Vacuum Pressure:	(-) 0.5 ounces per square inch	(-) 0.87 inWC	(-) 2 millibar
5.14	Design Temperature:	Ambient up to 50° C, (122° F) Schumann quote		
5.15	Corrosion Allowance:	Not applicable		
5.16	Tank Empty Weight:	360,108 pounds		
5.17	Jobsite Location:	Chicago, IL		
5.18	Agitator:	Roof Mounted, GAE to provide tank mfg. with loads and mounting requirements. Agitator provided by Others.		

Section 6 - Sealants / Gaskets / Hardware		
6.0	Roof Sealant:	Sika Flex TS +
6.1	Sidewall Sealant:	Sika Flex TS +
6.2	Hardware:	Plastic encapsulated grade 8 bolts with flat washers & hex nuts. Hardware is factory coated with plating technology designed for long life and superior corrosion protection. Coating Spec JS1000 for bolts, flat washers, and hex nuts.

GREEN ARROW ENGINEERING	**Green Era** **Equipment Spec** **Tanks**	

Section 7: Coatings		
7.0	Panel Coating	CS S355/S420/S460/S700 with 1-layer KTL cathodic dip lacquer- or Interpon epoxy coat ~40mm as primary corrosion protection. Upper 2 rings are uncoated 316 stainless to 9.4 feet from eave. Roof also in 316 SS.

Section 8: Tank Nozzles / Accessories		
	Qty	**Description**
8.0	1	Mfg. logo (installed on top ring), optional
8.1	1	Liquid tank nameplate
8.2	1	24" Diameter combination manway / pressure relief valve
8.3	1	24" Diameter shell manway with bolt-on hinged cover
8.4	1	1" Diameter 150# RFSO single flanged nozzle located in tank sidewall
8.5	5	6" Diameter 150# RFSO **double** flanged nozzle located in tank sidewall
8.6	2	1" Diameter 150# RFSO single flanged hillside nozzle located in tank roof
8.7	2	6" Diameter 150# RFSO single flanged hillside nozzle located in tank roof
8.8	2	12" Diameter 150# RFSO single flanged hillside nozzle located in tank roof
8.9	1	24" Diameter 150# RFSO single flanged nozzle located in tank roof for mixer attachment
8.10	1	1" Diameter 3000# half coupling mounted in blind flange and bolted to tank sidewall
8.11	1	Outside caged ladder with lockable hoop and (1) intermediate rest platform – OSHA – HDG – Includes safety gate at entrance point(s).
8.12	1	36" wide bar-grated walkway with handrails from eave to center working platform – (TC Standard Construction)
8.13	1	5' x 5' square bar-grated platform with perimeter handrails (TC Standard Construction)
8.14	2	Pie-shaped bar-grating sections on either side of walkway - HDG
8.15	1	Cross-over connection to tie-in with T-105 by catwalk.
8.16	3	Baffle plate assembly per GAE agitator spec.
8.16	Incl.	Final drawings and engineering calculations to include a **IL** P.E. stamp
8.17	Incl.	Set of blind flanges nozzles for water/hydrostat test
8.18	**Note**: 1. All nozzles 5" diameter and less - coated exterior / pipe is stainless steel 2. See submitted Green Arrow tank drawing for accessory locations.	

Section 9: Installation Services		
	Qty	**Description**
9.0	Incl.	Hydrostatic Leak Test
9.1	Incl.	Air Pressure Test – *(Water must be available and the tank must be filled to overflow level. Once the tank is filled with water, the tank will be brought to test pressure (+12 inWC) and will be expected to hold pressure for three hours and test vacuum (-2 inWC) for one hour.*

Section 10: Foundation Design		
	Qty	**Description**
10.0	-	Provided by Others.

Section 11: Insulation – by others		
	Qty	**Description**
11.0	1	Furnish and install vertical seam tank sidewall insulation, utilizing 2-inch polyisocyanurate insulation board bonded to white polyester-coated 24 ga. aluminum siding, cable stayed. Siding shall be mechanically seamed and double-folded. Furnish all flashing, fasteners, and sealant.

Section 12: Site Specific Labor Requirements				
		Yes	**No**	**Not Determined, quote both ways**
12.0	Prevailing Wage Required		x	
12.1	Union Contractors Required		x	

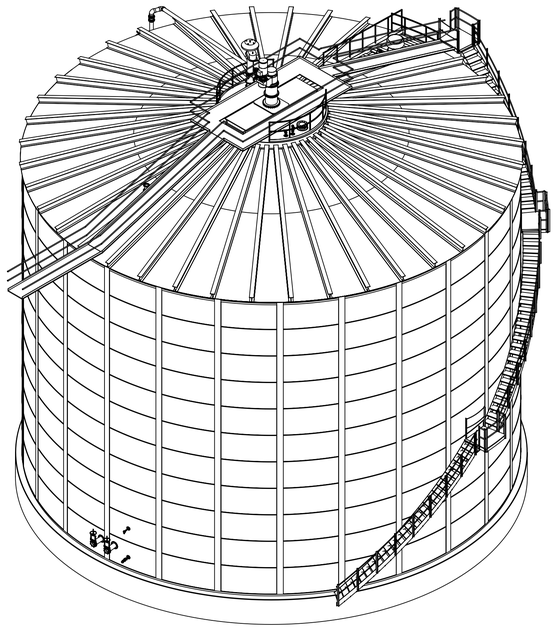

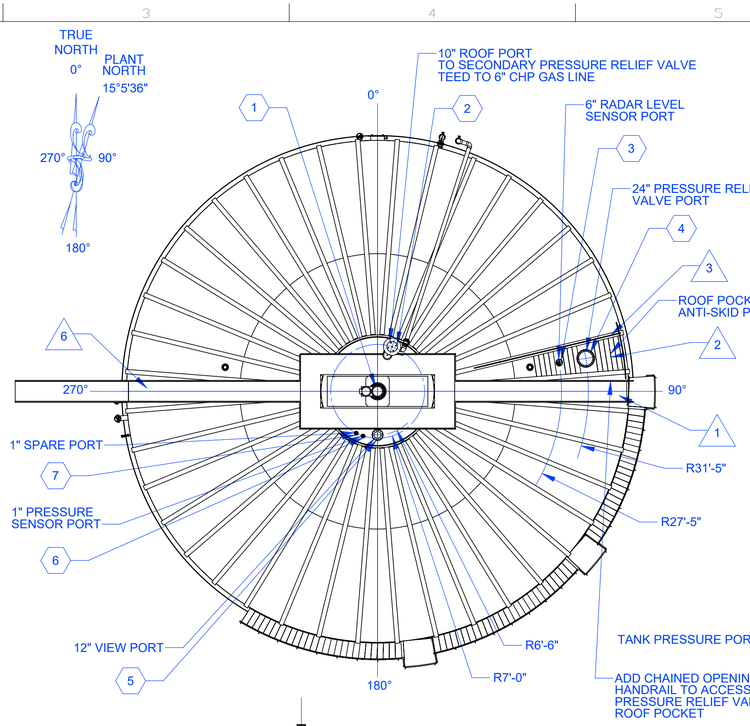

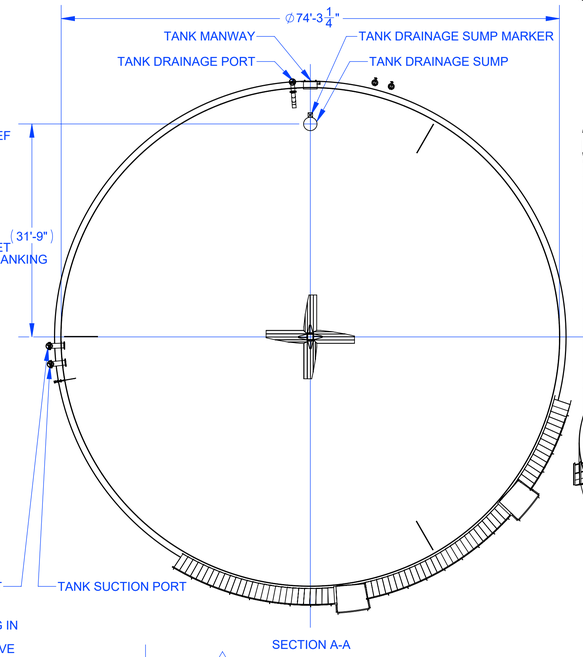

SECTION A-A

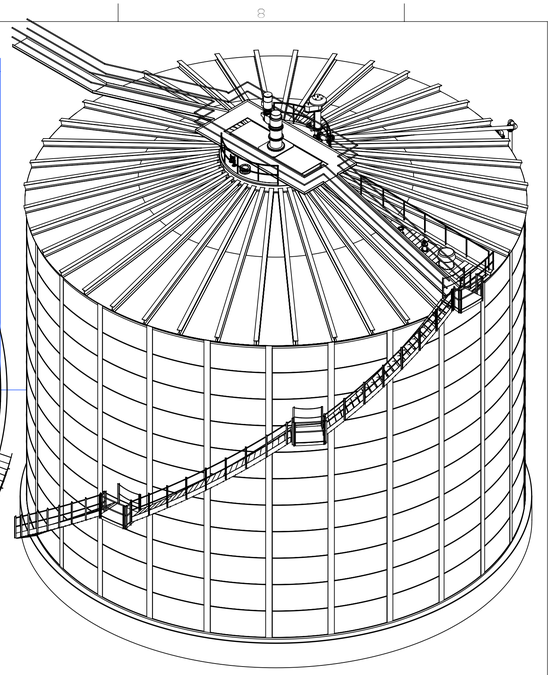

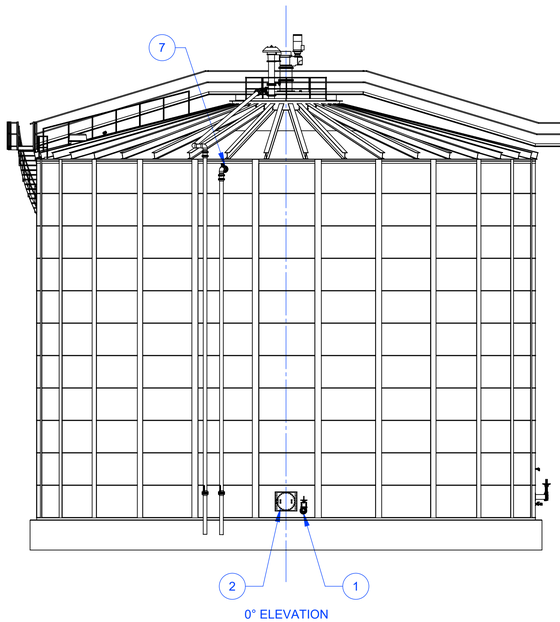

0° ELEVATION

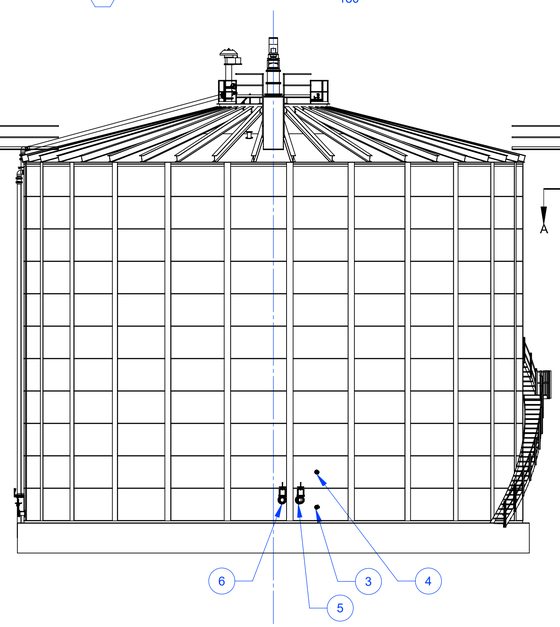

270° ELEVATION

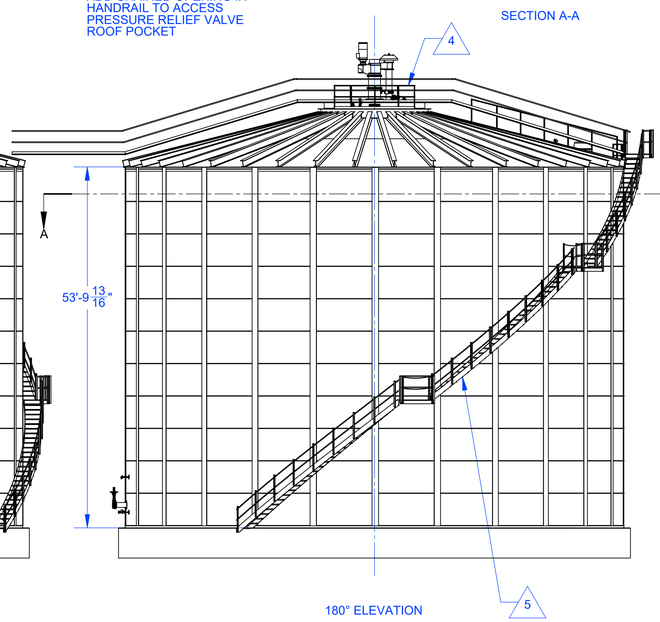

180° ELEVATION

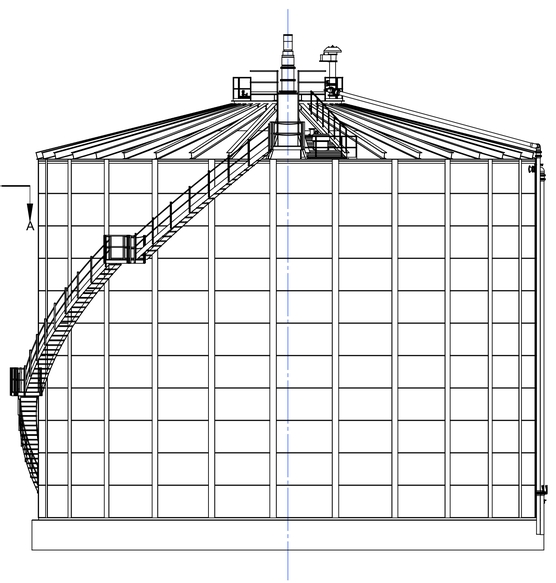

90° ELEVATION

TANK SIDEWALL PORTS (X)							
ITEM	DESCRIPTION	PORT PIPING SIZE	POLAR LOCATION	ELEVATION	IS TANK PORT DOUBLE -FLANGED?	INSIDE FLANGE LENGTH	OUTSIDE FLANGE LENGTH
1	TANK PORT - DRAINAGE	6"	356°	1' - 4 1/2"	YES	6"	10"
2	TANK MANWAY	24"	0°	2' - 9"	NO	-	STD
3	TANK PORT - LEVEL PRESSURE SENSOR	1"	260°	2' - 4"	NO	-	7"
4	TANK PORT - TEMPERATURE SENSOR	1" NPT	260°	7' - 7"	NO	-	STD
5	TANK PORT - PUMP SUCTION	8"	264°	3' - 5"	YES	6"	20"
6	TANK PORT - PUMP PRESSURE	8"	268°	3' - 5"	YES	6"	20"
7	TANK PORT - GAS OUTLET	6"	14.25°	52' - 3 1/2"	YES	6"	10"

TANK ROOF PORTS (Y)						
ITEM	DESCRIPTION	PORT SIZE	POLAR LOCATION	DISTANCE FROM TANK CENTER	IS TANK PORT DOUBLE -FLANGED?	FLANGE LENGTH
1	TANK MIXER MOUNTING MANWAY	54"x180°	CTR	CTR	-	STD
2	TANK PORT - GAS OUTLET	10"	18°	7' - 0"	NO	10"
3	TANK PORT - RADAR LEVEL SENSOR	6"	81°	27' - 5"	NO	10"
4	TANK PORT - PRESSURE RELIEF VALVE	24"	81°	31' - 5"	NO	10"
5	TANK PORT - VIEWING PORT	12"	180°	6' - 6"	NO	6"
6	TANK PORT - GAS PRESSURE	1"	198°	7' - 0"	NO	6"
7	TANK PORT - SPARE	1"	207°	7' - 0"	NO	6"

TANK ACCESSORIES (Z)				
ITEM	DESCRIPTION	SIZE	POLAR LOCATION	ELEVATION FROM TOP OF CONCRETE
1	ROOF DECKING PATH w/ HANDRAIL FROM STAIR PLATFORM TO TANK CENTER	-	90°	-
2	ROOF POCKET ANTI-SKID PLANKING	-	81°	-
3	ROOF PORT POCKET HANDRAIL	-	81°	-
4	TANK ROOF CENTER SAFETY RAIL w/ KICKPLATE	AS REQUIRED	-	-
5	TANK STAIRWAY FROM GROUND TO ROOF w/ REST PLATFORMS AS REQUIRED	-	-	-
6	ROOF DECKING PATH w/ HANDRAIL FROM TANK CENTER TO CROSS-OVER PLATFORM TO BIOMASS TANK T-100	-	270°	-

NOTES:
DRAWING BASED ON TANK CONNECTION LIQUID STORAGE TANK
TANK DIAMETER: 74'-9 1/4"
TANK HEIGHT: 53'-9 13/16"
MATERIAL STORED: WASTEWATER
USABLE CAPACITY: 1,772,162 GALLONS
BASED ON: 3' FREEBOARD
SPECIFIC GRAVITY: 1.10
DESIGN CODE: AWWA D103-9
ROOF LIVE LOAD: 20 POUNDS PER SQUARE FOOT

OPERATING PRESSURE / VACUUM: +10" WATER COLUMN / -1" WATER COLUMN
(+6.000 / -0.500 OUNCES PER SQUARE INCH)

REFERENCE DQ-903-2 FOR ROOF PORT ACCESSORY DETAILS

NO.	DATE
BY	
REVISION	
NO.	DATE
BY	
REVISION	
NO.	DATE
BY	
REVISION	

GREEN ARROW ENGINEERING
1680 MADISON AVENUE
WOOSTER, OH 44691

THIS DRAWING CONTAINS VALUABLE CONFIDENTIAL AND PROPRIETARY INFORMATION THAT BELONGS TO GREEN ARROW ENGINEERING, LLC ("GAE"), AND IS SUBJECT TO A CONFIDENTIALITY AND NONDISCLOSURE AGREEMENT. GAE IS THE AUTHOR AND OWNER OF THIS DRAWING, AND RETAINS ALL COMMON LAW, STATUTORY AND OTHER RIGHTS, INCLUDING COPYRIGHTS, RESPECT HERETO, INCLUDING COPYRIGHTS. THE INFORMATION CONTAINED HEREIN MAY NOT AT ANY TIME BE USED FOR ANY UNAUTHORIZED PURPOSE, NOR REPRODUCED BY OR PROVIDED TO ANY THIRD PARTY, WITHOUT THE PRIOR WRITTEN CONSENT OF GAE.

©2018, GREEN ARROW ENGINEERING, LLC. ALL RIGHTS RESERVED.

GREEN ERA DIGESTER FACILITY
1.77MGAL TANK T-105

GREEN ERA SUSTAINABILITY, LLC
650 WEST BIRD STREET
CHICAGO, IL 60620

AREA	CHECKED BY
	NM
JOB NO.	DRAWN BY
1512	BR
SCALE	DATE
3/32" = 1'-0"	11/30/2018
DWG NO.	
1512-5009-012	
SHEET NO.	
DQ-903-1	

C:\Users\Brian.George.Brian\Documents\ACA\Green Era\1.77mgal tank ASSY - Green Era 152

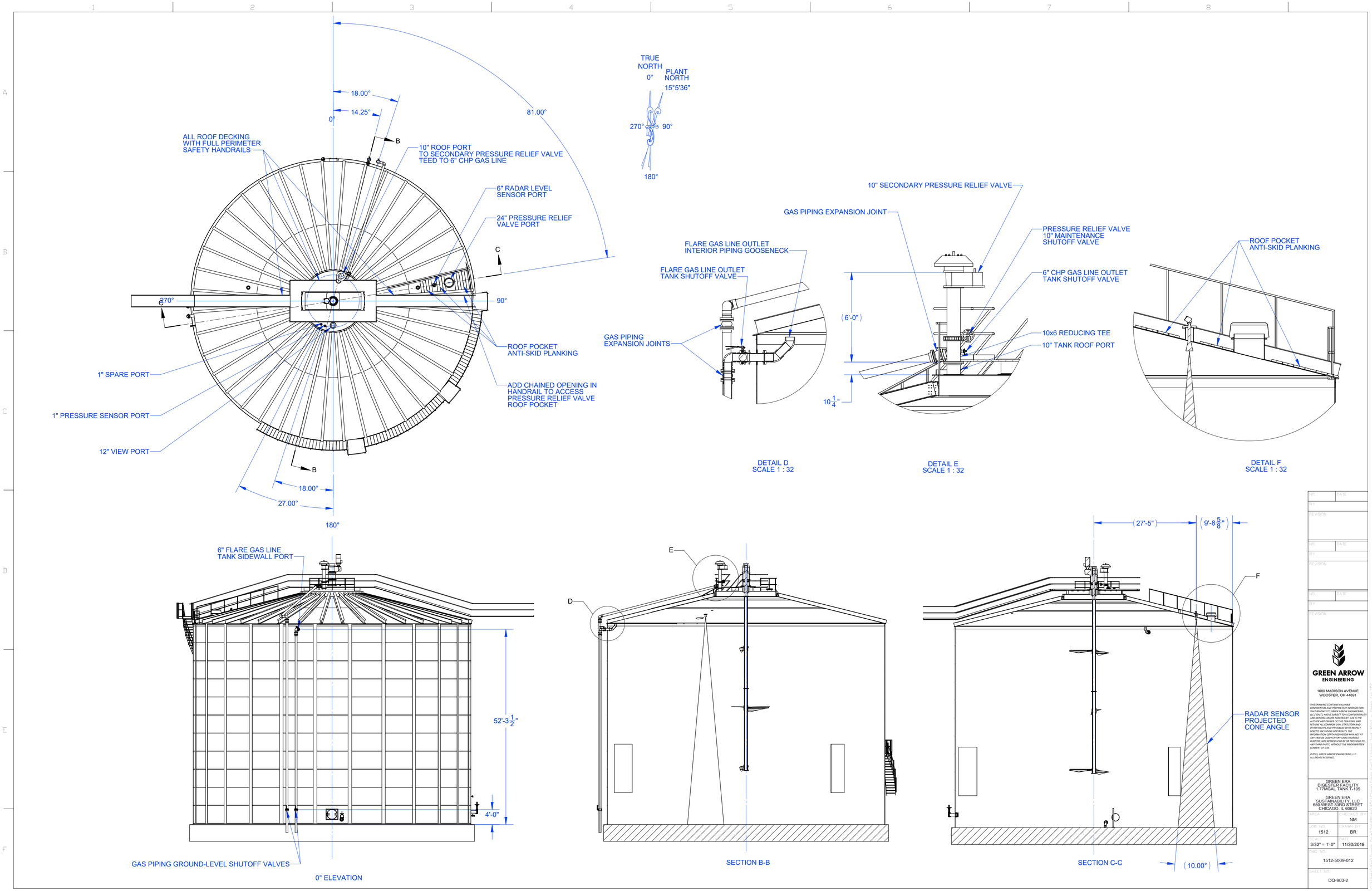

NO.	DATE
BY	
REVISION	

NO.	DATE
BY	
REVISION	

NO.	DATE
BY	
REVISION	

GREEN ARROW ENGINEERING

1680 MADISON AVENUE
WOOSTER, OH 44691

THIS DRAWING CONTAINS VALUABLE CONFIDENTIAL AND PROPRIETARY INFORMATION THAT BELONGS TO GREEN ARROW ENGINEERING, LLC ("GAE"), AND IS SUBJECT TO A CONFIDENTIALITY AND NONDISCLOSURE AGREEMENT. GAE IS THE AUTHOR AND OWNER OF THIS DRAWING, AND RETAINS ALL COMMON LAW, STATUTORY AND OTHER RIGHTS AND PRIVILEGES WITH RESPECT HERETO, INCLUDING COPYRIGHTS. THE INFORMATION CONTAINED HEREIN MAY NOT AT ANY TIME BE USED FOR ANY UNAUTHORIZED PURPOSE, NOR REPRODUCED BY OR PROVIDED TO ANY THIRD PARTY, WITHOUT THE PRIOR WRITTEN CONSENT OF GAE.

©2015, GREEN ARROW ENGINEERING, LLC. ALL RIGHTS RESERVED.

GREEN ERA
DIGESTER FACILITY
1.77MGAL TANK T-105

GREEN ERA
SUSTAINABILITY, LLC
650 WEST 83RD STREET
CHICAGO, IL 60620

AREA	CHECKED BY
	NM
JOB NO.	DRAWN BY
1512	BR
SCALE	DATE
3/32" = 1'-0"	11/30/2018
DWG NO.	
1512-5009-012	
SHEET NO.	
DQ-903-2	

C:\Users\Ben\Google Drive\SolidWorks\ADE\Clean\Green Era\1.77mgal Tank ASSY - Green Era 102

mixing direction cw
Bobcat opening panel #6
end of stairway
Route 1/2-inch PEX water line from port N9 to port N19 on the inside of the roof. Provide hangers as needed. Approximate path shown in Orange.
Bobcat opening panel #6 Ring 11. or 11. and 12.
It is possible to remove 1. If this opening is not big enough you can remove 2. additionally
Detail N1 Drainage 6"/DN150
Detail N3 Spare 10"/DN250 N4 Pump Pressure 10"/DN250 N5 Pump Suction 10"/DN250
Detail N6 Level Pressure Sensor 1"/DN25
Detail N7 Temperature Sensor 1. 1"NPT/DN25 N8 Temperature Sensor 2. 1"NPT/DN25 N9 Water Inlet 1"NPT/DN25 N25 Glycol Supply Manifold Relief 1"NPT/DN25 N26 Glycol Return Manifold Relief 1"NPT/DN25
Detail N10 Glycol Supply 4"/DN100 N11 Glycol Return 4"/DN100
Detail N12 Overflow 6"/DN150
Detail N15 Spare 6"/DN150 N16 Tank to Tank PHII 6"/DN150 N17 Radar Level Sensor 6"/DN150
Detail N23 Tank to Tank Gas 6"/DN150
Detail N18 PRV 24"/DN600
Detail N19 Roof Hydrant 6"/DN150 N20 Viewing Port 12"/DN300
Detail N21 Gas Pressure 1. 1"/DN25 N22 Gas Pressure 2. 1"/DN25
Detail N24 Gas Outlet 2. 6"/DN150
Detail N14 Gas Outlet 2. 10"/DN250
Tank Sidewall Ports
Tank Roof Ports
Static changes reserved.
Plate thickness according to static!
1° = U/360°
1° = 201,23 mm
Diese Zeichnung ist unser Eigentum.
Unbefugte Benutzung ist verboten
und wird gerichtlich verfolgt.
This drawing remains our property.
Its use without due authority is forbidden
and will lead to legal action.
Bezeichnung / designation:
2.0 Anaerobic Digester
D= 23,06 m H= 16,17 m
Maßstab / Scala : 1:10/ A3
CE 2451
Projekt / Project: Chicago
Auftraggeber / customer: Green Arrow
Removed Cladding Detail 16.03.21 LR
Relabeled N3/N4/N5 16.03.21 LR
P2/N25/N26/N9/N1/N2 15.03.21 TP
P2/N12/N7/N8/N9 11.03.21 TP
Revisions 2-26-2021 05.03.21 TP
15.02.21 TP
Zust Änderung/Change Datum Name
worked on
examined
standard
Schumann Tanks USA
Schumann Tanks USA Corp.
777 Brickell Avenue, Suite 500
Miami, FL 33131 USA
Projektnummer / project Number:
2021/006-1.0/01
V.06
DIN EN 1090-2 Tolerances Basic tolerances Tolerances class
DIN EN ISO 13920 General tolerances welded constructions
DIN EN ISO 5817 Welding - quality levels, irregularities, (supporting construct)
Regulations and procedures DIN EN ISO 4063:135 MAG
base material S 235 JR
filler material DIN EN ISO 14341-G3Si1
Material: S355 KTL
Procedures: Lasercut
Rolling: Y N Rolling Diameter see designation
Welding testing EWS/IWS Date: Name:

Pos. 1 Glattflansch
DN 600 PN 10

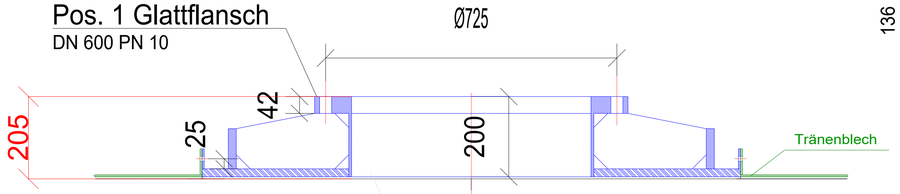

1x Pos. 2
Rohr D=610

4x Pos. 4.1
Bl.10

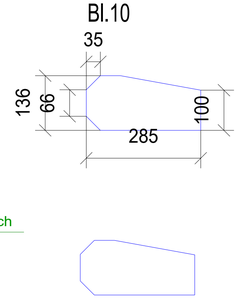

4x Pos. 4.2
Bl.10

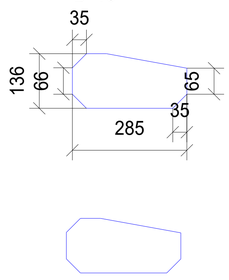

4x Pos. 5
Bl.10

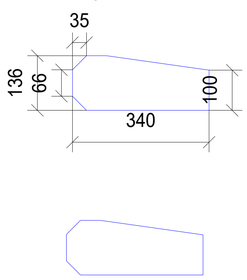

4x Pos. 6
Bl.10

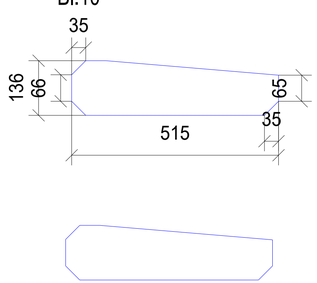

4x Pos. 7
Bl.10

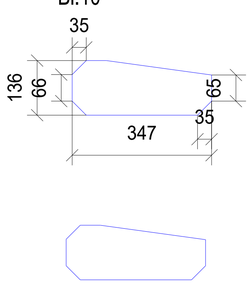

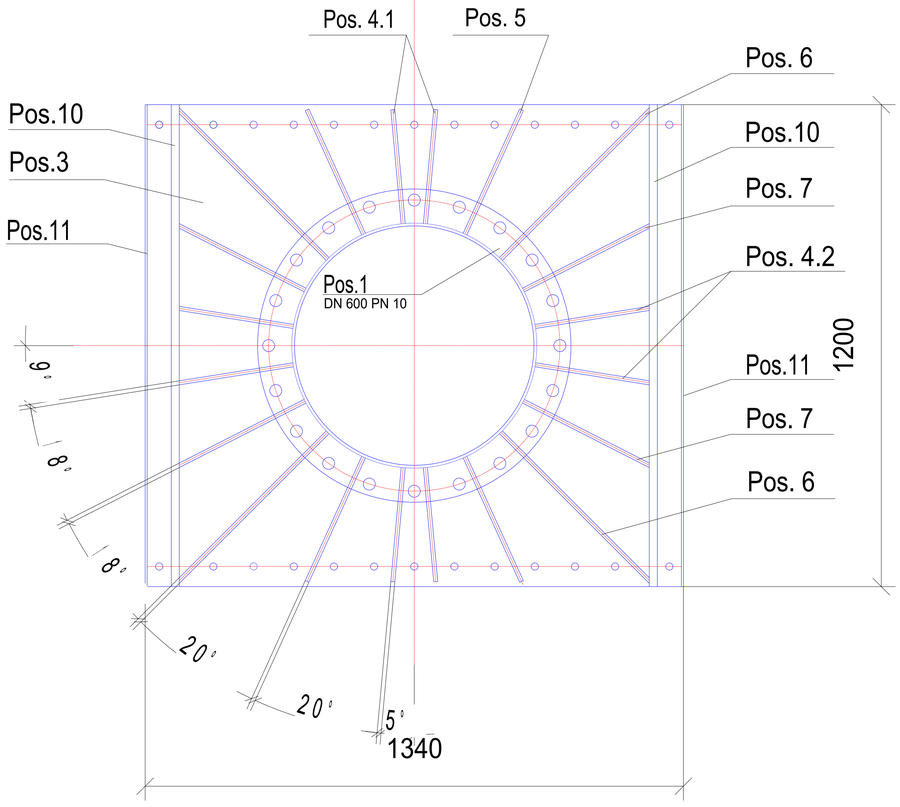

1x Pos. 3
Bl.20

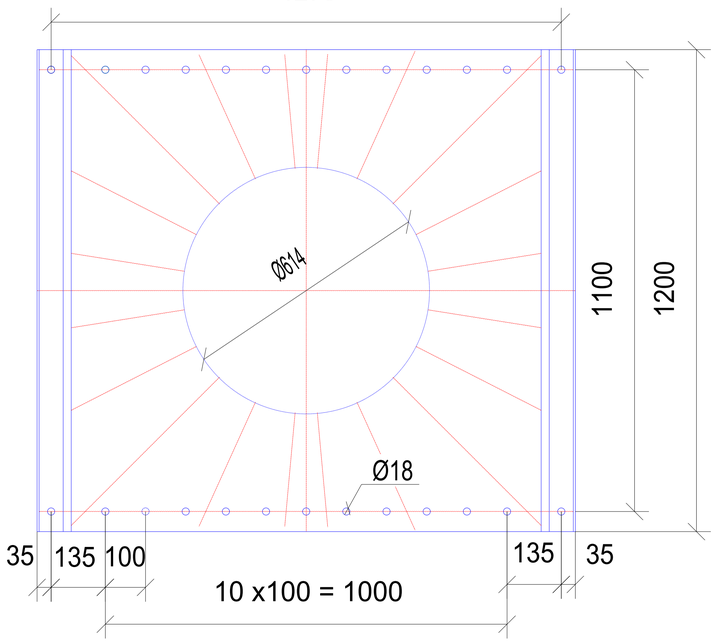

1x Pos. 3 / Laserteil
Bl.20

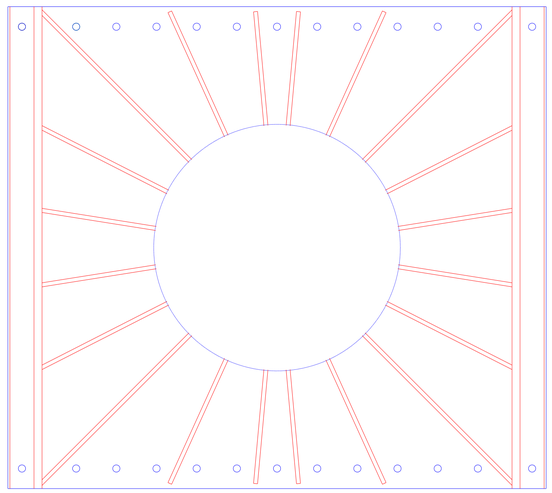

1x Pos. 2 / Rohr D=610 walzen

2x Pos.10
Fl. 100x20

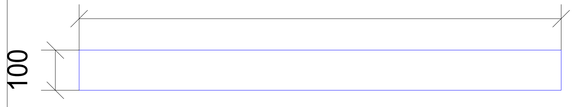

2x Pos.11
Fl. 50x5

12 x 95 = 1140

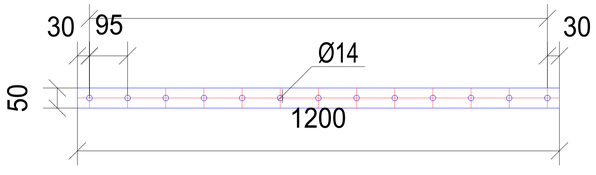

V Nähte 6mm
Kehlnähte 5mm
Bewertungsgruppe C
V Nähte sind flach einzuebnen
Allgemeintoleranz für Schweisskonstruktion nach DIN ISO 13920: Toleranzklasse C
Schweißverfahren nach DIN ISO 4063: 135
Zusatzwerkstoff: G3Si1 EN ISO
Grundwerkstoff: S235 JR
Prüfverfahren: VT,

Diese Zeichnung ist unser Eigentum.
Unbefugte Benutzung ist verboten
und wird gerichtlich verfolgt.

This drawing remains our property.
Its use without due authority is forbidden
and will lead to legal action.

designation: Rührwerksflansch DN 600/PN10

jardstick: 1:20 / A2

Project: X

customer: X

design number: X

	date	Name
worked on	13.03.14	Hom
examined		
standard		

Zust	Änderung	Datum	Name

Schumann Tanks
Schumann Tanks GmbH
Steinfeldstraße 3
D-39179 Barleben
Fon: +49(0) 39203 . 649 710

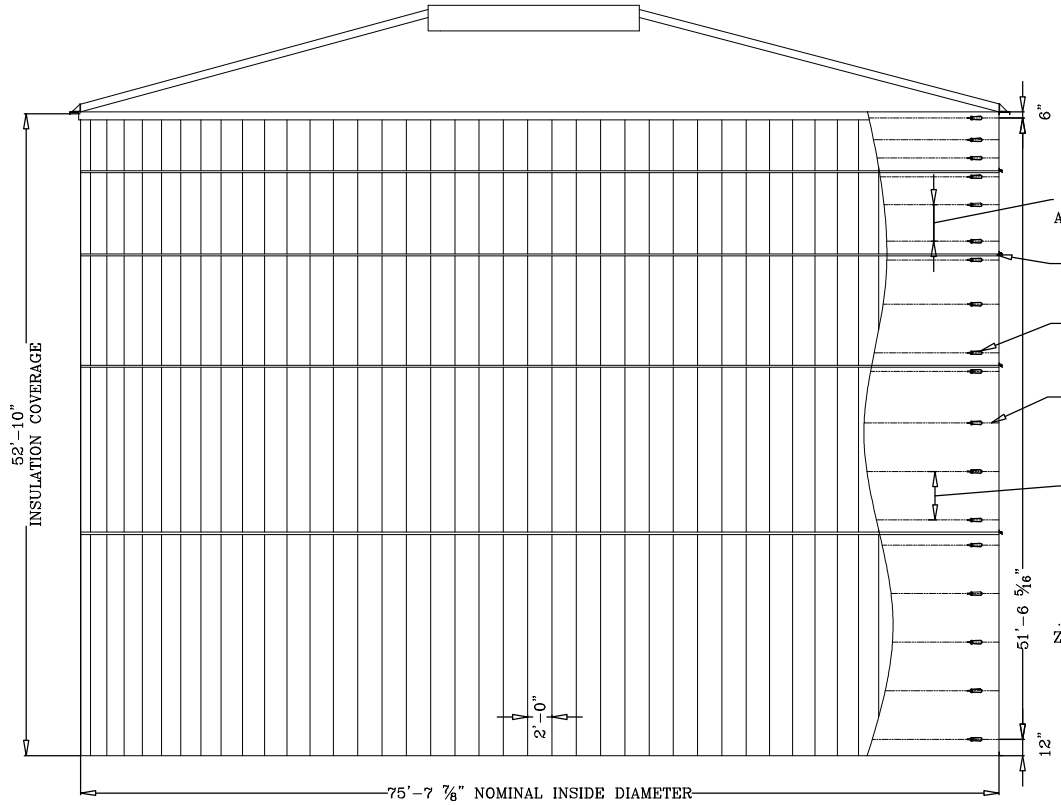

TYPICAL TANK ELEVATION
BREAKOUT TO SHOW INTERNAL SECUREMENT

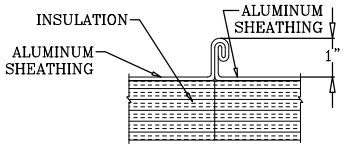

DETAIL "A"
DOUBLE FOLDED SEAM

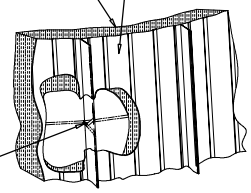

DETAIL "B"
ISO VIEW

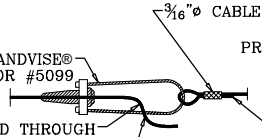

DETAIL "S"
STRANDVISE® CONNECTION

TYPICAL SECTION AT ROOF

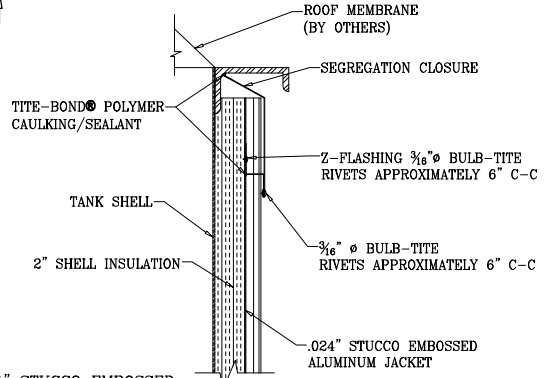

TYPICAL SECTION AT WIND STIFFENER

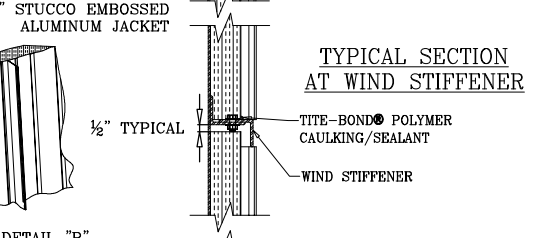

TYPICAL SECTION AT BASE

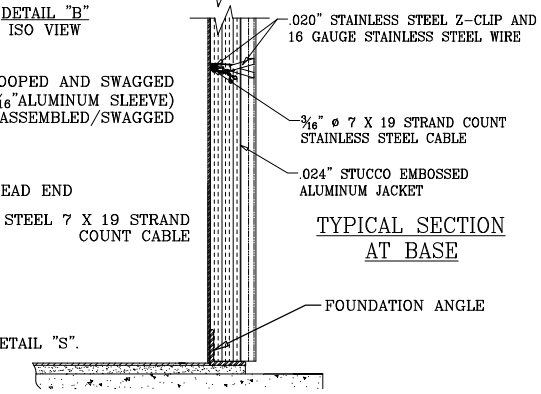

SHELL SYSTEM COMPONENTS

1. .024" STUCCO EMBOSSED ALUMINUM (TBD) POLYESTER COATING WITH POLYISOCYANURATE FOAM –DOUBLE FOLDED VERTICAL STANDING SEAM JACKET–SEE DETAIL "A".
2. 2" THICK SHELL PANEL [R13.1] x 24" WIDE DOUBLE FOIL –FACED POLYISOCYANURATE FOAM INSULATION LAMINATED DIRECTLY TO THE JACKET.
3. 3/16"ø STAINLESS STEEL ATTACHMENT CABLES, STRAPPED TO TANK SHELL, APPROXIMATELY 4'-0" C-C; TENSIONED AND SECURED WITH HIGH STRENGTH STRANDVICE SEE DETAIL "S".
4. STAINLESS STEEL TIE WIRES ATTACHED TO CABLES WITH STAINLESS STEEL CLIPS AND SECURED WITHIN PANEL SEAMS. SEE DETAIL "B".

SUBMITTAL APPROVAL
☐ COLOR: TBD — WHITE
☐ REVISE AND RESUBMIT
☐ APPROVED WITH COMMENTS
☐ APPROVED WITH NO COMMENTS
SIGNATURE _____ DATE: _____

APPROVED
BY: NED MAST 06/21/2021

REVISION NUMBER						NOTES

COMPANY CONFIDENTIAL

This document containing proprietary information of Climalock, L.L.C. is transmitted to you in confidence and trust and is to be returned upon request. Its contents may not be disclosed in whole or in part to others or used for other than the purpose for which transmitted without the prior written permission of Climalock, L.L.C..

GREEN ARROW ENGINERRING
GREEN ERA DIGESTER FACILITY
CHICAGO, IL

PROJECT NO.:	DWG NO.:	OF	SCALE:	REV.:	BY:	DATE:	CHKD:	DATE:
210059	21-615GE1-2	2	NTS	N/A	CL	05/17/2021		

DESCRIPTION: VERTICAL STANDING SEAM SYSTEM
BOLTED STEEL (DIGESTER TANK)75'-7 7/8"ø X 53'-0 5/16"

SHEET TITLE: GENERAL ELEVATION

CLIMALOCK, L.L.C.
34405 Highway PP
Warsaw, MO 65355
(660)438-5300
(660)438-5353

STRUCTURAL NOTES:

DESIGN PARAMETERS
THE FOLLOWING DRAWINGS ARE FOR (2) STEEL BOLTED TANKS. TANKS ARE BEING FABRICATED, AND INSTALLED BY MANUFACTURER. TANKS ARE DESIGNED BASED ON THE EUROPEAN CODES DIN EN 1991-4: 2010-12, DIN EN 1993-1-1: 2010-12, DIN EN 1993-1-8: 2010-12, AND DIN EN 1993-4-2 2017-19. SEISMIC, WIND, AND SNOW LOADS ARE BASED ON THE ASCE 7-16. SEISMIC REQUIREMENTS ARE DESIGNED TO MEET AWWA D103-09.

GENERAL
THE CONTRACTOR IS RESPONSIBLE FOR VERIFICATION AND CORRELATION OF ALL ITEMS AND WORK NECESSARY FOR COMPLETION OF THE PROJECT AS INDICATED BY THE CONTRACT DOCUMENTS. SHOULD ANY QUESTION ARISE REGARDING THE CONTRACT DOCUMENTS OR SITE CONDITIONS, THE CONTRACTOR SHALL REQUEST INTERPRETATION AND CLARIFICATION FROM THE ENGINEER BEFORE BEGINNING THE PROJECT. THE ABSENCE OF SUCH REQUEST SHALL SIGNIFY THAT THE CONTRACTOR HAS REVIEWED AND FAMILIARIZED HIMSELF WITH ALL ASPECTS OF THE PROJECT AND HAS COMPLETE COMPREHENSION THEREOF. THE CONTRACTOR SHALL BE RESPONSIBLE FOR CONFORMANCE TO ALL SAFETY REGULATIONS DURING CONSTRUCTION.

THE CONTRACT DRAWINGS AND SPECIFICATIONS REPRESENT THE FINISHED STRUCTURE. UNLESS OTHERWISE SPECIFICALLY NOTED, THEY DO NOT INDICATE THE METHOD OF CONSTRUCTION OR CONSTRUCTION LOADS. ONLY THE CONTRACTOR SHALL PROVIDE ALL METHODS, DIRECTION AND RELATED EQUIPMENT NECESSARY TO PROTECT THE STRUCTURE, WORKMEN AND OTHER PERSONS AND PROPERTY DURING CONSTRUCTION. THE CONTRACTOR SHALL, AT HIS OWN EXPENSE, ENGAGE PROPERLY QUALIFIED PERSONS TO DETERMINE WHERE AND HOW TEMPORARY PRECAUTIONARY MEASURES SHALL BE USED AND INSPECT SAME IN THE FIELD. ANY MATERIAL NOT AS SPECIFIED OR IMPROPER MATERIAL INSTALLATION OR WORKMANSHIP SHALL BE REMOVED AND REPLACED WITH SPECIFIED MATERIAL IN A WORKMANLIKE MANNER AT THE CONTRACTOR'S EXPENSE.

THESE PLANS, SPECIFICATIONS, ENGINEERING AND DESIGN WORK ARE INTENDED SOLELY FOR THE PROJECT SPECIFIED HEREIN. MILLER CONSULTING ENGINEERS DISCLAIMS ALL LIABILITY IF THESE PLANS AND SPECIFICATIONS OR THE DESIGN, ADVICE AND INSTRUCTIONS ATTENDANT THERETO ARE USED ON ANY PROJECT OR AT ANY LOCATION OTHER THAN THE PROJECT AND LOCATION SPECIFIED HEREIN. OBSERVATION VISITS TO THE JOB SITE AND SPECIAL INSPECTIONS ARE NOT PART OF THE STRUCTURAL ENGINEER'S RESPONSIBILITY UNLESS THE CONTRACT DOCUMENTS SPECIFY OTHERWISE.

NON-STRUCTURAL PORTIONS OF PROJECT, INCLUDING BUT NOT LIMITED TO PLUMBING, FIRE SUPPRESSION, ELECTRICAL, MECHANICAL, LAND USE, SITE PLANNING, EROSION CONTROL FLASHING AND WATER-PROOFING ARE BEYOND THE SCOPE OF THESE DRAWINGS AND ARE PROVIDED BY OTHERS.

TEMPORARY SHORING
WHEREVER SHORING IS REQUIRED, THE CONTRACTOR SHALL BE RESPONSIBLE FOR PROVIDING A SHORING SYSTEM THAT PREVENTS SETTLEMENT AND/OR DAMAGE TO EXISTING FACILITIES AND PROTECTS PERSONNEL, THE PUBLIC, AND THE BUILDING, SUPPORTING STREETS, WALKWAYS, UTILITIES, IMPROVEMENTS AND EXCAVATION AGAINST LOSS OF GROUND OR CAVING OF EMBANKMENTS DURING CONSTRUCTION, AS REQUIRED. THE CONTRACTOR SHALL LOCATE THE SYSTEM CLEAR WITHOUT OBSTRUCTION OF THE PERMANENT STRUCTURE AND TO PERMIT CONSTRUCTION TO PROCEED.

BUILDING CODE
ALL PHASES OF THE WORK SHALL CONFORM TO THE 2019 CHICAGO BUILDING CODE (CBC), BASED ON THE 2018 INTERNATIONAL BUILDING CODE (IBC), INCLUDING ALL REFERENCE STANDARDS, UNLESS NOTED OTHERWISE.

SPECIAL INSPECTION
SPECIAL INSPECTION AND/OR TESTING IS REQUIRED IN ACCORDANCE WITH IBC SECTION 1704. THE CONTRACTOR SHALL PROVIDE SUFFICIENT NOTICE TO ALLOW SCHEDULING OF SPECIAL INSPECTION. IT IS THE OWNER'S RESPONSIBILITY TO PROVIDE SPECIAL INSPECTION AND TESTING BY A QUALIFIED THIRD PARTY, SUCH AS A TESTING AGENCY REVIEWED BY THE ENGINEER.

INSPECTION AND TESTING OF TANKS
TEST AND INSPECT THE TANKS AS REQUIRED BY AWWA D103-09. TEST TANK TIGHTNESS WITH A TEST PRESSURE OF 12 INCHES OF WATER COLUMN (+30 MBAR) FOR THREE HOURS AND THE VACUUM PRESSURE OF -2 INCHES OF WATER COLUMN (-5 MBAR) FOR ONE HOUR. THE TANK TIGHTNESS TEST SHALL BE DONE WITH THE FULL DESIGN CONTENTS.

CONCRETE
DESIGNED BY OTHERS. FOUNDATION ANCHORAGE REQUIRES A MINIMUM COMPRESSIVE STRENGTH AT 28 DAYS, F'C = 3000 PSI.

STRUCTURAL STEEL
ALL STRUCTURAL AND MISCELLANEOUS STEEL SHALL CONFORM TO THE FOLLOWING MATERIAL STANDARDS:

W-SECTIONS:	EUROPEAN S235 (EQUIVALENT: ASTM A36)
PIPE:	EUROPEAN P235 (EQUIVALENT: ASTM A53, GRADE B, FY=35 KSI)
CHANNELS, ANGLES, BASE PLATES:	EUROPEAN S235 (EQUIVALENT: ASTM A36)
SHELL SHEETS:	EUROPEAN S355 (EQUIVALENT: ASTM A572, GRADE 50)
SHELL SHEETS (HIGH STRENGTH):	EUROPEAN S460 (EQUIVALENT: ASTM A572, GRADE 65)

UNLESS NOTED OTHERWISE, ALL BOLTS TO BE ISO R898 -
-CLASS 10.9 (MIN YIELD = 130 KSI (940 MPA), MIN TENSILE = 150 KSI (140 MPA)) WITH MATCHING NUTS.
-CLASS 8.8 (MIN YIELD = 90 KSI (640 MPA), MIN TENSILE = 110 KSI (800 MPA)) WITH MATCHING NUTS.
-A4-70 (MIN YIELD = 65 KSI (450 MPA), MIN TENSILE = 100 KSI (700 MPA)) WITH MATCHING NUTS.

UNLESS CONNECTION IS NOTED AS SLIP-CRITICAL OR PRETENSIONED, NUTS SHALL BE TIGHTENED TO A SNUG TIGHT CONDITION PER RESEARCH COUNCIL ON STRUCTURAL CONNECTIONS (RCSC) SPECIFICATION FOR STRUCTURAL JOINTS, SECTION 8.1. FOR SLIP-CRITICAL AND PRETENSIONED CONNECTIONS, INSTALLATION OF FASTENERS SHALL BE PER RCSC SECTION 8.2.

ALL STRUCTURAL STEEL SHALL HAVE ONE SHOP COAT OF PRIMER, EXCEPT SURFACES TO BE EMBEDDED IN CONCRETE OR MASONRY, OR STEEL TO BE GALVANIZED. EMBEDDED SURFACES SHALL BE FREE OF CONTAMINANTS. ALL EXPOSED STRUCTURAL STEEL TO HAVE ONE FINISH COAT OF RUST INHIBITING PAINT, COLOR BY OWNER.

ALL ZINC (GALV.) COATINGS ON IRON AND STEEL PRODUCTS SHALL CONFORM TO ASTM A123. REPAIRS OF GALVANIZED COATINGS ARE TO CONFORM TO ASTM A780. HOT DIP GALVANIZED COATINGS ON ASTM A325 FASTENER ASSEMBLIES SHALL CONFORM TO ASTM A153. SURFACE PREPARATION OF GALVANIZED STEEL TO RECEIVE A FINISH COAT OF PAINT SHALL CONFORM TO ASTM D6386.

STRUCTURAL STEEL WELDING
ALL WELDING SHALL CONFORM TO AMERICAN WELDING SOCIETY (AWS) D1.1 USING E70XX ELECTRODES. WELDING SHALL BE PERFORMED BY AWS CERTIFIED WELDERS FOR WELD TYPES SPECIFIED. WELD LENGTHS SHOWN ARE EFFECTIVE AS SPECIFIED PER THE SPECIFICATIONS OF THE AMERICAN INSTITUTE OF STEEL CONSTRUCTION (AISC). WHERE WELD LENGTHS ARE NOT SHOWN, THE WELD SHALL BE FULL LENGTH OF MEMBERS BEING JOINED. FIELD WELDING SYMBOLS HAVE NOT NECESSARILY BEEN INDICATED ON THE DRAWINGS. WHERE SHOWN, PROPER FIELD WELDING PER AWS D1.1 SHALL BE USED. WHERE NO FIELD WELDING SYMBOLS ARE SHOWN, IT IS THE CONTRACTOR'S RESPONSIBILITY TO COORDINATE THE USE OF SHOP AND FIELD WELDS.

ALL PARTIAL JOINT PENETRATION GROOVE WELD SIZES SHOWN ON THE DRAWINGS REFER TO THE EFFECTIVE THROAT THICKNESS. ALL BUTT WELDS SHALL BE FULL PENETRATION WELDS UNLESS NOTED OTHERWISE ON STRUCTURAL DRAWINGS. THE CONTRACTOR SHALL BE RESPONSIBLE FOR THE JOINT PREPARATION AND WELDING PROCEDURES THAN INCLUDE, BUT ARE NOT LIMITED TO: REQUIRED ROOT OPENINGS, ROOT FACE DIMENSIONS, GROOVE ANGLES, BACKING BARS, COPES, SURFACE ROUGHNESS VALUES, AND TAPERS AND TRANSITIONS OF UNEQUAL PARTS. ALL WELDS DENOTED AS 'DEMAND CRITICAL' SHALL BE MADE WITH A FILLER METAL CAPABLE OF PROVIDING A MINIMUM CHARPY V-NOTCH TOUGHNESS AS INDICATED IN SECTION 7.3B OF AISC 341.

ALL WELDS SHALL RECEIVE THE SAME FINISH COATING AS THE MEMBER BEING WELDED.

SCOPE
THE SCOPE OF THESE DRAWINGS INCLUDES THE DESIGN OF TWO STEEL BOLTED TANKS. THE TANKS ARE DESIGNED, FABRICATED AND INSTALLED BY SCHUMANN TANKS. TANK DESIGN IS BASED ON THE EUROPEAN STANDARDS NOTED. WHERE APPLICABLE, PROVISIONS FROM THE 2019 CHICAGO BUILDING CODE WITH MAY, 2020 SUPPLEMENT (BASED ON THE 2018 INTERNATIONAL BUILDING CODE) THAT APPLIES TO TANK DESIGN HAS BEEN INCLUDED. THIS INCLUDES DESIGN USING SEISMIC LOADING, WIND LOADING, SNOW LOADING, FLUID LOADS, LIVE LOAD, AND ANCHORAGE BASED ON THE ASCE 7-16 REQUIREMENTS.

DESIGN LOADS:

Building Code/ Reference Documents:										
AWWA D103-09 Factory-Coated Bolted Carbon Steel Tanks for Water Storage										
ASCE 7-16 Minimum Design Loads for Buildings and Other Structures										
BASIS OF STRUCTURAL DESIGN: DIN EN 1990:2010-12										
EUROCODE 1: ACTION ON STRUCTURES PART 4: SILOS AND TANKS: DIN EN 1991-4: 2010-12										
EUROCODE 3: DESIGN OF STEEL STRUCTURES- PART 1-1: GENERAL RULES AND RULES FOR BUILDINGS: DIN EN 1993-1-1: 2010-12										
EUROCODE 3: DESIGN OF STEEL STRUCTURES- PART 1-8: DESIGN OF JOINTS: DIN EN 1993-1-8:2010-12										
EUROCODE 3: DESIGN OF STEEL STRUCTURES- PART 4-2: TANKS: DIN EN 1993-4-2:2017-19										
Loading Used:	Standard Units					Metric Units				
Roof		DIGESTER TANK		BIOMASS TANK			DIGESTER TANK		BIOMASS TANK	
Snow:		24	psf	24	psf		1.15	kN/M^2	1.15	kN/M^2
Roof Live		20	psf	20	psf		0.96	kN/M^2	0.96	kN/M^2
Roof Dead		2.50	psf	2.50	psf		0.12	kN/M^2	0.12	kN/M^2
Agitator weight:		9442	lbs	7418	lbs		42	kN	33	kN
Agitator axial live:		5845	lbs	4632	lbs		26	kN	21	kN
Agitator Torque:		10252	ft lbs	6853	ft lbs		13.90	kN-m	9.02	kN-m
Agitator Bending:		10105	ft lbs	8438	ft lbs		13.70	kN-m	11.44	kN-m
Design Positive Pressures (OP)		52.20	psf	52.20	psf		2.50	kN/M^2	2.50	kN/M^2
Design Vacuum Pressures (UP)		-10.40	psf	-10.40	psf		-0.50	kN/M^2	-0.50	kN/M^2
Seismic Design Loads	Ss =	0.17	SM1 =	0.14		Ss =	0.17	SM1 =	0.14	
	S1 =	0.06	Sds =	0.18		S1 =	0.06	Sds =	0.18	
	SMS =	0.27	Sd1 =	0.09		SMS =	0.27	Sd1 =	0.09	
Response Modification Factors AWWA D103-09	Ri, Rc =	3, 1.5				Ri, Rc =	3, 1.5			
Risk Category IV (Seismic Use Group 3)										
Importance Factors										
Seismic	IE =	1.50	(Tank systems)	1.50	(Tank systems)	IE =	1.50	(Tank systems)	1.50	(Tank systems)
Snow	IS =	1.20	(snow)	1.20	(snow)	IS =	1.20	(snow)	1.20	(snow)
Wind criteria										
Wind speed:	3-sec Gust:	120	Miles/Hour	120	Miles/Hour	3-sec Gust:	193	KM/Hour	193	KM/Hour
	Exposure:	C		C		Exposure:	C		C	
Design Loads on Mat Foundations										
A. Dead Loads										
Weight of Roof:		60,140	lbs	19,547	lbs		267	kN	87	kN
Weight of Empty Cylinder above Mat Fdn:		299,968	lbs	70,470	lbs		1,334	kN	313	kN
B. Roof Snow Loads:		107,892	lbs	21,318	lbs		480	kN	95	kN
C. Roof Live Loads:		89,910	lbs	17,763	lbs		400	kN	79	kN
D. Fluid Loads:										
Weight of stored contents		14,692,145	lbs	3,017,136	lbs		65,354	kN	13,420	kN
E. Wind Loads (unfactored strength level loads based on ASCE 7-16):										
Wind shear at top of Mat Fdn:		55,168	lbs	24,185	lbs		245	kN	108	kN
Wind moment at top of Mat Fdn:		1,462,791	ft lbs	638,970	ft lbs		1,983	kN-M	866	kN-M
F. Seismic Loads (unfactored strength level loads based on ASCE 7-16):										
Seismic shear at top of Mat Fdn:		639,913	lbs	177,355	lbs		2,847	kN	789	kN
Seismic Moment at top of Mat Fdn:		21,269,775	ft lbs	3,459,166	ft lbs		16,500	kN-M	4,690	kN-M

STEEL - SPECIAL INSPECTIONS

SYSTEM OR MATERIAL	CBC CODE REFERENCE	CODE OR STANDARD REFERENCE	FREQUENCY / INSPECTION		REMARKS
			"CONTINUOUS/ PERFORM"	"PERIODIC/ OBSERVE"	
STEEL FABRICATION					
MATERIAL VERIFICATION OF STRUCTURAL STEEL COMPONENTS	"1507.4 2205.1 TABLE 1705.2 "	"ASTM A6 ASTM STANDARDS SPECIFIED IN CONSTRUCTION DOCUMENTS AISC 360 A3.1 AISC 360 N3.2"		X	CERTIFIED MILL TEST REPORTS
MATERIAL VERIFICATION OF HIGH STRENGTH BOLTS, NUTS, AND WASHERS	"1705.2.1.2 AISC 360 N5 TABLE 1705.2-2"	"AISC 360 A3.3 AISC 360 N3.2 ASTM STANDARDS SPECIFIED IN CONSTRUCTION DOCUMENTS RCSC 2.1"		X	MANUFACTURER'S CERTIFIED TEST REPORTS
CONCRETE					
POST INSTALLED MECHANICAL ANCHORS AND ADHESIVE ANCHORS IN HARDENED CONCRETE				X	

THE SCOPE OF THIS ENGINEERING STAMP IS FOR THE DESIGN OF THE FOLLOWING ITEMS:
TANK WALLS & RELATED CONNECTIONS,
ROOF FRAMING & RELATED CONNECTIONS, AND
FOUNDATION ANCHORAGE.

Drawing index:

S0.01	STRUCTURAL NOTES
1.0	BIOMASS TANK
2.0	DIGESTER TANK
01.1	CONNECTION TOP STIFFENER - DIGESTER
01.2	CONNECTION TOP STIFFENER - BIOMASS
02.1	CROWN RING - DIGESTER
02.2	CROWN RING - BIOMASS
03.1	ROOF BEAMS - DIGESTER
03.2	ROOF BEAMS - BIOMASS
04	MANWAY - TYPICAL
05	WIND STIFFENER - TYPICAL
06.1	ROOF LAYOUT - DIGESTER
06.2	ROOF LAYOUT - BIOMASS
07.1	FOUNDATION ANGLE - DIGESTER
07.2	FOUNDATION ANGLE - BIOMASS

KEVIN M. McCORMICK
081.007526
LICENSED STRUCTURAL ENGINEER
STATE OF ILLINOIS
Signed 4-30-2021
Exp 11-30-2021

COPYRIGHT 2021
Miller Consulting Engineers, Inc.

MILLER
CONSULTING
ENGINEERS
9600 SW Oak Street
Suite 400
Portland, OR 97219
Phone 503.246.1250
Fax 503.246.1395
www.miller-se.com

DIGESTER AND BIOMASS TANKS

SCHUMANN TANKS

650 W. 83RD STREET
CHICAGO, IL

DRAWN BY:	BCH
CHECKED BY:	PRA
PROJECT NO:	210059
ISSUE DATE:	04.19.21

REV.	DATE	DESCRIPTION

SHEET CONTENT
STRUCTURAL NOTES

SHEET
S0.01

Bobcat opening panel #12 Ring 11. or 11. and 12.

it is possible to remove 1.
if this opening is not big enough you can remove 2. additionally

Detail M: 2:1
N5 Temperature Sensor 1. 1"NPT/DN25
N6 Temperature Sensor 2. 1"NPT/DN25
N7 Water Inlet 1"NPT/DN25
N23 Glycol Supply Relief 1"NPT/DN25
N24 Glycol Return Relief 1"NPT/DN25

Detail M: 2:1

THE SCOPE OF THIS ENGINEERING STAMP IS FOR THE DESIGN OF THE FOLLOWING ITEMS:
TANK WALLS & RELATED CONNECTIONS,
ROOF FRAMING & RELATED CONNECTIONS, AND
FOUNDATION ANCHORAGE.

KEVIN M. McCORMICK 081.007526 LICENSED STRUCTURAL ENGINEER STATE OF ILLINOIS

Signed 4-30-2021
Exp. 11-30-2021

MILLER CONSULTING ENGINEERS

Detail
N14 Tank to Tank Gas 6"/DN150
N15 Spare 6"/DN150
N16 Roof Hydrant 6"/DN150
N17 Viewing Port 12"/DN300

Detail
N18 Pressure Sensor 1"/DN25
N19 Spare 1"/DN25
N20 Radar Level Sensor 6"/DN150
N21 Pressure Relief Valve 24"/DN600

Detail
N22 Tank to Tank Gas 6"/DN150

Detail M: 2:1
N1 Spare 10"/DN250
N2 Pump Pressure 10"/DN250
N3 Pump Suction 10"/DN250

Detail M: 2:1
N4 Pressure Sensor 1"/DN25

Detail M: 2:1
N11 Drainage 6"/DN150

Detail M: 2:1
N12 Overflow 6"/DN150

M: 2:1
Detail
N8 Glycol Supply 4"/DN100
N9 Glycol Return 4"/DN100

	Pos.	Number	Description	Size		Type	Height		Orientation	Inside Flange Length		Outside Flange Length		Comments
Tank Sidewall Ports	N1	1	Spare	10"	DN250	B	3'-5"	1041 mm	157,5°	6"	150 mm	10"	254 mm	
	N2	1	Pump Pressure	10"	DN250	B	3'-5"	1041 mm	180°	6"	150 mm	10"	254 mm	
	N3	1	Pump Suction	10"	DN250	B	3'-5"	1041 mm	188°	6"	150 mm	10"	254 mm	
	N4	1	Pressure Sensor	1"	DN25	A	2'-4"	711 mm	197°	-	-	7"	180 mm	
	N5	1	Temperature Sensor 1	1"NPT	DN25	A	7'-7"	2311 mm	197°	-	-	Std	Std	
	N6	1	Temperature Sensor 2	1"NPT	DN25	A	26'-11"	8204 mm	197°	-	-	Std	Std	
	N7	1	Water Inlet	1"NPT	DN25	A	51'-1"	15570 mm	72°	-	-	Std	Std	
	N8	1	Glycol Supply	4"	DN100	B	3'-5"	1041 mm	208°	6"	150 mm	10"	250 mm	
	N9	1	Glycol Return	4"	DN100	B	3'-5"	1041 mm	212°	6"	150 mm	10"	250 mm	
	N10	1	Manway	32"	DN800	A	2'-9"	750 mm	330°	-	-	Std	Std	Middle Plate 2
	N11	1	Drainage	6"	DN150	B	1'-4 1/2"	419 mm	322°	6"	150 mm	10"	250 mm	
	N12	1	Overflow	6"	DN150	B	52'-0 7/8"	15872,5 mm	118°	6"	150 mm	10"	250 mm	
	N23	1	Glycol Supply Relief	1"NPT	DN25	A	22'-0"	6705,6 mm	208°	-	-	Std	Std	
	N24	1	Glycol Return Relief	1"NPT	DN25	A	22'-0"	6705,6 mm	212°	-	-	Std	Std	

	Pos.	Number	Description	Size		Type	Radius		Orientation	Outside Flange Length		Comments
Tank Roof Ports	N13	2	Roof Catwalk	1000x3200		-	-	-	?°	-	-	
	N14	1	Tank to Tank Gas	6"	DN150	A	8'-5 1/8"	2570 mm	73°	10"	250 mm	
	N15	1	Spare	6"	DN150	A	10'-2"	3099 mm	73°	10"	250 mm	
	N16	1	Roof Hydrant	6"	DN150	A	11'-5 1/2"	3492,5 mm	73°	10"	250 mm	
	N17	1	Viewing Port	12"	DN300	A	14'-1 1/4"	4298 mm	73°	6"	150 mm	
	N18	1	Pressure Sensor	1"	DN25	A	6'-3"	1905 mm	105°	6"	150 mm	
	N19	1	Spare	1"	DN25	A	8'-2 3/8"	2500 mm	105°	6"	150 mm	
	N20	1	Radar Level Sensor	6"	DN150	A	10'-2"	3099 mm	105°	10"	250 mm	
	N21	1	Pressure Relief Valve	24"	DN600	A	14'-7 3/8"	4455 mm	105°	10"	250 mm	
	N22	1	Tank to Tank Gas PHII	6"	DN150	A	8'-5 1/8"	2570 mm	210°	10"	250 mm	
	N23	1	Mixer flange	24"	DN600	-	-	-	CTR			

Biasing forces torques	DIN EN 1993-1-8 2010-12/Tab.NA.A.2	Surface condition: hot-dip galvanized (made) + lubricated * *) Mother with molybdenum disulfide lubricant or equivalent										⊳ Remark
	⊳ Screws			M12	M16	M20	M22	M24	M27	M30	M36	For DIN EN 14399-4 / -6 / -8 the K-class K1 a uniform tightening torque in accordance with the torque tightening method applies regardless of the upper surface condition.
	⊳ Biasing force	Fp,c*	kN	50	100	160	190	220	290	350	510	
	Angular momentum method	Fvdi	kN	60	110	175	210	240	320	390	560	
	Modified toque method	Ma	Nm	100	250	450	650	800	1250	1650	2800	

Corrosion protection	~~coating material~~	~~⊳ SikaCor 299~~	
	~~specification of set value~~	~~⊳ thickness=500µm~~	
	~~allowable deviations~~	~~⊳ according to DIN EN ISO 12944~~	
	~~ISO 8501-3~~	~~⊳ Surfaces preparation before application of coating materials~~	P1 ~~P2~~ ~~P3~~
	~~Connecting means~~	~~⊳ Hot-dip galvanized / exceptions see BOMs~~	
	~~Components~~	~~⊳ Hot-dip galvanized / exceptions see BOMs~~	
		~~⊳ coating-thicknesses according to DIN EN ISO 14713 and DIN EN ISO 1461~~	
	~~ISO 8501-3~~	~~⊳ Surfaces preparation before application of coating materials~~	P1 ~~P2~~ ~~P3~~
General comments	Execution according to DIN EN 1090-2	⊳ EXC1	Permission granted: Structural engineer ☒ Client ☒ PM-internal ☒
	Execution class ⊳DIN EN1090-2	⊳ general EXC1 ~~EXC2~~ ~~EXC3~~	Copies in circulation 1 ☒ 2 3 4 5 6 7 8
Material testimonies	DIN EN 10204	Certificates for metallic products Acceptance test certificates	2.2 / 3.1 / Not attested
	Material quality	Description of the components	
	⊳According to requirement	⊳ Tank wall / roof (see BOM // static)	☒
	⊳S235JR	⊳ Main beam (see BOM)	☒
	⊳S235JR	⊳ Staircases and secondary beam (see BOM)	☒
	⊳S235JR	⊳ All components (see BOM)	☒
Production technical regulations	DIN EN 1090-2	Tolerances — Basic tolerances	Tolerances class 1 ~~2~~
	DIN EN ISO 13920	General tolerances welded constructions	~~A~~ ~~B~~ C ~~D~~ ~~E~~ ~~F~~ ~~G~~ ~~H~~
	DIN EN ISO 5817	Welding - quality levels, irregularities, (supporting construct)	~~B~~ ~~C~~ D
	~~Regulations and procedures~~	~~DIN EN ISO 4063:135 MAG~~ / ~~DIN EN ISO 4063:131 MIG~~ / ~~DIN EN ISO 4063:131 MIG~~	
	~~base material~~	~~S 235 JR~~ / ~~1.4301 (AISI 304/304L)~~ / ~~1.4583 (AISI 316L)~~	
	~~filler material~~	~~DIN EN ISO 14341 G3Si1~~ / ~~DIN EN ISO 14343 A 4316~~ / ~~DIN EN ISO 14343 A 4430~~	
	~~Material:~~	...	Welding testing: ~~EWS/IWS~~
	~~Procedures:~~	~~Lasercut~~	~~Date:~~
	~~Rolling: Y☐ N☒~~	~~Rolling Diameter see designation~~	~~Name:~~

Static changes reserved.
Plate thickness according to static!

1° = U/360°
1° = 89,45 mm

Diese Zeichnung ist unser Eigentum.
Unbefugte Benutzung ist verboten
und wird gerichtlich verfolgt.

This drawing remains our property.
Its use without due authority is forbidden
and will lead to legal action.

Bezeichnung / designation:
1.0 Biomass Tank
D= 10,25 m H= 16,11 m

Maßstab / Scala: 1:100 / Architectural D — CE 2451

Projekt / Project: Chicago

Kunde / customer: Green Arrow

Zust	Änderung/Change	Datum	Name		Datum /Date	Name
V. 09	Changed size to Arch D	27.04.21	LR			
V. 08	Added N23 mixer flange	13.04.21	LR	worked on	26.01.2021	Hom
V. 07	Removed Cladding Detail	16.03.21	LR	examined		
V. 06	Relabeled N1/N2/N3	16.03.21	LR	standard		
V. 05	P1/N23/N24	15.03.21	TP			
V. 04	N11/N12/pipe sup./N5/N6/N7	11.03.21	TP			
V. 03	CR/flanges rotated	05.03.21	TP			
V. 02	Revisions 2-26-2021	03.03.21	TP			

Schumann Tanks USA
Schumann Tanks USA Corp.
777 Brickell Avenue, Suite 500
Miami, FL 33131 USA

Zeichnungs-Nr. / design number: 2021/006-1.0/01 V.09

THE SCOPE OF THIS ENGINEERING STAMP IS FOR THE DESIGN OF THE FOLLOWING ITEMS:
TANK WALLS & RELATED CONNECTIONS,
ROOF FRAMING & RELATED CONNECTIONS, AND
FOUNDATION ANCHORAGE.

MILLER CONSULTING ENGINEERS

KEVIN M. McCORMICK 081.007526 LICENSED STRUCTURAL ENGINEER STATE OF ILLINOIS
Signed 4-30-2021
Exp. 11-30-2022

Biasing forces torques	DIN EN 1993-1-8 2010-12/Tab.NA.A.2	Surface condition: hot-dip galvanized (made) + lubricated * *) Mother with molybdenum disulfide lubricant or equivalent										▷ Remark
	▷ Screws			M12	M16	M20	M22	M24	M27	M30	M36	For DIN EN 14399-4 / -6 / -8 the K-class K1 a uniform tightening torque in accordance with the torque tightening method applies regardless of the upper surface condition.
	▷ Biasing force	Fp,c*	kN	50	100	160	190	220	290	350	510	
	Angular momentum method	Fvdi	kN	60	110	175	210	240	320	390	560	
	Modified toque method	Ma	Nm	100	250	450	650	800	1250	1650	2800	

Corrosion protection	coating material	▷ SikaCor 299	
	specification of set value	▷ thickness=500µm	
	allowable deviations	▷ according to DIN EN ISO 12944	
	ISO 8501-3	▷ Surfaces preparation before application of coating materials	P1 P2 P3
	Connecting means	▷ Hot-dip galvanized / exceptions see BOMs	
	Components	▷ Hot-dip galvanized / exceptions see BOMs	
		▷ coating-thicknesses according to DIN EN ISO 14713 and DIN EN ISO 1461	
	ISO 8501-3	▷ Surfaces preparation before application of coating materials	P1 P2 P3
General comments	Execution according to DIN EN 1090-2	▷ EXC1	Permission granted: Structural engineer ☒; Client ☒; PM-internal ☒
	Execution class ▷DIN EN1090-2	▷ general EXC1 EXC2 EXC3	Copies in circulation 1 2 3 4 5 6 7 8 (1 ☒)
Material testimonies	DIN EN 10204	Certificates for metallic products Acceptance test certificates	2.2 / 3.1 / Not attested
	Material quality	Description of the components	
	▷According to requirement	▷ Tank wall / roof (see BOM // static)	Not attested ☒
	▷S235JR	▷ Main beam (see BOM)	Not attested ☒
	▷S235JR	▷ Staircases and secondary beam (see BOM)	Not attested ☒
	▷S235JR	▷ All components (see BOM)	Not attested ☒
Production technical regulations	DIN EN 1090-2	Tolerances — Basic tolerances	Tolerances class 1 2
	DIN EN ISO 13920	General tolerances welded constructions	A B C D E F G H
	DIN EN ISO 5817	Welding - quality levels, irregularities, (supporting construct)	B C D
	Regulations and procedures	DIN EN ISO 4063:135 MAG	DIN EN ISO 4063:131 MIG — DIN EN ISO 4063:131 MIG
	base material	S 235 JR	1.4301 (AISI 304/304L) — 1.4583 (AISI 316L)
	filler material	DIN EN ISO 14341 G3Si1	DIN EN ISO 14343 A 4316 — DIN EN ISO 14343 A 4430
	Material:	...	Welding testing: EWS/IWS
	Procedures:	Lasercut	Date:
	Rolling: Y☐ N☒	Rolling Diameter see designation	Name:

Tank Sidewall Ports

Pos.	Number	Description	Size		Type	Height		Orientation	Inside Flange Length		Outside Flange Length		Comments
N1	1	Drainage	6"	DN150	B	1'-4 1/2"	419 mm	342,7°	6"	150 mm	10"	250 mm	
N2	1	Manway	32"	DN800	A	2'-9"	750 mm	353,3°	-	-	Std	Std	Middle Plate 2
N3	1	Spare	10"	DN250	B	3'-5"	1041 mm	95,3°	6"	150 mm	10"	254 mm	
N4	1	Pump Pressure	10"	DN250	B	3'-5"	1041 mm	82°	6"	150 mm	10"	254 mm	
N5	1	Pump Suction	10"	DN250	B	3'-5"	1041 mm	85°	6"	150 mm	10"	254 mm	
N6	1	Level Pressure Sensor	1"	DN25	A	2'-4"	711 mm	89°	-	-	7"	180 mm	
N7	1	Temperature Sensor 1	1"NPT	DN25	A	7'-7"	2311 mm	89°	-	-	Std	Std	
N8	1	Temperature Sensor 2	1"NPT	DN25	A	26'-11"	8204 mm	89°	-	-	Std	Std	
N9	1	Water Inlet	1"NPT	DN25	A	51'-1"	15570 mm	100°	-	-	Std	Std	
N10	1	Glycol Supply	4"	DN100	B	3'-5"	1041 mm	99,3°	6"	150 mm	10"	250 mm	
N11	1	Glycol Return	4"	DN100	B	3'-5"	1041 mm	100,8°	6"	150 mm	10"	250 mm	
N12	1	Overflow	6"	DN150	B	52'-3 1/2"	15900,5 mm	230°	6"	150 mm	10"	250 mm	
N25	1	Glycol Supply Manifold Relief	1"NPT	DN25	A	22'-0"	6705,6 mm	99,3°	-	-	Std	Std	
N26	1	Glycol Return Manifold Relief	1"NPT	DN25	A	22'-0"	6705,6 mm	100,8°	-	-	Std	Std	

Tank Roof Ports

Pos.	Number	Description	Size		Type	Radius		Orientation	Outside Flange Length		Comments
N13	1	Mixer flange	24"	DN600	-	-	-	CTR	-	-	
N14	1	Gas Outlet 1	10"	DN250	A	7'-5 5/8"	2275 mm	146,3°	10"	250 mm	
N15	1	Spare	6"	DN150	A	21'-6"	6553 mm	80°	10"	250 mm	
N16	1	Tank to Tank Gas PHII	6"	DN150	A	22'-7 1/8"	6886 mm	80°	10"	250 mm	
N17	1	Radar Level Sensor	6"	DN150	A	27'-7"	8406 mm	80°	10"	250 mm	
N18	1	Pressure Relief Valve	24"	DN600	A	32'-2 3/4"	9825 mm	253,3°	10"	250 mm	
N19	1	Roof Hydrant	6"	DN150	A	7'-0"	2134 mm	0°	10"	250 mm	
N20	1	Viewing Port	12"	DN300	A	5'-7 5/8"	1719 mm	0°	6"	150 mm	
N21	1	Gas Pressure 1	1"	DN25	A	7'-0"	2134 mm	22,5°	6"	150 mm	
N22	1	Gas Pressure 2	1"	DN25	A	7'-0"	2134 mm	33°	6"	150 mm	
N23	1	Tank to Tank Gas	6"	DN150	A	22'-6 1/4"	6865 mm	266,6°	10"	250 mm	
N24	1	Gas Outlet 2	6"	DN150	A	7'-0"	2134 mm	122,3°	10"	250 mm	

Static changes reserved.
Plate thickness according to static!

1° = U/360°
1° = 201,23 mm

Diese Zeichnung ist unser Eigentum.
Unbefugte Benutzung ist verboten
und wird gerichtlich verfolgt.

This drawing remains our property.
Its use without due authority is forbidden
and will lead to legal action.

Bezeichnung / designation:
2.0 Anaerobic Digester
D= 23,06 m H= 16,17 m

Maßstab / Scala: 1:125 / Architectural D — CE 2451

Projekt / Project: Chicago

Kunde / customer: Green Arrow

Zust	Änderung/Change	Datum	Name
V. 07	Changed size to Arch D	27.04.21	LR
V. 06	Removed Cladding Detail	16.03.21	LR
V. 05	Relabeled N3/N4/N5	16.03.21	LR
V. 04	P2/N25/N26/N9/N1/N2	15.03.21	TP
V. 03	P2/N12/N7/N8/N9	11.03.21	TP
	Staircase	09.03.21	Hom
V. 02	Revisions 2-26-2021	05.03.21	TP
		15.02.21	TP

	Datum /Date	Name
worked on		
examined		
standard		

Schumann Tanks USA
Schumann Tanks USA Corp.
777 Brickell Avenue, Suite 500
Miami, FL 33131 USA

Zeichnungs-Nr. / design number: 2021/006-1.0/01 — V.07

Pos. 2 / Top stiffener
D=23.06 m

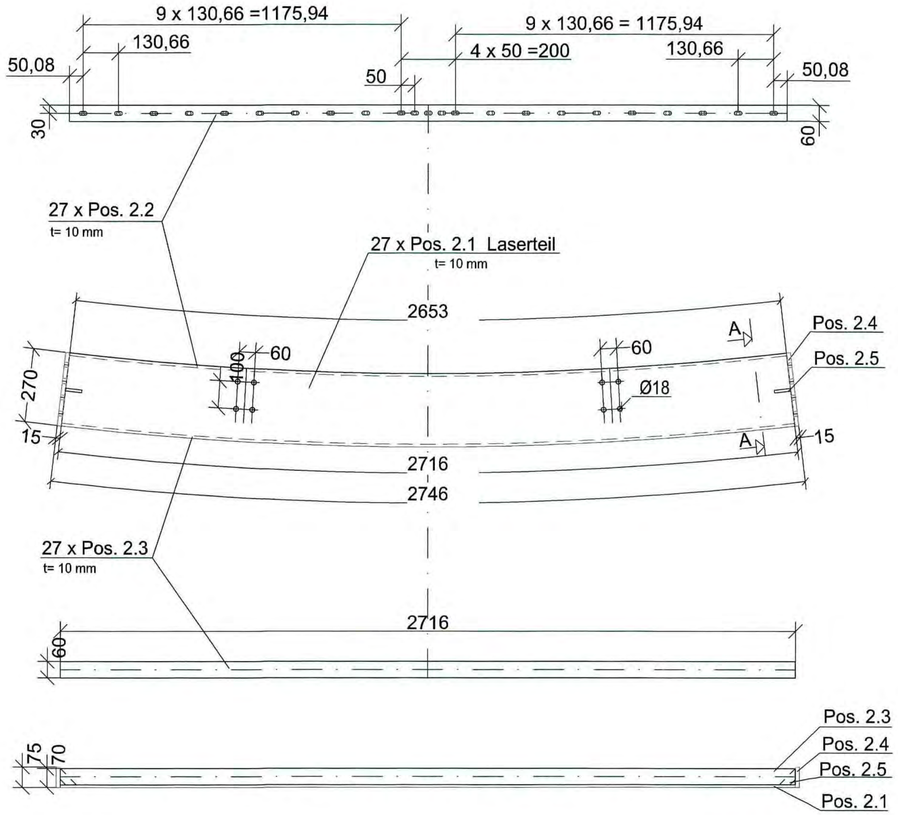

Connection top stiffener

M. 2:1

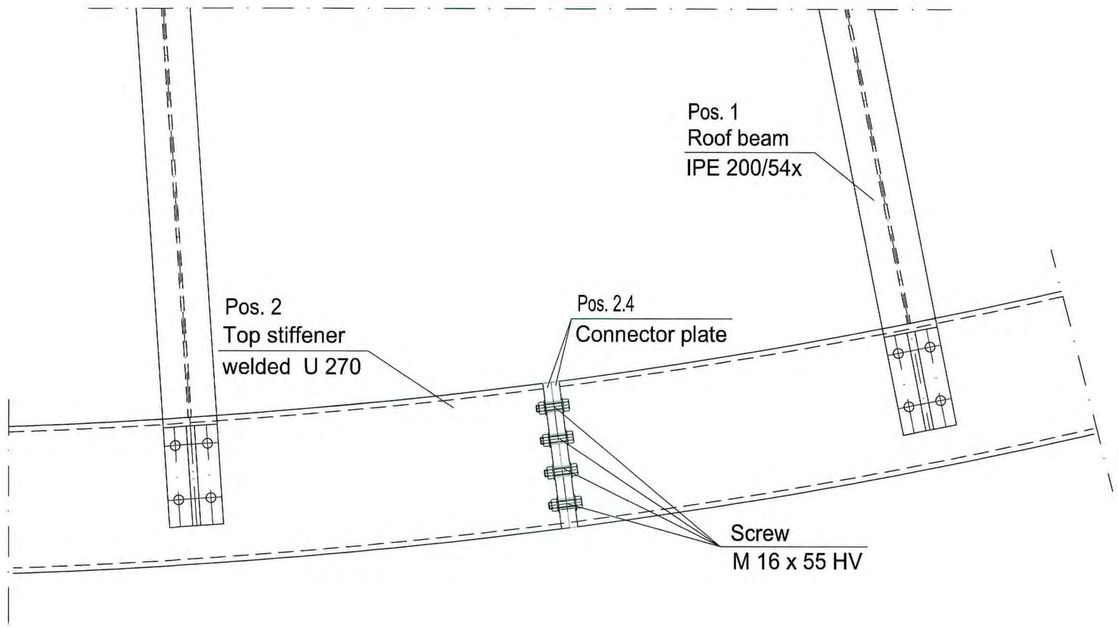

Schnitt A-A

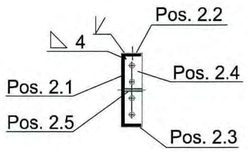

54 x Pos. 2.5
t= 10 mm

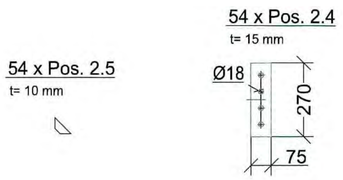

THE SCOPE OF THIS ENGINEERING STAMP IS FOR THE DESIGN OF THE FOLLOWING ITEMS:
TANK WALLS & RELATED CONNECTIONS,
ROOF FRAMING & RELATED CONNECTIONS, AND
FOUNDATION ANCHORAGE.

KEVIN M. McCORMICK
081.007526
LICENSED STRUCTURAL ENGINEER
STATE OF ILLINOIS
Signed 4-30-2021
Exp. 11-30-2022

MILLER CONSULTING ENGINEERS

Diese Zeichnung ist unser Eigentum.
Unbefugte Benutzung ist verboten
und wird gerichtlich verfolgt.

This drawing remains our property.
Its use without due authority is forbidden
and will lead to legal action.

Bezeichnung / designation:	Connection Top Stiffener - Roof Beam D=23.06m
Maßstab / Scale:	1:10 / Architectural D
Projekt / Project:	Chicago
Kunde / customer:	Green Arrow
Drawing Index:	01.1
Zeichnungs-Nr. / design number:	2021/006-1.0 - 01
	V.01

	Datum /Date	Name
worked on	03.30.2021	LR
examined		
standard		

Schumann Tanks USA
Schumann Tanks USA Corp
777 Brickell Avenue, Suite 500
Miami, FL 33131-USA

Zust.	Änderung/Change	Datum	Name

Pos. 2 / Top stiffener
D=10.25 m

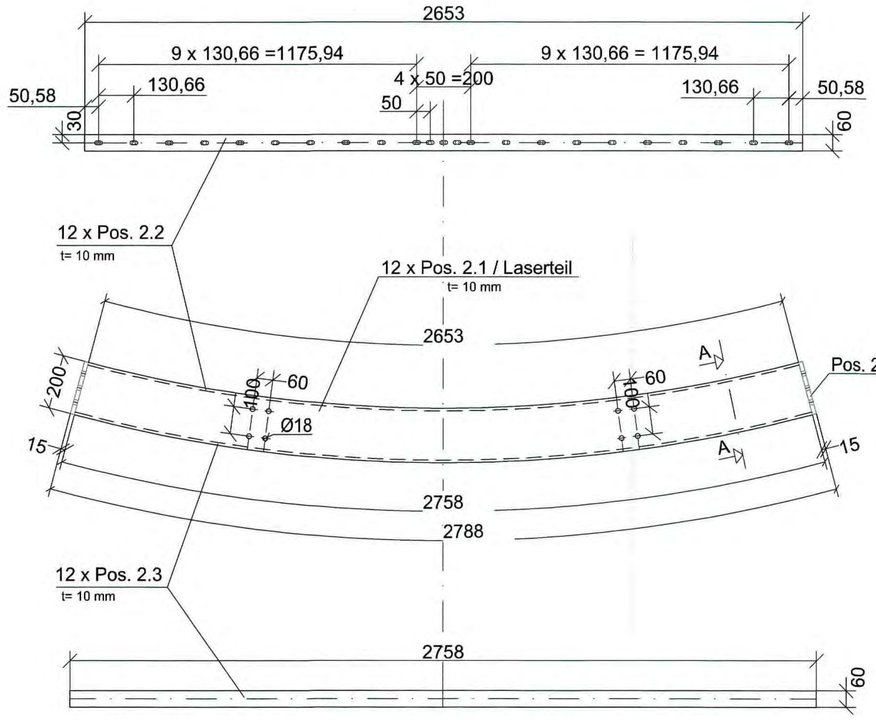

Connection top stiffener

M. 2:1

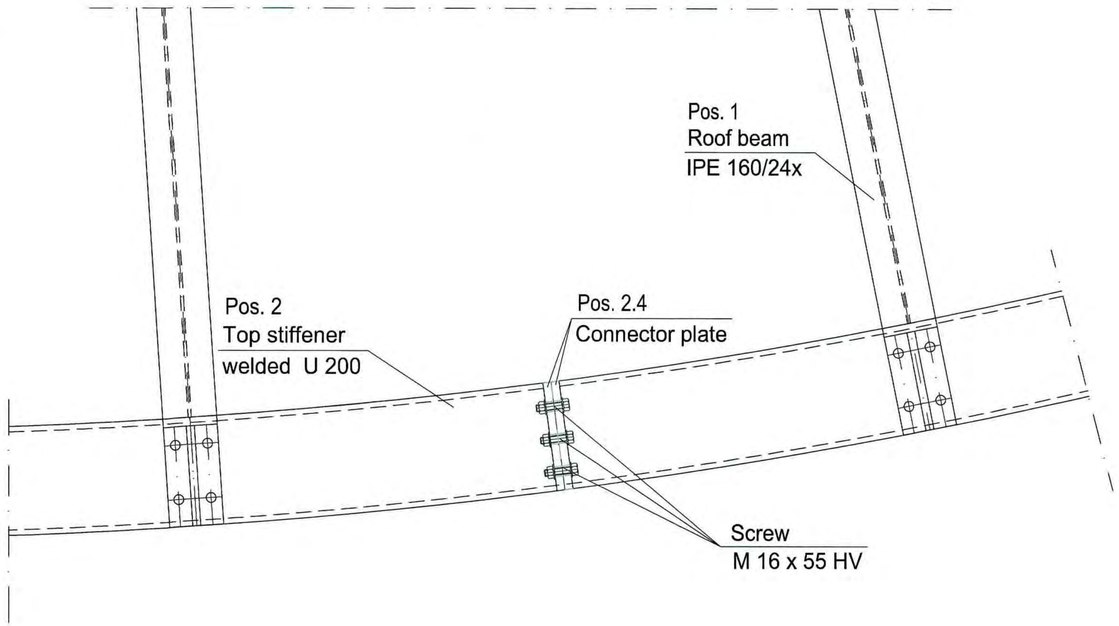

Schnitt A-A

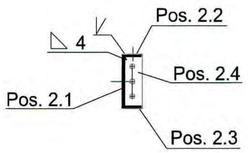

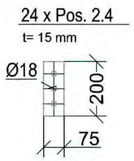

THE SCOPE OF THIS ENGINEERING STAMP IS FOR THE DESIGN OF THE FOLLOWING ITEMS:
TANK WALLS & RELATED CONNECTIONS,
ROOF FRAMING & RELATED CONNECTIONS, AND
FOUNDATION ANCHORAGE.

KEVIN M. McCORMICK
081.007574
LICENSED
STRUCTURAL
ENGINEER
STATE OF ILLINOIS
Signed 4-30-2021
End 11-30-2021

MILLER CONSULTING ENGINEERS

V seams 4mm
fillet welds 4mm
quality levels C
V seams are flat level
General tolerance for welded construction to
DIN ISO 13920: tolerances class C
welding processes to DIN ISO 4063: 135
Filler metal: G3Si1 EN ISO
Base metal: S235 JR

Diese Zeichnung ist unser Eigentum.
Unbefugte Benutzung ist verboten
und wird gerichtlich verfolgt.

This drawing remains our property.
Its use without due authority is forbidden
and will lead to legal action.

Bezeichnung / designation:
Connection Top Stiffener - Roof Beam
D=10.25m

Maßstab / Scala: 1:10 / Architectural D

Projekt / Project: Chicago

	Datum /Date	Name
worked on	03.30.2021	LR
examined		
standard		

Schumann Tanks USA
Schumann Tanks USA Corp.
777 Brickell Avenue, Suite 500
Miami, FL 33131 USA

Zust.	Änderung/Change	Datum	Name

Kunde / customer: Green Arrow

Drawing Index: 01.2

Zeichnungs-Nr. / design number: 2021/006-2.0 - 01

V.01

Cut

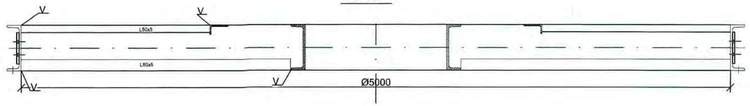

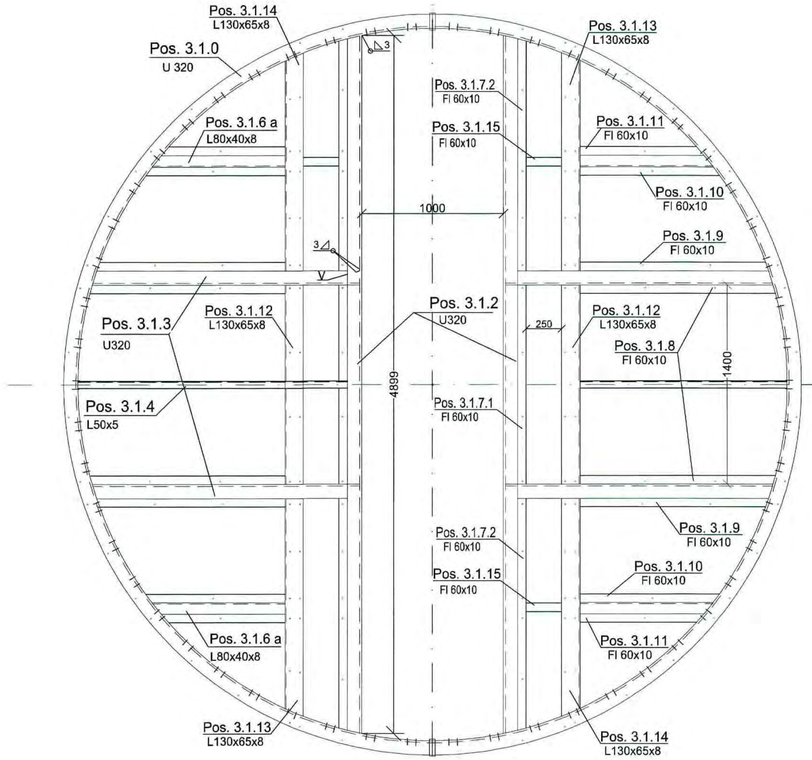

Top view

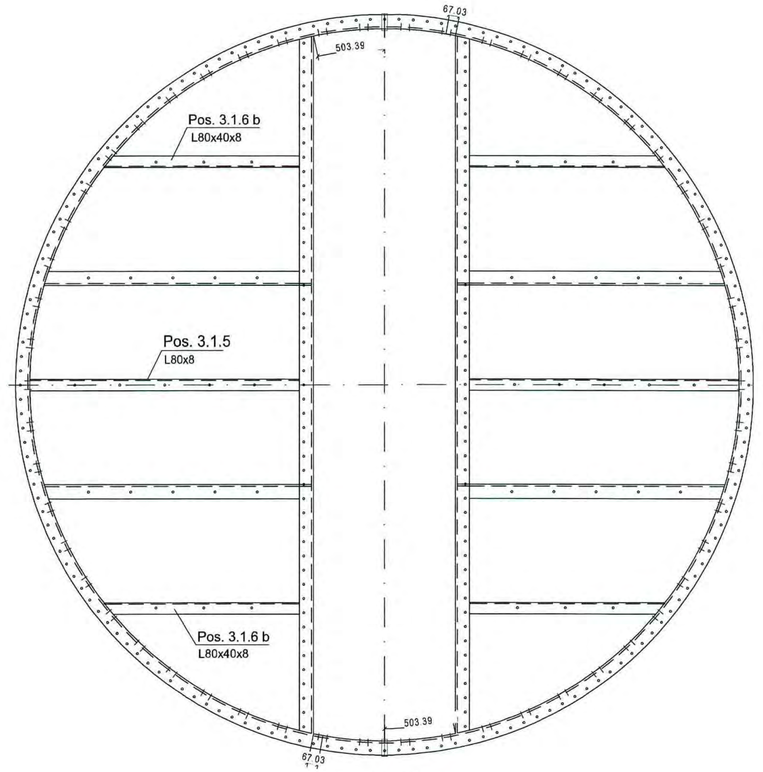

Bottom view

2 x U320 rolled

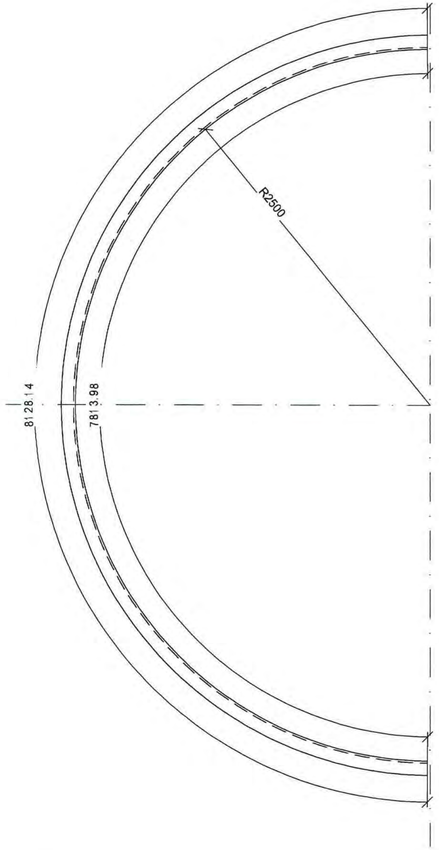

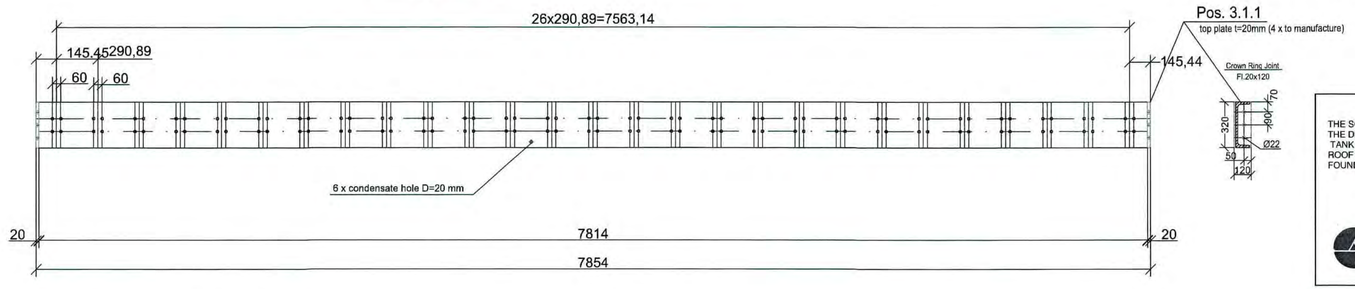

THE SCOPE OF THIS ENGINEERING STAMP IS FOR THE DESIGN OF THE FOLLOWING ITEMS:
TANK WALLS & RELATED CONNECTIONS,
ROOF FRAMING & RELATED CONNECTIONS, AND
FOUNDATION ANCHORAGE.

MILLER CONSULTING ENGINEERS

KEVIN M. McCORMICK
081.007526
LICENSED STRUCTURAL ENGINEER
STATE OF ILLINOIS
Signed 4-30-2021
Exp 11-30-2022

Stückliste:

Pos.	Stück	Bezeichnung	Länge einz.	Länge ges.	Gew. einz.	Gew. ges.	Werkst.	Güte:
			Länge / Fläche / m²					
3.1.0	2	U 320	8128 mm	16,26 m	59,5 kg/m	967,47 kg	S235JRG2	
3.1.1	4	Fl 120x20	320 mm	1,28 m	18,8 kg/m	24,06 kg	S235JRG2	
3.1.2	2	U 320	4897 mm	9,79 m	59,5 kg/m	582,51 kg	S235JRG2	
3.1.3	4	U 320	1884 mm	7,54 m	59,5 kg/m	448,63 kg	S235JRG2	
3.1.4	2	L 50x50x5	1458 mm	2,92 m	3,77 kg/m	11,01 kg	S235JRG2	
3.1.5	2	L 80x40x8	1898 mm	3,80 m	7,07 kg/m	26,87 kg	S235JRG2	
3.1.6 a	4	L 80x40x8	935 mm	3,74 m	7,07 kg/m	26,44 kg	S235JRG2	
3.1.6 b	4	L 80x40x8	1375 mm	5,50 m	7,07 kg/m	38,89 kg	S235JRG2	
3.1.7	2	Fl 60x10	4616 mm	9,23 m	4,71 kg/m	43,47 kg	S235JRG2	
3.1.8	4	Fl 60x10	1372 mm	5,49 m	4,71 kg/m	25,86 kg	S235JRG2	
3.1.9	4	Fl 60x10	1323 mm	5,29 m	4,71 kg/m	24,92 kg	S235JRG2	
3.1.10	4	Fl 60x10	980 mm	3,92 m	4,71 kg/m	18,46 kg	S235JRG2	
3.1.11	4	Fl 60x10	870 mm	3,48 m	4,71 kg/m	16,39 kg	S235JRG2	
3.1.12	2	L 130x65x8	1418 mm	2,84 m	11,90 kg/m	33,80 kg	S235JRG2	
3.1.13	2	L 130x65x8	1516 mm	3,03 m	11,90 kg/m	36,06 kg	S235JRG2	
3.1.14	2	L 130x65x8	1516 mm	3,03 m	11,90 kg/m	36,06 kg	S235JRG2	
3.1.15	4	Fl 60x10	248 mm	0,99 m	11,90 kg/m	11,80 kg	S235JRG2	
						2372,70 kg		

2 x Pos. 3.1.2
U 320

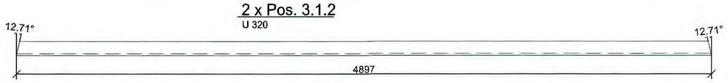

je 2x Pos.
L130x65x8

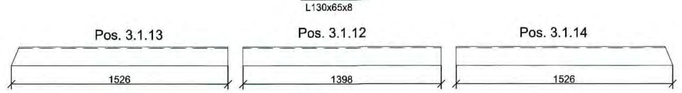

2 x Pos. 3.1.7
Fl 60x10

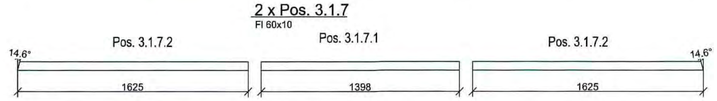

4 x Pos. 3.1.3
U 320
(2 x drawn
2 x mirror-inverted)

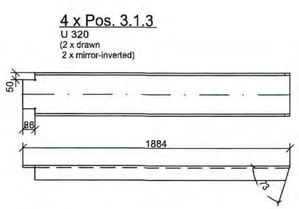

2x Pos. 3.1.4
L50x50x5

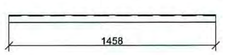

2x Pos. 3.1.5
L80x40x8

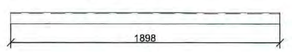

4 x Pos. 3.1.8
Fl 60x10
(2 x drawn
2 x mirror-inverted)

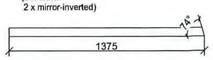

4 x Pos. 3.1.9
Fl 60x10
(2 x drawn
2 x mirror-inverted)

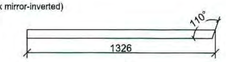

4 x Pos. 3.1.6 a
L 80x40x8

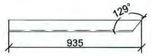

4 x Pos. 3.1.6 b
L 80x40x8
(2 x drawn
2 x mirror-inverted)

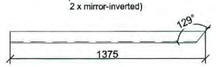

4 x Pos. 3.1.10
Fl 60x10
(2 x drawn
2 x mirror-inverted)

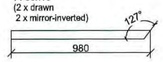

4 x Pos. 3.1.11
Fl 60x10
(2 x drawn
2 x mirror-inverted)

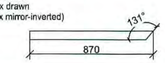

4 x Pos. 3.1.15
Fl 60x10

All parts shortened by 2 mm in length !

Diese Zeichnung ist unser Eigentum.
Unbefugte Benutzung ist verboten
und wird gerichtlich verfolgt.

This drawing remains our property.
Its use without due authority is forbidden
and will lead to legal action.

Bezeichnung / description:
Crown Ring D=5000
D=23,06 m

Maßstab / Scala: 1:20 / Architectural C

Project / Project: Chicago

Zust	Änderung/Change	Datum	Name
		Datum /Data	Name
	worked on	04.01.2021	LR
	examined		
	standard		

Schumann Tanks USA
Schumann Tanks USA Corp.
777 Brickell Avenue, Suite 500
Miami, FL 33131 USA

Kunde / customer: Green Arrow

Drawing Index: 02.1

Zeichnungs-Nr. / design number: 2021/006-1.0 - 02

V.01

Cut

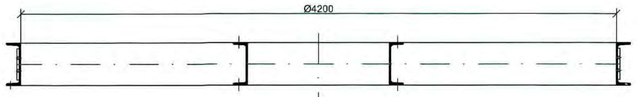

Top View

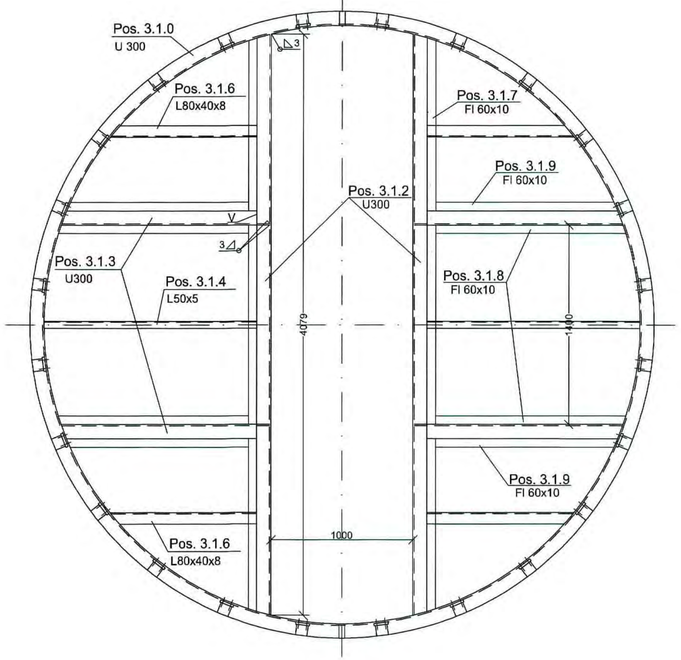

Bottom View

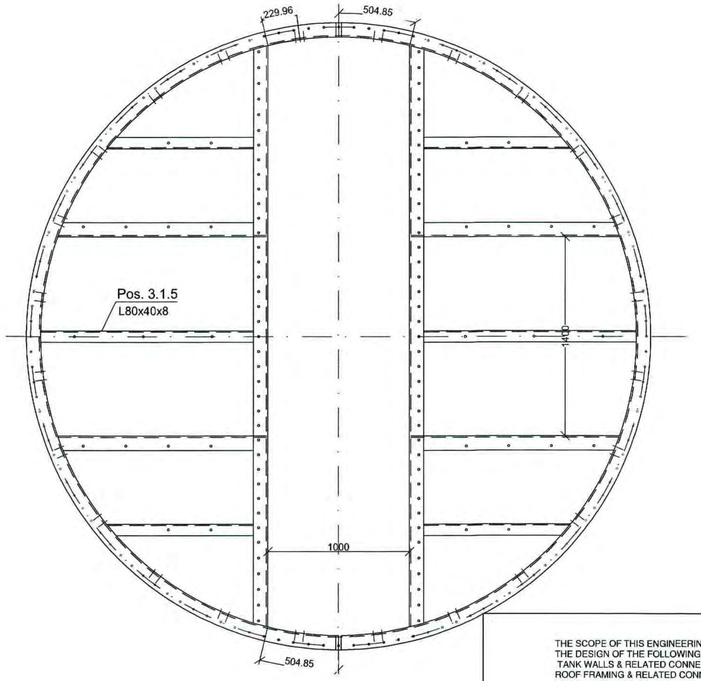

2 x U300 rolled

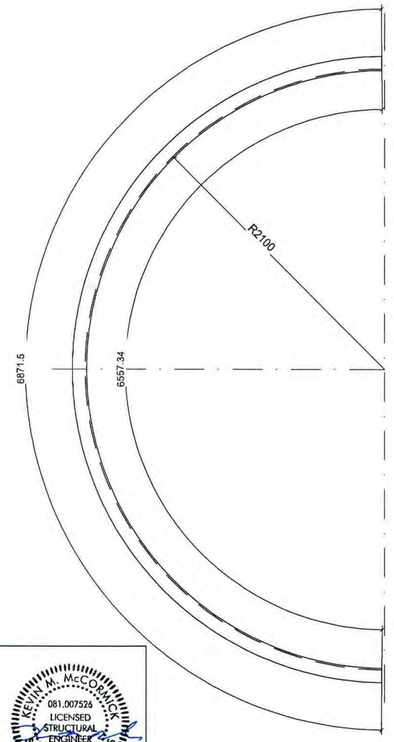

2x Pos. 3.1.0 / U300

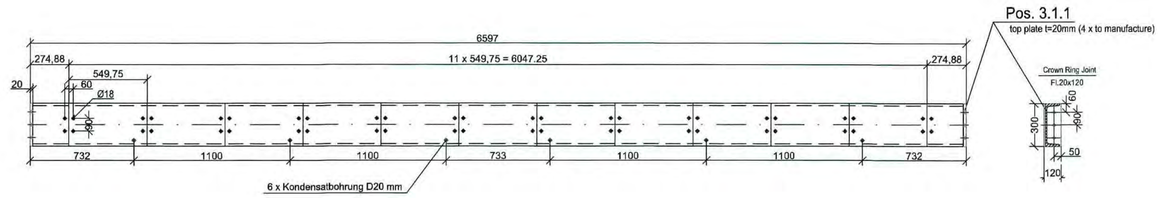

THE SCOPE OF THIS ENGINEERING STAMP IS FOR THE DESIGN OF THE FOLLOWING ITEMS:
TANK WALLS & RELATED CONNECTIONS,
ROOF FRAMING & RELATED CONNECTIONS, AND
FOUNDATION ANCHORAGE.

MILLER CONSULTING ENGINEERS

KEVIN M. McCORMICK
081.007526
LICENSED STRUCTURAL ENGINEER
STATE OF ILLINOIS
Signed 4-30-2021
Exp. 11-30-2022

Stückliste:

			Länge / Fläche / m²				Güte:	
Pos.	Stück	Bezeichnung	Länge einz.	Länge ges.	Gew. einz.	Gew. ges.	Werkst.	
3.1.0	2	U 300	6557 mm	13,12 m	46,2 kg/m	606,00 kg	S235JRG2	
3.1.1	4	Fl 120x20	300 mm	1,20 m	18,8 kg/m	22,56 kg	S235JRG2	
3.1.2	2	U 300	4077 mm	8,15 m	46,2 kg/m	376,53 kg	S235JRG2	
3.1.3	4	U 300	1468 mm	5,87m	46,2 kg/m	271,19 kg	S235JRG2	
3.1.4	2	L 50x5	1498 mm	3,00 m	3,77 kg/m	11,31 kg	S235JRG2	
3.1.5	2	L 80x8	1498 mm	3,00 m	9,63 kg/m	28,98 kg	S235JRG2	
3.1.6	8	L 80x8	1035 mm	8,28 m	9,63 kg/m	80,00 kg	S235JRG2	
3.1.7	2	Fl 60x10	3818 mm	7,64 m	4,71 kg/m	35,98 kg	S235JRG2	
3.1.8	4	Fl 60x10	1338 mm	5,35 m	4,71 kg/m	25,20 kg	S235JRG2	
3.1.9	4	Fl 60x10	1280 mm	5,12 m	4,71 kg/m	24,12 kg	S235JRG2	
						1481,87 kg		

2 x Pos. 3.1.2
U 300

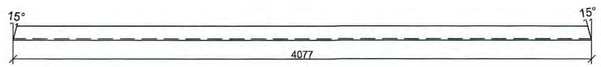

4 x Pos. 3.1.3
U 300
(2 x drawn
2 x mirror-inverted)

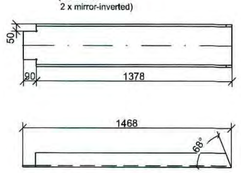

2x Pos. 3.1.4
L 50x50x5

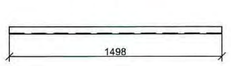

2x Pos. 3.1.5
L 80x40x8

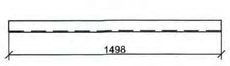

8x Pos. 3.1.6
L 80x40x8
(4 x drawn
4 x mirror-inverted)

2 x Pos. 3.1.7
Fl 60x10

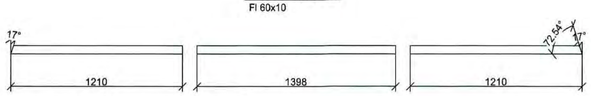

4 x Pos. 3.1.8
Fl 60x10
(2 x drawn
2 x mirror-inverted)

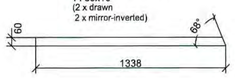

4 x Pos. 3.1.9
Fl 60x10
(2 x drawn
2 x mirror-inverted)

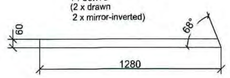

All parts shortened by 2 mm in length !

Diese Zeichnung ist unser Eigentum.
Unbefugte Benutzung ist verboten
und wird gerichtlich verfolgt.

This drawing remains our property.
its use without due authority is forbidden
and will lead to legal action.

Bezeichnung / designation:
Crown Ring D=4200
Tank D=10,25 m

Maßstab / Scala: 1:20 / Architectural C

Project / Project: Chicago

	Datum /Date	Name
worked on	04.01.2021	LR
examined		
standard		

Kunde / customer: Green Arrow

Drawing Index: 02.2

Schumann Tanks USA
Schumann Tanks USA Corp.
777 Brickell Avenue, Suite 500
Miami, FL 33131 USA

Zeichnungs-Nr. / design number: 2021/006-2.0 - 02

V.01

Zust. | Änderung/Change | Datum | Name

Pos. 2.1
54 Pieces Roof Beams IPE 200

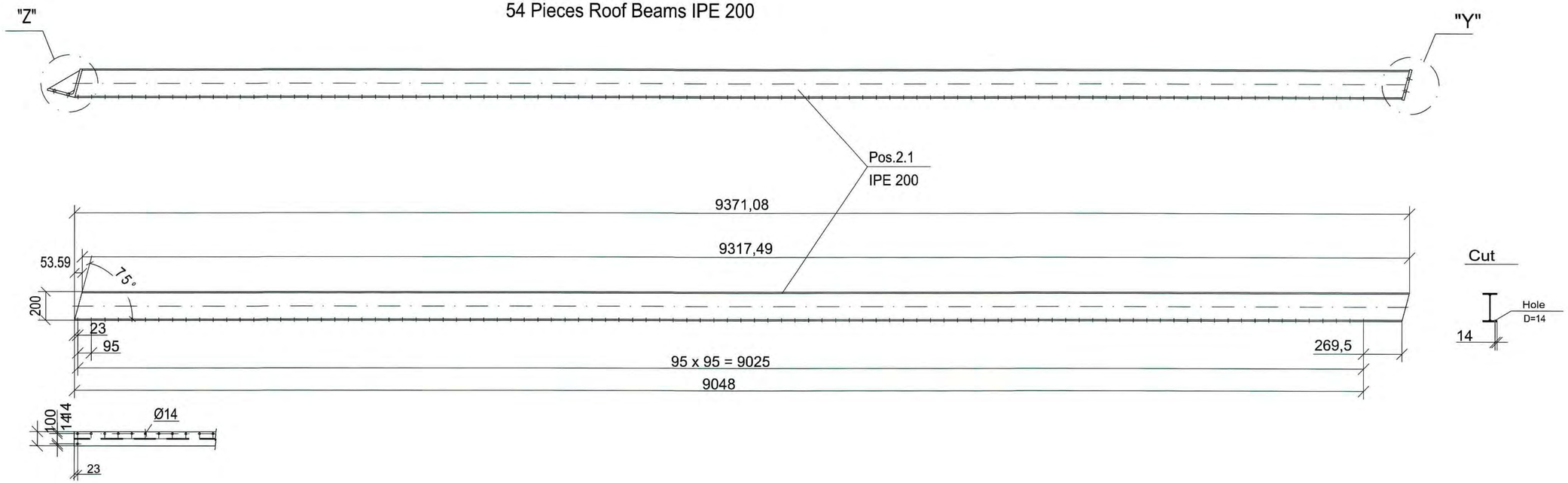

Detail Z
M 3:1

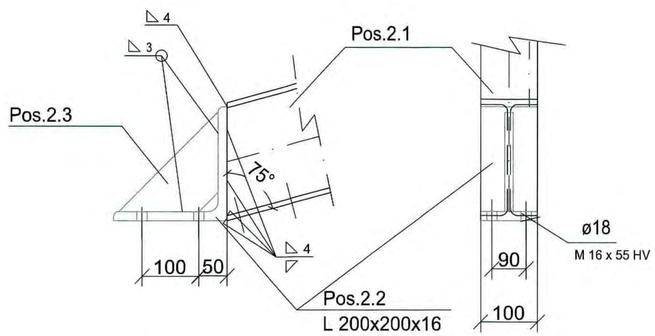

Detail Y
M 3:1

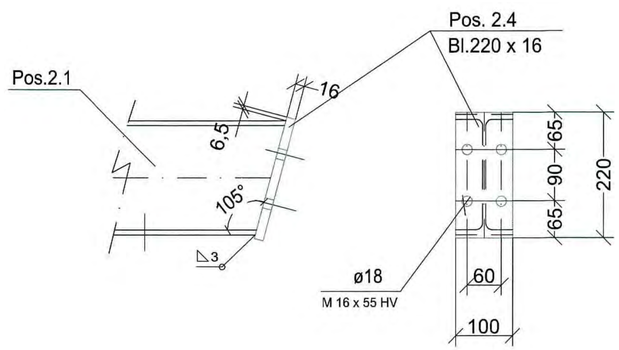

Pos.2.3
t=6
M 3:1

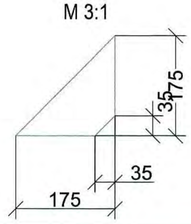

THE SCOPE OF THIS ENGINEERING STAMP IS FOR THE DESIGN OF THE FOLLOWING ITEMS:
TANK WALLS & RELATED CONNECTIONS,
ROOF FRAMING & RELATED CONNECTIONS, AND
FOUNDATION ANCHORAGE.

KEVIN M. McCORMICK
081.007526
LICENSED
STRUCTURAL
ENGINEER
STATE OF ILLINOIS
Signed 4-30-2021
Exp 11-30-2022

MILLER CONSULTING ENGINEERS

Part List:

Pos.	Pos	Description	Length single	Total Length	Weight single	Total Weight	Class	Note:
2.1	54	IPE 200	9372 mm	506,09 m	209,93 kg	11339,37 kg	St 37	
2.2	54	L 200x200x16	100 mm	5,40 m	4,85 kg	261,90 kg	St 37	
2.3	54	Bl. 180x6	180 mm	9,72 m	1,53 kg	82,43 kg	St 37	
2.4	54	Bl. 220x16	100 mm	5,40 m	2,59 kg	139,86 kg	St 37	
					218,90 kg	11820,56 kg		
	216	Bolt M16x45					10.9 hdg	HV-Connection
	216	Bolt M16x45					10.9 hdg	HV-Connection
	432	Nut M16					10.9 hdg	
	864	Washer A17					10.9 hdg	

Diese Zeichnung ist unser Eigentum.
Unbefugte Benutzung ist verboten
und wird gerichtlich verfolgt.

This drawing remains our property.
Its use without due authority is forbidden
and will lead to legal action.

Bezeichnung / designation
Roof Beams IPE 200
D=23,06 m / 15°

Maßstab / Scale : 1:15 / Architectural D

Projekt / Project:
Chicago

	Datum /Date	Name
worked on	04.01.2021	LR
examined		
standard		

Kunde / customer:
Green Arrow

Drawing Index: 03.1

Schumann Tanks USA
Schumann Tanks USA Corp.
777 Brickell Avenue, Suite 500
Miami, FL 33131 USA

Zeichnungs-Nr. / design number:
2021/006-1.0 - 03

V.02

Zust. | Änderung/Change | Datum | Name

24 Pieces Roof Beams Pos. 2

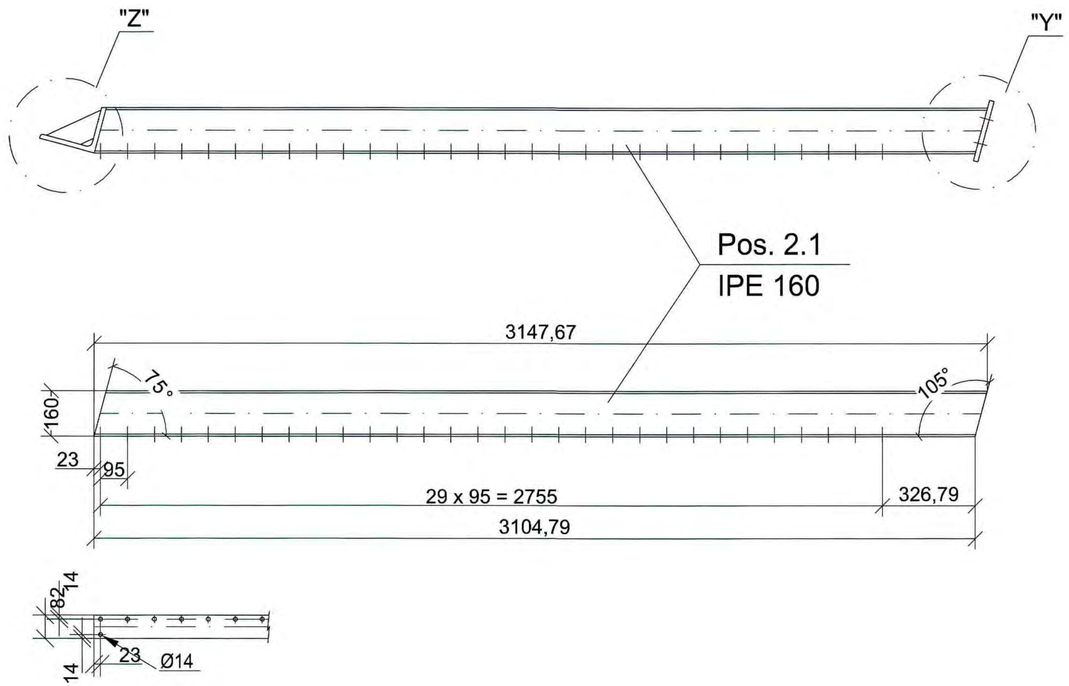

Cut

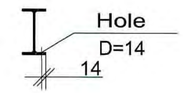

Detail Z
M 3:1

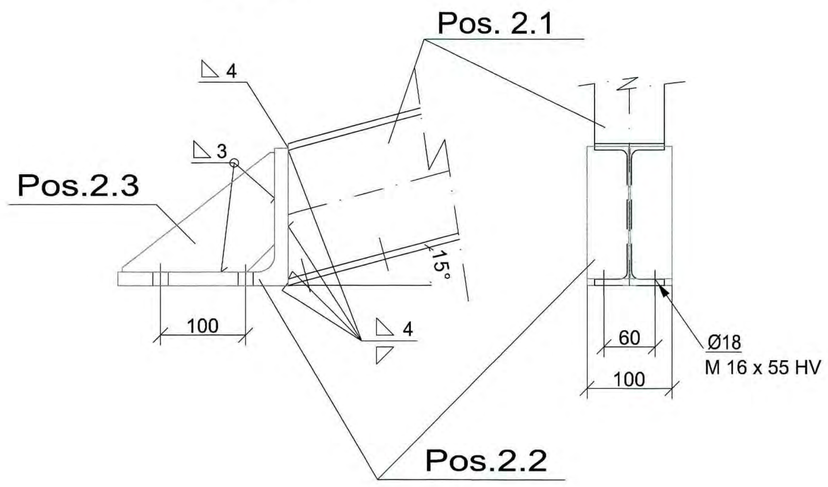

Detail Y
M 3:1

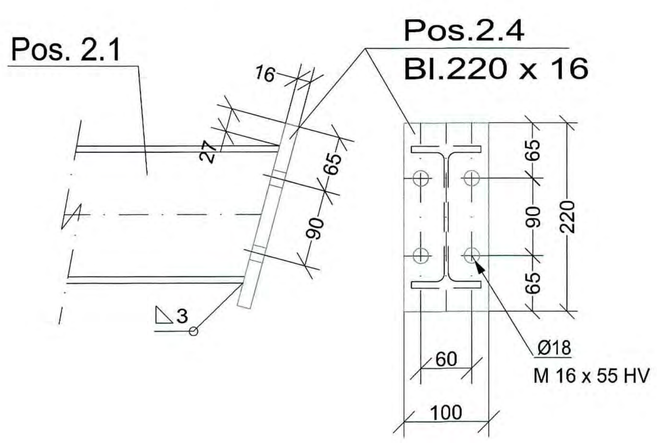

THE SCOPE OF THIS ENGINEERING STAMP IS FOR THE DESIGN OF THE FOLLOWING ITEMS:
TANK WALLS & RELATED CONNECTIONS,
ROOF FRAMING & RELATED CONNECTIONS, AND
FOUNDATION ANCHORAGE.

KEVIN M. McCORMICK
081.007526
LICENSED STRUCTURAL ENGINEER
STATE OF ILLINOIS
Signed 4-30-2021
Exp. 11-30-2021

MILLER CONSULTING ENGINEERS

Part List:

Pos.	Pcs.	Description	Length single	Total length	Weight single	Total weight	class:	Note:
2.1	24	IPE 160	3148 mm	75,55 m	15,80 kg	1193,69 kg	St 37	
2.2	24	L 200x200x16	100 mm	2,40 m	48,50 kg	116,4 kg	St 37	
2.3	24	Bl. 180 x 8	180 mm	4,32 m	3,77 kg	16,29 kg	St 37	
2.4	24	Bl. 220 x 16	100 mm	2,40 m	25,90 kg	62,16 kg	St 37	
						1388,54 kg		
	96	Bolt M16x45					10.9 hdg	HV-Connection
	96	Bolt M16x45					10.9 hdg	HV-Connection
	192	Nut M16					10.9 hdg	
	384	Washer A17					10.9 hdg	

Diese Zeichnung ist unser Eigentum.
Unbefugte Benutzung ist verboten
und wird gerichtlich verfolgt

This drawing remains our property.
Its use without due authority is forbidden
and will lead to legal action.

Bezeichnung / designation
Pos. 2 / 24x Roof Beams IPE 160
Roof D=10,25 m / 15°

Maßstab / Scale: 1:15 / Architectural D

Projekt / Project: Chicago

Kunde / customer: Green Arrow

Drawing Index: 03.2

	Datum /Date	Name
worked on	04.01.2021	LR
examined		
standard		

Schumann Tanks USA
Schumann Tanks USA Corp.
777 Brickell Avenue, Suite 500
Miami, FL 33131 USA

Zust. | Änderung/Change | Datum | Name

Zeichnungs-Nr. / design number: 2021/006-2.0 - 03

V.02

Overview

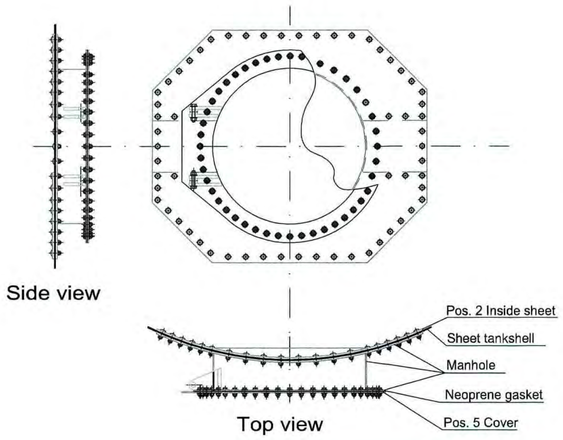

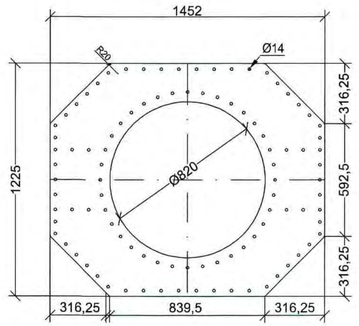

Pos. 1 Outside sheet

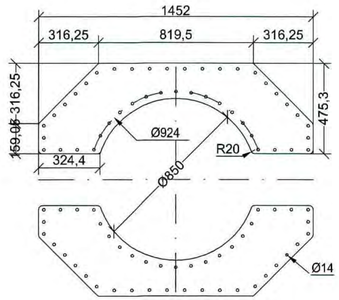

Pos. 2 Inside sheet

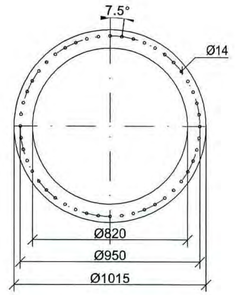

Pos. 4 Flange
Pos.10 Gasket

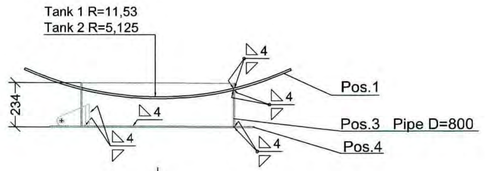

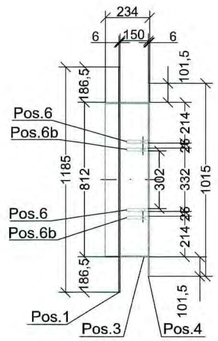

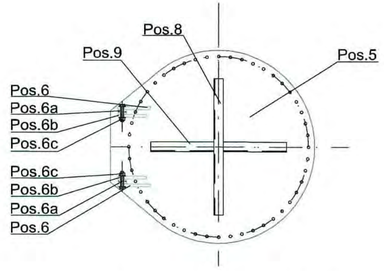

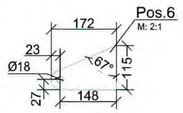

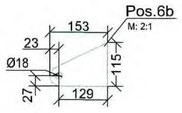

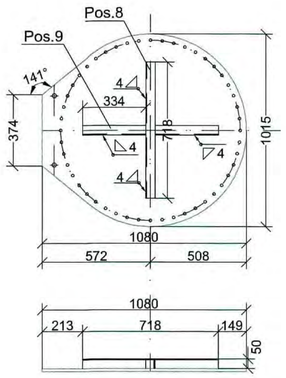

Pos. 5 Cover

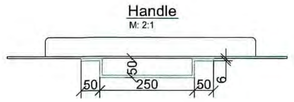

THE SCOPE OF THIS ENGINEERING STAMP IS FOR THE DESIGN OF THE FOLLOWING ITEMS:
TANK WALLS & RELATED CONNECTIONS,
ROOF FRAMING & RELATED CONNECTIONS, AND
FOUNDATION ANCHORAGE.

KEVIN A. McCORMICK 081.007526 LICENSED STRUCTURAL ENGINEER STATE OF ILLINOIS

Signed 4-30-2021
Exp 11-30-2022

MILLER CONSULTING ENGINEERS

Pos.:	Description:	Dimensions:	Piece:	Goodness:	Remark:
Pos. 1	Outside sheet	1452 x 1185	1		T1: S355, T2: AISI304
Pos. 2	Inside sheet	1452 x 455	2		T1: S355, T2: AISI304
Pos. 3	Pipe	DN 800	1		
Pos. 4	Flange	1015 x 97	1		
Pos. 5	Cover	1080 x 1015	1		
Pos. 6	Hinge	172 x 115 x 15	2		
Pos. 6a	Eye bolt	M 16 x 110	2		
Pos. 6b	Hinge	153 x 115 x 15	2		
Pos. 6c	Bolt	HV M16 x 85	2		
Pos. 8	Angle 50 x 5	718	1		
Pos. 9	Angle 50 x 5	334	2		
Pos. 10	Gasket	1015 x 97 x 5	1	Neoprene	
Screws	Cover	M12 x 40	48		Set
Screws	Tank	M12 x 35	86		Set / Silo bolt
Screws	Tank	M12 x 30	12		Set / Silo bolt

Diese Zeichnung ist unser Eigentum.
Unbefugte Benutzung ist verboten
und wird gerichtlich verfolgt.

This drawing remains our property.
Its use without due authority is forbidden
and will lead to legal action.

Bezeichnung / designation:
Man Way DN800 / 32"

Maßstab / Scale: 1:15 / Architectural D

Projekt / Project:
Chicago

	Datum /Date	Name
worked on	04.01.2021	LR
examined		
standard		

Kunde / customer:
Green Arrow

Drawing Index: 04

Schumann Tanks USA
Schumann Tanks USA Corp.
777 Brickell Avenue, Suite 500
Miami, FL 33131 USA

Zeichnungs-Nr. / design number:
2021/006-1.0/2.0 - 04

V.02

Zust. | Änderung/Change | Datum | Name

Detail fixing wind stiffener

M: 3:1

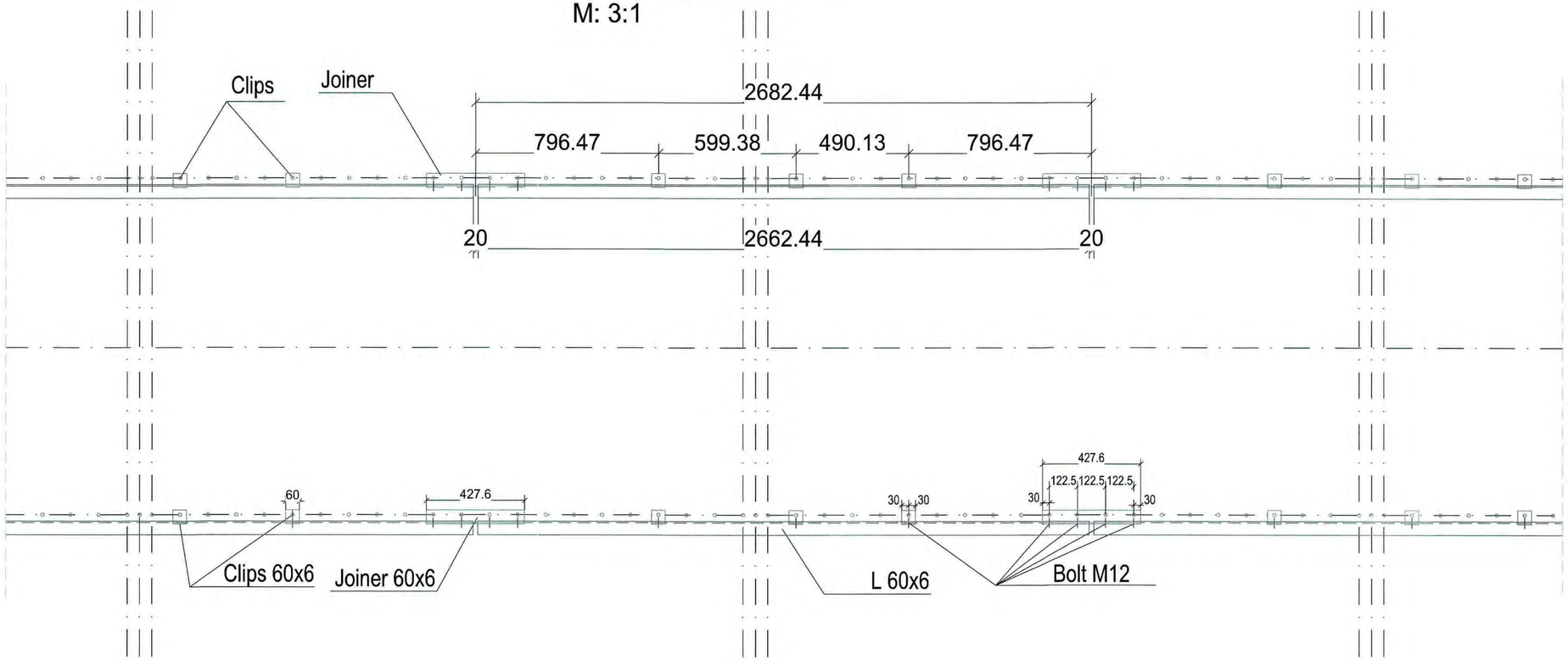

Detail "C"

M.: 5:1

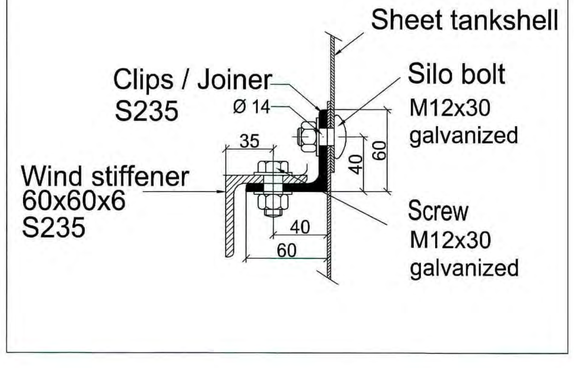

THE SCOPE OF THIS ENGINEERING STAMP IS FOR THE DESIGN OF THE FOLLOWING ITEMS:
TANK WALLS & RELATED CONNECTIONS,
ROOF FRAMING & RELATED CONNECTIONS, AND
FOUNDATION ANCHORAGE.

KEVIN M. McCORMICK
081.007526
LICENSED
STRUCTURAL
ENGINEER
STATE OF ILLINOIS
Signed 4-30-2021
Exp. 11-30-2022

MILLER
CONSULTING
ENGINEERS

Diese Zeichnung ist unser Eigentum.
Unbefugte Benutzung ist verboten
und wird gerichtlich verfolgt.

This drawing remains our property.
Its use without due authority is forbidden
and will lead to legal action.

Bezeichnung / designation:
Detail Wind stiffener 60x60x6

Maßstab / Scale: 1:10 / Architectural D

Projekt / Project: Chicago

	Datum /Date	Name
worked on	04.01.2021	LR
examined		
standard		

Kunde / customer: Green Arrow

Drawing Index: 05

Schumann Tanks USA
Schumann Tanks USA Corp.
777 Brickell Avenue, Suite 500
Miami, FL 33131 USA

Zeichnungs-Nr. / design number: 2021/006-1.0/2.0 - 05

V.01

Zust	Änderung/Change	Datum	Name

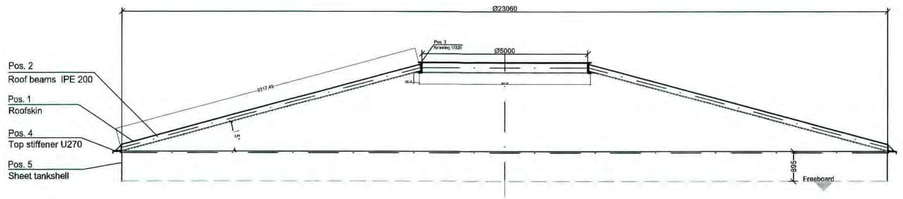

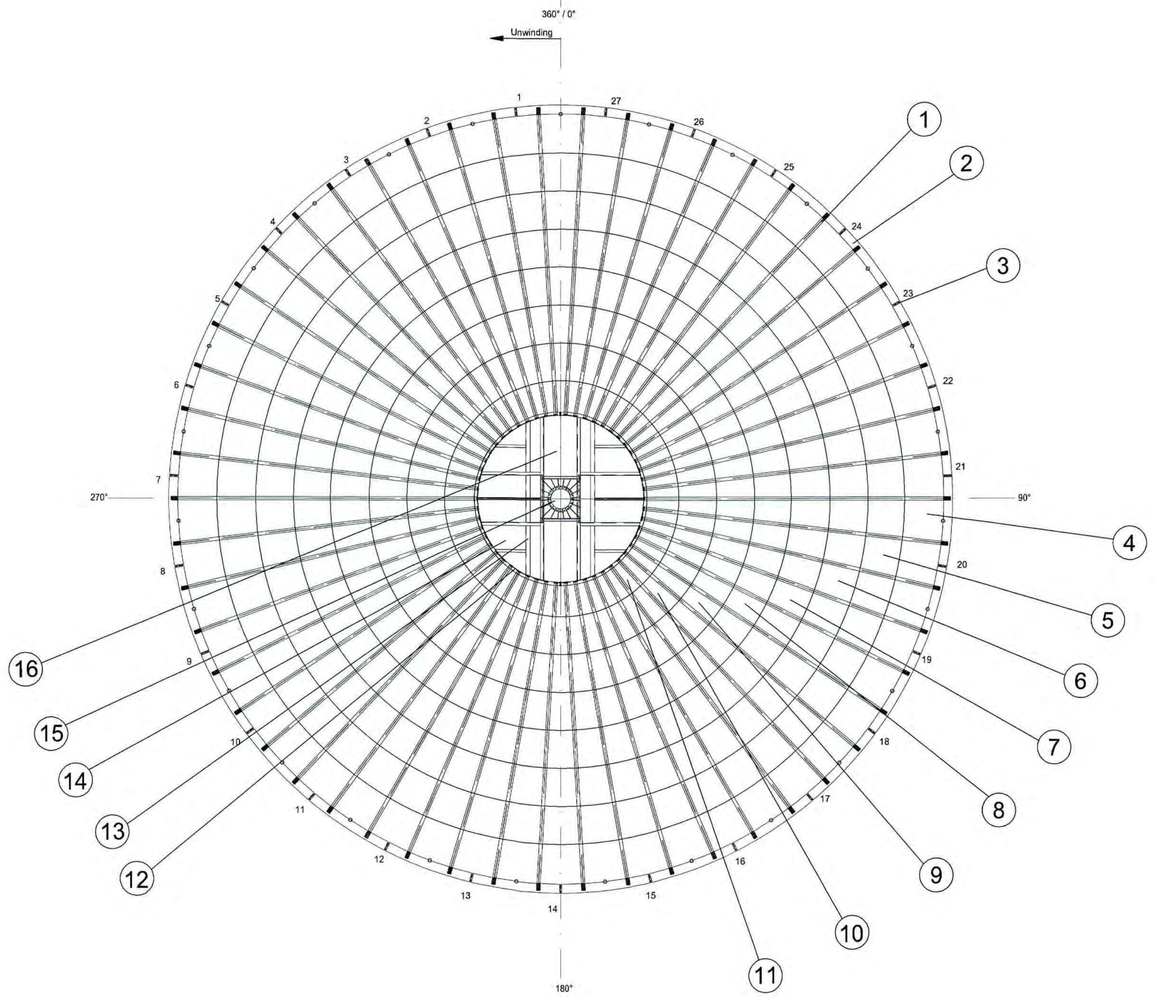

Note: Guardrail and walkway not shown

THE SCOPE OF THIS ENGINEERING STAMP IS FOR THE DESIGN OF THE FOLLOWING ITEMS:
TANK WALLS & RELATED CONNECTIONS,
ROOF FRAMING & RELATED CONNECTIONS, AND
FOUNDATION ANCHORAGE.

KEVIN M. McCORMICK
081.007526
LICENSED
STRUCTURAL
ENGINEER
STATE OF ILLINOIS
Signed 4-30-2021
Exp 11-30-2022

MILLER CONSULTING ENGINEERS

Parts list:

Pos.	Piece	Discription	Material	Remark
1	54	Roof beam	316 TI	IPE 200
2	27	Top stiffener	S235	U 200
3	54	Connector plate	S235	Laserpart
4	54	Stainless roof sheets 1,5 mm	316 TI	Sheet 1
5	54	Stainless roof sheets 1,5 mm	316 TI	Sheet 2
6	54	Stainless roof sheets 1,5 mm	316 TI	Sheet 3
7	54	Stainless roof sheets 1,5 mm	316 TI	Sheet 4
8	54	Stainless roof sheets 1,5 mm	316 TI	Sheet 5
9	54	Stainless roof sheets 1,5 mm	316 TI	Sheet 6
10	54	Stainless roof sheets 1,5 mm	316 TI	Sheet 7
11	54	Stainless roof sheets 1,5 mm	316 TI	Sheet 8
12	1	Crownring	S235JRG2	U 320
13	8	Crownbeam	S235JRG2	U 320
14	10	Sheet under crownring t=1,5 mm	316 TI	
15	1	Mixer flange	S235	DN 600
16	2	Cover of center	316 TI	

Diese Zeichnung ist unser Eigentum.
Unbefugte Benutzung ist verboten
und wird gerichtlich verfolgt.

This drawing remains our property.
Its use without due authority is forbidden
and will lead to legal action.

Bezeichnung / designation:
Roof D=23,06 m / IPE 200 /15°

Maßstab / Scala: 1:50 / Architectural D

Projekt / Project: Chicago

	Datum /Date	Name
worked on	04.01.2021	LR
examined		
standard		

Kunde / customer: Green Arrow

Drawing Index: 06.1

Schumann Tanks USA
Schumann Tanks USA Corp.
777 Britell Avenue, Suite 900
Miami, FL 33131 USA

Zeichnungs-Nr. / design number: 2021/006-1.0 - 06

V.02

Zust.	Änderung/Change	Datum	Name

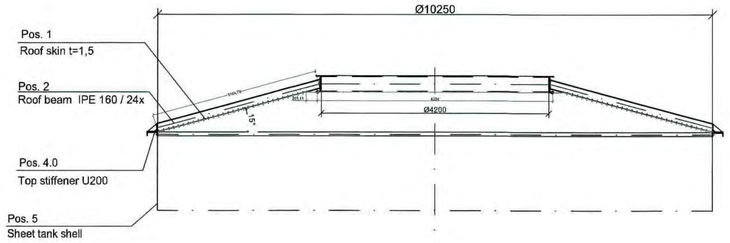

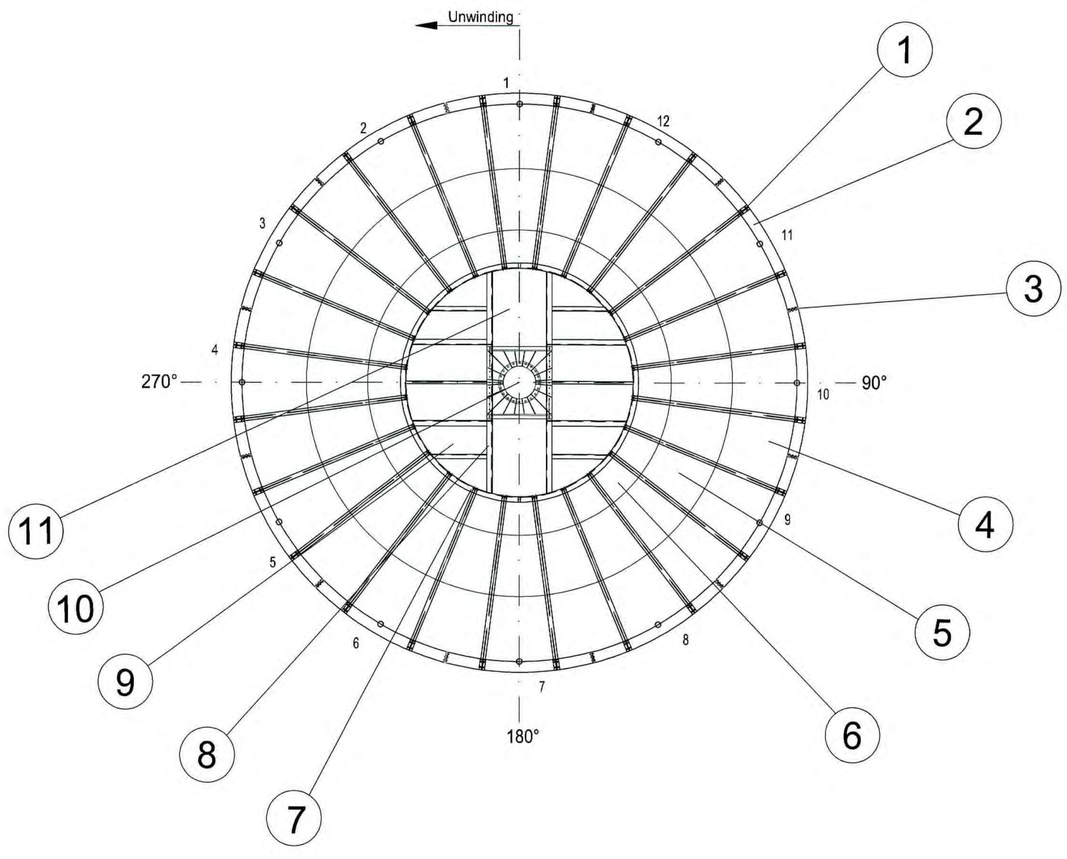

Note: Guardrail and walkway not shown

THE SCOPE OF THIS ENGINEERING STAMP IS FOR THE DESIGN OF THE FOLLOWING ITEMS:
TANK WALLS & RELATED CONNECTIONS,
ROOF FRAMING & RELATED CONNECTIONS, AND
FOUNDATION ANCHORAGE.

KEVIN M. McCORMICK
081.007526
LICENSED STRUCTURAL ENGINEER
STATE OF ILLINOIS
SIGNED 4-30-2021
EXP. 11-30-2022

MILLER CONSULTING ENGINEERS

Parts list:

Pos.	Piece	Discription	Material	Remark
1	24	Roof beam	316 TI	IPE 200
2	12	Top stiffener	S235	U 200
3	24	Connector plate	S235	Laserpart
4	24	Stainless roof sheets 1,5 mm	316 TI	Sheet 1
5	24	Stainless roof sheets 1,5 mm	316 TI	Sheet 2
6	24	Stainless roof sheets 1,5 mm	316 TI	Sheet 3
7	1	Crownring	S235JRG2	U 300
8	8	Crownbeam	S235JRG2	U 300
9	10	Sheet under crownring t=1,5 mm	316 TI	
10	1	Mixer flange	S235	DN 600
11	2	Cover of center	316 TI	

Diese Zeichnung ist unser Eigentum.
Unbefugte Benutzung ist verboten
und wird gerichtlich verfolgt.

This drawing remains our property.
Its use without due authority is forbidden
and will lead to legal action.

Bezeichnung / designation:
Roof D=10,25 m / IPE 160 /15°

Maßstab / Scale: 1:50 / Architectural D

Projekt / Project: Chicago

	Datum /Date	Name
worked on	04.01.2021	LR
examined		
standard		

Kunde / customer: Green Arrow

Drawing Index: 06.2

Schumann Tanks USA
Schumann Tanks USA Corp.
777 Brickell Avenue, Suite 500
Miami, FL 33131 USA

Zeichnungs-Nr. / design number: 2021/006-2.0 - 06

V.01

Zust. | Anderung/Change | Datum | Name

foundation angle 90x90x9
material: S235
(D= 23,06 m)
M 3:1

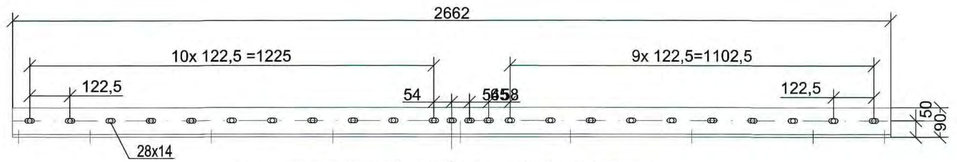

connection to tank shell 24 pieces M12x30 DIN 933

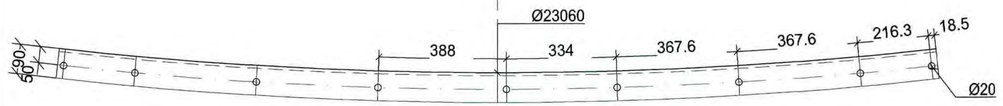

anchoring foundation 9 pieces UPAT UPM44 M16 (HEF = 320) R-70

Joiner
90x90x9

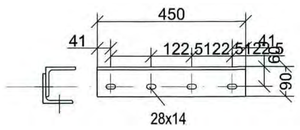

Detail "A"
M 10:1

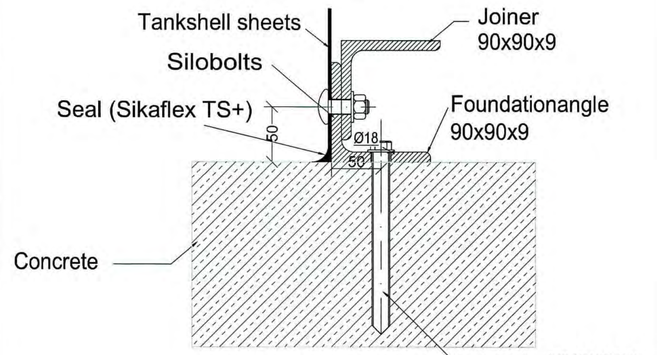

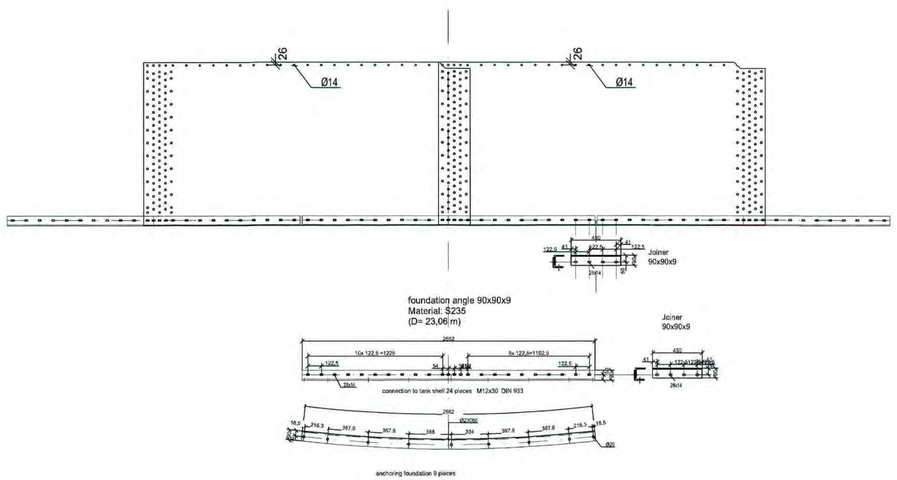

THE SCOPE OF THIS ENGINEERING STAMP IS FOR THE DESIGN OF THE FOLLOWING ITEMS: TANK WALLS & RELATED CONNECTIONS, ROOF FRAMING & RELATED CONNECTIONS, AND FOUNDATION ANCHORAGE.

KEVIN M. McCORMICK 081.007526 LICENSED STRUCTURAL ENGINEER STATE OF ILLINOIS
Signed 4-30-2021
Exp 11-30-2021

MILLER CONSULTING ENGINEERS

Diese Zeichnung ist unser Eigentum.
Unbefugte Benutzung ist verboten
und wird gerichtlich verfolgt.

This drawing remains our property.
Its use without due authority is forbidden
and will lead to legal action.

Bezeichnung / designation

Foundation angle 90x90x9
D= 23,06 m

Maßstab / Scala : 1:50 / Architectural D

Projekt / Project:
Chicago

Zust	Änderung/Change	Datum	Name		Datum /Date	Name
				worked on	04.01.2021	LR
				examined		
				standard		

Schumann Tanks USA
Schumann Tanks USA Corp.
777 Brickell Avenue, Suite 500
Miami, FL 33131 USA

Kunde / customer:
Green Arrow

Drawing Index:
07.1

Zeichnungs-Nr. / design number:
2021/006-1.0 - 07

V.01

foundation angle 90x90x9
material: S235
(D= 10,25 m)
M 3:1

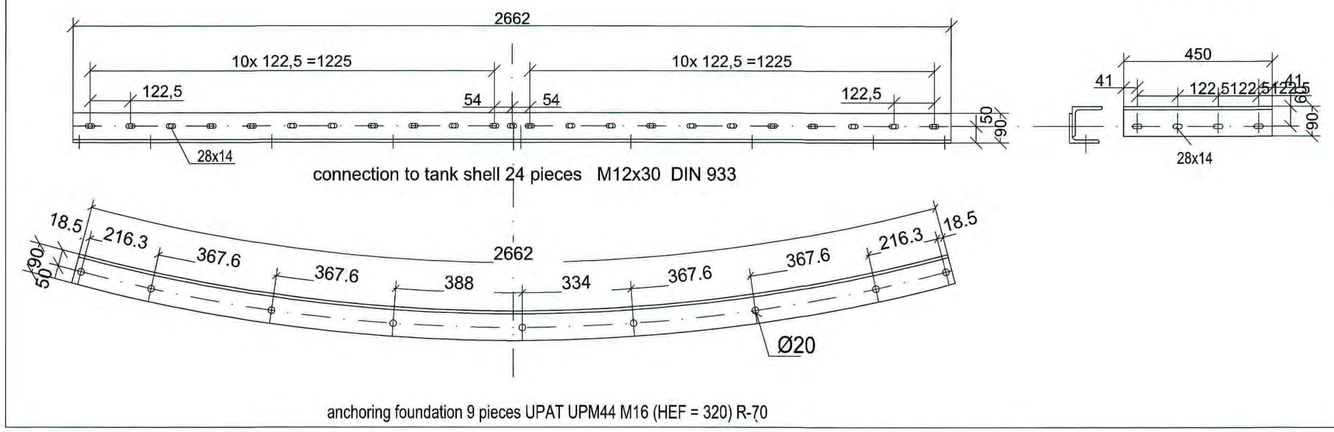

Joiner
90x90x9

Detail "A"
M. 10:1

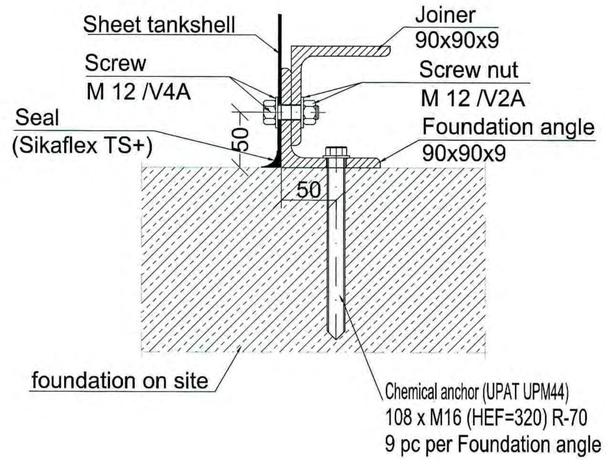

Foundation angle 90x90x9
D=10,25 m
M: 1:1

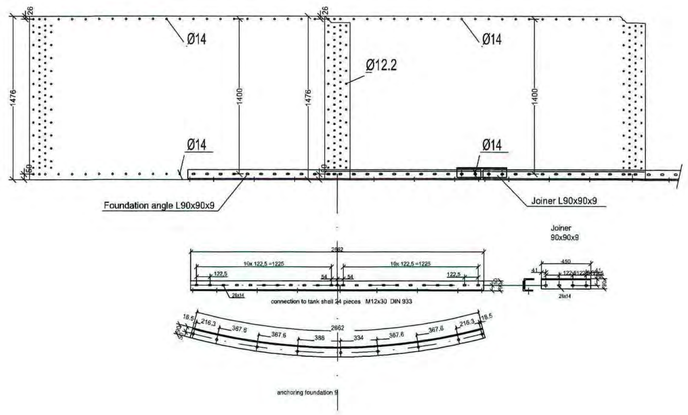

THE SCOPE OF THIS ENGINEERING STAMP IS FOR THE DESIGN OF THE FOLLOWING ITEMS:
TANK WALLS & RELATED CONNECTIONS,
ROOF FRAMING & RELATED CONNECTIONS, AND
FOUNDATION ANCHORAGE.

KEVIN M. McCORMICK
081.007526
LICENSED STRUCTURAL ENGINEER
STATE OF ILLINOIS
Signed 4-30-2021
Exp. 11-30-2021

MILLER CONSULTING ENGINEERS

Diese Zeichnung ist unser Eigentum.
Unbefugte Benutzung ist verboten
und wird gerichtlich verfolgt.

This drawing remains our property.
Its use without due authority is forbidden
and will lead to legal action.

Bezeichnung / designation
Foundation angle 90x90x9
D= 10,25 m

Zust	Änderung/Change	Datum	Name		Datum /Date	Name
				worked on	04.01.2021	LR
				examined		
				standard		

Schumann Tanks USA
Schumann Tanks USA Corp.
777 Brickell Avenue, Suite 500
Miami, FL 33131 USA

Maßstab / Scala : 1:50 / Architectural D

Projekt / Project:
Chicago

Kunde / customer:
Green Arrow

Drawing Index:
07.2

Zeichnungs-Nr. / design number:
2021/006-2.0 - 07

V.01

GREEN ARROW ENGINEERING	**Green Era** **Equipment Spec** **Tanks**	

T-205 Screened Digestate Tank

Belt Press Feed Tank

30,000 gallon cast-in-place concrete tank below main level building floor slab with bulkhead to lower level

REVISION LEVEL	DATE	DESCRIPTION	BY
R0	10/12/21	INITIAL RELEASE, WITH DRAWINGS	NMAST

GREEN ARROW ENGINEERING	**Green Era** **Equipment Spec** **Tanks**	

Section 1 - Basic Equip. Data		
1.0	Tag No.	T-205
1.1	Empty to	P-211A, belt press feed pump, to belt press S-211
1.2	Filling from	T-105 to P-090A/B to screen “strain press” S-205
1.3	Vent	Headspace directly ducted to odor control suction header.

Section 2 – Contractor / Engineer		
2.0	Contractor	Pepper Construction
2.1	Structural Engineer	Mike Haas, Greenberg Farrow, Arlington Heights

Section 3 – Fluid Properties – Screened Digestate								
3.0	Fluid Desc.	Digestate, Screened						
3.1	TS%	4% avg.	3.2	pH range	7.5 – 8.0 SU	3.3	Temp. range	90°-120° F
3.4	S.G.	1.0	3.5	Viscosity	100 cPs	3.6	Phase	Liquid
3.7	Solids Handling, Max Spherical Size	Screened to < 3/16 inch						
3.8	Abrasives	0.25% grit by weight						
3.9	Corrosives	Ammonia<4000 PPM, H2S<500 PPM, long chain fatty acids <0.5% v/v						
3.10	Notes	Pumped from digester across screen. Expect 10 to 15 degree temperature loss through the screening process. The digester is planned to be operated at thermophilic temperatures 122F to 130F.						

Section 4 – Tank Spec								
4.0	Volume	30,855 gallons at 10’ depth, refer to plans						
4.1	Basic Dimensions (inches)	Inside length	30.0’	Inside width	13’-9”	Inside height	10’-10”	
4.2	Material of Construction	Cast-in place concrete sidewalls. Pre-cast plank lid, 12-inch. 2-inch concrete topping. H-20 wheel loading.						
4.3	Max fill level	10.0’ @ 30,855 gallons						
4.4	Overflow Vol	10’-10” @ 33,426 gallons						
4.5	Volume per foot depth	3085.5 gal/ft						
4.6	Access	30-inch manway in lower sidewall and 30-inch manhole from top to cast-in-place ladder rungs.						
4.7	Partitions	None.						
4.8	Coating	Inside to be coated with flexible polyurethane sealer for wastewater service with immersion. Liner to protect concrete. Sherwin Williams Sherflex S system or engineered approved equal.						
4.9	Agitation	None.						

Section 5 - Nozzles		
5.0	See plan	All pipe penetrations will be core drilled after casting.
5.1	Pipe to wall seals	Link-seal or engineered approved equivalent.

Section 6 - Control		
6.0	Level control	Side-wall pressure transducer and top-down radar, std.
6.1	Fill indicator	SCADA only
6.2	Alarming	SCADA alarm management, per std.

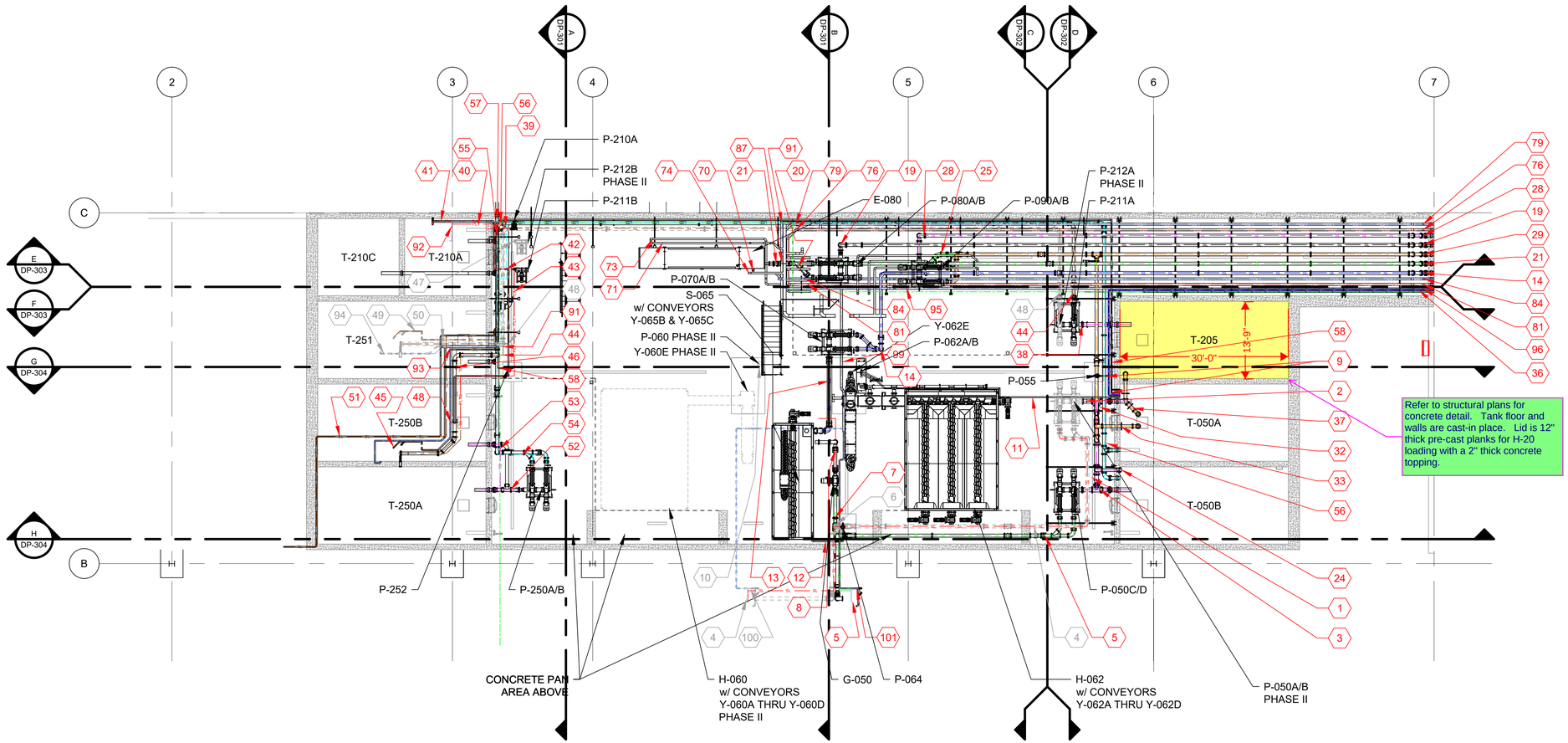

DIGESTER BUILDING LOWER LEVEL PROCESS PIPING

SCALE: 3/32" = 1'-0"

1 / DP-410

3/32" = 1'-0"

2' 0 2' 4' 6' 8' 12' 16' 24'

NO.	DATE
BY	
REVISION	
NO.	DATE
BY	
REVISION	
1	08/24/2021
BR	
RE-ISSUE WITH EQUIPMENT SUBMITTALS TO DATE	

ACEng
ADAMS & CHRISTENSEN ENGINEERING, INC.
782 WEXFORD CT.
GRAYSLAKE, ILLINOIS 60030
CERTIFICATE OF AUTHORIZATION NO. 05379

GREEN ARROW
2759 LONG ROAD
WOOSTER, OH 44691

THIS DRAWING CONTAINS VALUABLE CONFIDENTIAL AND PROPRIETARY INFORMATION THAT BELONGS TO GREEN ARROW ("GA"), AND IS SUBJECT TO A CONFIDENTIALITY AND NONDISCLOSURE AGREEMENT. RECIPIENT ACCEPTS POSSESSION OF THIS DRAWING, AND RETAINS ALL COMMON LAW, STATUTORY AND OTHER RIGHTS AND PRIVILEGES WITH RESPECT HERETO, INCLUDING COPYRIGHTS. THE INFORMATION CONTAINED HEREIN MAY NOT BE USED, REPRODUCED OR DISCLOSED FOR UNAUTHORIZED PURPOSE, NOR REPRODUCED BY OR PROVIDED TO ANY THIRD PARTY, WITHOUT THE PRIOR WRITTEN CONSENT OF GA.

©2030, GREEN ARROW.
ALL RIGHTS RESERVED.

DIGESTER BUILDING
LOWER LEVEL
PROCESS PIPING

GREEN ERA
650 W. 83RD ST.
CHICAGO, IL 60620

AREA	CHECKED BY
	NM
JOB NO.	DRAWN BY
1512	BR
SCALE	DATE
SEE NOTE	04/09/2021
DWG NO.	
SHEET NO.	
DP-510	

Green Arrow\02 Projects\1512 Chicago - Feldman - Green Era\07 Drawings\04 Construction\Green Era Equipment Layout.dwg

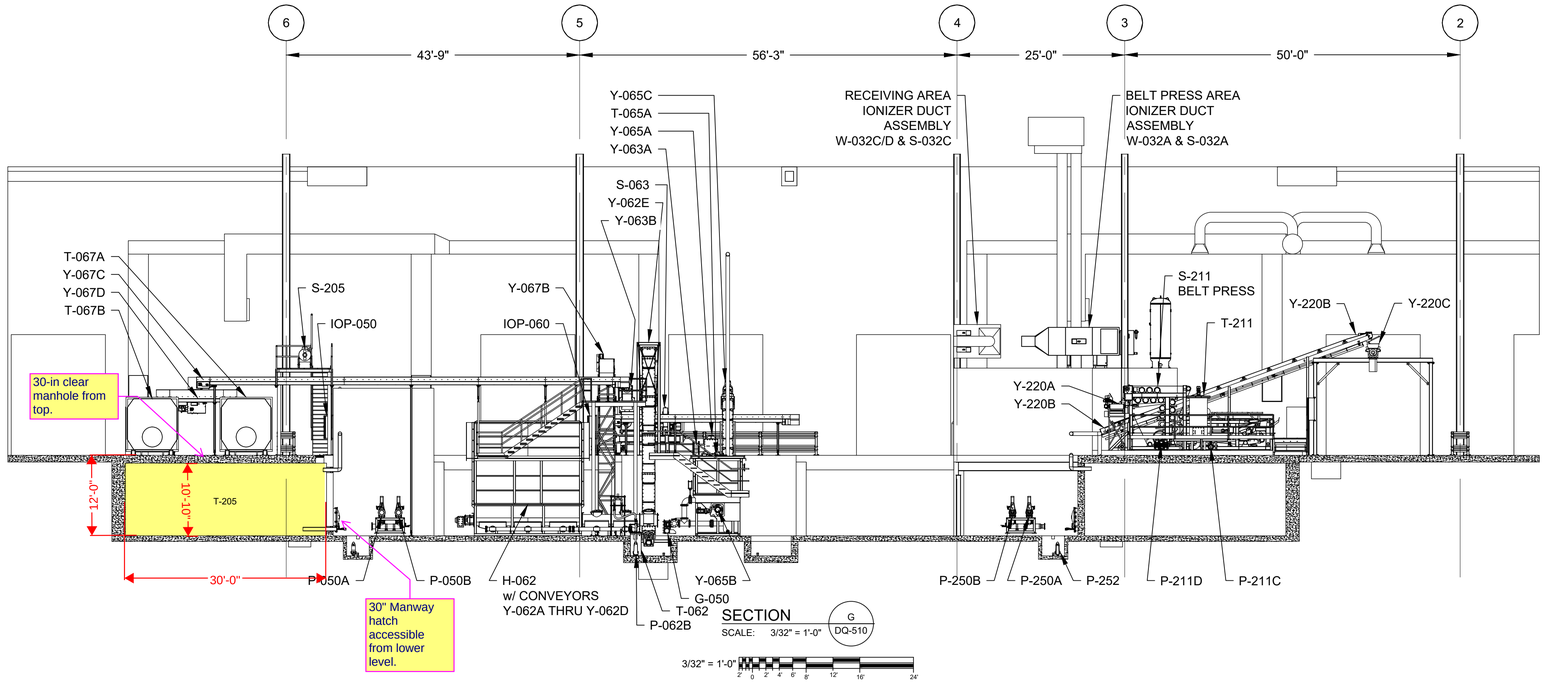

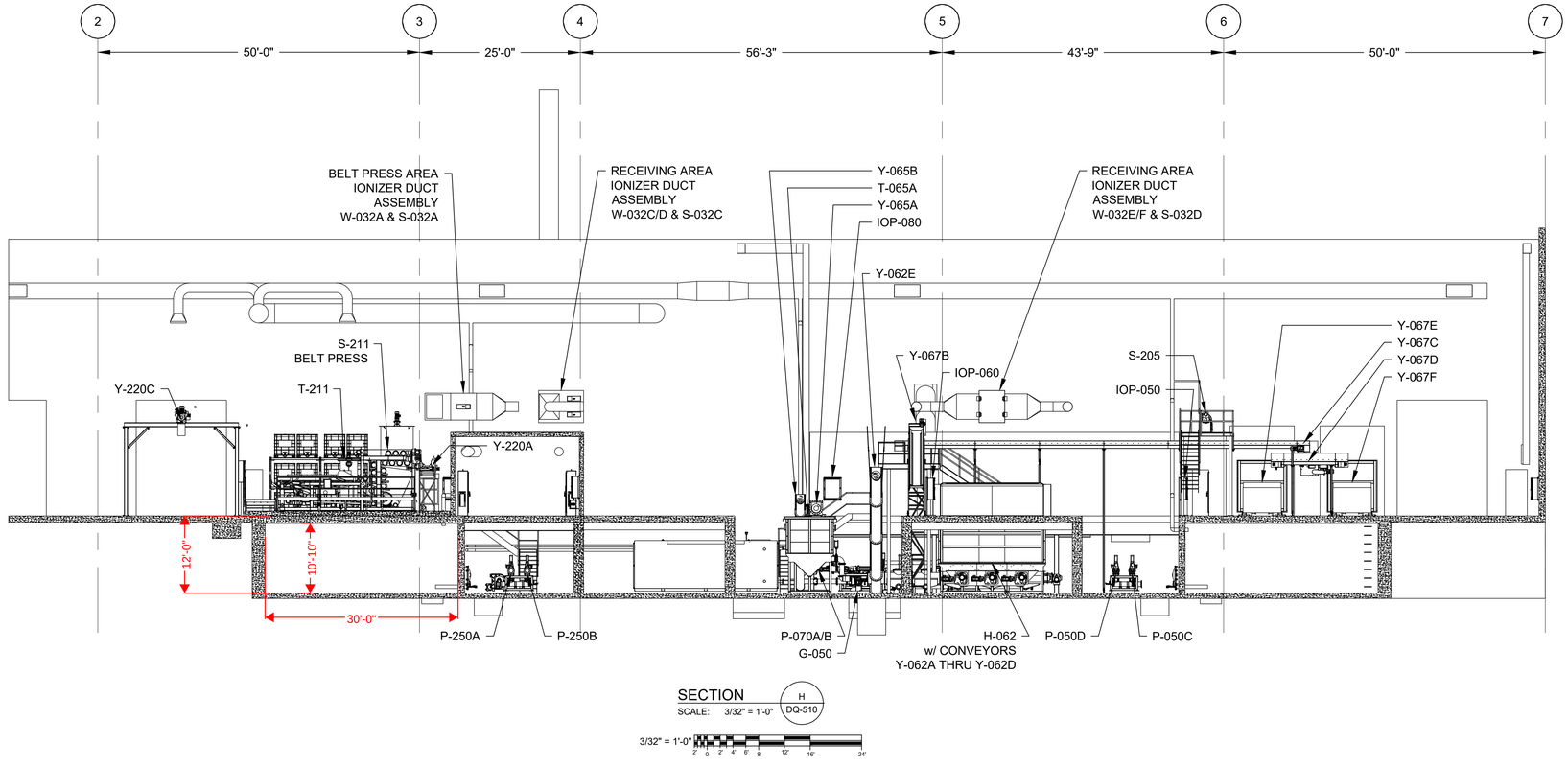

NO.	DATE
BY	
REVISION	

NO.	DATE
BY	
REVISION	

NO.	DATE
1	08/24/2021
BY	
BR	
REVISION	
RE-ISSUE WITH EQUIPMENT SUBMITTALS TO DATE	

ADAMS & CHRISTENSEN ENGINEERING, INC.
762 WEXFORD CT.
GRAYSLAKE, ILLINOIS 60030
CERTIFICATE OF AUTHORIZATION NO. 05379

GREEN ARROW
2759 LONG ROAD
WOOSTER, OH 44691

THIS DRAWING CONTAINS VALUABLE PROPRIETARY AND CONFIDENTIAL INFORMATION THAT BELONGS TO GREEN ARROW ("GA"), AND IS SUBJECT TO CONFIDENTIALITY AND NONDISCLOSURE AGREEMENT. GA IS THE AUTHOR AND OWNER OF THIS DRAWING, AND RETAINS ALL COMMON LAW, STATUTORY AND OTHER LEGAL RIGHTS, INCLUDING COPYRIGHTS, IN THE INFORMATION CONTAINED HEREIN. MAY NOT AT ANY TIME BE USED FOR AN UNAUTHORIZED PURPOSE, NOR REPRODUCED, BY OR PROVIDED TO ANY THIRD PART WITHOUT THE PRIOR WRITTEN CONSENT OF GA.

©2020, GREEN ARROW.
ALL RIGHTS RESERVED.

DIGESTER BUILDING
PROCESS EQUIPMENT
SECTIONS

GREEN ERA
650 W. 63RD ST.
CHICAGO, IL 60620

AREA	CHECKED BY
	NM
JOB NO.	DRAWN BY
1512	BR
SCALE	DATE
SEE NOTE	12/21/2020
DWG NO.	

SHEET NO.
DQ-304

GREEN ARROW ENGINEERING	**Green Era** **Equipment Spec** **Dewatering Equipment**	

S-211 Belt Press

Digestate Dewatering

REVISION LEVEL	DATE	DESCRIPTION	BY
0	12/03/18	INITIAL RELEASE	NMAST

GREEN ARROW ENGINEERING

Green Era
Equipment Spec
Dewatering Equipment

Section 1 - Basic Equip. Data		
1.0	Tag No.	S-211
1.1	Digestate Feed From	Pumps (P-211A) from T-205 (Screened Digestate Tank). Gravity fed onto belt from T-211, flocculation tank
1.2	Wash Water	Primary recycled filtrate from gravity belt drain pan with potable water make-up. Booster pump P-211C
1.3	Thickened Sludge to	T-210 Cake storage silo via Y-210A, Y-210B, Y-210C, Y-210D
1.4	Filtrate to	Collected in catch basin under press and gravity drained to filtrate tank T-250.

Section 2 – Digestate Fluid Properties (feed)								
2.0	Fluid Desc.	Screened digestate / flocculated soilds						
2.1	TS%	3-5% avg.	2.2	pH range	7.5 – 8.0 SU	2.3	Temp. range	75-90° F
2.4	S.G.	1.0	2.5	Viscosity	100 cPs	2.6	Phase	Liquid
2.7	Solids Handling, Max Spherical Size	N/A						
2.8	Abrasives	None						
2.9	Corrosives	Ammonia<4000 PPM, H2S<500 PPM, long chain fatty acids <0.5% v/v						
2.10	Notes							

Section 3 – Filtrate Characterization								
3.0	Fluid Desc.	Wastewater, belt press filtrate						
3.1	TS%	< 0.1%	3.2	pH range	7.5-8.5 SU	3.3	Temp. range	75-90° F
3.4	S.G.	1.0	3.5	Viscosity	1 CpS	3.6	Phase	Liquid
3.7	Solids Handling, Max Spherical Size	N/A						
3.8	Abrasives	None						
3.9	Corrosives	NH4<3000 mg/l						
3.10	Notes	Drains to filtrate tanks under press.						

GREEN ARROW ENGINEERING	**Green Era** **Equipment Spec** **Dewatering Equipment**	

Section 4 – Dewatered Cake Characterization								
4.0	Description	Dewatered solids from digested food waste after polymer assisted flocculation.						
4.1	Min. TS%	20% avg.	4.2	pH range	7.0 - 8.0 SU	4.3	Temp. range	65-90° F
4.4	Avg. Density	1666 lbs/CY	4.5	Avg. percent contaminate	<0.2% w/w	4.6	Phase	Solids
4.7	Consistency	Stackable, sticky						
4.8	Abrasives	Grit inclusion possible, fines/sand						
4.9	Corrosives	Ammonia, H2S gas						
4.10	Notes	NPK will vary with feedstock composition. Est. 18-0.8-0.9 as percent of dry weight basis. C:N ratio – 1.5 (WRAP study)						

Section 5 – System Throughput					
5.0	Digestate Flow Range	160 GPM @ 2.5%TS to 67 GPM @ 6% TS at a loading rate of 1000 lbs of solids per meter of belt. See section 6			
5.1	Solids TPH	4 – 5 (see sect. 7)	5.2	Solids CY/HR	4.8 – 6.0
5.3	Polymer	18-20 lbs 100% active polymer per dry ton	5.4	Polymer Makedown rate	200 parts water to 1 part emulsion polymer
5.5	Polymer GPH	5.0 – 7.0 (see sect. 8)	5.6	Make-down water (GPH)	1,000 – 1,400 (see sect. 8)
5.7	Wash Water	80 GPM @ 80 PSIG	5.8	Hourly potable water use for wash, excludes start-up/shut-down	400 GPH
5.9	Notes	Belt wash water is recycled filtrate from gravity belt drain pan with potable water make-up. Assumed 55 minute recycle per hour of operation with 5 minute fresh water wash to flush nozzles and to rinse film from belting.			

GREEN ARROW ENGINEERING

Green Era
Equipment Spec
Dewatering Equipment

Section 6 – Req. flow with variable solids			
TS %	*lbs/hr (wet)*	*GPH*	*GPM*
2.50%	80,000	9,592	160
2.75%	72,727	8,720	145
3.00%	66,667	7,994	133
3.25%	61,538	7,379	123
3.50%	57,143	6,852	114
3.75%	53,333	6,395	107
4.00%	50,000	5,995	100
4.25%	47,059	5,643	94
4.50%	44,444	5,329	89
4.75%	42,105	5,049	84
5.00%	40,000	4,796	80
5.25%	38,095	4,568	76
5.50%	36,364	4,360	73
5.75%	34,783	4,171	70
6.00%	33,333	3,997	67

6.1 - Assuming a loading rate of 1000 dry pounds of solids per hour per meter of belt…

Example Calc. at 3.5% Total Solids

$$digestate\ \frac{lbs}{hr} = \frac{\frac{1000\ lbs\ solids}{meter\ belt * hr} * 2\ m}{0.0350}$$

$$= 57{,}143\ \frac{lbs}{hr}$$

$$digestate\ \frac{Gal}{hr} = \frac{57{,}143\ \frac{lbs}{hr}}{8.34\ \frac{lbs}{gal}}$$

$$= 6{,}852\ \frac{Gal}{hr}$$

$$digestate\ \frac{Gal}{min} = \frac{6{,}852\ {}^{gal}/_{hr}}{60\ {}^{min}/_{hr}}$$

$$= 114\ \frac{Gal}{min}$$

Section 7 – Wet Tons Cake per Hour		
Dry LBS/M belt	*cake TS*	*Wet Tons/hr*
1,000	20%	5.00
1,000	21%	4.76
1,000	22%	4.55
1,000	23%	4.35
1,000	24%	4.17
1,000	25%	4.00

7.1 - Assuming a loading rate of 1000 dry pounds of solids per hour per meter of belt…

Example Calc. at 20% Total Solids

$$Cake\ wet\ TPH = \frac{\frac{1000\ lbs\ solids}{meter\ belt * hr} * 2\ m}{0.20 * 2000\ {}^{lbs}/_{ton}}$$

$$= 5.00\ \frac{tons}{hr}$$

Section 8 – Polymer Usage			
Polymer		*Make-down Water*	
lbs/dry ton	GPH	GPH	GPM
17	5.0	1,000	16.7
17.5	5.1	1,020	17.0
18	5.3	1,060	17.7
18.5	5.4	1,080	18.0
19	5.6	1,120	18.7
19.5	5.7	1,140	19.0
20	5.9	1,180	19.7
20.5	6.0	1,200	20.0
21	6.2	1,240	20.7
21.5	6.3	1,260	21.0
22	6.5	1,300	21.7
22.5	6.6	1,320	22.0
23	6.8	1,360	22.7
23.5	6.9	1,380	23.0

8.1 - Example calculation for emulsion polymer usage:

$$1000\frac{dry\ lbs\ solids}{meter\ belt-hr}*2\ \frac{meter\ belt}{press}*\frac{1}{2000}\frac{ton}{lbs}*18\ \frac{lbs}{dry\ ton}*\frac{1}{8.5}\ \frac{gal}{lbs}*\frac{1}{40\%\ active}=5.3\ \frac{Gal}{hr}$$

8.2 - Example Calculation for make-down water:

$$5.3\ \frac{Gal}{hr}\ polymer*200\ \frac{Water}{Polymer}=1{,}060\ \frac{Gal}{hr}\ water$$

GREEN ARROW ENGINEERING	**Green Era** **Equipment Spec** **Dewatering Equipment**	

Section 9 - Equipment Data					
9.0	Type	Tower Press, 2 belt	9.1	Belt Width	2.2 M
9.2	Mfg.	Charter Machine	9.3	Model No.	BP22.54
9.4	Drive	Gearbox reducer, two separate drives			
9.5	RPM	? 300?	9.6	Belt Speed	X FPM
9.7	Inlet Connect.	6 inch flange, connect pipe between floc tank and press			
9.8	Discharge Connect., filtrate	6 inch ANSI flange from drain pans			
9.9	Discharge connection, cake	Falls from doctor blade (weighted scraper) directly onto transverse belt conveyor (Y-210A)			
9.10	Wash water supply	2 inch NPT	9.11	Compressed air supply	1/4 inch OD tubing to local IOP panel
9.12	Air usage	2 CFM	9.13	Weight	29,000 pounds (dry)
9.14	Notes				

Section 10 - Belt Spec					
10.0	Type	Polyester weave	10.1	Mfg.	GSM Filtration
10.2	Spec. No.	GSM 32-550	10.3	Mesh	46 x 13 per inch
10.4	Weave	3/2 twill	10.5	Yarn typ.	0.026” Monofilament warp/ 0.039” monofilament weft
10.6	Air Perm.	540-570 CFM	10.7	Thickness	0.092”
10.8	Weight	48.8 oz. / SY	10.9	Seams	316 SS clipper

Section 11 - Motor Data – Belt Drives, VFD, Quantity 2					
11.0	Motor HP	3.0	11.1	Frame	182TC - confirm
11.2	RPM	1800	11.3	Voltage	3-ph 460
11.4	SF	1.15	11.5	Duty	Continuous
11.6	FLA	4.2 A Typ.	11.7	Shaft	1.125 Typ.
11.8	Washdown	Yes, SS housing	11.9	X-proof	-
11.10	Encl.	TEFC			

Manufacturer Drawings

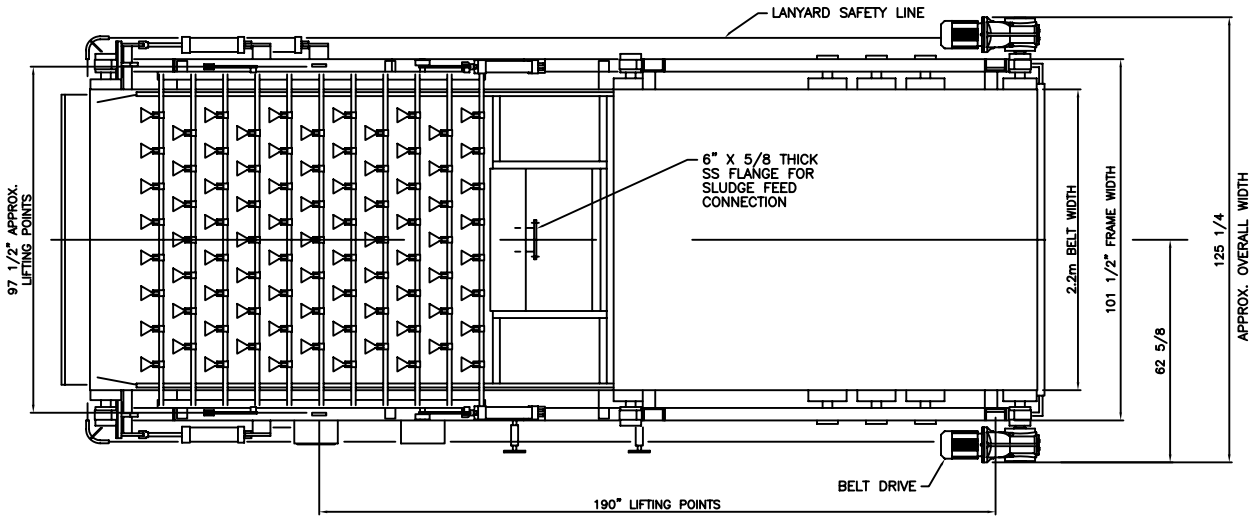

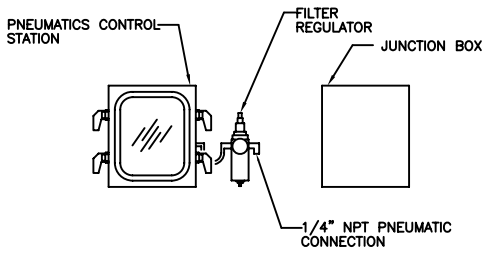

DETAIL "A"

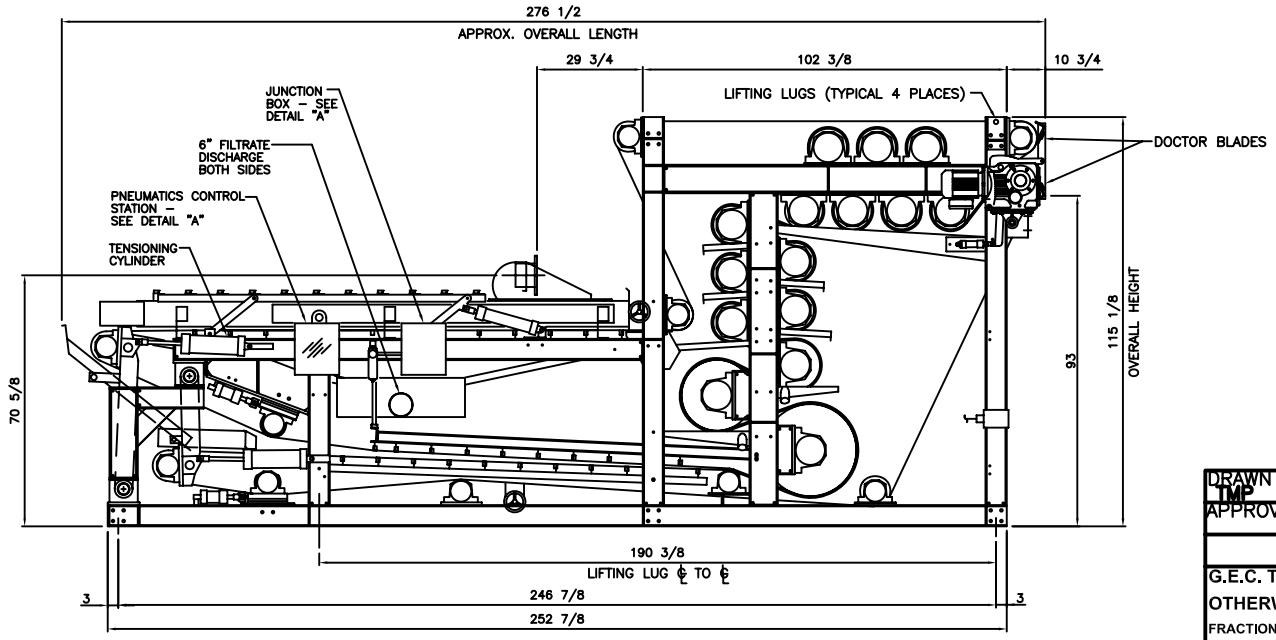

NOTES:

1) ALL DIMENSIONS ARE IN INCHES.
2) APPROXIMATE DRY WEIGHT 29,000 POUNDS

DRAWN TMP	9/14/06	CHARTER MACHINE COMPANY 55 WESTER AVE METUCHEN N.J. 08840
APPROVED		TITLE: TOWER PRESS 22.54SH MACHINE VIEWS
G.E.C. TOLERANCES UNLESS OTHERWISE SPECIFIED FRACTIONAL DIM ±1/64 DECIMAL DIM ±.005 ANGLE ± 1/2 SURFACE FINISH 125		SIZE B; DWG NO. TP22.54SH–02; REV 0 SCALE NOT TO SCALE; SHEET 1 OF 1

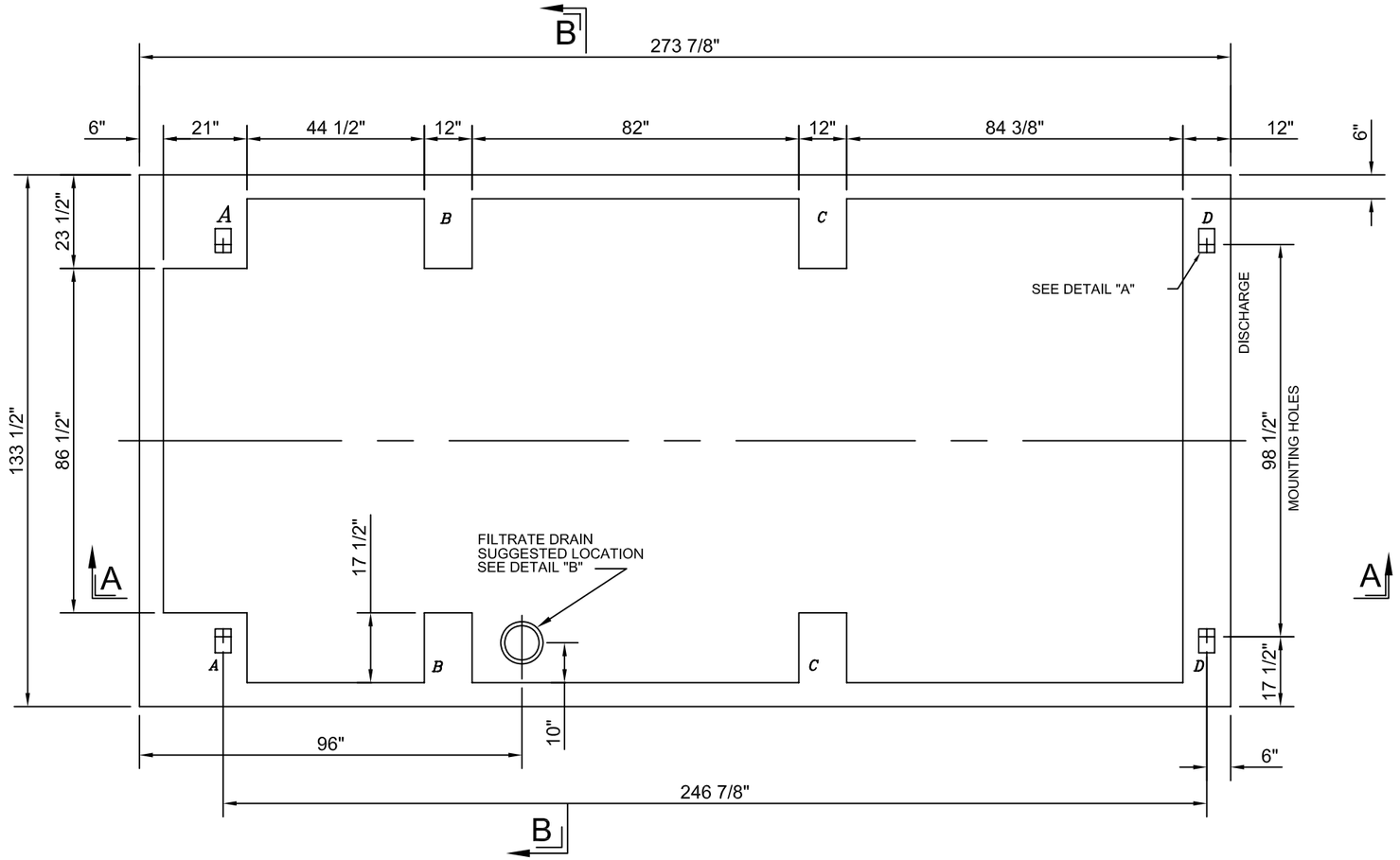

SECTION A-A

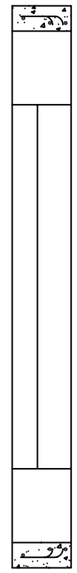

SECTION B-B

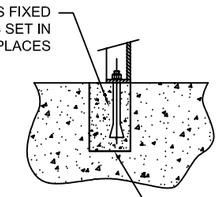

DETAIL "A"

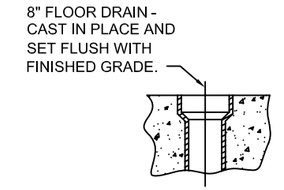

DETAIL "B"

NOTES:

1) SUGGESTED 4000 PSI CONCRETE
2) SUGGESTED REINFORCING - #4 REBARS AT 12" TOP AND BOTTOM - BOTH WAYS
3) SLOPE FLOOR TO DRAIN

LOAD POINTS		
POINT	DRY WT.	WET WT.
A	1,900	2,050
B	2,140	2,440
C	5,740	6,050
D	5,680	5,940
TOTAL	29,020	31,060

DRAWN TMP	10/31/06
APPROVED	

G.E.C. TOLERANCES UNLESS OTHERWISE SPECIFIED

FRACTIONAL DIM ±1/64
DECIMAL DIM ±.005
ANGLE ± 1/2
SURFACE FINISH 125

CHARTER MACHINE COMPANY
55 WESTER AVE METUCHEN N.J. 08840

TITLE
TOWER PRESS 22.54SH
FOUNDATION

SIZE		DWG NO.	REV
B		TP22.54SH-03	0

SCALE NONE SHEET 1 OF 1

GREEN ARROW ENGINEERING	**Green Era** **Equipment Spec** **Tanks**	

T-250AB Filtrate Tanks

Belt Press Filtrate Tanks

30,000 gallon cast-in-place concrete tanks below main level building floor slab with bulkhead to lower level

REVISION LEVEL	DATE	DESCRIPTION	BY
R0	10/12/21	INITIAL RELEASE, WITH DRAWINGS	NMAST

GREEN ARROW ENGINEERING	**Green Era** **Equipment Spec** **Tanks**	

Section 1 - Basic Equip. Data		
1.0	Tag No.	T-250AB
1.1	Empty to	P-250A, P-250B, MWRD force main from building
1.2	Filling from	S-211, S-212 (phase II) belt presses through gravity floor drain. Presses fed from P-211A, P-212A.
1.3	Vent	Headspace directly ducted to odor control suction header.

Section 2 – Contractor / Engineer		
2.0	Contractor	Pepper Construction
2.1	Structural Engineer	Mike Haas, Greenberg Farrow, Arlington Heights

Section 3 – Fluid Properties - Filtrate								
3.0	Fluid Desc.	Wastewater, belt press filtrate						
3.1	TS%	<1% avg.	3.2	pH range	7.0 – 8.5 SU	3.3	Temp. range	70°- 100° F
3.4	S.G.	1.0	3.5	Viscosity	1 cPs	3.6	Phase	Liquid
3.7	Solids Handling, Max Spherical Size	1/16 inches						
3.8	Abrasives	None						
3.9	Corrosives	NH4<3000 mg/l						
3.10	Notes	MWRD will sample the combined outfall at W 83rd that includes the sanitary waste. Green Era will sample inside the building from the process wastewater force main after P-250AB.						

Section 4 – Tank Spec								
4.0	Volume	30,855 gallons at 10’ depth, refer to plans						
4.1	Basic Dimensions (inches)	Inside length	30.0’	Inside width	13’-9”	Inside height	10’-10”	
4.2	Material of Construction	Cast-in place concrete sidewalls. Pre-cast plank lid, 12-inch. 2-inch concrete topping. H-20 wheel loading.						
4.3	Max fill level	10.0’ @ 30,855 gallons						
4.4	Overflow Vol	10’-10” @ 33,426 gallons						
4.5	Volume per foot depth	3085.5 gal/ft						
4.6	Access	30-inch manway in lower sidewall and 30-inch manhole from top to cast-in-place ladder rungs.						
4.7	Partitions	None.						
4.8	Coating	Inside to be coated with flexible polyurethane sealer for wastewater service with immersion. Liner to protect concrete. Sherwin Williams Sherflex S system or engineered approved equal.						
4.9	Agitation	None.						

Section 5 - Nozzles		
5.0	See plan	All pipe penetrations will be core drilled after casting.
5.1	Pipe to wall seals	Link-seal or engineered approved equivalent.

Section 6 - Control		
6.0	Level control	Side-wall pressure transducer and top-down radar, std.
6.1	Fill indicator	SCADA only
6.2	Alarming	SCADA alarm management, per std.

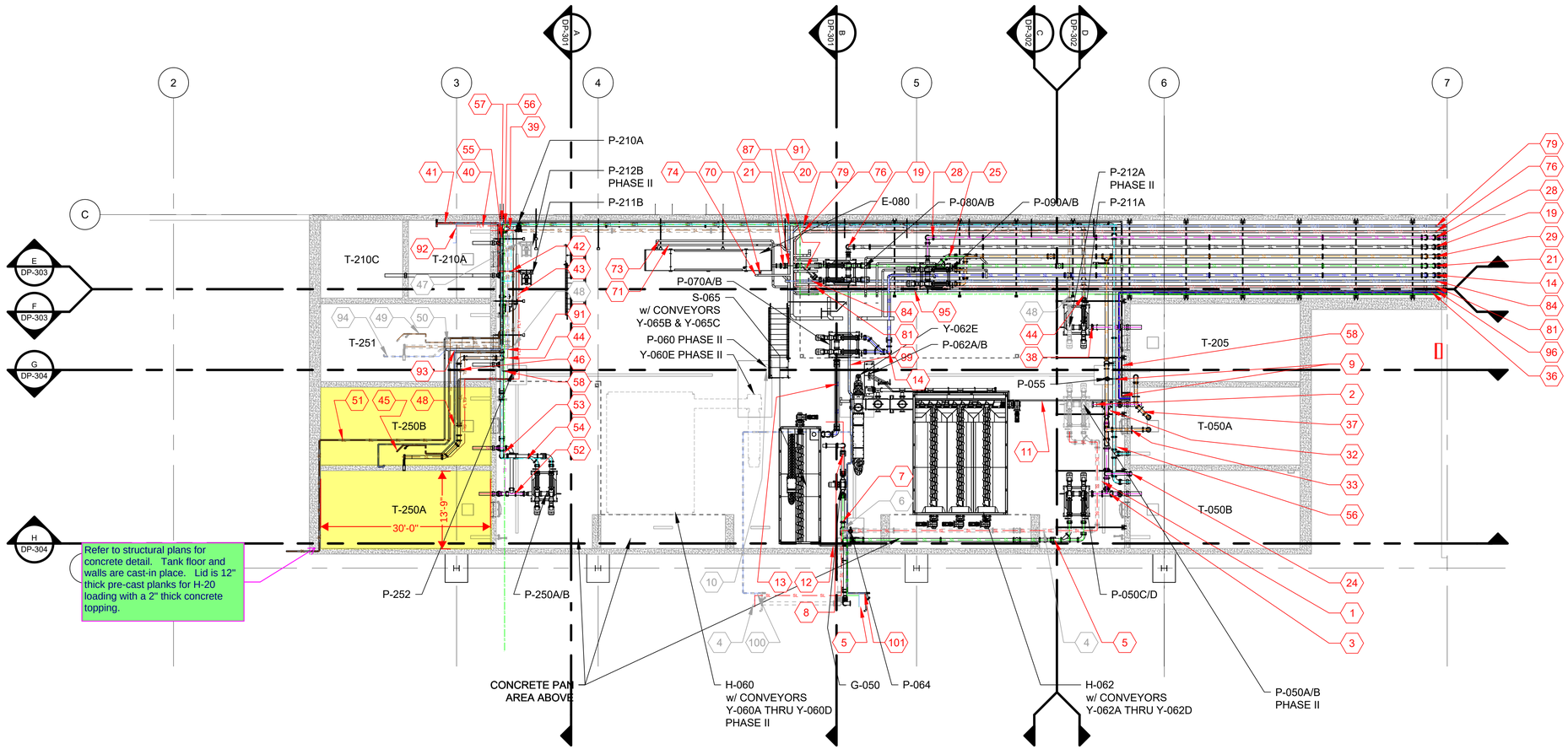

DIGESTER BUILDING LOWER LEVEL PROCESS PIPING

SCALE: 3/32" = 1'-0"

1 / DP-410

3/32" = 1'-0"

2' 0 2' 4' 6' 8' 12' 16' 24'

NO.	DATE
BY	
REVISION	
NO.	DATE
BY	
REVISION	
1	08/24/2021
BY: BR	
REVISION: RE-ISSUE WITH EQUIPMENT SUBMITTALS TO DATE	

ACEng
ADAMS & CHRISTENSEN ENGINEERING, INC.
782 WEXFORD CT.
GRAYSLAKE, ILLINOIS 60030
CERTIFICATE OF AUTHORIZATION NO. 05379

GREEN ARROW
2759 LONG ROAD
WOOSTER, OH 44691

THIS DRAWING CONTAINS VALUABLE CONFIDENTIAL AND PROPRIETARY INFORMATION THAT BELONGS TO GREEN ARROW ("GA"), AND IS SUBJECT TO A CONFIDENTIALITY AND NONDISCLOSURE AGREEMENT. GA IS THE AUTHOR AND OWNER OF THE INFORMATION AND HAS ALL RIGHTS UNDER COMMON LAW, STATUTORY AND OTHER RIGHTS AND PRIVILEGES WITH RESPECT HERETO, INCLUDING COPYRIGHTS. THE INFORMATION CONTAINED HEREIN MAY NOT BE USED, DISCLOSED OR REPRODUCED IN ANY WAY FOR ANY PURPOSE, NOR PROVIDED BY OR PROVIDED TO ANY THIRD PARTY, WITHOUT THE PRIOR WRITTEN CONSENT OF GA.

©2020, GREEN ARROW.
ALL RIGHTS RESERVED.

DIGESTER BUILDING LOWER LEVEL PROCESS PIPING

GREEN ERA
650 W. 83RD ST.
CHICAGO, IL 60620

AREA	CHECKED BY
	NM
JOB NO. 1512	DRAWN BY BR
SCALE SEE NOTE	DATE 04/09/2021
DWG NO.	
SHEET NO. DP-510	

Green Arrow/02 Projects/1512 Chicago - Feldman - Green Era/07 Drawings/04 Construction/Green Era Equipment Layout.dwg

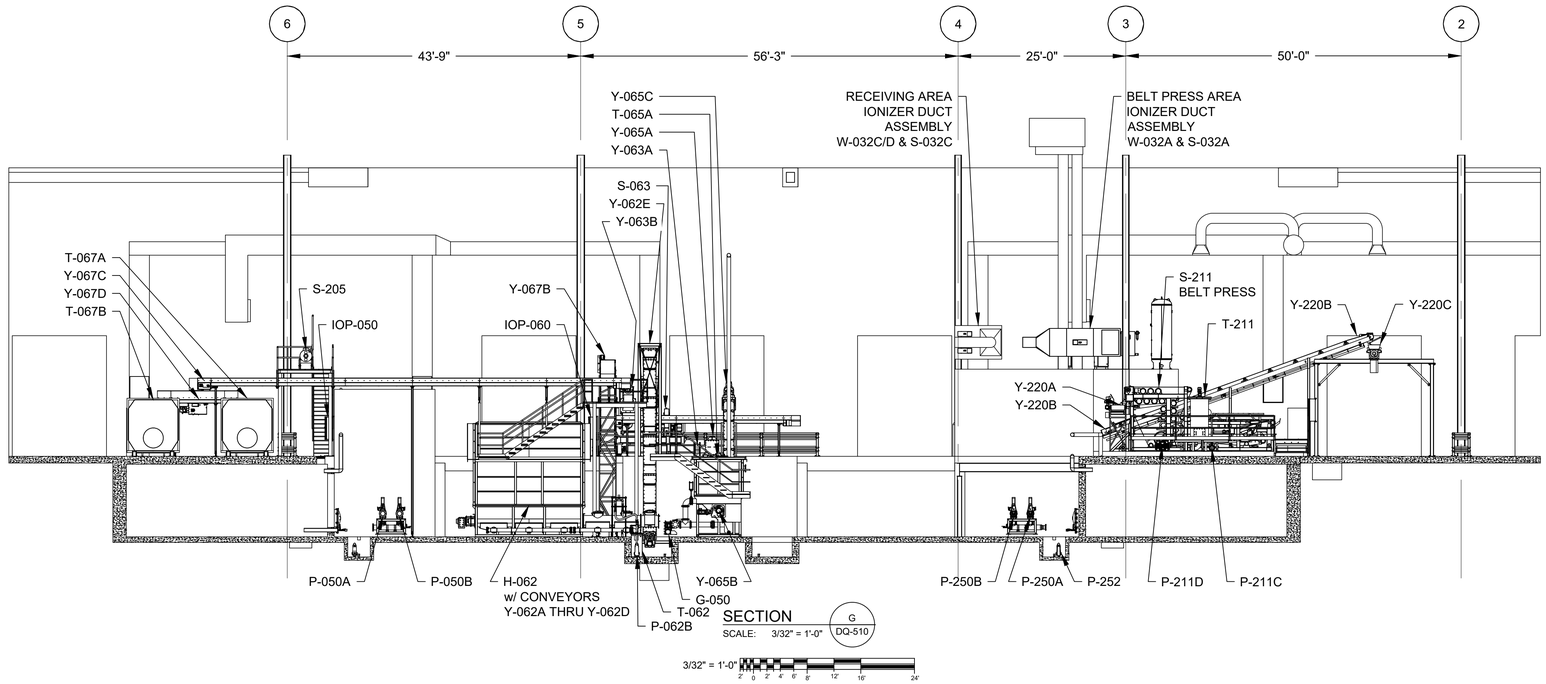

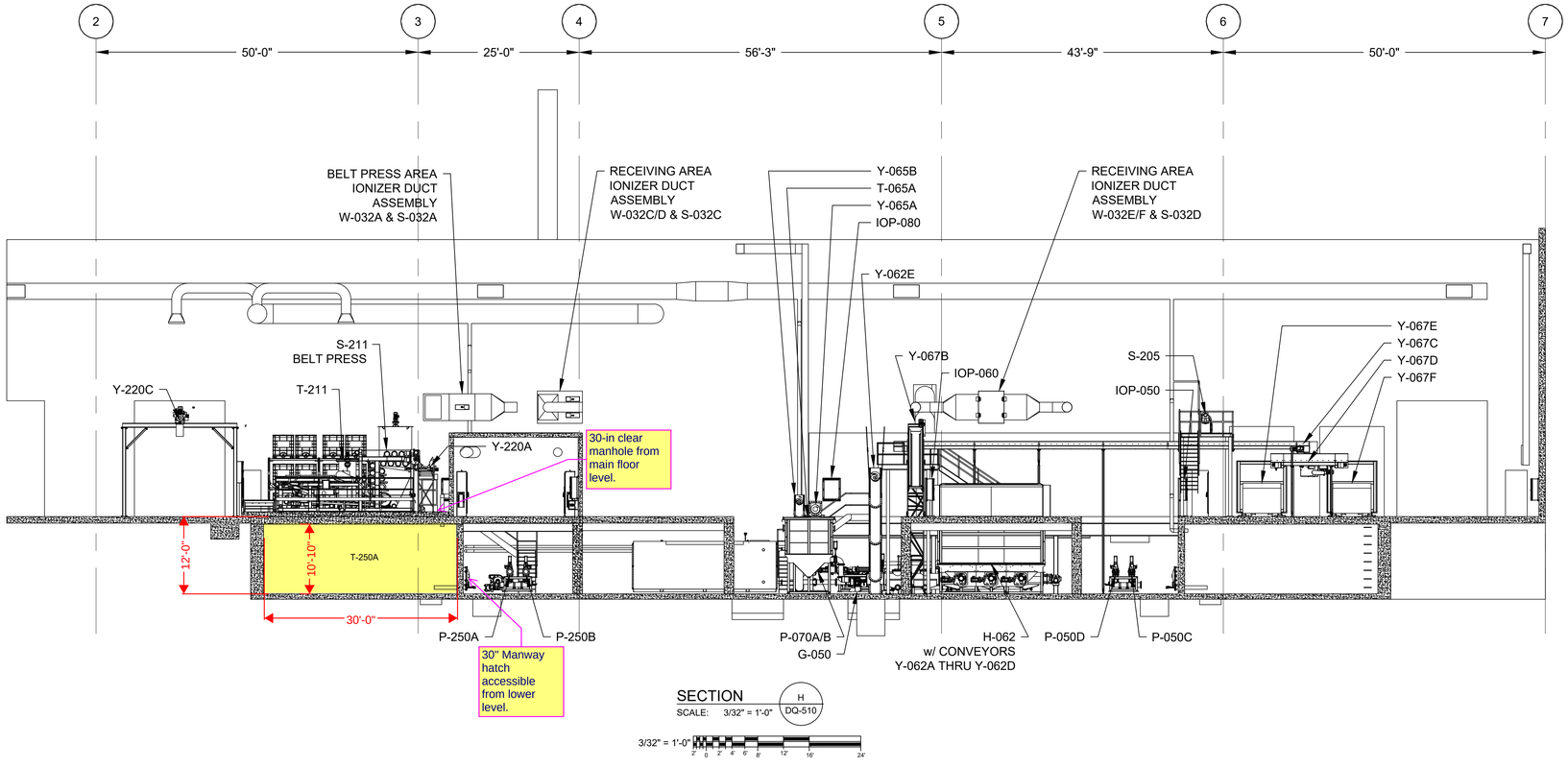

NO.	DATE
BY	
REVISION	
NO.	DATE
BY	
REVISION	
NO. 1	DATE 08/24/2021
BY BR	
REVISION RE-ISSUE WITH EQUIPMENT SUBMITTALS TO DATE	

ACEng
ADAMS & CHRISTENSEN ENGINEERING, INC.
782 WEXFORD CT.
GRAYSLAKE, ILLINOIS 60030
CERTIFICATE OF AUTHORIZATION NO. 05379

GREEN ARROW
2759 LONG ROAD
WOOSTER, OH 44691

THIS DRAWING CONTAINS VALUABLE INFORMATION, AND IS THE PROPRIETARY INFORMATION THAT BELONGS TO GREEN ARROW ("GA"), AND IS SUBJECT TO A CONFIDENTIALITY AND NONDISCLOSURE AGREEMENT. GA IS THE AUTHOR AND OWNER OF THIS DRAWING, AND RETAINS ALL COMMON LAW, STATUTORY AND OTHER RIGHTS, INCLUDING COPYRIGHTS. THE INFORMATION CONTAINED HEREIN MAY NOT AT ANY TIME BE USED FOR ANY UNAUTHORIZED PURPOSE, NOR REPRODUCED BY OR PROVIDED TO ANY THIRD PARTY, WITHOUT THE PRIOR WRITTEN CONSENT OF GA.

©2020, GREEN ARROW.
ALL RIGHTS RESERVED.

DIGESTER BUILDING
PROCESS EQUIPMENT
SECTIONS

GREEN ERA
650 W. 83RD ST.
CHICAGO, IL 60620

AREA	CHECKED BY NM
JOB NO. 1512	DRAWN BY BR
SCALE SEE NOTE	DATE 12/21/2020
DWG NO.	
SHEET NO. DQ-304	

Green Arrow\02 Projects\1512 Chicago - Feldman - Green Era\07 Drawings\04 Construction\Green Era Equipment Layout Sections.dwg

GREEN ARROW ENGINEERING	**Green Era** **Equipment Spec** **Flare(s)**	

F-370 Flare, waste biogas or off-spec RNG

REVISION LEVEL	DATE	DESCRIPTION	BY
R0	09/14/20	INITIAL RELEASE	NMAST
R1	08/23/21	REVISED FOR ENVIROTEC FLARE, FAII 1500 HP	NMAST

GREEN ARROW ENGINEERING

Green Era
Equipment Spec
Flare(s)

Section 1 - Basic Equip. Data		
1.0	Tag No.	F-370
1.1	Nom. Output	33.3 MMBTU/HR
1.2	Fuel A	Biogas
1.3	Fuel B	Off-spec RNG
1.4	Destruction	98% min. for VOCs. Mfg. to provide statement on destruction efficiency for air permitting.
1.5	Control for	PSA biogas separation system off-spec RNG/utility bypass. Digester tank/anaerobic system.
1.6	Type	Enclosed. No visible flame. Wind shroud should be insulated.

Section 2 – RNG property range for flare design, minimum capacity range						
	Description		*Min*	*Design*	*Max*	*Units*
3.0	HHV	Higher heating value	870	980	980	BTU/SCF
3.1	H2S	Hydrogen Sulfide	0	1	4	PPMV
3.2	T	Temperature	50	140	140	Deg. F
3.3	P	Supply Pressure, regulated	5	5	5	PSIG
3.4	Q	Thermal Output	4	18	20	MMBTU/h
3.5	V	Flow Rate	60	300	350	SCFM

Section 3 – Biogas property range for flare design, minimum capacity range						
	Description		*Min*	*Design*	*Max*	*Units*
3.0	HHV	Higher heating value	450	550	700	BTU/SCF
3.1	H2S	Hydrogen Sulfide	250	1000	1500	PPMV
3.2	T	Temperature	50	70	110	Deg. F
3.3	P	Supply Pressure	10	40	60	inWC
3.4	Q	Thermal Output	5.0	14.5	33.3 (mfg)	MMBTU/h
3.5	V	Flow Rate	150	440	880 (mfg)	SCFM

Section 4 – Pilot	
4.0	Electronic ignition of waste gas with confirmation of flame with UV sensor.
4.1	Supply 500,000 BTU/h natural gas between 2 and 3 PSIG for support gas if biogas HHV falls below 450 BTU/SCF. Gas will be blended into primary burner.

GREEN ARROW ENGINEERING	**Green Era Equipment Spec Flare(s)**	

Section 5 – Combustion Control		
5.0	PLC control	Require Allen-Bradley PLC (mgf. to state PLC family that will be used, ie CompactLogix xxx)
5.1	Operational status	Controller shall report status of combustion sequence
5.2	Read Access	Allow read access of all tags from plant SCADA
5.3	Alarms	Controller shall provide alarm outputs
5.4	Modulation	Minimum 5:1 turndown required. Blower on VFD.

Section 6 - Fuel Train Components	
6.0	Mfg. to provide component list with engineering submittals for valves and instruments, including ignition electrodes, regulators, flame arrestors, valve actuators, etc…

Section 7 - Biogas Blower Motor Data (separate supply from flare, see biogas blower skid (Blowers W-302A/B)					
7.0	Motor HP	15	7.1	Frame	TEFC
7.2	RPM	3450 @60 HZ	7.3	Voltage	3-ph 460
7.4	SF	1.15	7.5	Duty	Continuous
7.6	Washdown	-	7.7	X-proof	Location dependent
7.8	VFD	Yes			

Section 8 - Dimensions (mfg to confirm) attach drawing					
8.0	Base Width	46 inches	8.1	Base Length	46 inches
8.2	Burner height above grade	36 inches	8.3	Stack elev. (top)	21.5 feet
8.4	Stack dia.	56.3 inches	8.5	Weight	2200 lbs

Section 9 - Materials of Construction					
9.0	Base/frame	304SS or Hot Dipped Galv.	9.1	Biogas pipe	304SS
9.2	Burner	304SS	9.3	Stack	304SS

Section 10 - Documentation	
10.0	Electronic submittals for O&M and drawings, PDF format. Printed set of electrical schematic drawings (11x17) to ship with unit for installer use, laminated copies or in binder. No hard copy of the O&M is required.

A-A (1 : 15)

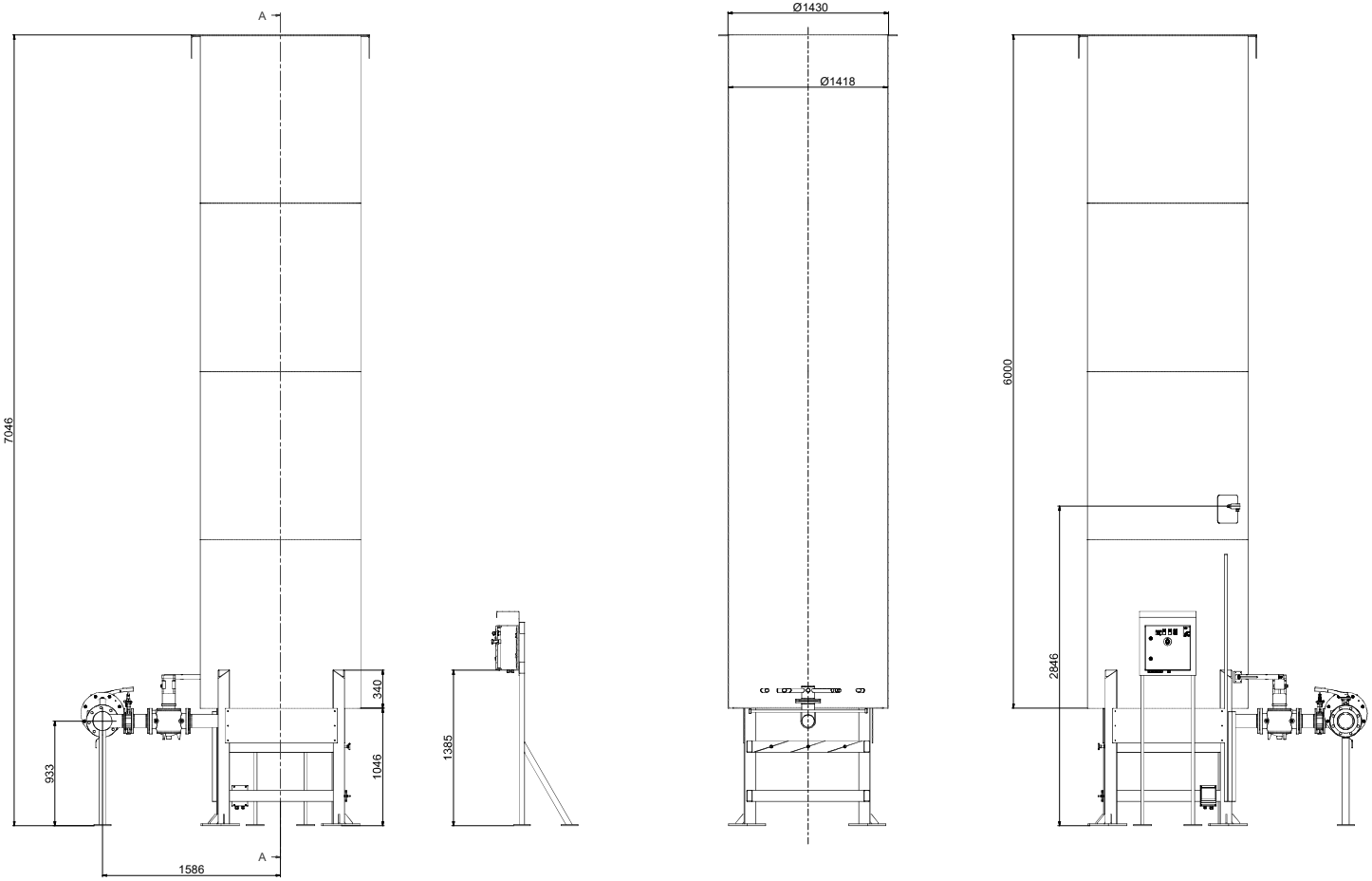

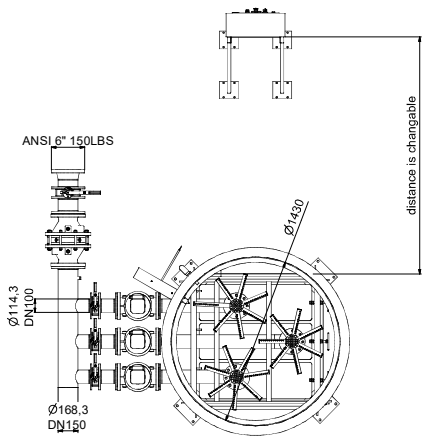

technische Änderungen vorbehalten /
technical changes reserved

Index	Änderung / Revision	Name / Name	Datum / Date
E			
D			
C			
B			
A			

Allgemeintoleranz ISO 2768 - m
General tolerance ISO 2768 - m

Form und Lagetoleranzen DIN ISO 1101 / Geometrical tolerance DIN ISO 1101

Oberflächenangaben DIN ISO 1302 / Surface specification DIN ISO 1302

	gezeichnet / designed	gepr. / checked	Freigabe / released
Datum / Date	31.08.2012		
Name / Name	NP		

Drehteile / turned parts | Objekttyp / Type | Firma/Company

Bilgeri EnviroTec GmbH

Maße / Mass | Maßstab / Scale

— kg | 1:15

Projekt / Project: Harvester Power

Projekt Nr / Project No.: SGO-47-02

Ersetzt durch / replaced by: —

Ersetzt für / replacement for: —

Bezeichnung 1,2 / Title 1,2: Gas flare FAll1500

Biogasfackel

Ident-Nr. / Identity Number: FAll1500hp_Fackel_Komplett

Revision / Revision: ****

Beila. / Dimensions: mm

www.envirotec.at

Copyright 2012

A0

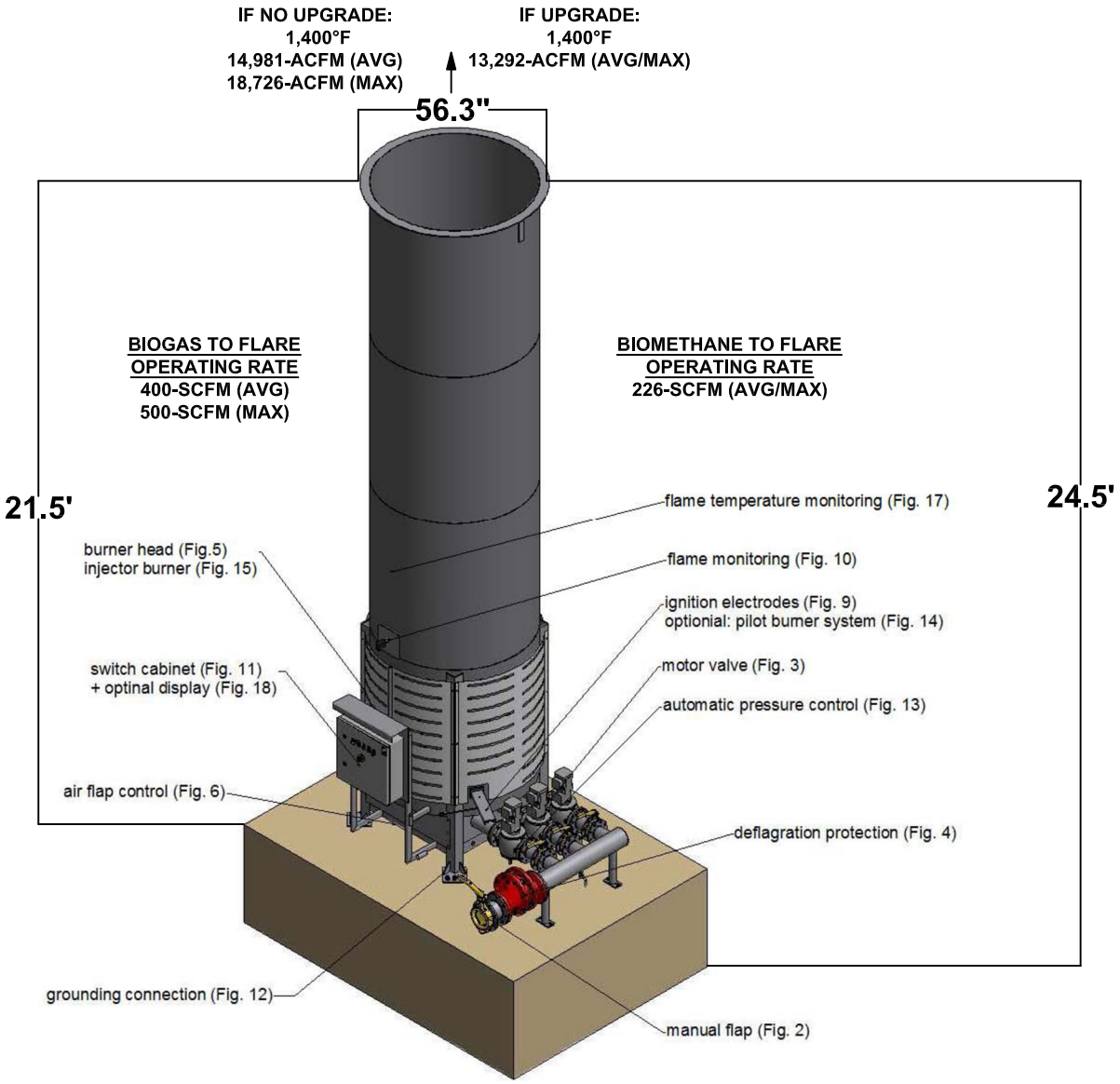

Fig. 1: EnvironTec Flare FA II – Overall View

LEGEND

NOTE:
SCHEMATIC IS SUPPLIED BY THE MANUFACTURER

CAD FILE: 7741–07A
REVISED: 10/08/21

DAI ENVIRONMENTAL

GREEN ERA RENEWABLE ENERGY AND URBAN FARMING CAMPUS
650 WEST 83RD STREET
CHICAGO, ILLINOIS

FLARE (F-370) SCHEMATIC
MANUFACTURER: Bilgeri EnvironTec GmbH FAII
MODEL: FAII 1500hp

GREEN ARROW ENGINEERING	**Green Era** **Equipment Spec** **Thermal Oxidizer**	

F-310 Thermal Oxidizer for lean tail gas from PSA system

REVISION LEVEL	DATE	DESCRIPTION	BY
R0	09/14/20	INITIAL RELEASE	NMAST

GREEN ARROW ENGINEERING	**Green Era** **Equipment Spec** **Thermal Oxidizer**	

Section 1 - Basic Equip. Data		
1.0	Tag No.	F-310
1.1	Nom. Output	1.5 MMBTU/HR
1.2	Fuel	Lean tail gas with Natural Gas for support
1.3	Destruction	98% min. for VOCs. Mfg. to provide statement on destruction efficiency for air permitting.
1.4	Control for	PSA biogas separation system tail gas. Tail gas contains methane slip, H2S, and trace separated VOCs

Section 2 – Tail Gas Flow from PSA Unit – from mfg.							
	Case	Feed Flow, scfm	Feed C1%	Waste Flow, scfm	Waste C1%	Waste BTU/SCF	BTU/h
2.0	(start-up & 55% C1 feed)	96.5	55%	43	11.06%	112	288,960
2.1	(start-up & 70% C1 feed)	96.5	70%	30	19.65%	198	356,400
2.2	(full flow & 55% C1 feed)	386	55%	172	11.06%	112	1,155,840
2.3	(full flow & 70% C1 feed)	386	70%	120	19.65%	198	1,425,600

Section 3 – Tail Gas property range for TOX design, minimum capacity range						
	Description		*Min*	*Design*	*Max*	*Units*
3.0	HHV	Higher heating value	100	150	200	BTU/SCF
3.1	H2S	Hydrogen Sulfide	750	3,000	4,500	PPMV
3.2	T	Temperature	70	140	150	Deg. F
3.3	P	Supply Pressure	1	2	5	PSI
3.4	Q	Thermal Output	275,000	1,300,000	1,500,000	BTU/h
3.5	V	Flow Rate	30	150	180	SCFM

Section 4 – TOX support gas (confirm with TOX mfg)			
4.0	Supply pressure to TOX	5	PSIG
4.1	NG consumption for 112 BTU/SCF gas, case 2.2	400,000	BTU/h
4.2	NG consumption for 198 BTU/SCF gas, case 2.3	None	BTU/h

Section 5 – Combustion Control		
5.0	PLC control	Require Allen-Bradley PLC (mgf. to state PLC family that will be used, ie CompactLogix xxx)
5.1	Operational status	Controller shall report status of combustion sequence
5.2	Read Access	Allow read access of all tags from plant SCADA
5.3	Alarms	Controller shall provide alarm outputs

Section 6 - Fuel Train Components	
6.0	Mfg. to provide component list with engineering submittals for valves and instruments, including ignition electrodes, regulators, flame arrestors, valve actuators, etc…

Section 7 - Blower Motor Data (confirm with mfg)					
7.0	Motor HP	2	7.1	Frame	TEFC
7.2	RPM	3450	7.3	Voltage	3-ph 460
7.4	SF	1.15	7.5	Duty	Continuous
7.6	Washdown	-	7.7	X-proof	-

Section 8 - Documentation	
8.0	Electronic submittals for O&M and drawings, PDF format. Printed set of electrical schematic drawings (11x17) to ship with unit for installer use, laminated copies or in binder. No hard copy of the O&M is required.

REVISIONS				
ZONE	REV	DESCRIPTION	BY	DATE
	1	REMOVED BLOWER, SHORTENED SKID	TZ	7/29/21

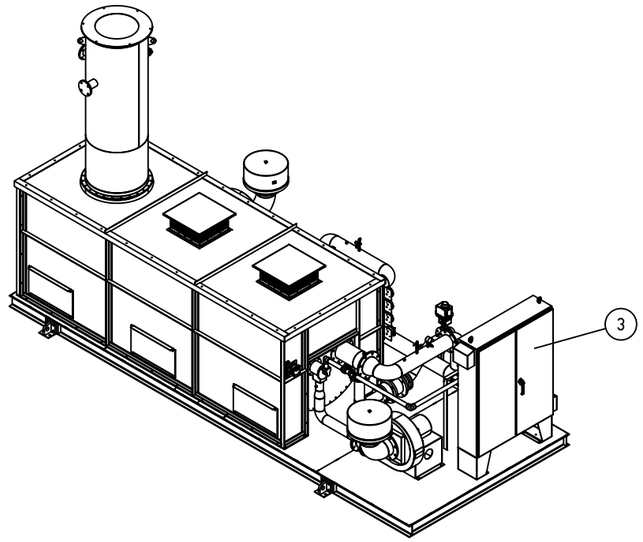

ITEM	DESCRIPTION
1	COMBUSTION AIR BLOWER
2	TERTIARY BLOWER
3	CONTROL PANEL
4	EXHAUST STACK
5	1.5" FUEL TRAIN
6	4" PROCESS INLET
7	(2) 3" SAMPLE PORTS

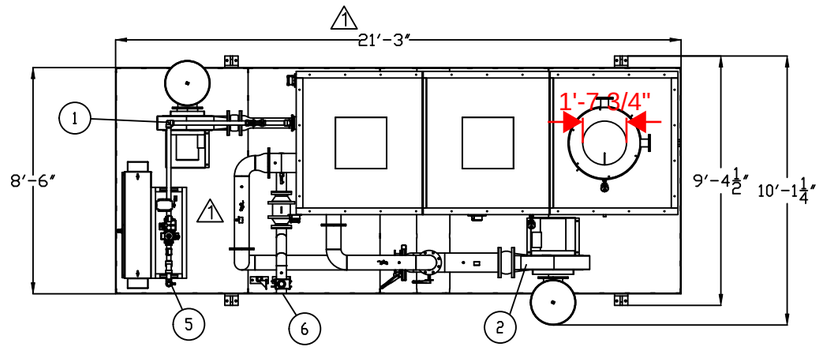

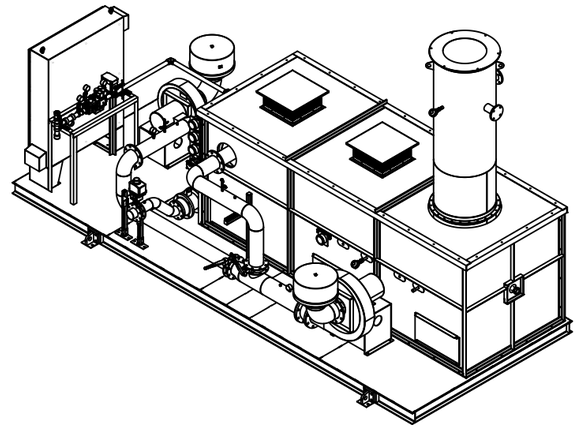

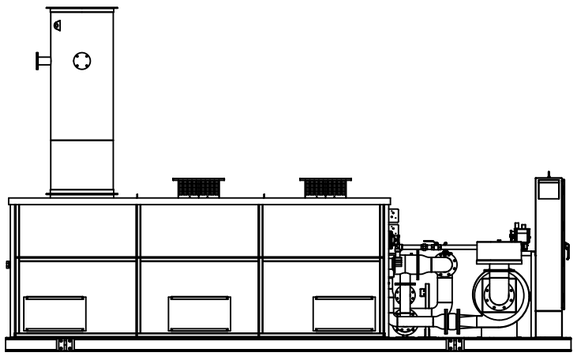

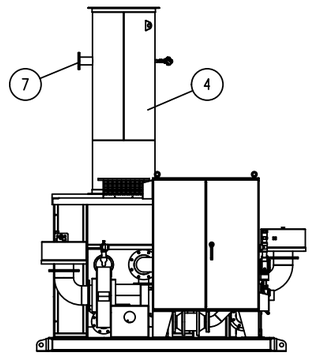

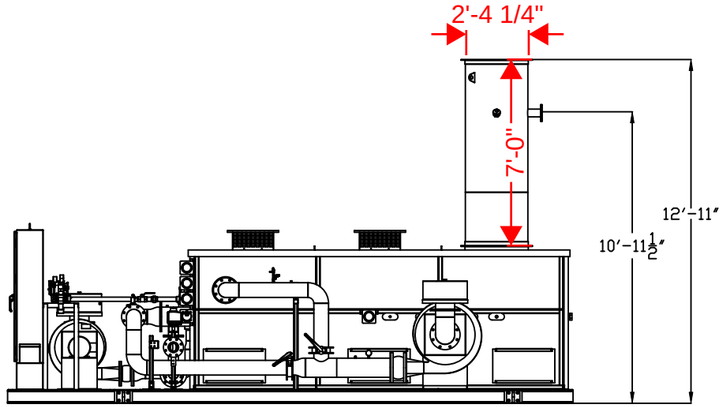

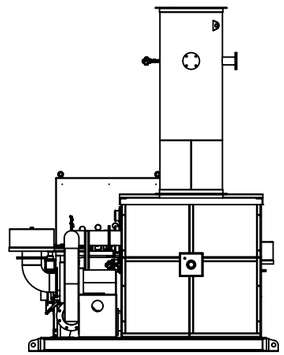

APPROX WEIGHT: 10,200 LBS

APPROVED
BY: NED MAST 08/23/2021

PROPRIETARY AND CONFIDENTIAL
THE INFORMATION CONTAINED IN THIS DRAWING IS THE SOLE PROPERTY OF CATALYTIC PRODUCTS INTERNATIONAL, INC. ANY REPRODUCTION IN PART OR AS A WHOLE WITHOUT THE WRITTEN PERMISSION OF CATALYTIC PRODUCTS INTERNATIONAL, IS PROHIBITED

Catalytic Products INTERNATIONAL

UNLESS OTHERWISE SPECIFIED		DATE	NAME
DIMENSIONS ARE IN INCHES TOLERANCES FRACTIONAL ± 1/16 ANGULAR MACH± 1° BEND ± 1° TWO PLACE DECIMAL ± 0.01 THREE PLACE DECIMAL ± 0.001	DRAWN	07/06/21	TKZ
	CHECKED	07/06/21	GF
DO NOT SCALE DRAWING	CUSTOMER: GREEN ERA		
	PROJECT NO. 21/11502		

TITLE:
QUADRANT NR 2.0
GENERAL ARRANGEMENT

SIZE	DWG. NO.	REV.
	21-11502-300	1
SCALE: NA	SHEET: 1 OF 1	

		CASE:	Full Flow @ 55% C1 Feed	Full Flow @ 70% C1 Feed	Min - 1 Skid @ Start up	Max - 2 Skids @ Full Flow
STREAM 1 - CLIENT PROCESS						
FLOW	SCFM		344	240	30	400
PRESSURE	"WCG		814	814	407	2035
TEMPERATURE	F		150	150	150	150
COMPOSITION	% VOL					
CO2			88.64%	80.05%	89.93%	79.55%
CH4			11.06%	19.65%	10.00%	20.00%
H2S			0.30%	0.30%	0.08%	0.45%
MASS	# / HR					
CO2			2,087	1,315	185	2,178
CH4			95	118	7	200
H2S			5	4	0	10
STREAM 2 - NATURAL GAS (AS NEEDED)						
FLOW	SCFM		28.5	0.0	5.8	0.0
PRESSURE	"WCG		1,628	1,628	1,628	1,628
TEMPERATURE	F		70	70	70	70
COMPOSITION	% VOL					
CH4			100.00%	100.00%	100.00%	100.00%
MASS	# / HR					
CH4			71	0	15	0
STREAM 3 - COMBUSTION AIR FOR NATURAL GAS BURNER						
FLOW	SCFM		168	0	34	0
PRESSURE	"WCG		436.70	408.46	410.51	408.40
TEMPERATURE	F		70	70	70	70
COMPOSITION	% VOL					
N2			79.10%	79.10%	79.10%	79.10%
O2			20.90%	20.90%	20.90%	20.90%
MASS	# / HR					
N2			408	0	84	0
O2			369	0	75	0
STREAM 4 - DILUTION AIR (FOR TEMPERATURE CONTROL AND VOC OXIDATION)						
FLOW	SCFM		368	685	30	1195
PRESSURE	"WCG		436.70	408.46	410.51	408.40
TEMPERATURE	F		70	70	70	70
COMPOSITION	% VOL					
N2			79.10%	79.10%	79.10%	79.10%
O2			20.90%	20.90%	20.90%	20.90%
MASS	# / HR					
N2			1,269	2,362	103	4,121
O2			383	712	31	1,243
STREAM 5 - EXHAUST (BASED ON MINIMUM DESTRUCTION/REMOVAL EFFICIENCY [DRE] OF 99.0%) 2						
FLOW	SCFM		974	972	109	1,674
PRESSURE	"WCG		0	0	0	0
TEMPERATURE	F		1,450	1,450	1,450	1,450
COMPOSITION	% VOL					
CO2	% VOL		44.96%	29.45%	40.93%	28.56%
N2	% VOL		39.46%	55.74%	39.36%	56.43%
O2	% VOL		1.76%	5.01%	3.48%	5.29%
H2O	% VOL		13.68%	9.68%	16.17%	9.56%
CH4	PPMV		391	486	276	478
SO2	PPMV		1,049	734	205	1,064
NOx (As NO2)	PPMV		10	<10	18	<10
CO	PPMV		16	<10	28	<10
MASS	# / HR					
CO2			3,000	1,959	305	3,274
N2			1,677	2,362	187	4,121
O2			85	242	19	441
H2O			374	264	49	449
CH4			1	1	0	2
SO2			10	7	0	18
NOx (As NO2)			0	0	0	0
CO			0	0	0	0

NOTES:

1 NOx is based on a burner manfacturer emissions rate of 0.04 lb / MMBtu. Any Nitrogen in the client process, other than N2, will increase this value.

2 CO is based on a burner manufacturer emissions rate of 0.038 lb CO / MMBtu.

3 Perfomance is contingent on operation of the system per CPI's operation and maintenance manual.

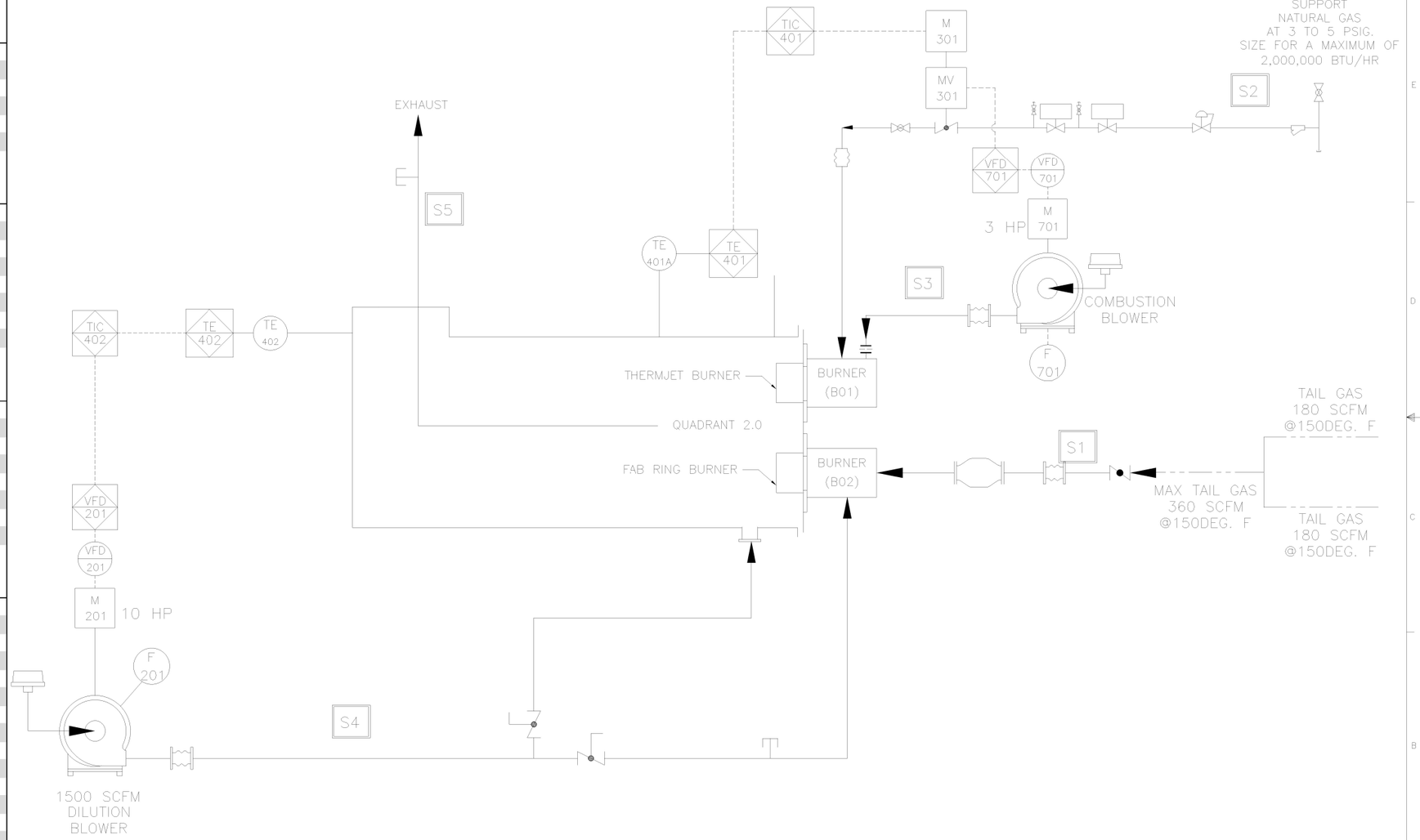

REVISIONS				
ZONE	REV.	DESCRIPTION	BY	DATE
F8-A6	1	CUST. CRCTNS, ADD: #/HR, NOX, CO, FIX CASE A AIRFLOW	PTH	9/21/21
F8-A6	2	PER CUST. COMMENTS	PTH	9/29/21

PROPRIETARY AND CONFIDENTIAL
THE INFORMATION CONTAINED IN THIS DRAWING IS THE SOLE PROPERTY OF CATALYTIC PRODUCTS INTL. ANY REPRODUCTION IN PART OR AS A WHOLE WITHOUT THE WRITTEN PERMISSION OF CATALYTIC PRODUCTS INTL. IS PROHIBITED.

Catalytic Products INTERNATIONAL

UNLESS OTHERWISE SPECIFIED:
DIMENSIONS ARE IN INCHES
TOLERANCES:
FRACTIONAL ± 1/16
ANGULAR: MACH ± 1° BEND ± 1°
TWO PLACE DECIMAL ± 0.01
THREE PLACE DECIMAL ± 0.001
DO NOT SCALE DRAWING

	DATE	NAME
DRAWN	09/10/21	PTH
CHECKED		

CUSTOMER: GREEN ERA
PROJECT NO. 21/11502

TITLE: QUADRANT NR 2.0 PROCESS FLOW DIAGRAM

SIZE | DWG. NO. 21-11502-390 | REV. 2
SCALE: NA | SHEET: 1 OF 1

		CASE:	Full Flow @ 55% C1 Feed	Full Flow @ 70% C1 Feed	Min - 1 Skid @ Start up	Max - 2 Skids @ Full Flow
STREAM 1 - CLIENT PROCESS						
FLOW	SCFM		344	240	30	400
PRESSURE	"WCG		814	814	407	2035
TEMPERATURE	F		150	150	150	150
COMPOSITION	% VOL					
CO2			88.64%	80.05%	89.93%	79.55%
CH4			11.06%	19.65%	10.00%	20.00%
H2S			0.30%	0.30%	0.08%	0.45%
MASS	# / HR					
CO2			2,087	1,315	185	2,178
CH4			95	118	7	200
H2S			5	4	0	10
STREAM 2 - NATURAL GAS (AS NEEDED)						
FLOW	SCFM		28.5	0.0	5.8	0.0
PRESSURE	"WCG		1,628	1,628	1,628	1,628
TEMPERATURE	F		70	70	70	70
COMPOSITION	% VOL					
CH4			100.00%	100.00%	100.00%	100.00%
MASS	# / HR					
CH4			71	0	15	0
STREAM 3 - COMBUSTION AIR FOR NATURAL GAS BURNER						
FLOW	SCFM		168	0	34	0
PRESSURE	"WCG		436.70	408.46	410.51	408.40
TEMPERATURE	F		70	70	70	70
COMPOSITION	% VOL					
N2			79.10%	79.10%	79.10%	79.10%
O2			20.90%	20.90%	20.90%	20.90%
MASS	# / HR					
N2			408	0	84	0
O2			369	0	75	0
STREAM 4 - DILUTION AIR (FOR TEMPERATURE CONTROL AND VOC OXIDATION)						
FLOW	SCFM		368	685	30	1195
PRESSURE	"WCG		436.70	408.46	410.51	408.40
TEMPERATURE	F		70	70	70	70
COMPOSITION	% VOL					
N2			79.10%	79.10%	79.10%	79.10%
O2			20.90%	20.90%	20.90%	20.90%
MASS	# / HR					
N2			1,269	2,362	103	4,121
O2			383	712	31	1,243
STREAM 5 - EXHAUST (BASED ON MINIMUM DESTRUCTION/REMOVAL EFFICIENCY [DRE] OF 99.0%) 2						
FLOW	SCFM		974	972	109	1,674
PRESSURE	"WCG		0	0	0	0
TEMPERATURE	F		1,450	1,450	1,450	1,450
COMPOSITION	% VOL					
CO2	% VOL		44.96%	29.45%	40.93%	28.56%
N2	% VOL		39.46%	55.74%	39.36%	56.43%
O2	% VOL		1.76%	5.01%	3.48%	5.29%
H2O	% VOL		13.68%	9.68%	16.17%	9.56%
CH4	PPMV		391	486	276	478
SO2	PPMV		1,049	734	205	1,064
NOx (As NO2)	PPMV		10	<10	18	<10
CO	PPMV		16	<10	28	<10
MASS	# / HR					
CO2			3,000	1,959	305	3,274
N2			1,677	2,362	187	4,121
O2			85	242	19	441
H2O			374	264	49	449
CH4			1	1	0	2
SO2			10	7	0	18
NOx (As NO2)			0	0	0	0
CO			0	0	0	0

NOTES:

1 NOx is based on a burner manfacturer emissions rate of 0.04 lb / MMBtu. Any Nitrogen in the client process, other than N2, will increase this value.

2 CO is based on a burner manufacturer emissions rate of 0.038 lb CO / MMBtu.

3 Perfomance is contingent on operation of the system per CPI's operation and maintenance manual.

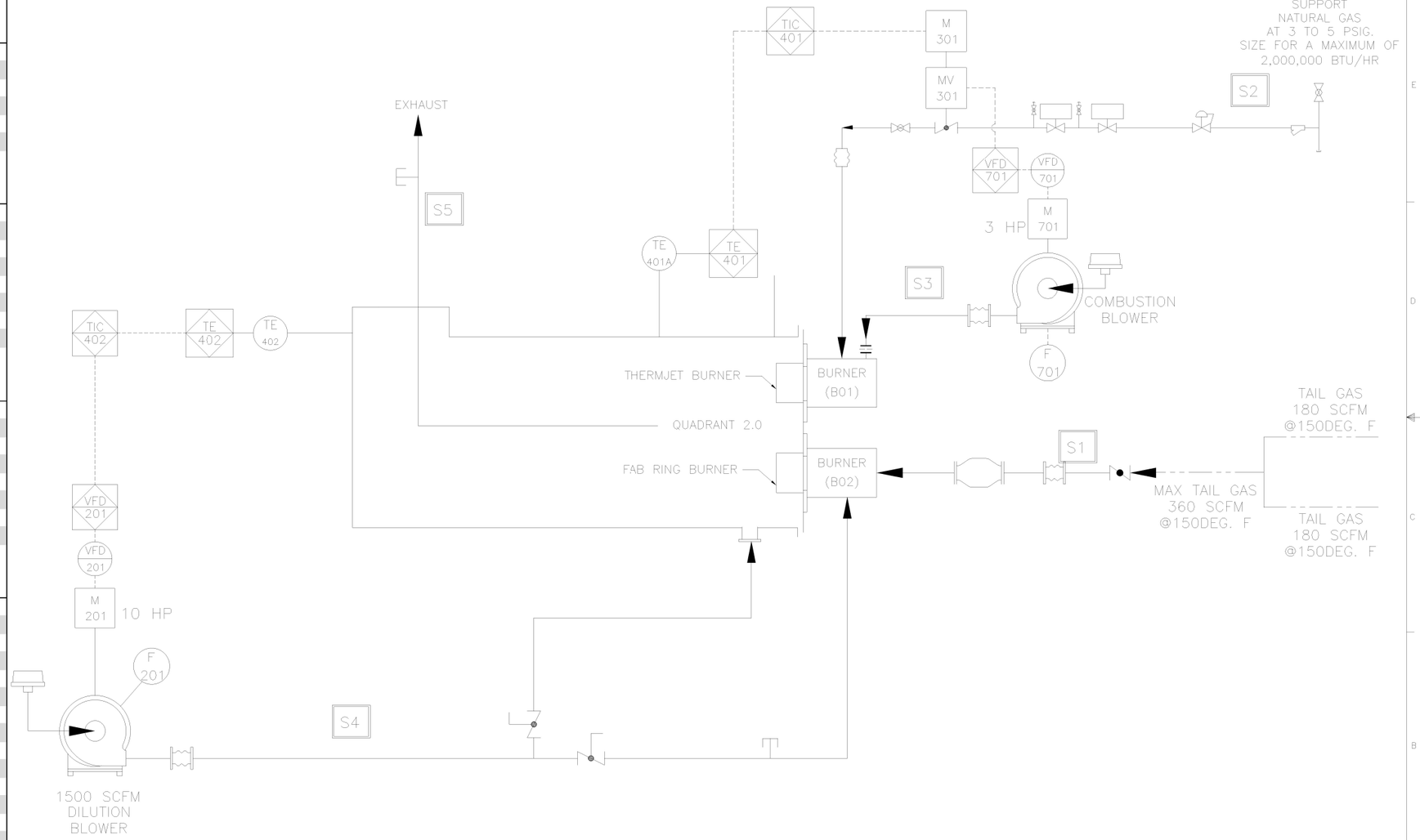

REVISIONS				
ZONE	REV.	DESCRIPTION	BY	DATE
F8-A6	1	CUST. CRCTNS, ADD: #/HR, NOX, CO, FIX CASE A AIRFLOW	PTH	9/21/21
F8-A6	2	PER CUST. COMMENTS	PTH	9/29/21

PROPRIETARY AND CONFIDENTIAL
THE INFORMATION CONTAINED IN THIS DRAWING IS THE SOLE PROPERTY OF CATALYTIC PRODUCTS INTL. ANY REPRODUCTION IN PART OR AS A WHOLE WITHOUT THE WRITTEN PERMISSION OF CATALYTIC PRODUCTS INTL. IS PROHIBITED.

Catalytic Products INTERNATIONAL

UNLESS OTHERWISE SPECIFIED:
DIMENSIONS ARE IN INCHES
TOLERANCES:
FRACTIONAL ± 1/16
ANGULAR: MACH ± 1° BEND ± 1°
TWO PLACE DECIMAL ± 0.01
THREE PLACE DECIMAL ± 0.001
DO NOT SCALE DRAWING

	DATE	NAME
DRAWN	09/10/21	PTH
CHECKED		

CUSTOMER: GREEN ERA
PROJECT NO. 21/11502

TITLE: QUADRANT NR 2.0 PROCESS FLOW DIAGRAM

SIZE | DWG. NO. 21-11502-390 | REV. 2
SCALE: NA | SHEET: 1 OF 1

ITEM	DESCRIPTION
1	COMBUSTION AIR BLOWER
2	TERTIARY BLOWER
3	CONTROL PANEL
4	EXHAUST STACK
5	1.5" FUEL TRAIN
6	4" PROCESS INLET
7	(2) 3" SAMPLE PORTS

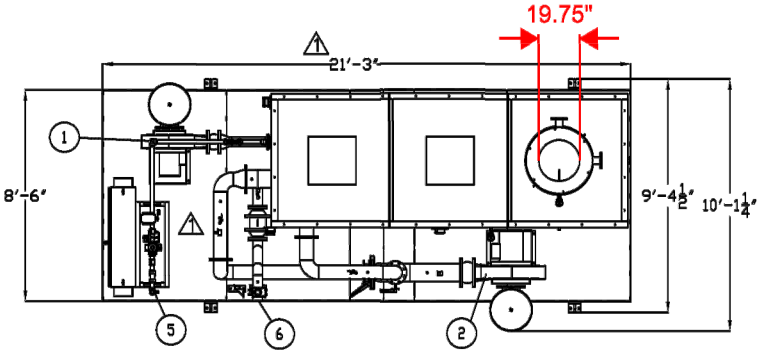

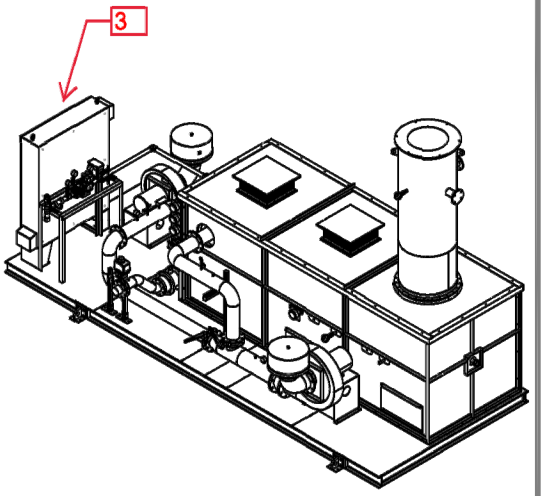

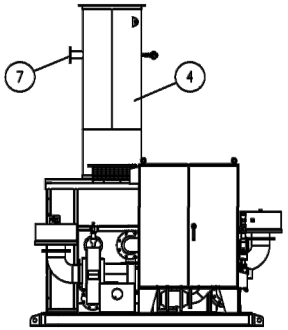

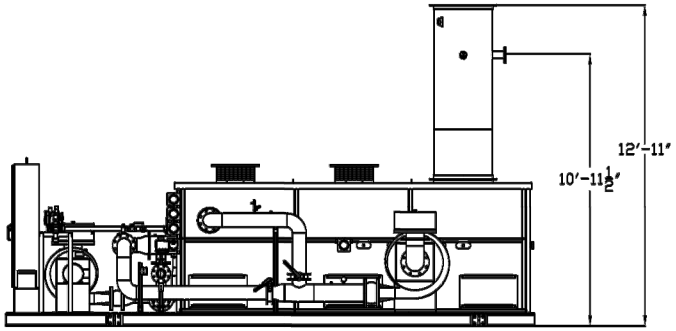

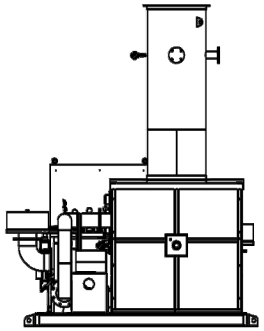

LEGEND

NOTE: SCHEMATIC IS SUPPLIED BY THE MANUFACTURER

CAD FILE: 7741-08A

REVISED: 10/08/21

ENVIRONMENTAL DAI

GREEN ERA RENEWABLE ENERGY AND URBAN FARMING CAMPUS
650 WEST 83RD STREET
CHICAGO, ILLINOIS

THERMAL OXIDIZER (F330) SCHEMATIC
MANUFACTURER: Catalytic Products International
MODEL: QUADRANT NR 2.0

Wackerbauer
Maschinenbau
Innovations for Machines

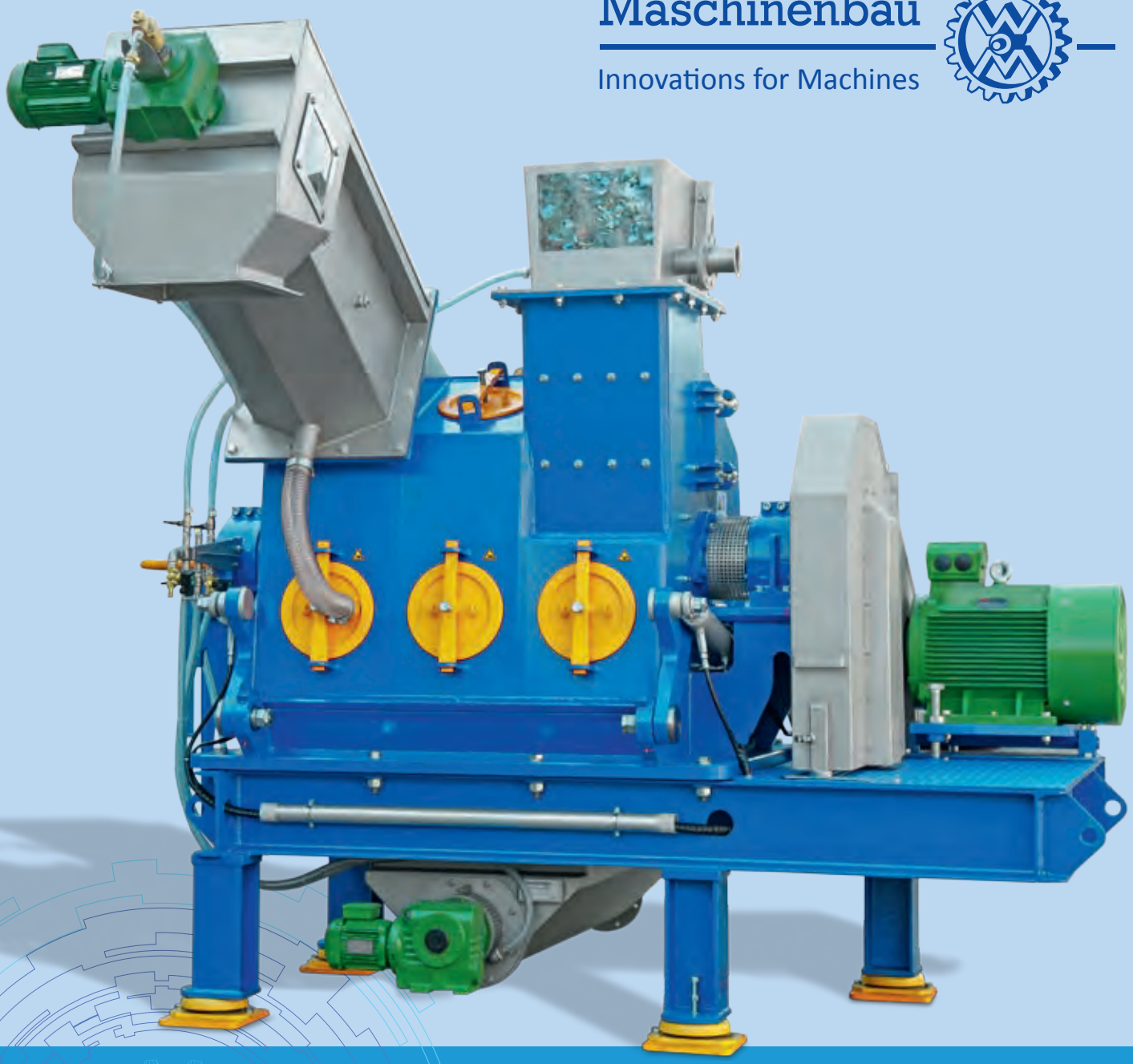

The Original Machine Separation Mill TM 75

for the milling and separation of biological waste

The Innovative Solution for the Profitable Recycling of Biological Waste:

Separation Mill TM 75

for the milling and separation of biological waste and packaging material for the further treatment in biogas plants

Flexible and cost-effective

- Universal treatment of all kinds of waste
- Varying densities of the materials facilitate precise separation and discharge
- High throughput capacity thanks to an ideal proportion between the number of hammers and the screen surface
- Up to 20 m³/h biological waste depending on the feed material
- Continuous operation
- Robust against undesired material such as wood, metal and glass
- Long-lasting technology and low costs for spare parts

Robust and efficient

- Engine power 75 – 90 kW
- Grinding width 1,500 mm
- Weight 9,500 kg
- Dimensions (L x W x H) 3.5 m x 4.0 m x 3.5 m
- Several connecting options
- Easy cleaning thanks to hydraulic opening mechanism
- PLC control
- Robust welded construction
- Automatic and manual operation
- Independent water supply

The Original Machine

Honoured with the Bavarian State Award for Innovation 2013

Wackerbauer
Maschinenbau
Innovations for Machines

Biological waste

- Municipal organic waste, household organic waste, expired food, market waste, organic waste of the food production

Contaminants

- Separation of packaging materials (plastic, foil, composite material)
- Milled and separated material can be recycled

Substrate

- Biomass milled to the grain size of 10 mm as required by law
- Further treatment of the substrate in the hygienisation process and/or in the biogas plant

Wackerbauer Maschinenbau

Innovations for Machines

Consultation – Construction – Production – Assembly – Commissioning – Service

Wackerbauer Maschinenbau GmbH is a traditional family-owned company in the Upper Bavarian town Ampfing in the east of Munich.

The range of services extends from the professional consultation to the design and construction of high-quality precision machines and machine parts, which are tailored to meet the individual requirements of our customers.

Our qualified and experienced staff is familiar with up-to-date construction and production methods and realises the highest quality standards in various fields of production, such as process end environmental engineering, hydroelectric installations, hammer mills, machines for special purposes, packing and unpacking technologies, special vehicles, repair and maintenance and helicopter ground support equipment.

Numerous certificates authorise us to carry our special tasks, for example in projects with particular safety requirements.

The path of biological waste to the biogas plant

Our product portfolio in the field of recycling of biological waste ranges from the separation mill as an individual machine to the design of a complete system including conveyors and reception troughs.

Gestaltung: www.kommaweb.de • 06-2013

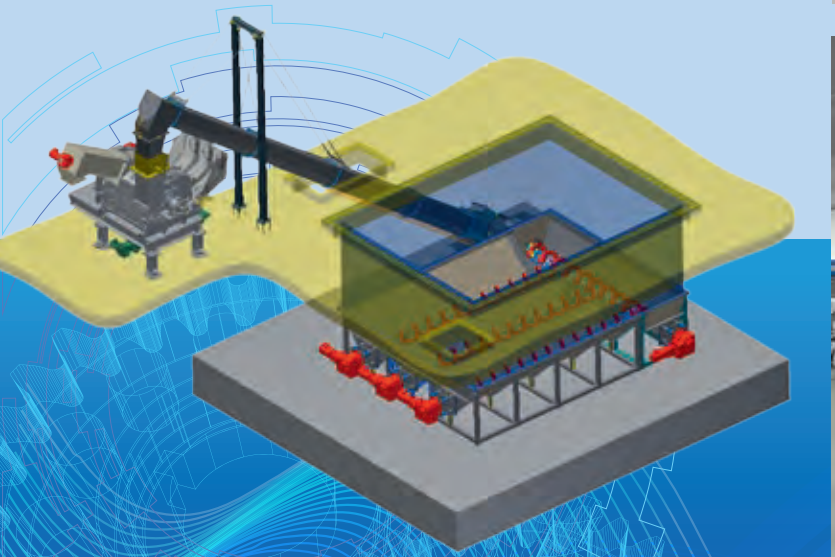

Wackerbauer Maschinenbau GmbH
Wernher-von-Braun-Straße 7
84539 Ampfing – Germany

Phone: +49 8636 9838-0
Fax: +49 8636 9838-38

www.wackerbauer.net
info@wackerbauer.net

ATTACHMENT 11
CITY OF CHICAGO DEPARTMENT OF BUILDINGS
STORMWATER DESIGN APPROVAL AND CALCULATIONS

DEPARTMENT OF BUILDINGS

CITY OF CHICAGO

DATE: 3/5/2020

TO: Jamil Bou-Saab, PE, Terra Engineering, Ltd.

FROM: Andrew Billing, PE, Lead Reviewer

SUBJECT: Approval of Design Plans, dated: **2/18/2020**

Project Name: **Green Era Digester**
Project Address: **650 W 83rd St**
Tracking Number: **100854184**

The Stormwater Management Section of the Department of Buildings has reviewed and approved the above referenced project for compliance with *CDOT Street and Site Plan Design Standards* (April 2007) and *CDOT Rules and Regulations for Construction in the Public Way* (January 2016) including Appendix B *CDOT ADA Standards* (latest revision).

Originated by: **Benjamin Stammis, PE, V3 Companies, Consultant Reviewer**

cc-Designer: **Bill Higgins, Project Manager, Board of Local Improvements, Superintendent of Special Assessments, Chicago Department of Transportation, Division of Project Development**

DEPARTMENT OF BUILDINGS

CITY OF CHICAGO

DATE: 3/5/2020

TO: Patrick Maloney, PE, Assistant Chief Engineer

FROM: Andrew Billing, PE, Lead Stormwater Reviewer

SUBJECT: Approval of Design Plans, dated: **2/18/2020**

Project Name: **Green Era Digester**
Project Address: **650 W 83rd St**
Tracking Number: **100854184**
Designer/Developer: **Terra Engineering, Ltd.**

☒ **Plan Approval.** The following size(s) of drain connection(s) to the main sewer(s) is/are acceptable for the subject property. Please check the plans for other permit requirements inside private property including covenants for joint maintenance.

☐ **Conditional Plan Approval.** The following size(s) of drain connection(s) to the main sewer(s) is/are acceptable for the subject property. However, the attached comments/mark-ups as noted **must** be incorporated into the final plans. Please verify that the plans have been revised as noted and check other permit requirements inside private property including covenants for joint maintenance.

Connection size and location:

One 8-inch storm connection to 45-inch sewer in 83rd St.
One 6-inch sanitary connection to 45-inch sewer in 83rd St.

Restrictor size and catch basin number and location:

One 5.5-inch diameter restrictor plate in CB-13.

Rate Control BMPs:

88,182 cubic feet is provided in a dry detention basin. 81,520 cubic feet is required.

Volume Control BMPs:

15% impervious area reduction is achieved with 154,709 square feet of pervious area.

Plan modifications described below (or shown on attached sheets) are required on the following sheet numbers:

Sheet(s) _____ _____

_____

Notes: _____

_____

_____

Stormwater Management Plan Review Fees:

The following stormwater review fee has been paid prior to this stormwater approval. (See Stormwater Ordinance, Article 11-18-080, for review fees.)

☐	$1,000.00	for regulated developments < 50,000 sq. ft.
☒	$3,000.00	for regulated developments >= 50,000 sq. ft.
☐	$1,500.00	for a variance request < 50,000 sq. ft.
☐	$4,500.00	for a variance request >= 50,000 sq. ft.
☐	$350.00	for a plan amendment submitted within one year of plan approval
☐	$500.00	for a plan amendment submitted over one year after plan approval
☐	No Fee Required, reason:	

Departmental requirements are subject to change. This record of approval is **valid for one year** from the date of issue indicated above. It is the designer's/developer's responsibility to field check the size, location, and invert elevation of existing sewers and other city-owned or private utilities prior to the start of construction.

Please be advised: this document is a stormwater design approval; **this is not a permit** to perform the work shown on the plans. The contractor must obtain all required permits prior to beginning construction including, but not limited to, the sewer permit, street opening permit, driveway permit, etc.

Originated by: **Benjamin Stammis, PE, V3 Companies, Stormwater Consultant**
cc-Designer: **Jamil Bou-Saab, PE, Terra Engineering**

PD Approval

Date: 12/20/19
Rev. Date:

City of Chicago
Department of Water Management

Stormwater Spreadsheet Tool

Release 4.0 effective May 15, 2017

1. DOB Tracking/Permit Number:

2. Name of Project:
Green Era Digester

3. Address of Site:
650 W. 83rd Street

Architect / Engineer of Record: Terra Engineering, Ltd.
Phone No.: 312-467-0123

4. Description of Proposed Work:
Industrial Buidling with Digester

5. Use of Building (if applicable):
Industrial

6. Sewer Atlas & Drain Atlas Referenced:
NW 1/4 Sec. 33 38-14

7. Area of Site:
387,902 square feet (Square Feet = Acres * 43560)
8.905 acres (Acres = Square Feet / 43560)

8. Chicago Sustainable Development Policy:

Does this project exceed the minimum requirements of the Stormwater Ordinance in order to comply with the Chicago Sustainable Develoment Policy?

No (Answer Yes or No)

This spreadsheet tool has been prepared to assist the applicant in preparing calculations for simple sites. The applicant is responsible for ensuring that submitted calculations are correct. If necessary, supporting hand calculations should be prepared and submitted.

Color Coding

- **Cell Contents Computed by Spreadsheet**
- **Cell for User Entry**
- **Cell Includes Comment (when cursor is over it)**

City of Chicago
Department of Water Management

Stormwater Spreadsheet Tool

INDEX OF SPREADSHEETS

Required>>	X	COVER
Required>>	X	INDEX
		0.0 RELEASE RATE
Required>>	X	1.0 RATE CONTROL
		1.1 Dry Weather Flow
		1.2 BMPs-Rate Control Credit
	X	1.3 Restrictor Sizing
Required>>	X	2.0 VOLUME CONTROL
		2.1 BMP Volume Summary
		2.1.1 Bioinfiltration
		2.1.2 Drainage Swales
		2.1.3 Green Roof
		2.1.4 Infiltration Vault
		2.1.5 Trees
		2.1.6 Permeable Pavement
		2.1.7.1 Roof Runoff BMPs - Planter Boxes
		2.1.7.2 Roof Runoff BMPs - Rain Barrels / Cisterns
		2.1.8 Filter Strips
		2.1.9 Oversized Detention
		3.0 SUSTAINABLE DEVELOPMENT POLICY
		3.1 Exceed Rate Control
		3.2 Exceed Volume Control

City of Chicago
Department of Water Management

Name of Project:	Green Era Digester
Address:	650 W. 83rd Street
A/E of Record:	Terra Engineering, Ltd.

0.0 Release Rate

Step 1: Sewer Capacity of Each Sewer Segment

Sewer Segment:	Segment 1	Segment 2	Segment 3	Segment 4	Segment 5	Segment 6
Street Name:						
Upstream End (street name):						
Downstream End (street name):						
Upstream Invert (ft):						
Downstream Invert (ft):						
Pipe Segment Length (ft):						
Pipe Slope (S):						
Pipe Characteristics:						
Pipe Size (in):						
Pipe Area (sq ft):	0.0000	0.0000	0.0000	0.0000	0.0000	0.0000
Wetted Perimeter (ft):	0.0000	0.0000	0.0000	0.0000	0.0000	0.0000
Hydraulic Radius (ft):						
Roughness Coefficient (n):						
Flow Conveyance (K):						
Manning's Equation:						
Velocity (fps):						
Hydraulic Capacity (cfs):						

Roughness Coefficient (n):
VCP: use 0.011, typical for pipe <= 21 in
RCP: use 0.013, for pipe >=24 in when pipe size shown on atlas in inches
brick sewer: use 0.015, for pipe >=24 in when pipe size shown on atlas in feet

Step 2: Tributary Area to Each Sewer Segment

	Segment 1			Segment 2		
Total Tributary Area (ac):		Adj. Factor	Adjusted Area		Adj. Factor	Adjusted Area
Residential Area (ac):	0.00	1.0	0.00	0.00	1.0	0.00
Commercial Area (ac):		1.3	0.00		1.3	0.00
Industrial Area (ac):		1.5	0.00		1.5	0.00
		Total Adjusted Area:	**0.00**		**Total Adjusted Area:**	**0.00**
	Segment 3			**Segment 4**		
Total Tributary Area (ac):		Adj. Factor	Adjusted Area		Adj. Factor	Adjusted Area
Residential Area (ac):	0.00	1.0	0.00	0.00	1.0	0.00
Commercial Area (ac):		1.3	0.00		1.3	0.00
Industrial Area (ac):		1.5	0.00		1.5	0.00
		Total Adjusted Area:	**0.00**		**Total Adjusted Area:**	**0.00**
	Segment 5			**Segment 6**		
Total Tributary Area (ac):		Adj. Factor	Adjusted Area		Adj. Factor	Adjusted Area
Residential Area (ac):	0.00	1.0	0.00	0.00	1.0	0.00
Commercial Area (ac):		1.3	0.00		1.3	0.00
Industrial Area (ac):		1.5	0.00		1.5	0.00
		Total Adjusted Area:	**0.00**		**Total Adjusted Area:**	**0.00**

Note: Total tributary areas entered for segments 1 through 6 must include the cumulative tributary area for each segment. All upstream tributary areas must be included.

Step 3: Determine Release Rates of Each Segment

	Segment 1	Segment 2	Segment 3	Segment 4	Segment 5	Segment 6
Release Rate (cfs/ac):						

Critical Local Sewer Capacity (cfs/ac): **0.00**

Step 4: Compare Outlet Sewer Capacity and Determine Release Rate

Name of Outlet Drainage Basin (as shown on the map): Raps General Tributary Area
Outlet Sewer Capacity (cfs/ac): **0.27**

Maximum Allowable Release Rate (cfs/ac): **0.27**

City of Chicago
Department of Water Management

Name of Project: Green Era Digester
Address: 650 W. 83rd Street
A/E of Record: Terra Engineering, Ltd.
Note: Proposed Areas contain both Phase 1 and Phase 2 of the project.

1.0 Rate Control (Sheet 1 of 2)

Step 1: **Runoff Calculation**

		Proposed Area (sq. ft.)	C-Value 100-Year	Storage Volume (cu. ft.)
Pervious Land	Lawns - Sandy soil, flat, 0% to 2%		0.18	
	Lawns - Sandy soil, avg, 2% to 7%		0.27	
	Lawns - Sandy soil, steep, >7%		0.36	
	Lawns - Heavy soil, flat, 0% to 2%		0.30	
	Lawns - Heavy soil, avg, 2% to 7%	154,709	0.42	
	Lawns - Heavy soil, steep, >7%		0.47	
	Woodlands, flat, 2%		0.39	
	Native Vegetation with prepared soils		0.10	
	Dry bottom basins to HWL	32,824	0.75	
	Wetland		0.80	
	Green Roof		0.50	
Impervious Land	Gravel	49,666	0.70	
	Pavement	104,329	0.95	
	Roofs (conventional)	46,374	0.95	
	Building sidewalls connected by side gutters (enter 25% of the face of the sidewall)		0.95	
	Wet bottom basins to HWL		1.00	
BMP areas	BMPs providing storage that WILL COUNT toward detention storage (from Worksheet 1.2)	0	1.00	
	BMPs providing volume control storage that WILL NOT BE COUNTED toward detention (from Worksheet 1.2)	0	Storage Provided will be used to factor the adjusted C-value in Cell D38	0

Summary	Total pervious area	187,533	sq ft		
	Total impervious area	200,369	sq ft		
	Total BMP area	0	sq ft		
	Total site area including sidewall	387,902	sq ft	8.91	acres
	Total site area excluding sidewall	387,902	sq ft	8.91	acres
	Weighted C- value (non BMP areas)	0.69	unitless		
	Adjusted C-value (accounts for BMPs)	0.00	unitless		
	Notes:	*Make note of any adjustments made for purposes of detention calcs here (such as removal of roof area that will discharge directly to Waters)*			

Step 2: **Allowable Release Rate Assessment**

		Type Yes or No for all that apply	Notes
Question 1:	Does the site drain directly to Waters?	No	
Question 2:	Does the site only include residential land use?	No	
Question 3:	Is the Regulated Development a Lot-to-Lot Buillding (85% or more of site footprint is occupied by buildings)?	No	
Question 4:	Do you plan to use the standard maximum release rate (only available to sites less than 1.75 acres)?	No	Complete Tab 0.0 Release Rate to calculate the allowable release rate for the site unless a 1 cfs/ac release rate to waters will be used.
Question 5:	Is the site more than 75 percent of substantially contiguous at-grade open space that is conducive to ponding of surface waters (Answer "No" if site discharges to waterway or is a service station)?	No	
Question 6:	Does the development involve flow diversions (existing sewer connection to be relocated to a different main) or multiple sewer connections (only available to sites over 1.75 acres)?	No	
Question 7:	Are there widespread contaminated soils on the site, high ground water table, or is this development classified as a lot-to-lot building?	Yes	Oversized detention is allowed to meet volume control requirements. After completing this worksheet, fill out Tab 2.1.9 to design oversized detention.

City of Chicago
Department of Water Mangement

Name of Project: Green Era Digester
Address: 650 W. 83rd Street
A/E of Record: Terra Engineering, Ltd.

1.0 Rate Control (Sheet 2 of 2)

Step 3: **Achieving Rate Control Measures**

Unadjusted Detention Release Rate =	2.404	cfs	Release Rate from Tab 0.0. To override, enter value in the cell to the right ->	2.404
Dry Weather Flow Rate = (From dry weather flow worksheet)	0.000	cfs	Waiting for Dry Weather Flow worksheet to be completed	
Infiltration Facility Release Rate (to be added to eligible release rate when computing required storage)	0.000	cfs	No BMPs with infiltration beds entered on BMP Summary Worksheet or soil's infiltration rate is less than 0.5 in/hr	
Release rate for detention storage computations:	**2.404**	cfs		
Required Storage Volume =	81,520	cu ft		

Detention Storage Calculations
(Based on Bulletin 70 Rainfall Data)

STORM EVENT (5,10,25,50 or 100) = **100**

Allowable release rate 2.404 cfs

Storm Duration (minute)	Runoff Coefficient C	Rainfall Intensity (in/hr)	Drainage Area A (acres)	Inflow Rate Q=CIA	Total Storm Vol (cu ft)	Release Rate Qo (cfs)	Storage Rate (Qi-Qo) (cfs)	Storage Volume Rate (Qi-Qo)*t*60 (cu ft)
5	0.69	10.920	8.91	67.07	20,120	2.404	64.66	19,399
10	0.69	10.020	8.91	61.54	36,924	2.404	59.13	35,481
15	0.69	8.200	8.91	50.36	45,325	2.404	47.96	43,161
30	0.69	5.600	8.91	34.39	61,908	2.404	31.99	57,580
60	0.69	3.560	8.91	21.86	78,711	2.404	19.46	70,056
120	0.69	2.235	8.91	13.73	98,831	2.404	11.32	81,520
180	0.69	1.617	8.91	9.93	107,233	2.404	7.52	81,266
360	0.69	0.947	8.91	5.81	125,584	2.404	3.41	73,650
720	0.69	0.549	8.91	3.37	145,704	2.404	0.97	41,836
1080	0.69	0.387	8.91	2.38	154,106	2.404	-0.03	-1,696
1440	0.69	0.316	8.91	1.94	167,593	2.404	-0.46	-40,143
2880	0.69	0.170	8.91	1.04	180,417	2.404	-1.36	-235,055
4320	0.69	0.122	8.91	0.75	194,125	2.404	-1.66	-429,083
7200	0.69	0.083	8.91	0.51	220,215	2.404	-1.89	-818,465
14400	0.69	0.046	8.91	0.29	246,304	2.404	-2.12	-1,831,055
							Required Detention Volume (cu ft)	81,520

Note: 1) the calculation assumes that the rising and recessing limb of inflow and outflow hydrograph are vertical

City of Chicago
Department of Water Management

Name of Project:	Green Era Digester
Address:	650 W. 83rd Street
A/E of Record:	Terra Engineering, Ltd.

1.1 Dry Weather Flow

Average Dry Weather Flow

Land Use	Average Gallons per Day (gpd)		Quantity	Average Dry Weather Flow	
Hospitals	250	per bed space		0.000	cfs
Hotels (w/laundry)	150	per room		0.000	cfs
Hotels (w/o laundry)	60	per room		0.000	cfs
Single Family	350	per home		0.000	cfs
Multi-Family - 3 bedroom	300	per unit		0.000	cfs
Multi-Family - 2 bedroom	300	per unit		0.000	cfs
Multi-Family - 1 bedroom	150	per unit		0.000	cfs
Studio Apartment	100	per unit		0.000	cfs
Boarding Homes	50	per person		0.000	cfs
Factories (excluding process water)	35	per person, per shift		0.000	cfs
Office	15	per person, per shift		0.000	cfs
Restaurant (w/ lounge)	12	per patron		0.000	cfs
Restaurant (w/o lounge)	10	per patron		0.000	cfs
Convention Center	5	per patron		0.000	cfs
			Total	0.000	cfs
		Equivalent Drainage Area		0	sq ft

Peak Dry Weather Flow

To be used for sewer connection sizing and surcharge calculations

The DWF (with peaking factor) should be based on the number of fixture units (FTU), reference the Municipal Building Code, Table 18.29-1108.1. The conversion from the number of fixture units to drainage area (sf) to peak DWF (cfs) is as follows:

Drainage area = [(FTU – 150) * 7.2] + 4850 sf
Peak DWF = Drainage Area / 43,560 sf/acre * 1.0 cfs/acre

Building Fixture Units	883	FTU
Equivalent Drainage Area	10,128	sq ft
Peak DWF	0.23	cfs

City of Chicago
Department of Water Management

Name of Project: Green Era Digester
Address: 650 W. 83rd Street
A/E of Record: Terra Engineering, Ltd.

1.3 Restrictor Sizing

		Type Yes or No	Notes
Question 1:	Does the design include Oversized Detention with an associated reduction in the allowable release rate?	No	The release rate will be taken from from Tab 1.0 Rate Control.
Question 2:	Does the design exceed the Stormwater Ordinance requirements by achieving strategy 3.1 or 3.2 of the Sustainable Development Policy with an associated reduction in the allowable release rate?	No	The release rate will be taken from from Tab 1.0 Rate Control.

This worksheet takes the allowable release rate from Tab 1.0 (typically) or Tab 2.1.9 (for Oversized Detention) of Tab 3.1 (for Exceeding the Stormwater Ordinance to meet the Sustainable Development Policy), and sizes an orifice to provide this peak discharge rate. Discharge through infiltration is not included when sizing the restrictor.

Summary of Release Rates:

Release Rate from Tab 1.0 Rate Control	Q	2.404	cfs
Release Rate from Tab 2.1.9 Oversized Detention	Q		cfs
Release Rate from Tab 3.1 Exceed Rate Control	Q		cfs
Controlling (Smallest) Release Rate	Q	2.404	cfs

Restrictor Head Calculation (for both Orifice Plate and Vortex Restrictors):

100-Year High Water Level	HWL	13.00	feet
Upper Invert of Half-Trap		4.15	feet
Calculated Head	h	8.85	feet

Orifice Plate Sizing Calculation:

This calculation is used to size the appropriate diameter orifice in a steel plate. See Sewer Detail A-19.

General Formula: $Q = C_d A(2gh)^{0.5}$

Where: C_d = 0.61 for sharp-edged plate bolted to a catch basin
C_d = 0.82 for pipes less than 2 feet long grouted into sewer

Orifice Description:		Orifice Plate	
Discharge	Q	2.404	cfs
Discharge coefficient	C_d	0.61	unitless
Calculated Head	h	8.85	feet

Orifice Diameter	d	5.50	inches

Specify a Vortex Restrictor:

Calculated Head	h	8.85	feet
Release Rate for Vortex Restrictor	Q		cfs

City of Chicago
Department of Water Management

Name of Project: Green Era Digester
Address: 650 W. 83rd Street
A/E of Record: Terra Engineering, Ltd.

2.0 Volume Control

Step 1: **Runoff Calculation**

		Existing Area (sq ft)	Proposed Area (sq ft)
Pervious Surface or Land Cover not Counted as Impervious for Volume Control Calculations	Bare Earth		
	Lawn or Landscaped Areas		
	Woodlands	45,472	154,709
	Wetland		
Impervious Land	Gravel	324,808	49,666
	Pavement	17,622	104,329
	Roofs (conventional)		46,374
	Water (including Wet Bottom Basin to HWL)		
BMPs	Green Roof	-	
	Permeable Pavement	-	
	Bioinfiltration	-	
	Swales	-	
	Stormwater Trees	-	
	Roof Runoff Planters	-	
	Filter Strips	-	
	Dry Bottom Basins to HWL	-	32,824

Summary	Total pervious area (sq ft)	45,472	154,709
	Total impervious area (sq ft)	342,430	200,369
	Total BMP areas treated as impervious area (sq ft)	-	0
	Total BMP areas treated as pervious area (sq ft)	-	32,824
	Total site area (sq ft)	387,902	387,902
	Imperviousness percentage (%)	88.3	51.7

Step 2: **Volume Control Assessment**

		Type Yes or No for all that apply	Note
Question 1:	Does the site drain directly to Waters?	No	
Question 2:	Are infiltration BMPs allowable? (See Chapter III Sections 4.1.2 of the Regulations.)	No	Infiltration BMPs are not allowed. Achieve volume control requirement through 15% impervious area reduction or by Oversized Detention.
Question 3:	Do you wish to use permeable pavement only as a pervious surface to achieve impervious surface reduction goal?	No	Areas of permeable pavement are included as an impervious surface for the computation made in Cell C48. Storage will be counted toward volume control goal.

Step 3: **Achieving Volume Control Measures**

Achieve I. or II. below in accordance with the Ordinance.

I.	Capture 0.5" of runoff from impervious surfaces. Storage required =	8,349	cubic feet	Go to spreadsheet 2.1 BMP Volume Summary if electing volume control storage option
or, II.	Reduce proposed imperviousness to:	73.3	percent	REQUIREMENT MET! Imperviousness reduction meets volume control requirements

TERRA ENGINEERING LTD.
225 West Ohio Street, 4th Floor
Chicago, Illinois 60610
T:(312)467-0123 F:(312) 467-0220

Proposed Conditions 10-Yr Storm Sewer Analysis Utilizing MWRD Runoff Coefficients

Green Era 1/6/2020
(Page 1 Of 1) REV : 2/6/2020
Chicago, IL
Prepared By: MJC
Checked By: CJM Manning's Roughness Coeff: 0.011 DIP/PERF PVC
0.011 VCP
10-year storm event. 0.013 RCP

Structure ID		Sewer Segment		Weighted	Area X C		Time Of Concentration (T_c)		Rainfall	Total		E isting	Pipe	Hydraulic	Pipe	Manning's	design	% of	Flow	Velocity	
From	To	Length (ft)	Increment (acres)	Runoff Coeff. C	Incr.	Total	To Struc. (min.)	Section (min.)	Intensity i (10yr)	Runoff ( ) (cfs)	Pipe Dia. (in)	Slope (ft/100ft)	Area (S .Ft.)	Radius (ft)	Material	(n)	Capacity (cfs)	**Capacity (%)**	Factor	Full (ft/sec)	Design (ft/sec)
MH1	**CB1**	124	0.114	0.90	0.10	0.10	5.00	0.93	6.48	0.66	**12**	**0.20**	0.79	0.25	VCP	0.011	1.89	**35.2%**	0.92	2.40	2.21
CB1	**MH6**	60	0.358	0.70	0.25	0.35	7.35	0.35	6.20	2.18	**18**	**0.20**	1.77	0.38	VCP	0.011	5.57	**39.1%**	0.92	3.15	2.90
MH6	**CB9**	209	0.000	0.90	0.00	0.35	7.97	1.27	6.12	2.15	**18**	**0.18**	1.77	0.38	VCP	0.011	5.28	**40.7%**	0.92	2.99	2.75
CB9	**MH5**	117	0.482	0.74	0.36	0.71	12.29	0.58	5.61	3.96	**18**	**0.19**	1.77	0.38	DIP	0.011	5.43	**73.0%**	1.10	3.07	3.38
MH5	**CB8**	146	0.000	0.00	0.00	0.71	12.87	0.84	5.54	3.91	**18**	**0.18**	1.77	0.38	RCP	0.013	4.47	**87.6%**	1.14	2.53	2.88
CB8	**FES2**	47	0.479	0.76	0.36	1.32	13.71	0.23	5.11	6.74	**24**	**0.19**	3.14	0.50	RCP	0.013	9.89	**68.1%**	1.10	3.15	3.46
TD3	**CB10**	9	0.038	0.90	0.03	0.03	5.00	0.03	6.48	0.22	**12**	**1.26**	0.79	0.25	DIP	0.011	4.74	**4.7%**	0.73	6.03	4.40
CB10	**CB8**	78	0.451	0.47	0.21	0.25	10.93	0.48	5.69	1.41	**12**	**0.21**	0.79	0.25	DIP	0.011	1.93	**72.7%**	1.10	2.46	2.71
TD1	**MH3**	94	0.032	0.90	0.03	0.03	5.00	0.71	6.48	0.19	**12**	**0.32**	0.79	0.25	DIP	0.011	2.39	**7.8%**	0.73	3.04	2.22
MH3	**CB6**	80	0.000	0.00	0.00	0.03	5.71	0.60	6.40	0.18	**12**	**0.32**	0.79	0.25	DIP	0.011	2.39	**7.7%**	0.73	3.04	2.22
CB2	**MH2**	119	0.409	0.90	0.37	0.37	5.00	0.64	6.48	2.38	**18**	**0.20**	1.77	0.38	DIP	0.011	5.57	**42.8%**	0.99	3.15	3.12
CB3	**CB3A**	9	1.044	0.81	0.84	0.84	7.97	0.03	6.12	5.16	**18**	**0.56**	1.77	0.38	DIP	0.011	9.31	**55.4%**	1.06	5.27	5.59
MH2	**CB3A**	200	0.000	0.00	0.00	0.37	5.00	1.07	6.48	2.38	**18**	**0.20**	1.77	0.38	DIP	0.011	5.57	**42.8%**	0.99	3.15	3.12
CB4	**CB3A**	102	0.053	0.45	0.02	0.02	6.52	0.77	6.30	0.15	**12**	**0.32**	0.79	0.25	DIP	0.011	2.39	**6.3%**	0.73	3.04	2.22
CB3A	**CB6**	164	1.044	0.81	0.84	1.23	8.00	0.69	6.12	7.56	**24**	**0.18**	3.14	0.50	VCP	0.011	11.37	**66.4%**	1.10	3.62	3.98
CB6	**CB7**	137	0.571	0.78	0.45	1.71	8.68	0.61	6.04	10.33	**30**	**0.18**	4.91	0.63	RCP	0.013	17.45	**59.2%**	1.06	3.55	3.77
CB7	**MH4**	129	0.610	0.78	0.48	2.19	9.29	0.54	5.97	13.05	**30**	**0.19**	4.91	0.63	RCP	0.013	17.93	**72.8%**	1.10	3.65	4.02
MH4	**FES1**	52	0.000	0.00	0.00	2.19	9.95	0.25	5.89	12.87	**30**	**0.13**	4.91	0.63	RCP	0.013	14.83	**86.8%**	1.14	3.02	3.44

CB5	**MH8**	73	0.066	0.45	0.03	0.03	6.34	0.54	6.32	0.19	**8**	**0.54**	0.35	0.17	DIP	0.011	1.05	**17.8%**	0.75	3.01	2.26
TD2	**MH8**	7	0.321	0.78	0.25	0.25	7.54	0.03	6.18	1.55	**12**	**0.54**	0.79	0.25	DIP	0.011	3.10	**49.8%**	0.99	3.95	3.91
MH8	**CB16**	49	0.000	0.00	0.00	0.28	7.57	0.21	6.17	1.73	**12**	**0.48**	0.79	0.25	DIP	0.011	2.93	**59.1%**	1.06	3.72	3.95
CB16	**CB15**	104	0.072	0.45	0.03	0.31	7.78	0.50	6.15	1.92	**12**	**0.32**	0.79	0.25	DIP	0.011	2.39	**80.4%**	1.14	3.04	3.47
CB18	**CB17**	116	0.439	0.52	0.23	0.23	14.54	0.43	4.94	1.12	**12**	**1.00**	0.79	0.25	VCP	0.011	4.22	**26.5%**	0.83	5.38	4.46
CB17	**PIPE**	71	0.451	0.60	0.27	0.50	14.98	0.21	4.84	2.41	**12**	**1.00**	0.79	0.25	VCP	0.011	4.22	**57.0%**	1.06	5.38	5.70
CB15	**CB14**	114	0.169	0.45	0.08	0.89	15.18	0.43	5.26	4.65	**18**	**0.32**	1.77	0.38	DIP	0.011	7.04	**66.1%**	1.10	3.98	4.38
CB14	**CB14A**	109	0.167	0.45	0.08	0.96	15.62	0.46	5.21	5.00	**18**	**0.24**	1.77	0.38	DIP	0.011	6.10	**82.0%**	1.14	3.45	3.93
CB14A	**FES3**	42	0.084	0.45	0.04	1.00	16.08	0.20	5.15	5.14	**18**	**0.19**	1.77	0.38	DIP	0.011	5.43	**94.8%**	1.14	3.07	3.50
CB11	**MH9**	99	0.063	0.45	0.03	0.03	13.00	0.70	5.26	0.15	**12**	**0.50**	0.79	0.25	RCP	0.013	2.53	**5.9%**	0.73	3.22	2.35
FES4	**MH9**	9	1.194	0.51	0.61	4.11	13.70	0.01	5.11	21.01	**24**	**5.00**	3.14	0.50	RCP	0.013	50.72	**41.4%**	0.99	16.15	15.98
MH9	**CB12**	77	0.000	0.00	0.00	4.14	13.71	0.19	5.11	21.14	**30**	**0.51**	4.91	0.63	RCP	0.013	29.37	**72.0%**	1.10	5.98	6.58
CB12	**CB13**	108	0.029	0.45	0.01	4.15	13.90	0.28	5.41	22.47	**30**	**0.50**	4.91	0.63	RCP	0.013	29.08	**77.3%**	1.10	5.92	6.52
FES5	**CB13**	47	0.262	0.49	0.13	1.13	14.18	0.08	5.38	6.07	**24**	**3.28**	3.14	0.50	RCP	0.013	41.08	**14.8%**	0.73	13.08	9.55

DATED 1/22/20

Pond Volume Provided - Hill 1

Elevation	Area	Total Area	Increm. Volume	Cumulative Volume
10.00	1565	1565.00	0.00	0.00
11.00	725	2290.00	1118.40	1118.40
			Total Volume (cf) =	**1118.40**

Pond Volume Provided - Hill 2

Elevation	Area	Total Area	Increm. Volume	Cumulative Volume
10.00	1612	1612.00	0.00	0.00
11.00	691	2303.00	1119.47	1119.47
			Total Volume (cf) =	**1119.47**

Overall Pond Volume Provided (HWL = 13.00)

Elevation	Area	Total Area	Increm. Volume	Cumulative Volume
9.00	0	0.00	0.00	0.00
10.00	22570	22570.00	7523.33	7523.33
11.00	25947	48517.00	24238.89	31762.22
12.00	29306	77823.00	27609.47	59371.69
13.00	32824	110647.00	31048.39	90420.08
			Total Volume (cf) =	**90420.08**

Overall Pond - Hill 1 - Hill 2 = Final Volume (cf) = 88182.21

N

Scale: 1 inch = 20ft.

LEGEND

- PROPERTY LINE
- CATCHMENT AREA BOUNDARY
- STM CBXX STRUCTURE NUMBER

STM CB4 AREA
STM CB5 AREA
STM CB5A AREA
STM CB3A AREA
STM CB2 AREA
STM CB16 AREA
STM CB15 AREA
STM CB6 AREA
STM CB18 AREA
STM CB17 AREA
STM CB1 AREA
STM CB7 AREA
STM CB814 AREA
STM CB9 AREA
STM CB8 AREA
STM FES4 AREA
STM FES5 AREA
STM CB14A AREA
STM CB13 AREA
STM CB10A AREA
STM CB12 AREA
STM CB11 AREA
STM CB10 AREA

PR. BUILDING FFE18.00
PR. DIGESTER FFE17.25
PR. DIGESTER FFE17.50
PR. POLE BARN FFE17.75
PROPOSED DETENTION POND HWL=13.00

STM CB4 RIM 13.35
STM CB3 RIM 13.41
STM CB3A RIM 14.81
STM CB5 RIM 13.32
STM CB5A RIM 13.43
STM CB16A RIM 13.91
STM MH2 RIM 16.81
STM CB2 RIM 15.55
STM CO5 RIM 17.80
STM CO6 RIM 17.50
STM MH1 RIM 17.30
STM TD1 RIM 14.50
STM CO7 RIM 17.95
STM MH3 RIM 17.00
STM CB6 RIM 15.34
STM CB18 RIM 17.10
STM CB17 RIM 17.10
STM CB16 RIM 13.00
STM CB15 RIM 13.00
STM CO4 RIM 17.95
STM CO3 RIM 17.95
STM CB1 RIM 16.25
STM MH6 RIM 17.25
STM CO2 RIM 17.95
STM CO8 RIM 17.95
STM CB7 RIM 15.34
STM CB14 RIM 13.00
STM CO1 RIM 17.95
STM CB7A RIM 16.20
STM CB9 RIM 15.56
STM MH5 RIM 17.20
STM CB8 RIM 15.36
STM CB14A RIM 13.10
STM FES1 30"Ø INV 10.00
STM FES2 24"Ø INV 10.00
STM FES3 18"Ø INV 10.00
STM FES5 24"Ø INV 9.00
STM FES4 24"Ø INV 9.00
STM CB10 RIM 13.70
STM CB10A RIM 13.92
SAN MH1 RIM 17.15
STM CB11 RIM 12.90
STM MH9 RIM 13.65
STM CB12 RIM 12.50
STM CB13 W/ 5.50"Ø PLATE RESTRICTOR RIM 12.70

TOWER 8.65'N.
TOWER 8.01'N.
FENCE COR. 189.82' E'RLY & ONLINE
WALL 2.4" W'RLY.
FACE OF CONCRETE RETAINING WALL
WALL ENDS 235.42' S'RLY. & 18.16" SE'RLY
RAMP TO R.R.
CHICAGO, ROCK ISLAND, AND PACIFIC RAILROAD
S. WALLACE STREET 66' R.O.W.
W. 83RD STREET 66' R.O.W.
DIRT & BROKEN ASPHALT
8" D.I. WATER MAIN
24" SEWER
6" HIGH PRESSURE PLASTIC GAS LINE
6" HIGH PRESSURE STEEL GAS LINE
TRANSMISSION GAS LINE
OF 13.10

MKB Architects
ARCHITECTS/PLANNERS
1918 NORTH MENDELL STREET
SUITE 300
CHICAGO, ILLINOIS 60642
P. 773.235.3800
F. 773.235.3833

TERRA ENGINEERING LTD.
CIVIL ENGINEER/LANDSCAPE ARCHITECT
225 West Ohio Street
Suite 400
Chicago, Illinois 60654
P. 312.467.0123
F. 312.467.0220

REV	DATE	ISSUE
2	02/06/20	RE-ISSUED FOR PERMIT
1	01/22/20	RE-ISSUED FOR PERMIT
	01/20/20	ISSUED FOR BID - ADDENDUM 1
	01/07/20	ISSUED FOR BID
	12/27/19	ISSUED FOR PERMIT
	01/25/19	ISSUE FOR REVIEW
	11/8/18	ISSUE FOR PRICING

GREEN ERA EDUCATIONAL NFP
GREEN ERA SUSTAINABILITY, LLC

650 WEST 83RD STREET
CHICAGO, IL 60620

I HEREBY CERTIFY THAT THIS PLAN, SPECIFICATION, OR REPORT WAS PREPARED BY ME OR UNDER MY DIRECT SUPERVISION AND THAT I AM A DULY LICENSED REGISTERED ENGINEER UNDER THE LAWS OF THE STATE OF ILLINOIS.

EXP. DATE: 11/30/2021 REGISTRATION NO. 062-047537

JOHN BOU-SAAB 062-047537 REGISTERED PROFESSIONAL ENGINEER STATE OF ILLINOIS

DRAWN BY: MJC/SJL
CHECKED BY: CAM/SJL
APPROVED: CAM/JBS
SCALE: 1"=20'

© 2018

JOB NO.	SITE GRADING PLAN
15-194-002	CEX-1.0

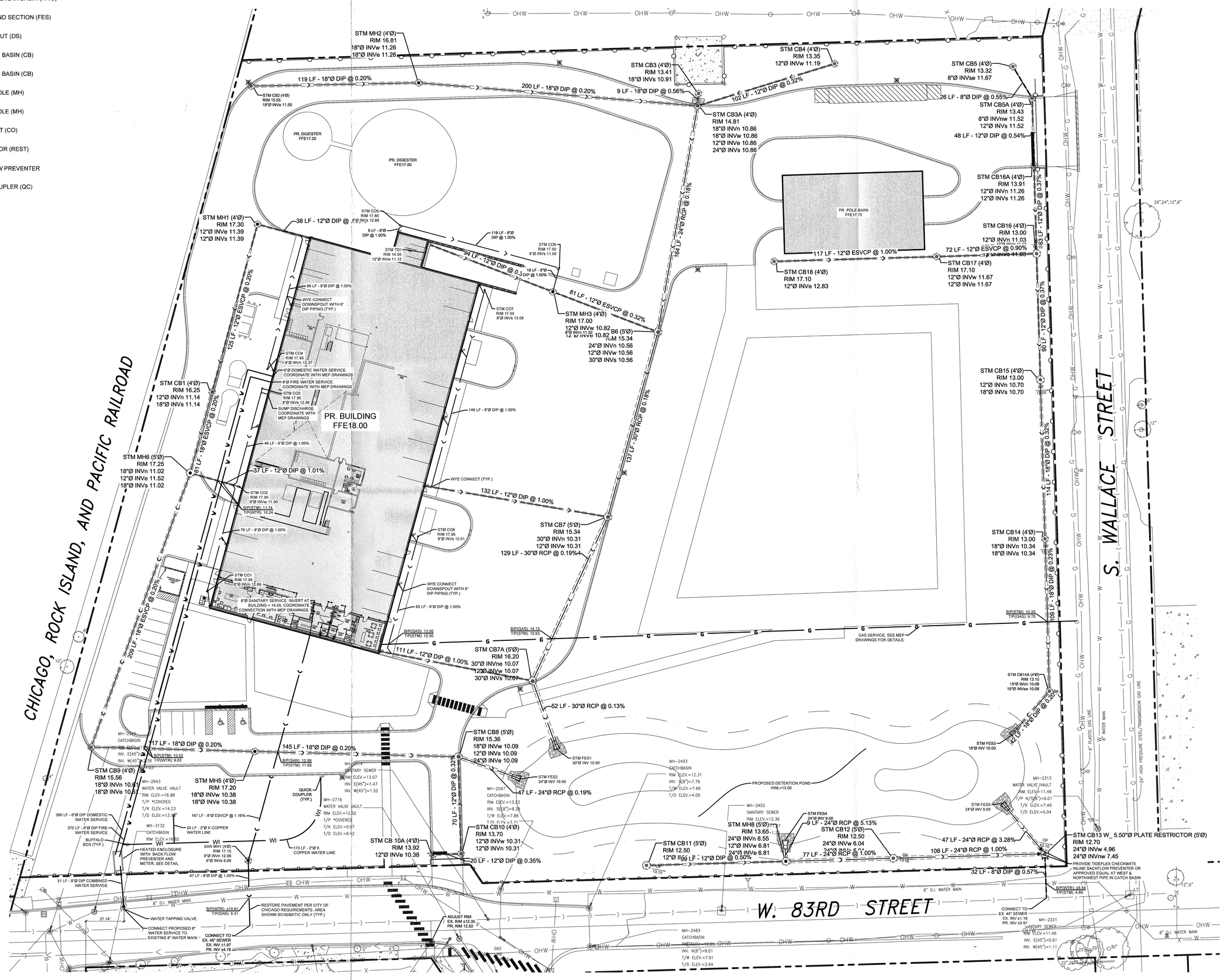

OWNER INFORMATION & EMPLOYEE TRAINING:

THE PEOPLE REPRESENTED BELOW ARE INVOLVED WITH AND RESPONSIBLE FOR THE OPERATIONS AND MAINTENANCE (O&M) OF THE STORMWATER DETENTION FACILITIES AS OUTLINED HEREIN.

1. PROPERTY OWNER LISTED BELOW SHALL BE RESPONSIBLE FOR OVERSEEING AND ENSURING PROPERTY O&M IS CARRIED OUT AND PERFORMED AS DOCUMENTED HEREIN.

   GREEN ERA EDUCATIONAL NFP
   218 N JEFFERSON ST, STE 300
   CHICAGO, IL 60661
   (312) 544-9218

2. THE HEAD OF FACILITIES LISTED BELOW SHALL BE RESPONSIBLE FOR PERFORMING THE O&M DOCUMENTED HEREIN. HE/SHE SHALL ASSIGN RESPONSIBILITY FOR O&M OF ALL ONSITE BMPS (BEST MANAGEMENT PRACTICES) AND SHALL CONDUCT TRAINING SO THAT THESE INDIVIDUALS ARE AWARE OF PROPER INSPECTION AND O&M. TRAINING SHALL OCCUR WITHIN ONE MONTH OF CONSTRUCTION COMPLETION AND/OR BUILDING OCCUPANCY IN ORDER TO MAKE ALL PERSONNEL FAMILIAR WITH THE COMPONENTS OF THE O&M PLAN AND THEIR PERSONAL LEVEL OF RESPONSIBILITY.

   GREEN ERA EDUCATIONAL NFP
   218 N JEFFERSON ST, STE 300
   CHICAGO, IL 60661
   (312) 544-9218

O&M PRACTICES AND IMPLEMENTATION SCHEDULE:

INFORMATION IN THIS SECTION OUTLINES THE SPECIFIC INSPECTION AND MAINTENANCE REGIMEN FOR EACH BMP (BEST MANAGEMENT PRACTICE) AND MUST COMPLY WITH THE FOLLOWING:

1. O&M PLAN PROCEDURES AND PRACTICES MUST BE REVIEWED AND ASSESSED ANNUALLY.
2. ACCESS ROUTES INCLUDING ROADWAYS AND SIDEWALKS MUST BE REVIEWED AND ASSESSED ANNUALLY.
3. DRAINAGE STRUCTURES AND FLOW RESTRICTORS MUST BE INSPECTED AND CLEANED SEMI-ANNUALLY.
4. VOLUME CONTROL BMPS SHALL BE INSPECTED SEMI-ANNUALLY AND AFTER SIGNIFICANT RAINFALL EVENTS EXCEEDING 1.5 INCHES.
5. THE CITY REQUIRES THAT PROPERTY OWNERS KEEP AN O&M INSPECTION AND MAINTENANCE LOGBOOK. IN GENERAL, THE LOGBOOK SHOULD NOTE ALL INSPECTION DATES, FACILITY COMPONENTS INSPECTED, AND ANY MAINTENANCE PERFORMED AND REPAIRS MADE. ALL INSPECTIONS AND MAINTENANCE, BOTH ROUTINE AND EMERGENCY, SHOULD BE RECORDED IN THE LOGBOOK. EACH BMP-SPECIFIC O&M SHEET SHOULD SERVE AS A CHECKLIST FOR DESIGN ELEMENTS THAT REQUIRE INSPECTION, THE FREQUENCY OF INSPECTIONS, AND CONDITIONS THAT INDICATE MAINTENANCE IS NEEDED. LOG BOOKS MUST BE PRODUCED UPON THE REQUEST OF A CITY INSPECTOR.
6. VEGETATION SHALL BE MAINTAINED ON A REGULAR BASIS.
7. PEST CONTROL MEASURES SHALL BE IMPLEMENTED TO ADDRESS INSECTS AND RODENTS.
8. SIGNAGE AND FENCING SHALL BE INSTALLED AND MAINTAINED WHERE NECESSARY TO PROTECT PROPERTY AND THE PUBLIC.
9. UNDERGROUND VAULTS MUST INCLUDE DESIGN MEASURES TO FACILITATE CLEANING AND MAINTENANCE. CONFINED SPACE SAFETY PROCEDURES MUST BE FOLLOWED.

DRAINAGE SWALES

1. AS NEEDED/ONGOING
   - 1.1. MOW AND TRIM VEGETATION TO ENSURE SAFETY, AESTHETICS, PROPER SWALE OPERATION, OR TO SUPPRESS WEEDS AND INVASIVE VEGETATION. MOW ONLY WHEN SWALE IS DRY TO AVOID RUTTING.
   - 1.2. RE-SEED BARE AREAS; INSTALL APPROPRIATE EROSION CONTROL MEASURE WHEN NAIVE SOIL IS EXPOSED OR EROSION CHANNELS ARE FORMING.
   - 1.3. PLANT ALTERNATIVE GRASS SPECIES IN THE EVENT OF UNSUCCESSFUL ESTABLISHMENT.
   - 1.4. REMOVE LITTER.
   - 1.5. CLEAR OBSTRUCTIONS AND REPAIR ANY CHANNELIZATION NEAR CHECK DAMS (IF APPLICABLE)
2. ONCE PER YEAR
   - 2.1. INSPECT AND CORRECT EROSION PROBLEMS, DAMAGE TO VEGETATION, SEDIMENT AND DEBRIS ACCUMULATION, AND POOLS OF STANDING WATER.
   - 2.2. INSPECT FOR UNIFORMITY IN CROSS-SECTION AND LONGITUDINAL SLOPE, CORRECT AS NEEDED.

NATURAL LANDSCAPING AND STORMWATER TREES

1. AS NEEDED/ONGOING
   - 1.1. WATER PLANTS DURING FIRST GROWING SEASON
   - 1.2. WATER PLANTS DURING DRY PERIODS AFTER FIRST GROWING SEASON
   - 1.3. REMULCH VOID AREAS
   - 1.4. TREAT DISEASED TREES AND SHRUBS
   - 1.5. TREES COUNTED AS A STORMWATER MANAGEMENT BMP THAT DO NOT SURVIVE SHOULD BE REPLACED
   - 1.6. KEEP OVERFLOW FREE AND CLEAR OF LEAVES
2. MONTHLY
   - 2.1. INSPECT SOIL AND REPAIR ERODED AREAS
   - 2.2. REMOVE LITTER AND DEBRIS
   - 2.3. CLEAR LEAVES AND DEBRIS FROM OVERFLOW
3. TWICE PER YEAR
   - 3.1. INSPECT TREES AND SHRUBS TO EVALUATE HEALTH. ANY TREES COUNTED AS A STORMWATER MANAGEMENT BMP THAT DO NOT SURVIVE SHOULD BE REPLACED
4. ONCE PER YEAR
   - 4.1. ADD ADDITIONAL MULCH
   - 4.2. INSPECT FACILITY AND PRETREATMENT AREAS FOR SEDIMENT BUILDUP, EROSION, VEGETATIVE CONDITIONS, ETC.

ROOF RUNOFF

1. AS NEEDED/ONGOING
   - 1.1. OCCASIONAL CLEANING MAY BE NECESSARY TO REMOVE DEBRIS, SUCH AS LEAVES, COMING OFF THE DRAINAGE AREA
2. TWO WEEKS AFTER EVERY RAINFALL EVENT
   - 2.1. RAIN BARRELS AND CISTERNS BEING USED TO PROVIDE RATE CONTROL VOLUME MUST BE DRAINED/PUMPED OUT
3. MONTHLY
   - 3.1. REMOVE LEAVES AND DEBRIS
   - 3.2. CLEAR LEAVES AND DEBRIS FROM OVERFLOW PIPE
4. TWICE PER YEAR
   - 4.1. INSPECT PLANTS IN PLANTER BOXES TO EVALUATE HEALTH
5. ONCE PER YEAR
   - 5.1. FLUSH CISTERNS TO REMOVE SEDIMENT
   - 5.2. BRUSH THE INSIDE SURFACES AND THOROUGHLY DISINFECT
   - 5.3. TO AVOID STRUCTURAL DAMAGE, THE RAIN BARREL SHOULD BE DRAINED PRIOR TO FREEZING WEATHER

DETENTION BASINS

1. AS NEEDED/ONGOING
   - 1.1. SEDIMENT SHOULD BE REMOVED FROM THE BASIN AS NEEDED (AT LEAST ONCE EVERY 5 TO 10 YEARS)
2. QUARTERLY
   - 2.1. INSPECT INLET PIPE(S) AND OUTLET CONTROL STRUCTURE FOR CLOGGING AFTER EVERY STORM GREATER THAN ONE INCH
   - 2.2. REMOVE TRASH AND DEBRIS
   - 2.3. REMOVE INVASIVE PLANTS
   - 2.4. GRASSED AREAS ALSO REQUIRE PERIODIC PRUDENT FERTILIZING, DETHATCHING, AND SOIL CONDITIONING
   - 2.5. TREES, SHRUBS, AND OTHER VEGETATIVE COVER WILL REQUIRE PERIODIC MAINTENANCE SUCH AS FERTILIZING, PRUNING, AND PEST CONTROL
   - 2.6. MOW/TRIM DETENTION BASIN VEGETATION
3. ONCE PER YEAR
   - 3.1. INSPECT DETENTION BASIN, POTENTIAL PROBLEMS INCLUDE: SUBSIDENCE, EROSION, CRACKING OR TREE GROWTH ON THE EMBANKMENT; DAMAGE TO THE EMERGENCY SPILLWAY; SEDIMENT ACCUMULATION AROUND THE OUTLET; INADEQUACY OF THE INLET/OUTLET CHANNEL EROSION CONTROL MEASURES; CHANGES IN THE CONDITION OF THE PILOT CHANNEL; AND EROSION WITHIN THE BASINS AND BANKS

OPERATION AND MAINTENANCE PLAN OWNER'S CERTIFICATION STATEMENT:

PROPERTY NAME: GREEN ERA DIGESTER

PROPERTY ADDRESS: 650 WEST 83RD STREET, CHICAGO, IL 60620

AS THE OWNER(S) OF THE SUBJECT PROPERTY, BY SIGNING THIS DOCUMENT, I/WE ACKNOWLEDGE THAT I/WE HAVE RECEIVED AND I THE OPERATION AND MAINTENANCE PLAN, DATED JANUARY, 22, 2020, AND UNDERSTAND ITS CONTENTS. (AS REQUIRED BY THE STO MANAGEMENT ORDINANCE, SECTION 11-18-030).

IN THE EVENT THAT I/WE WERE TO SELL THIS PROPERTY, I/WE AGREE TO GIVE A COPY OF THE PLAN TO THE NEW OWNER(S) OWNER'S CERTIFICATION STATEMENT FOR SIGNATURE. THIS SIGNED CERTIFICATION STATEMENT MUST BE SUBMITTED TO T DEPARTMENT OF BUILDINGS UPON TRANSFER OF OWNERSHIP.

I/WE FURTHER AGREE TO ADHERE TO THE MAINTENANCE SCHEDULE OF BEST MANAGEMENT PRACTICES STIPULATED IN THE PLAN. ACKNOWLEDGE THAT IF I/WE DON'T MAINTAIN THE MEASURES AS SHOWN IN THE PLAN, UPON CITY INSPECTION, I/WE COULD BE LIAI VIOLATION OF THE CITY'S MUNICIPAL CODE (ACCORDING TO STORMWATER MANAGEMENT ORDINANCE SECTION 11-18-130).

Erika Allen
INITIAL OWNER(S) PRINTED NAME

INITIAL OWNER(S) SIGNATURE — DATE 2.20.20 — NOTARY PUBLIC

OFFICIAL SEAL
Joshua Chavez
NOTARY PUBLIC, STATE OF ILLINOIS
My Commission Expires Mar. 7, 2023

2ND OWNER(S) PRINTED NAME

INITIAL OWNER(S) SIGNATURE — DATE — NOTARY PUBLIC

3RD OWNER(S) PRINTED NAME

INITIAL OWNER(S) SIGNATURE — DATE — NOTARY PUBLIC

PEOPLES GAS NOTES:

1. FOR ALL NEW SERVICES AND RELATED EQUIPMENT, DEVELOPER IS REQUIRED TO CONTACT NEW SERVICE GROUP AT NEWSERVICEAPPLICATIONS@PEOPLESGASDELIVERY.COM AS SOON AS POSSIBLE TO ESTABLISH LOCATION
2. EXCAVATIONS PROHIBITED WITHIN 25 FEET OF NATURAL GAS TRANSMISSION PIPELINES/HP GAS MAINS UNLESS A REPRESENTATIVE OF THE PIPELINE IS NOTIFIED.
3. PEOPLES GAS HIGH PRESSURE GAS MAIN IS PRESENT WITHIN AREA OF CONSTRUCTION. USE EXTREME CAUTION NEAR ALL GAS FACILITIES. HAND EXCAVATION IS REQUIRED TO LOCATE AND EXPOSE GAS MAINS PRIOR TO CROSSING AND WORKING WITHIN 5 FEET OF ALL GAS FACILITIES. A MINIMUM OF 5' HORIZONTAL EDGE TO EDGE CLEARANCE AND 24" VERTICAL EDGE TO EDGE CLEARANCE IS REQUIRED FOR HIGH PRESSURE GAS MAINS. CONTRACTOR SHALL CONTACT SOUTH SHOP SYSTEM INTEGRITY OPERATIONS SUPERVISOR, JACOB WEBER, 312-806-0559, A MINIMUM OF 5 BUSINESS DAYS PRIOR TO EXCAVATION TO SET UP ON SITE INSPECTION. PEOPLES GAS TO BE ON SITE TO MONITOR CONSTRUCTION ACTIVITIES WHEN WITHIN 5 FEET AND WHENEVER CROSSING HIGH PRESSURE GAS FACILITIES. PIPELINE MARKERS SHALL BE MAINTAINED.

NOTES:

1. THE SITE MAP HEREIN OUTLINES THE LOCATION OF ALL BMPs (BEST MANAGEMENT PRACTICES) & STORMWATER MANAGEMENT FACILITIES THAT SHALL BE PROPERLY MAINTAINED AS OUTLINED HEREIN.

STORMWATER SUMMARY:

RATE CONTROL:

REQUIRED DETENTION:	81,520 CF
PROVIDED DETENTION:	88,182 CF

VOLUME CONTROL:

EXISTING IMPERVIOUS AREA:	88.3%
PROPOSED IMPERVIOUS AREA:	51.7%
AREA REDUCTION:	36.6%

MKB Architects
ARCHITECTS/PLANNERS
1918 NORTH MENDELL STREET
SUITE 300
CHICAGO, ILLINOIS 60642
P. 773.235.3800
F. 773.235.3833

TERRA ENGINEERING LTD.
CIVIL ENGINEER/LANDSCAPE ARCHITECT
225 West Ohio Street
Suite 400
Chicago, Illinois 60654
P. 312.467.0123
F. 312.467.0220

REV	DATE	ISSUE
3	02/18/00	RE-ISSUED FOR PERMIT
2	02/06/20	RE-ISSUED FOR PERMIT
1	01/22/20	RE-ISSUED FOR PERMIT
	01/20/20	ISSUED FOR BID - ADDENDUM 1
	01/07/20	ISSUED FOR BID
	12/27/19	ISSUED FOR PERMIT
	01/25/19	ISSUE FOR REVIEW
	11/8/18	ISSUE FOR PRICING

GREEN ERA EDUCATIONAL NFP
GREEN ERA SUSTAINABILITY, LLC

650 WEST 83RD STREET
CHICAGO, IL 60620

I HEREBY CERTIFY THAT THIS PLAN, SPECIFICATION, OR REPORT WAS PREPARED BY ME OR UNDER MY DIRECT SUPERVISION AND THAT I AM A DULY REGISTERED ENGINEER UNDER THE LAWS OF THE STATE OF ILLINOIS

EXP. DATE: 11/30/2021 REGISTRATION NO. 062-047537

JAMIL BOU-SAAB 062-047537 LICENSED PROFESSIONAL ENGINEER OF ILLINOIS

DRAWN BY: MJC/SJL
CHECKED BY: CAM/JL
APPROVED: CAM/JBS
SCALE: 1"=30'

©2018

JOB NO. 15-194-002

SITE OPERATION & MAINTENANCE PLAN
C6.0

ATTACHMENT 12
MWRD DISCHARGE AUTHORIZATION REQUEST

DAI ENVIRONMENTAL

Environmental Engineers, Geologists and Scientists

Tel 847.573.8900
Fax 847.573.8953

Polo Park Business Center
27834 N. Irma Lee Circle
Lake Forest, Illinois 60045-5130

November 4, 2021

Mr. Francis Wambi
Metropolitan Water Reclamation District of Greater Chicago
Industrial Waste Division
Monitoring & Research Department
111 East Erie Street
Chicago, IL 60611

Re: Request for Discharge Authorization
Green Era Renewable Energy & Urban Farming Campus
650 West 83rd Street
Chicago, Illinois 60620-1937

Mr. Wambi:

A food waste (solid and liquid) recycling (composting) facility (Green Era Renewable Energy and Urban Farming Campus) is being developed at the property addressed as 650 West 83rd Street in Chicago. The property is owned by Green Era Educational NFP. The facility and associated equipment are owned and operated by Green Era 83rd Street, LLC. As part of the food waste recycling process, wastewater other than typical domestic wastewater (i.e., sinks and toilets) will be generated that requires discharge to the sanitary district. Therefore,

Therefore, please find enclosed one (1) copy of the *Discharge Authorization Request* (DAR) form (RD-118) with original signatures and P.E. stamp. A detailed process narrative is provided as attachment to the DAR. Additionally provided with this DAR are figures and process flow diagram with pertinent information and P.E. stamp. As the facility is still presently under development, the only water use on-site to date has been the result of construction activities. No process wastewater has been generated for discharge, and thus no sampling data is included as part of this DAR. Water use and discharge numbers are estimated at this time. Please note that the Spill Prevention Control and Countermeasures Plan with slug control plan is in the process of being completed and will be submitted under separate cover letter. Also, the User Charge Methodology proposal will be submitted under separate cover once we have been supplied the final and complete specifications on the flow measurement device and meter to be used to calculate facility discharge volume.

If you have any questions or require additional information, please feel free to contact me at (847) 343-4257.

Sincerely,
DAI Environmental, Inc.

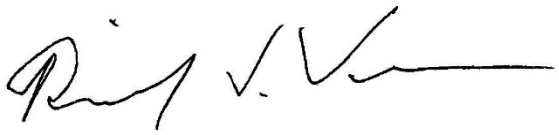

Richard J. Vamos, Ph.D., P.E.
Vice-President

Enclosure

cc: Ms. Erika Allen; Green Era Educational NFP (electronically)
Mr. Jason Feldman; Green Era Educational NFP (electronically)

DISCHARGE AUTHORIZATION REQUEST (DAR)

SECTION A - GENERAL INFORMATION

1. Facility* Details

Business Name: Green Era Renewable Energy and Urban Farming Campus

Address: 650 West 83rd Street

City, State, Zip Code: Chicago, IL 60620-1937

Telephone: (708) 792-0649 Fax:

Email Address: permits@greenerachicago.com Website: https://www.greenerachicago.com/

IL Sec. of State File No.: 05960932 FEIN: 81-3934327

PINs: 20-33-119-024-0000, 20-33-124-001-0000, 20-33-124-002-0000

(*See *Instructions* for definition of the term "Facility". Include all PINs for your facility.)

2. Mailing Address (if different from above)

Business Name: Green Era 83rd Street, LLC

Address: 218 North Jefferson Street, Suite 300

City, State, Zip Code: Chicago, IL 60661-1307

Telephone: (708) 792-0649 Fax:

Email Address: permits@greenerachicago.com Website:

IL Sec. of State File No.: 68888255 FEIN: 81-3934327

3. Identify the name(s) of all primary contacts, principal officers/owners, and facility contacts of your entity.

Name	Title	Telephone	Email	Primary Contacts	Officer/ Owner	Facility Contacts
Erika Allen	President	(708) 792-0649	permits@greenerachicago.com	✓	✓	✓
Jason Feldman	Director	(708) 792-0649	permits@greenerachicago.com		✓	✓

For MWRD Use Only

Date submitted

SECTION B - BUSINESS ACTIVITY

1. **Does (or will) this facility perform categorical processes defined under Title 40, Chapter I, Subchapter N of the Code of Federal Regulations?** ☐ Yes ■ No If yes, complete the table below.

Business Activity	Regulated Category	Average Production Rate (if applicable)
	40 CFR Part	
	40 CFR Part	
	40 CFR Part	

2. **Mass/Production-Based Limits.** Does the facility perform any processes regulated under a categorical pretreatment standard that has established mass or production-based limits? ☐ Yes ■ No

3. **Indicate all applicable North American Industry Classification System (NAICS) or Standard Industrial Classification (SIC) codes for all processes at your facility.**

Business Activity	NAICS Code	SIC Code
Food waste composting via anaerobic digestion	562219	4953

4. **Give a description of all operations at this facility, including primary and secondary products and services, raw materials and all chemicals used.**

   a. **Operations**

   See Attachment A for a detailed description of the facility operations.

   b. **Products and services**

   Commercial compost and biomethane are the products generated by the anaerobic digestion (composting) services offered by the facility (see Attachment A for a detailed description).

   c. **Raw materials and chemicals**

   Solid and liquid food waste are the "raw" materials at this facility. The only chemicals in use are a polymer to aid in flocculation prior to dewatering (see Attachment A for a detailed description).

5. **Average number of employees annually:** 6-8

For MWRD Use Only
Date submitted

SECTION C – WATER/WASTEWATER MONITORING

1. Water Sources (Check as many as are applicable):

- ■ Municipal Water Supply
- ☐ Private Well
- ☐ Surface Water
- ☐ Other (please specify): _____

2. Wastewater Characteristics

Does (or will) this facility discharge any wastewater to the local sanitary sewer system other than from restrooms?

■ Yes ☐ No

3. Monitoring of wastewater discharge

a. Water Intake Meters.
How many intake water meters (including fire meters) are used at your facility: 2

b. Flow metering Equipment.
Do you have continuous wastewater flow metering equipment at this facility? ☒ Yes ☐ No

c. Sampling Equipment.
Do you have automatic sampling equipment at this facility? Auto sampler not intended for MWRD discharge sampling ■ Yes ☐ No

d. Adjustment of Limits.
Are you adjusting the categorical pretreatment limits by employing the Combined Wastestream Formula (CWF)?

☐ Yes ■ No

For MWRD Use Only
Date submitted

4. Flow Monitoring and Sampling Equipment.

List all intake water meters, submeters, discharge flow meters, and sampling equipment for the facility on the following table. The location of each item provided in this table must also be included in the Building and Property Layout required under Section E, Item 1 of this application. If your facility has a primary measurement device (PMD), list the PMD and flowmeter device in the table below (see instructions for more details).

For equipment used to employ a CWF, attach a separate sheet showing the CWF calculations.

For equipment used to establish mass or production-based limits, attach a separate sheet showing the calculations used to derive the pretreatment limits for each sampling station that receives wastewater from one or more of these processes. Production-based limits must be converted to equivalent mass limits. Submit production data used in the calculations and the methodology used to calculate mass loading for purposes of determining compliance with the mass limits.

Type of Meter / Sampling Equip.	Municipal Account Number	Manufacturer	Serial Number	Size	Location	Purpose
Intake	1347789-699385	Badger Meter	190096455	3	Valve box; SW property corner	6-in domestic water line
Intake	1347789-699386	Badger Meter	190150616	5/8	Valve box; SW property corner	8-in fire water line
Discharge	N/A	TBD (ISCO likely)	TBD	TBD	Metering manhole; facility south-center	Facility combined discharge

For MWRD Use Only
Date submitted

5. Average Water Usage.

a. List average water usage for this facility. Check all that apply. Check "Measured" if the value entered is from water usage data from meter readings. Check "Estimate" if the value entered is from other calculations. Include the data with the submittal. Furnish copies of water bills and documentation for one year that show total water consumption, if available.

Gallons per day (GPD) based on production days

			Average	Maximum		
a.	■	Sanitary wastewater	385		☐ Measured	■ Estimate
b.	☐	Boiler makeup			☐ Measured	☐ Estimate
c.	☐	Cooling tower makeup			☐ Measured	☐ Estimate
d.	☐	Noncontact cooling water makeup			☐ Measured	☐ Estimate
e.	☐	Contact cooling water			☐ Measured	☐ Estimate
f.	■	Process	13,500		☐ Measured	■ Estimate
g.	■	Facility/equipment washdown	12,000		☐ Measured	■ Estimate
h.	☐	Air pollution control unit			☐ Measured	■ Estimate
i.	☐	Other (Specify): _____			☐ Measured	☐ Estimate
j.	☐	Other (Specify): _____			☐ Measured	☐ Estimate
		Total Water Usage (Sum of a - j)	25,885			

b. List water usage not discharged to the sewer system. Check all that apply. Check "Measured" if the value entered is from water usage data from meter readings. Check "Estimate" if the value entered is from other calculations.

Gallons per day (GPD) based on production days

			Average	Maximum		
k.	☐	Contained in product			☐ Measured	☐ Estimate
l.	☐	Irrigation and lawn watering			☐ Measured	☐ Estimate
m.	☐	Hauled off site			☐ Measured	☐ Estimate
n.	☐	Boiler evaporative loss			☐ Measured	☐ Estimate
o.	☐	Cooling tower evaporative loss			☐ Measured	☐ Estimate
p.	☐	Noncontact cooling water evaporative loss			☐ Measured	☐ Estimate
q.	☐	Other (Specify): _____			☐ Measured	☐ Estimate
r.	☐	Other (Specify): _____			☐ Measured	☐ Estimate
		Total Deductive Loss (Sum of k -r)				

For MWRD Use Only
Date submitted

6. Provide the following information on wastewater flow rate (New facilities may estimate).

	Mon	Tue	Wed	Thu	Fri	Sat	Sun
Hours of Operation (e.g., 9am-5pm)	24	24	24	24	24	24	24
Hours of Discharge (e.g., 10am-7pm)							
Hours Per Day Discharged							
Peak Hourly Flow Rate (gpm)							
Average Hourly Flow Rate Per Day (gpm)							
Average Number of Employees							

7. Batch Discharge.

Batch/infrequent discharges are those discharges which are intermittent or noncontinuous and which occur less frequently than once per hour. Do not include discharges from domestic sources (toilets, sinks, showers, etc.), boiler blowdown, noncontact cooling water, or air conditioner towers, or discharges which do not directly enter the sewer system, but are sent to treatment, recycle, etc.

If batch discharges occur or will occur, please complete the table below (New facilities may estimate).

Description of Batch Discharge (e.g., Hydro-Test Water)	Frequency of Batch Discharge (e.g.: daily, weekly, monthly)	Time of Batch Discharge			Average Volume (gallons) per Batch Discharge	Flow Rate (gpm)
		Day of Week	Time of Day	Duration		
Discharge of filtrate from two 30,000-gal tank	As needed, up to daily	Mon-Sat	24-hrs		60,000	85

For MWRD Use Only
Date submitted

8. Provide the below information for each connection to the local sanitary sewer system and type of discharge (Batch (B) or Continuous (C) or Both (B+C)).

Sampling Point	Sewer Size	Descriptive Location of the Sampling Point	Flow (GPD) Average	Flow (GPD) Maximum	Type of Discharge (B,C,B+C)
1A	8	In-line auto sampler (flow-based), after final sub-grade holding tanks (upstream of final on-site manhole)	60,385	108,575	B+C
		Total:	60,385	108,575	

9. Process flow discharge: List average daily wastewater discharge, maximum daily discharge, type of discharge (Batch (B) or Continuous (C) or both (B+C)), and sampling point for each process flow. Include the reference number for each flow consistent with the process flow diagram requested in Section E, Item 2 of this application. New facilities may provide estimates for each discharge. Regulated process flows apply to categorical users only.

Ref. No.	Regulated Process Flows	Flow (GPD) Average	Flow (GPD) Maximum	Type of Discharge (B,C,B+C)	Sampling Point

Ref. No.	Unregulated Process Flows	Flow (GPD) Average	Flow (GPD) Maximum	Type of Discharge (B,C,B+C)	Sampling Point
1	Non-recycled process wastewater (collected wash down and filtrate from dewatering)	60,000	108,000	B	1A
2	Domestic wastewater	385	575	C	1A

Ref. No.	Dilutional Flows	Flow (GPD) Average	Flow (GPD) Maximum	Type of Discharge (B,C,B+C)	Sampling Point

For MWRD Use Only
Date submitted

SECTION D – WASTEWATER PRETREATMENT

1. Is there any form of wastewater pretreatment or air pollution control (see list below) conducted at the facility?

☒ Yes ☐ No If yes, complete Items 2 through 9.

2. Does your facility have separate discharges from more than one pretreatment system?

☐ Yes ☒ No If yes, how many? _____

3. Type of pretreatment – check all applicable processes used at your facility and provide details where applicable.

a. Physical Treatment

☐ Air stripping	☐ Flow equalization	☐ Screening
☐ Centrifuge	☐ Gravity filtration	☐ Sedimentation/clarification
☐ Comminutor	☐ Grease/oil separation	☐ Sludge dryer
☐ Dissolved air flotation	☐ Grease trap	☐ Ultrafiltration
☐ Distillation	☐ Grit removal	☐ Other: _____
☐ Evaporation	☐ Pressure filtration	
☐ Flocculation	☐ Reverse osmosis	

b. Chemical Treatment

☐ Activated carbon adsorption	☐ Neutralization / pH adjustment	☐ Reduction
☐ Electrolytic recovery	☐ Oxidation	☐ Solvent extraction
☐ Ion exchange	☐ Precipitation	☐ Other: _____

c. Biological Treatment

☐ Septic tank	☐ Stabilization pond	☐ Other: _____

d. Air Pollution Control

☐ Cyclone	☐ Scrubber
☐ Filtration	☒ Other: details below

e. Details

The facility will operate a flare burner and a thermal oxidizer for air pollution control. Also, an ionization reactor and activated carbon adsorption unit will be operated for odor control. No water use/discharge will occur from any air pollution control equipment.

4. a. Do you have an Illinois Environmental Protection Agency (IEPA) Water Pollution Control Permit for the wastewater pretreatment system at your facility? ☐ Yes - Attach copy ☒ No

b. If no, has an Application for Permit or Construction Approval been filed with the IEPA for the wastewater pretreatment system at your facility? ☐ Yes ☒ No

For MWRD Use Only
Date submitted

5. a. Do you have an IEPA certified operator at your facility? ☐ Yes ■ No

b. If yes, list names of IEPA certified industrial wastewater pretreatment operators for your facility. Attach copies of Class K certifications.

Name _____ Name _____

Name _____ Name _____

6. a. Are any liquid wastes or sludge from this facility delivered to another entity/person for transport, reclamation, and/or disposal? ■ Yes ☐ No If yes, complete Item 6b.

b. These wastes may best be described as follows:
(Attach manifests or bills of lading for the most recent 180 days.)

	Estimated Quantity Generated per Month	Storage Containers*	Storage Method	Disposal Method
☐ Acids and alkalis			☐ on-site ☐ off-site	☐ on-site ☐ off-site
■ Oil and/or grease	25-gallons	Drums	■ on-site ☐ off-site	☐ on-site ■ off-site
☐ Paints			☐ on-site ☐ off-site	☐ on-site ☐ off-site
☐ Pretreatment sludges			☐ on-site ☐ off-site	☐ on-site ☐ off-site
☐ Plating wastes			☐ on-site ☐ off-site	☐ on-site ☐ off-site
☐ Solvents/thinners			☐ on-site ☐ off-site	☐ on-site ☐ off-site
☐ Organic compounds			☐ on-site ☐ off-site	☐ on-site ☐ off-site
☐ Pesticides			☐ on-site ☐ off-site	☐ on-site ☐ off-site
☐ Inks/dyes			☐ on-site ☐ off-site	☐ on-site ☐ off-site
☐ Other:_____			☐ on-site ☐ off-site	☐ on-site ☐ off-site

* Examples: 275-gallon tote, 55-gallon steel drums, dumpster, dry bags, sludge pit, etc.

c. Indicate whether your facility is the following:

i. A licensed treatment, storage or disposal facility pursuant to the Resource Conservation and Recovery Act ☐ Yes ■ No

ii. A designated remediation site pursuant to the Comprehensive Environmental Response, Compensation and Liability Act, commonly known as Superfund Act. ☐ Yes ■ No

For MWRD Use Only
Date submitted

7. Indicate whether your facility has the following:

a. A Spill Prevention, Control and Countermeasure (SPCC) Plan ■ Yes ☐ No
Completion of SPCC Plan with slug control
b. A Slug Control Plan in process of completion ■ Yes ☐ No

c. Any underground storage tanks/facilities - Liquid holding tanks in basement level of building, not underground storage tanks. ☐ Yes ■ No

d. Does (or will) this facility use or store any toxic organics listed under the total toxic organic (TTO) standard of the categorical pretreatment standards published by the USEPA? ☐ Yes ■ No

If you answered yes to any of the above questions, attach a copy of the applicable plan or documentation.

8. Is this DAR for:

a. A new facility subject to categorical pretreatment discharge standards? ☐ Yes ☒ No

b. An existing facility now subject to new categorical pretreatment discharge standards? ☐ Yes ■ No

c. An existing facility seeking to revise the discharge limits contained in its current Discharge Authorization (DA)? ☐ Yes ■ No

If you answered yes to any of the above questions, submit a Final Compliance Report (RD-114) to the Metropolitan Water Reclamation District of Greater Chicago (District) within 45 days of the date of the issuance of your DA. The RD-114 contains its own sampling and reporting requirements which must be completed separately.

For MWRD Use Only
Date submitted

SECTION E – CERTIFIED FACILITY DIAGRAMS

A Professional Engineer registered in the state of Illinois must certify all below requested diagrams of your facility (see definition of the term "Facility" in *Instructions*).

1. Building and Property Layout of Facility

Provide a clean & legible diagram, drawn to scale with directional orientation, showing the following details for the facility:

- Property boundaries See Attachment B (Figures 1-3).
- Adjacent roadways and streets
- All structures and buildings, including above and below ground storage tanks
- Storm sewer lines, showing direction of flow and connection to local sewer
- Sanitary sewer lines, showing direction of flow and connection to local sewer, including blind ties and bypasses, if any
- Unit processes of industrial operations
- Pretreatment system unit processes
- Intake water meters and submeters, indicating which process each meter feeds
- Discharge flow meters, indicating processes contributing to each meter
- Floor drains and storm drains, including direction of flow
- Designated end-of-process and final discharge sampling locations

2. Process Flow Diagram (provide separately)

For each unit process, provide a clean and legible diagram, showing the flow of materials, products, water, and wastewater from the start of the activity to its completion, showing all unit processes. Indicate which processes use water and which generate wastestreams. Include the average daily volume and maximum daily volume of each wastestream (new facilities may estimate). If estimates are used for flow data, indicate this on the diagram. Number each unit process having wastewater discharges to the local sanitary sewerage system. Use these same reference numbers when showing all unit processes in the Building and Property Layout diagram in Item 1 of this Section, and also when completing Section C, Item 9 of this application.

See Attachment B for flow diagram (Figure 4)

3. Pretreatment System Flow Diagram (provide separately)

Provide a clean and legible schematic flow diagram, showing all pretreatment devices and unit processes indicated under Section D, Item 3 of this application. Number each unit process. Use these same reference numbers when showing all unit processes in the Building and Property Layout diagram in Item 1 of this Section.

See Attachment B for flow diagram (Figure 4)

4. Additional Documents

If available, all layouts/diagrams provided under this Section should be accompanied by electronic copies in .pdf or .dwg file format.

For MWRD Use Only
Date submitted

SECTION F – CERTIFICATION STATEMENTS

1. Provide responses to the following questions.

a. Has the local sanitary sewer system that serves your facility been modified to accommodate flows from your operations:

i. prior to start-up of your industrial operations? ■ ■ No

ii. after start-up of your industrial operations? ☐ Yes ☒ No

iii. prior to start-up of your pretreatment system(s)? ☐ Yes ☒ No

iv. after start-up of your pretreatment system(s)? ☐ Yes ☒ No

b. Do(es) the sewer plan(s) you submitted in response to Section E, Item 1 above plainly and clearly identify all sewers into which wastewaters from your industrial process(es) and/or pretreatment system(s) enter(s) prior to discharge to the local sanitary sewer system? ■ Yes ☐ No

c. Do you have any blind ties into the local sanitary sewer system through which wastewater from your facility's industrial process(es) or pretreatment system(s) is discharged? ☐ Yes ■ No

d. Are there any bypasses in your sewer system that will permit the discharge of wastewaters to the local sanitary sewer system without flowing through your facility's metering system or through the sampling chamber/manhole identified in this DAR as the official sampling station? ☐ Yes ■ No

2. Are Sewage and Waste Control Ordinance (SWCO)/federal pretreatment standards being met?
■ Yes ☐ No No pretreatment standards applicable.

If pretreatment standards are not being met, attach a completed Compliance Schedule (RD-112). The RD-112 must be certified by an authorized agent of your company, notarized, and must contain major milestone dates for implementation of remediation measures. In addition, the RD-112 must contain a final compliance date acceptable to the District, by which the company will attain full compliance with the District's SWCO.

3. List and number all federal, state and local environmental control permits held by the facility:

None presently, but applications submitted to Bureau of Land (anaerobic composting operations), Bureau of Air (lifetime operating permit), and City of Chicago (recycling permit, air equipment permit, and liquid waste facility).

For MWRD Use Only
Date submitted

4. Felony Convictions/Past Environmental Performance

Complete this Item if your company, including any company officers or supervisory personnel, has ever been convicted of a felony or has ever been named as a defendant or respondent in any civil matter, including any administrative proceeding, for allegedly violating any environmental law of the United States of America, the state of Illinois, the county of Cook, and/or any local public entity, including the District. For each such instance, provide the case name and number, date of initial filing, the name of the presiding court or administrative body, and the current status of the proceedings or final disposition if the matter has been resolved.

5. Authorized Representative's Certification

I, the undersigned, certify under penalty of law that I am the authorized representative of the entity submitting this DAR to the District for approval and, in such capacity, am able to, and do, attest to the truth and accuracy of the responses to Items 1-4 in this Section. I further certify that this DAR and all of its attachments were prepared under my direction or supervision in accordance with a system designed to assure that qualified personnel properly gather and evaluate the information contained in these documents. Based on my inquiry of the person or persons who manage the system, or those persons directly responsible for gathering the information, I certify that the information contained in this DAR is true, accurate and complete to the best of my knowledge and belief. I am aware that there are significant penalties for submitting false information in this document, including the imposition of fines and/or imprisonment and the suspension or revocation of the facility's DA.

Erika Allen
Name

President
Title

Signature

11/2/2021
Date

(708) 792-0649
Telephone

Subscribed and sworn to before me this 2nd day of November 2021

Notary Public

(Notary Seal)

"OFFICIAL SEAL"
HUBERT NEWKIRK
Notary Public, State of Illinois
My Commission Expires 2/16/2022

My commission expires 2-16-2022

For MWRD Use Only
Date submitted

6. Professional Engineer's Certifications

I certify under penalty of law that I am a Professional Engineer currently licensed to practice engineering in the state of Illinois and to the following:

A. Wastewater Pretreatment System

The pretreatment facilities, as described in this document for the facility described herein, have been implemented or will be implemented and are adequate to handle the discharge volume in terms of both hydraulic capacity and ability to meet the pollutant concentration limits, discharge prohibitions and performance criteria of all applicable laws and regulations of the United States of America, the state of Illinois, the county of Cook, the Metropolitan Water Reclamation District of Greater Chicago, and any local public entity with jurisdiction.

In the case where there are no pretreatment facilities provided, the discharge from the facility will meet the pollutant concentration limits, discharge prohibitions and performance criteria of all applicable laws and regulations of the United States of America, the State of Illinois, the County of Cook, the Metropolitan Water Reclamation District of Greater Chicago, and any local public entity with jurisdiction.

B. Information Contained in this DAR

I have reviewed this document and all attachments. The sampling and analysis conducted are representative of normal work cycles and expected pollutant discharge to the sewer system. Based on my inquiry of the person or persons who prepared this document, or those persons directly responsible for gathering the information contained in this document, the information contained in this document is, to the best of my knowledge and belief, accurate and complete. I am aware that there are significant penalties for submitting false information in this document, including the imposition of fines and/or imprisonment and the suspension or revocation of the facility's DA.

Richard J. Vamos
Name of Professional Engineer

Senior Project Engineer
Title

Signature

Nov 4, 2021
Date

(847) 996-3577
Telephone

062-049136
Professional Engineer's Registration Number

11/30/2021
Expiration Date

DAI Environmental, Inc.
Professional Engineer's Employer

27834 N. Irma Lee Circle
Address

Lake Forest, IL 60045
City, State, Zip

For MWRD Use Only
Date submitted

ATTACHMENT A
FACILITY PROCESS/
WASTEWATER GENERATION NARRATIVE

Section B.4 Facility and Process General Description

Facility Location

An 8.905± acre property addressed as 650 West 83rd Street in Chicago and owned by Green Era Educational NFP is being developed into a food waste (solid and liquid) recycling (composting) facility (Green Era Renewable Energy and Urban Farming Campus). The facility and associated equipment will be owned and operated by Green Era 83rd Street, LLC. Figure 1 is a topographical Site Location Map (see Attachment B).

The facility is being built in the Auburn Park neighborhood of Chicago within an industrial area bound by residential neighborhoods. The facility is bound by Aabbitt Adhesives, then a ComEd substation to the north; by South Wallace Street, then Diamond Waste Recycling or a vacant lot used for truck parking to the east: by West 83rd Street, then a church or Mahalia Jackson Park to the south; and by Metra railroad tracks, then a residential neighborhood to the west. Figure 2 (see Attachment B) is an aerial view of the development property and surrounding area.

Facility General Description

Development of the property will include the construction of two (2) buildings, two (2) aboveground storage tanks (ASTs), and the erection of approximately four (4) "hoop houses" (i.e., simple greenhouse structures) that will be used to perform indoor urban farming within the "Urban Agriculture Area." Figures 3-3A provide a site plan and site detail, respectively, with pertinent information (e.g., buildings, utilities, process equipment, etc.).

The facility will be a food waste recycling facility developed to create commercial compost and biomethane for injection into the local natural gas utility system. The facility will process food waste from the greater Chicago metro-area and surrounding Cook County. The majority of waste processed at the facility is expected to be generated within a 30-mile radius of the facility, but may be taken from an approximate 75-mile radius (which would include other "collar" counties such as Lake, DuPage, and Will Counties).

Two (2) forms of food-based waste are to be received: solid food waste and pumpable liquid commercial food waste. Compostable landscape waste will not be accepted by this facility for digestion. The solid food waste that will be accepted by the facility includes food waste from food processors (dairies, bakeries, potato chip plants, etc.), grocery stores, and restaurants in the Chicago metro-area. The facility will also be equipped to accept bagged kitchen waste from neighborhood curbside collection programs, as well as packaged food waste. Packaged food waste is any organic food waste that is contained within consumer packaging (e.g., beverages or soup in cans, milk or juices in plastic jugs, bottles, or cartons, and single serving condiment packs). Packaged food waste will be separated at the facility, while most accepted food will be source-separated (i.e., any food waste that has been pre-sorted from other waste by the customer or waste generator).

Pumpable commercial food waste includes whey, liquid ice cream mix, end of batch soups, and sauces and syrups. Fats, oils, and grease (FOG) collected from grease traps at restaurants and food processors will also be accepted. The facility will receive pumpable food waste in closed tankers. Included in what is proposed to be accepted by the facility are wash/rinse waters generated from

the rinsing (with water) of tanker trucks or railcar tankers used to transport food products. As such, it is our opinion that such wash/rinse waters, composed of rinse water and food products, is food waste.

The facility has been designed to receive and treat 80,000-tons per year of food waste, 50,000-tons/year of solid food waste and 30,000-tons/year (7,195,000-gallons/year) of pumpable food waste. Typically, the facility will receive eight (8) to 16-loads/day of solid food waste via compactors, roll-off boxes, and dump or walking floor trailers (averaging 12-tons/load) and five (5) to 8-loads/day of pumpable food wastes via tanker trucks (averaging 13-tons/truck). Palletized, packaged, food products will also be accepted, typically two (2) loads per week. Typical operations (i.e., when food waste is imported and preliminarily processed) will be from 7:00-17:00, Monday-Saturday. It is possible the facility may periodically operate on Sundays.

The method of composting at this facility will be via a conventional wet anaerobic digestion system, with most operations conducted inside an approximately 35,000-ft^2 Processing Building or inside the two (2) large ASTs located to the north of the Processing Building. Urban farming using some of the finished product generated during anaerobic digestion will be performed within the "Urban Agriculture Area" inside hoop houses (i.e., simple greenhouse structures). The facility will be continuously monitored, with anaerobic digestion operations occurring in the digester tank constantly (24-hrs/day, 7-days/wk).

The below discussion provides a detailed narrative description of the anaerobic digestion process, which includes water use/wastewater generation and discharge. The biogas handling process that generates biomethane for injection into the natural gas utility is also discussed for completeness of understanding of facility operations, but no water use/wastewater discharge is associated with the biogas handling. The only other wastewater associated with the facility is from water domestic use/discharge. Figure 4 depicts the combined facility process flow diagram, including water use/wastewater discharge.

Anaerobic Digestion Process Description (Water Use/Wastewater Generation and Discharge)

Composting will be performed via a conventional wet anaerobic digestion system, with most operations conducted inside the approximately 35,000-ft^2 Processing Building or inside of the two (2) large ASTs located to the north of the Processing Building. The large 1,680,000-gallon anaerobic digester (AST, 75.66-ft diameter by 53-ft tall with 9-ft domed roof) located to the north of the Processing Building, is where the actual "in-vessel" composting will occur. The adjacent 320,000-gallon tank (AST, 33.63-ft diameter by 53-ft tall with 9-ft domed roof) will serve as an equalization and feedstock "conditioning" tank in advance of being pumped to the digester tank.

Two (2) forms of food-based waste will be received by the facility: non-pumpable solid food waste and pumpable liquid commercial food waste. The facility will receive solid food waste via compactors, roll-off boxes, and dump or walking floor trailers. Packaged food products will also be accepted, with typical receipt of two (2) palletized loads per week. Tanker trucks will deliver pumpable food wastes. All food waste will be normally processed the same day it is received.

Solid food waste received by the facility will be unloaded/tipped into one (1) live-bottom receiving bunker. Trucks delivering solid food waste will back into the receiving bay through the roll-up overhead door, reversing to the end of the main floor inside of the Processing Building. Solid food waste is subsequently tipped from the main floor into the live-bottom receiving bunker located in the basement of the Processing Building. A simple garden hose will be available for post-tipping washdown, with collected water captured by trench floor drains that connect to sump pits (collected water subsequently transferred to sub-grade holding tanks). The live-bottom receiving bunker is designed to process approximately 90-yds^3 (between 2 and 3 truckloads). Tipping space will be provided on the main floor of the Processing Building to hold additional loads during busy periods if the bunker is full (i.e., greater than the 90-yd^3 capacity). Tipping on the floor will be accomplished by trucks reversing through the two (2) roll-up overhead doors top the adjacent south of the receiving bay. Packaged food products will be manually added into the bunker by facility personnel.

Pumpable food wastes will be unloaded into two (2) 30,000-gallon holding tanks (T-050A and T-050B) located in the basement of the Processing Building. Tanker trucks will pull onto the main floor inside the north end of the Processing Building for subsequent gravity discharge into the two (2) 30,000-gallon holding tanks. Water collected by the in-building floor drains during post-unloading washdown of trucks/containers will be transferred into the holding tanks.

From the live-bottom receiving bunker, solids will be transferred at an average of 28-yds^3/hr (12-tons/hr) via a multi-step inclined, enclosed shaftless screw auger conveyor into one (1) Wackerbauer TM 75 separation mill located on the main floor of the Processing Building. The separation mill is expected to be able to process the daily solid food waste intake within a 2-shift (16-hrs) work period. The separation mill will be used to pulp the organic waste fraction and remove non-digestible materials (e.g., glass or packaging). The separation mill is a specialized type of hammer mill. The hammers rotate inside of a chamber, separating packaging and pounding the solid food waste (i.e., pulping). Material rejected from the separation mill is conveyed away by a multi-step belt conveyor system to the two (2) 40-yd^3 compactors located inside the Processing Building on the main floor for subsequent off-site disposal at a licensed municipal waste landfill. Liquids from the two (2) 30,000-gallon storage tanks will be transferred into the separation mill via progressive cavity pumps and combined with the pulped solid waste to form a homogenized slurry (approximately 14% solids).

The homogenized slurry created in the separation mill will be transferred via auger conveyor into one (1) slope-bottom grit hopper (S-065) with 5,500-gallon holding tank (T-065A) located in the basement of the Processing Building. The grit hopper is used to allow for the settling of dense grit such as stone, sand, glass, organic calcium (shells and bones), and larger diameter packaging. Settled solids will be removed from the grit hopper by inclined auger conveyor that will deposit the materials into a holding bin for subsequent transfer into the two (2) 40-yd^3 compactors located inside the Processing Building on the main floor. Any liquids will drain from the inclined screw conveyor back into the grit hopper.

The homogenized slurry with settled solids removed (referred to as feedstock) will be pumped (approximately 80,000-tons/year, 55,000-gallons/day) from the grit hopper through piping into the one (1) 320,000-gallon Biomass Equalization Tank (T-100) located to the north of the Processing

Building. The Biomass Equalization Tank is used to "condition" (hydraulic buffering and batch equalization) the feedstock. Hydrolysis and acidification (initial steps of the anaerobic digestion process) will begin in the Biomass Equalization Tank, breaking down the complex carbon chains of the food waste into simple volatile fatty acids (e.g., acetic acid, butyric acid, and propionic acid). A center-mounted agitator mounted to the top of the tank will limit stratification.

The "conditioned feedstock" is then transferred via pump and piping from the Biomass Equalization Tank to the one (1) 1,680,000-gallon Digester Tank (T-105) located to the north of the Processing Building and adjacent to the Biomass Equalization Tank. The pumps utilized for transfer are located inside the basement of the Processing Building (i.e., feedstock does not flow directly from the Equalization Tank to the Digester Tank, but runs into and back out of the Processing Building). Transfers occur in set intervals, usually once per hour. The volume of material transferred will be determined by the operator to optimize throughput and biogas production. The anaerobic digestion process is carried out in the Digester Tank. Other than the slow, continuous mixing, all operations within the digester tank are carried out by the anaerobic bacteria. To maintain the optimum temperature in the Biomass Equalization Tank and the digester AST, two (2) natural gas-fired boilers operated on-site will warm a glycol/water solution utilized for non-contact heat transfer via double pipe heat exchanger. Heating will also be performed (when needed) when transferring conditioned feedstock from the Biomass Equalization Tank to the Digester Tank.

The liquid product of anaerobic digestion (referred to as digestate) will be pumped from the Digester Tank to one (1) 30,000-gallon holding tank (T-205) located in the basement of the Processing Building (adjacent to tanks T-050A and T-050B). Holding tank T-205 is used for the temporary storage of digestate before the dewatering step. Prior to discharge into T-205, the digestate will pass through a Huber 290 Strainpress® (S-205), a specialized in-line screw press that removes non-digestible materials not previously captured by the separation mill or grit hopper (e.g., pieces of paper or plastic packaging). The screened digestate will drop from the screw press located on the 2nd floor mezzanine in the Processing Building into tank T-205 via piping; non-digestible materials screened from the digestate will drop into the belt conveyor that runs to the two (2) 40-yd^3 compactors located inside the Processing Building on the main floor.

Digestate will be pumped from the 30,000-gallon holding tank for dewatering in one (1) 2-stage belt (Y-211) press located on the main floor of the Processing Building. During transfer of the digestate to the belt press, polymer will be injected into the feed pipe (i.e., in-line addition) to promote formation of flocculation. Undiluted polymer is stored in a 14,000-gallon sub-grade concrete tank (T-210A) located in the basement of the Processing Building; the polymer is diluted in a 2,000-gallon AST (T-210B) located above T-210A on the main floor of the Processing Building. After in-line mixing, digestate is distributed into a 200-gallon tank (T-211) to allow for approximately 2-minutes of flocculation before continuing onto the first stage of the belt press (the gravity belt). The gravity belt allows free water to gravity drain, thickening the digestate. The thickened digestate then moves into the pressure section, where two (2) filter belts progressively squeeze the thickened digestate to further remove free water. The dewatering process creates a "cake" that is approximately 20 to 25% total solids at a rate of 4-tons per hour. This cake is considered finished product that will typically be directly loaded via multi-step auger conveyor system into trucks for off-site shipment and use by other regional composters or agricultural

entities. Some of the finished product will be used on-site by the Urban Growers Collective within the urban farming operations inside the hoop houses or approximately two (2) semi-loads (approximately 44-yd^3) per day of finished product will be transported off-site or used in urban farming operations on-site. If excess finished product is generated that cannot be immediately utilized on-site or shipped off-site, the material will be temporarily stockpiled on the concrete floor inside the approximately 5,600-ft^2 Compost Loading and Handling Building (Pole Barn). Trucks will enter Pole Barn for indoor loading and exit the opposite side (i.e., drive through operation). The Pole Barn will also be used for the stockpiling of wood chips and coir (coconut husks) obtained from the City of Chicago or commercial landscaping companies for mixing with finished product. All mixing and loading will take place inside the Pole Barn building.

All water removed by the 2-stage belt press (referred to as filtrate) will be captured by the trench floor drain and sump located in the dewatering area on the main floor of the Processing Building. Recovered water will be transferred via pump from the sump pit into two (2) 30,000-gallon tanks (T-250A and T-250B) located in the basement of the Processing Building. The filtrate will be discharged as process wastewater into the municipal combined sewer system via on-site manhole (Outfall 1A) under an approved Discharge Authorization from the Metropolitan Water Reclamation District of Greater Chicago (MWRD). No "pretreatment" of this wastewater (i.e., the filtrate) is expected to be conducted, or necessary.

Processing Building Air Odor Control (Associate Process to Anaerobic Digestion)
(No Water Use/Wastewater Generation and Discharge)

To address potential odors and any regulated contaminants in the air space within the Processing Building, the building will be maintained at a slight negative pressure and the emissions from the building will be routed via the HVAC system through two (2) control devices: an ionization reactor (a.k.a., ionizer cannon) and an activated carbon guard bed. Two (2) streams of air will be drawn from the Processing Building, one (1) from the southern portion/dewatering area and one (1) from the northern portion/feedstock receiving area. All of this building air will pass through banks of ionization reactor units installed within the building air duct system. In addition to the HVAC system, air vented from the sub-grade holding tanks, the separation mill, and the slope-bottom grit hopper will also be treated by the odor control devices. The air is drawn from the building and sub-grade tanks by two (2) air handlers (i.e., exhaust fans) located outside the west wall of the Processing Building. From the air handlers, air will pass through two (2) 40-ft modified shipping containers, the first with the ionizer cannon installed and the second loaded with 16 activated carbon cells ("carbon guard bed"), before exiting the odor treatment system via vertical stack. There will be no water use or wastewater generation and discharge as a result of this air pollution control process.

Biogas Handling Process Description (Associate Process to Anaerobic Digestion)
(No Water Use/Wastewater Generation and Discharge)

Biogas (consisting primarily of methane) will be produced by the bacteria during the anaerobic digestion process at an estimated generation rate of 400-scfm (AVG) 500-scfm (MAX). The gas will collect within the headspace (top) of the Digester Tank, removed by piping connecting the

roof of the tank to the biogas handling equipment. Additionally, any gases produced in the Biomass Equalization Tank, primarily Carbon dioxide and trace levels of Hydrogen sulfide, will be blended with the biogas generated in the digester (by piping running from the Biomass Equalization Tank roof to the Digester Tank roof).

Biogas is typically transferred to the pressure swing adsorption (PSA) system, which is the upgrading equipment that converts biogas to biomethane. The upgrading system consists of several equipment skids situated to the north of the Processing Building and east of the Digester Tank. The first equipment skid of the biogas upgrade process includes a compressor, resulting in a pressure of 150-psig and sour water condensation. The second skid consists of the PSA biogas upgrading system that will be used to produce pipeline quality biomethane from the digester biogas. Simply put, the PSA system "cleans up" the biogas by removing Carbon dioxide, Hydrogen sulfide, and other trace gases, producing a concentrated biomethane (the product) and "tail gas" (i.e., the non-methane gases). The PSA system has a maximum biogas input capacity of 400-scfm, producing biomethane at a rate of 226-scfm and tail gas at a rate of 155-scfm.

The biomethane produced in the PSA then passes through another compressor unit and a regulator before being injected back into the natural gas distribution piping. Any excess biomethane that cannot be transferred into the distribution piping (assumed to occur only 120 to 240-hrs/year) will be burned via the on-site flare (F-370), located within the same general location as the biogas upgrading equipment. (The scenario whereby biomethane is burned in the flare will rarely occur, as biomethane will not be produced if the public utility cannot or will not accept the biomethane, and biogas will be routed directly to the flare instead.) The tail gas discharge from the PSA system will be sent to the thermal oxidizer (F-330), situated adjacent to the flare.

When necessary due to system upsets, maintenance, or when the rate of biogas generation exceeds the design maximum capacity of the PSA system, biogas that cannot be transferred to the biogas upgrading process will be routed directly to the flare. The flare is designed to burn up to a maximum flow rate of over 800-scfm of biogas, though the digester is only capable of generating a maximum flow rate the 500-scfm. As such, the flare is designed to handle the maximum flow rate of biogas the digester can generate (i.e., a 100% by-pass of the upgrading equipment as necessary). There will be no water use or wastewater generation and discharge as a result of this air pollution control process.

Sections C.5-C.9 Water Intake/Discharge/Treatment

Domestic water will be obtained from the City of Chicago (account numbers 1347789-699385 and 1347789-699386) via tap into the water main located below West 83rd Street. A single 8-in service line runs underground from the water main to the aboveground valve box located near the southwest corner of the facility. The underground piping transitions from below to aboveground inside the valve box, splitting into two (2) lines, a 6-in metered domestic service feed and an 8-in fire water feed. The domestic service feed is equipped with a 3-in diameter meter (Badger Meter, serial 190096455). The 8-in fire water feed includes a metering by-pass line equipped with a 5/8-in meter (Badger Meter, serial 190150616). Both feeds transition back underground after the meters and inside the valve box, run along the western edge of the 35,000-ft^2 processing building, entering through the approximate center of the west wall.

Municipal water intake will be utilized for domestic use (i.e., sinks, toilets, etc.), polymer makeup (for improved solids removal during post-digestion dewatering), and equipment/facility wash water. Four (4) operations conducted by the facility will account for the equipment/facility wash water generation:

- Wash down following unloading of food waste containers, trucks, and tankers (pre-digestion);
- Rinsing of separated grit prior to transfer to garbage compactors (pre-digestion);
- Dewatering belt press clean rinsing (post-digestion); and
- General housekeeping.

The estimated water use volumes are as follows:

- Domestic use – 385-gallons/day average; 575-gallons/day maximum
- Polymer makeup – 13,500-gallons/day average/maximum
- Wash water – 12,000-gallons/day average; 12,800-gallons/day maximum
    - Pre-digestion and housekeeping – 7,200-gallons/day average/maximum
    - Post-digestion – 4,800-gallons/day average; 5,600-gallons/day maximum

All City of Chicago water intake will discharge to the MWRD. The combined total average discharge volume to the MWRD is 60,385-gallons/day, consisting of the 385-gallons domestic wastewater and 60,000-gallons of combined process wastewater. Maximum discharge volume is estimated as 108,575-gallons/day, 575-gallons domestic wastewater and 108,000-gallons of combined process wastewater.

The estimated daily discharge to the MWRD will exceed the volume of water intake. The excess volume comes from the imported liquid food waste, with the wastewater ultimately generated by the belt press dewatering step (i.e., filtrate). The filtrate and all wash down water will be collected in the two (2) 30,000-gallon holding tanks (T-250A and T-250B). This combined process wastewater will be batch released. Average discharge will be 60,000-gallon batches (i.e., the combined volume of the below-grade holding tanks); maximum process wastewater discharge would be 108,000-gallons (maximum potential volume generated by 24-hrs operation of the belt

press at maximum capability). Batch discharge may be performed at any time and on any day. Batch discharge will occur as needed, expected daily. No regulatory pretreatment of this wastewater (i.e., the filtrate) is required, and no form of treatment is expected to be conducted or necessary to maintain compliance with Appendix B discharge limitations. The two (2) 30,000-gallon holding tanks release into a 4-in diameter force main that exits the Processing Building at the western portion of the southern wall.

Additional discharge from the facility will result from continuous discharge of domestic wastewater at an estimated 385-gallons average, 575-gallons maximum. This minimal additional volume will not be collected in the 30,000-gallon holding tanks, but will be directly discharged into the gravity sanitary sewer that exits the Processing Building at the approximate center of the southern building wall and then flows to a manhole (where the 4-inch diameter process wastewater force main also discharges into to create the combined discharge flow).

The facility combined wastewater then flows through on-site sewers before discharging into the existing combined sewer system located below West 83rd Street to the south of the facility. In lieu of sampling at the final on-site manhole (located east of the West 83rd Street entrance drive near the south-center property boundary), the facility is proposing to utilize the metering manhole on the west side of the West 83rd Street entrance drive (39.33-ft upstream) as designated sampling point (i.e., metering manhole is Outfall 1A instead of the final on-site manhole). Collection of discharge samples at the metering manhole will still include the facility combined wastewater (no blind ties or other connections exist subsequent to the metering manhole), therefore the metering manhole will be representative of combined facility discharge. Additionally, the final on-site manhole is not adequately sized to install a proper flow metering device. There are no blind connections to the final manhole. In other words, the flow in final manhole will always be exactly the same flow in terms of volume and characteristics as the flow through the final manhole.

In order to accurately monitor the wastewater discharge rage, an 8-in Palmer-Bowlus flume will be installed within the metering manhole (Outfall 1A). The discharge volume will be monitored by the flow meter (manufacturer/model to be determined but likely manufactured by Teledyne ISCO), mounted inside of the metering manhole. As a flow-based meter used to directly tally discharge, the meter and flume will be calibrated monthly and an annual calibration/certification will be completed by a factory-authorized representative, as required.

Discharge samples will be collected from the metering manhole during collection of semi-annual compliance and User Charge (annual at a minimum) sampling. Please note, the facility will additionally install a separate in-line flow meter and auto sampler inside the Processing Building at a point before the processing wastewater mixes with any sanitary wastewater. This auto sampler will be used for process monitoring and control purposes, not MWRD sampling requirements.

ATTACHMENT B
FIGURES

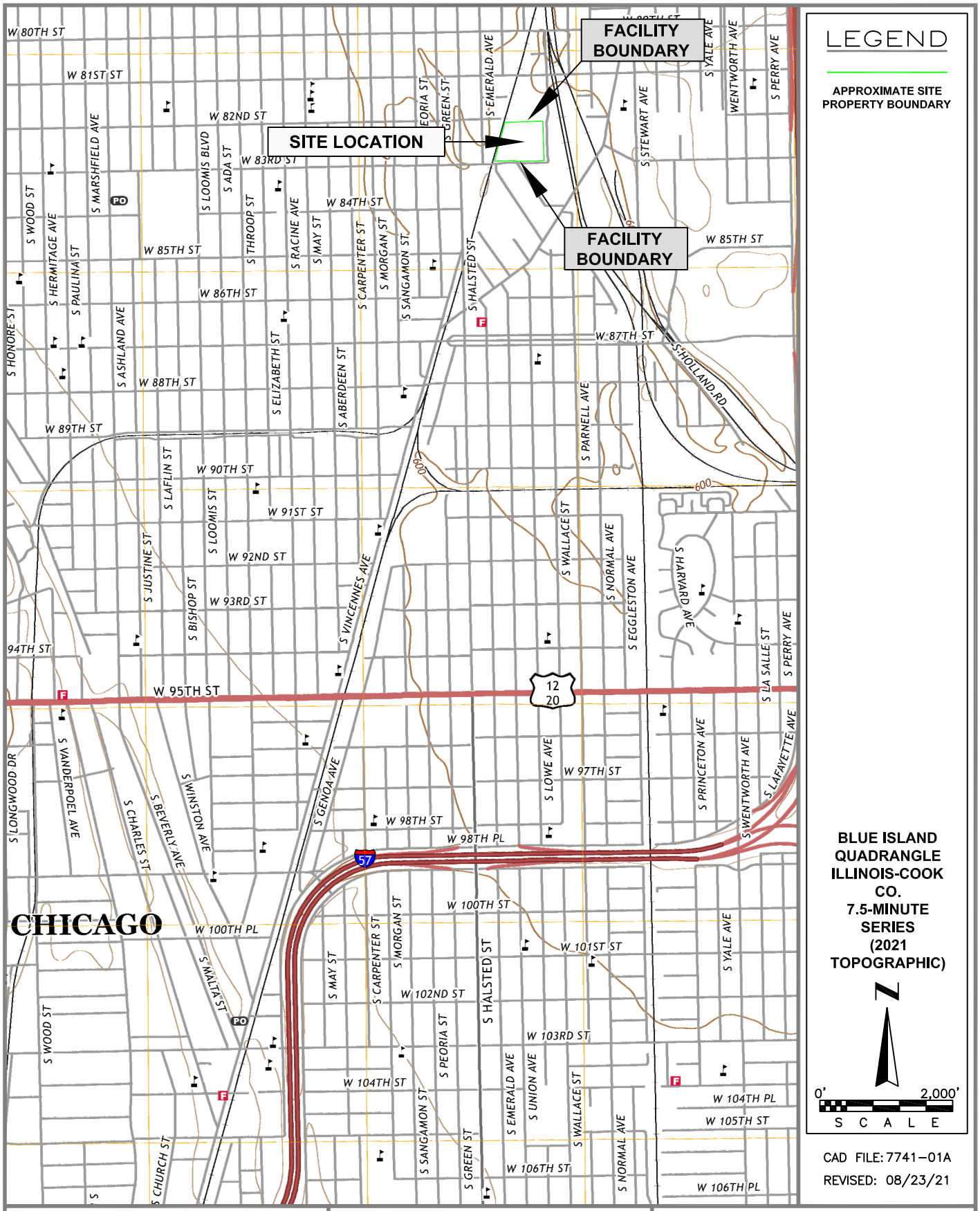

LEGEND

APPROXIMATE SITE PROPERTY BOUNDARY

BLUE ISLAND QUADRANGLE ILLINOIS-COOK CO. 7.5-MINUTE SERIES (2021 TOPOGRAPHIC)

N

0' 2,000'

S C A L E

CAD FILE: 7741-01A

REVISED: 08/23/21

DAI ENVIRONMENTAL

GREEN ERA RENEWABLE ENERGY AND URBAN FARMING CAMPUS
650 WEST 83RD STREET
CHICAGO, ILLINOIS

FIGURE 1
SITE LOCATION MAP

CAD FILE: 7741-14 (MWRD)
REVISED: 10/15/21

ENVIRONMENTAL

GREEN ERA RENEWABLE ENERGY AND URBAN FARMING CAMPUS
650 WEST 83RD STREET
CHICAGO, ILLINOIS

FIGURE 2
AERIAL VIEW OF SITE AND SURROUNDING PROPERTY USAGE
(MAY 2021 AERIAL TAKEN GOOGLE MAPS)

AABBITT ADHESIVES, INC.

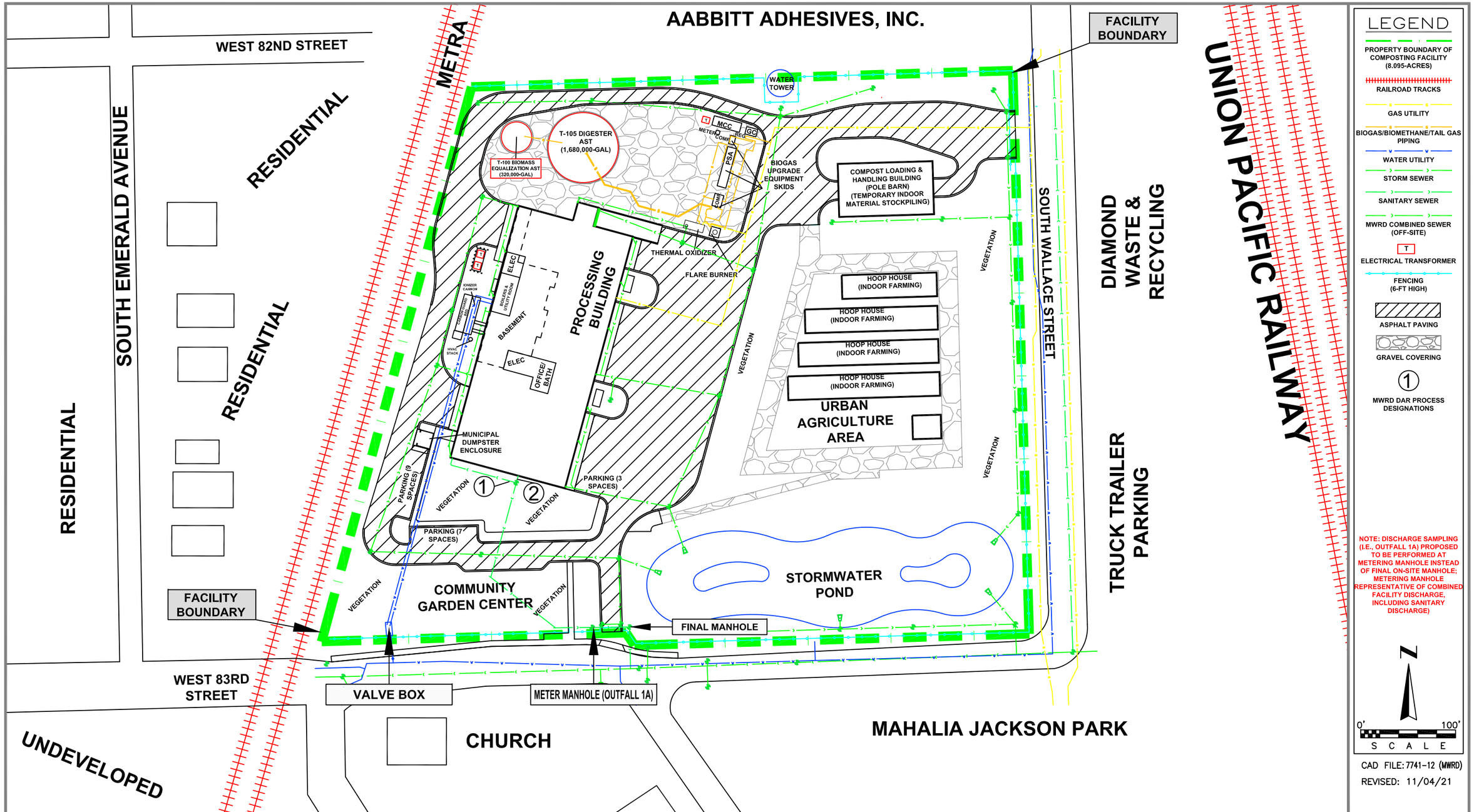

LEGEND

- PROPERTY BOUNDARY OF COMPOSTING FACILITY (8.095-ACRES)
- RAILROAD TRACKS
- GAS UTILITY
- BIOGAS/BIOMETHANE/TAIL GAS PIPING
- WATER UTILITY
- STORM SEWER
- SANITARY SEWER
- MWRD COMBINED SEWER (OFF-SITE)
- T — ELECTRICAL TRANSFORMER
- FENCING (6-FT HIGH)
- ASPHALT PAVING
- GRAVEL COVERING
- ① — MWRD DAR PROCESS DESIGNATIONS

NOTE: DISCHARGE SAMPLING (I.E., OUTFALL 1A) PROPOSED TO BE PERFORMED AT METERING MANHOLE INSTEAD OF FINAL ON-SITE MANHOLE; METERING MANHOLE REPRESENTATIVE OF COMBINED FACILITY DISCHARGE, INCLUDING SANITARY DISCHARGE)

N

0' 100'
S C A L E

CAD FILE: 7741-12 (MWRD)
REVISED: 11/04/21

DAI ENVIRONMENTAL

GREEN ERA RENEWABLE ENERGY
AND URBAN FARMING CAMPUS
650 WEST 83RD STREET
CHICAGO, ILLINOIS

FIGURE 3
SITE PLAN

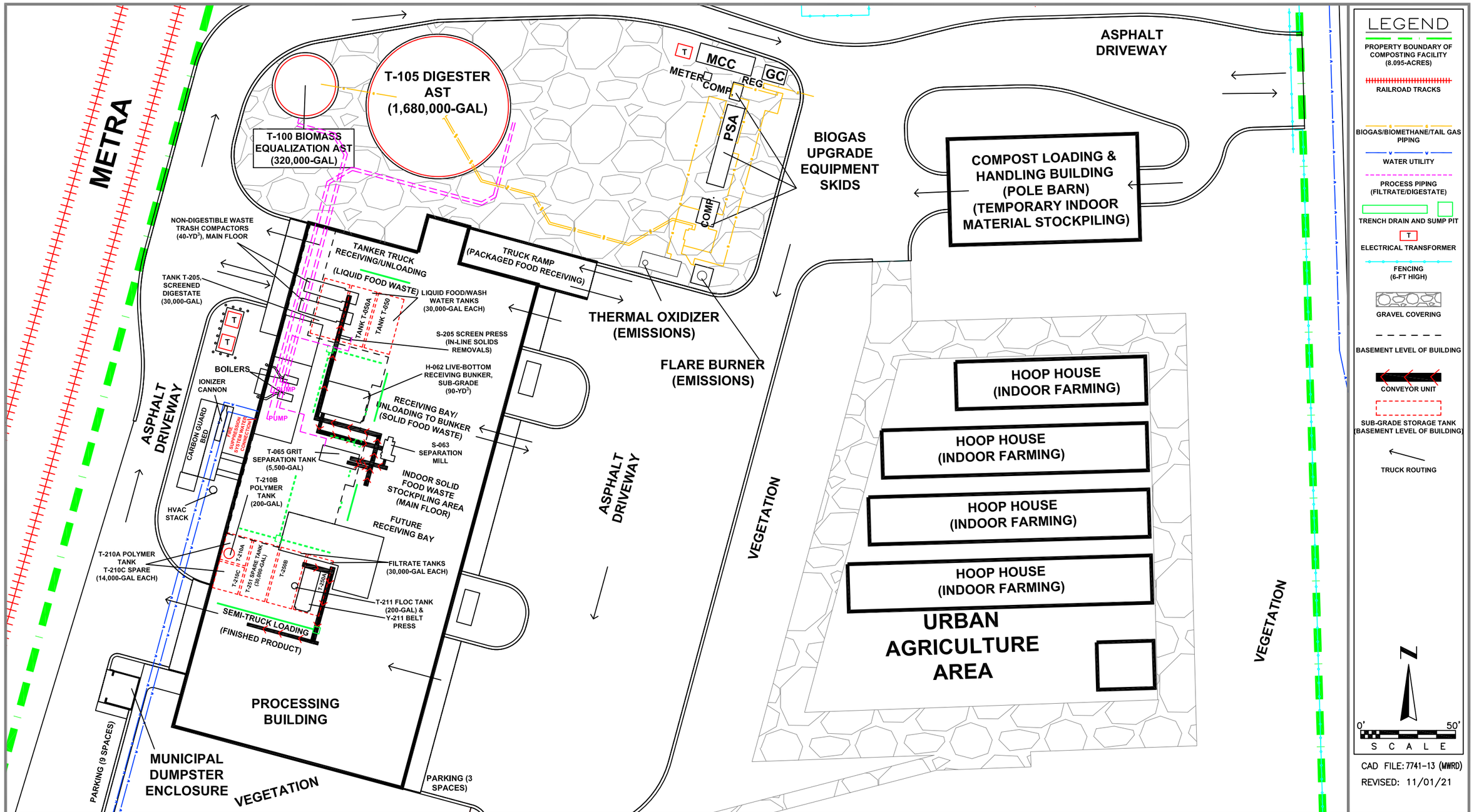

DAI ENVIRONMENTAL

GREEN ERA RENEWABLE ENERGY AND URBAN FARMING CAMPUS
650 WEST 83RD STREET
CHICAGO, ILLINOIS

FIGURE 3A
SITE DETAIL SHOWING
PROCESS OPERATIONS AND EQUIPMENT

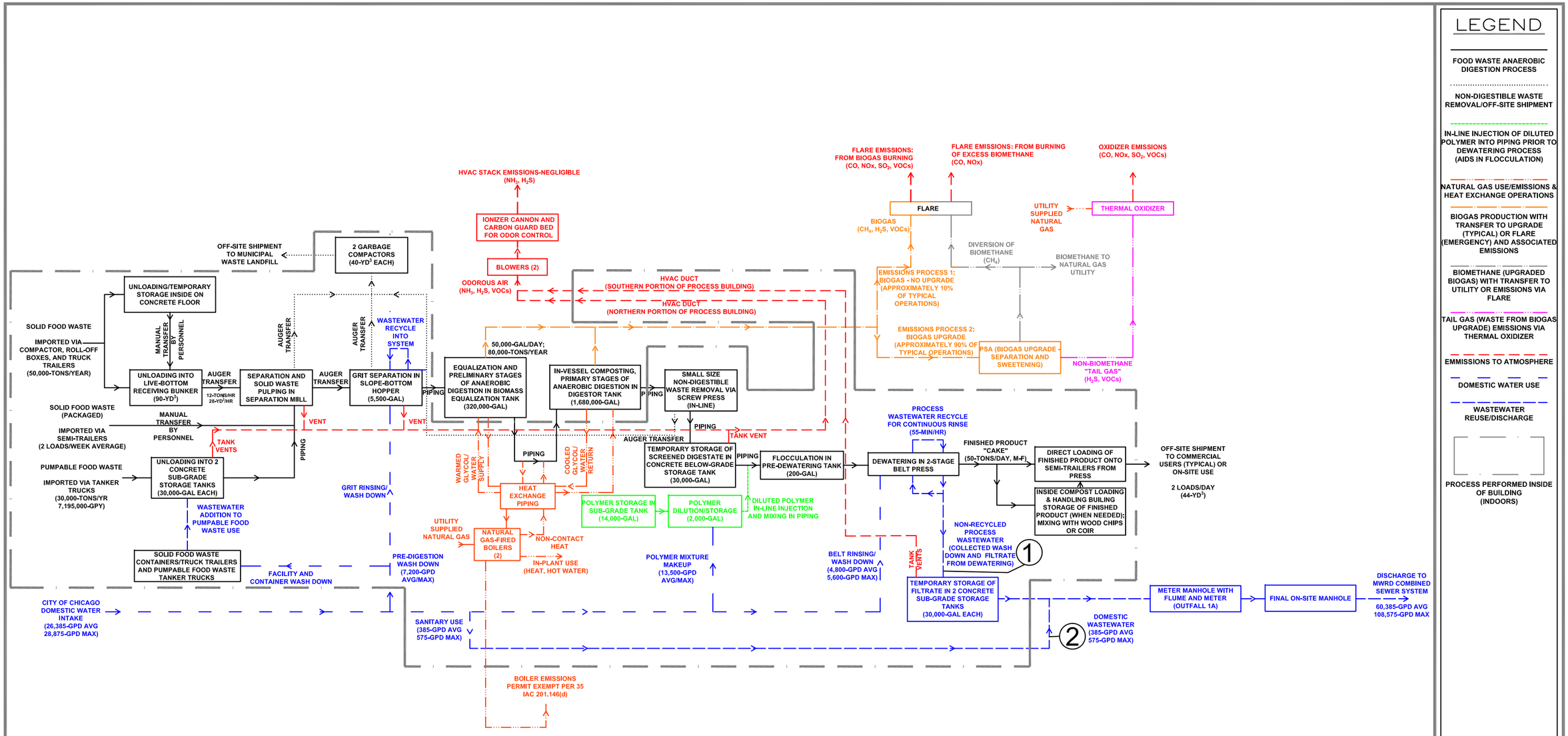

LEGEND

- FOOD WASTE ANAEROBIC DIGESTION PROCESS
- NON-DIGESTIBLE WASTE REMOVAL/OFF-SITE SHIPMENT
- IN-LINE INJECTION OF DILUTED POLYMER INTO PIPING PRIOR TO DEWATERING PROCESS (AIDS IN FLOCCULATION)
- NATURAL GAS USE/EMISSIONS & HEAT EXCHANGE OPERATIONS
- BIOGAS PRODUCTION WITH TRANSFER TO UPGRADE (TYPICAL) OR FLARE (EMERGENCY) AND ASSOCIATED EMISSIONS
- BIOMETHANE (UPGRADED BIOGAS) WITH TRANSFER TO UTILITY OR EMISSIONS VIA FLARE
- TAIL GAS (WASTE FROM BIOGAS UPGRADE) EMISSIONS VIA THERMAL OXIDIZER
- EMMISSIONS TO ATMOSPHERE
- DOMESTIC WATER USE
- WASTEWATER REUSE/DISCHARGE
- PROCESS PERFORMED INSIDE OF BUILDING (INDOORS)

CAD FILE: 7741-04B (MWRD)
REVISED: 11/04/21

DAI ENVIRONMENTAL

GREEN ERA RENEWABLE ENERGY AND URBAN FARMING CAMPUS
650 WEST 83RD STREET
CHICAGO, ILLINOIS

FIGURE 4
PROCESS FLOW DIAGRAM AND WATER USAGE/WASTEWATER DISCHARGE SCHEMATIC

ENVIRONMENTAL

Environmental Engineers, Geologists and Scientists

Tel 847.573.8900
Fax 847.573.8953

Polo Park Business Center
27834 N. Irma Lee Circle
Lake Forest, Illinois 60045-5130

November 22, 2021

Mr. Francis Wambi
Metropolitan Water Reclamation District of Greater Chicago
Industrial Waste Division
Monitoring & Research Department
111 East Erie Street
Chicago, IL 60611

Re: Updated/corrected information
Request for Discharge Authorization
Green Era Renewable Energy & Urban Farming Campus
650 West 83rd Street
Chicago, Illinois 60620-1937

Mr. Wambi:

A *Discharge Authorization Request* (DAR) form (RD-118) and supporting documentation were submitted to the Metropolitan Water Reclamation District of Greater Chicago (MWRD) under cover letter dated November 4, 2021, for the Green Era Renewable Energy and Urban Farming Campus facility ng developed at the property addressed as 650 West 83rd Street in Chicago. Subsequent to the submission, MWRD indicated that updates to the application were required.

This submission provides updated pages to the November 2021 DAR per the multiple conversations between MWRD and DAI Environmental, Inc. Specifically, this submission provides the following:

- RD-118 page 7: Part 9 of the form has been corrected to show the domestic wastewater discharge under the dilutional flows instead of the unregulated process flows
- Attachment A narrative: Updated to clarify that no on-site washing/rinsing of the interiors of transport containers will occur at the facility, all transport containers wash/rinse waters will only be generated off-site, and that the facility will not accept and wash/rinse waters that have been generated by the washing/rinsing of transport containers used to transport chemicals or petroleum. While changes to the narrative were only made in a few paragraphs, the entire, new/revised, Attachment A narrative is provided herein, because the changes resulted in changes in layout/pagination, and so, to avoid any confusion, we judged best to provide a complete, new, version of the Attachment. Additionally, the narrative includes a projected scheduled for completion of construction (April 1, 2022) and startup (May 1, 2022);
- Figure 3: updated to display underground overflow sump near outdoor storage tanks;
- Figure 3A: updated to display underground overflow sump near outdoor storage tanks and on-site sewers around Processing Building; and

- Figure 4: updated to clarify that “pre-digestion wash down” water usage includes “wash down of facility, equipment, and exteriors of food containers/trucks” (previously noted as “facility and container wash down”).

The updated figures include a P.E. stamp, as required. If you have any questions or require additional information, please feel free to contact me at (847) 343-4257.

Sincerely,
DAI Environmental, Inc.

Richard J. Vamos, Ph.D., P.E.
Vice-President

Enclosure

cc: Ms. Erika Allen; Green Era Educational NFP (electronically)
Mr. Jason Feldman; Green Era Educational NFP (electronically)

8. Provide the below information for each connection to the local sanitary sewer system and type of discharge (Batch (B) or Continuous (C) or Both (B+C)).

Sampling Point	Sewer Size	Descriptive Location of the Sampling Point	Flow (GPD) Average	Flow (GPD) Maximum	Type of Discharge (B,C,B+C)
1A	8	In-line auto sampler (flow-based), after final sub-grade holding tanks (upstream of final on-site manhole)	60,385	108,575	B+C
		Total:	60,385	108,575	

9. Process flow discharge: List average daily wastewater discharge, maximum daily discharge, type of discharge (Batch (B) or Continuous (C) or both (B+C)), and sampling point for each process flow. Include the reference number for each flow consistent with the process flow diagram requested in Section E, Item 2 of this application. New facilities may provide estimates for each discharge. Regulated process flows apply to categorical users only.

Ref. No.	Regulated Process Flows	Flow (GPD) Average	Flow (GPD) Maximum	Type of Discharge (B,C,B+C)	Sampling Point

Ref. No.	Unregulated Process Flows	Flow (GPD) Average	Flow (GPD) Maximum	Type of Discharge (B,C,B+C)	Sampling Point
1	Non-recycled process wastewater (collected wash down and filtrate from dewatering)	60,000	108,000	B	1A

Ref. No.	Dilutional Flows	Flow (GPD) Average	Flow (GPD) Maximum	Type of Discharge (B,C,B+C)	Sampling Point
2	Domestic wastewater	385	575	C	1A

For MWRD Use Only
Date submitted

Section B.4 Facility and Process General Description

Facility Location

An 8.905± acre property addressed as 650 West 83rd Street in Chicago and owned by Green Era Educational NFP is being developed into a food waste (solid and liquid) recycling (composting) facility (Green Era Renewable Energy and Urban Farming Campus). The facility and associated equipment will be owned and operated by Green Era 83rd Street, LLC. Figure 1 is a topographical Site Location Map (see Attachment B). Construction is projected to be completed on April 1, 2022, and startup of operations is projected to be on May 1, 2022.

The facility is being built in the Auburn Park neighborhood of Chicago within an industrial area bound by residential neighborhoods. The facility is bound by Aabbitt Adhesives, then a ComEd substation to the north; by South Wallace Street, then Diamond Waste Recycling or a vacant lot used for truck parking to the east: by West 83rd Street, then a church or Mahalia Jackson Park to the south; and by Metra railroad tracks, then a residential neighborhood to the west. Figure 2 (see Attachment B) is an aerial view of the development property and surrounding area.

Facility General Description

Development of the property will include the construction of two (2) buildings, two (2) aboveground storage tanks (ASTs), and the erection of approximately four (4) "hoop houses" (i.e., simple greenhouse structures) that will be used to perform indoor urban farming within the "Urban Agriculture Area." Figures 3-3A provide a site plan and site detail, respectively, with pertinent information (e.g., buildings, utilities, process equipment, etc.).

The facility will be a food waste recycling facility developed to create commercial compost and biomethane for injection into the local natural gas utility system. The facility will process food waste from the greater Chicago metro-area and surrounding Cook County. The majority of waste processed at the facility is expected to be generated within a 30-mile radius of the facility, but may be taken from an approximate 75-mile radius (which would include other "collar" counties such as Lake, DuPage, and Will Counties).

Two (2) forms of food-based waste are to be received: solid food waste and pumpable liquid commercial food waste. Compostable landscape waste will not be accepted by this facility for digestion. The solid food waste that will be accepted by the facility includes food waste from food processors (dairies, bakeries, potato chip plants, etc.), grocery stores, and restaurants in the Chicago metro-area. The facility will also be equipped to accept bagged kitchen waste from neighborhood curbside collection programs, as well as packaged food waste. Packaged food waste is any organic food waste that is contained within consumer packaging (e.g., beverages or soup in cans, milk or juices in plastic jugs, bottles, or cartons, and single serving condiment packs). Packaged food waste will be separated at the facility, while most accepted food will be source-separated (i.e., any food waste that has been pre-sorted from other waste by the customer or waste generator).

Pumpable commercial food waste includes whey, liquid ice cream mix, end of batch soups, and sauces and syrups. Fats, oils, and grease (FOG) collected from grease traps at restaurants and food processors will also be accepted. The facility will receive pumpable food waste in closed tankers.

Included in what is proposed to be accepted by the facility are wash/rinse waters generated off-site from the rinsing (with water) of tanker trucks or railcar tankers used to transport food products. No washing/rinsing of the interiors of transport containers will occur at the Green Era facility. It is our opinion that such wash/rinse waters, composed of rinse water and food products, is food waste. The facility will not accept wash waters that have been generated by the clean-out or rinsing of tanker trucks or railcar (or any other transport containers) used to transport chemicals or petroleum (for which categorical pretreatment standards under 40 CFR 442 would apply).

The facility has been designed to receive and treat 80,000-tons per year of food waste, 50,000-tons/year of solid food waste and 30,000-tons/year (7,195,000-gallons/year) of pumpable food waste. Typically, the facility will receive eight (8) to 16-loads/day of solid food waste via compactors, roll-off boxes, and dump or walking floor trailers (averaging 12-tons/load) and five (5) to 8-loads/day of pumpable food wastes via tanker trucks (averaging 13-tons/truck). Palletized, packaged, food products will also be accepted, typically two (2) loads per week. Typical operations (i.e., when food waste is imported and preliminarily processed) will be from 7:00-17:00, Monday-Saturday. It is possible the facility may periodically operate on Sundays.

The method of composting at this facility will be via a conventional wet anaerobic digestion system, with most operations conducted inside an approximately 35,000-ft^2 Processing Building or inside the two (2) large ASTs located to the north of the Processing Building. Urban farming using some of the finished product generated during anaerobic digestion will be performed within the "Urban Agriculture Area" inside hoop houses (i.e., simple greenhouse structures). The facility will be continuously monitored, with anaerobic digestion operations occurring in the digester tank constantly (24-hrs/day, 7-days/wk).

The below discussion provides a detailed narrative description of the anaerobic digestion process, which includes water use/wastewater generation and discharge. The biogas handling process that generates biomethane for injection into the natural gas utility is also discussed for completeness of understanding of facility operations, but no water use/wastewater discharge is associated with the biogas handling. The only other wastewater associated with the facility is from water domestic use/discharge. Figure 4 depicts the combined facility process flow diagram, including water use/wastewater discharge.

Anaerobic Digestion Process Description (Water Use/Wastewater Generation and Discharge)

Composting will be performed via a conventional wet anaerobic digestion system, with most operations conducted inside the approximately 35,000-ft^2 Processing Building or inside of the two (2) large ASTs located to the north of the Processing Building. The large 1,680,000-gallon anaerobic digester (AST, 75.66-ft diameter by 53-ft tall with 9-ft domed roof) located to the north of the Processing Building, is where the actual "in-vessel" composting will occur. The adjacent 320,000-gallon tank (AST, 33.63-ft diameter by 53-ft tall with 9-ft domed roof) will serve as an equalization and feedstock "conditioning" tank in advance of being pumped to the digester tank.

Two (2) forms of food-based waste will be received by the facility: non-pumpable solid food waste and pumpable liquid commercial food waste. The facility will receive solid food waste via

compactors, roll-off boxes, and dump or walking floor trailers. Packaged food products will also be accepted, with typical receipt of two (2) palletized loads per week. Tanker trucks will deliver pumpable food wastes. All food waste will be normally processed the same day it is received.

Solid food waste received by the facility will be unloaded/tipped into one (1) live-bottom receiving bunker. Trucks delivering solid food waste will back into the receiving bay through the roll-up overhead door, reversing to the end of the main floor inside of the Processing Building. Solid food waste is subsequently tipped from the main floor into the live-bottom receiving bunker located in the basement of the Processing Building. A simple garden hose will be available for post-tipping exterior wash down (no internal container or truck wash down), with collected water captured by trench floor drains that connect to sump pits (collected water subsequently transferred to sub-grade holding tanks). The live-bottom receiving bunker is designed to process approximately 90-yds^3 (between 2 and 3 truckloads). Tipping space will be provided on the main floor of the Processing Building to hold additional loads during busy periods if the bunker is full (i.e., greater than the 90-yd^3 capacity). Tipping on the floor will be accomplished by trucks reversing through the two (2) roll-up overhead doors top the adjacent south of the receiving bay. Packaged food products will be manually added into the bunker by facility personnel.

Pumpable food wastes will be unloaded into two (2) 30,000-gallon holding tanks (T-050A and T-050B) located in the basement of the Processing Building. Tanker trucks will pull onto the main floor inside the north end of the Processing Building for subsequent gravity discharge into the two (2) 30,000-gallon holding tanks. Water collected by the in-building floor drains during post-unloading wash down of the exterior of trucks/containers will be transferred into the holding tanks.

From the live-bottom receiving bunker, solids will be transferred at an average of 28-yds^3/hr (12-tons/hr) via a multi-step inclined, enclosed shaftless screw auger conveyor into one (1) Wackerbauer TM 75 separation mill located on the main floor of the Processing Building. The separation mill is expected to be able to process the daily solid food waste intake within a 2-shift (16-hrs) work period. The separation mill will be used to pulp the organic waste fraction and remove non-digestible materials (e.g., glass or packaging). The separation mill is a specialized type of hammer mill. The hammers rotate inside of a chamber, separating packaging and pounding the solid food waste (i.e., pulping). Material rejected from the separation mill is conveyed away by a multi-step belt conveyor system to the two (2) 40-yd^3 compactors located inside the Processing Building on the main floor for subsequent off-site disposal at a licensed municipal waste landfill. Liquids from the two (2) 30,000-gallon storage tanks will be transferred into the separation mill via progressive cavity pumps and combined with the pulped solid waste to form a homogenized slurry (approximately 14% solids).

The homogenized slurry created in the separation mill will be transferred via auger conveyor into one (1) slope-bottom grit hopper (S-065) with 5,500-gallon holding tank (T-065A) located in the basement of the Processing Building. The grit hopper is used to allow for the settling of dense grit such as stone, sand, glass, organic calcium (shells and bones), and larger diameter packaging. Settled solids will be removed from the grit hopper by inclined auger conveyor that will deposit the materials into a holding bin for subsequent transfer into the two (2) 40-yd^3 compactors located inside the Processing Building on the main floor. Any liquids will drain from the inclined screw conveyor back into the grit hopper.

The homogenized slurry with settled solids removed (referred to as feedstock) will be pumped (approximately 80,000-tons/year, 55,000-gallons/day) from the grit hopper through piping into the one (1) 320,000-gallon Biomass Equalization Tank (T-100) located to the north of the Processing Building. The Biomass Equalization Tank is used to "condition" (hydraulic buffering and batch equalization) the feedstock. Hydrolysis and acidification (initial steps of the anaerobic digestion process) will begin in the Biomass Equalization Tank, breaking down the complex carbon chains of the food waste into simple volatile fatty acids (e.g., acetic acid, butyric acid, and propionic acid). A center-mounted agitator mounted to the top of the tank will limit stratification.

The "conditioned feedstock" is then transferred via pump and piping from the Biomass Equalization Tank to the one (1) 1,680,000-gallon Digester Tank (T-105) located to the north of the Processing Building and adjacent to the Biomass Equalization Tank. The pumps utilized for transfer are located inside the basement of the Processing Building (i.e., feedstock does not flow directly from the Equalization Tank to the Digester Tank, but runs into and back out of the Processing Building). Transfers occur in set intervals, usually once per hour. The volume of material transferred will be determined by the operator to optimize throughput and biogas production. The anaerobic digestion process is carried out in the Digester Tank. Other than the slow, continuous mixing, all operations within the digester tank are carried out by the anaerobic bacteria. To maintain the optimum temperature in the Biomass Equalization Tank and the digester AST, two (2) natural gas-fired boilers operated on-site will warm a glycol/water solution utilized for non-contact heat transfer via double pipe heat exchanger. Heating will also be performed (when needed) when transferring conditioned feedstock from the Biomass Equalization Tank to the Digester Tank.

The liquid product of anaerobic digestion (referred to as digestate) will be pumped from the Digester Tank to one (1) 30,000-gallon holding tank (T-205) located in the basement of the Processing Building (adjacent to tanks T-050A and T-050B). Holding tank T-205 is used for the temporary storage of digestate before the dewatering step. Prior to discharge into T-205, the digestate will pass through a Huber 290 Strainpress® (S-205), a specialized in-line screw press that removes non-digestible materials not previously captured by the separation mill or grit hopper (e.g., pieces of paper or plastic packaging). The screened digestate will drop from the screw press located on the 2nd floor mezzanine in the Processing Building into tank T-205 via piping; non-digestible materials screened from the digestate will drop into the belt conveyor that runs to the two (2) 40-yd^3 compactors located inside the Processing Building on the main floor.

Digestate will be pumped from the 30,000-gallon holding tank for dewatering in one (1) 2-stage belt (Y-211) press located on the main floor of the Processing Building. During transfer of the digestate to the belt press, polymer will be injected into the feed pipe (i.e., in-line addition) to promote formation of flocculation. Undiluted polymer is stored in a 14,000-gallon sub-grade concrete tank (T-210A) located in the basement of the Processing Building; the polymer is diluted in a 2,000-gallon AST (T-210B) located above T-210A on the main floor of the Processing Building. After in-line mixing, digestate is distributed into a 200-gallon tank (T-211) to allow for approximately 2-minutes of flocculation before continuing onto the first stage of the belt press (the gravity belt). The gravity belt allows free water to gravity drain, thickening the digestate. The thickened digestate then moves into the pressure section, where two (2) filter belts progressively

squeeze the thickened digestate to further remove free water. The dewatering process creates a "cake" that is approximately 20 to 25% total solids at a rate of 4-tons per hour. This cake is considered finished product that will typically be directly loaded via multi-step auger conveyor system into trucks for off-site shipment and use by other regional composters or agricultural entities. Some of the finished product will be used on-site by the Urban Growers Collective within the urban farming operations inside the hoop houses or approximately two (2) semi-loads (approximately 44-yd^3) per day of finished product will be transported off-site or used in urban farming operations on-site. If excess finished product is generated that cannot be immediately utilized on-site or shipped off-site, the material will be temporarily stockpiled on the concrete floor inside the approximately 5,600-ft^2 Compost Loading and Handling Building (Pole Barn). Trucks will enter Pole Barn for indoor loading and exit the opposite side (i.e., drive through operation). The Pole Barn will also be used for the stockpiling of wood chips and coir (coconut husks) obtained from the City of Chicago or commercial landscaping companies for mixing with finished product. All mixing and loading will take place inside the Pole Barn building.

All water removed by the 2-stage belt press (referred to as filtrate) will be captured by the trench floor drain and sump located in the dewatering area on the main floor of the Processing Building. Recovered water will be transferred via pump from the sump pit into two (2) 30,000-gallon tanks (T-250A and T-250B) located in the basement of the Processing Building. The filtrate will be discharged as process wastewater into the municipal combined sewer system via on-site manhole (Outfall 1A) under an approved Discharge Authorization from the Metropolitan Water Reclamation District of Greater Chicago (MWRD). No "pretreatment" of this wastewater (i.e., the filtrate) is expected to be conducted, or necessary.

Processing Building Air Odor Control (Associate Process to Anaerobic Digestion)
(No Water Use/Wastewater Generation and Discharge)

To address potential odors and any regulated contaminants in the air space within the Processing Building, the building will be maintained at a slight negative pressure and the emissions from the building will be routed via the HVAC system through two (2) control devices: an ionization reactor (a.k.a., ionizer cannon) and an activated carbon guard bed. Two (2) streams of air will be drawn from the Processing Building, one (1) from the southern portion/dewatering area and one (1) from the northern portion/feedstock receiving area. All of this building air will pass through banks of ionization reactor units installed within the building air duct system. In addition to the HVAC system, air vented from the sub-grade holding tanks, the separation mill, and the slope-bottom grit hopper will also be treated by the odor control devices. The air is drawn from the building and sub-grade tanks by two (2) air handlers (i.e., exhaust fans) located outside the west wall of the Processing Building. From the air handlers, air will pass through two (2) 40-ft modified shipping containers, the first with the ionizer cannon installed and the second loaded with 16 activated carbon cells ("carbon guard bed"), before exiting the odor treatment system via vertical stack. There will be no water use or wastewater generation and discharge as a result of this air pollution control process.

Biogas Handling Process Description (Associate Process to Anaerobic Digestion)
(No Water Use/Wastewater Generation and Discharge)

Biogas (consisting primarily of methane) will be produced by the bacteria during the anaerobic digestion process at an estimated generation rate of 400-scfm (AVG) 500-scfm (MAX). The gas will collect within the headspace (top) of the Digester Tank, removed by piping connecting the roof of the tank to the biogas handling equipment. Additionally, any gases produced in the Biomass Equalization Tank, primarily Carbon dioxide and trace levels of Hydrogen sulfide, will be blended with the biogas generated in the digester (by piping running from the Biomass Equalization Tank roof to the Digester Tank roof).

Biogas is typically transferred to the pressure swing adsorption (PSA) system, which is the upgrading equipment that converts biogas to biomethane. The upgrading system consists of several equipment skids situated to the north of the Processing Building and east of the Digester Tank. The first equipment skid of the biogas upgrade process includes a compressor, resulting in a pressure of 150-psig and sour water condensation. The second skid consists of the PSA biogas upgrading system that will be used to produce pipeline quality biomethane from the digester biogas. Simply put, the PSA system "cleans up" the biogas by removing Carbon dioxide, Hydrogen sulfide, and other trace gases, producing a concentrated biomethane (the product) and "tail gas" (i.e., the non-methane gases). The PSA system has a maximum biogas input capacity of 400-scfm, producing biomethane at a rate of 226-scfm and tail gas at a rate of 155-scfm.

The biomethane produced in the PSA then passes through another compressor unit and a regulator before being injected back into the natural gas distribution piping. Any excess biomethane that cannot be transferred into the distribution piping (assumed to occur only 120 to 240-hrs/year) will be burned via the on-site flare (F-370), located within the same general location as the biogas upgrading equipment. (The scenario whereby biomethane is burned in the flare will rarely occur, as biomethane will not be produced if the public utility cannot or will not accept the biomethane, and biogas will be routed directly to the flare instead.) The tail gas discharge from the PSA system will be sent to the thermal oxidizer (F-330), situated adjacent to the flare.

When necessary due to system upsets, maintenance, or when the rate of biogas generation exceeds the design maximum capacity of the PSA system, biogas that cannot be transferred to the biogas upgrading process will be routed directly to the flare. The flare is designed to burn up to a maximum flow rate of over 800-scfm of biogas, though the digester is only capable of generating a maximum flow rate the 500-scfm. As such, the flare is designed to handle the maximum flow rate of biogas the digester can generate (i.e., a 100% by-pass of the upgrading equipment as necessary). There will be no water use or wastewater generation and discharge as a result of this air pollution control process.

Sections C.5-C.9 Water Intake/Discharge/Treatment

Domestic water will be obtained from the City of Chicago (account numbers 1347789-699385 and 1347789-699386) via tap into the water main located below West 83rd Street. A single 8-in service line runs underground from the water main to the aboveground valve box located near the southwest corner of the facility. The underground piping transitions from below to aboveground inside the valve box, splitting into two (2) lines, a 6-in metered domestic service feed and an 8-in fire water feed. The domestic service feed is equipped with a 3-in diameter meter (Badger Meter, serial 190096455). The 8-in fire water feed includes a metering by-pass line equipped with a 5/8-in meter (Badger Meter, serial 190150616). Both feeds transition back underground after the meters and inside the valve box, run along the western edge of the 35,000-ft^2 processing building, entering through the approximate center of the west wall.

Municipal water intake will be utilized for domestic use (i.e., sinks, toilets, etc.), polymer makeup (for improved solids removal during post-digestion dewatering), and equipment/facility wash water. Four (4) operations conducted by the facility will account for the equipment/facility wash water generation:

- Wash down of the exterior of food waste containers, trucks, and tankers following unloading (pre-digestion);
- Rinsing of separated grit prior to transfer to garbage compactors (pre-digestion);
- Dewatering belt press clean rinsing (post-digestion); and
- General housekeeping.

The estimated water use volumes are as follows:

- Domestic use – 385-gallons/day average; 575-gallons/day maximum
- Polymer makeup – 13,500-gallons/day average/maximum
- Wash water – 12,000-gallons/day average; 12,800-gallons/day maximum
    - Pre-digestion and housekeeping – 7,200-gallons/day average/maximum
    - Post-digestion – 4,800-gallons/day average; 5,600-gallons/day maximum

All City of Chicago water intake will discharge to the MWRD. The combined total average discharge volume to the MWRD is 60,385-gallons/day, consisting of the 385-gallons domestic wastewater and 60,000-gallons of combined process wastewater. Maximum discharge volume is estimated as 108,575-gallons/day, 575-gallons domestic wastewater and 108,000-gallons of combined process wastewater.

The estimated daily discharge to the MWRD will exceed the volume of water intake. The excess volume comes from the imported liquid food waste, with the wastewater ultimately generated by the belt press dewatering step (i.e., filtrate). The filtrate and all wash down water will be collected in the two (2) 30,000-gallon holding tanks (T-250A and T-250B). This combined process wastewater will be batch released. Average discharge will be 60,000-gallon batches (i.e., the combined volume of the below-grade holding tanks); maximum process wastewater discharge would be 108,000-gallons (maximum potential volume generated by 24-hrs operation of the belt

press at maximum capability). Batch discharge may be performed at any time and on any day. Batch discharge will occur as needed, expected daily. No regulatory pretreatment of this wastewater (i.e., the filtrate) is required, and no form of treatment is expected to be conducted or necessary to maintain compliance with Appendix B discharge limitations. The two (2) 30,000-gallon holding tanks release into a 4-in diameter force main that exits the Processing Building at the western portion of the southern wall.

Additional discharge from the facility will result from continuous discharge of domestic wastewater at an estimated 385-gallons average, 575-gallons maximum. This minimal additional volume will not be collected in the 30,000-gallon holding tanks, but will be directly discharged into the gravity sanitary sewer that exits the Processing Building at the approximate center of the southern building wall and then flows to a manhole (where the 4-inch diameter process wastewater force main also discharges into to create the combined discharge flow).

The facility combined wastewater then flows through on-site sewers before discharging into the existing combined sewer system located below West 83rd Street to the south of the facility. In lieu of sampling at the final on-site manhole (located east of the West 83rd Street entrance drive near the south-center property boundary), the facility is proposing to utilize the metering manhole on the west side of the West 83rd Street entrance drive (39.33-ft upstream) as designated sampling point (i.e., metering manhole is Outfall 1A instead of the final on-site manhole). Collection of discharge samples at the metering manhole will still include the facility combined wastewater (no blind ties or other connections exist subsequent to the metering manhole), therefore the metering manhole will be representative of combined facility discharge. Additionally, the final on-site manhole is not adequately sized to install a proper flow metering device. There are no blind connections to the final manhole. In other words, the flow in final manhole will always be exactly the same flow in terms of volume and characteristics as the flow through the final manhole.

In order to accurately monitor the wastewater discharge rage, an 8-in Palmer-Bowlus flume will be installed within the metering manhole (Outfall 1A). The discharge volume will be monitored by the flow meter (manufacturer/model to be determined but likely manufactured by Teledyne ISCO), mounted inside of the metering manhole. As a flow-based meter used to directly tally discharge, the meter and flume will be calibrated monthly and an annual calibration/certification will be completed by a factory-authorized representative, as required.

Discharge samples will be collected from the metering manhole during collection of semi-annual compliance and User Charge (annual at a minimum) sampling. Please note, the facility will additionally install a separate in-line flow meter and auto sampler inside the Processing Building at a point before the processing wastewater mixes with any sanitary wastewater. This auto sampler will be used for process monitoring and control purposes, not MWRD sampling requirements.

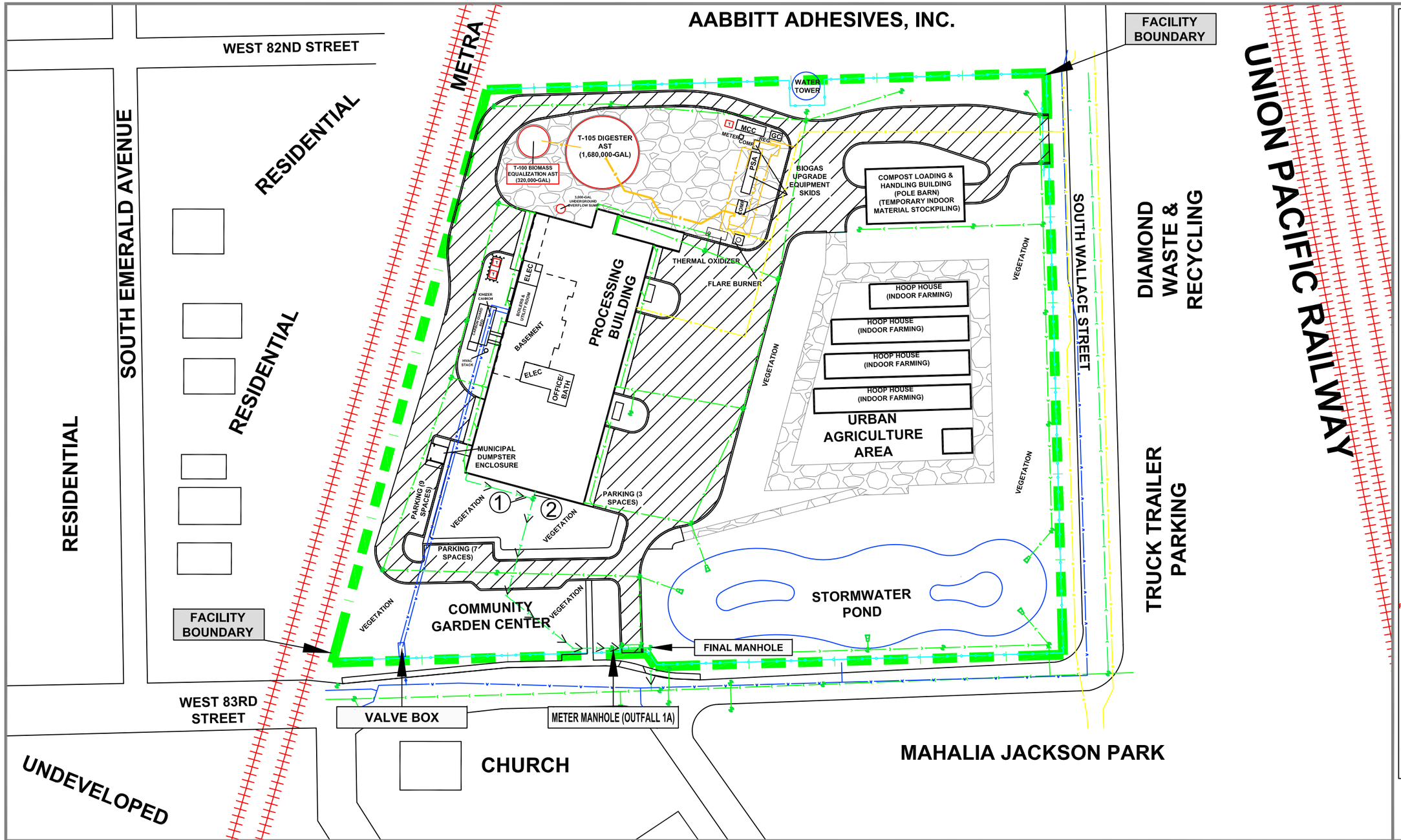

DAI ENVIRONMENTAL

GREEN ERA RENEWABLE ENERGY AND URBAN FARMING CAMPUS
650 WEST 83RD STREET
CHICAGO, ILLINOIS

FIGURE 3
SITE PLAN

METRA

ASPHALT DRIVEWAY

T-105 DIGESTER AST (1,680,000-GAL)

T-100 BIOMASS EQUALIZATION AST (320,000-GAL)

5,000-GAL UNDERGROUND OVERFLOW SUMP

T MCC METER COMP. REG. GC

PSA

COMP.

BIOGAS UPGRADE EQUIPMENT SKIDS

ASPHALT DRIVEWAY

COMPOST LOADING & HANDLING BUILDING (POLE BARN) (TEMPORARY INDOOR MATERIAL STOCKPILING)

NON-DIGESTIBLE WASTE TRASH COMPACTORS (40-YD^3), MAIN FLOOR

TANKER TRUCK RECEIVING/UNLOADING (LIQUID FOOD WASTE)

TRUCK RAMP (PACKAGED FOOD RECEIVING)

TANK T-205, SCREENED DIGESTATE (30,000-GAL)

LIQUID FOOD/WASH WATER TANKS (30,000-GAL EACH)

TANK T-050A

TANK T-050

S-205 SCREEN PRESS (IN-LINE SOLIDS REMOVALS)

THERMAL OXIDIZER (EMISSIONS)

FLARE BURNER (EMISSIONS)

BOILERS

IONIZER CANNON

H-062 LIVE-BOTTOM RECEIVING BUNKER, SUB-GRADE (90-YD^3)

PUMP

PUMP

RECEIVING BAY/ UNLOADING TO BUNKER (SOLID FOOD WASTE)

CARBON GUARD BED

DUST SUPPRESSION SCRUBBER WATER CONDENSATION

S-063 SEPARATION MILL

T-065 GRIT SEPARATION TANK (5,500-GAL)

INDOOR SOLID FOOD WASTE STOCKPILING AREA (MAIN FLOOR)

T-210B POLYMER TANK (200-GAL)

FUTURE RECEIVING BAY

HVAC STACK

T-210A POLYMER TANK T-210C SPARE (14,000-GAL EACH)

T-210C

T-210A

T-251 SPARE TANK (30,000-GAL)

T-250B

T-250A

FILTRATE TANKS (30,000-GAL EACH)

T-211 FLOC TANK (200-GAL) & Y-211 BELT PRESS

SEMI-TRUCK LOADING (FINISHED PRODUCT)

PROCESSING BUILDING

ASPHALT DRIVEWAY

VEGETATION

HOOP HOUSE (INDOOR FARMING)

HOOP HOUSE (INDOOR FARMING)

HOOP HOUSE (INDOOR FARMING)

URBAN AGRICULTURE AREA

VEGETATION

PARKING (9 SPACES)

MUNICIPAL DUMPSTER ENCLOSURE

VEGETATION

PARKING (3 SPACES)

LEGEND

- PROPERTY BOUNDARY OF COMPOSTING FACILITY (8.095-ACRES)
- RAILROAD TRACKS
- BIOGAS/BIOMETHANE/TAIL GAS PIPING
- WATER UTILITY
- STORM SEWER
- SANITARY SEWER
- PROCESS PIPING (FOOD WASTE SLURRY, DIGESTATE, FILTRATE)
- TRENCH DRAIN AND SUMP PIT
- T ELECTRICAL TRANSFORMER
- FENCING (6-FT HIGH)
- GRAVEL COVERING
- BASEMENT LEVEL OF BUILDING
- CONVEYOR UNIT
- SUB-GRADE STORAGE TANK (BASEMENT LEVEL OF BUILDING)
- TRUCK ROUTING

N

0’ 50’

S C A L E

CAD FILE: 7741-13 (MWRD)

REVISED: 11/17/21

DAI ENVIRONMENTAL

GREEN ERA RENEWABLE ENERGY AND URBAN FARMING CAMPUS
650 WEST 83RD STREET
CHICAGO, ILLINOIS

FIGURE 3A
SITE DETAIL SHOWING
PROCESS OPERATIONS AND EQUIPMENT

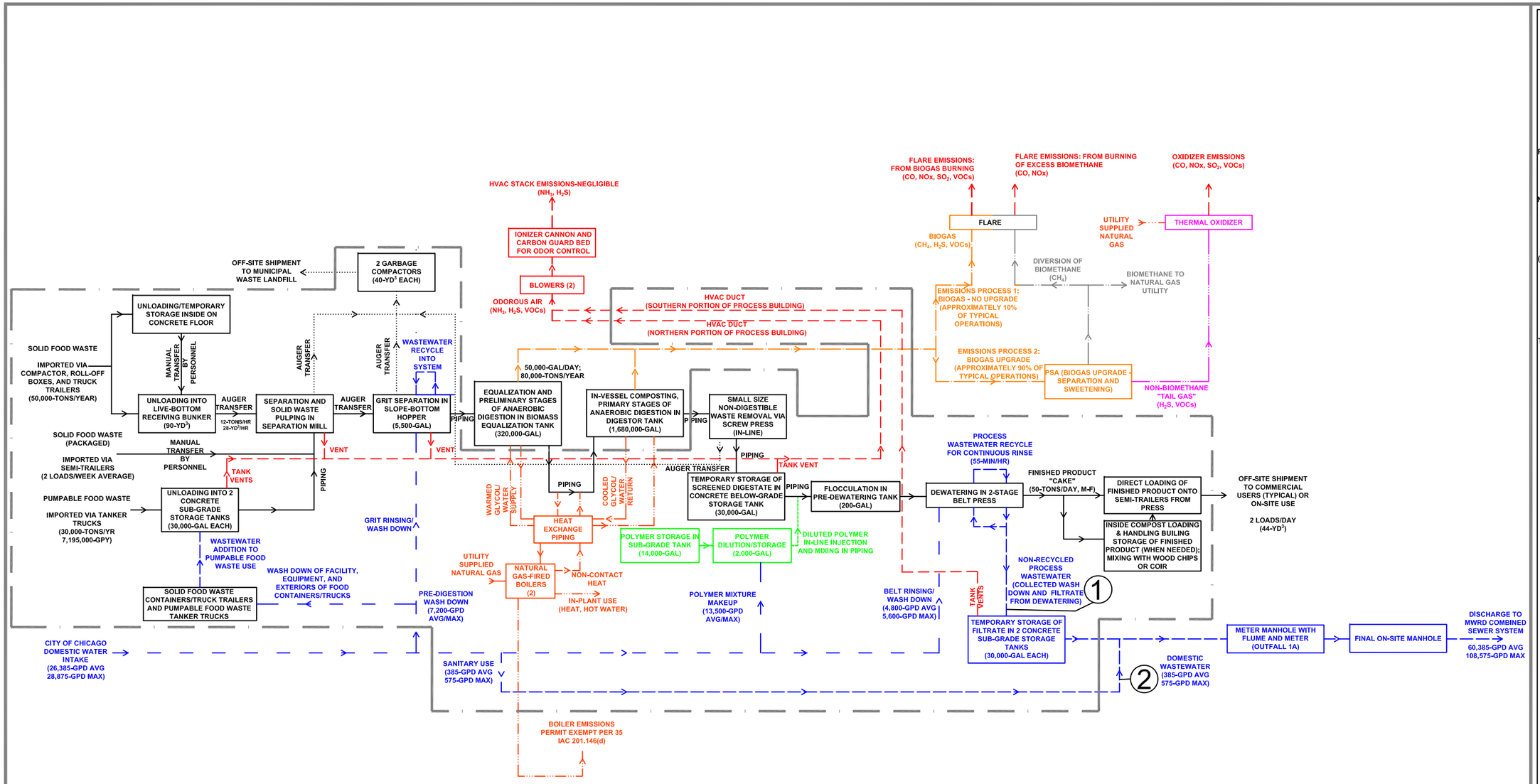

LEGEND

- FOOD WASTE ANAEROBIC DIGESTION PROCESS
- NON-DIGESTIBLE WASTE REMOVAL/OFF-SITE SHIPMENT
- IN-LINE INJECTION OF DILUTED POLYMER INTO PIPING PRIOR TO DEWATERING PROCESS (AIDS IN FLOCCULATION)
- NATURAL GAS USE/EMISSIONS & HEAT EXCHANGE OPERATIONS
- BIOGAS PRODUCTION WITH TRANSFER TO UPGRADE (TYPICAL) OR FLARE (EMERGENCY) AND ASSOCIATED EMISSIONS
- BIOMETHANE (UPGRADED BIOGAS) WITH TRANSFER TO UTILITY OR EMISSIONS VIA FLARE
- TAIL GAS (WASTE FROM BIOGAS UPGRADE) EMISSIONS VIA THERMAL OXIDIZER
- EMMISSIONS TO ATMOSPHERE
- DOMESTIC WATER USE
- WASTEWATER REUSE/DISCHARGE
- PROCESS PERFORMED INSIDE OF BUILDING (INDOORS)

CAD FILE: 7741-04B (MWRD)
REVISED: 11/17/21

DAI ENVIRONMENTAL

GREEN ERA RENEWABLE ENERGY AND URBAN FARMING CAMPUS
650 WEST 83RD STREET
CHICAGO, ILLINOIS

FIGURE 4
PROCESS FLOW DIAGRAM AND WATER USAGE/WASTEWATER DISCHARGE SCHEMATIC

ENVIRONMENTAL

Environmental Engineers, Geologists and Scientists

Tel 847.573.8900
Fax 847.573.8953

Polo Park Business Center
27834 N. Irma Lee Circle
Lake Forest, Illinois 60045-5130

January 27, 2022

Mr. Francis Wambi
Metropolitan Water Reclamation District of Greater Chicago
Industrial Waste Division
Monitoring & Research Department
111 East Erie Street
Chicago, IL 60611

Re: Information clarification
Request for Discharge Authorization
Green Era Renewable Energy & Urban Farming Campus
650 West 83rd Street
Chicago, Illinois 60620-1937

Mr. Wambi:

This submission is provided in order to provide clarification of information associated with the *Discharge Authorization Request* (DAR) submitted for the Green Era Renewable Energy and Urban Farming Campus facility addressed as 650 West 83rd Street in Chicago. In response to your questions regarding facility discharge volumes and sewer flow directions, please see the below discussion and the enclosed updated figures (3 and 3A).

Per our recent discussions, we want to confirm to you that the discharge of process water from the two (2) 30,000-gallon sub-grade concrete tanks is to be viewed as a continuous discharge, not a batch discharge. Therefore, pages 6 and 7 of the RD-118 Form have been updated to indicate unregulated process flows as "C" for continuous instead of "B" for batch, and to provide the required information concerning continuous discharges. Additionally, the narrative of the original DAR (Attachment A) has been revised, and the revised version is enclosed, to provide corrections and more detailed explanations regarding the anticipated time, durations, and rates of discharge than can be easily provided on page 6 of the RD-118 Form, as follows:

- On a weekly basis, it is estimated that 420,000-gallons of process wastewater will be generated and discharged. If the facility is operating on a 7-day basis, that corresponds to a daily discharge volume of 60,000-gallons/day. If the facility is operating 5-days/week, that corresponds to a daily discharge volume of 84,000-gallons/day.
- When discharging, the typical discharge flowrate will be on the order of 80-100-gallons/minute (gpm), though the discharge pump is rated up to a maximum of 220-gpm.
- A daily discharge volume of 60,000-gallons/day at a flow rate of 80-gpm corresponds to 12.5-hours of discharge (of process wastewater, with the domestic wastewater quantities practically insignificant). As such, under typical operations, the facility may be discharging

from 7:00 – 19:30 (7-AM to 7:30 PM). However, it is possible that discharge could occur at any time of day, on any day of the week. As such, the RD-118 lists the possible/maximum hours of discharge as 7-AM to 7-AM (i.e., 24-hrs/day).

- The facility has the capability of throttling down the discharge pump, and utilizing the full 60,000-gallons of holding tank storage capacity, so as to slowly discharge over the course of 24-hrs at discharge flowrates as low as approximately 50-gpm.
- Additional discharge from the facility will result from continuous discharge of domestic wastewater at an estimated 385-gallons average, 575-gallons maximum. This minimal additional volume will not be collected in the 30,000-gallon holding tanks, but will be directly discharged into the gravity sanitary sewer that exits the Processing Building at the approximate center of the southern building wall and then flows to a manhole (where the 4-inch diameter process wastewater force main also discharges into to create the combined discharge flow).

The Narrative (Attachment A) has also been updated to include references to (and the attachments themselves are also being included in this submission), for other Attachments as follows:

Attachment B = Figures (with revised Figures 3 and 3A included in this submission). Figure 3 has been updated to display the flow direction through sanitary and storm sewers and to help clarify sewer types, and Figure 3A has been updated to more clearly depict the process wastewater sewer line and the sanitary sewer line as they exit the building and combine outside the building. The updated figures include a P.E. stamp, as required.

Attachment C = Site Utility Drawing from Project Civil Engineers (shows location and general specifications for the proposed sampling manhole).

Attachment D = Manufacturer's product data sheet for the Badger water intake meters

Attachment E = Specifications for the proposed sampling manhole and flume

Attachment F = Specifications for the proposed flume water level measuring device and metering device.

It is understood that some of these attachments are more relevant to a User Charge Methodology (UCM) Proposal than for a Discharge Authorization Request, but are being included herein for consistency and completeness.

If you have any questions or require additional information, please feel free to contact me at (847) 343-4257.

Sincerely,
DAI Environmental, Inc.

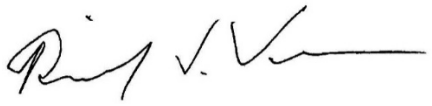

Richard J. Vamos, Ph.D., P.E.
Vice-President

Enclosure

cc: Ms. Erika Allen; Green Era Educational NFP (electronically)
Mr. Jason Feldman; Green Era Educational NFP (electronically)

Enclosures
Revised Pages 6-7 of RD-118 Form
Revised Attachment A (narrative)
Revised Portions of Attachment B (DAI Figures 3, 3A)
Attachment C-Site Utility Plan
Attachment D = Manufacturer's product data sheet for the Badger water intake meters
Attachment E = Specifications for the proposed sampling manhole and flume
Attachment F = Specifications for the proposed flume water level measuring device and metering device.

6. Provide the following information on wastewater flow rate (New facilities may estimate).

	Mon	Tue	Wed	Thu	Fri	Sat	Sun
Hours of Operation (e.g., 9am-5pm)	7AM-7AM	7AM-7AM	7AM-7AM	7AM-7AM	7AM-7AM	7AM-7AM	7AM-7AM
Hours of Discharge Listed is Max, typical is 7AM - 7:30 PM	7AM-7AM	7AM-7AM	7AM-7AM	7AM-7AM	7AM-7AM	7AM-7AM	7AM-7AM
Hours Per Day Discharged 24=Max, typical is 12.5-hrs	24	24	24	24	24	24	24
Peak Hourly Flow Rate (gpm)	220	220	220	220	220	220	220
Average Hourly Flow Rate Per Day (gpm) 60,000-gpd/12.5-hrs	80	80	80	80	80	80	80
Average Number of Employees	7	7	7	7	7	2	2

See Further Explanation in Attachment A of this DAR for more detailed discussion regarding expected discharge flowrate

7. Batch Discharge.

Batch/infrequent discharges are those discharges which are intermittent or noncontinuous and which occur less frequently than once per hour. Do not include discharges from domestic sources (toilets, sinks, showers, etc.), boiler blowdown, noncontact cooling water, or air conditioner towers, or discharges which do not directly enter the sewer system, but are sent to treatment, recycle, etc.

If batch discharges occur or will occur, please complete the table below (New facilities may estimate).

Description of Batch Discharge (e.g., Hydro-Test Water)	Frequency of Batch Discharge (e.g.: daily, weekly, monthly)	Time of Batch Discharge			Average Volume (gallons) per Batch Discharge	Flow Rate (gpm)
		Day of Week	Time of Day	Duration		

For MWRD Use Only
Date submitted

8. Provide the below information for each connection to the local sanitary sewer system and type of discharge (Batch (B) or Continuous (C) or Both (B+C)).

Sampling Point	Sewer Size	Descriptive Location of the Sampling Point	Flow (GPD) Average	Flow (GPD) Maximum	Type of Discharge (B,C,B+C)
1A	8	In-line auto sampler (flow-based), after final sub-grade holding tanks (upstream of final on-site manhole)	60,385	108,575	B+C
		Total:	60,385	108,575	

9. Process flow discharge: List average daily wastewater discharge, maximum daily discharge, type of discharge (Batch (B) or Continuous (C) or both (B+C)), and sampling point for each process flow. Include the reference number for each flow consistent with the process flow diagram requested in Section E, Item 2 of this application. New facilities may provide estimates for each discharge. Regulated process flows apply to categorical users only.

Ref. No.	Regulated Process Flows	Flow (GPD) Average	Flow (GPD) Maximum	Type of Discharge (B,C,B+C)	Sampling Point

Ref. No.	Unregulated Process Flows	Flow (GPD) Average	Flow (GPD) Maximum	Type of Discharge (B,C,B+C)	Sampling Point
1	Non-recycled process wastewater (collected wash down and filtrate from dewatering)	60,000	108,000	B	1A

Ref. No.	Dilutional Flows	Flow (GPD) Average	Flow (GPD) Maximum	Type of Discharge (B,C,B+C)	Sampling Point
2	Domestic wastewater	385	575	C	1A

For MWRD Use Only
Date submitted

Mr. Francis Wambi
MWRDGC
January 27, 2022

ATTACHMENT A
NARRATIVE

Attachment A-Narrative (1/27/2022 Update)

Section B.4 Facility and Process General Description

Facility Location

An 8.905± acre property addressed as 650 West 83rd Street in Chicago and owned by Green Era Educational NFP is being developed into a food waste (solid and liquid) recycling facility (Green Era Renewable Energy and Urban Farming Campus). The facility and associated equipment will be owned and operated by Green Era 83rd Street, LLC. Figure 1 in Attachment B is a topographical Site Location Map. Construction is projected to be completed on April 1, 2022, and startup of operations is projected to be on May 1, 2022.

The facility is being built in the Auburn Park neighborhood of Chicago within an industrial area bound by residential neighborhoods. The facility is bound by Aabbitt Adhesives, then a ComEd substation to the north; by South Wallace Street, then Diamond Waste Recycling or a vacant lot used for truck parking to the east: by West 83rd Street, then a church or Mahalia Jackson Park to the south; and by Metra railroad tracks, then a residential neighborhood to the west. Figure 2 in Attachment B is an aerial view of the development property and surrounding area.

Facility General Description

Development of the property will include the construction of two (2) buildings, two (2) aboveground storage tanks (ASTs), and the erection of approximately four (4) "hoop houses" (i.e., simple greenhouse structures) that will be used to perform indoor urban farming within the "Urban Agriculture Area." Figures 3-3A in Attachment B provide a site plan and site detail, respectively, with pertinent information (e.g., buildings, utilities, process equipment, etc.). Attachment C provides a Site Utility Plan-Sheet C1.0-Prepared by Terra Engineering Ltd. (the project's Civil Engineering Firm, and hence not stamped by DAI). The wastewater discharge lines and manholes depicted in DAI's Figure 3 are taken from this Terra Engineering drawing.

The facility will be a food waste recycling facility developed to create commercial compost and biomethane for injection into the local natural gas utility system. The facility will process food waste from the greater Chicago metro-area and surrounding Cook County. The majority of waste processed at the facility is expected to be generated within a 30-mile radius of the facility, but may be taken from an approximate 75-mile radius (which would include other "collar" counties such as Lake, DuPage, and Will Counties).

Two (2) forms of food-based waste are to be received: solid food waste and pumpable liquid commercial food waste. Compostable landscape waste will not be accepted by this facility for digestion. The solid food waste that will be accepted by the facility includes food waste from food processors (dairies, bakeries, potato chip plants, etc.), grocery stores, and restaurants in the Chicago metro-area. The facility will also be equipped to accept bagged kitchen waste from neighborhood curbside collection programs, as well as packaged food waste. Packaged food waste is any organic food waste that is contained within consumer packaging (e.g., beverages or soup in cans, milk or juices in plastic jugs, bottles, or cartons, and single serving condiment packs). Packaged food waste will be separated at the facility, while most accepted food will be source-

separated (i.e., any food waste that has been pre-sorted from other waste by the customer or waste generator).

Pumpable commercial food waste includes whey, liquid ice cream mix, end of batch soups, and sauces and syrups. Fats, oils, and grease (FOG) collected from grease traps at restaurants and food processors will also be accepted. The facility will receive pumpable food waste in closed tankers. Included in what is proposed to be accepted by the facility are wash/rinse waters generated off-site from the rinsing (with water) of tanker trucks or railcar tankers used to transport food products. No washing/rinsing of the interiors of transport containers will occur at the Green Era facility. It is our opinion that such wash/rinse waters, composed of rinse water and food products, is food waste. The facility will not accept wash waters that have been generated by the clean-out or rinsing of tanker trucks or railcar (or any other transport containers) used to transport chemicals or petroleum (for which categorical pretreatment standards under 40 CFR 442 would apply).

The facility has been designed to receive and treat 80,000-tons per year of food waste, 50,000-tons/year of solid food waste and 30,000-tons/year (7,195,000-gallons/year) of pumpable food waste. Typically, the facility will receive eight (8) to 16-loads/day of solid food waste via compactors, roll-off boxes, and dump or walking floor trailers (averaging 12-tons/load) and five (5) to 8-loads/day of pumpable food wastes via tanker trucks (averaging 13-tons/truck). Palletized, packaged, food products will also be accepted, typically two (2) loads per week. Typical operations (i.e., when food waste is imported and preliminarily processed, and when wastewater will be discharged) will be from 7:00-17:00, Monday-Saturday. However, depending on various factors, the facility could operate 24-hrs/day, 7-days/week (i.e., the facility may periodically operate on Sundays). As such, the RD-118 Form lists the hours per operation and hours of discharge as 24-hrs/day, 7-days/week. Between two (2) and seven (7) personnel are expected to control operations on-site.

The method of composting at this facility will be via a conventional wet anaerobic digestion system, with most operations conducted inside an approximately 35,000-ft^2 Processing Building or inside the two (2) large ASTs located to the north of the Processing Building. The Illinois Environmental Protection Agency (Illinois EPA) views the anaerobic digestion of food waste as "in-vessel composting," and defines "composting" as "the biological treatment process by which microorganisms decompose the organic fraction of waste, producing compost." The Illinois EPA land pollution control permit will be issued for a composting facility. Urban farming using some of the finished product generated during anaerobic digestion will be performed within the "Urban Agriculture Area" inside hoop houses (i.e., simple greenhouse structures). The facility will be continuously monitored, with anaerobic digestion operations occurring in the digester tank constantly (24-hrs/day, 7-days/wk).

The below discussion provides a detailed narrative description of the anaerobic digestion process, which includes water use/wastewater generation and discharge. The biogas handling process that generates biomethane for injection into the natural gas utility is also discussed for completeness of understanding of facility operations, but no water use/wastewater discharge is associated with the biogas handling. The only other wastewater associated with the facility is from water domestic use/discharge. Figure 4 in Attachment B depicts the combined facility process flow diagram, including water use/wastewater discharge.

Anaerobic Digestion Process Description
(Water Use/Wastewater Generation and Discharge)

The wet anaerobic digestion process will be completed inside the large 1,680,000-gallon anaerobic digester (AST, 75.66-ft diameter by 53-ft tall with 9-ft domed roof) located to the north of the Processing Building, where the actual "in-vessel" composting will occur. Supporting the operations are an approximately 35,000-ft^2 Processing Building (waste receiving and preliminary processing, and digestate dewatering) and the 320,000-gallon biomass equalization tank (AST, 33.63-ft diameter by 53-ft tall with 9-ft domed roof) located north of the building and adjacent to the anaerobic digester AST (equalization and feedstock "conditioning" in advance of being pumped to the digester tank).

Two (2) forms of food-based waste will be received by the facility: non-pumpable solid food waste and pumpable liquid commercial food waste. The facility will receive solid food waste via compactors, roll-off boxes, and dump or walking floor trailers. Packaged food products will also be accepted, with typical receipt of two (2) palletized loads per week. Tanker trucks will deliver pumpable food wastes. All food waste will be normally processed the same day it is received.

Solid food waste received by the facility will be unloaded/tipped into one (1) live-bottom receiving bunker. Trucks delivering solid food waste will back into the receiving bay through the roll-up overhead door, reversing to the end of the main floor inside of the Processing Building. Solid food waste is subsequently tipped from the main floor into the live-bottom receiving bunker located in the lower level of the Processing Building. A simple garden hose will be available for post-tipping exterior wash down (no internal container or truck wash down), with collected water captured by trench floor drains that connect to sump pits (collected water subsequently transferred to concrete sub-grade holding tanks). The live-bottom receiving bunker is designed to process approximately 90-yds^3 (between 2 and 3 truckloads). Tipping space will be provided on the main floor of the Processing Building to hold additional loads during busy periods if the bunker is full (i.e., greater than the 90-yd^3 capacity). Tipping on the floor will be accomplished by trucks reversing through the two (2) roll-up overhead doors top the adjacent south of the receiving bay. Packaged food products will be manually added into the bunker by facility personnel.

Pumpable food wastes will be unloaded into two (2) 30,000-gallon concrete sub-grade holding tanks (T-050A and T-050B) located in the lower level of the Processing Building. Tanker trucks will pull onto the main floor inside the north end of the Processing Building for subsequent gravity discharge into the two (2) 30,000-gallon concrete sub-grade holding tanks. Water collected by the in-building floor drains during post-unloading wash down of the exterior of trucks/containers will be transferred into the concrete sub-grade holding tanks.

From the live-bottom receiving bunker, solids will be transferred at an average of 28-yds^3/hr (12-tons/hr) via a multi-step inclined, enclosed shaftless screw auger conveyor into one (1) Wackerbauer TM 75 separation mill located on the main floor of the Processing Building. The separation mill is expected to be able to process the daily solid food waste intake within a 2-shift (16-hrs) work period. The separation mill will be used to pulp the organic waste fraction and remove non-digestible materials (e.g., packaging). The separation mill is a specialized type of hammer mill. The hammers rotate inside of a chamber, separating packaging and pounding the

solid food waste (i.e., pulping). Material rejected from the separation mill is conveyed away by a multi-step belt conveyor system to the two (2) 40-yd^3 compactors located inside the Processing Building on the main floor for subsequent off-site disposal at a licensed municipal waste landfill. Liquids from the two (2) 30,000-gallon storage tanks will be transferred into the separation mill via progressive cavity pumps and combined with the pulped solid waste to form a homogenized slurry (approximately 14% solids).

The homogenized slurry created in the separation mill will be transferred via auger conveyor into one (1) slope-bottom grit hopper (S-065) with 5,500-gallon holding tank (T-065A) located in the lower level of the Processing Building. The grit hopper is used to allow for the settling of dense grit such as stone, sand, glass, organic calcium (shells and bones), and larger diameter packaging. Settled solids will be removed from the grit hopper by inclined auger conveyor that will deposit the materials into a holding bin for subsequent transfer into the two (2) 40-yd^3 compactors located inside the Processing Building on the main floor. Any liquids will drain from the inclined screw conveyor back into the grit hopper.

The homogenized slurry with settled solids removed (referred to as feedstock) will be pumped (approximately 80,000-tons/year, 55,000-gallons/day) from the grit hopper through piping into the one (1) 320,000-gallon Biomass Equalization Tank (T-100) located to the north of the Processing Building. The Biomass Equalization Tank is used to "condition" (hydraulic buffering and batch equalization) the feedstock. Hydrolysis and acidification (initial steps of the anaerobic digestion process) will begin in the Biomass Equalization Tank, breaking down the complex carbon chains of the food waste into simple volatile fatty acids (e.g., acetic acid, butyric acid, and propionic acid). A center-mounted agitator mounted to the top of the tank will limit stratification.

The "conditioned feedstock" is then transferred via pump and piping from the Biomass Equalization Tank to the one (1) 1,680,000-gallon Digester Tank (T-105) located to the north of the Processing Building and adjacent to the Biomass Equalization Tank. The pumps utilized for transfer are located inside the lower level of the Processing Building (i.e., feedstock does not flow directly from the Equalization Tank to the Digester Tank, but is pumped into and back out of the Processing Building). Transfers occur in set intervals, usually once per hour. The volume of material transferred will be determined by the operator to optimize throughput and biogas production. The anaerobic digestion process is carried out in the Digester Tank. Other than the slow, continuous mixing, all operations within the digester tank are carried out by the anaerobic bacteria. To maintain the optimum temperature in the Biomass Equalization Tank and the digester AST, two (2) natural gas-fired boilers operated on-site will warm a glycol/water solution utilized for non-contact heat transfer via double pipe heat exchanger connected to internal heating piping. Heating will also be performed (when needed) when transferring conditioned feedstock from the Biomass Equalization Tank to the Digester Tank.

The liquid product of anaerobic digestion (referred to as digestate) will be pumped from the Digester Tank to one (1) 30,000-gallon concrete sub-grade holding tank (T-205) located in the lower level of the Processing Building (adjacent to tanks T-050A and T-050B). Concrete sub-grade holding tank T-205 is used for the temporary storage of digestate before the dewatering step. Prior to discharge into T-205, the digestate will pass through a Huber 290 Strainpress® (S-205), a specialized in-line screw press that removes non-digestible materials not previously captured by

the separation mill or grit hopper (e.g., pieces of paper or plastic packaging). The screened digestate will drop from the screw press located on an equipment mezzanine in the Processing Building into tank T-205 via piping; non-digestible materials screened from the digestate will drop into the belt conveyor that runs to the two (2) 40-yd^3 compactors located inside the Processing Building on the main floor.

Digestate will be pumped from the 30,000-gallon concrete sub-grade holding tank for dewatering in one (1) 2-stage belt (Y-211) press located on the main floor of the Processing Building. During transfer of the digestate to the belt press, polymer will be injected into the feed pipe (i.e., in-line addition) to promote formation of flocculation. Undiluted polymer will be received as a liquid emulsion in 275-gallon totes and subsequently diluted in a 2,000-gallon AST (T-210B) located above T-210A on the main floor of the Processing Building. (A 14,000-gallon sub-grade concrete tank (T-210A) located in the lower level of the Processing Building has been constructed for future undiluted polymer storage.) After in-line mixing, digestate is distributed into a 200-gallon tank (T-211) to allow for approximately 2-minutes of flocculation before continuing onto the first stage of the belt press (the gravity belt). The gravity belt allows free water to gravity drain, thickening the digestate. The thickened digestate then moves into the pressure section, where two (2) filter belts progressively squeeze the thickened digestate to further remove free water. The dewatering process creates a "cake" that is approximately 20 to 25% total solids at a rate of 4-tons per hour. This cake is considered finished product that will typically be directly loaded via multi-step auger conveyor system into trucks for off-site shipment and use by other regional composters or agricultural entities. Some of the finished product will be used on-site by the Urban Growers Collective within the urban farming operations inside the hoop houses or approximately two (2) semi-loads (approximately 44-yd^3) per day of finished product will be transported off-site or used in urban farming operations on-site. If excess finished product is generated that cannot be immediately utilized on-site or shipped off-site, the material will be temporarily stockpiled on the concrete floor inside the approximately 5,600-ft^2 Compost Loading and Handling Building (Pole Barn). Trucks will enter Pole Barn for indoor loading and exit the opposite side (i.e., drive through operation). The Pole Barn will also be used for the stockpiling of wood chips and coir (coconut husks) obtained from the City of Chicago or commercial landscaping companies for mixing with finished product. All mixing and loading will take place inside the Pole Barn building.

All water removed by the 2-stage belt press (referred to as filtrate) will gravity drain from the press into two (2) 30,000-gallon tanks (T-250A and T-250B) located in the lower level of the Processing Building. A trench floor drain and sump located in the dewatering area on the main floor of the Processing Building will collect washdown water/overspray that will be transferred via pump from the sump pit into the two (2) 30,000-gallon concrete sub-grade holding tanks (T-050A and T-050B). The filtrate from tanks T-250A and T-250B will be discharged as process wastewater into the municipal combined sewer system through the proposed on-site sampling manhole (Outfall 1A) under an approved Discharge Authorization from the Metropolitan Water Reclamation District of Greater Chicago (MWRD). No "pretreatment" of this wastewater (i.e., the filtrate) is expected to be conducted, or necessary.

Processing Building Air Odor Control (Associate Process to Anaerobic Digestion)
(No Water Use/Wastewater Generation and Discharge)

To address potential odors and any regulated contaminants in the air space within the Processing Building, the building will be maintained at a slight negative pressure and the emissions from the building will be routed via the HVAC system through two (2) control devices: an ionization reactor (a.k.a., ionizer cannon) and an activated carbon guard bed. Two (2) streams of air will be drawn from the Processing Building, one (1) from the southern portion/dewatering area and one (1) from the northern portion/feedstock receiving area. All of this building air will pass through banks of ionization reactor units installed within the building air duct system. In addition to the HVAC system, air vented from the concrete sub-grade holding tanks, the separation mill, and the slope-bottom grit hopper will also be treated by the odor control devices. The air is drawn from the building and sub-grade tanks by two (2) air handlers (i.e., exhaust fans) located outside the west wall of the Processing Building. From the air handlers, air will pass through two (2) 40-ft modified shipping containers, the first with the ionizer cannon installed and the second loaded with 16 activated carbon cells ("carbon guard bed"), before exiting the odor treatment system via vertical stack. There will be no water use or wastewater generation and discharge as a result of this air pollution control process.

Biogas Handling Process Description (Associate Process to Anaerobic Digestion)
(No Water Use/Wastewater Generation and Discharge)

Biogas (consisting primarily of methane) will be produced by the bacteria during the anaerobic digestion process at an estimated generation rate of 400-scfm (AVG) 500-scfm (MAX). The gas will collect within the headspace (top) of the Digester Tank, removed by piping connecting the roof of the tank to the biogas handling equipment. Additionally, any gases produced in the Biomass Equalization Tank, primarily Carbon dioxide and trace levels of Hydrogen sulfide, will be blended with the biogas generated in the digester (by piping running from the Biomass Equalization Tank roof to the Digester Tank roof).

Biogas is typically transferred to the pressure swing adsorption (PSA) system, which is the upgrading equipment that physically separates the methane from the other gasses in the biogas. The upgrading system consists of several equipment skids situated to the north of the Processing Building and east of the Digester Tank. The first equipment skid of the biogas upgrade process includes a compressor, resulting in a pressure of 150-psig and sour water condensation. The second skid consists of the PSA biogas upgrading system that will be used to produce pipeline quality biomethane from the digester biogas. Simply put, the PSA system "cleans up" the biogas by removing Carbon dioxide, Hydrogen sulfide, and other trace gases, producing a concentrated biomethane (the product) and "tail gas" (i.e., the non-methane gases). The PSA system has a maximum biogas input capacity of 400-scfm, producing biomethane at a rate of 226-scfm and tail gas at a rate of 155-scfm.

The biomethane produced in the PSA then passes through another compressor unit and a regulator before being injected back into the natural gas distribution piping. Any excess biomethane that cannot be transferred into the distribution piping (assumed to occur only 120 to 240-hrs/year) will be burned via the on-site flare (F-370), located within the same general location as the biogas

upgrading equipment. (The scenario whereby biomethane is burned in the flare will rarely occur, as biomethane will not be produced if the public utility cannot or will not accept the biomethane, and biogas will be routed directly to the flare instead.) The tail gas discharge from the PSA system will be sent to the thermal oxidizer (F-330), situated adjacent to the flare.

When necessary due to system upsets, maintenance, or when the rate of biogas generation exceeds the design maximum capacity of the PSA system, biogas that cannot be transferred to the biogas upgrading process will be routed directly to the flare. The flare is designed to burn up to a maximum flow rate of over 800-scfm of biogas, though the digester is only capable of generating a maximum flow rate the 500-scfm. As such, the flare is designed to handle the maximum flow rate of biogas the digester can generate (i.e., a 100% by-pass of the upgrading equipment as necessary). There will be no water use associated with this air pollution control equipment. Any condensation removed from the equipment will be handled by the anaerobic digestion process and ultimately discharged as wastewater.

Sections C.5-C.9 Water Intake/Discharge/Treatment

Domestic water will be obtained from the City of Chicago (account numbers 1347789-699385 and 1347789-699386) via tap into the water main located below West 83rd Street. A single 8-in service line runs underground from the water main to the aboveground valve box located near the southwest corner of the facility. The underground piping transitions from below to aboveground inside the valve box, splitting into two (2) lines, a 6-in metered domestic service feed and an 8-in fire water feed. The domestic service feed is equipped with a 3-in diameter meter (Badger Meter, serial 190096455). The 8-in fire water feed includes a metered by-pass line equipped with a 5/8-in meter (Badger Meter, serial 190150616). Attachment D provides a manufacturer's product data sheet for the Badger meters. Both feeds transition back underground after the meters and inside the valve box, run along the western edge of the 35,000-ft^2 Processing Building, entering through the approximate center of the west wall.

Municipal water intake will be utilized for domestic use (i.e., sinks, toilets, etc.), polymer makeup (for improved solids removal during post-digestion dewatering), and equipment/facility wash water. Four (4) operations conducted by the facility will account for the equipment/facility wash water generation:

- Wash down of the exterior of food waste containers, trucks, and tankers following unloading (pre-digestion);
- Rinsing of separated grit prior to transfer to garbage compactors (pre-digestion);
- Dewatering belt press clean rinsing (post-digestion); and
- General housekeeping.

The estimated water use volumes are as follows:

- Domestic use – 385-gallons/day average; 575-gallons/day maximum
- Polymer makeup – 13,500-gallons/day average/maximum
- Wash water – 12,000-gallons/day average; 12,800-gallons/day maximum
    - Pre-digestion and housekeeping – 7,200-gallons/day average/maximum

- Post-digestion – 4,800-gallons/day average; 5,600-gallons/day maximum

All City of Chicago water intake will discharge to the MWRD. The combined total average discharge volume to the MWRD is estimated to be 60,385-gallons/day, consisting of the 385-gallons domestic wastewater and an estimated 60,000-gallons of combined process wastewater. Maximum discharge volume is estimated as 108,575-gallons/day, consisting of 575-gallons domestic wastewater and 108,000-gallons of combined process wastewater. The maximum process wastewater value of 108,000-gallons/day is estimated based on the maximum capacity of the filter press (maximum potential volume generated by 24-hrs operation of the belt press at maximum capability).

The estimated daily discharge to the MWRD will exceed the volume of water intake. The excess volume comes from the imported liquid food waste, with the wastewater ultimately generated by the belt press dewatering step (i.e., filtrate). The filtrate and any other small quantities of wastewater generated by washing down of the filter press will be collected in the two (2) 30,000-gallon concrete sub-grade holding tanks (T-250A and T-250B). This combined process wastewater will be discharged continuously or semi-continuously, depending on the quantities generated and the number of shifts per day the facility is actively dewatering digestate. Process wastewater discharge flowrates are estimated as follows:

- On a weekly basis, it is estimated that 420,000-gallons of process wastewater will be generated and discharged. If the facility is operating on a 7-day basis, that corresponds to a daily discharge volume of 60,000-gallons/day. If the facility is operating 5-days/week, that corresponds to a daily discharge volume of 84,000-gallons/day.
- When discharging, the typical discharge flowrate will be on the order of 80-100-gallons/minute (gpm), though the discharge pump is rated up to a maximum of 220-gpm.
- A daily discharge volume of 60,000-gallons/day at a flow rate of 80-gpm corresponds to 12.5-hours of discharge (of process wastewater, with the domestic wastewater quantities practically insignificant). As such, under typical operations, the facility may be discharging from 7:00 – 19:30 (7-AM to 7:30 PM). However, it is possible that discharge could occur at any time of day, on any day of the week. As such, the RD-118 lists the possible/maximum hours of discharge as 7-AM to 7-AM (i.e., 24-hrs/day).
- The facility has the capability of throttling down the discharge pump, and utilizing the full 60,000-gallons of holding tank storage capacity, so as to slowly discharge over the course of 24-hrs at discharge flowrates as low as approximately 50-gpm.

No regulatory pretreatment of this wastewater (i.e., the filtrate) is required, and no form of treatment is expected to be conducted or necessary to maintain compliance with Appendix B discharge limitations. The two (2) 30,000-gallon concrete sub-grade holding tanks release into a 4-in diameter force main that exits the Processing Building at the western portion of the southern wall.

Additional discharge from the facility will result from continuous discharge of domestic wastewater at an estimated 385-gallons average, 575-gallons maximum. This minimal additional volume will not be collected in the 30,000-gallon concrete sub-grade holding tanks, but will be directly discharged into the gravity sanitary sewer that exits the Processing Building at the

approximate center of the southern building wall and then flows to a manhole (where the 4-inch diameter process wastewater force main also discharges into to create the combined discharge flow).

The facility combined wastewater then flows through an on-site sewer line before discharging into the existing combined sewer system located below West 83rd Street to the south of the facility. Because the already-installed final on-site manhole (located immediately east of the West 83rd Street entrance drive near the south-center property boundary) is not designed to allow flow measurement (inlet and outlet are at 90-degrees from each other), the facility is instead proposing to install an additional manhole ("proposed sampling manhole," designated as Outfall 1A) just upstream of the final manhole, at a location approximately 26.5-ft west of the western edge of pavement of the West 83rd Street entrance driveway, at the location depicted in DAI's Figure 3 in Attachment B and in the Site Utility Plan in Attachment C. This proposed sampling manhole will allow installation of a flume so as to measure flow and will also support the placement and operation of an automatic sampler. Attachment E includes design specifications for the proposed sampling manhole, which is designated as Outfall 1A (instead of the unsuitable final on-site manhole). Collection of discharge samples at the proposed sampling manhole will still include the facility combined wastewater (no blind ties or other connections exist subsequent to the sampling manhole), therefore the sampling manhole will be representative of combined facility discharge. There are no blind connections to the final manhole. In other words, the flow in the sampling manhole will always be exactly the same flow in terms of volume and characteristics as the flow through the final manhole.

In order to accurately monitor the wastewater discharge rate, an 8-in Palmer-Bowlus flume will be installed within the sampling manhole (Outfall 1A). A typical product cut sheet for a Palmer-Bowlus flume is also included in Attachment E. (The exact model/serial number will later be provided to MWRD in a revised User Charge Methodology Proposal, upon purchase of the flume.) The discharge volume through the Palmer-Bowlus flume is proposed to be monitored by a VegaPuls C21 radar level (non-contact) and Vegamet 861 flow computer (exact serial number to be provided to MWRD in a revised User Charge Methodology Proposal, upon purchase). As a flow-based meter used to directly tally discharge, calibration of the meter and flume will be checked monthly (and if necessary, recalibrated) and an annual calibration/certification will be completed by a factory-authorized representative, as required. It is understood that the totalizer must be a non-resettable totalizer. The specifications for the proposed flow measurement device manufactured by Vega is provided in Attachment F.

Discharge samples will be collected from the proposed sampling manhole during collection of semi-annual compliance and User Charge (annual at a minimum) sampling. Please note, the facility will additionally install a separate in-line flow meter and auto sampler inside the Processing Building at a point before the processing wastewater mixes with any sanitary wastewater. This auto sampler will be used for process monitoring and control purposes, not MWRD sampling requirements.

ATTACHMENT B
FIGURES

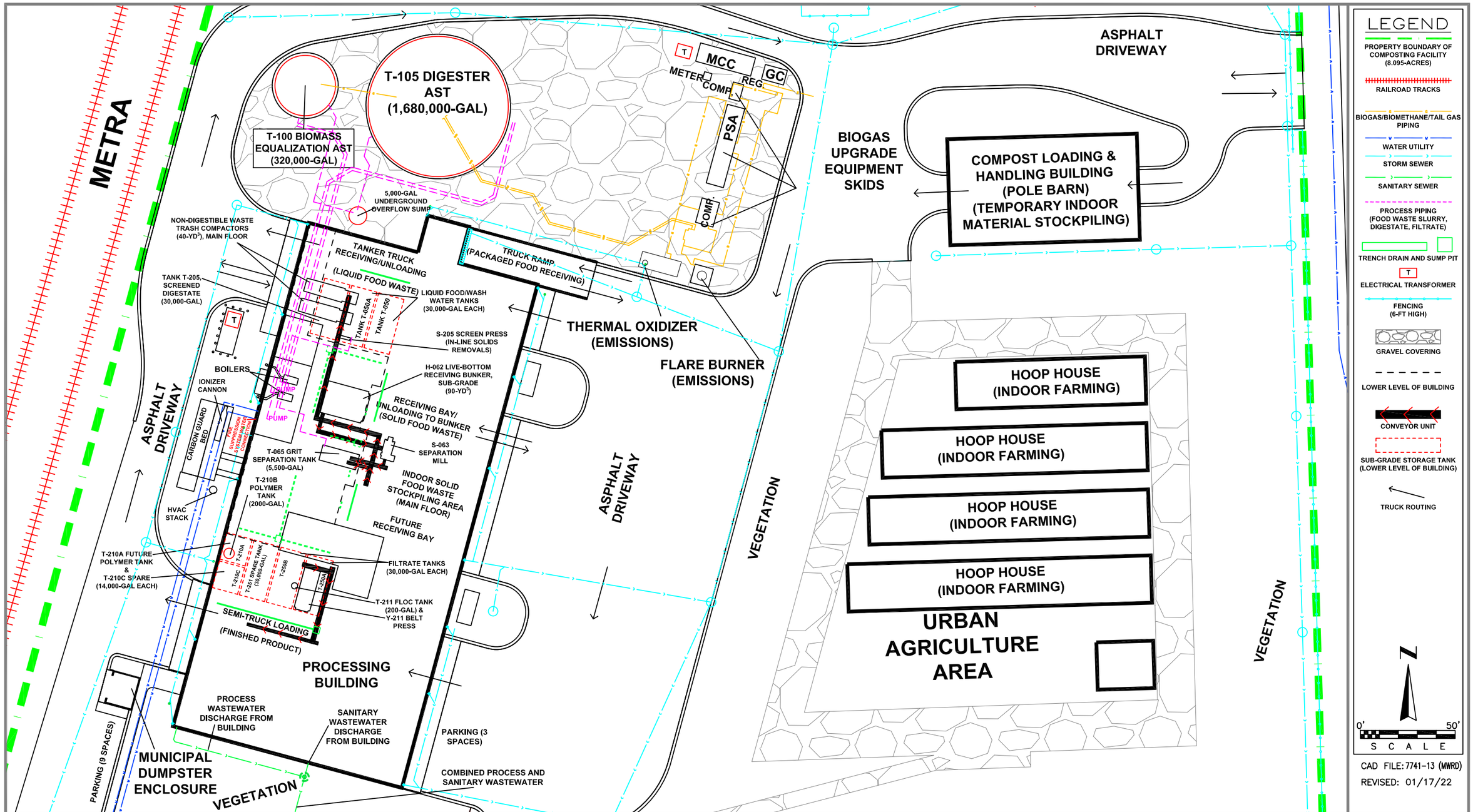

DAI ENVIRONMENTAL

GREEN ERA RENEWABLE ENERGY AND URBAN FARMING CAMPUS
650 WEST 83RD STREET
CHICAGO, ILLINOIS

FIGURE 3A
SITE DETAIL SHOWING
PROCESS OPERATIONS AND EQUIPMENT

AABBITT ADHESIVES, INC.

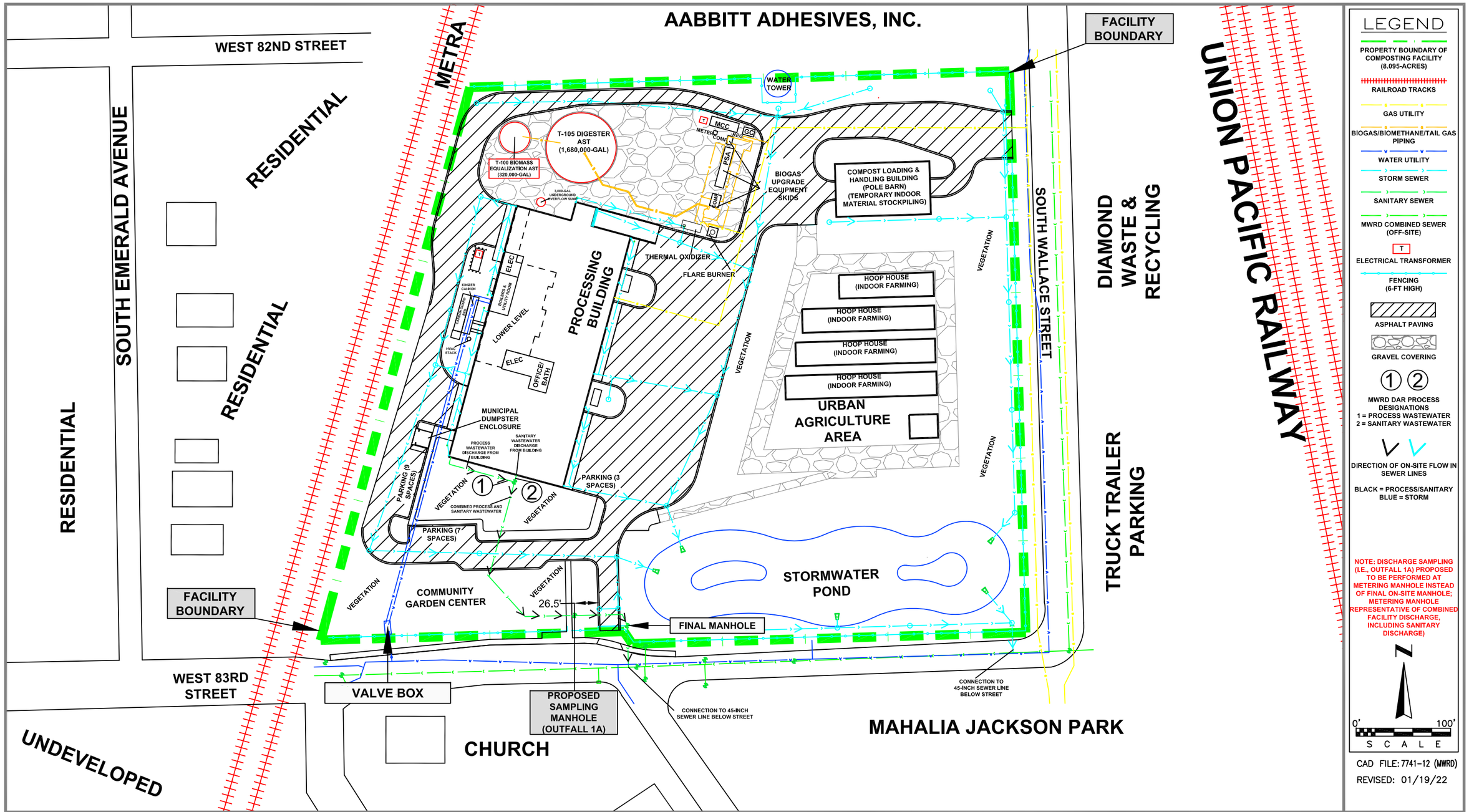

LEGEND

- PROPERTY BOUNDARY OF COMPOSTING FACILITY (8.095-ACRES)
- RAILROAD TRACKS
- GAS UTILITY
- BIOGAS/BIOMETHANE/TAIL GAS PIPING
- WATER UTILITY
- STORM SEWER
- SANITARY SEWER
- MWRD COMBINED SEWER (OFF-SITE)
- T — ELECTRICAL TRANSFORMER
- FENCING (6-FT HIGH)
- ASPHALT PAVING
- GRAVEL COVERING
- ① ② — MWRD DAR PROCESS DESIGNATIONS 1 = PROCESS WASTEWATER 2 = SANITARY WASTEWATER
- DIRECTION OF ON-SITE FLOW IN SEWER LINES
- BLACK = PROCESS/SANITARY
- BLUE = STORM

NOTE: DISCHARGE SAMPLING (I.E., OUTFALL 1A) PROPOSED TO BE PERFORMED AT METERING MANHOLE INSTEAD OF FINAL ON-SITE MANHOLE; METERING MANHOLE REPRESENTATIVE OF COMBINED FACILITY DISCHARGE, INCLUDING SANITARY DISCHARGE)

N

0' 100'

S C A L E

CAD FILE: 7741-12 (MWRD)

REVISED: 01/19/22

DAI ENVIRONMENTAL

GREEN ERA RENEWABLE ENERGY AND URBAN FARMING CAMPUS
650 WEST 83RD STREET
CHICAGO, ILLINOIS

FIGURE 3
SITE PLAN

ATTACHMENT C
SITE UTILITY PLAN

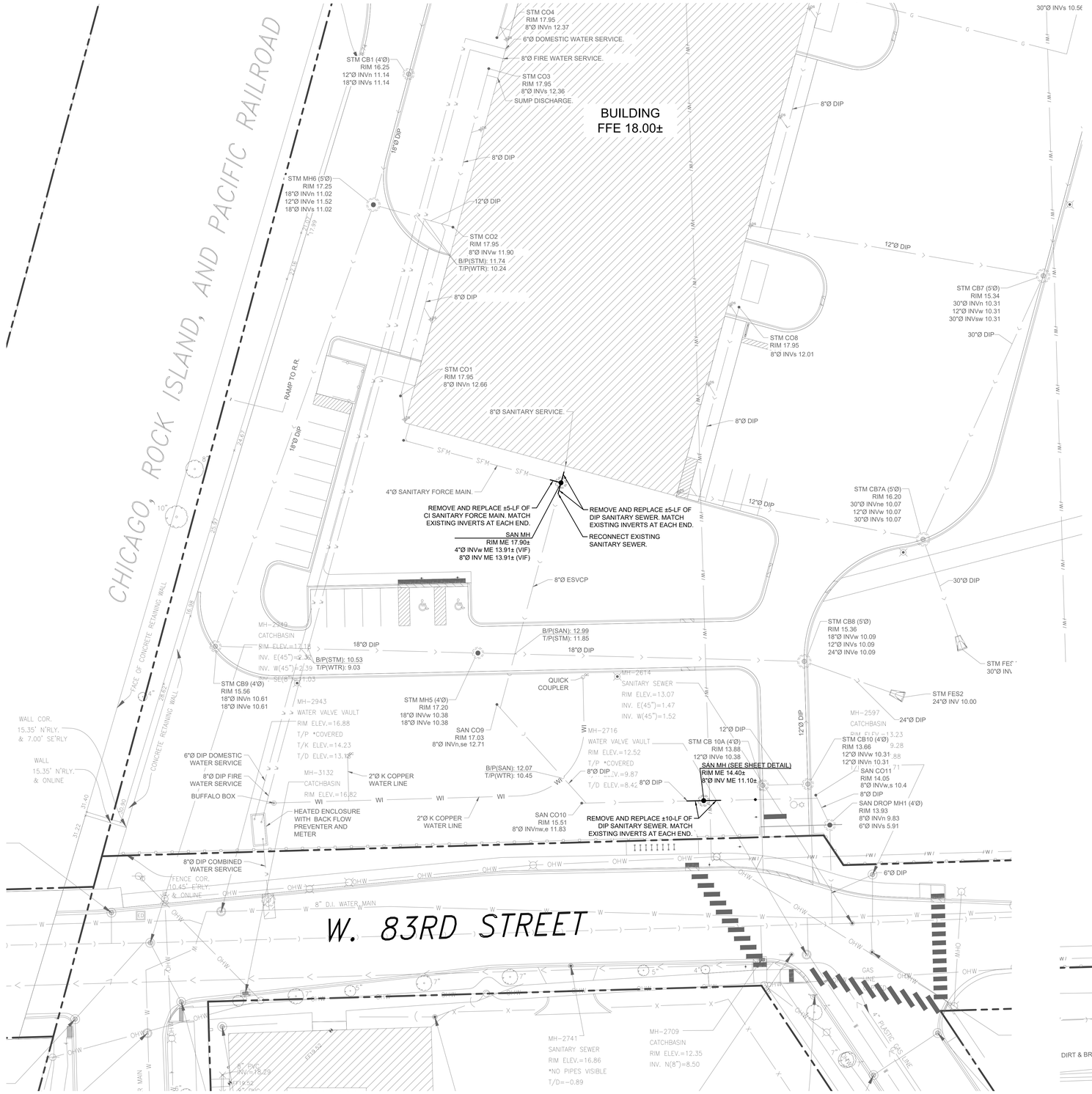

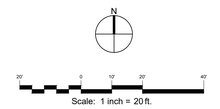

LEGEND:

- PROPERTY LINE
- EXISTING BUILDING
- SANITARY SEWER
- 4'Ø MANHOLE (MH)
- CLEAN OUT (CO)

NOTES:

1) EXISTING CONDITIONS ARE SHOWN BASED ON DESIGN FILES DATED 06/29/2021. ALL SITE CONDITIONS AS THEY PERTAIN TO THE PROJECT SCOPE SHALL BE VERIFIED IN FIELD PRIOR TO CONSTRUCTION. FINDINGS TO BE REPORTED TO EOR/AOR.

2) SANITARY FORCE MAIN SHALL BE 18" BELOW BOTTOM OF PIPE ELEVATION OF EXISTING WATER SERVICE WHEN 10' OF HORIZONTAL SEPARATION IS NOT ACHIEVABLE.

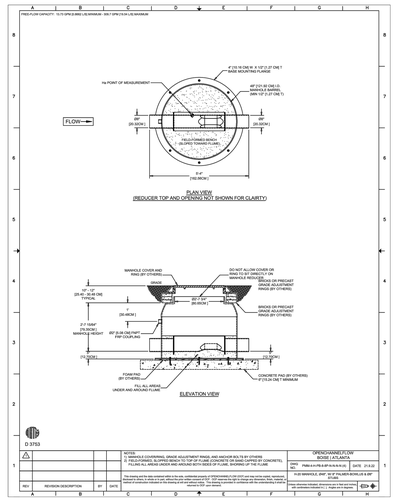

DTL MANHOLE DETAIL

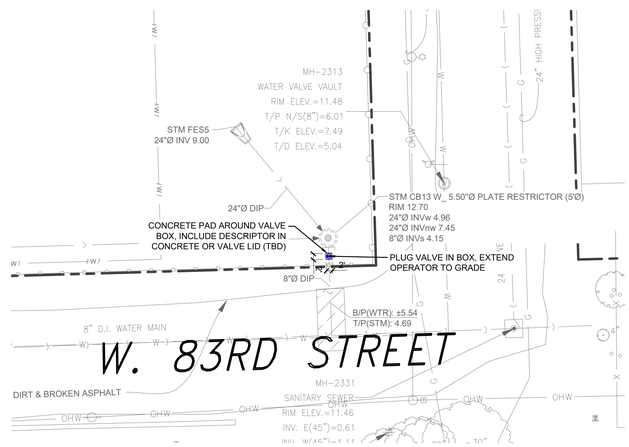

1 PLUG VALVE AT BASIN OUTLET DETAIL
SCALE: 1" = 20'

GREEN ERA DIGESTER
- FORCEMAIN
650 WEST 83RD Street
Chicago, IL. 60620

Client

GREEN ERA
EDUCATIONAL NFP
GREEN ERA
SUSTAINABILITY, LLC
650 WEST 83RD Street
Chicago, IL. 60620

Project Team

CIVIL ENGINEER/LANDSCAPE ARCHITECT
TERRA ENGINEERING LTD.
225 W Ohio Street - Suite 400; Chicago, IL 60654
(T) 312-467-0123 | (F) 312-467-0220

Revisions

Date	Issue
10/15/2021	UTILITY ROUTING

Stamp

Title

SITE UTILITY PLAN

Sheet No.

C1.0

TERRA Project No. 15-194-005

Oct 15, 2021 - 11:53am
M:_2015\15-194-001 Green Era Digester_15-194-005 Green Era Digester - Forcemain\Design\Site\Drawings\C1.0 Site Utility Plan.dwg
Adobe PDF

Mr. Francis Wambi
MWRDGC
January 27, 2022

ATTACHMENT D
WATER METER INFORMATION

Encoders
High Resolution Encoders

HR-E® LCD Encoder

DESCRIPTION

Applications: The High Resolution encoder (HR-E LCD) is a fully electronic, solid-state encoder with no moving parts. It is designed for use with all current Badger Meter Recordall® Disc, Turbo Series, Compound Series, Combo Series and Fire Service meters and assemblies. The HR-E LCD provides connectivity with Badger Meter ORION® and GALAXY® AMR/AMI endpoints and other AMR/AMI technology solutions approved by Badger Meter.

NOTE: For more detailed information, refer to the document *HR-E LCD Encoder User Manual*, available at *www.badgermeter.com*.

Field Programmable: The HR-E LCD encoder comes standard as factory programmed to customer specifications, with the option for field programming the unit of measure, meter type, meter model, digit resolution from the encoder, billing units, and rate-of-flow time and units. Programming is performed through the IR port via a computer.

Electronic Resolution: Standard encoded output from the HR-E LCD is nine digits.

Status Indicators: Status indicators are sent as part of the encoder extended message to AMR/AMI systems such as ORION Cellular, Fixed Network and Migratable endpoints that are capable of receiving an extended message. The details can also be read through an IR interface.

Mounting: Icons on the HR-E LCD encoder face indicate encoder status and alarm conditions. The fully potted encoder assembly has a bayonet mount compatible with all Recordall Disc, Turbo Series, Compound Series, Combo Series and Fire Series meters and assemblies. The bayonet mount positions the encoder in any of four orientations for visual reading convenience. The HR-E LCD encoder can be removed from the meter without disrupting water service.

Magnetic Drive Communication: The HR-E LCD encoder detects movement of the wet side meter magnet with magnetic sensors to provide reliable and dependable encoded communication.

Tamper-resistant Features:
Unauthorized removal of the HR-E LCD encoder is inhibited by a tamper-resistant Torx® seal screw. Torx seal screws are provided as standard accessories. Optional proprietary tamper-proof screws are also available.

Magnetic sensors detect and report an attempted encoder removal. In addition, the HR-E LCD encoder is resistant to magnetic tampering. The encoder detects an attempted tamper—as well as encoder removal—and sends a tamper alarm in either situation. Approved endpoints capable of receiving the alarms, such as ORION Cellular, Fixed Network and Migratable endpoints, can then report the tamper condition to the meter reading software.

SPECIFICATIONS

Encoder type	Straight reading, permanently sealed, electronic LCD absolute encoder with field-programmable option
Encoder display	Status indicators, unit of measure, billing units, automatic toggle between 9-digit and 6-digit consumption (segmented leak detector in this mode), rate of flow, meter model
Unit of measure	U.S. gallons, Imperial gallons, cubic feet, cubic meters, and liters clearly identified on register face
Flow rate	Seconds, minutes, and hours
Numerals	7 mm (0.28 in.) high
Weight	11 ounces
Humidity	0…100% condensing
Temperature	Storage: – 40…60° C (– 40…140° F) Max. ambient for 1 hr: 70° C (158° F) Electronics & Display: –10…60° C (14…140° F)
Status indicators	Electronic and visual icons for: meter functioning correctly, meter alarm (indicates temperature limits exceeded, magnetic tamper or encoder removal), reverse flow, suspected leak, 30-day no usage, end of battery life
Signal output	Industry standard ASCII format
Signal type	Three-wire synchronous for AMR/AMI solutions Red = clock/power; Black = ground; Green = data
Battery	Lithium thionyl chloride AA cell, fully encapsulated within encoder housing
Battery Life	20 years (calculated)

Badger Meter

ENC-DS-01763-EN-06 (January 2021)

Product Data Sheet

Construction: The housing of the HR-E LCD encoder is constructed of an engineered polymer enclosure and a polycarbonate lens. For long-term performance, the enclosure is fully encapsulated, weatherproof, and UV-resistant to withstand harsh environments and to protect the electronics in flooded or submerged pit applications. An epoxy potting (patented design - 8,482,908) comprises the encoder bottom. Due to this unique sealing, the HR-E LCD exceeds all applicable requirements of AWWA Standard C706 and C707.

Wire Connections: The HR-E LCD encoder is available with an in-line connector for easy connection and installation to AMR/AMI endpoints. It is also available with a flying lead for a field splice connection, or fully prewired to an AMR/AMI endpoint.

Operating Characteristics: The HR-E LCD encoder is shipped in storage mode so a meter status alarm is not triggered. In storage mode, the meter model screen is displayed. Upon sensing two revolutions of the meter magnet, the encoder goes into normal operation mode. The display then automatically toggles between these four modes:

- 9-digit consumption displays for 45 seconds.
- 6-digit consumption (segmented leak detector in this mode) displays for 5 seconds.
- Rate of flow displays for 5 seconds.
- Meter model displays for 5 seconds.

DIMENSIONAL DRAWINGS

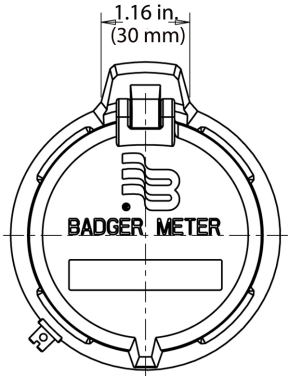

Figure 1: Top view

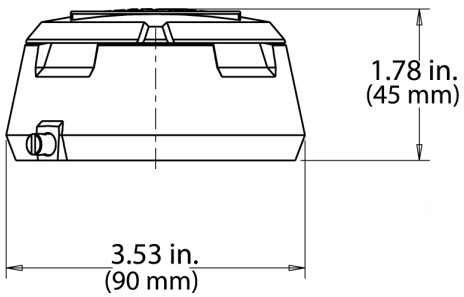

Figure 2: Front view

MEASUREMENT RESOLUTION

The electronic encoder output resolution of the HR-E LCD is as noted below.

Recordall Disc Series	Size (in.)	9-dial encoder output (gal)	9-dial encoder output (ft^3)	9-dial encoder output (m^3)
LP	5/8, 5/8 x 3/4	0.01	0.001	0.0001
M25	5/8 , 5/8 x 3/4	0.01	0.001	0.0001
M35	3/4	0.01	0.001	0.0001
M40	1	0.01	0.001	0.0001
M55	1	0.01	0.001	0.0001
M70	1	0.01	0.001	0.0001
M120	1-1/2	0.1	0.01	0.001
M170	2	0.1	0.01	0.001

Recordall Turbo Series	Size (in.)	9-dial encoder output (gal)	9-dial encoder output (ft^3)	9-dial encoder output (m^3)
T160	1-1/2	0.1	0.01	0.001
T200	2	0.1	0.01	0.001
T450	3	0.1	0.01	0.001
T1000	4	0.1	0.01	0.001
T2000	6	1	0.1	0.01
T3500	8	1	0.1	0.01
T5500	10	1	0.1	0.01
T6200	12	10	1	0.01
T6600	16	10	1	0.01
T10000	20	10	1	0.01

Recordall Compound Series	Size (in.)	9-dial encoder output (gal)	9-dial encoder output (ft^3)	9-dial encoder output (m^3)
High Side T200	2	0.1	0.01	0.001
Low Side M25	2	0.01	0.001	0.0001
High Side T450	3	0.1	0.01	0.001
Low Side M25	3	0.01	0.001	0.0001
High Side T1000	4	0.1	0.01	0.001
Low side M35	4	0.01	0.001	0.0001
High Side T2000	6	1	0.1	0.01
Low Side M35	6	0.01	0.001	0.0001
High Side T3500	8	1	0.1	0.01
Low side M120	8	0.1	0.01	0.001

NOTE: For Fire Service Meters and Assemblies, please refer to appropriate Disc and TSM information provided above.

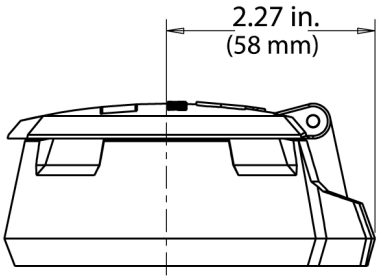

Figure 3: Left side view

SMART WATER IS *BADGER METER*

GALAXY, ORION and Recordall are registered trademarks of Badger Meter, Inc. Other trademarks appearing in this document are the property of their respective entities. Due to continuous research, product improvements and enhancements, Badger Meter reserves the right to change product or system specifications without notice, except to the extent an outstanding contractual obligation exists. © 2021 Badger Meter, Inc. All rights reserved.

www.badgermeter.com

Legacy Document Number: LCD-T-01

Mr. Francis Wambi
MWRDGC
January 27, 2022

ATTACHMENT E
PROPOSED SAMPLING MANHOLE AND FLUME SPECIFICATIONS

GASVODA & ASSOCIATES, INC.
"Helping people use water efficiently"

1530 Huntington Drive
Calumet City, IL 60409
Phone 708-891-4400
Fax 708-891-5786

PROPOSAL

TO:	Ned Mast	DATE:	September 23, 2021
	Green Arrow Engineering		
	2759 Long Road	PROJECT:	Open Channel Flow
	Wooster, OH. 44691		Packaged Metering Manhole
PHONE:	(330) 465-9132	ENGINEER:	
E-MAIL:	nmast@greenarrowllc.com		

The seller hereby offers the following equipment subject to all terms & conditions noted on this contract:

We are pleased to offer the following proposal for your review and consideration on the above-named project. Kindly review our offer in its entirety and let us know of any further questions or requirements. This offer is for providing the equipment listed herein for installation by others. The Terms and Conditions listed herein shall apply to this offer. Please review them carefully as they have changed.

QTY	DESCRIPTION
(1)	Open Channel Flow 8" Palmer-Bowlus Pac aged Metering Manhole Fiberglass construction 48-inch diameter 2-feet 7 1/4-inches deep 31-3/4" opening traffic reducer (grade rings, frame, and cover by others) 2-inch coupling Integral base with e ternal mounting flange 8-inch Palmer-Bowlus flume 8-inch stubs Stainless steel ultrasonic mounting brac et

Grade rings, frame, and cover by others
Anchor bolts, foam pad, and concrete slab by others
Ta es and freight not included in this proposal. Freight is prepay & add

Quotation Based Solely Upon OCF Drawing(s) PMM-4-H-PB-8-8P-N-N-N-N (4).

Your price for the equipment and services as offered herein will be: $ 8,140.00 *

****Subject to and in accordance with the Terms & Conditions listed in this proposal with no exceptions, or alternative pricing will apply.***

FREE-FLOW CAPACITY: 13.73 GPM [0.8662 L/S] MINIMUM - 309.7 GPM [19.54 L/S] MAXIMUM

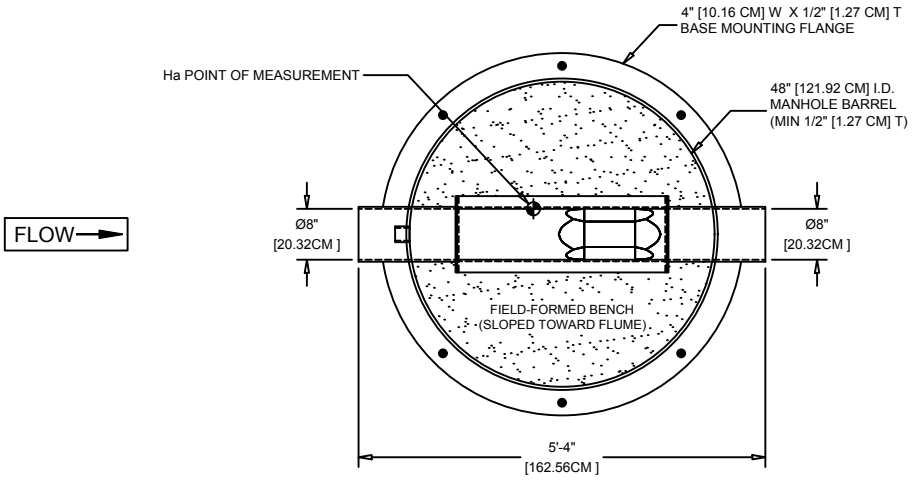

PLAN VIEW
(REDUCER TOP AND OPENING NOT SHOWN FOR CLAIRTY)

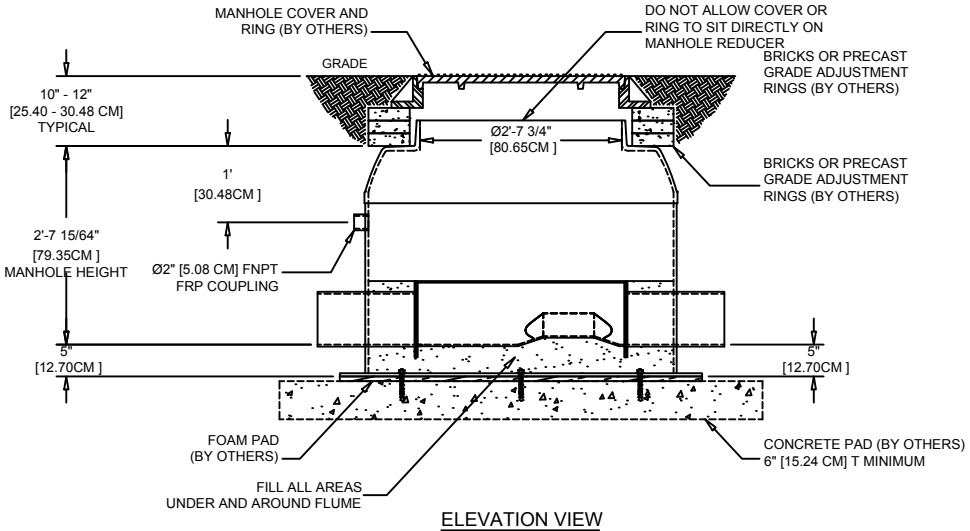

ELEVATION VIEW

D 3753

REV	REVISION DESCRIPTION	BY	DATE
1			

NOTES:
1) MANHOLE COVER/RING, GRADE ADJUSTMENT RINGS, AND ANCHOR BOLTS BY OTHERS
2) FIELD-FORMED, SLOPPED BENCH TO TOP OF FLUME (CONCRETE OR SAND CAPPED BY CONCRETE), FILLING ALL AREAS UNDER AND AROUND BOTH SIDES OF FLUME, SHORING UP THE FLUME

This drawing and the data contained within is the sole, confidential property of OPENCHANNELFLOW (OCF) and may not be copied, reproduced, disclosed to others, in whole or in part, without the prior written consent of OCF. OCF reserves the right to change any dimension, finish, material, or method of construction indicated on this drawing at will and without notice. This drawing is provided in confidence with the understanding it shall be returned to OCF upon demand.

OPENCHANNELFLOW
BOISE | ATLANTA

DWG NO. PMM-4-H-PB-8-8P-N-N-N-N (4)

DATE 21.9.22

H-20 MANHOLE, Ø48", W/ 8" PALMER-BOWLUS & Ø8" STUBS

Unless otherwise indicated, dimensions are in feet and inches, with centimeters indicated in [ ]. Angles are in degrees.

PALMER-BOWLUS FLUMES

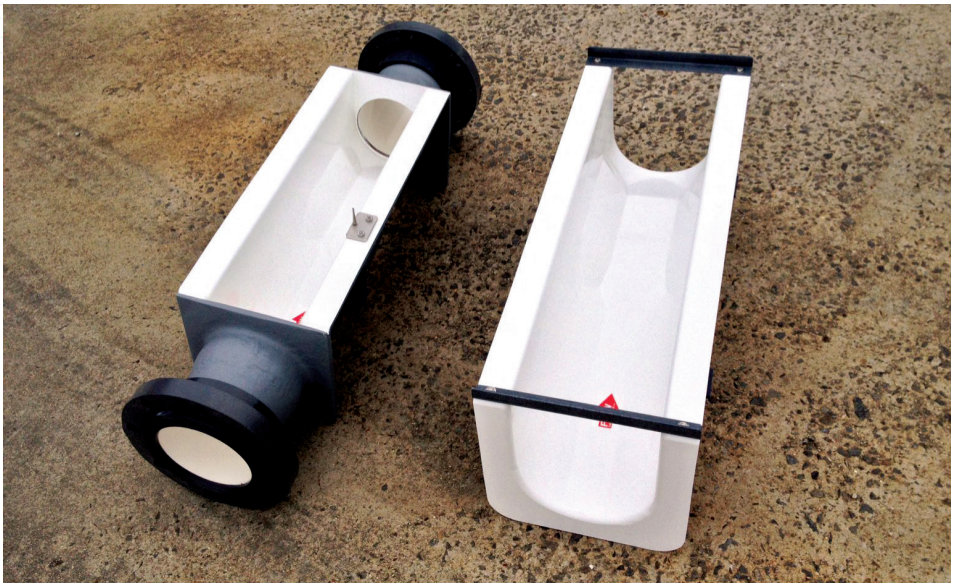

The Palmer-Bowlus Flume is a class of long-throated flumes developed in the 1930's for measuring municipal sewage in existing conduits with minimal site requirements, other than suitable slope.

Now the second most common class of flume used - behind only the Parshall flume - the PalmerBowlus flume is most often used to measure municipal sewage or industrial discharges.

Unlike other classes of flumes, the Palmer-Bowlus flume is available vin a range of configurations, including:

- Permanent Style with Approach
- Short Section Style with Approach
- Permanent Style without Approach
- Insert Style
- Cutback Style

The primary differences between the configurations is how the flume is to be installed (whether in a pipe - Insert / Cutback styles - or inline with a pipe - Permanent / Short Section styles) and whether or not an approach section is present.

APPLICATIONS

- *Industrial Discharge*
- *Municipal Sewer Flows*
- *Cross Jurisdiction Flows*
- *Sewage Treatment Plants*
- *Spring Discharge*
- *Well Pumping Tests*

CUSTOMIZATION

Openchannelflow offers a wide range of mounting, connection, and flow / level measurement accessories to help you customize your flume to your specific site needs.

PALMER-BOWLUS FLUMES *(continued)*

Proprietary Design

Unlike standardized flumes likethe Cutthroat, HS / H / HL, Parshall, or RBC, the Palmer-Bowlus flume is proprietary to each flume manufacturer. While an industry standard does exist (ASTM D 5390), the standard is for the general class of Palmer-Bowlus flumes and not for a specific design. It is common, however, for most Palmer-Bowlus flumes to have a u-channel cross-section with a trapezoidal shaped throat.

As no design standard exists, the discharge characteristics of one manufacturer's Palmer-Bowlus flume should not be assumed to be indentical to those of another manufacturer.

Being a long-throated flume, discharge relationships for intermediate or non-standard sized Palmer-Bowlus flumes can be generated.

Application

Palmer-Bowlus flumes are usually sized the same as the pipe from which they are to measure flow. However, to achieve maximum accuracy, the size of the flume should be determined by the anticipated flow rate.

It is not uncommon, therefore, to see a Palmer-Bowlus flume one size larger or smaller applied to a given line size. It is unusual, however, to see more than a one size difference between the flume size and the pipe size due to the transitions necessary to accomplish this.

Palmer-Bowlus flumes do have a smaller useful range of flow rates than a Parshall flume, and the resolution is not a good as that of a Parshall flume, but these limitations are generally outweighed by lower cost and ease of installation.

As with other long-throated flumes, Palmer-Bowlus flumes do have high (85%) submergence rates, making them a good choice in applications where submergence is of concern.

MOUNTING

- *Free-Standing*
- *Earthen Channel*
- *Packaged Metering Manholes*
- *Above Grade Enclosures*

FLOW/LEVEL

- *Staff Gauges*
- *Stilling Wells*
- *Bubbler Tubes*
- *Ultrasonic Sensor Brackets*

END CONNECTIONS

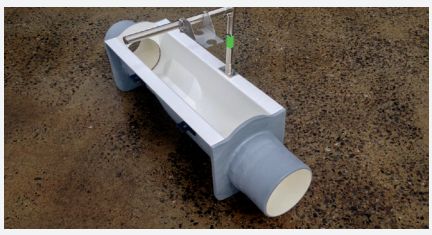

- *Pipe Stubs*
- *Flanges*
- *Caulking Collars*
- *Wing Walls*

Mr. Francis Wambi
MWRDGC
January 27, 2022

ATTACHMENT F
PROPOSED FLUME WATER LEVEL AND FLOW MEASURING DEVICE INFORMATION

GREEN ARROW ENGINEERING	**Equipment Spec** **Instruments**	

LC-255, Level Transmitter for flume, Radar

REVISION LEVEL	DATE	DESCRIPTION	BY
R0	11/10/21	INITIAL RELEASE	NMAST

GREEN ARROW ENGINEERING	**Equipment Spec Instruments**	

Section 1 - Basic Equip. Data, Radar					
1.0	Tag No.	LC-255			
1.1	Type	RADAR	1.2	Mfg.	VEGA
1.3	Mounting	Rear thread and jam nut from bracket.	1.4	Model No.	VEGAPULS C 21
1.5	Comms	HART			

Section 2 - Basic Equip. Data, Flow transmitter/controller					
2.0	Tag No.	FIC-255			
2.1	Type	Flow computer	2.2	Mfg.	VEGA
2.3	Mounting	Bracket	2.4	Model No.	VEGAMET 861
2.5	Comms	HART	2.6	Onboard memory	Memory card (back-up) SD Card
2.7	Output 1	4..20 flow rate	2.8	Output 2	Pulse signal
2.9	Output 3	Failure relay			

Section 3 - Installation Notes		
3.0	Mounting	Coordinate bracket position with flume mfg. for correct placement.
3.1	Thread Sealant	Use Teflon tape to seal threads. If using threaded SS nipples into SS valves, use Blue Monster “Nickel Guard” thread tape to prevent galling or use regular Teflon tape with brushed on nickel based anti-seize compound.
3.2	Labeling	All instruments should be labeled with the P&ID tag number. Use hanging chain tags for small instruments. Use ¾-high letters for all others. All cables and wires shall be marked per the schematic wiring plan.

Inlet channel

Reliable

High measurement accuracy, independent of temperature influence

Cost effective

Low maintenance requirements

User friendly

Flow-proportional output signal

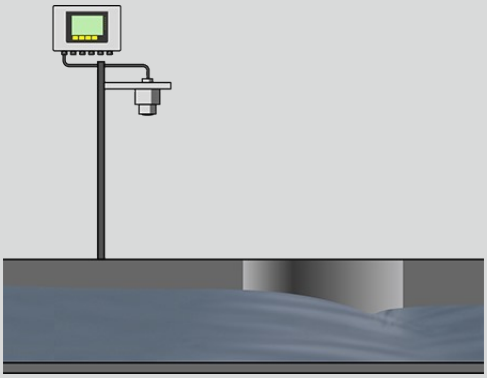

Flow-rate measurement in open channels

Sewage and rainwater are often transported to the treatment plant in open collection channels or flumes. The flow rate is measured at various points in these channels. Measurement of the water flow at the inlet and outlet of the treatment plant is the basis for the calculation of tariffs and operating costs.

More details

VEGAPULS C 21

Flow measurement of the wastewater inlet with radar in an open channel

- High plant availability thanks to wear and maintenance free measurement
- Exact measuring results unaffected by ambient conditions.
- Sensor-integrated flow characteristic curves make it also possible to have a direct flow-proportional output signal
- Secure wireless operation through Bluetooth with smartphone, tablet or PC

Show Product

VEGAMET 861

Flow computation, control and display for open channel flow measurement structures

- Highly accurate calculation of the flow rate
- Clear, simple display of flow rate and total flow volume
- Fast setup and commissioning thanks to simple menu navigation and application wizards

Show Product

VEGAPULS C 21 Show Product
Measuring range - Distance 15 m
Process temperature -40 ... 80 °C
Process pressure -1 ... 3 bar
Accuracy ± 2 mm
Frequency 80 GHz
Beam angle 8°
Materials, wetted parts PVDF
Threaded connection G1½ / G1, 1½ NPT / 1 NPT, R1½ / R1
Seal material FKM
Protection rating IP66/IP68 (3 bar), Type 6P

VEGAMET 861 Show Product
Protection rating IP66/IP67, Type 4X
Input 1 x 4 … 20 mA/HART sensor input 2x digital input
Output 1 x 0/4 … 20 mA current output 1x failure relay (instead of operating relay) 4x operating relay
Ambient temperature -40 ... 60 °C
Measured value memory Internally SD card

ATTACHMENT 13
ENVIRONMENTAL ASSESSMENT DOCUMENTATION

15-59594

0316715228 – Cook
Chicago/Dept. of Fleet & Facility Mgmt.
SR/Tech

FILE COPY

Phase I Environmental Site Assessment

650 West 83rd Street
Chicago, Cook County, Illinois
PINs: 20-33-119-024
20-33-124-001
20-33-124-002

Terracon Project No.: A2157000-01
Report Date: May 1, 2015

RECEIVED
JUN 01 2015
IEPA/BOL

Prepared for:

City of Chicago, Department of Fleet and Facility Management
30 North LaSalle Street, 3rd Floor
Chicago, Illinois 60602-2575

Prepared by:

Terracon Consultants, Inc.
650 West Lake Street, Suite 420
Chicago, Illinois 60661

IEPA - DIVISION OF RECORDS MANAGEMENT
RELEASABLE
JUN 08 2015
REVIEWER MED

May 1, 2015

Terracon

Ms. Sarah Rubin
City of Chicago, Department of Fleet and Facility Management
30 North LaSalle Street, 3rd Floor
Chicago, Illinois 60602-2575

Phone: [312] 744-7205
Email: sarah.rubin@cityofchicago.org

Re: Phase I Environmental Site Assessment
650 West 83rd Street
Chicago, Cook County, Illinois
PINs: 20-33-119-024
20-33-124-001
20-33-124-002
Terracon Project #: A2157000-01

Dear Ms. Rubin:

Terracon Consultants, Inc. (Terracon) is pleased to submit the enclosed Phase I Environmental Site Assessment (ESA) report for the above-referenced site. This assessment was performed in accordance with Task Order Request (TOR) No. 14-2FMEHS-00020.

Terracon appreciates the opportunity to perform these services for you. Please contact us if you have questions regarding this information or if we can provide any other services.

Sincerely,
Terracon Consultants, Inc.

Shweta Mehta for:
Lauren F. Trzaskus
Staff Geologist

Richard O'Brien for:
Rachelle Christian, P.G.
Senior Project Manager

Richard M. O'Brien, PE
Senior Project Manager

IEPA - DIVISION OF RECORDS MANAGEMENT
RELEASABLE
JUN 08 2015
REVIEWER MED

I, Rachelle Christian, declare that, to the best of my professional knowledge and belief, I meet the definition of Environmental Professional as defined in Section 312.10 of this part. I have the specific qualifications based on education, training, and experience to assess a property of the nature, history, and setting of the subject property. I have developed and performed the All Appropriate Inquiries in conformance with the standards and practice set forth in 40 CFR Part 312.

TABLE OF CONTENTS

EXECUTIVE SUMMARY **1**

1.0 INTRODUCTION **6**

1.1 Project Overview 6

1.2 Site Description 6

1.3 Scope of Work 7

1.4 Limitations and Exceptions 7

1.5 Standard of Care 8

1.6 Reliance 9

1.7 Client Provided Information 9

2.0 PROPERTY OVERVIEW **10**

2.1 Property Location and Land Use 10

3.0 PROPERTY BACKGROUND/OPERATING HISTORY **12**

3.1 Review of Aerial Photographs 12

3.2 Review of Topographic Maps 13

3.3 Review of Sanborn Maps 14

3.4 Review of City Directories 16

3.5 Title Search / Environmental Lien Search 18

3.6 Previous Reports 18

4.0 REGULATORY REVIEW **21**

4.1 Regulatory Database Search and Significant Findings 22

4.2 Freedom of Information Act (FOIA) Requests and Significant Findings 25

4.2.1 City of Chicago 25

4.2.2 IEPA 26

4.2.3 Office of the State Fire Marshal 26

4.3 Interviews 26

5.0 PROPERTY INSPECTION **27**

5.1 Property Reconnaissance 27

5.2 Adjacent Properties Reconnaissance 28

5.3 Building Inspection 29

6.0 CONCLUSIONS AND RECOMMENDATIONS **30**

TABLE OF CONTENTS (cont.)

TABLES

Table 1 Summary of RECs, Historical RECs, and Controlled RECs

EXHIBITS

Exhibit 1 Topographic Map
Exhibit 2 Site Features Map
Exhibit 3 PIN Map
Exhibit 4 Wetlands and Floodplain Maps

APPENDICES

APPENDIX A Aerial Photographs
APPENDIX B Topographic Maps
APPENDIX C Sanborn Maps
APPENDIX D Regulatory Database Information
APPENDIX E FOIA Requests/Responses
APPENDIX F Photographs
APPENDIX G Consultant Qualifications

COMMON ACRONYMS

ACM..... Asbestos-containing material
AST..... Aboveground storage tank
ASTM..... ASTM International
AUL..... Activity and use limitation
BGS ..... Below ground surface
BTEX ..... Benzene, toluene, ethylbenzene, and xylenes
CERCLA ..... Comprehensive Environmental Response, Compensation, and Liability Act
CFR ..... Code of Federal Regulations
DOT ..... United States Department of Transportation
EPA..... United States Environmental Protection Agency
HREC..... Historical recognized environmental condition
LUST..... Leaking underground storage tank
MCL ..... Maximum contaminant level
MSDS..... Material safety data sheet
NGVD..... National Geodetic Vertical Datum
NOV..... Notice of violation
NPL..... National Priority List
NRCS..... USDA Natural Resource Conservation Service
OSHA..... Occupational Safety and Health Administration
PCB ..... Poly-chlorinated biphenyl
RCRA..... Resource Conservation and Recovery Act
REC ..... Recognized environmental condition
SPCC..... Spill Prevention, Control and Countermeasure
SWPPP..... Stormwater pollution prevention plan
TEPH ..... Total extractable petroleum hydrocarbons
TPH..... Total petroleum hydrocarbons
TVPH ..... Total volatile petroleum hydrocarbons
TRI..... Toxic release inventory
TSCA ..... Toxic Substances Control Act
USGS..... United States Geological Survey
UST..... Underground storage tank
VCP ..... Voluntary cleanup program
VOC..... Volatile organic compound

Units of measure

sq ft or ft^2..... square feet
mg/kg ..... milligrams per kilogram
mg/l..... milligrams per liter
ug/l..... micrograms per liter
ppb..... parts per billion
ppm.....parts per million

PHASE I ENVIRONMENTAL SITE ASSESSMENT
650 WEST 83RD STREET
CHICAGO, COOK COUNTY, ILLINOIS
PINs: 20-33-119-024-0000, 20-33-124-001-0000, 20-33-124-002-0000

Terracon Project #: A2157000-01

EXECUTIVE SUMMARY

This Phase I Environmental Site Assessment (ESA) was performed in accordance with Task Order Request (TOR) No. 14-2FMEHS-00020 and was conducted consistent with the procedures included in ASTM International (ASTM) E1527-13, *Standard Practice for Environmental Site Assessments: Phase I Environmental Site Assessment Process*. This Phase I ESA was conducted under the supervision or responsible charge of Rachelle Christian, P.G. and Richard M. O'Brien, P.E., Environmental Professionals. Ms. Lauren F. Trzaskus and Mr. Zachary F. Joiner performed the site reconnaissance on January 19, 2015.

A cursory summary of findings is provided below. It should be recognized that details were not included or fully developed in this section, and the report must be read in its entirety for a comprehensive understanding of the items contained herein.

- The site consists of an approximate 9-acre parcel of vacant land located at the northwest corner of South Wallace Street and West 83rd Street in Chicago, Cook County, Illinois (Cook County Permanent Index Numbers [PINs]: 20-33-119-024, 20-33-124-001, and 20-33-124-002).
- The site consisted of undeveloped land in 1897 and unspecified "stock storage" and lumber storage associated with the International Harvester Company from approximately 1910 through 1924. Three 12,000-gallon underground storage tanks (USTs) containing benzene and linseed oil were identified adjacent to a paint storage structure on the northwest corner of the site. USTs were identified in the 1910 and 1924 Sanborn maps and the paint storage structure was identified through 1975. The site was developed with an impounded automotive storage yard from at least 1962 through 2009. The northeast corner of the site was developed with a warehouse structure from 1910 through at least 1964.

  On-site recognized environmental conditions (RECs[1]) identified during the historical document review include the following:

[1] Recognized Environmental Conditions (RECs) are de fined by ASTM E1527-13 as "the presence or likely presence of any hazardous substances or petroleum products in, on, or at a property: (1) due to any release to the environment; (2) under conditions indicative of a release to the environment; or (3) under conditions that pose a material threat of a future release to the environment. *De minimis* conditions are not recognized environmental conditions.

- Potential for wood preservative (such as coal tar/creosote) application and storage to have caused releases in association with lumber stockpiles and rail spurs on site;
- Potential lead-based paint releases from paint storage structure as storage took place on site for at least sixty-five years;
- The potential presence of unknown USTs on the site based on historical industrial operations; and,
- The potential for releases of petroleum products from impounded automobiles stored on site from at least 1962 through 2009.
- The potential for releases from three 12,000 gallon benzene USTs on site was negated by subsurface investigations carried out by Terracon personnel. The samples collected from borings B-1 through B-3, the borings related to the tanks, did not return elevated levels of VOCs following laboratory analysis. The historical benzene USTs constitute a historical REC to the site.

▫ Currently, the site is bordered to the north by vacant structures located at 601 West 81st Street; to the east by South Wallace Street followed by 8149 South Wallace Street (Diamond Waste & Recycling) and truck trailer parking; to the south by South West 83rd Street, a community park, Self Storage, Inc. 8316 South Birkhoff Avenue), and Look Up and Live Full Gospel Ministries (661 West 83rd Street); and, to the west by a Metra elevated rail line. Industrial and fuel storage facilities of various types have been located to the north, east and south of the site in various forms from at least 1897 through the present, and their potential impact to the site represents a REC to the site. Regulatory records are further discussed below.

▫ Visual observations of the site were limited due to a locked enclosure surrounding the site and the presence of snow cover during the site reconnaissance. Fly dumping, including dirt and concrete cylinders, were observed in the southeast and northwest portions of the site. Numerous solid waste and recycling dumpsters were observed in the northeast portion of the site, on the exterior of the locked enclosure.

▫ A 2013 Phase I ESA conducted by Terracon identified potential releases (associated with former on-site lumber stockpiles, paint storage, impounded automobiles, SPILLS listing, and miscellaneous dumped materials), the presence and potential releases associated with three 12,000-gallon benzene and linseed oil USTs, potential presence of unknown USTs, and the potential for impacts from north, east, and south adjoining properties as RECs to the site.

▫ Terracon conducted Phase II ESA work in June 2013, including advancement of 36 soil borings, three of which were converted to groundwater monitoring wells. Follow-up work

was conducted in September and October of 2013, with advancement of 38 additional borings, with one converted to a groundwater monitoring well and four used for soil gas sampling. The combined Phase II ESA report dated October 28, 2013 identified hazardous concentrations of lead in soil in three locations, and polynuclear aromatic hydrocarbons (PNAs) exceeding the default attenuation capacity of soil in the northwestern portion of the site. Additionally, volatile organic compounds (VOCs), PNAs, and inorganics were detected above Tier I Soil Remediation Objectives (SROs). Groundwater samples collected detected lead, manganese, and iron above Tier I Groundwater Remediation Objectives (GROs) for Class I Groundwater. Soil gas samples detected naphthalene above Soil Gas Remediation Objectives for naphthalene for residential properties.

- The site (addressed as 650 West 83rd Street) was identified as a Chicago ENV, Bureau of Land (BOL), and SPILLS facility in the regulatory database report. The site was identified as a Chicago ENV facility due to on-site inspections. The listing did not contain additional information. The BOL listing indicated the site was listed under Inventory No. 0316715228; however, the BOL database did not contain additional information. A release of unknown content and extent was reported to the Office of Emergency Response, which assigned SPILLS No. NL860889 to the release. The Illinois Environmental Protection Agency (IEPA) received notification of the SPILLS incident on August 14, 1986. Additional information was not available for the listing. Based on the unknown content, extent, and location of the release, SPILLS No. NL860889 constitutes a REC to the site.
- The following former facilities were identified in the environmental database report as being located within a 300 foot vicinity of the site:
    - Small Business Admin. (addressed as 8201 South Wallace Street) was identified as a leaking underground storage tank (LUST) facility, located on the east adjacent property across South Wallace Street. A "non-petroleum fuel oil" release was reported to the Illinois Emergency Management Agency (IEMA) on November 7, 1991 and assigned LUST No. 913213. Investigation or remediation reports were not identified on the IEPA LUST Incident Tracker. A No Further Remediation (NFR) determination for the incident was issued on January 26, 2010 with no engineering or institutional requirements. Based on the absence of documented remediation activities and close proximity to the site, LUST No. 913213 constitutes a REC to the site.
    - 8201 South Wallace Street was not identified as a UST facility in the regulatory database report or on the Office of the State Fire Marshal (OSFM) online UST database; however, UST records identified on the City of Chicago's Data Portal indicated the facility contained a 6,000-gallon toluene UST and a 6,000-gallon methyl ethyl ketone UST installed in 1962; a 4,000-

gallon UST with unreported installation date; a 1,000-gallon fuel oil UST installed in 1953; and five 12,000-gallon fuel oil USTs installed in 1952. Dates of removal were not reported. The USTs were not registered with the OSFM. Based on the unknown status (i.e. removed, still in use, abandoned in place, etc.) and close proximity to the site, the USTs constitute a REC to the site.

- Terracon reviewed U.S. Fish and Wildlife Service (FWS) National Wetland Inventory (NWI) Maps for visual indicators to assess the likely presence or absence of regulated wetlands on the site. The NWI maps did not indicate the presence of regulated wetlands on the site. Obvious indications of on-site wetland areas were not observed during the site reconnaissance.

- Urban fill in the City of Chicago typically contains elevated concentrations of polynuclear aromatic hydrocarbons (PNAs) and metals. Based on the historical development of the site and subsurface investigations, urban fill is present on-site and constitutes a REC.

FINDINGS AND CONCLUSIONS

Terracon has performed this Phase I ESA in conformance with the scope and limitations of ASTM Practice E1527-13 of 650 West 83rd Street, Chicago, Illinois, the site. Any exceptions to, or deletions from, this practice are described in Section 1.4 – Limitations and Exceptions of this report.

This assessment revealed evidence of the following on-site RECs:

- Identified areas with hazardous lead, attenuation, VOC, and inorganic impacts to the site's soil, groundwater, and/or soil gas;
- Potential for wood preservative (such as coal tar/creosote) application and storage to have caused releases in association with lumber stockpiles and rail spurs on site;
- Potential lead-based paint releases from paint storage structure as storage took place on site for at least sixty-five years;
- The potential presence of unknown USTs on the site based on historical industrial operations;
- The potential for releases of petroleum products from impounded automobiles stored on site from at least 1962 through 2009;
- SPILLS No. NL860889 based on the unknown content, extent, and location of the release;
- Impacted urban fill was verified to be on-site during 2013 subsurface investigations.

This assessment revealed evidence of the following on-site HREC:

- The historical benzene USTs were based on subsurface investigations carried out by Terracon personnel. The samples collected from borings B-1 through B-3, the borings related to the tanks, did not return elevated levels of VOCs following laboratory analysis.

This assessment revealed evidence of the following off-site RECs:

- LUST No. 913213 (associated with east adjacent 8201 South Wallace Street) based on the absence of documented remediation activities and close proximity to the site;
- The USTs reportedly registered to 8201 South Wallace Street based on unknown status and close proximity to the site.

PHASE I ENVIRONMENTAL SITE ASSESSMENT
650 WEST 83RD STREET
CHICAGO, COOK COUNTY, ILLINOIS
PINs: 20-33-119-024, 20-33-124-001, 20-33-124-002

Terracon Project #: A2157000-01

1.0 INTRODUCTION

1.1 Project Overview

This Phase I Environmental Site Assessment (ESA) was performed in accordance with Task Order Request (TOR) No.: 14-2FMEHS-00020, and was conducted consistent with the procedures included in ASTM International (ASTM) E1527-13, *Standard Practice for Environmental Site Assessments: Phase I Environmental Site Assessment Process*. The purpose of this ESA was to assist the City of Chicago, Department of Fleet and Facility Management (client) in developing information to identify potential impacts, their extent, and determine if remediation is necessary prior to the redevelopment of the site for industrial/commercial uses. This purpose was undertaken through user-provided information, a regulatory database review, historical and physical records review, and interviews (when available), including local government inquiries, as applicable, user-provided information, and a visual noninvasive reconnaissance of the site and adjoining properties. Limitations, ASTM deviations, and significant gaps (if identified) are evident from reviewing the applicable scope of services and the report text.

1.2 Site Description

Site Location/Address	650 West 83rd Street, Chicago, Cook County, Illinois
Land Area	Approximately 9-acres
Site Improvements	The site appeared as vacant land
Site Use	Vacant land
PIN Numbers[2]	20-33-119-024, 20-33-124-001, 20-33-124-002
Adjoining North	Vacant structures (601 West 81st Street).
Adjoining South	East-west oriented West 83rd Street followed by (from east to west) Look Up and Live Full Gospel Ministries (661 West 83rd Street) and a municipal park.
Adjoining East	North-south oriented South Wallace Street followed by Diamond Waste and Recycling (8149 South Wallace Street), and a truck trailer storage yard.
Adjoining West	Southwest-northeast oriented railroad berm (Metra commuter rail line).

[2] Permanent Index Numbers (PINs)

The site location is depicted on Exhibit 1, which was reproduced from a portion of the United States Geologic Survey (USGS) 7.5-minute series topographic map (Blue Island, Illinois Quadrangle). A Site Diagram of the site and adjoining properties is included as Exhibit 2.

1.3 Scope of Work

The following scope of work was performed in accordance with TOR14-2FMEHS-00020:

- Tasks undertaken: field reconnaissance, freedom of information act (FOIA) requests (City of Chicago and state departments), regulatory database search, historical data review (topographic maps, aerial photographs, city directories, and Sanborn Maps).
- Tasks NOT undertaken: interviews, a chain-of-title, and lien search were not conducted.

1.4 Limitations and Exceptions

Based upon the agreed-on scope of services, this ESA did not include subsurface or other invasive assessments, business environmental risk evaluations, or other services not particularly identified and discussed herein. Reasonable attempts were made to obtain information within the scope and time constraints set forth by the client; however, in some instances, information requested is not, or was not, received by the issuance date of the report. Consideration of such information is beyond the scope of this assessment. Information obtained for this ESA was received from several sources that we believe to be reliable; nonetheless, the authenticity or reliability of these sources cannot and is not warranted hereunder. This assessment was further limited by the following:

- *A chain-of-title and environmental lien search was not performed in accordance with the TOR.*
- *Terracon requested information from several agencies regarding potential on-site RECs; however, at the issuance of this report a response had not been received from the following agencies:*
  - *City of Chicago Department of Buildings*
  - *City of Chicago Fire Department*
  - *City of Chicago Department of Public Health*
  - *Illinois Environmental Protection Agency (IEPA)*
- *Visual observations of the site were limited during the site reconnaissance due to snow cover throughout the site and a locked enclosure surrounding the site. Observations of the site and surrounding properties were made from the exterior of the locked enclosure.*

An evaluation of the significance of these limitations and missing information with respect to our findings has been conducted, and where appropriate, significant data gaps are identified and discussed in the text of the report; however, it should be recognized that an evaluation of significant data gaps is based on the information available at the time of report issuance, and an evaluation of information received after the report issuance date may result in an alteration of our conclusions, recommendations, or opinions. We have no obligation to provide information obtained or discovered by us after the issuance date of the report, or to perform any additional services, regardless of whether the information would affect any conclusions, recommendations, or opinions in the report. This disclaimer specifically applies to any information that has not been provided by the client.

This report represents our service to you as of the report date. Findings in this report are based upon the site's current utilization, information derived from the most recent reconnaissance and from other activities described herein; such information is subject to change. Certain indicators of the presence of hazardous substances or petroleum products may have been latent, inaccessible, unobservable, or not present during the most recent reconnaissance and may subsequently become observable (such as after site renovation or development). Further, these services are not to be construed as legal interpretation or advice.

1.5 Standard of Care

This ESA was performed in accordance with generally accepted practices of this profession, undertaken in similar studies at the same time and in the same geographical area. We have endeavored to meet this standard of care, but may be limited by conditions encountered during performance, a client-driven scope of work, or inability to review information not received by the report date. Where appropriate, these limitations are discussed in the text of the report, and an evaluation of their significance with respect to our findings has been conducted.

Phase I ESAs, such as the one performed at this site, are of limited scope, are noninvasive and cannot eliminate the potential that hazardous, toxic, or petroleum substances are present or have been released at the site beyond what is identified by the limited scope of this ESA. In conducting the limited scope of services described herein, certain sources of information and public records were not reviewed. It should be recognized that environmental concerns may be documented in public records that were not reviewed. No ESA can wholly eliminate uncertainty regarding the potential for RECs in connection with a property. Performance of this practice is intended to reduce, but not eliminate, uncertainty regarding the potential for RECs. No warranties, express or implied, are intended or made. The limitations herein must be considered when the user of this report formulates opinions as to risks associated with the site or otherwise uses the report for any other purpose. These risks may be further evaluated – but not eliminated – through additional research or

assessment. We will, upon request, advise you of additional research or assessment options that may be available and associated costs.

1.6 Reliance

This ESA report is prepared for the exclusive use and reliance of the City of Chicago. Use or reliance by any other party is prohibited without the written authorization of City of Chicago Terracon.

Continued viability of this report is subject to ASTM E1527-13 Sections 4.6 and 4.8. If the ESA will be used by a different user (third party) than the user for whom the ESA was originally prepared, the third party must also satisfy the user's responsibilities in Section 6 of ASTM E1527-13.

1.7 Client Provided Information

In accordance with All Appropriate Inquiry (AAI), Terracon requested client information from the City of Chicago.

Prior to the site visit, Ms. Sarah Rubin, client's representative, was asked to provide the following user questionnaire information as described in ASTM E 1527-13 Section 6.

Client Questionnaire Responses

Client Questionnaire Item	Client Did Not Respond	Client's Response	
		Yes	No
Aware of any Environmental Cleanup Liens against the site.			X
Actual Knowledge of Environmental Liens or Activity Use Limitations (AULs) that may encumber the site.			X
Aware of any Specialized Knowledge or Experience related to the site or nearby properties.			X
Actual Knowledge of a Significantly Lower Purchase Price because of hazardous substances or petroleum products.		X	
Commonly Known or Reasonably Ascertainable Information that is material to a release in connection with the site.		X	
Obvious Indicators of Contamination at the site.		X	

Ms. Rubin indicated that remediation will be needed at the site and prior Phase I and Phase II reports have been prepared for the site. A copy of the completed user questionnaire is included in Appendix E.

2.0 PROPERTY OVERVIEW

2.1 Property Location and Land Use

2.1.1 Property Location

The site is located within the northwest 1/4 of Section 33, Township 38 North, Range 14 East of the third principal meridian, Cook County, Illinois. PINs 20-33-119-024, 20-33-124-001, 20-33-124-002 were identified for the site by the client.

2.1.2 Adjacent Property Locations and Land Uses

Adjoining North	Vacant structures (601 West 81st Street).
Adjoining South	East-west oriented West 83rd Street followed by Look Up and Live Gospel Ministries (661 West 83rd Street) and Self Storage Inc. (8316 South Birkhoff Avenue).
Adjoining East	North-south oriented South Wallace Street followed Diamond Waste & Recycling (8149 South Wallace Street) and truck parking lot.
Adjoining West	North-south oriented elevated Metra railroad tracks.

2.1.3 Utilities

The site is in a location where water and sewer connections to the municipal system are required. Metropolitan Water Reclamation District of Greater Chicago (MWRD) and the City of Chicago provide sanitary sewer and potable water services to the site vicinity, respectively. Commonwealth Edison (ComEd) provides electrical service to the area and People's Energy provides natural gas service.

2.2 Physical Setting

2.2.1 Topography

Topography*		
Site Elevation	Approximately 600 feet above National Geodetic Vertical Datum (NGVD).	Blue Island, Illinois USGS Topographic Map, Dated 1997.
Surface Runoff/ Topographic Gradient	Regionally topographic gradient generally slopes to the northeast. Local runoff is carried by the municipal storm water system.	

*Please refer to Exhibit 1 for an excerpt of the topographic map.

2.2.2 Geology/Hydrogeology

Geology/Hydrogeology		
Formation:	Dolomites and limestones of the Silurian-Devonian age lying beneath upper-Devonian shales, Mississippian rocks or Quaternary deposits.	USGS Hydraulic Investigations Atlas 730-K, Dated 1995
Hydrogeologic Gradient:	Based on results from the Follow-Up Phase II report, groundwater flows from the northeast to the southwest portion of the site.	*Follow-up Phase II ESA (TOR No. 13-2FMBEM-00005)* prepared by Terracon and dated October 28, 2013.
Soils:	Subsurface consists of approximately 4–8 feet of fill material underlayed by sand and then silty clay to at least 24 feet bgs.	*Follow-up Phase II ESA (TOR No. 13-2FMBEM-00005)* prepared by Terracon and dated October 28, 2013.
Primary Aquifer	Surficial deposits generally less than 100 feet thick. The occurrence of sand and gravel aquifers difficult to locate.	USGS Hydraulic Investigations Atlas 730-K, Dated 1995
Estimated depth to first occurrence of groundwater	Within approximately three to seven feet below grade surface (bgs) on-site.	*Follow-up Phase II ESA (TOR No. 13-2FMBEM-00005)* prepared by Terracon and dated October 28, 2013.

Urban fill material in the City of Chicago typically contains elevated concentrations of polynuclear aromatic hydrocarbons (PNAs) and metals. The presence of urban fill on-site (confirmed in subsurface investigations) constitutes a REC to the site.

2.2.3 Surface Water Bodies

Surface water bodies were not observed on or immediately adjacent to the site.

2.2.4 Wetlands

Terracon reviewed the U.S. Fish and Wildlife Service (FWS) National Wetland Inventory (NWI) maps for the site. The FWS NWI maps did not indicate the presence of potentially regulated wetlands on or adjacent to the site. Additionally, Terracon did not observe obvious indications of the likely presence of regulated wetlands on the site.

2.2.5 Flood Maps

Terracon accessed the Federal Emergency Management Agency (FEMA) Flood Insurance Rate Map (FIRM) website. Based on the FIRM Map Number 17031C0635J, community ED 17031C, the site panel was "not printed."

3.0 PROPERTY BACKGROUND/OPERATING HISTORY

Terracon reviewed the following historical sources to obtain information regarding property background, operating history, and for indications of RECs. Copies of selected historical documents were appended to this report.

3.1 Review of Aerial Photographs

Selected historical aerial photographs, provided by EDR, were reviewed to obtain information concerning the history of development on and near the site. Evaluation of these aerials may be limited by a photo's quality and scale. Underlined descriptions in the following table indicate additional discussion is offered below the table. Selected photographs are summarized below.

Year	Source	Scale
1938	EDR	1"=500'
1952	EDR	1"=500'
1962	EDR	1"=500'
1964	EDR	1"=500'
1972	EDR	1"=750'
1978	EDR	1"=500'
1984	EDR	1"=500'
1988	EDR	1"=750'
1994	EDR	1"=750'
1999	EDR	1"=500'
2005	EDR	1"=500'
2007	EDR	1"=500'
2009	EDR	1"=500'
2010	EDR	1"=500'
2011	EDR	1"=500'
2012	EDR	1"=500'

Historical Aerial Photographs

Direction	Description
Site	Appears mostly vacant with a *small structure on the northwest corner* and an additional larger rectangular structure on the northeast corner (1938, 1952); *nine vertical rows of apparent automobiles* and the former structure on the northwest position of the site no longer present (1962, 1964, 1972, 1978, 1984); structure on the corner of the site is no longer present (1988, 1994, 1999, 2005, 2007, 2009); site is vacant (2010); two piles of potential *dumped debris located on the southeast corner of the site* (2011, 2012).
North	East-west oriented West 82nd Street followed by *four large rectangular buildings* (1938, 1952, 1962, 1964, 1972, 1978, 1984); western most structure no longer depicted ("storage warehouse") (1988, 1994); eastern most structure no longer depicted (unknown usage) (1999, 2005, 2007, 2009, 2010, 2011, 2012).

Direction	Description
East	A north-south oriented road (South Wallace Street) followed by a *rectangular structure* (1938, 1952); an additional rectangular structure (tile cutting warehouse further discussed in Section 3.3) (1962, 1964); an additional rectangular structure to the southeast (1972, 1978, 1984, 1988, 1994, 1999, 2005, 2007, 2009, 2010, 2011, 2012).
South	East-west oriented West 83rd Street followed by two rectangular structures (661 West 83rd Street, and 8316 South Birkhoff Street) and a vacant grassed area (1938, 1952, 1962); apparent automobiles in the former vacant grassed area north of South Birkhoff Street (1964); the apparent existing park area north of South Birkhoff Street (1972, 1978, 1984, 1988, 1994, 1999, 2005, 2007, 2009, 2010, 2011, 2012); graded land at 661 West 83rd Street (1988, 1994, 1999, 2005, 2007, 2009, 2010, 2011, 2012).
West	Southwest-northeast oriented railroad tracks followed by apparent residential structures similar to the existing structures (1938, 1952, 1962, 1964, 1972, 1978, 1984, 1988, 1994, 1999, 2005, 2007, 2009, 2010, 2011, 2012).

The small structure on the northwest corner of the site correlates to the paint storage structure identified on the 1910 through 1975 Sanborn maps, and the nine vertical rows of apparent automobiles correlate to the Chicago Auto Pound identified on the 1987 through 2004 Sanborn maps.

3.2 Review of Topographic Maps

Selected USGS topographic maps were viewed from those provided by EDR and an online source, www.historicaerials.com, to evaluate past uses and relevant characteristics of the site and surrounding properties. The following topographic maps were reviewed. A copy of the most current available USGS topographic map is included as Exhibit 1, with the remainder provided in Appendix B.

- Blue Island, Illinois Quadrangle, scaled 1:62,500 (**1929**)
- Blue Island, Illinois Quadrangle, scaled 1:24,000 (1963, photorevised **1973**)
- Blue Island, Illinois Quadrangle, scaled 1:24,000 (**1993**)
- Blue Island, Illinois Quadrangle, scaled 1:24,000 (**1997**)

Historical Topographic Maps

Direction	Description
Site	Several large rectangular structures (in the place of stockpiles further discussed in Section 3.3 – Review of Sanborn Maps) in addition to a rail spur along the south and west property boundaries (1929); vacant with the exception of a rectangular structure on the northeast corner (1973, 1993, 1997).

Direction	Description
North	Several large rectangular structures (in the place of lumber storage structures further discussed in Section 3.3 – Review of Sanborn Maps) in addition to a rail spur along the north property boundary (1929, 1973); west-most rectangular structure no longer depicted (1993, 1997).
East	A north-south oriented road followed by vacant land on the north and a large structure on the south (further discussed in Section 3.3 – Review of Sanborn Maps) (1929); north-south oriented road followed by multiple rectangular structures (further discussed in Section 3.3 – Review of Sanborn Maps) (1973, 1993, 1997).
South	An east-west oriented road followed by several large rectangular structures (1929); area south of road is vacant or shaded pink to indicate densely developed area (1973, 1993, 1997).
West	Southwest-northeast oriented railroad tracks followed by several small rectangular structures indicating single-family residential development (1929); pink shaded area west of railroad tracks indicating dense urban development (1973, 1993, 1997).

**Based on the color-coding of the topographic maps (shading), the site and surrounding areas appear to be included in a densely developed area. Structures are not depicted on these maps in the area of the subject site or surrounding properties; however, this does not necessarily indicate that these areas were undeveloped as of the date on the maps. Street development, however, is depicted on these maps.*

3.3 Review of Sanborn Maps

Historical fire insurance maps produced by the Sanborn Map Company were requested from EDR to evaluate past uses and relevant characteristics of the site and surrounding properties. Underlined listings indicate that additional discussion is provided following the table. EDR provided Sanborn maps as summarized below.

- EDR – 1897, 1910, 1924, 1951, 1975, 1987, 1989, 1992, 2002, 2004.

Historical Sanborn Fire Insurance Maps

Direction	*Description*
Site	Vacant parcels bisected by an east-west traversing West 82nd Place and a small structure on the far southwest corner labeled "Station" with two additional illegible words (1897); International Harvester development consisting of eleven areas of stock storage (on the southwest and northeast portions of the site), ten areas of lumber storage (primarily on the southeast and northwest portions of the site), two structures labeled "dry kilns" on the northeast portion, and four areas of spoke and hub storage (throughout the site), a 100,000-gallon gravity-fed water tower (still present). *Structure labeled "paint storage" on the northwest corner of the site in addition to three 12,000-gallon benzene and linseed oil USTs* as well as a rail spur crossing the site to the north adjoining property (1910, 1924); stock piles and benzene tanks no longer labeled, site identified as International Harvester Co. Weber Works (paint storage, rail spur and water tower still depicted), structure on the northeast corner labeled, "Masonite Tile Warehouse" (1951, 1975); paint storage structure and Masonite Tile Warehouse no longer depicted, site labeled "*Chicago Auto Pound*" (1987, 1989, 1992, 2002); rail spur no longer depicted (2004).
North	East-west oriented West 82nd Street followed by vacant land and a structure labeled "Storage" followed by a lumber storage yard (1897); a rail spur followed by mill construction, lumber storage and a "forge shop" along with a circular object labeled "paint kettle" (1910, 1924); lumber storage structure no longer depicted (1951, 1975, 1987); mill construction structure no longer depicted (1989, 1992, 2002, 2004).
East	North-south oriented South Wallace Street followed by vacant land and single-family residential structures (1897, 1910); a 600,000-gallon "reservoir" of unknown material, with piping leading to fire pumps to the north, a "rim bending shop" and a wagon stock yard (1924); rim bending shop structure remains; however, unlabeled (1951); *A & Lub Oil Warehouse with four apparent oil tanks of unknown volume*, a "Masonite Tile Factory structure" (1975); structure now unlabeled (1987, 1992); *junk yard depicted north of A & Lub bulk oil station* (2002, 2004).
South	East-west oriented West 83rd Street followed by an area not mapped (1897); International Harvester wagon stock sheds and vacant land south of West 83rd Street (1910); expanded wagon storage sheds (1924); John's Bake Shop (671-653 West 83rd Street), Ideal School Supply Co. (8316-8340 South Birkhoff Avenue) and vacant land (1951); Dalton Gorman Industries, Manufactured Molded Marble Products (671-653 West 83rd Street), Lighting Fixture warehouse, and Otten Bobby Pin Manufacturing (8316-8340 South Birkhoff Avenue) and vacant land (1975); vacant land at 671-673 West 83rd Street (1987, 1989, 1992, 2002, 2004).
West	Southwest-northeast oriented railroad tracks (elevated on dirt fill, labeled "GRI&P Railroad") followed by apparent residential garage and residential structures (1897, 1910, 1924, 1951, 1975, 1987, 1989, 1992, 2002, 2004).

The site consisted of vacant land bisected by West 82nd Place and a small unidentified "station" structure on the southwest corner in 1897. From at least 1910 through 1924 the site

consisted of lumber storage structures and stock piles associated with International Harvester. A paint storage structure was present on the northwest corner of the site from at least 1910 through 1975 and three 12,000-gallon benzene USTs were located in the same area from at least 1910 through 1924. The site was developed as an automotive impoundment lot from at least 1987 through 2002 and has apparently been vacant since 2004.

On-site RECs identified during the Historical Sanborn Map review include the following:

- Potential for wood preservative (such as coal tar/creosote) application and storage to have caused releases in association with lumber stockpiles and rail spurs on site;
- Potential lead-based paint releases from paint storage structure as storage took place on site for at least sixty-five years;
- The potential for releases of petroleum products from impounded automobiles stored on site from at least 1987 through 2002.

The presence of, and potential for releases from three 12,000 benzene USTs on-site from at least 1910 through 1924 was listed as a historical REC based on follow-up subsurface investigation.

Additional off-site facilities were identified in the review of Sanborn Maps, and are further discussed in Section 4.1 – Regulatory Database Search and Significant Findings. Industrial and fuel storage/dispensing facilities of various types have been located to the north, east and south of the site in various forms from at least 1910 through the present.

3.4 Review of City Directories

The Haines, R.L. Polk & Co. and R.H. Donnelley directories used in this study were made available through Historic Information Gatherers, Inc. (selected years reviewed: 1929, 1954, 1958, 1963, 1969, 1974, 1979, 1984, 1989, 1994, 1999, 2004, 2009) and were reviewed at approximate five-year intervals, if readily available. Since these references are copyright protected, reproductions are not provided in this report. The current street address for the site was identified as 650 West 83rd Street, Chicago. Underlined and italicized facilities are further discussed below this table and/or in Section 4.1 – Federal and State / Tribal Databases or below the following table.

Historical City Directories

Direction	Description
Site	**650 West 83rd Street:** Not listed (1929, 1954, 1958, 1963); *Chgo Auto Pounds* (1969, 1974); *Cty Pol Ato Pnds 2* (1979, 1984); *Chgo Cty Pol Auto 1* (1989); not listed (1994, 1999, 2004, 2009). **8208-8224 South Wallace Street:** Not listed (1929, 1954, 1958, 1963, 1969); Evergreen Pk Sls (1974); not listed (1979, 1984, 1989, 1994, 1999, 2004, 2009).
North	**601 West 81st Street:** Inter Harvester Co Weber Works (storage) (1929); not listed (1954); Gordon Sales Management (1958); Progressive Sheet Metal Incorporated (1963); Advance Adhesive Incorporated (1969); Advance Adhesives, Asbestos Wood Mfg, Dalyn Co, Hamilton Plywood Co, Leinweber FH Co, Paco Co, Spar Warehouse & Distr, Spar Warehouse & Dist, Wrapping Equipment (1974); Advance Adhesives, Asbestos Wood Mfg, Blue Cross Chemical, Cryogool Chgo Inc, Paco Co, Spar Warehouse & Distr (1979); Advance Adhesives, Asbestos Wood Mfg, Spar Warehouse & Distr, Zarov Chem Co. (1984); AWMCO Inc. (1989, 1994, 1999, 2004); Abbitt Adhesives, Inc., AWMCO Inc. (2009). **8149-8159 South Wallace Street:** Not listed (1929); *Bohnett Oil Co.* (1954,1958); Degroot Fred, *Lind Fuel Co, Midwest Fuel Transportation* (1963, 1969); not listed (1974); *Cross City Scavengers* (1979); not listed (1984, 1989, 1994, 1999, 2004); *Diamond Waste & Recycling* (2009).
East	**8201-8259 South Wallace Street:** Not listed (1929); Miratile Mfg (1954, 1958, 1963); Abitibi Corp (1969, 1974, 1979); Marquette Bolt & Rvet Tech Treat Inc. (1984); not listed (1989, 1994, 1999, 2004, 2009).
South	**653-671 West 83rd Street:** John's Bake Shop (1929, 1954); Biehl & Livingston Pakg Company Inc. (1958, 1963); Dalton & Gorman Inds (1969, 1974); not listed (1979); JS Auto Clinic (1984); not listed (1989, 1994, 1999, 2004, 2009). **8316-8340 South Birkhoff:** Ideal School Supply Co. (1929, 1954, 1958, 1963); Lady Lora Co Inc., Otten Mfg Co. (1969); same as prior and Triangle MBL HM and Triangle Home Prods (1974); Lady Lora Co. Inc., Otten Mfg Co. (1979); Natl Porges Radiatr (1984); Malnekoff Entprs, Natl Porges Radiatr (1989); Oxford Metal (1994, 1999); 83rd Halsted Self Storage Inc, U-Haul (2004); 83rd & Hlstd Slf Strg Inc Wst, Aaron Bros Slf Strg Inc, and U-Haul Company (2009).
West	Rail berm followed by single-family residential structures

The property at 8149 through 8159 South Wallace Street is located on the east and northeast adjoining property in a down-gradient position relative to the site. The facility was identified as a fuel storage facility from at least 1954 through 1969 and as a junk yard from 1979 through 2009. The property remains developed with a recycling facility further discussed in Section 4.1 – Federal and State / Tribal Databases.

3.5 Title Search / Environmental Lien Search

Environmental lien and title records for the site were not provided by the client. At the direction of the client, performance of a review of these records was not included as part of the scope of services. Unless notified otherwise, we assume that the client is evaluating this information outside the scope of this report.

3.6 Previous Reports

Previous environmental reports for the site were provided by the client to Terracon for review. A summary of the findings of these reports is provided below. This summary is based solely on the information provided in the referenced documents. Terracon offers no assessment regarding the quality, completeness and/or accuracy of the information provided. This information is being considered solely in the context of additional historical information made available for the site.

- Phase I Environmental Site Assessment
  650 West 83rd Street, Chicago, Cook County, Illinois
  Prepared by: Terracon
  Dated: July 2, 2013

The report assessed the current site, which was described as "a fenced area at the northwest corner of South Wallace Street and West 83rd Street." Terracon identified the following RECs in connection with the site during the 2013 Phase I ESA:

- "Potential for wood preservative (such as coal tar/creosote) application and storage to have caused releases in association with the lumber stockpiles and rail spurs on site;
- Potential lead-based paint releases from former paint storage structure on the northwest corner of the site;
- The potential presence of known USTs on the site based on the historical industrial operations;
- The presence of, and potential for releases, from three 12,000-gallon benzene and linseed oil USTs on-site from at least 1910 through 1924;
- The potential for releases of petroleum products from impounded automobiles stored on-site from at least 1962 through 2009;
- The potential impact to the site from the on-site SPILLS listing;
- Potential for miscellaneous dumped material to be contaminated with petroleum products, or other chemicals and to have impacted the site;
- The potential for impact to the site from the recorded release and storage of petroleum products and hazardous materials at the east adjoining facility (8201 South Wallace Street);

- Industrial operations, and paint and fuel storage facilities of various types have been located to the north, east, and south of the site in various forms from at least 1897 through the present, and their potential impact; and,
- Likely present on-site urban fill material."

Terracon's 2013 Phase I ESA did not provide recommendations in the report.

- Phase II Environmental Site Assessment
  650 West 83rd Street, Chicago, Illinois
  Prepared by: Terracon
  Dated: August 5, 2013

The Phase II ESA was conducted to establish the presence or absence of impacts to the site associated with the RECs identified in Terracon's 2013 Phase I ESA (previously discussed above). Illinois Environmental Protection Agency (IEPA) Site Remediation Program (SRP) requirements for data quality, usability, and validation were met during the Phase II as the site was not [currently] enrolled into the IEPA's SRP "but may be enrolled at a later date." The report states that the site would be potentially redeveloped as an anaerobic digester and other related uses.

Between June 25 and June 28, 2013, Terracon advanced 37 soil borings throughout the site. Thirty-five of the soil borings were advanced to a depth of 16 feet below ground surface (bgs) and two soil borings were advanced to a depth of 24 feet bgs. Subsurface materials consisted of 6 to 8 feet of urban fill material (dark brown to black clay/sand/gravel mixtures with bricks, cinders, wood, and glass) underlain by 6 inches to 5 feet of dark brown sand. Beneath the sand, gray silty clay with trace sand and gravel was encountered to a maximum of 24 feet bgs. Soil samples were continuously collected from each boring and screened using a photoionization detector (PID) from 0 to 3 feet bgs and 3 to 16 feet bgs. A total of 74 soil samples were collected and 70 of the soil samples were submitted for laboratory analysis of PNAs, Target Analyte List (TAL)/Resource Conservation and Recovery Act (RCRA) Metals, Benzene, Toluene, Ethylbenzene, and Xylenes (BTEX), VOCs, SVOCs, Pesticides, Polychlorinated Biphenyls (PCBs), Herbicides, Fraction Organic Carbon (FOC), and pH.

Three soil borings were converted to temporary groundwater monitoring wells (denoted as MW-5, MW-10-and MW-34), one well located in three different sections of the site. Groundwater was observed at 5.19 feet bgs in MW-5; 1.5 feet bgs in MW-10; and 1.91 feet bgs in MW-34. Groundwater samples were collected from each well and submitted for laboratory analysis of VOCs, SVOCs, Pesticides, PCBs, Inorganics, and Herbicides. Terracon returned to the site on July 3, 2013 to conduct a slug test to determine the hydraulic conductivity and determine groundwater classification. Approximately 6 gallons of

water were pumped out of MW-5 and depressed the water level 1.25 feet. Groundwater was observed at the initial elevation within approximately 6 minutes. Hydraulic conductivity was determined to be 2.7 x 10^{-3} cm/second and groundwater was classified as Class I designation. The groundwater flow direction was determined to be towards the northwest.

Analyte concentrations were compared to the Tiered Approach to Corrective Action Objectives (TACO) Tier I SROs and GROs. Based on the planned potential redevelopment of the site, analytical results were compared to the Tier I SROs for the Residential, Industrial/Commercial, and Construction Workers scenarios; Tier I Soil Component of Class I Groundwater Ingestion; and Tier I Class I GROs. The following exceedances were detected during the laboratory analysis:

- VOCs, PNAs, and inorganics were detected above applicable Tier I SROs;
- The sum of PNA concentrations in B-14 exceed the default subsurface attenuation capacity;
- Hazardous concentrations of lead were detected in B-11 and B-16 through Toxicity Characteristic Leaching Procedure (TCLP) analysis; and,
- Lead, manganese, and iron were detected above the Tier I GROs for Class I groundwater in groundwater samples.

Results of borings B-1 through B-3 did not identify VOC release from the area noted with benzene tanks identified as a REC in the 2013 Phase I ESA. Terracon recommended that the site soil and groundwater be properly managed and/or disposed of during any future redevelopment activities. Additional investigation would be required to delineate the extent of impacted soil and groundwater.

- Follow-Up Phase II Environmental Site Assessment
  650 West 83rd Street, Chicago, Illinois
  Prepared by: Terracon
  Dated: October 28, 2013

The follow-up Phase II was conducted to further investigate impacts identified in Terracon's previous 2013 Phase II ESA. Between September 26 and September 27, 2013 Terracon advanced 40 soil borings at the site to depths of 4 to 16 feet bgs. An additional 13 soil borings were advanced at the site on October 23, 2013 to collect additional soil samples from depth and help delineate the south extent of hazardous impacts on the western portion of the site. Soil samples were continuously screened using a calibrated Photoionization detector (PID). Soil samples were collected 20 feet in each cardinal direction from previously impacted borings. Additional samples were collected 40 feet in each cardinal direction from the previously impacted borings and placed on hold pending initial analytical results. A total of 75 soil samples were collected and 52 soil samples were submitted for laboratory analysis of PNAs, TPH, total metals, TCLP metals, pH, BTEX, and elemental mercury.

One new temporary monitoring well (denoted as MW-122) was installed per 2FM approval. Groundwater samples were collected from the previously installed MW-5 and MW-34, as well as MW-122. MW-10 was reportedly destroyed and could not be sampled during this investigation. Groundwater samples collected were submitted for laboratory analysis of VOCs, SVOCs, pesticides, PCBs, TAL inorganics, and pH.

Four soil gas borings were advanced immediately adjacent to B-8, B-14, B-16, and B-35. Soil gas samples were collected from a minimum of 3 feet bgs and above the saturated zone. The soil gas samples were submitted for laboratory analysis of naphthalene and VOCs.

Analyte concentrations were compared to the Tier I SROs and Tier I GROs. Based on the planned potential redevelopment of the site, analytical results were compared to the Tier I SROs for Residential, Industrial/Commercial, and Construction Worker scenarios; Tier I Soil Component of Class I Groundwater Ingestion; and Tier I Class I GROs. The following exceedances were detected during laboratory analysis:

- PNA concentrations were detected in soils exceeding SROs for Residential, Industrial/Commercial and Construction Worker exposure routes exceeding the construction worker ingestion exposure route;
- Detections of arsenic and lead in soils in the southwest portion of the site decreased from the previous investigation, and no longer exceed the exposure route for Construction Workers, the least stringent exposure route;
- The groundwater sample collected from MW-122 contained similar inorganic impacts as MW-5 and MW-34; however, exceedances above the Tier I GROs for indoor vapor intrusion were not identified; and,
- Soil gas samples did not exhibit exceedances of Tier I GROs for indoor vapor intrusion exposure route.

Terracon recommended that the impacted soil and groundwater be properly managed and/or disposed of during redevelopment activities. "Should site remediation be desired, further delineation of areas identified with hazardous waste lead and natural attenuation exceedances is suggested, especially in the western portion of the site, to potentially better define the limits of remediation necessary."

4.0 REGULATORY REVIEW

Regulatory database information was provided by EDR, a contract information services company. Information in this section is subject to the accuracy of the data provided by the information services company and the date at which the information is updated, and the

scope herein did not include confirmation of facilities listed as "unmappable" by regulatory databases.

4.1 Regulatory Database Search and Significant Findings

Listed below are the facility listings identified on federal, state/tribal, and private databases within the ASTM-required search distances from the approximate site boundaries, as appropriate. Database definition, descriptions, and the database search report are included in Appendix D – Regulatory Database Information.

Federal and State/Tribal Databases

Database	Description	Radius (Miles)	Number of Facilities
Federal			
NPL	The National Priorities List (NPL) is the USEPA's database of uncontrolled or abandoned hazardous waste facilities that have been listed for priority remedial actions under the Superfund Program.	1.0	0
CERCLIS/ CERCLIS-NFRAP	The CERCLIS database is a compilation of facilities which the USEPA has investigated or is currently investigating for a release or threatened release of hazardous substances pursuant to the Comprehensive Environmental Response, Compensation and Liability Act (CERCLA) of 1980. NFRAP (No Further Remedial Action Planned) refers to facilities that have been removed and archived from its inventory of sites.	0.5	0
ERNS	The Emergency Response Notification System (ERNS) is a listing compiled by the USEPA on reported releases of petroleum and hazardous substances to the air, soil, and/or water.	Site	0
RCRA Generators	The Resource Conservation and Recovery Act (RCRA) Generators database, maintained by the USEPA, lists facilities that generate hazardous waste as part of their normal business practices. Generators are listed as large, small, or conditionally exempt. Large quantity generators (LQG) produce at least 1000 kg/month of non-acutely hazardous waste or 1 kg/month of acutely hazardous waste. Small quantity generators (SQG) produce 100-1000 kg/month of non-acutely hazardous waste. Conditionally exempt small quantity generators (CESQG) are those that generate less than 100 kg/month of non-acutely hazardous waste.	Site and adjoining properties	0
RCRA CORRACTS	The USEPA maintains a database of RCRA facilities that are undergoing "corrective action". A "corrective action" order is issued when there has been a release of hazardous waste or constituents into the environment from a RCRA facility.	1.0	0
RCRA TSDs	The RCRA TSD Database is a compilation by the USEPA of facilities which reportedly treat, store or dispose of hazardous waste.	0.5	0
US Brownfields	Abandoned or underused industrial and/or commercial properties that are contaminated (or thought to be contaminated) and have an active potential for redevelopment.	0.5	0

Database	Description	Radius (Miles)	Number of Facilities
	State/Tribal		
SSU	The IEPA maintains a database of state equivalent CERCLIS list sites (SSU) that are planned for cleanup using state funds or by potentially responsible parties.	0.5	0
SRP	The IEPA maintains a database that contains sites which have voluntarily enrolled in the Site Remediation Program (SRP). This program provides oversight of the site assessment and site remediation performed by the voluntary parties. The intent of this program is to provide applicants the opportunity to receive review and evaluation services, technical assistance and no further remediation determinations from the IEPA.	0.5	6
LUST	The IEPA maintains a database of sites with documented releases from USTs known as Leaking Underground Storage Tanks (LUST) facilities.	0.5	16
SWDF	The IEPA maintains a database of Solid Waste Disposal Facilities located within Illinois. The database information may include the facility name, class, operation type, area, estimated operational life, and owner.	0.5	0
UST	The Office of the State Fire Marshal (OSFM) has compiled a database of registered USTs which may include information such as the owner, contents, age and location of the USTs.	Site and adjoining properties	0
IC/EC	Institutional controls (ICs) consist of legal or administrative restrictions on land use and/or other activities which limit exposure to contamination. Engineering controls (ECs) include those with engineered barriers (*e.g.*, asphalt or concrete paving).	0.5	3/4
	Proprietary		
EDR Historical Auto Stations	A list of Historical Auto stations has been compiled by EDR through a search of selected national collections of business directories for keywords such as gas station, automotive repair, etc.	0.25	25
EDR Historical Cleaners	A list of Historical Cleaners has been compiled by EDR through a search of selected national collections of business directories for keywords such as dry cleaners, laundry, wash & dry, etc.	0.25	5
EDR Manufactured Gas Plant	A list of Manufactured Gas Plants has been compiled by EDR through a search of selected national collections of business directories for keywords such as gas plant, manufactured gas plant, etc.	1.0	0

The following table summarizes the site-specific information provided by the database and/or gathered by this office for identified facilities within approximately 300 feet of the site. Facilities are listed in order of proximity to the site. Additional discussion for selected facilities may follow the summary table. Facilities identified as Chicago ENV are listed on the Chicago Department of Public Health (CDPH) Environmental Records Lookup Table, which is a summary of publicly accessible records available on the City of Chicago's Data Portal. Facilities only listed under Chicago ENV are summarized in Appendix D.

Listed Facilities

Facility Name and Location	Estimated Distance/Direction/Topographic Gradient[3]	Database Listings
Chicago, City of-Dept of Fleet Mgmt/Old City Pound 650 West 83rd Street	Site	Chicago ENV, BOL, SPILLS
Small Business Admin. 8201 South Wallace Street	East adjacent / up-gradient	LUST
Wilson Fields Auto Repair Shop 744 West 83rd Street	Approximately 250 feet / west / cross to down-gradient	Historical Auto Station
Putnam Bros. 8256-8258 Emerald Avenue	Approximately 300 feet / west / cross to down-gradient	Historical Auto Station

Chicago, City of-Dept of Fleet Mgmt/Old City Pound

The site (addressed as 650 West 83rd Street) was identified as a Chicago ENV, BOL, and SPILLS facility in the regulatory database report. The site was identified as a Chicago ENV facility due to on-site inspections. The listing did not contain additional information. The BOL listing indicated the site was listed under Inventory No. 0316715228; however, the BOL database did not contain additional information. A release of unknown content and extent was reported to the Office of Emergency Response, which assigned SPILLS No. NL860889 to the release. The IEPA received notification of the SPILLS incident on August 14, 1986. Additional information was not available for the listing. Based on the unknown content, extent, and location of the release, SPILLS No. NL860889 constitutes a REC to the site.

Small Business Admin.

Small Business Admin. (addressed as 8201 South Wallace Street) was identified as a LUST facility, located on the east adjacent property across South Wallace Street in a hydrogeologically up-gradient position relative to the site. A "non-petroleum fuel oil" release was reported to the IEMA on November 7, 1991 and assigned LUST No. 913213. A Notice of Release was received by the IEPA on November 18, 1991. Investigation or remediation reports were not identified on the IEPA LUST Incident Tracker. A NFR determination for the incident was issued on January 26, 2010 with no engineering or institutional requirements. Terracon requested LUST records from the IEPA; however, at the issuance of this report, the records have not been received for review. Based on the absence of documented remediation activities and close proximity to the site, LUST No. 913213 constitutes a REC to the site.

Wilson Fields Auto Repair Shop

Wilson Fields Auto Repair Shop (addressed as 744 West 83rd Street) was identified as a Historical Auto Station, located approximately 250 feet west in a hydrogeologically cross to down-gradient position relative to the site. According to the regulatory database report, the

[3] Based on data from the Cook County online GIS system, and visual and historical data review.

facility operated as automobile repairing in 1928. Additional listings for the facility were not identified. Based on the regulatory status, the listing does not constitute a REC.

Putnam Bros.

Putnam Bros. (addressed as 8256-8258 Emerald Avenue) was identified as a Historical Auto Station, located approximately 300 feet west in a hydrogeologically cross- to down-gradient position relative to the site. According to the regulatory database report, the facility operated as automobile repairing in 1923. Additional listings for the facility were not identified. Based on the regulatory status, the listing does not constitute a REC.

Remaining Facilities

Remaining listed facilities do not constitute RECs at this time based upon a minimum distance of approximately 300 feet from the site, facility information, regulatory status, or topographic gradient relative to the site.

Unmapped facilities are those that do not contain sufficient address or location information to evaluate the facility listing locations relative to the facility. The EDR report listed two facilities in the unmapped section. These facilities are listed in the EDR report in Appendix D – Regulatory Database Information. Determining the location of unmapped facilities is beyond the scope of this assessment; however, none of the listed unmapped facilities were noted as the site or adjoining properties to the site.

4.2 Freedom of Information Act (FOIA) Requests and Significant Findings

4.2.1 City of Chicago

The City of Chicago Environmental Records online records were reviewed during this assessment.

- Compliant records were identified for the following addresses: 712 and 740 West 83rd Street.
- Demolition notices were identified for 717 West 83rd Street.
- Environmental inspection records were identified for *650 West 83rd Street (the site)*, 639 West 83rd Street, 717 West 83rd Street, 740 West 83rd Street; 8211 South Wallace Street, 8219 South Wallace Street, and 8300 South Wallace Street.
    - The environmental inspection record for the site indicated a representative from the CDPH observed approximately 500 waste tires, 100 cubic yards of landscape waste, and approximately 1,000 cubic yards of mixed tire, plastic, and general litter on-site. The inspection was conducted on November 28, 2012.
- UST permits were identified for 653 West 83rd Street and 8201 South Wallace Street.
    - The UST records for 653 West 83rd Street indicated the facility contained three USTs: a 6,000-gallon UST installed in 1969 and a

500-gallon UST installed in 1954. The USTs were removed on December 13, 1985. Additional information was not available.

- The UST records for 8201 South Wallace Street indicated the facility contained a 6,000-gallon toluene UST and a 6,000-gallon methyl ethyl ketone UST installed in 1962; a 4,000-gallon UST with unreported installation date; a 1,000-gallon fuel oil UST installed in 1953; and five 12,000-gallon fuel oil USTs installed in 1952. Dates of removal were not reported. The USTs were not registered with the OSFM and were not identified in the regulatory database report. Based on the unknown status (i.e. removed, still in use, abandoned in place, etc.),close proximity and apparent hydrogeologic up-gradient position to the site, the USTs constitute a REC to the site.

Additionally, records were requested from the City of Chicago Fire Department regarding potential USTs, above ground storage tanks (ASTs), spills, or other environmental concerns for the site. At the issuance of this report, a response has not been received from the City of Chicago Fire Department.

4.2.2 IEPA

Records were requested from the IEPA regarding potential RECs concerning the site. At the issuance of this report a response from the IEPA had not been received. Terracon queried the IEPA LUST Incident Tracker and SRP databases for site listings. The site was not identified as a LUST or SRP facility.

4.2.3 Office of the State Fire Marshal

The OSFM was contacted via web request regarding information for the site. Mr. Alix Armstead, FOIA Officer at the OSFM, indicated records for the site were not on file. Additionally, Mr. Armstead indicated records for 8201 South Wallace Street were not on file. Terracon queried the OSFM online UST database for site listings. The site was not identified as a UST facility on the OSFM UST database.

4.3 Interviews

Terracon spoke with Mr. Eamon Reilley, an employee with the City of Chicago, Department of Fleet and Facility Management. Mr. Reilley indicated that the Chicago Department of Streets and Sanitation maintain a trailer and have been using the site to temporarily store landscape debris before chipping and hauling off site. Significant piles of landscaping debris were present in the summer of 2014 but have since been removed. Prior to this, the site was used as a City car impound lot.

5.0 PROPERTY INSPECTION

5.1 Property Reconnaissance

Information contained in this section is based on a visual reconnaissance conducted while walking around the exterior of the site on January 19, 2015. The site was observed to be a vacant lot surrounded by a locked enclosure and gate. Dense vegetation was observed along the east, north, and west enclosure boundaries. Snow cover was present throughout the site. Exhibit 2 is a diagram of the site and adjoining properties. A PIN Map is included as Exhibit 3. Photo documentation of the site at the time of the visual reconnaissance is provided in Appendix F – Photographs.

5.1.1 Hazardous/Petroleum Products

Indications of hazardous materials and/or petroleum products were not observed on-site during the site reconnaissance.

5.1.2 Tanks/Vents/Fill Pipes

Indications of UST systems, vent/pill pipes, or similar features were not observed on-site during the site reconnaissance.

5.1.3 Building Foundations

Terracon did not observe remnants of the former building walls and foundations during the reconnaissance.

5.1.4 Odors/Staining, etc.

Obvious visual evidence of staining or odors was not observed on the surface of the site during the reconnaissance.

5.1.5 Drums/Other Containers

Drums and/or other containers were not observed on-site, except for multiple solid waste and recycling dumpsters located in the northeast portion of the site on the exterior of the enclosure.

5.1.6 Debris

Piles of "fly dumped" material were observed throughout the southeast corner and northwest corner of the site. Apparent construction debris including concrete cylinders were observed on the east side of the site.

5.1.7 Asbestos-Containing Material

An asbestos-containing material inspection was outside the scope of this Phase I ESA. No structures are currently located on site, however there is a potential that ACM from former structures may be buried on site.

5.1.8 Transformers

Pad or pole-mounted transformers were not observed on-site.

5.1.9 Stressed Vegetation

Evidence of stressed vegetation was not observed on-site; however, Terracon noted that during the site reconnaissance, potions of the site were covered with approximately 1 to 2 inches of snow and ice.

5.1.10 Other Notable Features

A fenced area was observed in the center of the site; however, its purpose is unknown. An approximately 100,000-gallon iron water tower was observed on the north side of the site.

5.2 Adjacent Properties Reconnaissance

Observations described in the following subsections were made from public vantage points surrounding the site.

5.2.1 Hazardous/Petroleum Products

Indications of hazardous or petroleum products on adjoining properties were not observed; however, the adjoining properties are discussed in Section 4.1 – Federal and State / Tribal Databases.

5.2.2 Tanks/Vents/Fill Pipes

Indications of UST system, vent/fill pipes or associated features were not observed on adjoining properties.

5.2.3 Building Foundations

Indications of building foundations were not observed on adjoining properties.

5.2.4 Odors/Staining, etc.

Evidence of staining was not observed on the surface of the adjoining properties during the reconnaissance. Unusual odors were not noted during the site reconnaissance.

5.2.5 Drums/Other Containers

A 5-gallon container of flashing cement was observed on the north adjoining property. The container was empty and evidence of staining or releases were not observed within the vicinity. Additionally, an empty 55-gallon plastic container was observed in the vegetated area on the north adjoining property. The contents of the container are unknown. Evidence of staining or releases within the vicinity were not observed.

5.2.6 Debris

A large pile of concrete debris was observed on the north adjoining property.

5.2.7 Transformers

Indications of leaks from transformers were not observed on the adjacent properties during the field reconnaissance.

5.2.8 Stressed Vegetation

Stressed vegetation was not observed on adjacent properties during the field reconnaissance.

5.2.9 Other Notable Features

Other notable features were not observed during the adjoining property reconnaissance.

5.3 Building Inspection

The site was not developed with buildings at the time of the Terracon site reconnaissance; hence, interior inspections were not conducted.

6.0 CONCLUSIONS AND RECOMMENDATIONS

This Phase I ESA was performed in accordance with TOR No. 14-2FMEHS-00020 and was conducted consistent with the procedures included in ASTM International (ASTM) E1527-13, *Standard Practice for Environmental Site Assessments: Phase I Environmental Site Assessment Process.* This Phase I ESA was conducted under the supervision or responsible charge of Rachelle Christian, P.G. and Richard M. O'Brien, P.E., Environmental Professionals. Ms. Lauren F. Trzaskus and Mr. Zachary F. Joiner performed the site reconnaissance on January 19, 2015.

A cursory summary of findings is provided below. It should be recognized that details were not included or fully developed in this section, and the report must be read in its entirety for a comprehensive understanding of the items contained herein.

- The site consists of an approximate 9-acre parcel of vacant land located at the northwest corner of South Wallace Street and West 83rd Street in Chicago, Cook County, Illinois (Cook County PINs: 20-33-119-024, 20-33-124-001, and 20-33-124-002).

- The site consisted of undeveloped land in 1897 and unspecified "stock storage" and lumber storage associated with the International Harvester Company from approximately 1910 through 1924. Three 12,000-gallon USTs containing benzene and linseed oil were identified adjacent to a paint storage structure on the northwest corner of the site. USTs were identified in the 1910 and 1924 Sanborn maps and the paint storage structure was identified through 1975. The site was developed with an impounded automotive storage yard from at least 1962 through 2009. The northeast corner of the site was developed with a warehouse structure from 1910 through at least 1964.

- On-site RECs identified during the historical document review include the following:

    - Potential for wood preservative (such as coal tar/creosote) application and storage to have caused releases in association with lumber stockpiles and rail spurs on site;

    - Potential lead-based paint releases from paint storage structure as storage took place on site for at least sixty-five years;

    - The potential presence of unknown USTs on the site based on historical industrial operations; and,

    - The potential for releases of petroleum products from impounded automobiles stored on site from at least 1962 through 2009.

- The potential for releases from three 12,000 gallon benzene USTs on site was negated by subsurface investigations carried out by Terracon personnel. The samples collected from borings B-1 through B-3, the borings related to the tanks, did not return elevated levels of VOCs following laboratory analysis. The historical benzene USTs constitute a historical REC to the site.

- Currently, the site is bordered to the north by vacant structures located at 601 West 81st Street; to the east by South Wallace Street followed by 8149 South Wallace Street (Diamond Waste & Recycling) and truck trailer parking; to the south by South West 83rd Street, a community park, Self Storage, Inc. 8316 South Birkhoff Avenue), and Look Up and Live Full Gospel Ministries (661 West 83rd Street); and, to the west by a Metra elevated rail line. Industrial and fuel storage facilities of various types have been located to the north, east and south of the site in various forms from at least 1897 through the present, and their potential impact to the site represents a REC to the site. Regulatory records are further discussed below.

- Visual observations of the site were limited due to the presence of snow cover throughout the site and a locked enclosure surrounding the site during the site reconnaissance. Fly dumping, including dirt and concrete cylinders, were observed in the southeast and northwest portions of the site. Numerous solid waste and recycling dumpsters were observed in the northeast portion of the site, on the exterior of the locked enclosure.

- A 2013 Phase I ESA conducted by Terracon identified potential releases (associated with former on-site lumber stockpiles, paint storage, impounded automobiles, SPILLS listing, and miscellaneous dumped materials), the presence and potential releases associated with three 12,000-gallon benzene and linseed oil USTs, potential presence of unknown USTs, and the potential for impacts from north, east, and south adjoining properties as RECs to the site.

- Terracon conducted Phase II ESA work in June 2013, including advancement of 36 soil borings, three of which were converted to groundwater monitoring wells. Follow-up work was conducted in September and October of 2013, with advancement of 38 additional borings, with one converted to a groundwater monitoring well and four used for soil gas sampling. The combined Phase II ESA report dated October 28, 2013 identified hazardous concentrations of lead in soil in three locations, and PNAs exceeding the default attenuation capacity of soil in the northwestern portion of the site. Additionally, VOCs, PNAs, and inorganics were detected above Tier I SROs. Groundwater samples collected detected lead, manganese, and iron above Tier I GROs for Class I Groundwater. Soil gas samples detected naphthalene above Soil Gas Remediation Objectives for naphthalene for residential properties.

- The site (addressed as 650 West 83rd Street) was identified as a Chicago ENV, BOL, and SPILLS facility in the regulatory database report. The site was identified as a Chicago ENV facility due to on-site inspections. The listing did not contain additional information. The BOL listing indicated the site was listed under Inventory No. 0316715228; however, the BOL database did not contain additional information. A release of unknown content and extent was reported to the Office of Emergency Response, which assigned SPILLS No. NL860889 to the release. The IEPA received notification of the SPILLS incident on August 14, 1986. Additional information was not available for the listing. Based on the unknown content, extent, and location of the release, SPILLS No. NL860889 constitutes a REC to the site.

- The following former facilities were identified in the environmental database report as being located within a 300 foot vicinity of the site:

- Small Business Admin. (addressed as 8201 South Wallace Street) was identified as a LUST facility, located on the east adjacent property across South Wallace Street. A "non-petroleum fuel oil" release was reported to the IEMA on November 7, 1991 and assigned LUST No. 913213. Investigation or remediation reports were not identified on the IEPA LUST Incident Tracker. A NFR determination for the incident was issued on January 26, 2010 with no engineering or institutional requirements. Based on the absence of documented remediation activities and close proximity to the site, LUST No. 913213 constitutes a REC to the site.

- 8201 South Wallace Street was not identified as a UST facility in the regulatory database report or on the OSFM online UST database; however, UST records identified on the City of Chicago's Data Portal indicated the facility contained a 6,000-gallon toluene UST and a 6,000-gallon methyl ethyl ketone UST installed in 1962; a 4,000-gallon UST with unreported installation date; a 1,000-gallon fuel oil UST installed in 1953; and five 12,000-gallon fuel oil USTs installed in 1952. Dates of removal were not reported. The USTs were not registered with the OSFM. Based on the unknown status (i.e. removed, still in use, abandoned in place, etc.) and close proximity to the site, the USTs constitute a REC to the site.

- Terracon reviewed U.S. FWS NWI Maps for visual indicators to assess the likely presence or absence of regulated wetlands on the site. The NWI maps did not indicate the presence of regulated wetlands on the site. Obvious indications of on-site wetland areas were not observed during the site reconnaissance.

- Urban fill in the City of Chicago typically contains elevated concentrations of PNAs and metals. Based on the historical development of the site and subsurface investigation findings, urban fill is present on-site and constitutes a REC.

CONCLUSION

Terracon has performed this Phase I ESA in conformance with the scope and limitations of ASTM Practice E1527-13 of 650 West 83rd Street, Chicago, Illinois, the site. Any exceptions to, or deletions from, this practice are described in Section 1.4 – Limitations and Exceptions of this report.

This assessment revealed evidence of the following on-site RECs:

- Identified areas with hazardous lead, attenuation, VOC, and inorganic impacts to the site's soil, groundwater, and/or soil gas;
- Potential for wood preservative (such as coal tar/creosote) application and storage to have caused releases in association with lumber stockpiles and rail spurs on site;
- Potential lead-based paint releases from paint storage structure as storage took place on site for at least sixty-five years;
- The potential presence of unknown USTs on the site based on historical industrial operations;
- The potential for releases of petroleum products from impounded automobiles stored on site from at least 1962 through 2009;
- SPILLS No. NL860889 based on the unknown content, extent, and location of the release;
- Impacted urban fill was verified to be on-site during 2013 subsurface investigations.

This assessment revealed evidence of the following on-site HREC:

- The historical benzene USTs were based on subsurface investigations carried out by Terracon personnel. The samples collected from borings B-1 through B-3, the borings related to the tanks, did not return elevated levels of VOCs following laboratory analysis.

This assessment revealed evidence of the following off-site RECs:

- LUST No. 913213 (associated with east adjacent 8201 South Wallace Street) based on the absence of documented remediation activities and close proximity to the site;
- The USTs reportedly registered to 8201 South Wallace Street based on unknown status and close proximity to the site.

Terracon recommends that the site be enrolled into the IEPA's voluntary cleanup program, the Site Remediation Program (SRP), to facilitate completion of site investigation and remediation. Terracon recommends that the site soil and groundwater be properly managed and/or disposed of during any future redevelopment activities.

TABLE 1
SUMMARY OF EXISTING AND HISTORICAL RECs
PHASE I ENVIRONMENTAL SITE ASSESSMENT
650 West 83rd Street
Chicago, Cook County, Illinois
PINs: 20-33-119-024, 20-33-124-001, 20-33-124-002

TERRACON PROJECT NO.: A2157000

On-Site RECs

PIN #	Address	Square Footage	Current/Historical Land Uses	RECs	COCs*	Pathways
20-33-119-024 20-33-124-001 20-33-124-002	650 West 83rd Street	372,000	Historic: International Harvester Company lumber storage; paint storage; automotive impound lot Current: vacant land with dumped materials and water tower	Historical lumber storage, paint storage, potential for orphaned USTs, on-site SPILLs incident, automotive impound lot, on-site urban fill, confirmed exceedances	Creosote, lead, VOCs, PNAs, inorganics, manganese, iron, arsenic	Soil, Groundwater, Soil Gas

*Constituents of concern

Off-Site RECs

PIN #	Address	Square Footage	RECs	COCs*	Pathways
20-33-121-030, -031, 20-33-125-001, -002	8149 South Wallace Street	37,476	LUST Incident with NFR and no remediation activity reports; unknown status of USTs	VOCs, metals	Soil, Groundwater, Soil Gas

Appendices

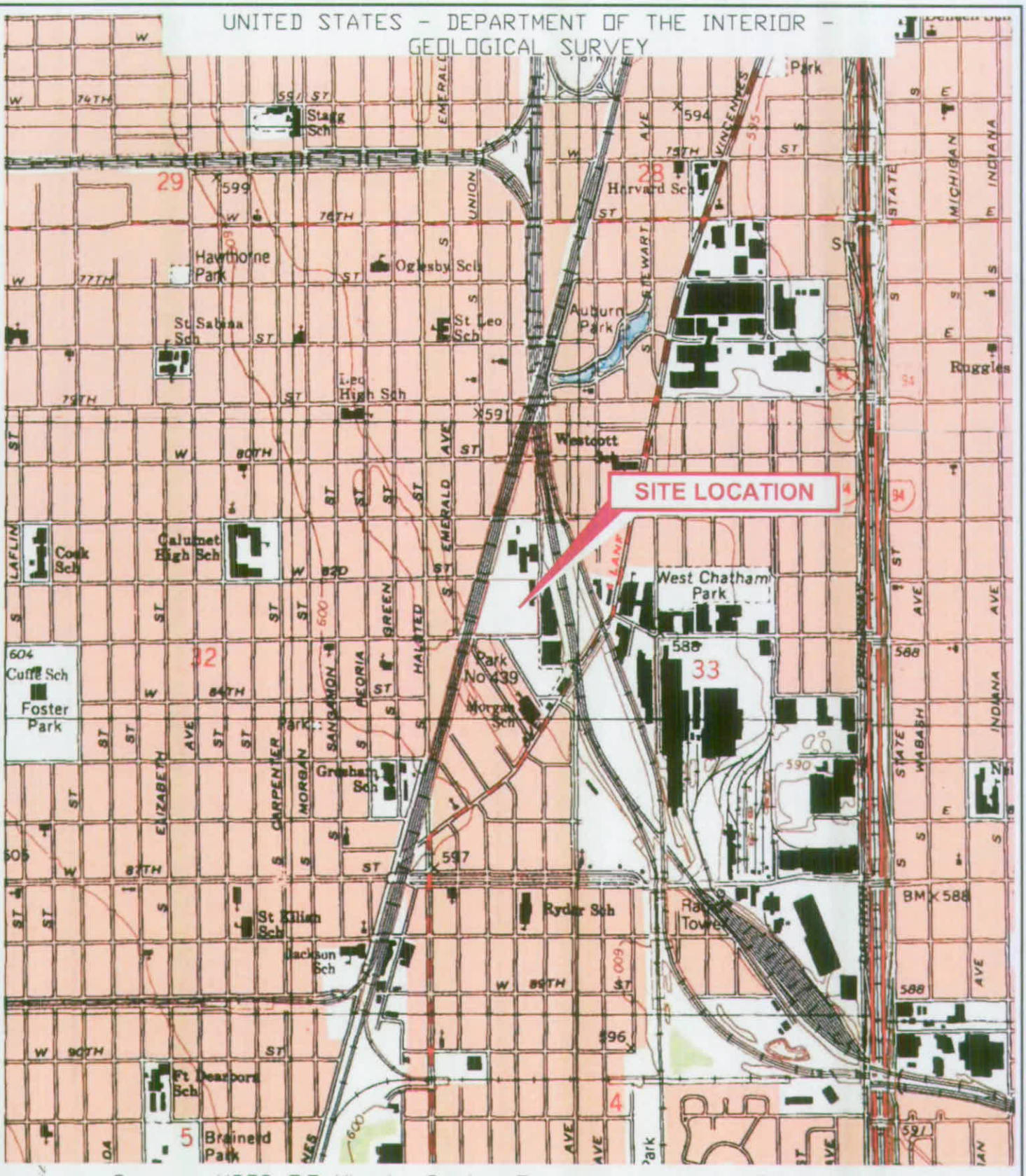

Project Mngr: RMO	Project No: A2157000	Terracon Consulting Engineers and Scientists	TOPOGRAPHIC VICINITY MAP
Drawn By: SDM	Scale: AS-SHOWN		PHASE I ENVIRONMENTAL SITE ASSESSMENT 650 WEST 83RD STREET CHICAGO, ILLINOIS
Checked By: RMO	Revised By: -		EXHIBIT 1
Approved By: RMO	Date: January 23 , 2015		

N:\Projects\2015\A2157000\Working Files\Diagrams-Drawings-Figures\Exhibit 1 - TOPO.dwg

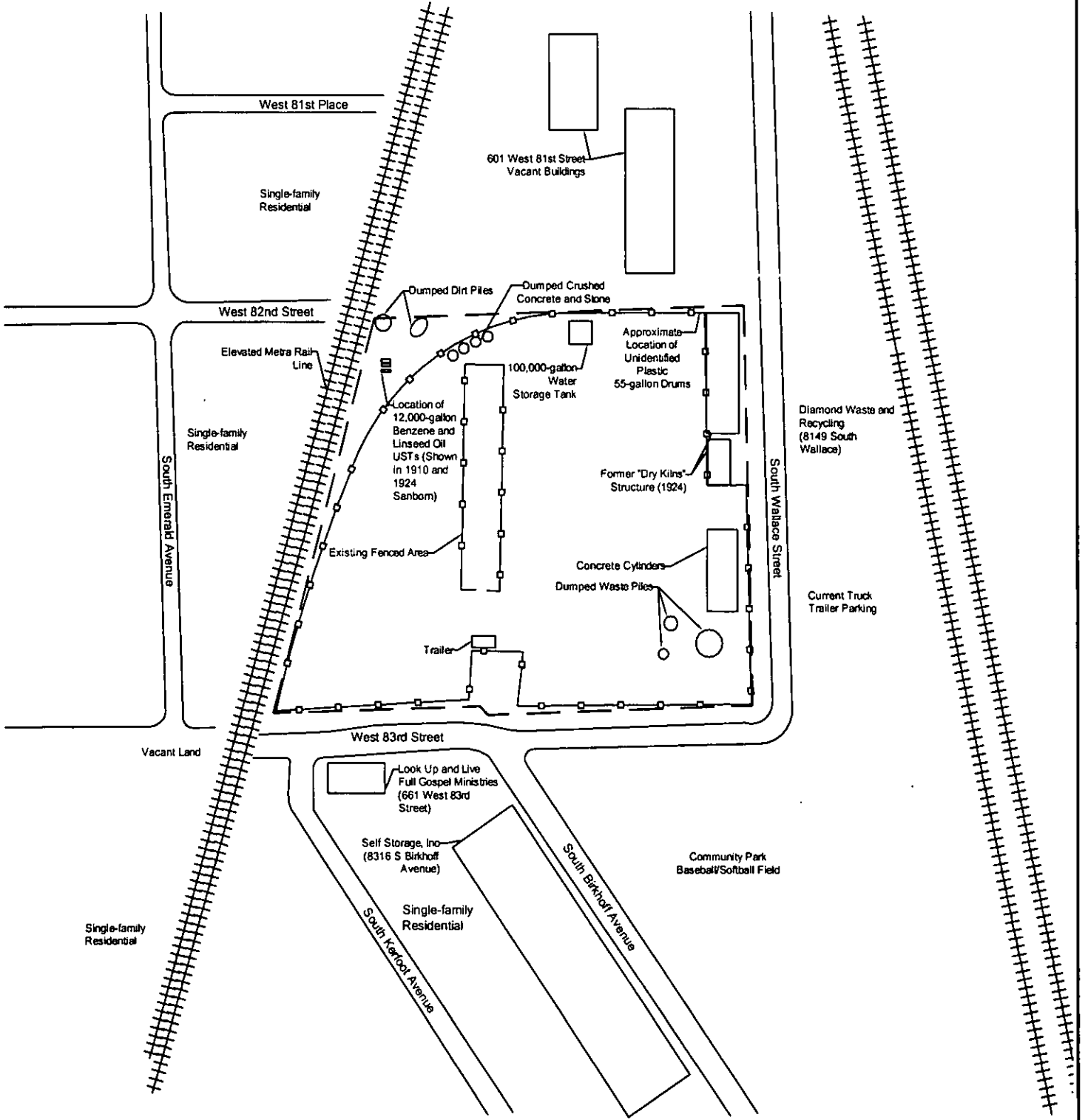

Project Mngr.	RMO
Drawn By	SDM
Checked By	RMO
Approved By	RMO
Project No	A2157000
Scale	AS-SHOWN
Revised By	-
Date	January 23 , 2015

Terracon
Consulting Engineers and Scientists

SITE FEATURE MAP

PHASE I ENVIRONMENTAL SITE ASSESSMENT
650 WEST 83RD STREET
CHICAGO, ILLINOIS

EXHIBIT
2

N:\Projects\2015\A2157000\Working Files\Diagrams-Drawings-Figures\Phase I drawings.dwg

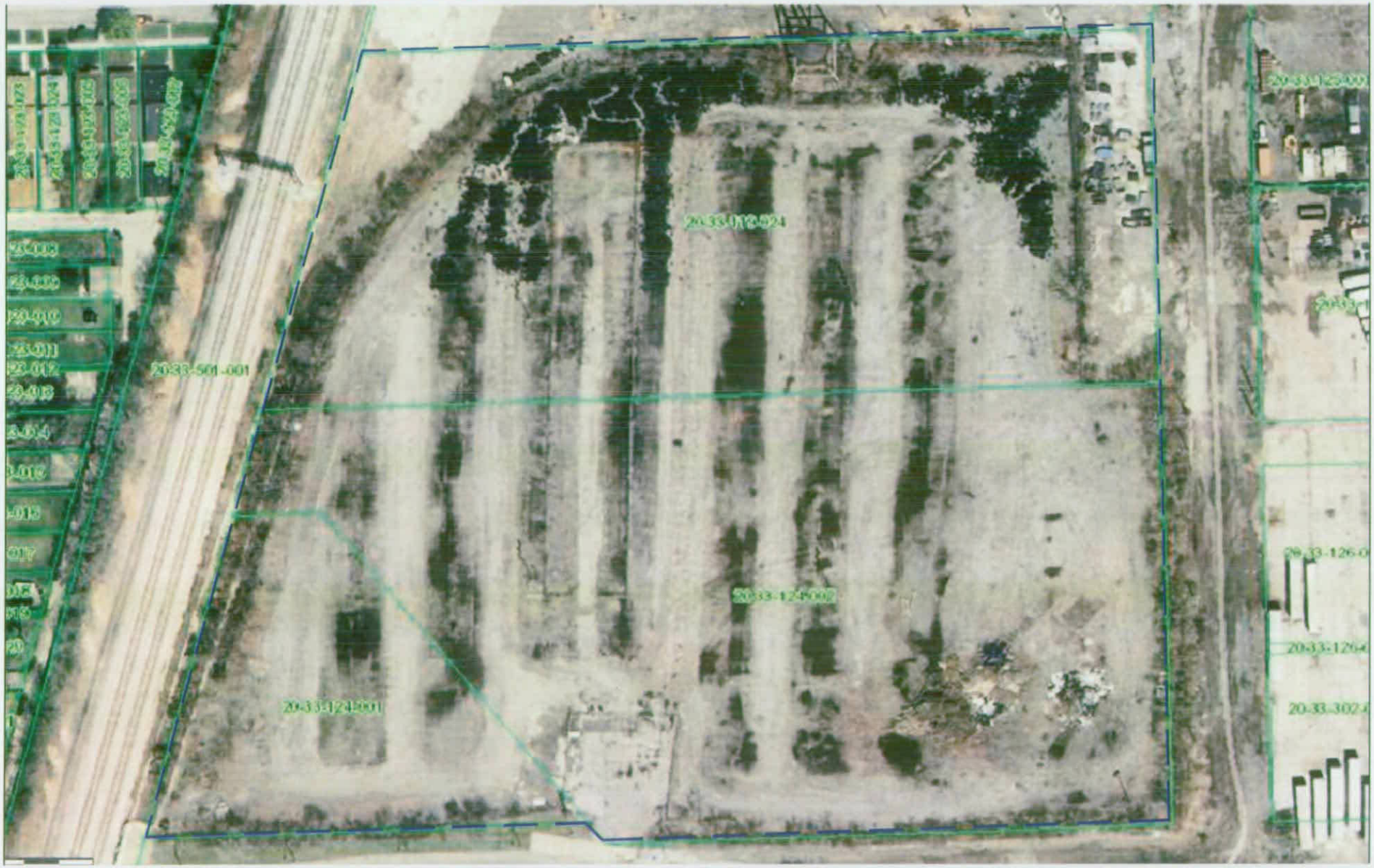

— — Approximate Site Location

N

0 100'

APPROXIMATE SCALE

Project Mngr: RMO	Project No: A2157000
Drawn By: CCD	Scale: AS-SHOWN
Checked By: RMO	Revised By: -
Approved By: RMO	Date: January 23, 2015

Terracon
Consulting Engineers and Scientists
650 W. LAKE ST., SUITE 420 CHICAGO, ILLINOIS 60661
PH. (312) 575-0014 FAX. (312) 575-0111

SITE PIN MAP

PHASE I ENVIRONMENTAL SITE ASSESSMENT
650 WEST 83RD STREET
CHICAGO, COOK COUNTY, ILLINOIS

EXHIBIT
3

DIAGRAM IS FOR GENERAL LOCATION ONLY, AND IS NOT INTENDED FOR CONSTRUCTION PURPOSES.

N:\Projects\2013\A2137008\Working Files\Diagrams-Drawings-Figures\Drawings A2137008.dwg

Exhibit 4

Wetlands and Floodplain Map

U.S. Fish and Wildlife Service

National Wetlands Inventory

wetlands

Jan 13, 2015

Wetlands

- Freshwater Emergent
- Freshwater Forested/Shrub
- Estuanne and Marine Deepwater
- Estuarine and Marine
- Freshwater Pond
- Lake
- Riverine
- Other

Riparian

- Herbaceous
- Forested/Shrub

Riparian Status

- Digital Data

This map is for general reference only. The US Fish and Wildlife Service is not responsible for the accuracy or currentness of the base data shown on this map. All wetlands related data should be used in accordance with the layer metadata found on the Wetlands Mapper web site.

User Remarks:

APPENDIX A

Aerial Photographs

INQUIRY #: 3624052.5
YEAR: 1938
= 500'
N

INQUIRY #: 3624052.5
YEAR: 1952
= 500'
N

INQUIRY #: 3624052.5
YEAR: 1962
= 500'
N

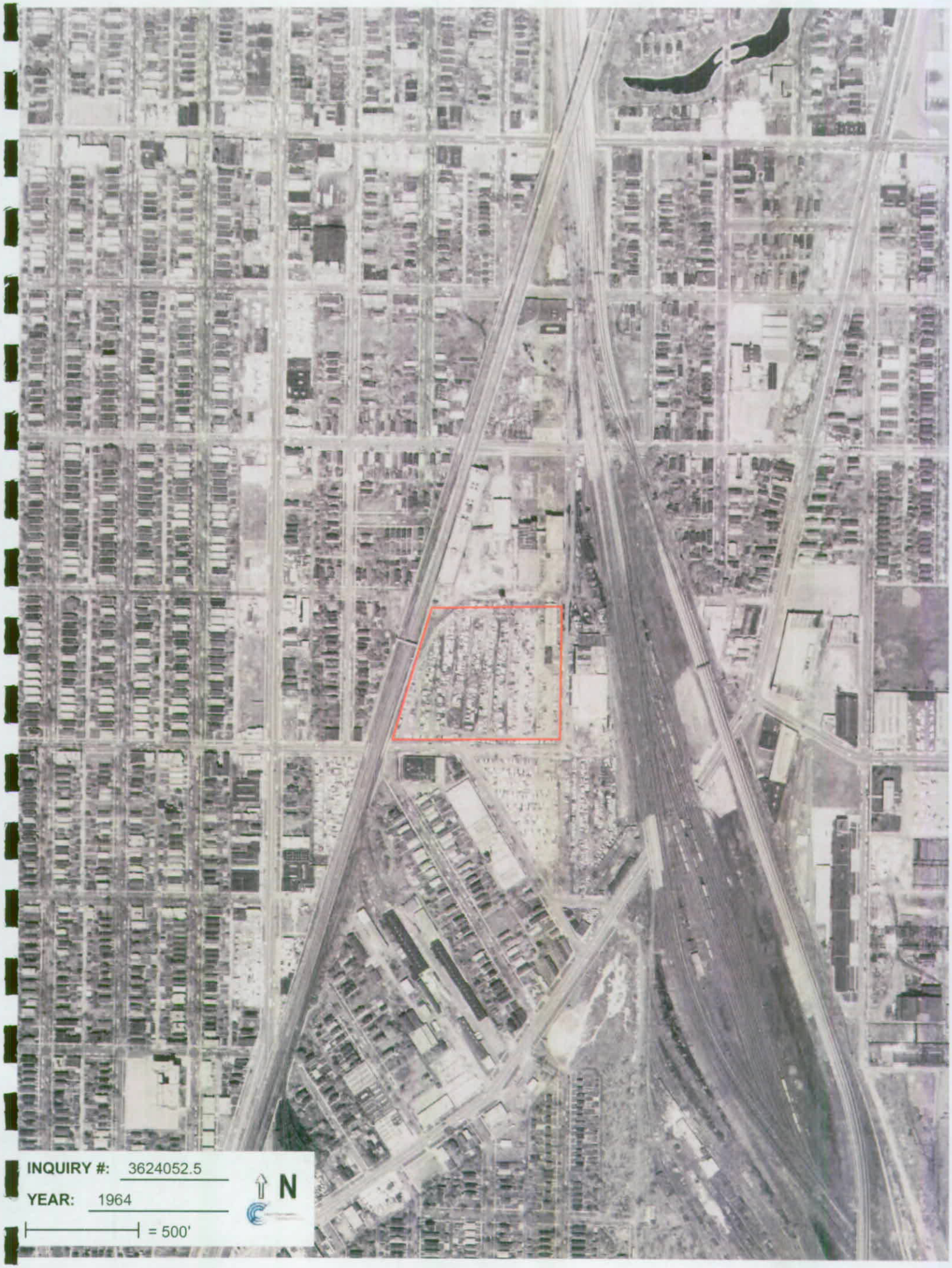
INQUIRY #: 3624052.5
YEAR: 1964
= 500'
N

INQUIRY #: 3624052.5

YEAR: 1972

= 750'

N

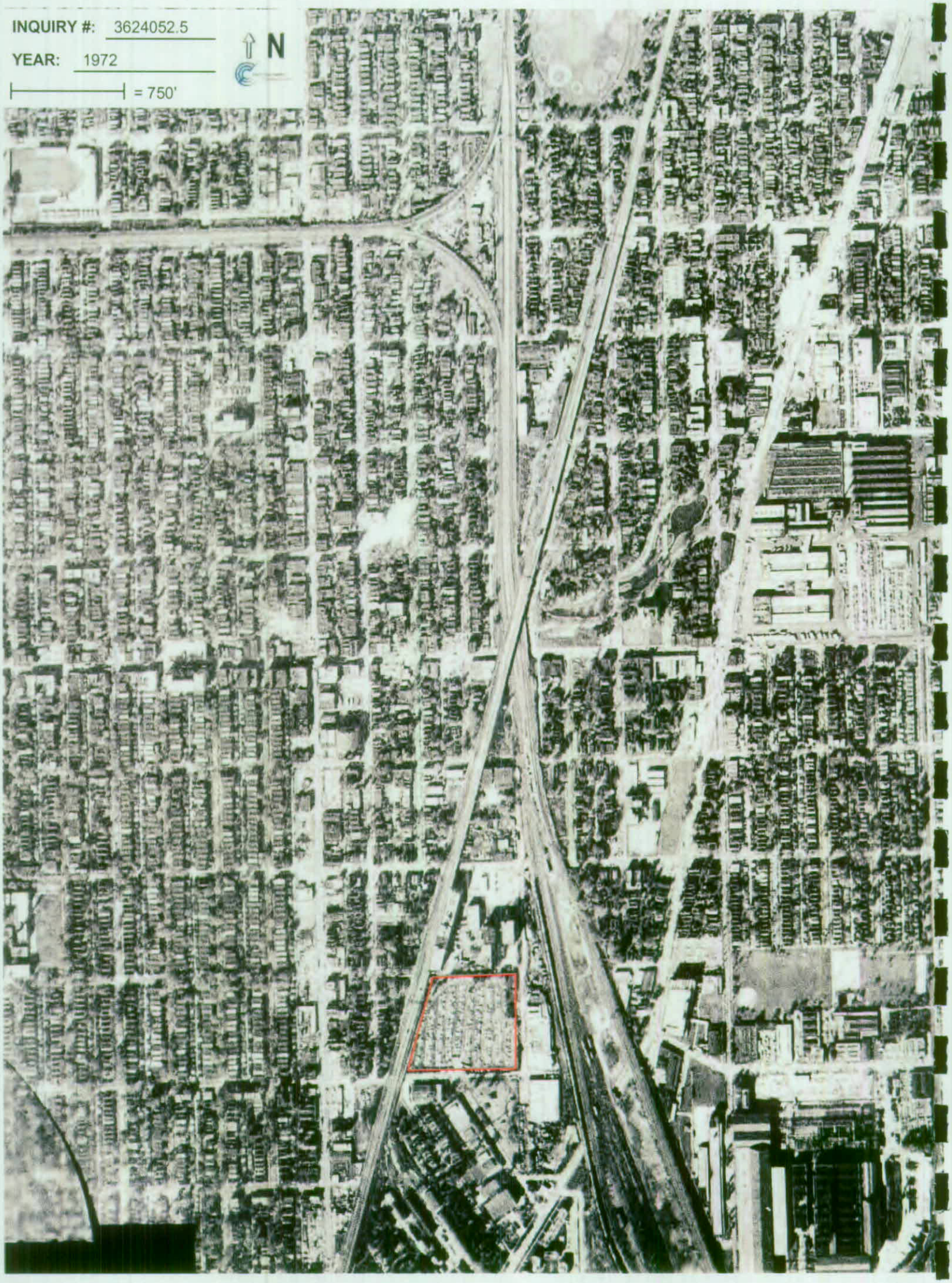

INQUIRY #: 3624052.5
YEAR: 1978
= 500'
N

INQUIRY #: 3624052.5
YEAR: 1984
= 500'
N

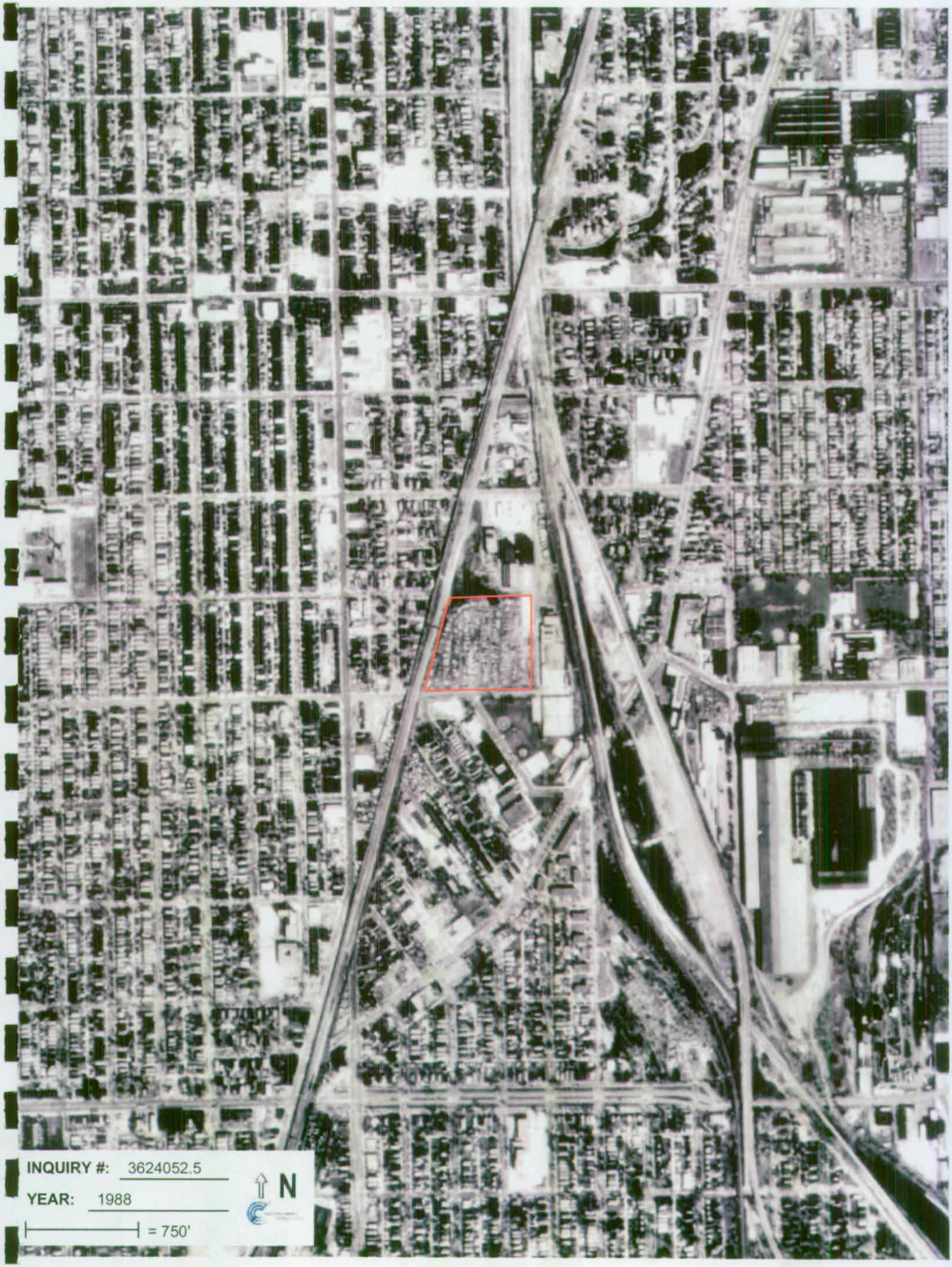
INQUIRY #: 3624052.5
YEAR: 1988
= 750'
N

INQUIRY #: 3624052.5
YEAR: 1994
= 750'
N

INQUIRY #: 3624052.5
YEAR: 1999
= 500'
N

INQUIRY #: 3624052.5
YEAR: 2005
= 500'
N

INQUIRY #: 3624052.5
YEAR: 2007
= 500'
N

INQUIRY #: 3624052.5
YEAR: 2009
= 500'
N

INQUIRY #: 3624052.5
YEAR: 2010
= 500'
N

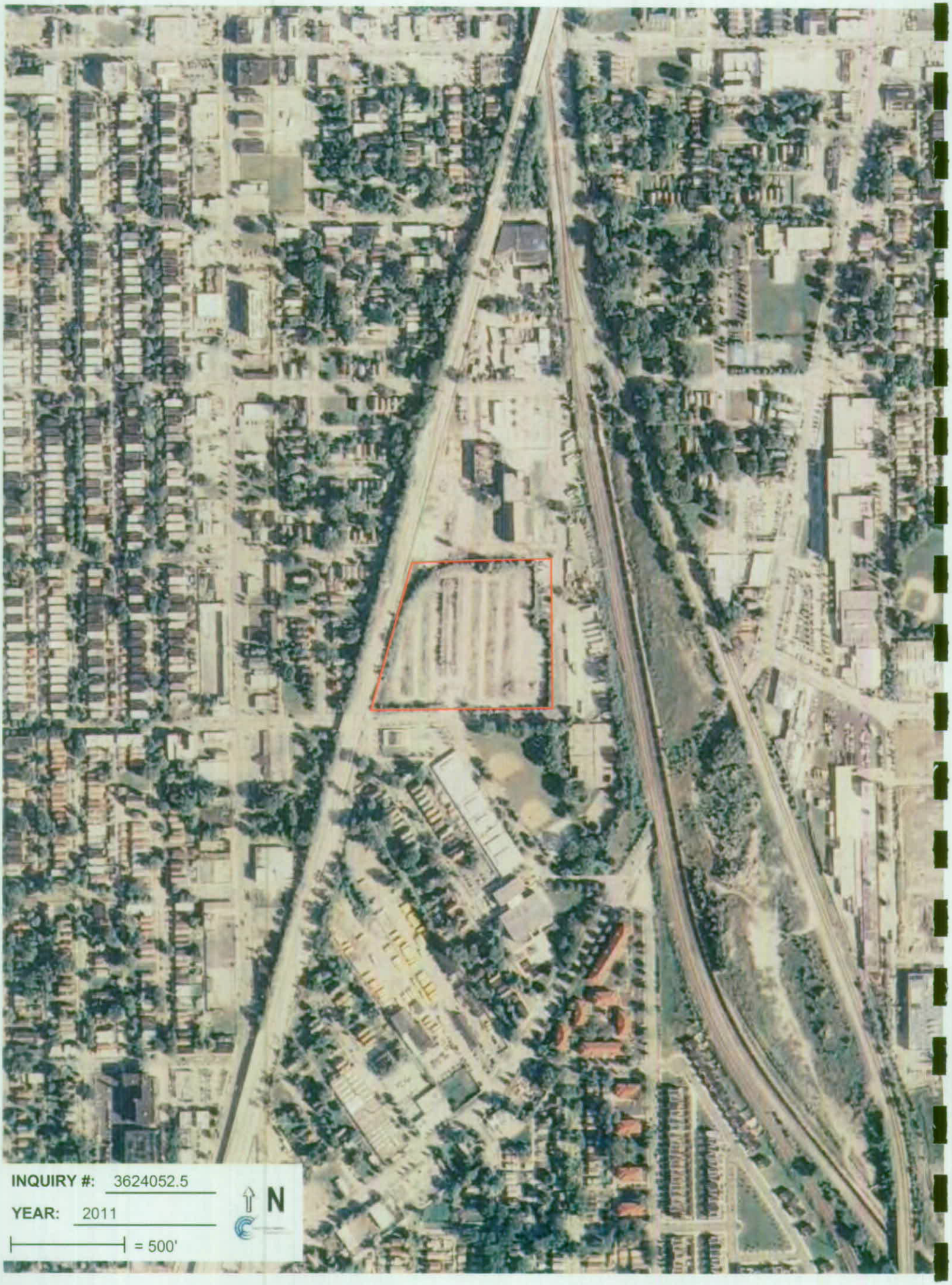
INQUIRY #: 3624052.5
YEAR: 2011
= 500'
N

INQUIRY #: 3624052.5
YEAR: 2012
= 500'
N

APPENDIX B

Topographic Maps

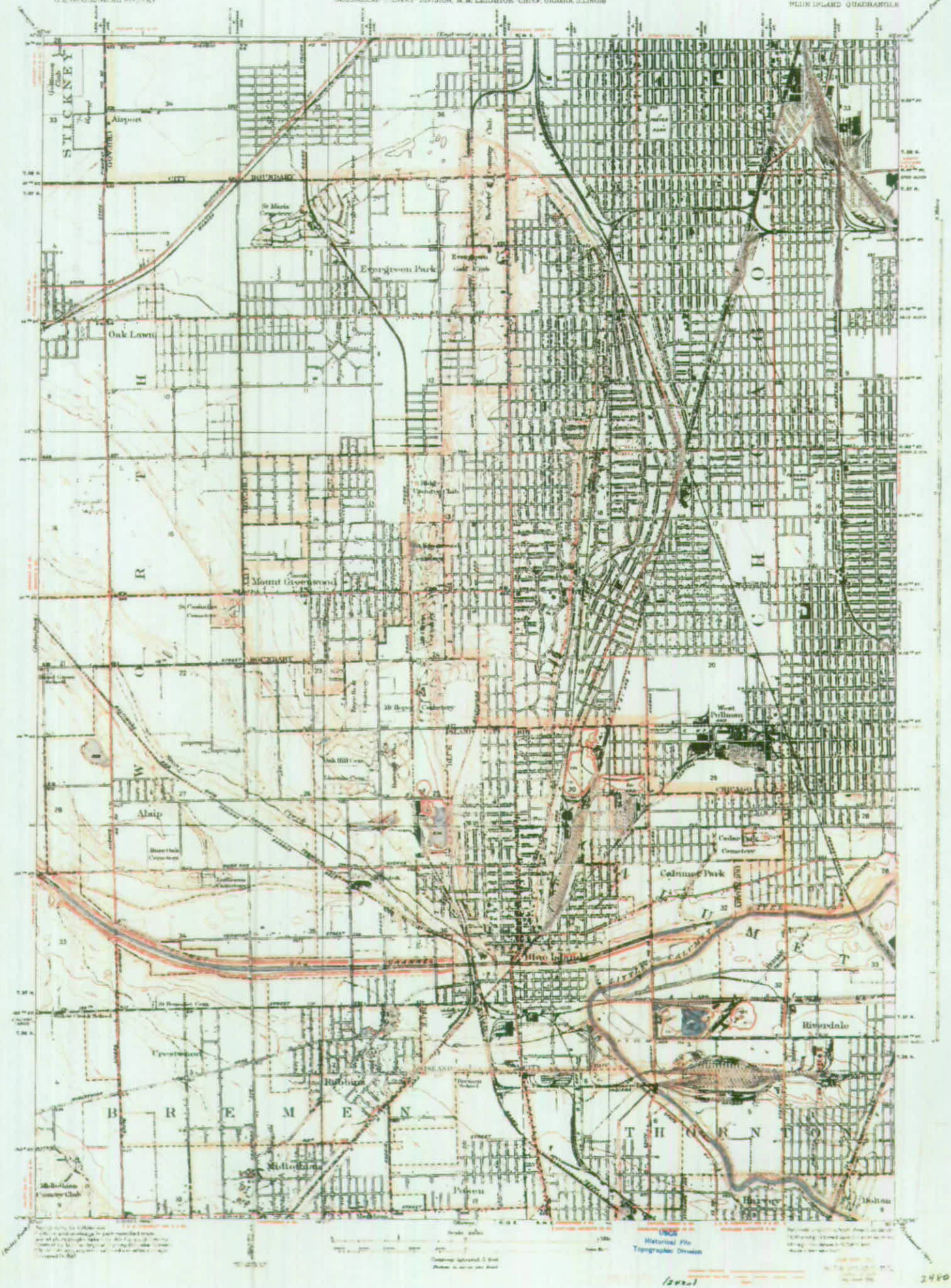
STATE OF ILLINOIS
DEPARTMENT OF THE INTERIOR
U.S. GEOLOGICAL SURVEY
ILLINOIS
FLUE ISLAND QUADRANGLE
STICKNEY
Airport
CITY BOUNDARY
Evergreen Park
Oak Lawn
Mount Greenwood
West Pullman
Alsip
Calumet Park
Riverdale
Robbins
Midlothian
Posen
Harvey
Dolton
B R E M E N
T H O R N T O N
USGS
Historical File
Topographic Division
2480

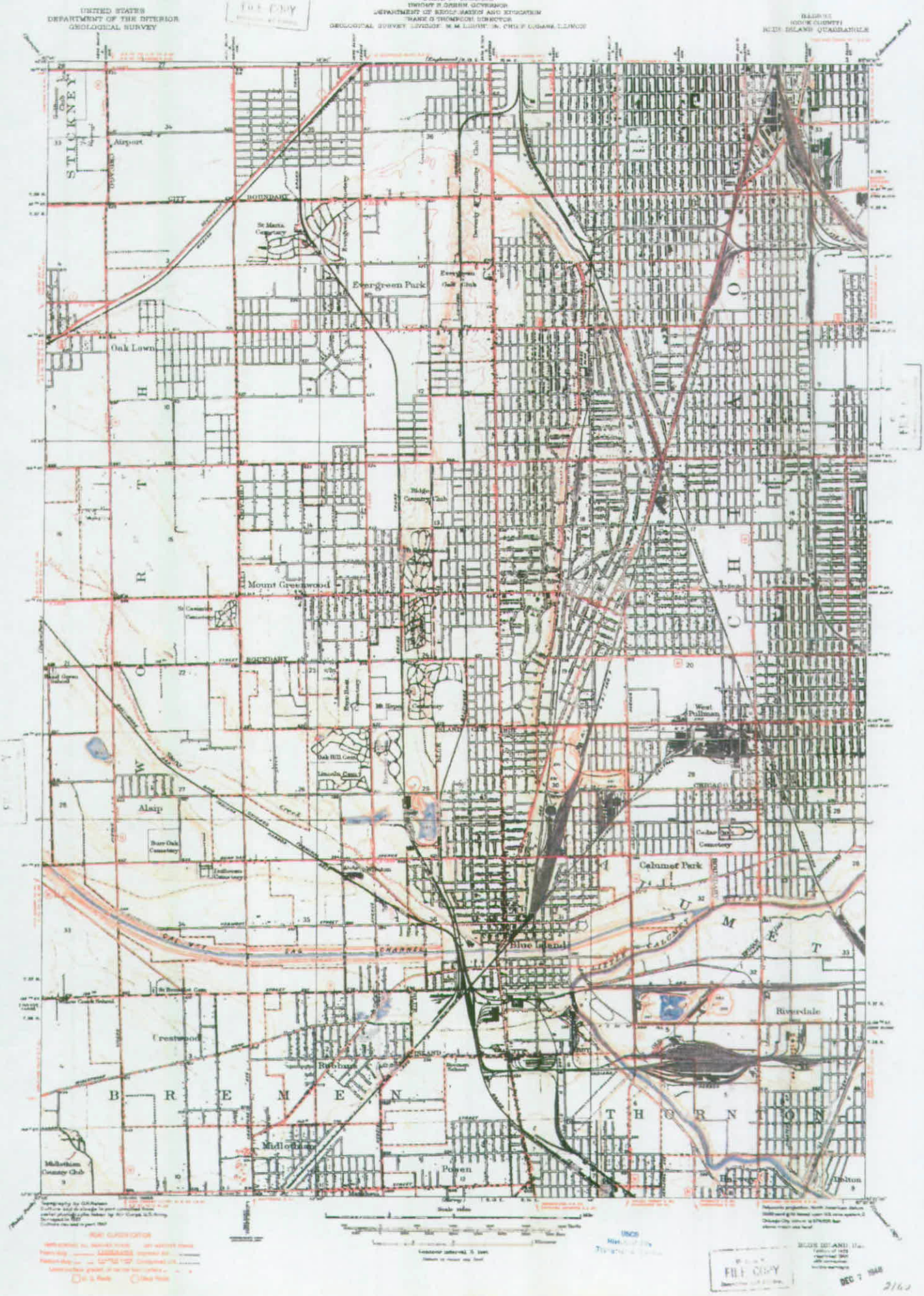
UNITED STATES
DEPARTMENT OF THE INTERIOR
GEOLOGICAL SURVEY
STATE OF ILLINOIS
DEPARTMENT OF REGULATION AND EDUCATION
GEOLOGICAL SURVEY
STICKNEY
Airport
CITY BOUNDARY
St Marks Cemetery
Evergreen Park
Evergreen Golf Club
Oak Lawn
Ridge Country Club
Mount Greenwood
St Casimirs Cemetery
Mt Hope Cemetery
West Pullman
Oak Hill Cem
Lincoln Cem
Alsip
Burr Oak Cemetery
Cedar Cemetery
Calumet Park
Blue Island
Riverdale
Crestwood
Rubbins
Midlothian
Midlothian Country Club
Powen
Harvey
Dolton
B R E M E N
T H O R N T O N
C H I C A G O
A L U M E T
Scale 1:62 500
Contour interval 5 feet
FILE COPY
DEC 7 1948

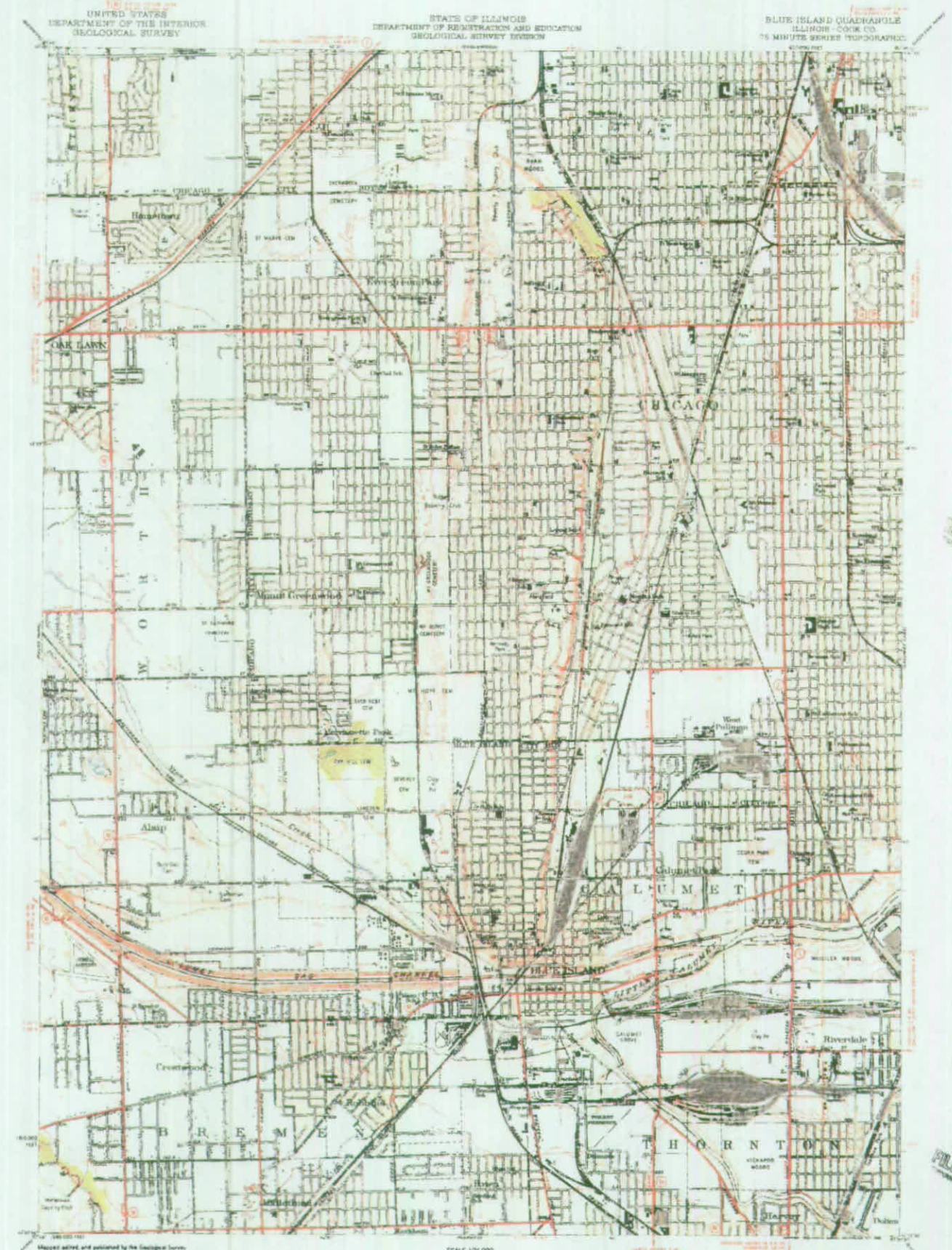
UNITED STATES
DEPARTMENT OF THE INTERIOR
GEOLOGICAL SURVEY
STATE OF ILLINOIS
DEPARTMENT OF REGISTRATION AND EDUCATION
GEOLOGICAL SURVEY DIVISION
BLUE ISLAND QUADRANGLE
ILLINOIS - COOK CO.
75 MINUTE SERIES (TOPOGRAPHIC)
OAK LAWN
CHICAGO
Mount Greenwood
Alsip
Calumet Park
BLUE ISLAND
Riverdale
Crestwood
Harvey
Dolton
SCALE 1:24 000
CONTOUR INTERVAL 5 FEET
DATUM IS MEAN SEA LEVEL
ROAD CLASSIFICATION
U.S. Route
State Route
BLUE ISLAND, ILL.
1953

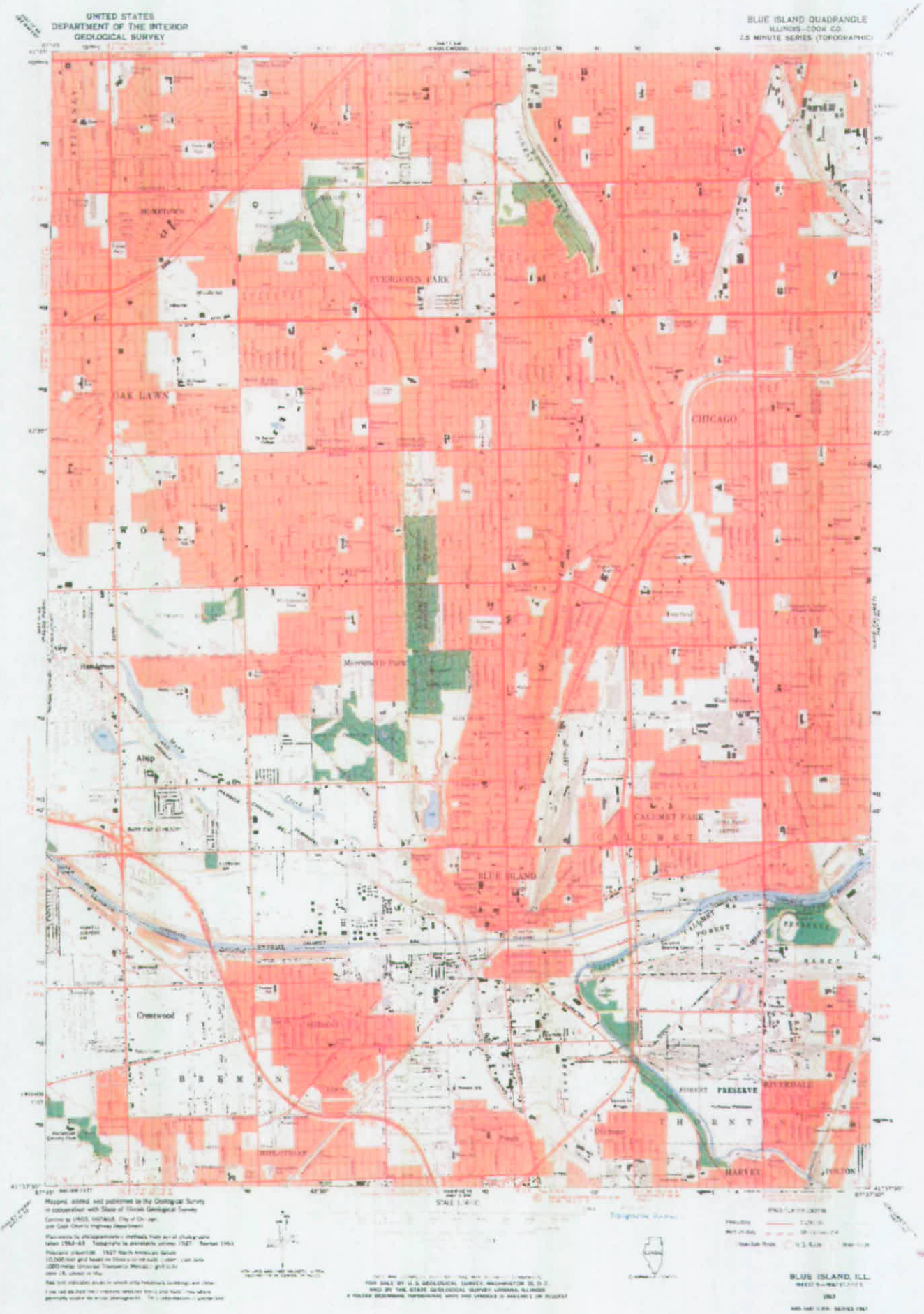
UNITED STATES
DEPARTMENT OF THE INTERIOR
GEOLOGICAL SURVEY
BLUE ISLAND QUADRANGLE
ILLINOIS-COOK CO.
7.5 MINUTE SERIES (TOPOGRAPHIC)
HOMEDOWN
EVERGREEN PARK
OAK LAWN
CHICAGO
Merrimac Park
Alsip
CALUMET PARK
BLUE ISLAND
Crestwood
FOREST PRESERVE
RIVERDALE
HARVEY
POLTON
Mapped, edited, and published by the Geological Survey in cooperation with State of Illinois Geological Survey
FOR SALE BY U. S. GEOLOGICAL SURVEY, WASHINGTON 25, D. C.
AND BY THE STATE GEOLOGICAL SURVEY, URBANA, ILLINOIS
BLUE ISLAND, ILL.

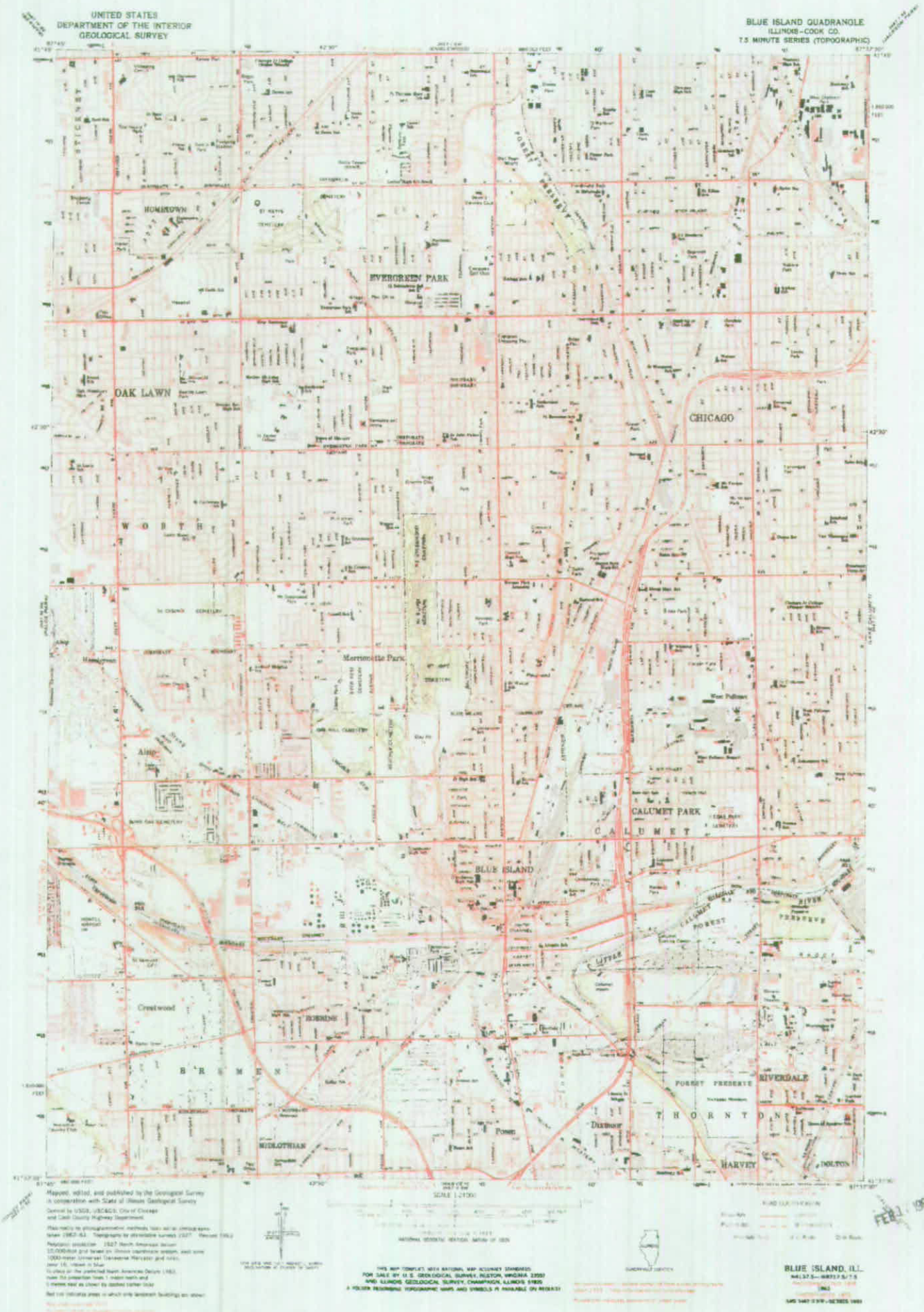
UNITED STATES
DEPARTMENT OF THE INTERIOR
GEOLOGICAL SURVEY
BLUE ISLAND QUADRANGLE
ILLINOIS-COOK CO.
7.5 MINUTE SERIES (TOPOGRAPHIC)
HOMEWOOD
EVERGREEN PARK
OAK LAWN
CHICAGO
W O R T H
Morningside Park
CALUMET PARK
C A L U M E T
BLUE ISLAND
Crestwood
B R E M E N
RIVERDALE
T H O R N T O N
MIDLOTHIAN
Posen
Dixmoor
HARVEY
DOLTON
FEB 1 1984

UNITED STATES
DEPARTMENT OF THE INTERIOR
GEOLOGICAL SURVEY

BLUE ISLAND QUADRANGLE
ILLINOIS–COOK CO.
7.5 MINUTE SERIES (TOPOGRAPHIC)

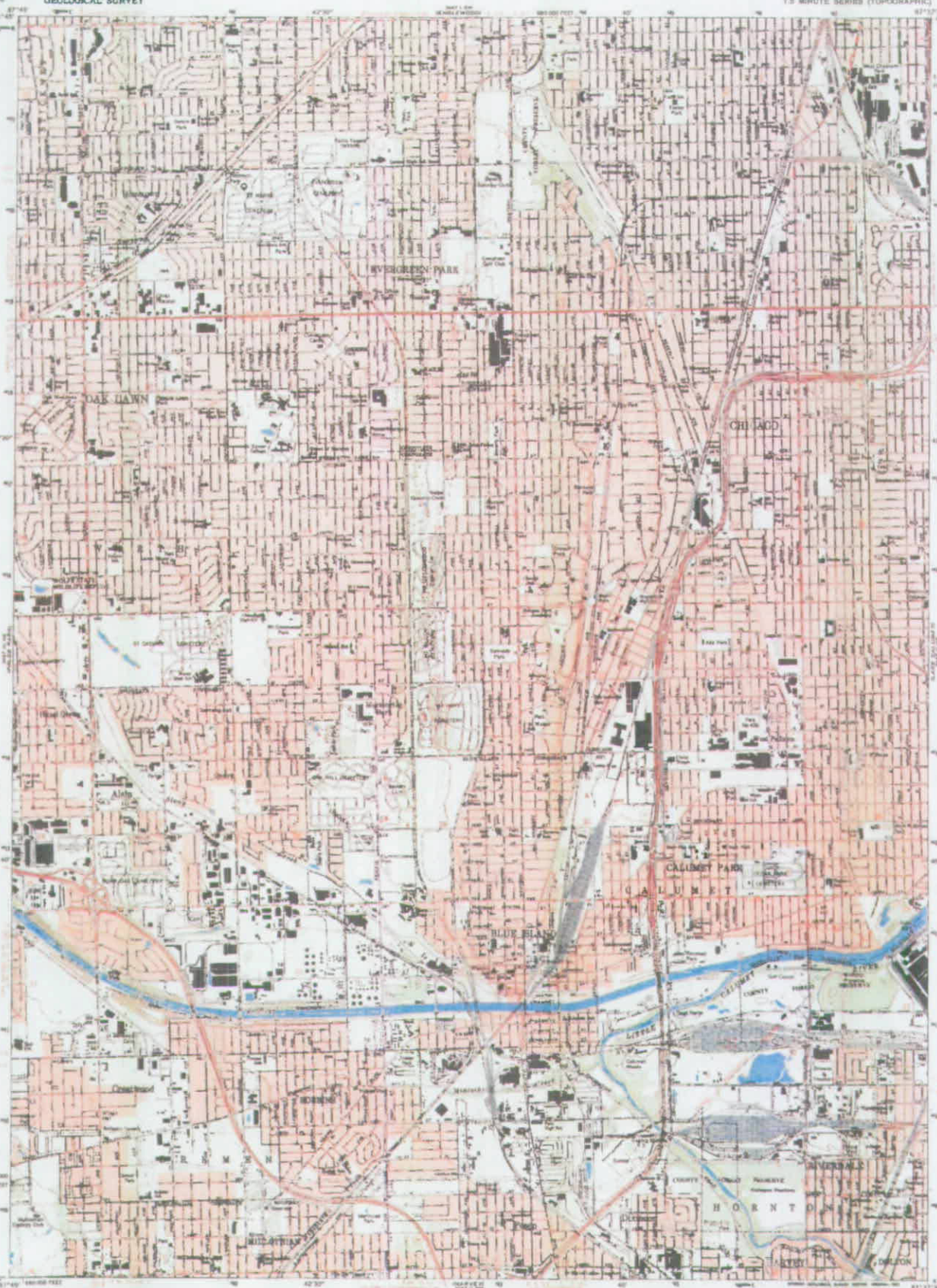

Produced by the United States Geological Survey
in cooperation with State of Illinois Geological Survey
Control by USGS, NOS/NOAA, City of Chicago and
Cook County Highway Department

Planimetry by photogrammetric methods from aerial photographs taken 1962-63. Topography by plane-table surveys 1927. Revised from aerial photographs taken 1988. Field checked 1990
Map edited 1993

Projection and 10,000-foot grid ticks, Illinois coordinate system, east zone transverse Mercator
1000-meter Universal Transverse Mercator grid ticks, zone 16, shown in blue
1927 North American Datum (NAD 27)

North American Datum of 1983 (NAD 83) is shown by dashed corner ticks
The values of the shift between NAD 27 and NAD 83 for 7.5-minute intersections are given in USGS Bulletin 1975

There may be private inholdings within the boundaries of the National or State reservations shown on this map

Red tint indicates areas in which only landmark buildings are shown

SCALE 1:24 000

CONTOUR INTERVAL 5 FEET
NATIONAL GEODETIC VERTICAL DATUM OF 1929

THIS MAP COMPLIES WITH NATIONAL MAP ACCURACY STANDARDS
FOR SALE BY U. S. GEOLOGICAL SURVEY, DENVER, COLORADO 80225, OR RESTON, VIRGINIA 22092
AND ILLINOIS GEOLOGICAL SURVEY, CHAMPAIGN, ILLINOIS 61820
A FOLDER DESCRIBING TOPOGRAPHIC MAPS AND SYMBOLS IS AVAILABLE ON REQUEST

QUADRANGLE LOCATION

ROAD CLASSIFICATION

Primary highway, hard surface — Light-duty road, hard or improved surface
Secondary highway, hard surface — Unimproved road
Interstate Route — U. S. Route — State Route

BLUE ISLAND, ILL.
41087-F5-TF-024
1993

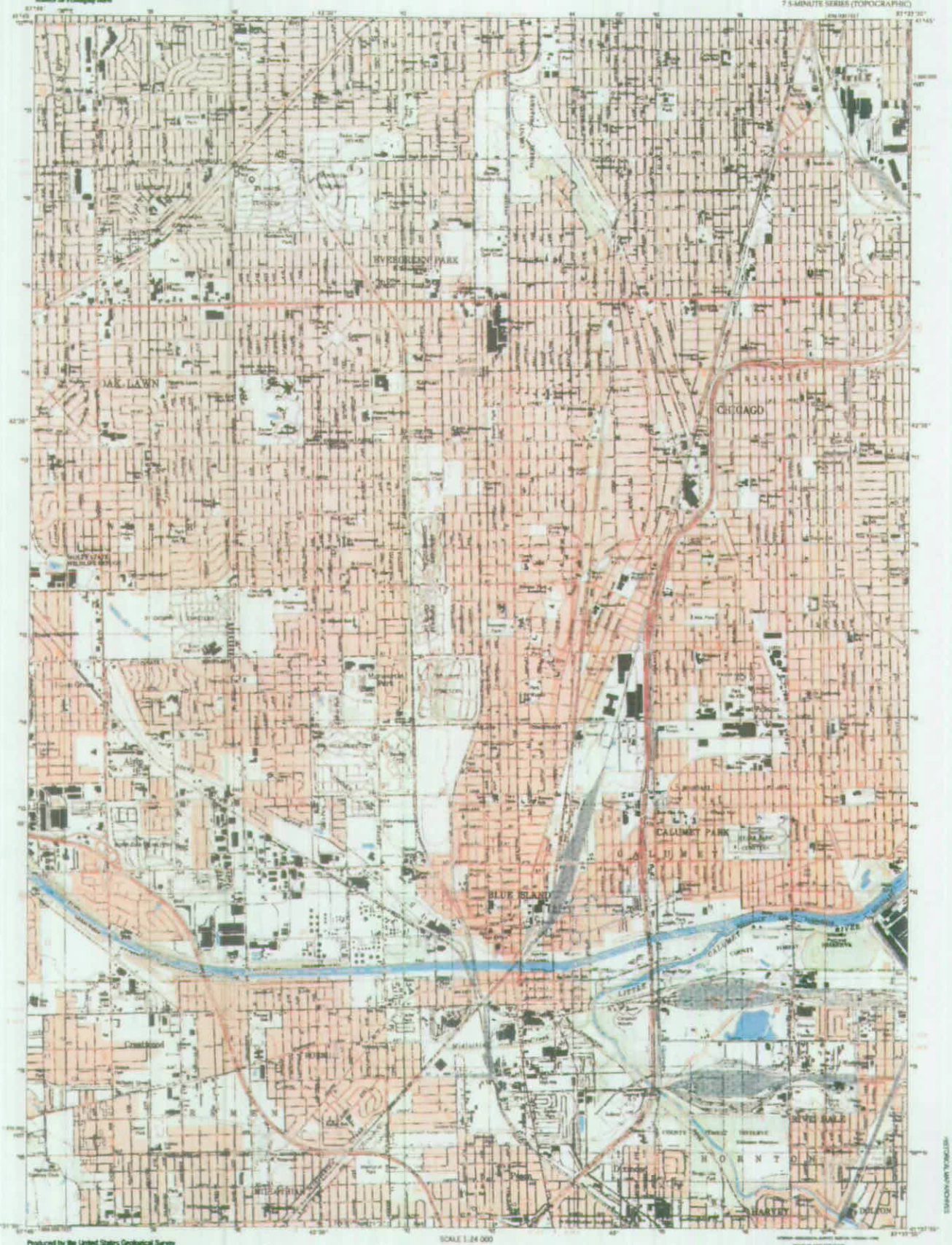

RECEIVED
MAR 31 PM
HISTORICAL MAP/WORKS

APPENDIX C

Sanborn Maps

2004 Certified Sanborn Map

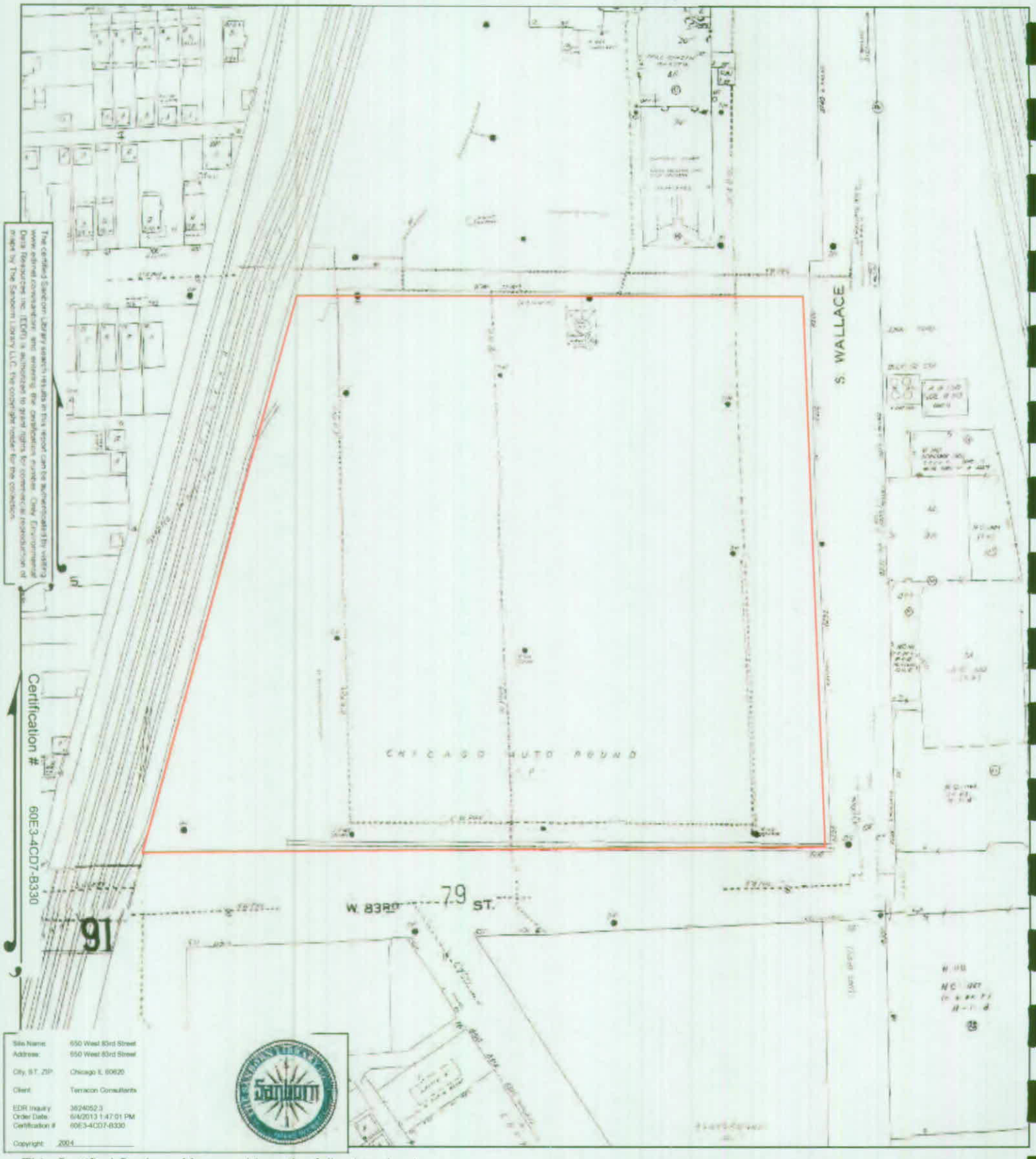

The certified Sanborn Library search results in this report can be authenticated by visiting www.edrnet.com/sanborn, and entering the certification number. Only Environmental Data Resources Inc. (EDR) is authorized to grant rights for commercial reproduction of maps by The Sanborn Library LLC. For copyright notice for this collection.

Certification # 60E3-4CD7-B330

Site Name:	550 West 83rd Street
Address:	550 West 83rd Street
City, ST, ZIP:	Chicago IL 60620
Client:	Terracon Consultants
EDR Inquiry:	3624052.3
Order Date:	6/4/2013 1:47:01 PM
Certification #:	60E3-4CD7-B330
Copyright:	2004

This Certified Sanborn Map combines the following sheets.
Outlined areas indicate map sheets within the collection.

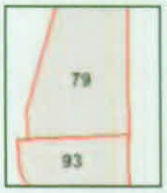

Volume 25, Sheet 79
Volume 25, Sheet 93

0 Feet 150 300 600

N

2002 Certified Sanborn Map

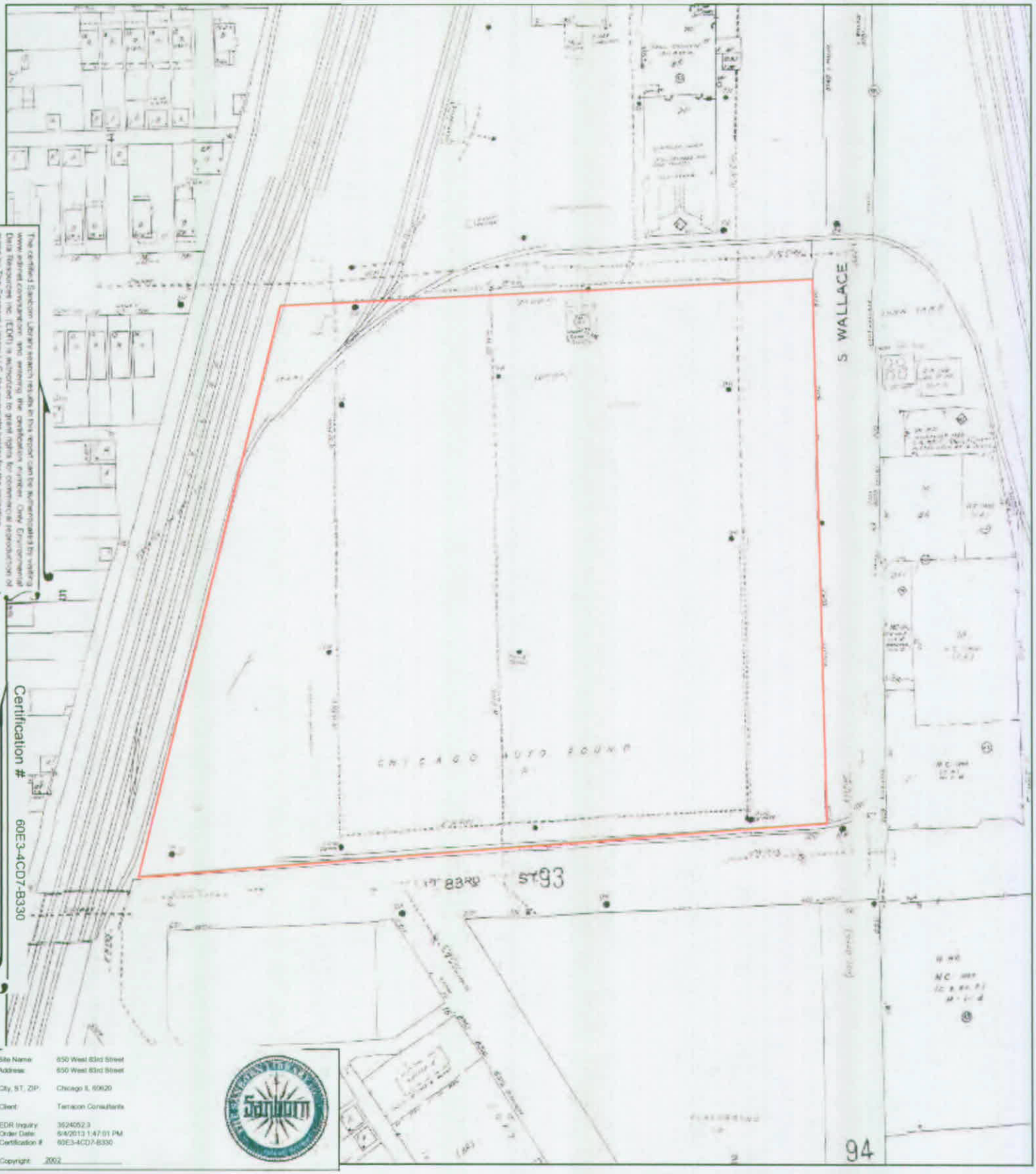

The certified Sanborn Library search results in this report can be authenticated by visiting www.edrnet.com/sanborn, and entering the certification number. Only Environmental Data Resources Inc. (EDR) is authorized to grant rights for commercial reproduction of maps by The Sanborn Library LLC, the copyright holder for the content.

Certification # 60E3-4CD7-B330

Site Name: 650 West 83rd Street
Address: 650 West 83rd Street
City, ST, ZIP: Chicago IL 60620
Client: Terracon Consultants
EDR Inquiry: 3624052.3
Order Date: 6/4/2013 1:47:01 PM
Certification #: 60E3-4CD7-B330

Copyright: 2002

This Certified Sanborn Map combines the following sheets.
Outlined areas indicate map sheets within the collection.

Volume 25, Sheet 78
Volume 25, Sheet 79
Volume 25, Sheet 93
Volume 25, Sheet 93

0 Feet 150 300 600

N

1992 Certified Sanborn Map

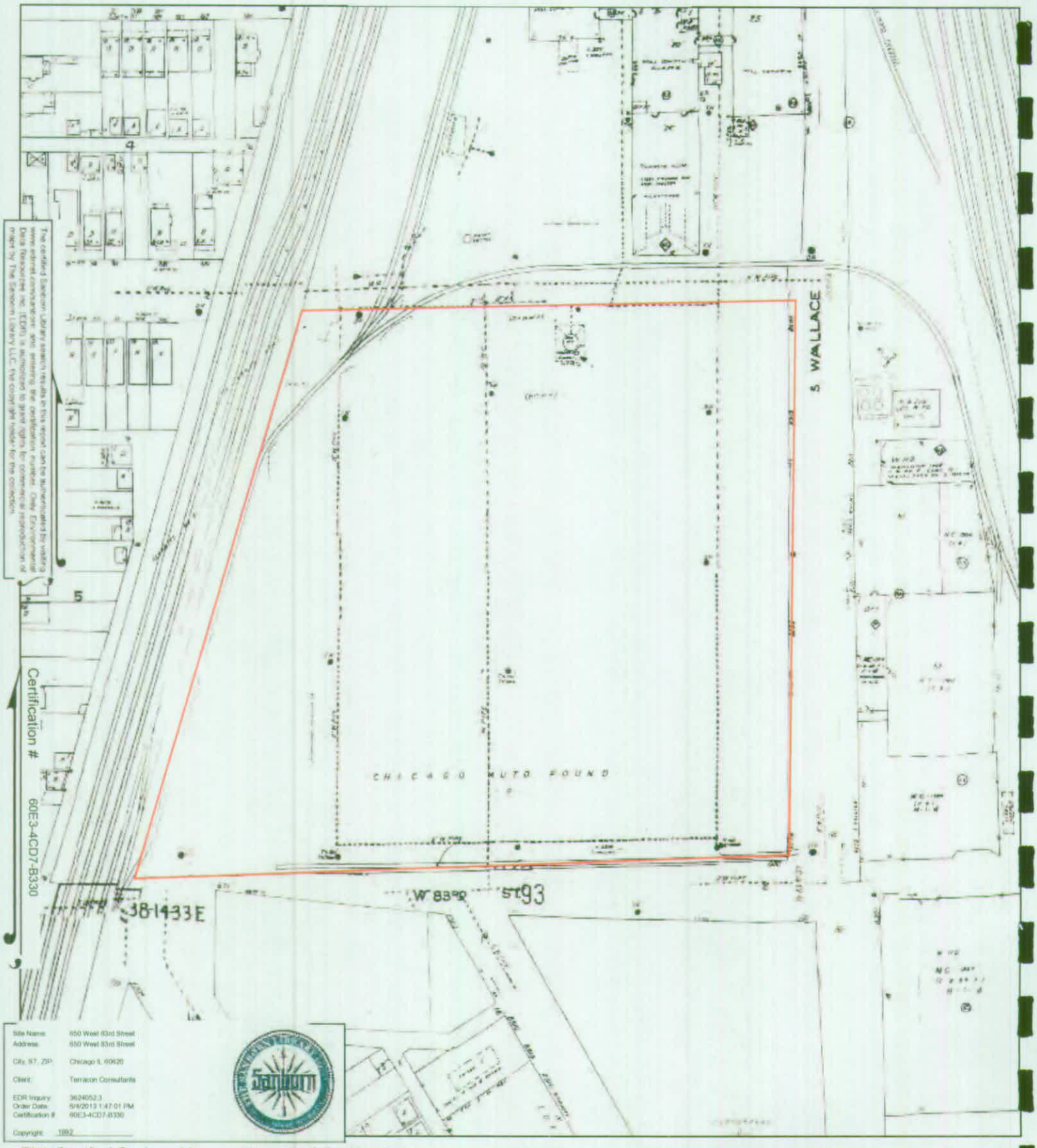

The certified Sanborn Library search results on this report can be authenticated by visiting www.edrnet.com/sanborn and entering the certification number. Only Environmental Data Resources Inc. (EDR) is authorized to grant rights for commercial reproduction of maps by The Sanborn Library LLC, the copyright holder for the collection.

Certification # 60E3-4CD7-B330

Site Name:	850 West 83rd Street
Address:	850 West 83rd Street
City, ST, ZIP:	Chicago IL 60620
Client:	Terracon Consultants
EDR Inquiry:	3624052.3
Order Date:	5/4/2013 1:47:01 PM
Certification #:	60E3-4CD7-B330
Copyright:	1992

This Certified Sanborn Map combines the following sheets.
Outlined areas indicate map sheets within the collection.

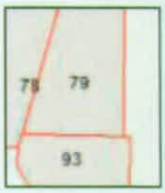

Volume 25, Sheet 78
Volume 25, Sheet 79
Volume 25, Sheet 93

0 Feet 150 300 600

N

1989 Certified Sanborn Map

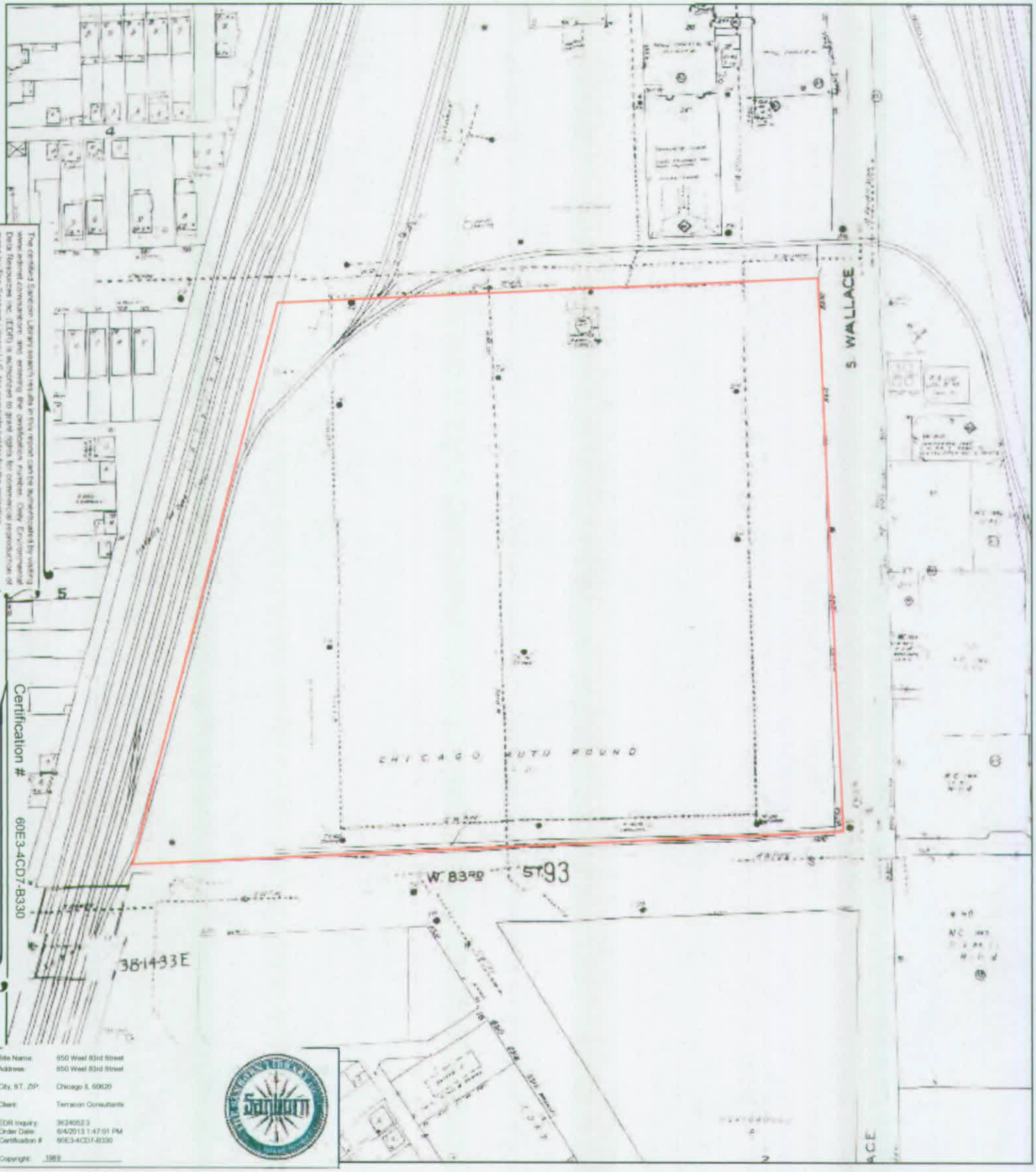

The certified Sanborn Library search results in this report can be authenticated by visiting www.edrnet.com/sanborn and entering the certification number. Only Environmental Data Resources Inc. (EDR) is authorized to grant rights for commercial reproduction of maps by The Sanborn Library LLC, the copyright holder for the collection.

Certification # 60E3-4CD7-B330

Site Name:	650 West 83rd Street
Address:	650 West 83rd Street
City, ST, ZIP:	Chicago IL 60620
Client:	Terracon Consultants
EDR Inquiry:	3624052.3
Order Date:	6/4/2013 1:47:01 PM
Certification #:	60E3-4CD7-B330
Copyright:	1989

This Certified Sanborn Map combines the following sheets.
Outlined areas indicate map sheets within the collection.

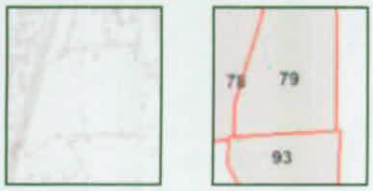

Volume 25, Sheet 78
Volume 25, Sheet 79
Volume 25, Sheet 93

0 Feet 150 300 600

N

1987 Certified Sanborn Map

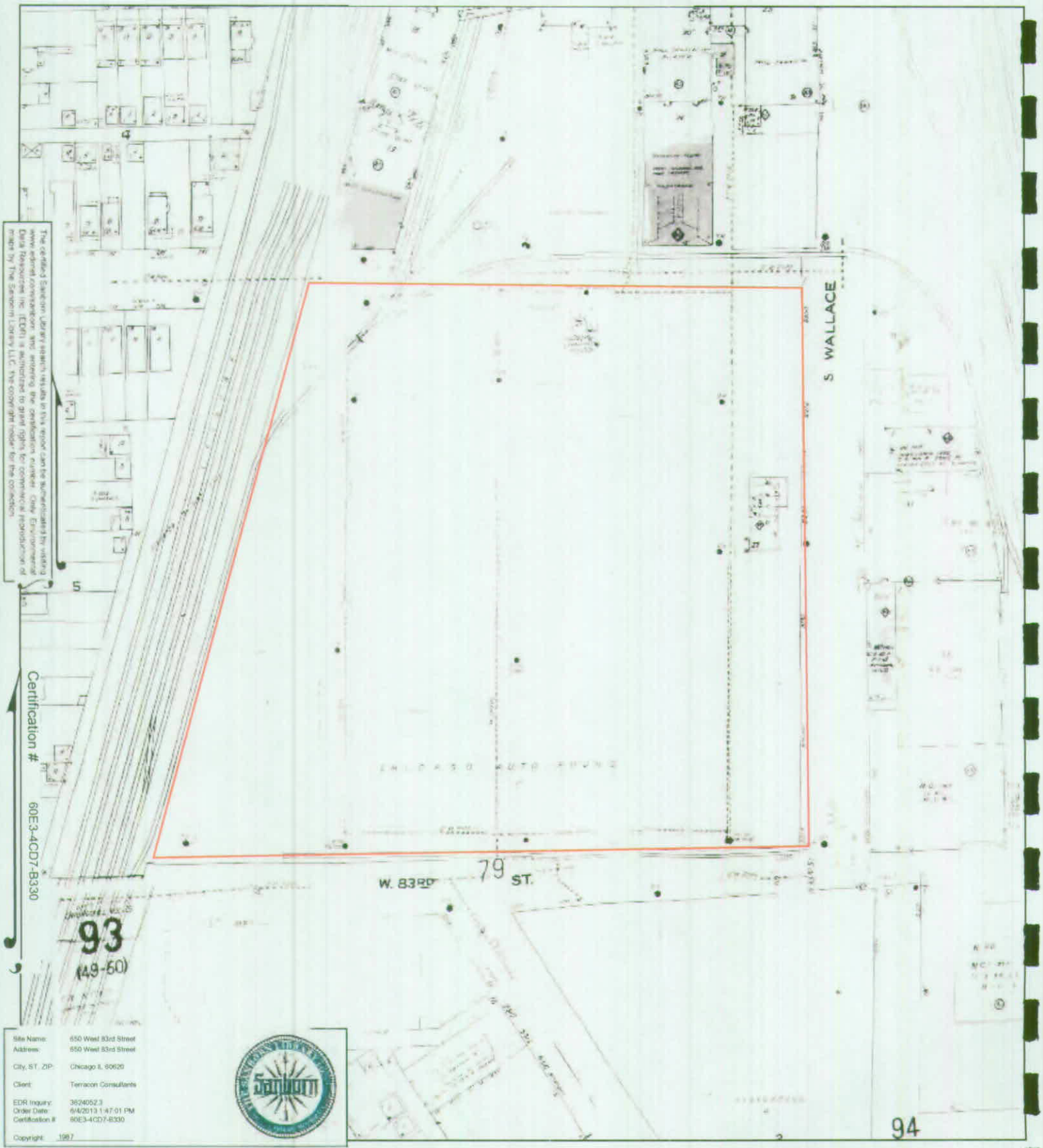

Site Name: 650 West 83rd Street
Address: 650 West 83rd Street
City, ST, ZIP: Chicago IL 60620
Client: Terracon Consultants
EDR Inquiry: 3624052.3
Order Date: 6/4/2013 1:47:01 PM
Certification #: 60E3-4CD7-B330
Copyright: 1987

This Certified Sanborn Map combines the following sheets.
Outlined areas indicate map sheets within the collection.

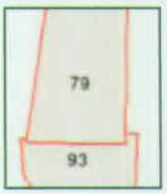

Volume 25, Sheet 93
Volume 25, Sheet 79

0 Feet 150 300 600

N

1975 Certified Sanborn Map

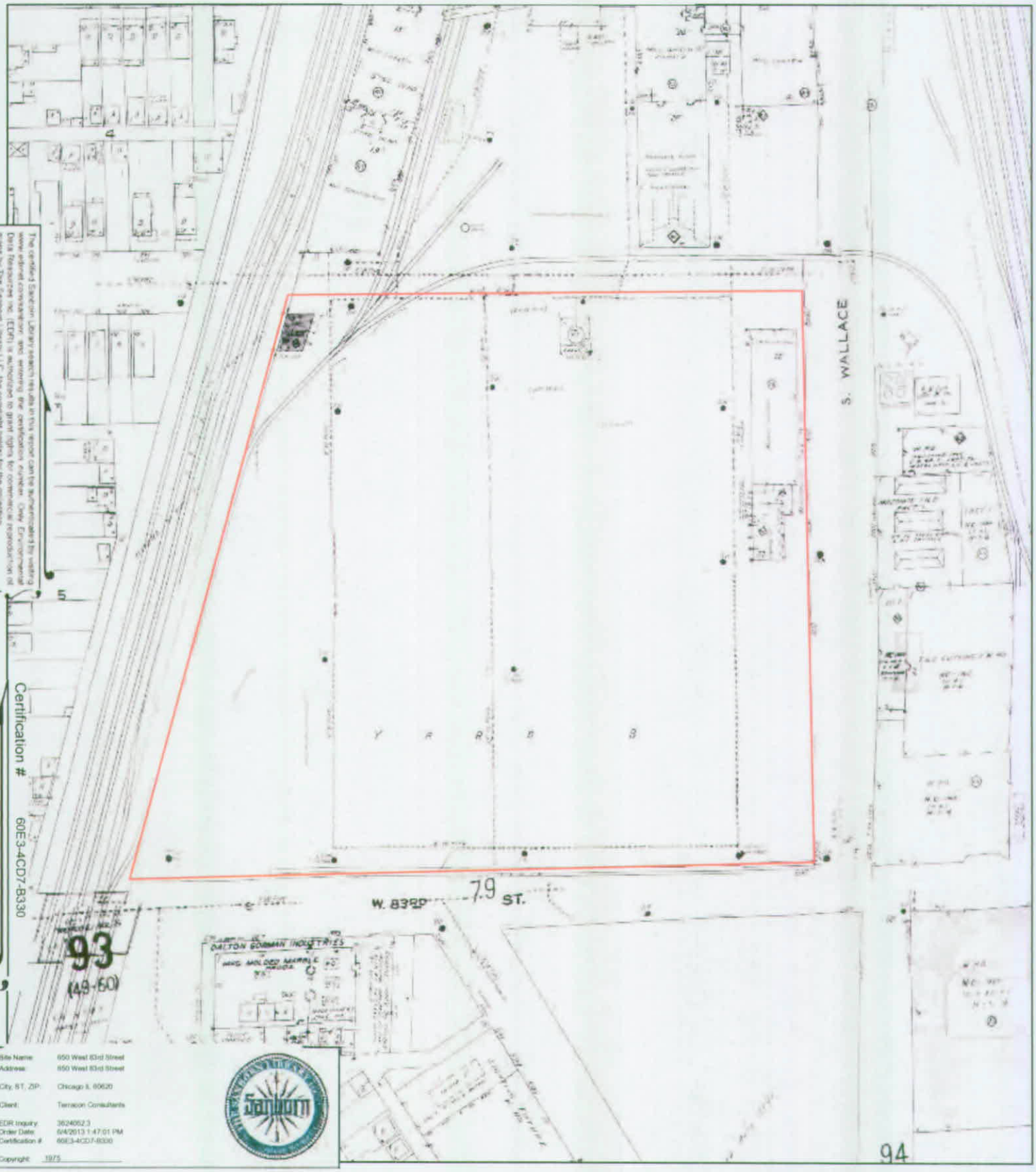

Site Name: 650 West 83rd Street
Address: 650 West 83rd Street
City, ST, ZIP: Chicago IL 60620
Client: Terracon Consultants
EDR Inquiry: 3624052.3
Order Date: 6/4/2013 1:47:01 PM
Certification #: 60E3-4CD7-B330
Copyright: 1975

The certified Sanborn Library search results in this report can be authenticated by visiting www.edrnet.com/sanborn, and entering the certification number. Only Environmental Data Resources Inc. (EDR) is authorized to grant rights for commercial reproduction of maps by The Sanborn Library LLC, the copyright holder for the collection.

This Certified Sanborn Map combines the following sheets.
Outlined areas indicate map sheets within the collection.

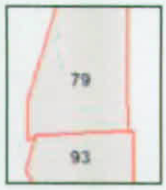

Volume 25, Sheet 79
Volume 25, Sheet 93

0 Feet 150 300 600

N

1951 Certified Sanborn Map

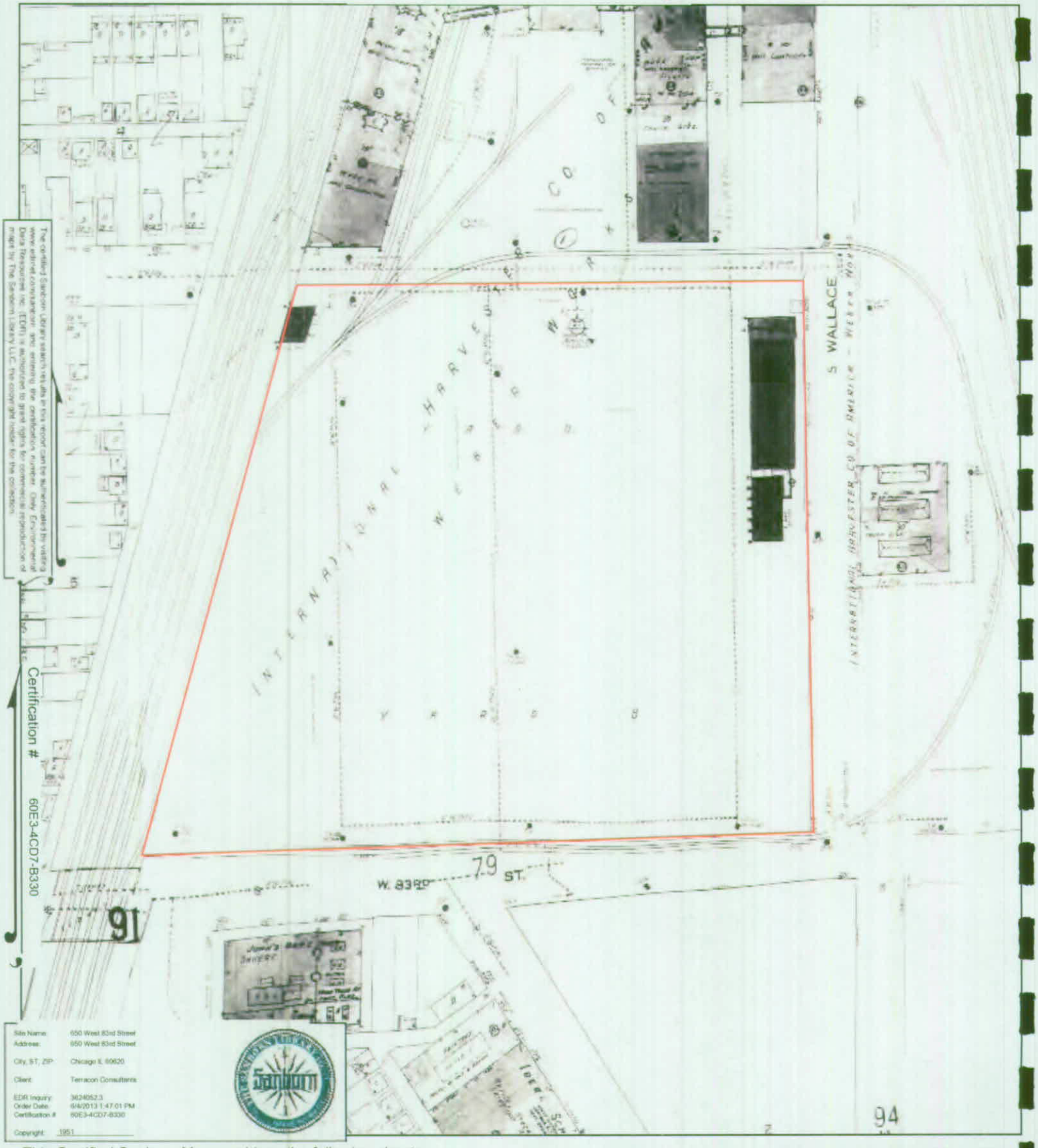

The certified Sanborn Library search results in this report can be authenticated by visiting www.sanborn.com/authenticate and entering the certification number. Only Environmental Data Resources Inc. (EDR) is authorized to grant rights for commercial reproduction of maps by The Sanborn Library LLC, the copyright holder for the collection.

Certification # 60E3-4CD7-B330

Site Name:	650 West 83rd Street
Address:	650 West 83rd Street
City, ST, ZIP:	Chicago IL 60620
Client:	Terracon Consultants
EDR Inquiry:	3624052.3
Order Date:	6/4/2013 1:47:01 PM
Certification #:	60E3-4CD7-B330
Copyright:	1951

This Certified Sanborn Map combines the following sheets.
Outlined areas indicate map sheets within the collection.

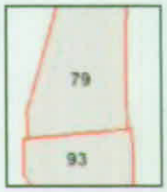

Volume 25, Sheet 79
Volume 25, Sheet 93

0 Feet 150 300 600

N

1924 Certified Sanborn Map

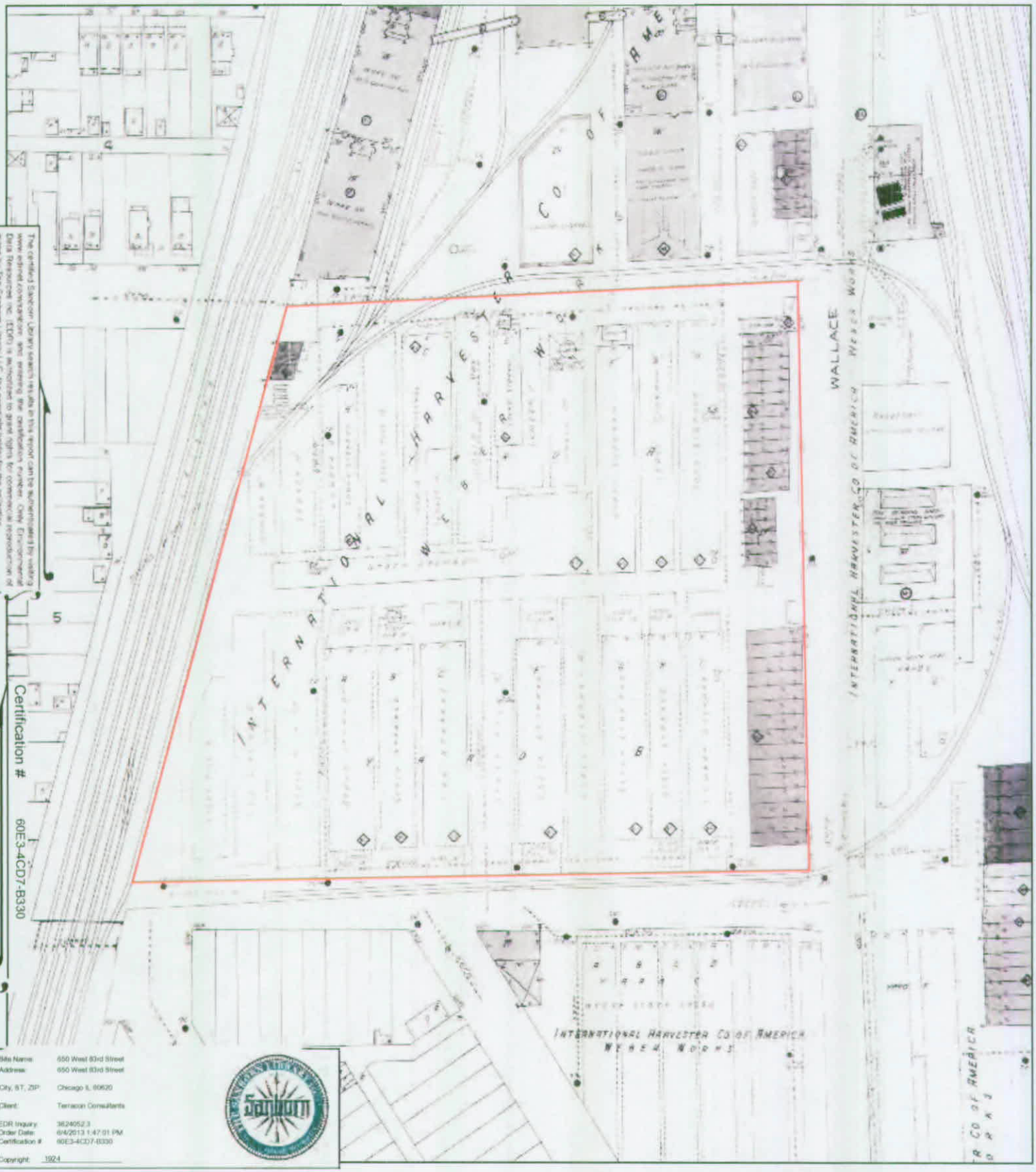

Certification # 60E3-4CD7-B330

Site Name:	650 West 83rd Street
Address:	650 West 83rd Street
City, ST, ZIP:	Chicago IL 60620
Client:	Terracon Consultants
EDR Inquiry:	3624052.3
Order Date:	6/4/2013 1:47:01 PM
Certification #:	60E3-4CD7-B330
Copyright:	1924

This Certified Sanborn Map combines the following sheets.
Outlined areas indicate map sheets within the collection.

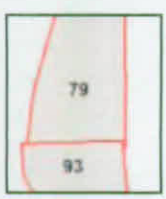

Volume 25, Sheet 79
Volume 25, Sheet 93

0 Feet 150 300 600

N

1910 Certified Sanborn Map

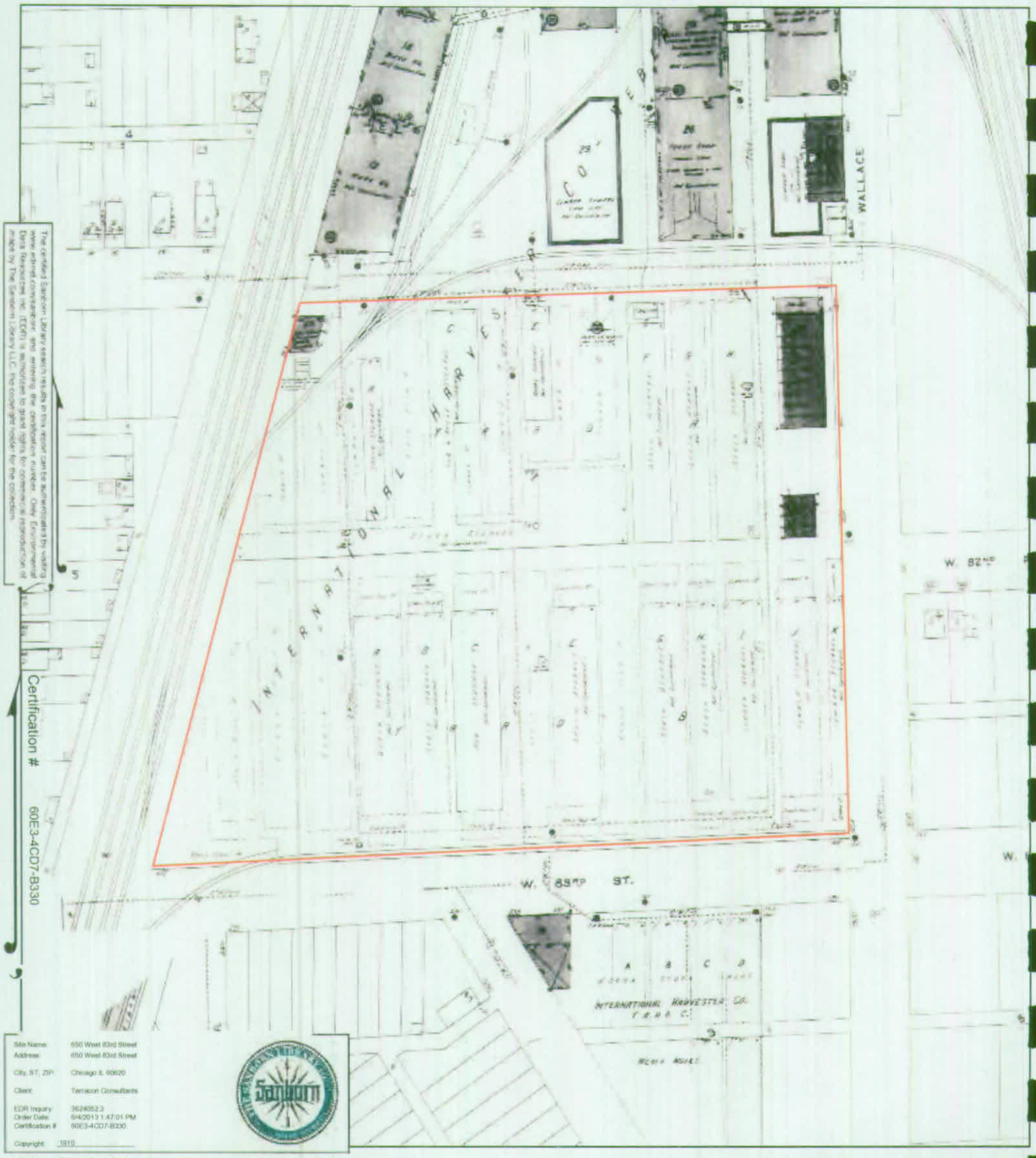

The certified Sanborn Library search results in this report can be authenticated by visiting www.edrnet.com/sanborn and entering the certification number. Only Environmental Data Resources Inc. (EDR) is authorized to grant rights for commercial reproduction of maps by The Sanborn Library LLC, the copyright holder for the collection.

Certification # 60E3-4CD7-B330

Site Name:	650 West 83rd Street
Address:	650 West 83rd Street
City, ST, ZIP:	Chicago IL 60620
Client:	Terracon Consultants
EDR Inquiry:	3624052.3
Order Date:	6/4/2013 1:47:01 PM
Certification #:	60E3-4CD7-B330
Copyright:	1910

This Certified Sanborn Map combines the following sheets.
Outlined areas indicate map sheets within the collection.

Volume E, Sheet 40
Volume E, Sheet 50

0 Feet 150 300 600

N

1897 Certified Sanborn Map

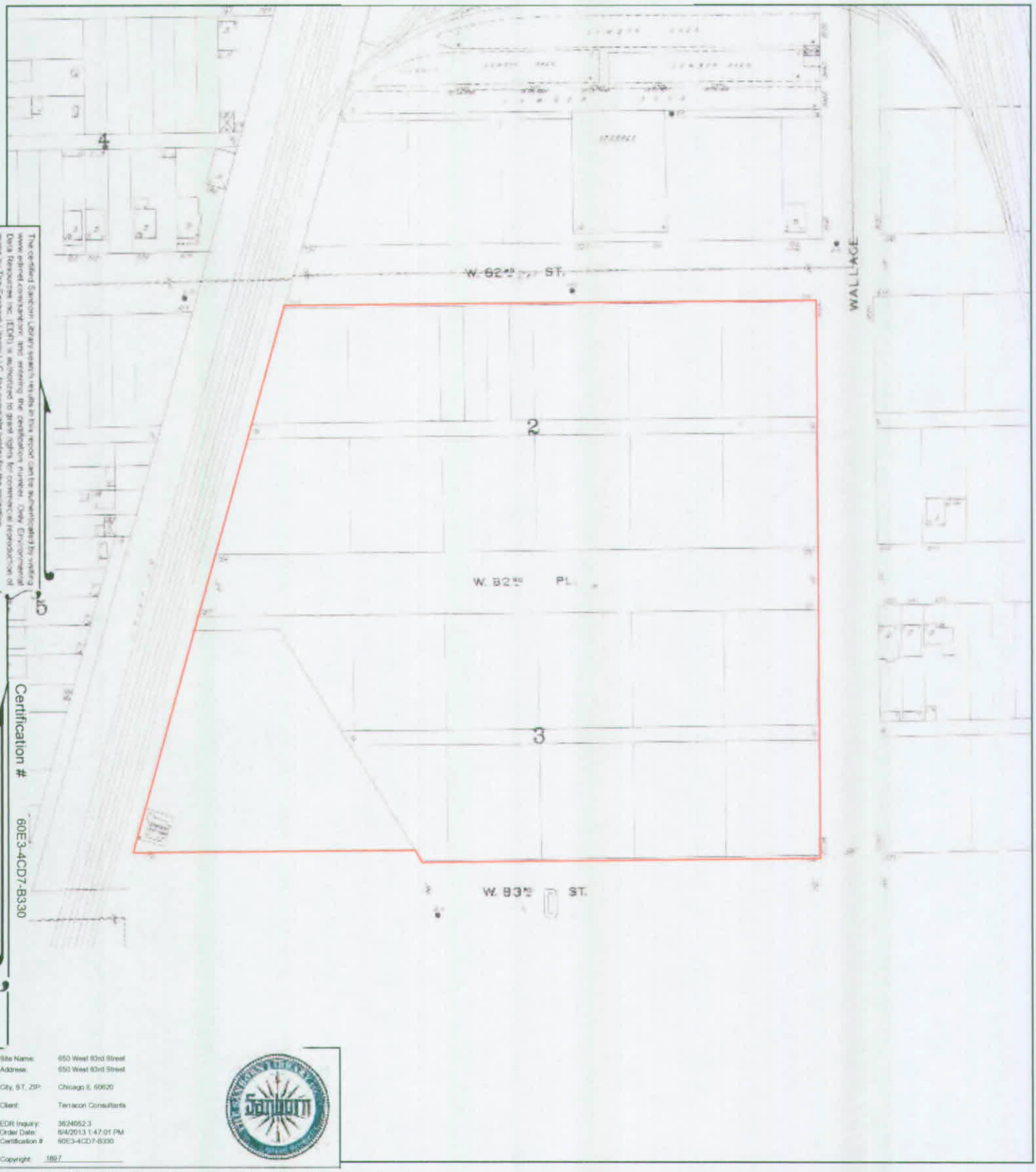

The certified Sanborn Library search results in this report can be authenticated by visiting www.edrnet.com/sanborn and entering the certification number. Only Environmental Data Resources Inc. (EDR) is authorized to grant rights for commercial reproduction of maps by The Sanborn Library LLC, the copyright holder for the collection.

Certification # 60E3-4CD7-B330

Site Name: 650 West 83rd Street
Address: 650 West 83rd Street
City, ST, ZIP: Chicago IL 60620
Client: Terracon Consultants
EDR Inquiry: 3624052.3
Order Date: 6/4/2013 1:47:01 PM
Certification #: 60E3-4CD7-B330

Copyright: 1897

This Certified Sanborn Map combines the following sheets.
Outlined areas indicate map sheets within the collection.

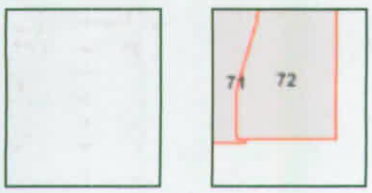

Volume D, Sheet 71
Volume D, Sheet 72

0 Feet 150 300 600

N

APPENDIX D

Regulatory Database Information

Vacant Land On West 83rd Street
650 West 83rd Street
Chicago, IL 60620

Inquiry Number: 4180624.2s
January 13, 2015

The EDR Radius Map™ Report with GeoCheck®

EDR® Environmental Data Resources Inc

6 Armstrong Road, 4th floor
Shelton, CT 06484
Toll Free: 800.352.0050
www.edrnet.com

TABLE OF CONTENTS

SECTION	PAGE
Executive Summary	ES1
Overview Map	2
Detail Map	3
Map Findings Summary	4
Map Findings	8
Orphan Summary	205
Government Records Searched/Data Currency Tracking	GR-1

GEOCHECK ADDENDUM

Physical Setting Source Addendum	A-1
Physical Setting Source Summary	A-2
Physical Setting Source Map	A-7
Physical Setting Source Map Findings	A-8
Physical Setting Source Records Searched	PSGR-1

Thank you for your business.
Please contact EDR at 1-800-352-0050
with any questions or comments.

Disclaimer - Copyright and Trademark Notice

This Report contains certain information obtained from a variety of public and other sources reasonably available to Environmental Data Resources, Inc. It cannot be concluded from this Report that coverage information for the target and surrounding properties does not exist from other sources. **NO WARRANTY EXPRESSED OR IMPLIED, IS MADE WHATSOEVER IN CONNECTION WITH THIS REPORT. ENVIRONMENTAL DATA RESOURCES, INC. SPECIFICALLY DISCLAIMS THE MAKING OF ANY SUCH WARRANTIES, INCLUDING WITHOUT LIMITATION, MERCHANTABILITY OR FITNESS FOR A PARTICULAR USE OR PURPOSE. ALL RISK IS ASSUMED BY THE USER. IN NO EVENT SHALL ENVIRONMENTAL DATA RESOURCES, INC. BE LIABLE TO ANYONE, WHETHER ARISING OUT OF ERRORS OR OMISSIONS, NEGLIGENCE, ACCIDENT OR ANY OTHER CAUSE, FOR ANY LOSS OF DAMAGE, INCLUDING, WITHOUT LIMITATION, SPECIAL, INCIDENTAL, CONSEQUENTIAL, OR EXEMPLARY DAMAGES. ANY LIABILITY ON THE PART OF ENVIRONMENTAL DATA RESOURCES, INC. IS STRICTLY LIMITED TO A REFUND OF THE AMOUNT PAID FOR THIS REPORT.** Purchaser accepts this Report "AS IS". Any analyses, estimates, ratings, environmental risk levels or risk codes provided in this Report are provided for illustrative purposes only, and are not intended to provide, nor should they be interpreted as providing any facts regarding, or prediction or forecast of, any environmental risk for any property. Only a Phase I Environmental Site Assessment performed by an environmental professional can provide information regarding the environmental risk for any property. Additionally, the information provided in this Report is not to be construed as legal advice.

Copyright 2015 by Environmental Data Resources, Inc. All rights reserved. Reproduction in any media or format, in whole or in part, of any report or map of Environmental Data Resources, Inc., or its affiliates, is prohibited without prior written permission.

EDR and its logos (including Sanborn and Sanborn Map) are trademarks of Environmental Data Resources, Inc. or its affiliates. All other trademarks used herein are the property of their respective owners.

EXECUTIVE SUMMARY

A search of available environmental records was conducted by Environmental Data Resources, Inc (EDR). The report was designed to assist parties seeking to meet the search requirements of EPA's Standards and Practices for All Appropriate Inquiries (40 CFR Part 312), the ASTM Standard Practice for Environmental Site Assessments (E 1527-13) or custom requirements developed for the evaluation of environmental risk associated with a parcel of real estate.

TARGET PROPERTY INFORMATION

ADDRESS

650 WEST 83RD STREET
COOK County, IL 60620

COORDINATES

Latitude (North):	41.7444000 - 41° 44' 39.84"
Longitude (West):	87.6403000 - 87° 38' 25.08"
Universal Tranverse Mercator:	Zone 16
UTM X (Meters):	446758.6
UTM Y (Meters):	4621383.0
Elevation:	601 ft. above sea level

USGS TOPOGRAPHIC MAP ASSOCIATED WITH TARGET PROPERTY

Target Property Map:	41087-F6 BLUE ISLAND, IL
Most Recent Revision:	1997
North Map:	41087-G6 ENGLEWOOD, IL
Most Recent Revision:	1997
Northeast Map:	41087-G5 JACKSON PARK, IL IN
Most Recent Revision:	1998
East Map:	41087-F5 LAKE CALUMET, IL IN
Most Recent Revision:	1997

AERIAL PHOTOGRAPHY IN THIS REPORT

Portions of Photo from:	20120619
Source:	USDA

TARGET PROPERTY SEARCH RESULTS

The target property was identified in the following records. For more information on this property see page 8 of the attached EDR Radius Map report:

Site	Database(s)	EPA ID
CHICAGO, CITY OF-DEPT OF FLEET MG 650 W 83RD ST CHICAGO, IL 60620	CHICAGO ENV BOL	N/A
650 W. 83RD ST. 650 W. 83RD ST. CHICAGO, IL	SPILLS	N/A

EXECUTIVE SUMMARY

DATABASES WITH NO MAPPED SITES

No mapped sites were found in EDR's search of available ("reasonably ascertainable ") government records either on the target property or within the search radius around the target property for the following databases:

STANDARD ENVIRONMENTAL RECORDS

Federal NPL site list

NPL ..... National Priority List
Proposed NPL ..... Proposed National Priority List Sites
NPL LIENS ..... Federal Superfund Liens

Federal Delisted NPL site list

Delisted NPL ..... National Priority List Deletions

Federal CERCLIS list

CERCLIS ..... Comprehensive Environmental Response, Compensation, and Liability Information System
FEDERAL FACILITY ..... Federal Facility Site Information listing

Federal CERCLIS NFRAP site List

CERC-NFRAP ..... CERCLIS No Further Remedial Action Planned

Federal RCRA CORRACTS facilities list

CORRACTS ..... Corrective Action Report

Federal RCRA non-CORRACTS TSD facilities list

RCRA-TSDF ..... RCRA - Treatment, Storage and Disposal

Federal institutional controls / engineering controls registries

US ENG CONTROLS ..... Engineering Controls Sites List
US INST CONTROL ..... Sites with Institutional Controls
LUCIS ..... Land Use Control Information System

Federal ERNS list

ERNS ..... Emergency Response Notification System

State- and tribal - equivalent CERCLIS

SSU ..... State Sites Unit Listing

State and tribal landfill and/or solid waste disposal site lists

SWF/LF ..... Available Disposal for Solid Waste in Illinois - Solid Waste Landfills Subject to State Surcharge

LF SPECIAL WASTE..... Special Waste Site List
CCDD..... Clean Construction or Demolition Debris

State and tribal leaking storage tank lists

LUST TRUST..... Underground Storage Tank Fund Payment Priority List
INDIAN LUST..... Leaking Underground Storage Tanks on Indian Land

State and tribal registered storage tank lists

AST..... Above Ground Storage Tanks
INDIAN UST..... Underground Storage Tanks on Indian Land
FEMA UST..... Underground Storage Tank Listing

State and tribal voluntary cleanup sites

INDIAN VCP..... Voluntary Cleanup Priority Listing

State and tribal Brownfields sites

BROWNFIELDS..... Municipal Brownfields Redevelopment Grant Program Project Descriptions

ADDITIONAL ENVIRONMENTAL RECORDS

Local Brownfield lists

US BROWNFIELDS..... A Listing of Brownfields Sites

Local Lists of Landfill / Solid Waste Disposal Sites

DEBRIS REGION 9..... Torres Martinez Reservation Illegal Dump Site Locations
ODL..... Open Dump Inventory
INDIAN ODL..... Report on the Status of Open Dumps on Indian Lands

Local Lists of Hazardous waste / Contaminated Sites

US CDL..... Clandestine Drug Labs
CDL..... Meth Drug Lab Site Listing
US HIST CDL..... National Clandestine Laboratory Register

Local Land Records

LIENS 2..... CERCLA Lien Information

Records of Emergency Release Reports

HMIRS..... Hazardous Materials Information Reporting System
SPILLS 90..... SPILLS 90 data from FirstSearch

Other Ascertainable Records

DOT OPS..... Incident and Accident Data
DOD..... Department of Defense Sites
FUDS..... Formerly Used Defense Sites

EXECUTIVE SUMMARY

CONSENT..... Superfund (CERCLA) Consent Decrees
ROD..... Records Of Decision
UMTRA..... Uranium Mill Tailings Sites
US MINES..... Mines Master Index File
TRIS..... Toxic Chemical Release Inventory System
TSCA..... Toxic Substances Control Act
FTTS..... FIFRA/ TSCA Tracking System - FIFRA (Federal Insecticide, Fungicide, & Rodenticide Act)/TSCA (Toxic Substances Control Act)
HIST FTTS..... FIFRA/TSCA Tracking System Administrative Case Listing
SSTS..... Section 7 Tracking Systems
ICIS..... Integrated Compliance Information System
PADS..... PCB Activity Database System
MLTS..... Material Licensing Tracking System
RADINFO..... Radiation Information Database
FINDS..... Facility Index System/Facility Registry System
RAATS..... RCRA Administrative Action Tracking System
RMP..... Risk Management Plans
UIC..... Underground Injection Wells
NPDES..... A Listing of Active Permits
HWAR..... Hazard Waste Annual Report
DRYCLEANERS..... Illinois Licensed Drycleaners
IMPDMENT..... Surface Impoundment Inventory
AIRS..... Air Inventory Listing
TIER 2..... Tier 2 Information Listing
INDIAN RESERV..... Indian Reservations
SCRD DRYCLEANERS..... State Coalition for Remediation of Drycleaners Listing
PIMW..... Potentially Infectious Medical Waste
PCB TRANSFORMER..... PCB Transformer Registration Database
US FIN ASSUR..... Financial Assurance Information
EPA WATCH LIST..... EPA WATCH LIST
Financial Assurance..... Financial Assurance Information Listing
COAL ASH..... Coal Ash Site Listing
LEAD SMELTERS..... Lead Smelter Sites
US AIRS..... Aerometric Information Retrieval System Facility Subsystem
COAL ASH DOE..... Steam-Electric Plant Operation Data
2020 COR ACTION..... 2020 Corrective Action Program List
PRP..... Potentially Responsible Parties
COAL ASH EPA..... Coal Combustion Residues Surface Impoundments List

EDR HIGH RISK HISTORICAL RECORDS

EDR Exclusive Records

EDR MGP..... EDR Proprietary Manufactured Gas Plants

EDR RECOVERED GOVERNMENT ARCHIVES

Exclusive Recovered Govt. Archives

RGA HWS..... Recovered Government Archive State Hazardous Waste Facilities List
RGA LUST..... Recovered Government Archive Leaking Underground Storage Tank
RGA LF..... Recovered Government Archive Solid Waste Facilities List

SURROUNDING SITES: SEARCH RESULTS

Surrounding sites were identified in the following databases.

EXECUTIVE SUMMARY

Elevations have been determined from the USGS Digital Elevation Model and should be evaluated on a relative (not an absolute) basis. Relative elevation information between sites of close proximity should be field verified. Sites with an elevation equal to or higher than the target property have been differentiated below from sites with an elevation lower than the target property.
Page numbers and map identification numbers refer to the EDR Radius Map report where detailed data on individual sites can be reviewed.

Sites listed in ***bold italics*** are in multiple databases.

Unmappable (orphan) sites are not considered in the foregoing analysis.

STANDARD ENVIRONMENTAL RECORDS

Federal RCRA generators list

RCRA-LQG: RCRAInfo is EPA's comprehensive information system, providing access to data supporting the Resource Conservation and Recovery Act (RCRA) of 1976 and the Hazardous and Solid Waste Amendments (HSWA) of 1984. The database includes selective information on sites which generate, transport, store, treat and/or dispose of hazardous waste as defined by the Resource Conservation and Recovery Act (RCRA). Large quantity generators (LQGs) generate over 1,000 kilograms (kg) of hazardous waste, or over 1 kg of acutely hazardous waste per month.

A review of the RCRA-LQG list, as provided by EDR, and dated 06/10/2014 has revealed that there is 1 RCRA-LQG site within approximately 0.25 miles of the target property.

Lower Elevation	Address	Direction / Distance	Map ID	Page
MEYER INDUSTRIAL CONTAINER	610 W 81ST ST	N 1/8 - 1/4 (0.129 mi.)	I37	33

RCRA-SQG: RCRAInfo is EPA's comprehensive information system, providing access to data supporting the Resource Conservation and Recovery Act (RCRA) of 1976 and the Hazardous and Solid Waste Amendments (HSWA) of 1984. The database includes selective information on sites which generate, transport, store, treat and/or dispose of hazardous waste as defined by the Resource Conservation and Recovery Act (RCRA). Small quantity generators (SQGs) generate between 100 kg and 1,000 kg of hazardous waste per month.

A review of the RCRA-SQG list, as provided by EDR, and dated 06/10/2014 has revealed that there are 2 RCRA-SQG sites within approximately 0.25 miles of the target property.

Equal/Higher Elevation	Address	Direction / Distance	Map ID	Page
BANK OF COMMERCE & IND	***8259 S HALSTED ST***	***WSW 0 - 1/8 (0.094 mi.)***	***G20***	***16***
MORGAN	***8407 S KERFOOT AVE***	***S 1/8 - 1/4 (0.161 mi.)***	***58***	***95***

RCRA-CESQG: RCRAInfo is EPA's comprehensive information system, providing access to data supporting the Resource Conservation and Recovery Act (RCRA) of 1976 and the Hazardous and Solid Waste Amendments (HSWA) of 1984. The database includes selective information on sites which generate, transport, store, treat and/or dispose of hazardous waste as defined by the Resource Conservation and Recovery Act (RCRA). Conditionally exempt small quantity generators (CESQGs) generate less than 100 kg of hazardous waste, or less than 1 kg of acutely hazardous waste per month.

A review of the RCRA-CESQG list, as provided by EDR, and dated 06/10/2014 has revealed that there is 1 RCRA-CESQG site within approximately 0.25 miles of the target property.

Equal/Higher Elevation	Address	Direction / Distance	Map ID	Page
SIMEON VOCATIONAL HIGH SCHOOL	***8235 S VINCENNES AVE***	***E 1/8 - 1/4 (0.170 mi.)***	***P59***	***97***

EXECUTIVE SUMMARY

State and tribal landfill and/or solid waste disposal site lists

IL NIPC: NIPC is an inventory of active and inactive solid waste disposal sites, based on state, local government and historical archive data. Included are numerous sites that previously had never been identified largely because, prior to 1971, there was no obligation to register such sites. The data come from the Northeastern Illinois Planning Commission's Solid Waste Landfill Inventory.

A review of the IL NIPC list, as provided by EDR, and dated 08/01/1988 has revealed that there are 3 IL NIPC sites within approximately 0.5 miles of the target property.

Lower Elevation	Address	Direction / Distance	Map ID	Page
81ST/WALLACE AVE		N 1/8 - 1/4 (0.138 mi.)	I44	87
81ST/VINCENNES AVE		NE 1/8 - 1/4 (0.231 mi.)	U76	104
80TH/EMERALD AVE		NNW 1/4 - 1/2 (0.272 mi.)	Z95	125

State and tribal leaking storage tank lists

LUST: The Leaking Underground Storage Tank Incident Reports contain an inventory of reported leaking underground storage tank incidents. The data come from the Illinois Environmental Protection Agency's LUST Incident Report.

A review of the LUST list, as provided by EDR, and dated 09/25/2014 has revealed that there are 16 LUST sites within approximately 0.5 miles of the target property.

Equal/Higher Elevation	Address	Direction / Distance	Map ID	Page
BANK OF COMMERCE & IND NFA/NFR Letter: 07/10/1995	***8259 S HALSTED ST***	***WSW 0 - 1/8 (0.094 mi.)***	***G20***	***16***
95 HALSTEAD, INC. NFA/NFR Letter: 08/23/1999	8420 SOUTH HALSTED	SW 1/8 - 1/4 (0.197 mi.)	R69	102
CHICAGO, CITY OF	8501 SOUTH GREEN STREET	SW 1/4 - 1/2 (0.309 mi.)	AA98	127
FORMER SERVICE STATION	***8654 SOUTH VINCENNES AV***	***SSW 1/4 - 1/2 (0.411 mi.)***	***132***	***181***

Lower Elevation	Address	Direction / Distance	Map ID	Page
SMALL BUSINESS ADMIN. NFA/NFR Letter: 01/26/2010	8201 SOUTH WALLACE	NNE 0 - 1/8 (0.053 mi.)	12	11
TOUMAH, YASSER	8158 SOUTH HALSTED ST.	WNW 1/8 - 1/4 (0.149 mi.)	O52	89
NAOMI & SYLVESTER SMITH SENIOR	8045 SOUTH HALSTED	NW 1/8 - 1/4 (0.237 mi.)	V78	105
CARDELL WESTINGHOUSE	8400 SOUTH STUART	ESE 1/4 - 1/2 (0.287 mi.)	96	125
W2005 CMK REALTY L.L.C. NFA/NFR Letter: 09/11/2008	***8301 SOUTH STEWART***	***E 1/4 - 1/2 (0.346 mi.)***	***AB105***	***130***
KEMMERER BOTTLING NFA/NFR Letter: 10/06/1993	300 WEST 83RD STREET	E 1/4 - 1/2 (0.362 mi.)	AB108	169
PRINCETON & SMITH, INC. NFA/NFR Letter: 03/05/2013	***8233 SOUTH PRINCETON AV***	***E 1/4 - 1/2 (0.381 mi.)***	***124***	***176***
AUBURN LAKES VENTURE	***7851 NORMAL ST.***	***NNE 1/4 - 1/2 (0.412 mi.)***	***AK133***	***184***
HILL, JOHN NFA/NFR Letter: 03/21/1997	7936 SOUTH VINCENNES	NE 1/4 - 1/2 (0.413 mi.)	AM136	185
CHICAGO, CITY OF NFA/NFR Letter: 04/28/2000	825 WEST 79TH ST.	NNW 1/4 - 1/2 (0.420 mi.)	AI142	188
250 WEST 83RD LLC NFA/NFR Letter: 07/14/2011	***250 WEST 83RD STREET***	***E 1/4 - 1/2 (0.432 mi.)***	***AJ155***	***195***

Lower Elevation	Address	Direction / Distance	Map ID	Page
MID AMERICAL INVESTMENT	838-840 WEST 79TH ST.	NW 1/4 - 1/2 (0.472 mi.)	AO169	201

State and tribal registered storage tank lists

UST: The Underground Storage Tank database contains registered USTs. USTs are regulated under Subtitle I of the Resource Conservation and Recovery Act (RCRA). The data come from the Illinois State Fire Marshal's STC Facility List.

A review of the UST list, as provided by EDR, and dated 10/27/2014 has revealed that there are 5 UST sites within approximately 0.25 miles of the target property.

Equal/Higher Elevation	Address	Direction / Distance	Map ID	Page
FALCON #3	8255 SOUTH HALSTED	WSW 0 - 1/8 (0.084 mi.)	G17	13
BOB AUTO REPAIR	8259 S HALSTED ST	WSW 0 - 1/8 (0.094 mi.)	G21	18
SIMEON SCHOOL	8233 S VINCENNES	E 1/8 - 1/4 (0.170 mi.)	P60	98
Lower Elevation	**Address**	**Direction / Distance**	**Map ID**	**Page**
AMM MARATHON, INC.	8158 S. HALSTED	WNW 1/8 - 1/4 (0.149 mi.)	O54	91
WITHERSPOON HENRY	8054-58 S HALSTED	NW 1/8 - 1/4 (0.229 mi.)	V75	104

State and tribal institutional control / engineering control registries

ENG CONTROLS: Sites with Engineering Controls.

A review of the ENG CONTROLS list, as provided by EDR, and dated 08/29/2014 has revealed that there are 4 ENG CONTROLS sites within approximately 0.5 miles of the target property.

Equal/Higher Elevation	Address	Direction / Distance	Map ID	Page
SIMEON CAREER ACADEMY PARKING	*8221 SOUTH VINCENNES AV*	*E 1/8 - 1/4 (0.173 mi.)*	*N62*	*99*
Lower Elevation	**Address**	**Direction / Distance**	**Map ID**	**Page**
W2005 CMK REALTY L.L.C.	*8301 SOUTH STEWART*	*E 1/4 - 1/2 (0.346 mi.)*	*AB105*	*130*
PRINCETON & SMITH, INC.	*8233 SOUTH PRINCETON AV*	*E 1/4 - 1/2 (0.381 mi.)*	*124*	*176*
250 WEST 83RD LLC	*250 WEST 83RD STREET*	*E 1/4 - 1/2 (0.432 mi.)*	*AJ155*	*195*

INST CONTROL: Legal or administrative restrictions on land use and/or other activities (e.g., groundwater use restrictions) which effectively limit exposure to contamination may be employed as alternatives to removal or treatment of contamination.

A review of the INST CONTROL list, as provided by EDR, and dated 08/29/2014 has revealed that there are 3 INST CONTROL sites within approximately 0.5 miles of the target property.

Lower Elevation	Address	Direction / Distance	Map ID	Page
W2005 CMK REALTY L.L.C.	*8301 SOUTH STEWART*	*E 1/4 - 1/2 (0.346 mi.)*	*AB105*	*130*
PRINCETON & SMITH, INC.	*8233 SOUTH PRINCETON AV*	*E 1/4 - 1/2 (0.381 mi.)*	*124*	*176*
250 WEST 83RD LLC	*250 WEST 83RD STREET*	*E 1/4 - 1/2 (0.432 mi.)*	*AJ155*	*195*

EXECUTIVE SUMMARY

State and tribal voluntary cleanup sites

SRP: Illinois Environmental Protection Agency, Site Remediation Program Database

A review of the SRP list, as provided by EDR, and dated 08/29/2014 has revealed that there are 6 SRP sites within approximately 0.5 miles of the target property.

Equal/Higher Elevation	Address	Direction / Distance	Map ID	Page
SIMEON CAREER ACADEMY PARKING	***8221 SOUTH VINCENNES AV***	***E 1/8 - 1/4 (0.173 mi.)***	***N62***	***99***
Lower Elevation	**Address**	**Direction / Distance**	**Map ID**	**Page**
SIMEON VOCATIONAL HIGH SCHOOL	8101 SOUTH VINCENNES AV	NE 1/8 - 1/4 (0.243 mi.)	U83	107
NEW PISGAH BAPTIST CHURCH	8019-8047 SOUTH HALSTED	NW 1/4 - 1/2 (0.263 mi.)	V91	123
W2005 CMK REALTY L.L.C.	***8301 SOUTH STEWART***	***E 1/4 - 1/2 (0.346 mi.)***	***AB105***	***130***
PRINCETON & SMITH, INC.	***8233 SOUTH PRINCETON AV***	***E 1/4 - 1/2 (0.381 mi.)***	***124***	***176***
250 WEST 83RD LLC	***250 WEST 83RD STREET***	***E 1/4 - 1/2 (0.432 mi.)***	***AJ155***	***195***

ADDITIONAL ENVIRONMENTAL RECORDS

Other Ascertainable Records

RCRA NonGen / NLR: RCRAInfo is EPA's comprehensive information system, providing access to data supporting the Resource Conservation and Recovery Act (RCRA) of 1976 and the Hazardous and Solid Waste Amendments (HSWA) of 1984. The database includes selective information on sites which generate, transport, store, treat and/or dispose of hazardous waste as defined by the Resource Conservation and Recovery Act (RCRA). Non-Generators do not presently generate hazardous waste.

A review of the RCRA NonGen / NLR list, as provided by EDR, and dated 06/10/2014 has revealed that there are 2 RCRA NonGen / NLR sites within approximately 0.25 miles of the target property.

Lower Elevation	Address	Direction / Distance	Map ID	Page
HANSEN-STERLING DRUM CO	***8101 S WALLACE ST***	***NNE 0 - 1/8 (0.117 mi.)***	***J33***	***25***
NATIONAL CASEIN CO INC	***601 W 80TH ST***	***N 1/8 - 1/4 (0.246 mi.)***	***W85***	***117***

CHICAGO ENV: This dataset serves as a lookup table to determine if environmental records exist in a Chicago Department of Public Health (CDPH) environmental dataset for a given address. COMPLAINTS: A 'Y? indicates that one or more records exist in the CDPH Environmental Complaints dataset. NESHAPS & DEMOLITON NOTICES: A 'Y? indicates that one or more records exist in the CDPH Asbestos and Demolition Notification dataset. ENFORCEMENT: A 'Y? indicates that one or more records exist in the CDPH Environmental Enforcement dataset. INSPECTIONS: A 'Y? indicates that one or more records exist in the CDPH Environmental Inspections dataset. PERMITS: A 'Y? indicates that one or more records exist in the CDPH Environmental Permits dataset. TANKS: A 'Y? indicates that one or more records exist in the CDPH Storage Tanks dataset.

A review of the CHICAGO ENV list, as provided by EDR, and dated 10/30/2014 has revealed that there are 111 CHICAGO ENV sites within approximately 0.5 miles of the target property.

Equal/Higher Elevation	Address	Direction / Distance	Map ID	Page
Not reported	712 W 83RD ST	SW 0 - 1/8 (0.009 mi.)	D6	9
Not reported	740 W 83RD ST	SW 0 - 1/8 (0.018 mi.)	D8	10
Not reported	717 W 83RD ST	SW 0 - 1/8 (0.019 mi.)	D9	10

EXECUTIVE SUMMARY

Equal/Higher Elevation	Address	Direction / Distance	Map ID	Page
Not reported	717 W 82ND ST	WNW 0 - 1/8 (0.049 mi.)	E11	11
Not reported	700 W 81ST PL	NW 0 - 1/8 (0.073 mi.)	F14	12
Not reported	706 W 81ST PL	NW 0 - 1/8 (0.074 mi.)	F15	13
VACANT LOT	***631 W 81ST ST***	***N 0 - 1/8 (0.117 mi.)***	***I29***	***24***
Not reported	633 W 81ST ST	N 0 - 1/8 (0.117 mi.)	I30	24
Not reported	629 W 81ST ST	N 0 - 1/8 (0.117 mi.)	I31	25
Not reported	659 W 81ST ST	N 0 - 1/8 (0.117 mi.)	I32	25
Not reported	516 W 81ST PL	ENE 1/8 - 1/4 (0.135 mi.)	M43	87
CARC SVC	***501 W 82ND ST***	***ENE 1/8 - 1/4 (0.138 mi.)***	***N45***	***87***
Not reported	508 W 81ST PL	ENE 1/8 - 1/4 (0.139 mi.)	M46	88
Not reported	502 W 81ST PL	ENE 1/8 - 1/4 (0.142 mi.)	M48	88
Not reported	500 W 81ST PL	ENE 1/8 - 1/4 (0.143 mi.)	M50	89
Not reported	452 W 82ND ST	ENE 1/8 - 1/4 (0.154 mi.)	N57	95
Not reported	806 W 84TH ST	SW 1/8 - 1/4 (0.175 mi.)	R63	100
Not reported	631 W 80TH ST	N 1/8 - 1/4 (0.249 mi.)	X86	121
Not reported	539 W 80TH ST	NNE 1/4 - 1/2 (0.255 mi.)	Y88	122
Not reported	537 W 80TH ST	NNE 1/4 - 1/2 (0.255 mi.)	Y89	122
Not reported	906 W 85TH ST	SW 1/4 - 1/2 (0.352 mi.)	107	169
Not reported	705 W 79TH ST	N 1/4 - 1/2 (0.375 mi.)	AE112	172
Not reported	649 W 79TH ST	N 1/4 - 1/2 (0.376 mi.)	AF113	172
Not reported	646 W 79TH ST	N 1/4 - 1/2 (0.378 mi.)	AF116	173
Not reported	851 W 86TH ST	SSW 1/4 - 1/2 (0.421 mi.)	143	189
Not reported	8223 S ABERDEEN ST	W 1/4 - 1/2 (0.484 mi.)	170	202
Not reported	849 W 86TH PL	SSW 1/4 - 1/2 (0.489 mi.)	AP171	202
Not reported	860 W 86TH PL	SSW 1/4 - 1/2 (0.490 mi.)	AP172	202

Lower Elevation	Address	Direction / Distance	Map ID	Page
Not reported	661 W 83RD ST	SSW 0 - 1/8 (0.006 mi.)	B3	8
Not reported	639 W 83RD ST	SSE 0 - 1/8 (0.007 mi.)	C4	9
Not reported	653 W 83RD ST	SSW 0 - 1/8 (0.007 mi.)	B5	9
Not reported	541 W 83RD ST	SE 0 - 1/8 (0.032 mi.)	C10	11
Not reported	736 W 82ND ST	WNW 0 - 1/8 (0.078 mi.)	E16	13
AWMCO INC	***601 W 81ST ST***	***NNE 0 - 1/8 (0.118 mi.)***	***J34***	***30***
Not reported	***610 W 81ST ST***	***N 1/8 - 1/4 (0.129 mi.)***	***I38***	***40***
Not reported	719 W 81ST ST	NNW 1/8 - 1/4 (0.131 mi.)	L40	85
Not reported	720 W 81ST ST	NNW 1/8 - 1/4 (0.135 mi.)	L42	86
Not reported	724 W 81ST ST	NNW 1/8 - 1/4 (0.140 mi.)	L47	88
Not reported	741 W 81ST ST	NW 1/8 - 1/4 (0.151 mi.)	L56	95
Not reported	509 W 81ST ST	NE 1/8 - 1/4 (0.173 mi.)	Q61	99
Not reported	506 W 81ST ST	NE 1/8 - 1/4 (0.175 mi.)	Q64	101
Not reported	801 W 81ST ST	NW 1/8 - 1/4 (0.186 mi.)	S68	102
Not reported	433 W 83RD ST	E 1/8 - 1/4 (0.203 mi.)	71	103
Not reported	443 W 81ST ST	NE 1/8 - 1/4 (0.222 mi.)	U73	103
NATIONAL CASEIN CO	***601 W 80TH ST***	***N 1/8 - 1/4 (0.246 mi.)***	***W84***	***107***
Not reported	648 W 80TH ST	N 1/4 - 1/2 (0.251 mi.)	X87	121
Not reported	736 W 80TH ST	NNW 1/4 - 1/2 (0.263 mi.)	Z90	122
Not reported	738 W 80TH ST	NNW 1/4 - 1/2 (0.264 mi.)	Z92	124
Not reported	540 W 85TH ST	SSE 1/4 - 1/2 (0.271 mi.)	93	125
Not reported	511 W 80TH ST	NNE 1/4 - 1/2 (0.271 mi.)	Y94	125
CITY OF CHICAGO	***819 W 85TH ST***	***SW 1/4 - 1/2 (0.297 mi.)***	***AA97***	***126***
Not reported	342 W 83RD ST	E 1/4 - 1/2 (0.312 mi.)	AB99	128
Not reported	340 W 83RD ST	E 1/4 - 1/2 (0.315 mi.)	AB100	128
Not reported	442 W 80TH ST	NE 1/4 - 1/2 (0.317 mi.)	AC101	128
Not reported	430 W 80TH ST	NE 1/4 - 1/2 (0.325 mi.)	AC102	129
Not reported	320 W 83RD ST	E 1/4 - 1/2 (0.338 mi.)	AB103	129

EXECUTIVE SUMMARY

Lower Elevation	Address	Direction / Distance	Map ID	Page
Not reported	323 W 83RD ST	E 1/4 - 1/2 (0.345 mi.)	AB104	129
Not reported	409 W 80TH ST	NE 1/4 - 1/2 (0.347 mi.)	AC106	168
KEMMERER BOTTLING CO	***300 W 83RD ST***	***E 1/4 - 1/2 (0.362 mi.)***	***AB109***	***169***
VACANT LOT	***442 W 79TH ST***	***NE 1/4 - 1/2 (0.364 mi.)***	***AD110***	***171***
Not reported	438 W 79TH PL	NE 1/4 - 1/2 (0.366 mi.)	AD111	172
Not reported	419 W 79TH PL	NE 1/4 - 1/2 (0.377 mi.)	AD114	173
Not reported	615 W 79TH ST	N 1/4 - 1/2 (0.378 mi.)	115	173
Not reported	723 W 79TH ST	NNW 1/4 - 1/2 (0.379 mi.)	AE117	174
Not reported	632 W 79TH ST	N 1/4 - 1/2 (0.379 mi.)	AF118	174
Not reported	624 W 79TH ST	N 1/4 - 1/2 (0.379 mi.)	AF119	174
Not reported	614 W 79TH ST	N 1/4 - 1/2 (0.380 mi.)	AF120	175
Not reported	549 W 79TH ST	NNE 1/4 - 1/2 (0.380 mi.)	AG121	175
Not reported	416 W 79TH PL	NE 1/4 - 1/2 (0.380 mi.)	AD122	175
Not reported	533 W 79TH ST	NNE 1/4 - 1/2 (0.381 mi.)	AG123	176
Not reported	734 W 79TH ST	NNW 1/4 - 1/2 (0.384 mi.)	AH125	179
Not reported	747 W 79TH ST	NNW 1/4 - 1/2 (0.385 mi.)	AH126	179
Not reported	750 W 79TH ST	NNW 1/4 - 1/2 (0.388 mi.)	AH127	179
Not reported	801 W 79TH ST	NNW 1/4 - 1/2 (0.402 mi.)	AI128	180
Not reported	800 W 79TH ST	NNW 1/4 - 1/2 (0.403 mi.)	AI129	180
Not reported	270 W 83RD ST	E 1/4 - 1/2 (0.405 mi.)	AJ130	180
Not reported	475 W 79TH ST	NNE 1/4 - 1/2 (0.407 mi.)	AK131	181
Not reported	425 W 79TH ST	NNE 1/4 - 1/2 (0.413 mi.)	AL134	185
Not reported	811 W 79TH ST	NNW 1/4 - 1/2 (0.413 mi.)	AI135	185
Not reported	813 W 79TH ST	NNW 1/4 - 1/2 (0.414 mi.)	AI137	186
Not reported	812 W 79TH ST	NNW 1/4 - 1/2 (0.416 mi.)	AI138	186
Not reported	445 W 79TH ST	NNE 1/4 - 1/2 (0.417 mi.)	AK139	186
Not reported	821 W 79TH ST	NNW 1/4 - 1/2 (0.418 mi.)	AI140	187
CHICAGO, CITY OF	***825 W 79TH ST***	***NNW 1/4 - 1/2 (0.420 mi.)***	***AI141***	***187***
Not reported	820 W 79TH ST	NNW 1/4 - 1/2 (0.421 mi.)	AI144	189
Not reported	822 W 79TH ST	NNW 1/4 - 1/2 (0.423 mi.)	AI145	189
Not reported	833 W 79TH ST	NNW 1/4 - 1/2 (0.424 mi.)	AN146	190
Not reported	837 W 79TH ST	NNW 1/4 - 1/2 (0.426 mi.)	AN147	190
839 WEST 79TH STREET BUILDING	***839 W 79TH ST***	***NNW 1/4 - 1/2 (0.428 mi.)***	***AN148***	***190***
Not reported	832 W 79TH ST	NNW 1/4 - 1/2 (0.429 mi.)	AN149	191
Not reported	834 W 79TH ST	NNW 1/4 - 1/2 (0.430 mi.)	AN150	191
Not reported	836 W 79TH ST	NNW 1/4 - 1/2 (0.431 mi.)	AN151	191
Not reported	424 W 79TH ST	NNE 1/4 - 1/2 (0.431 mi.)	AL152	192
Not reported	838 W 79TH ST	NNW 1/4 - 1/2 (0.432 mi.)	AN153	192
AMERICAN DEMOLITION CORP	***250 W 83RD***	***E 1/4 - 1/2 (0.432 mi.)***	***AJ154***	***192***
Not reported	840 W 79TH ST	NNW 1/4 - 1/2 (0.433 mi.)	AN156	197
Not reported	422 W 79TH ST	NNE 1/4 - 1/2 (0.433 mi.)	AL157	197
Not reported	842 W 79TH ST	NNW 1/4 - 1/2 (0.434 mi.)	AN158	198
Not reported	420 W 79TH ST	NNE 1/4 - 1/2 (0.435 mi.)	AL159	198
Not reported	855 W 79TH ST	NNW 1/4 - 1/2 (0.436 mi.)	AN160	198
Not reported	846 W 79TH ST	NNW 1/4 - 1/2 (0.436 mi.)	AN161	199
Not reported	310 W 80TH ST	NE 1/4 - 1/2 (0.437 mi.)	162	199
Not reported	850 W 79TH ST	NNW 1/4 - 1/2 (0.437 mi.)	AN163	199
Not reported	856 W 79TH ST	NNW 1/4 - 1/2 (0.440 mi.)	AN164	200
Not reported	235 W 83RD ST	E 1/4 - 1/2 (0.449 mi.)	AJ165	200
Not reported	233 W 83RD ST	E 1/4 - 1/2 (0.452 mi.)	AJ166	200
Not reported	400 W 79TH ST	NE 1/4 - 1/2 (0.455 mi.)	AM167	201
Not reported	900 W 79TH ST	NW 1/4 - 1/2 (0.463 mi.)	AO168	201
Not reported	201 W 83RD ST	E 1/4 - 1/2 (0.493 mi.)	173	203
Not reported	656 W 87TH ST	S 1/4 - 1/2 (0.494 mi.)	174	203
Not reported	935 W 79TH ST	NW 1/4 - 1/2 (0.497 mi.)	175	203

EXECUTIVE SUMMARY

EDR HIGH RISK HISTORICAL RECORDS

EDR Exclusive Records

EDR US Hist Auto Stat: EDR has searched selected national collections of business directories and has collected listings of potential gas station/filling station/service station sites that were available to EDR researchers. EDR's review was limited to those categories of sources that might, in EDR's opinion, include gas station/filling station/service station establishments. The categories reviewed included, but were not limited to gas, gas station, gasoline station, filling station, auto, automobile repair, auto service station, service station, etc. This database falls within a category of information EDR classifies as "High Risk Historical Records", or HRHR. EDR's HRHR effort presents unique and sometimes proprietary data about past sites and operations that typically create environmental concerns, but may not show up in current government records searches.

A review of the EDR US Hist Auto Stat list, as provided by EDR, has revealed that there are 25 EDR US Hist Auto Stat sites within approximately 0.25 miles of the target property.

Equal/Higher Elevation	Address	Direction / Distance	Map ID	Page
WILSON FIELDS AUTO REPAIR SH	744 W 83D	SW 0 - 1/8 (0.018 mi.)	D7	10
Not reported	8255 S HALSTED ST	WSW 0 - 1/8 (0.084 mi.)	G18	15
HECKLER GEO H	8318 S HALSTED	WSW 0 - 1/8 (0.102 mi.)	H23	21
Not reported	8257 S HALSTED ST	W 0 - 1/8 (0.110 mi.)	G27	23
Not reported	8344 S HALSTED ST	SW 0 - 1/8 (0.123 mi.)	H35	32
Not reported	8408 S HALSTED ST	SW 1/8 - 1/4 (0.181 mi.)	R67	101
M D AUTO REPAIR SHOP	8426 S HALSTED	SW 1/8 - 1/4 (0.205 mi.)	T72	103
OLSEN AUTO REPAIR SHOP	8423 GILBERT CT	SSW 1/8 - 1/4 (0.224 mi.)	74	104
Not reported	8431 S HALSTED ST	SSW 1/8 - 1/4 (0.242 mi.)	T82	106

Lower Elevation	Address	Direction / Distance	Map ID	Page
PUTMAN BROS	8256 58 EMERALD AV	WSW 0 - 1/8 (0.055 mi.)	D13	12
PAT S CAR CARE CENTER	8301 S HALSTED ST	WSW 0 - 1/8 (0.087 mi.)	G19	15
Not reported	8300 S HALSTED ST	WSW 0 - 1/8 (0.103 mi.)	G24	21
Not reported	8312 S HALSTED ST	WSW 0 - 1/8 (0.106 mi.)	H25	22
Not reported	8310 S HALSTED ST	WSW 0 - 1/8 (0.107 mi.)	G26	23
TEXACO PETROLEUM PRODUCTS J LE	8200 S HALSTED PKWY	WNW 1/8 - 1/4 (0.126 mi.)	K36	32
Not reported	8204 S HALSTED ST	WNW 1/8 - 1/4 (0.130 mi.)	K39	85
TEXACO PETROLEUM PRODUCTS HICK	8200 S HALSTED	WNW 1/8 - 1/4 (0.132 mi.)	K41	85
AUBURN PARK FILLING STATION	8155 S HALSTED	WNW 1/8 - 1/4 (0.143 mi.)	O49	89
AUBURN AUTO REPAIR CO	8147 S HALSTED	WNW 1/8 - 1/4 (0.147 mi.)	O51	89
Not reported	8158 S HALSTED ST	WNW 1/8 - 1/4 (0.149 mi.)	O53	90
GREER S STANDARD SERVICE STA	8100 S HALSTED PKWY	NW 1/8 - 1/4 (0.179 mi.)	S66	101
SOUTH SIDE AUTO SHOP	8045 EMERALD AV	NNW 1/8 - 1/4 (0.203 mi.)	70	102
SCHOLL CHAS SON	8043 S HALSTED	NW 1/8 - 1/4 (0.234 mi.)	V77	105
HABLAS FREDK	8100 VINCENNES AV	NE 1/8 - 1/4 (0.240 mi.)	U80	106
GARDIN ANTONIO	8454 VINCENNES AV	S 1/8 - 1/4 (0.241 mi.)	81	106

EDR US Hist Cleaners: EDR has searched selected national collections of business directories and has collected listings of potential dry cleaner sites that were available to EDR researchers. EDR's review was limited to those categories of sources that might, in EDR's opinion, include dry cleaning establishments. The categories reviewed included, but were not limited to dry cleaners, cleaners, laundry, laundromat, cleaning/laundry, wash & dry etc. This database falls within a category of information EDR classifies as "High Risk Historical

Records", or HRHR. EDR's HRHR effort presents unique and sometimes proprietary data about past sites and operations that typically create environmental concerns, but may not show up in current government records searches.

A review of the EDR US Hist Cleaners list, as provided by EDR, has revealed that there are 5 EDR US Hist Cleaners sites within approximately 0.25 miles of the target property.

Equal/Higher Elevation	Address	Direction / Distance	Map ID	Page
CHICAGO DROP CLOTH SERVICE AND	8241 S HALSTED PKWY	W 0 - 1/8 (0.111 mi.)	G28	24
ANATOL RUG AND CARPET CLEANERS	8008 S WALLACE AVE	NNE 1/8 - 1/4 (0.239 mi.)	W79	105

Lower Elevation	Address	Direction / Distance	Map ID	Page
Not reported	8301 S HALSTED ST	WSW 0 - 1/8 (0.101 mi.)	G22	21
Not reported	8156 S HALSTED ST	WNW 1/8 - 1/4 (0.150 mi.)	O55	94
ENGLEWOOD CLNRS	8104 S HALSTED	NW 1/8 - 1/4 (0.176 mi.)	S65	101

EXECUTIVE SUMMARY

Due to poor or inadequate address information, the following sites were not mapped. Count: 2 records.

Site Name	Database(s)
76TH AND PARNELL	CERC-NFRAP
HUYNH, NAM	LUST

OVERVIEW MAP - 4180624.2S

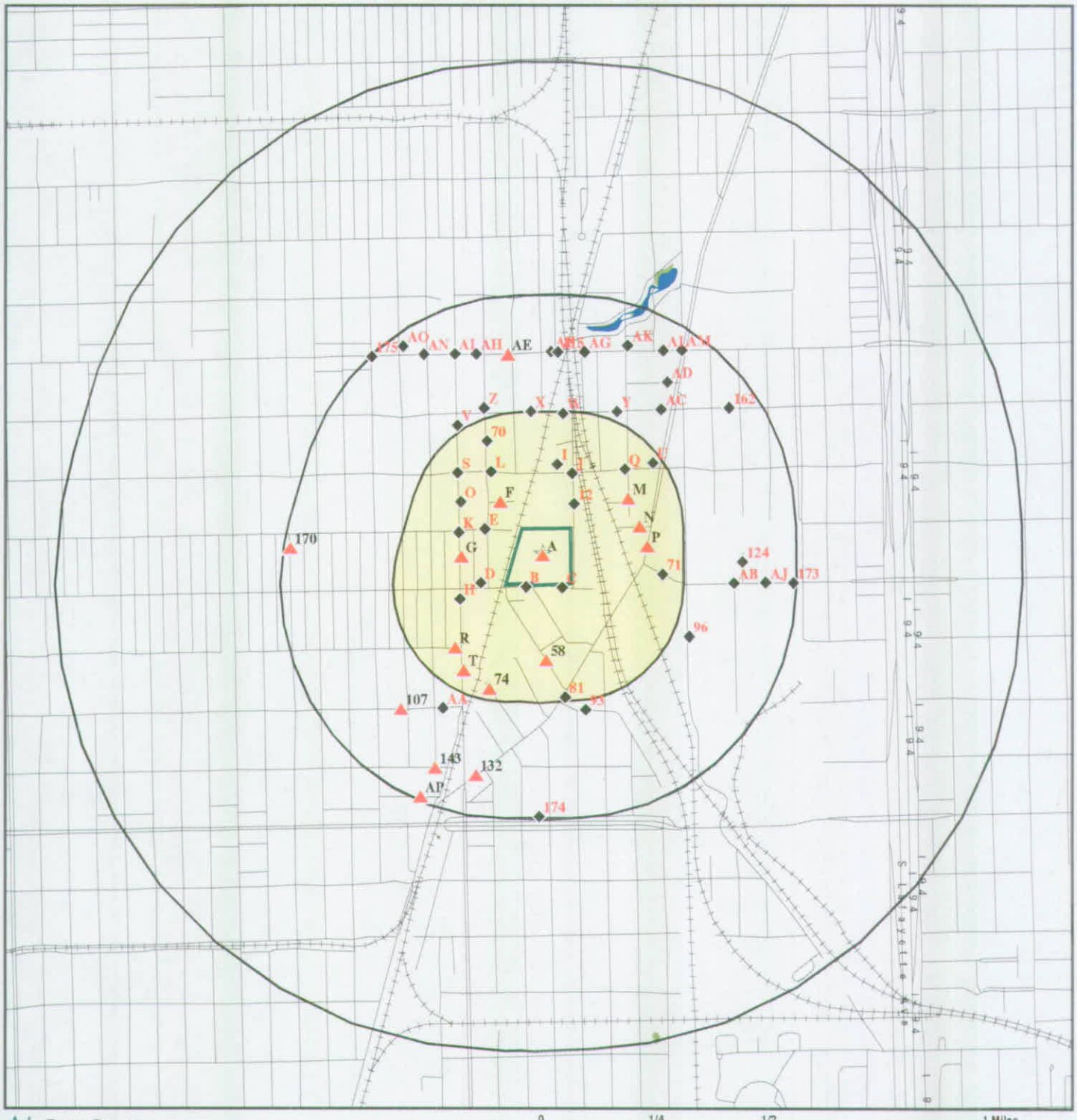

- Target Property
- Sites at elevations higher than or equal to the target property
- Sites at elevations lower than the target property
- Manufactured Gas Plants
- National Priority List Sites
- Dept. Defense Sites
- Indian Reservations BIA
- Oil & Gas pipelines from USGS
- 100-year flood zone
- 500-year flood zone
- National Wetland Inventory

This report includes Interactive Map Layers to display and/or hide map information. The legend includes only those icons for the default map view.

SITE NAME: Vacant Land On West 83rd Street ADDRESS: 650 West 83rd Street Chicago IL 60620 LAT/LONG: 41.7444 / 87.6403	CLIENT: Terracon, Inc. CONTACT: Lauren Trzaskus INQUIRY #: 4180624.2s DATE: January 13, 2015 2:59 pm

Copyright © 2015 EDR, Inc. © 2010 Tele Atlas Rel. 07/2009.

DETAIL MAP - 4180624.2S

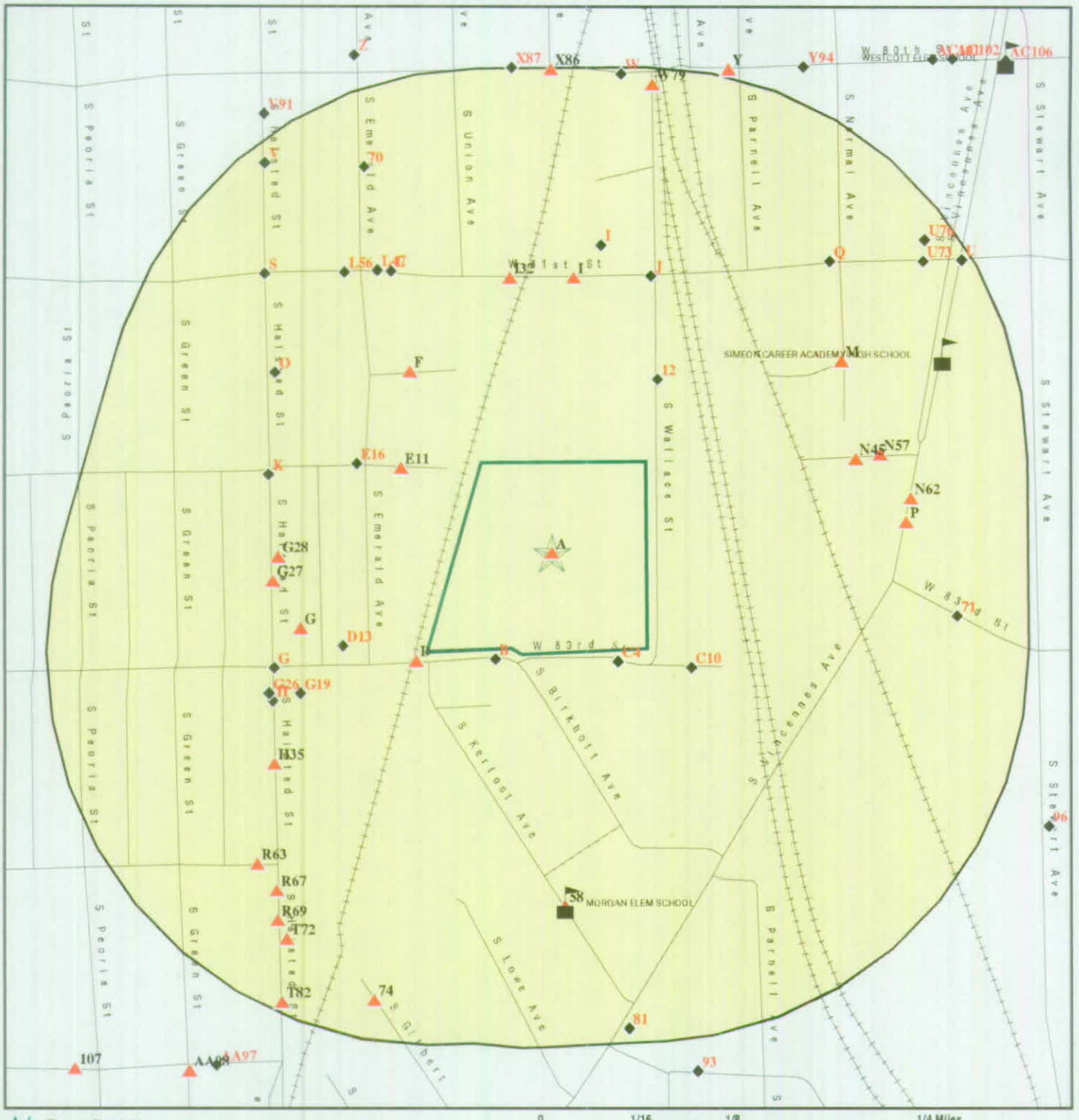

- Target Property
- Sites at elevations higher than or equal to the target property
- Sites at elevations lower than the target property
- Manufactured Gas Plants
- Sensitive Receptors
- National Priority List Sites
- Dept. Defense Sites
- Indian Reservations BIA
- Oil & Gas pipelines from USGS
- 100-year flood zone
- 500-year flood zone

This report includes Interactive Map Layers to display and/or hide map information. The legend includes only those icons for the default map view.

SITE NAME: Vacant Land On West 83rd Street ADDRESS: 650 West 83rd Street Chicago IL 60620 LAT/LONG: 41.7444 / 87.6403	CLIENT: Terracon, Inc. CONTACT: Lauren Trzaskus INQUIRY #: 4180624.2s DATE: January 13, 2015 3:01 pm

Copyright © 2015 EDR, Inc. © 2010 Tele Atlas Rel. 07/2009.

MAP FINDINGS SUMMARY

Database	Search Distance (Miles)	Target Property	< 1/8	1/8 - 1/4	1/4 - 1/2	1/2 - 1	> 1	Total Plotted
STANDARD ENVIRONMENTAL RECORDS								
Federal NPL site list								
NPL	1.000		0	0	0	0	NR	0
Proposed NPL	1.000		0	0	0	0	NR	0
NPL LIENS	TP		NR	NR	NR	NR	NR	0
Federal Delisted NPL site list								
Delisted NPL	1.000		0	0	0	0	NR	0
Federal CERCLIS list								
CERCLIS	0.500		0	0	0	NR	NR	0
FEDERAL FACILITY	0.500		0	0	0	NR	NR	0
Federal CERCLIS NFRAP site List								
CERC-NFRAP	0.500		0	0	0	NR	NR	0
Federal RCRA CORRACTS facilities list								
CORRACTS	1.000		0	0	0	0	NR	0
Federal RCRA non-CORRACTS TSD facilities list								
RCRA-TSDF	0.500		0	0	0	NR	NR	0
Federal RCRA generators list								
RCRA-LQG	0.250		0	1	NR	NR	NR	1
RCRA-SQG	0.250		1	1	NR	NR	NR	2
RCRA-CESQG	0.250		0	1	NR	NR	NR	1
Federal institutional controls / engineering controls registries								
US ENG CONTROLS	0.500		0	0	0	NR	NR	0
US INST CONTROL	0.500		0	0	0	NR	NR	0
LUCIS	0.500		0	0	0	NR	NR	0
Federal ERNS list								
ERNS	TP		NR	NR	NR	NR	NR	0
State- and tribal - equivalent CERCLIS								
SSU	1.000		0	0	0	0	NR	0
State and tribal landfill and/or solid waste disposal site lists								
SWF/LF	0.500		0	0	0	NR	NR	0
LF SPECIAL WASTE	0.500		0	0	0	NR	NR	0
IL NIPC	0.500		0	2	1	NR	NR	3
CCDD	0.500		0	0	0	NR	NR	0
State and tribal leaking storage tank lists								
LUST	0.500		2	3	11	NR	NR	16

MAP FINDINGS SUMMARY

Database	Search Distance (Miles)	Target Property	< 1/8	1/8 - 1/4	1/4 - 1/2	1/2 - 1	> 1	Total Plotted
LUST TRUST	0.500		0	0	0	NR	NR	0
INDIAN LUST	0.500		0	0	0	NR	NR	0
State and tribal registered storage tank lists								
UST	0.250		2	3	NR	NR	NR	5
AST	0.250		0	0	NR	NR	NR	0
INDIAN UST	0.250		0	0	NR	NR	NR	0
FEMA UST	0.250		0	0	NR	NR	NR	0
State and tribal institutional control / engineering control registries								
ENG CONTROLS	0.500		0	1	3	NR	NR	4
INST CONTROL	0.500		0	0	3	NR	NR	3
State and tribal voluntary cleanup sites								
INDIAN VCP	0.500		0	0	0	NR	NR	0
SRP	0.500		0	2	4	NR	NR	6
State and tribal Brownfields sites								
BROWNFIELDS	0.500		0	0	0	NR	NR	0
ADDITIONAL ENVIRONMENTAL RECORDS								
Local Brownfield lists								
US BROWNFIELDS	0.500		0	0	0	NR	NR	0
Local Lists of Landfill / Solid Waste Disposal Sites								
DEBRIS REGION 9	0.500		0	0	0	NR	NR	0
ODI	0.500		0	0	0	NR	NR	0
INDIAN ODI	0.500		0	0	0	NR	NR	0
Local Lists of Hazardous waste / Contaminated Sites								
US CDL	TP		NR	NR	NR	NR	NR	0
CDL	TP		NR	NR	NR	NR	NR	0
US HIST CDL	TP		NR	NR	NR	NR	NR	0
Local Land Records								
LIENS 2	TP		NR	NR	NR	NR	NR	0
Records of Emergency Release Reports								
HMIRS	TP		NR	NR	NR	NR	NR	0
SPILLS	TP	1	NR	NR	NR	NR	NR	1
SPILLS 90	TP		NR	NR	NR	NR	NR	0
Other Ascertainable Records								
RCRA NonGen / NLR	0.250		1	1	NR	NR	NR	2
DOT OPS	TP		NR	NR	NR	NR	NR	0
DOD	1.000		0	0	0	0	NR	0

MAP FINDINGS SUMMARY

Database	Search Distance (Miles)	Target Property	< 1/8	1/8 - 1/4	1/4 - 1/2	1/2 - 1	> 1	Total Plotted
FUDS	1.000		0	0	0	0	NR	0
CONSENT	1.000		0	0	0	0	NR	0
ROD	1.000		0	0	0	0	NR	0
UMTRA	0.500		0	0	0	NR	NR	0
US MINES	0.250		0	0	NR	NR	NR	0
TRIS	TP		NR	NR	NR	NR	NR	0
TSCA	TP		NR	NR	NR	NR	NR	0
FTTS	TP		NR	NR	NR	NR	NR	0
HIST FTTS	TP		NR	NR	NR	NR	NR	0
SSTS	TP		NR	NR	NR	NR	NR	0
ICIS	TP		NR	NR	NR	NR	NR	0
PADS	TP		NR	NR	NR	NR	NR	0
MLTS	TP		NR	NR	NR	NR	NR	0
RADINFO	TP		NR	NR	NR	NR	NR	0
FINDS	TP		NR	NR	NR	NR	NR	0
RAATS	TP		NR	NR	NR	NR	NR	0
RMP	TP		NR	NR	NR	NR	NR	0
UIC	TP		NR	NR	NR	NR	NR	0
NPDES	TP		NR	NR	NR	NR	NR	0
HWAR	TP		NR	NR	NR	NR	NR	0
DRYCLEANERS	0.250		0	0	NR	NR	NR	0
IMPDMENT	0.500		0	0	0	NR	NR	0
AIRS	TP		NR	NR	NR	NR	NR	0
TIER 2	TP		NR	NR	NR	NR	NR	0
INDIAN RESERV	1.000		0	0	0	0	NR	0
SCRD DRYCLEANERS	0.500		0	0	0	NR	NR	0
PIMW	0.250		0	0	NR	NR	NR	0
PCB TRANSFORMER	TP		NR	NR	NR	NR	NR	0
US FIN ASSUR	TP		NR	NR	NR	NR	NR	0
EPA WATCH LIST	TP		NR	NR	NR	NR	NR	0
Financial Assurance	TP		NR	NR	NR	NR	NR	0
COAL ASH	0.500		0	0	0	NR	NR	0
LEAD SMELTERS	TP		NR	NR	NR	NR	NR	0
US AIRS	TP		NR	NR	NR	NR	NR	0
COAL ASH DOE	TP		NR	NR	NR	NR	NR	0
2020 COR ACTION	0.250		0	0	NR	NR	NR	0
PRP	TP		NR	NR	NR	NR	NR	0
COAL ASH EPA	0.500		0	0	0	NR	NR	0
BOL	TP	1	NR	NR	NR	NR	NR	1
CHICAGO ENV	0.500	1	16	19	76	NR	NR	112
EDR HIGH RISK HISTORICAL RECORDS								
EDR Exclusive Records								
EDR MGP	1.000		0	0	0	0	NR	0
EDR US Hist Auto Stat	0.250		10	15	NR	NR	NR	25
EDR US Hist Cleaners	0.250		2	3	NR	NR	NR	5
EDR RECOVERED GOVERNMENT ARCHIVES								
Exclusive Recovered Govt. Archives								
RGA HWS	TP		NR	NR	NR	NR	NR	0

MAP FINDINGS SUMMARY

Database	Search Distance (Miles)	Target Property	< 1/8	1/8 - 1/4	1/4 - 1/2	1/2 - 1	> 1	Total Plotted
RGA LUST	TP		NR	NR	NR	NR	NR	0
RGA LF	TP		NR	NR	NR	NR	NR	0

NOTES:

TP = Target Property

NR = Not Requested at this Search Distance

Sites may be listed in more than one database

A1 **CHICAGO, CITY OF-DEPT OF FLEET MGMT/OLD CITY POUND** **CHICAGO ENV** **S113274315**
Target **650 W 83RD ST** **BOL** **N/A**
Property **CHICAGO, IL 60620**

Site 1 of 2 in cluster A

Actual:
601 ft.

CHICAGO ENV:

Map Location:	650 W 83RD STCHICAGO, IL(41.743447768000465, -87.64129214699966)
Complaints:	Not reported
Neshaps & Demolition Notices:	Not reported
Enforcement:	Not reported
Inspections:	Y
Permits:	Not reported
Tanks:	Not reported
Holds & Lust Nfr:	Not reported
Latitude:	41.743447768000465
Longitude:	-87.64129214699966

BOL:

Site Id:	170001848311
Inv Num:	0316715228
Interest Name:	Chicago, City of-Dept of Fleet Mgmt/Old City Pound
Interest Type:	BOL
Media Code:	LAND

A2 **SPILLS** **S112359906**
Target **650 W. 83RD ST.** **N/A**
Property **CHICAGO, IL**

Site 2 of 2 in cluster A

Actual:
601 ft.

SPILLS:

Incident ID:	NL860889
Incident Date:	Not reported
Date Received:	08/14/1986
Lust Ind:	Not reported
Facility Address:	650 W. 83RD ST.
Facility City:	CHICAGO
PRP Name:	UNKNOWN
AC:	Not reported
Source Table:	dbo_OCIN_INDCIDENTHIS

B3 **CHICAGO ENV** **S116619036**
SSW **661 W 83RD ST** **N/A**
< 1/8 **CHICAGO, IL**
0.006 mi.
33 ft. **Site 1 of 2 in cluster B**

Relative:
Lower

Actual:
600 ft.

CHICAGO ENV:

Map Location:	661 W 83RD STCHICAGO, IL(41.743407413000455, -87.64110817599965)
Complaints:	Not reported
Neshaps & Demolition Notices:	Not reported
Enforcement:	Not reported
Inspections:	Y
Permits:	Not reported
Tanks:	Not reported
Holds & Lust Nfr:	Not reported
Latitude:	41.743407413000455

(Continued) S116619036

Longitude: -87.64110817599965

C4 CHICAGO ENV S116618681
SSE 639 W 83RD ST N/A
< 1/8 CHICAGO, IL
0.007 mi.
38 ft. Site 1 of 2 in cluster C

Relative: CHICAGO ENV:
Lower Map Location: 639 W 83RD STCHICAGO, IL(41.74341502900046, -87.64037910599967)
Complaints: Not reported
Actual: Neshaps & Demolition Notices: Not reported
600 ft. Enforcement: Not reported
Inspections: Y
Permits: Not reported
Tanks: Not reported
Holds & Lust Nfr: Not reported
Latitude: 41.74341502900046
Longitude: -87.64037910599967

B5 CHICAGO ENV S116618925
SSW 653 W 83RD ST N/A
< 1/8 CHICAGO, IL
0.007 mi.
39 ft. Site 2 of 2 in cluster B

Relative: CHICAGO ENV:
Lower Map Location: 653 W 83RD STCHICAGO, IL(41.7434028290005, -87.64111008699967)
Complaints: Not reported
Actual: Neshaps & Demolition Notices: Not reported
600 ft. Enforcement: Not reported
Inspections: Not reported
Permits: Y
Tanks: Y
Holds & Lust Nfr: Not reported
Latitude: 41.7434028290005
Longitude: -87.64111008699967

D6 CHICAGO ENV S116619547
SW 712 W 83RD ST N/A
< 1/8 CHICAGO, IL
0.009 mi.
47 ft. Site 1 of 5 in cluster D

Relative: CHICAGO ENV:
Higher Map Location: 712 W 83RD STCHICAGO, IL(41.7439674470005, -87.60689077399968)
Complaints: Y
Actual: Neshaps & Demolition Notices: Not reported
606 ft. Enforcement: Not reported
Inspections: Not reported
Permits: Not reported
Tanks: Not reported
Holds & Lust Nfr: Not reported
Latitude: 41.7439674470005
Longitude: -87.60689077399968

D7 **WILSON FIELDS AUTO REPAIR SHOP** **EDR US Hist Auto Stat** **1009101039**
SW **744 W 83D** **N/A**
< 1/8 **CHICAGO, IL**
0.018 mi.
93 ft. **Site 2 of 5 in cluster D**

Relative: EDR Historical Auto Stations:
Higher Name: WILSON FIELDS AUTO REPAIR SHOP
Year: 1928
Actual: Type: AUTOMOBILE REPAIRING
606 ft.

D8 **CHICAGO ENV** **S116619916**
SW **740 W 83RD ST** **N/A**
< 1/8 **CHICAGO, IL**
0.018 mi.
96 ft. **Site 3 of 5 in cluster D**

Relative: CHICAGO ENV:
Higher Map Location: 740 W 83RD STCHICAGO, IL(41.7434082310005, -87.64230852599968)
Complaints: Y
Actual: Neshaps & Demolition Notices: Not reported
606 ft. Enforcement: Not reported
Inspections: Y
Permits: Not reported
Tanks: Not reported
Holds & Lust Nfr: Not reported
Latitude: 41.7434082310005
Longitude: -87.64230852599968

D9 **CHICAGO ENV** **S116619614**
SW **717 W 83RD ST** **N/A**
< 1/8 **CHICAGO, IL**
0.019 mi.
101 ft. **Site 4 of 5 in cluster D**

Relative: CHICAGO ENV:
Higher Map Location: 717 W 83RD STCHICAGO, IL(41.74335427200049, -87.64247680599965)
Complaints: Not reported
Actual: Neshaps & Demolition Notices: Y
606 ft. Enforcement: Not reported
Inspections: Y
Permits: Not reported
Tanks: Not reported
Holds & Lust Nfr: Not reported
Latitude: 41.74335427200049
Longitude: -87.64247680599965

C10
SE
< 1/8
0.032 mi.
167 ft.

541 W 83RD ST
CHICAGO, IL

Site 2 of 2 in cluster C

CHICAGO ENV: **S116617295**
N/A

Relative:
Lower

Actual:
600 ft.

Map Location:	541 W 83RD STCHICAGO, IL(41.7438826500005, -87.63531046699967)
Complaints:	Not reported
Neshaps & Demolition Notices:	Y
Enforcement:	Not reported
Inspections:	Y
Permits:	Not reported
Tanks:	Not reported
Holds & Lust Nfr:	Not reported
Latitude:	41.7438826500005
Longitude:	-87.63531046699967

Map Location:	541 W 83RD STCHICAGO, IL(41.7438826500005, -87.63531046699967)
Complaints:	Not reported
Neshaps & Demolition Notices:	Y
Enforcement:	Not reported
Inspections:	Y
Permits:	Not reported
Tanks:	Not reported
Holds & Lust Nfr:	Not reported
Latitude:	41.7438826500005
Longitude:	-87.63531046699967

E11
WNW
< 1/8
0.049 mi.
261 ft.

717 W 82ND ST
CHICAGO, IL

Site 1 of 2 in cluster E

CHICAGO ENV: **S116619613**
N/A

Relative:
Higher

Actual:
601 ft.

Map Location:	717 W 82ND STCHICAGO, IL(41.745202694000454, -87.6422105159997)
Complaints:	Y
Neshaps & Demolition Notices:	Not reported
Enforcement:	Not reported
Inspections:	Not reported
Permits:	Not reported
Tanks:	Not reported
Holds & Lust Nfr:	Not reported
Latitude:	41.745202694000454
Longitude:	-87.6422105159997

12
NNE
< 1/8
0.053 mi.
279 ft.

SMALL BUSINESS ADMIN.
8201 SOUTH WALLACE
CHICAGO, IL 60620

LUST: **S104189895**
N/A

Relative:
Lower

Actual:
600 ft.

Incident Num:	913213
IL EPA Id:	0316715047
Product:	Fuel Oil, Non Petro
IEMA Date:	11/07/1991

SMALL BUSINESS ADMIN. (Continued) **S104189895**

Project Manager:	Myers
Project Manager Phone:	(217) 785-7491
Email:	Dave.Myers@illinois.gov
PRP Name:	Small Business Admin.
PRP Contact:	Don Pellico
PRP Address:	500 West Madison St., Suite 1250
PRP City,St,Zip:	Chicago, IL 60661
PRP Phone:	3123534528
Site Classification:	Not reported
Section 57.5(g) Letter:	731
Date Section 57.5(g) Letter:	Not reported
Non LUST Determination Letter:	Not reported
20 Report Received:	Not reported
45 Report Received:	Not reported
NFA/NFR Letter:	**01/26/2010**
NFR Date Recorded:	Not reported

D13 **PUTMAN BROS** **EDR US Hist Auto Stat** **1009115034**
WSW **8256 58 EMERALD AV** **N/A**
< 1/8 **CHICAGO, IL**
0.055 mi.
292 ft. **Site 5 of 5 in cluster D**

Relative: **Lower**

Actual: **600 ft.**

EDR Historical Auto Stations:

Name:	PUTMAN BROS
Year:	1923
Type:	AUTOMOBILE REPAIRING

F14 **CHICAGO ENV** **S116619355**
NW **700 W 81ST PL** **N/A**
< 1/8 **CHICAGO, IL**
0.073 mi.
387 ft. **Site 1 of 2 in cluster F**

Relative: **Higher**

Actual: **602 ft.**

CHICAGO ENV:

Map Location:	700 W 81ST PLCHICAGO, IL(41.74617752400047, -87.64160095899967)
Complaints:	Not reported
Neshaps & Demolition Notices:	Y
Enforcement:	Not reported
Inspections:	Not reported
Permits:	Not reported
Tanks:	Not reported
Holds & Lust Nfr:	Not reported
Latitude:	41.74617752400047
Longitude:	-87.64160095899967

F15 **CHICAGO ENV** **S116619470**
NW **706 W 81ST PL** **N/A**
< 1/8 **CHICAGO, IL**
0.074 mi.
393 ft. **Site 2 of 2 in cluster F**

Relative: CHICAGO ENV:
Higher Map Location: 706 W 81ST PLCHICAGO, IL(41.74616830600047, -87.64178071499964)
Complaints: Not reported
Actual: Neshaps & Demolition Notices: Y
601 ft. Enforcement: Not reported
Inspections: Not reported
Permits: Not reported
Tanks: Not reported
Holds & Lust Nfr: Not reported
Latitude: 41.74616830600047
Longitude: -87.64178071499964

E16 **CHICAGO ENV** **S116619874**
WNW **736 W 82ND ST** **N/A**
< 1/8 **CHICAGO, IL**
0.078 mi.
413 ft. **Site 2 of 2 in cluster E**

Relative: CHICAGO ENV:
Lower Map Location: 736 W 82ND STCHICAGO, IL(41.745247632000485, -87.6429410619997)
Complaints: Not reported
Actual: Neshaps & Demolition Notices: Y
596 ft. Enforcement: Not reported
Inspections: Not reported
Permits: Not reported
Tanks: Not reported
Holds & Lust Nfr: Not reported
Latitude: 41.745247632000485
Longitude: -87.6429410619997

G17 **FALCON #3** **UST** **U003929730**
WSW **8255 SOUTH HALSTED** **N/A**
< 1/8 **CHICAGO, IL 60620**
0.084 mi.
446 ft. **Site 1 of 10 in cluster G**

Relative: UST:
Higher Facility ID: 2041853
Facility Status: ACTIVE
Actual: **Facility Type:** **SELF-SERVICE STATION**
602 ft. Owner Id: U0036983
Owner Name: Mohammed Abdallah
Owner Address: 11034 Woodstock Dr.
Owner City,St,Zip: Orland Park, IL 60462

Tank Number: 1
Tank Status: **Currently in use**
Tank Capacity: 15000
Tank Substance: Gasoline
Last Used Date: Not reported
OSFM First Notify Date: 4/27/2004
Red Tag Issue Date: Not reported

FALCON #3 (Continued) **U003929730**

Install Date:	9/4/2003
Green Tag Decal:	**O000146**
Green Tag Issue Date:	**7/18/2013**
Green Tag Expire Date:	**12/31/2015**
Fee Due:	$0.00
MOTOR FUEL PERMIT INSPECTION DATE:	7/18/2013
MOTOR FUEL PERMIT EXPIRATION DATE:	12/31/2015
MOTOR FUEL TYPE:	SelfSrv
Pending Nov:	N
IEMA:	Not reported
Equipment Type:	Corrosion Prot - Piping
Equipment:	Flexible Non-Corrosive
Last Passing Date:	N/A
Test Expire Date:	N/A

Tank Number:	2
Tank Status:	**Currently in use**
Tank Capacity:	8000
Tank Substance:	Gasoline
Last Used Date:	Not reported
OSFM First Notify Date:	4/27/2004
Red Tag Issue Date:	Not reported
Install Date:	9/4/2003
Green Tag Decal:	**O000146**
Green Tag Issue Date:	**7/18/2013**
Green Tag Expire Date:	**12/31/2015**
Fee Due:	$0.00
MOTOR FUEL PERMIT INSPECTION DATE:	7/18/2013
MOTOR FUEL PERMIT EXPIRATION DATE:	12/31/2015
MOTOR FUEL TYPE:	SelfSrv
Pending Nov:	N
IEMA:	Not reported
Equipment Type:	Corrosion Prot - Piping
Equipment:	Flexible Non-Corrosive
Last Passing Date:	N/A
Test Expire Date:	N/A

Tank Number:	3
Tank Status:	**Currently in use**
Tank Capacity:	7000
Tank Substance:	Diesel Fuel
Last Used Date:	Not reported
OSFM First Notify Date:	4/27/2004
Red Tag Issue Date:	Not reported
Install Date:	9/4/2003
Green Tag Decal:	**O000146**
Green Tag Issue Date:	**7/18/2013**
Green Tag Expire Date:	**12/31/2015**
Fee Due:	$0.00
MOTOR FUEL PERMIT INSPECTION DATE:	7/18/2013
MOTOR FUEL PERMIT EXPIRATION DATE:	12/31/2015
MOTOR FUEL TYPE:	SelfSrv
Pending Nov:	N
IEMA:	Not reported
Equipment Type:	Corrosion Prot - Piping

FALCON #3 (Continued) **U003929730**

Equipment: Flexible Non-Corrosive
Last Passing Date: N/A
Test Expire Date: N/A

G18 **EDR US Hist Auto Stat** **1015649276**
WSW **8255 S HALSTED ST** **N/A**
< 1/8 **CHICAGO, IL 60620**
0.084 mi.
446 ft. **Site 2 of 10 in cluster G**

Relative: EDR Historical Auto Stations:
Higher
Name: 83RD ST GAS
Year: 2005
Actual: Address: 8255 S HALSTED ST
602 ft.

Name: 83RD ST GAS
Year: 2006
Address: 8255 S HALSTED ST

Name: 83RD ST GAS
Year: 2007
Address: 8255 S HALSTED ST

Name: CITGO
Year: 2009
Address: 8255 S HALSTED ST

Name: 83RD STREET GAS
Year: 2010
Address: 8255 S HALSTED ST

Name: 83RD ST GAS
Year: 2011
Address: 8255 S HALSTED ST

Name: 83RD ST GAS
Year: 2012
Address: 8255 S HALSTED ST

G19 **PAT S CAR CARE CENTER** **EDR US Hist Auto Stat** **1009074937**
WSW **8301 S HALSTED ST** **N/A**
< 1/8 **CHICAGO, IL**
0.087 mi.
460 ft. **Site 3 of 10 in cluster G**

Relative: EDR Historical Auto Stations:
Lower
Name: PAT S CAR CARE CENTER
Year: 2003
Actual: Type: AUTOMOBILE REPAIR AND SERVICE
600 ft.

Name: PATS CAR CARE CENTER
Year: 2000
Address: 8301 S HALSTED ST

Name: PATS CAR CARE CTR
Year: 2001

PAT S CAR CARE CENTER (Continued) **1009074937**

Address: 8301 S HALSTED ST

Name: PATS CAR CARE CTR
Year: 2003
Address: 8301 S HALSTED ST

Name: PATS CAR CARE CTR
Year: 2004
Address: 8301 S HALSTED ST

G20 **BANK OF COMMERCE & IND** **RCRA-SQG 1000462985**
WSW **8259 S HALSTED ST** **FINDS ILD984812537**
< 1/8 **CHICAGO, IL 60620** **LUST**
0.094 mi.
495 ft. **Site 4 of 10 in cluster G**

Relative:
Higher

Actual:
601 ft.

RCRA-SQG:
Date form received by agency: 01/23/1991
Facility name: BANK OF COMMERCE AND IND
Facility address: 8259 S HALSTED ST
CHICAGO, IL 60620
EPA ID: ILD984812537
Mailing address: 6100 NORTHWEST HWY
CHICAGO, IL 60631
Contact: DONALD HOUDER
Contact address: 6100 NORTHWEST HWY
CHICAGO, IL 60631
Contact country: US
Contact telephone: (312) 775-8000
Contact email: Not reported
EPA Region: 05
Classification: Small Small Quantity Generator
Description: Handler: generates more than 100 and less than 1000 kg of hazardous waste during any calendar month and accumulates less than 6000 kg of hazardous waste at any time; or generates 100 kg or less of hazardous waste during any calendar month, and accumulates more than 1000 kg of hazardous waste at any time

Owner/Operator Summary:
Owner/operator name: BANK OF COMMERCE AND IND
Owner/operator address: Not reported
Not reported
Owner/operator country: Not reported
Owner/operator telephone: Not reported
Legal status: Private
Owner/Operator Type: Owner
Owner/Op start date: Not reported
Owner/Op end date: Not reported

Handler Activities Summary:
U.S. importer of hazardous waste: No
Mixed waste (haz. and radioactive): No
Recycler of hazardous waste: No
Transporter of hazardous waste: No
Treater, storer or disposer of HW: No
Underground injection activity: No
On-site burner exemption: No

BANK OF COMMERCE & IND (Continued) **1000462985**

Furnace exemption:	No
Used oil fuel burner:	No
Used oil processor:	No
User oil refiner:	No
Used oil fuel marketer to burner:	No
Used oil Specification marketer:	No
Used oil transfer facility:	No
Used oil transporter:	No

Hazardous Waste Summary:

Waste code: D001

Waste name: IGNITABLE HAZARDOUS WASTES ARE THOSE WASTES WHICH HAVE A FLASHPOINT OF LESS THAN 140 DEGREES FAHRENHEIT AS DETERMINED BY A PENSKY-MARTENS CLOSED CUP FLASH POINT TESTER. ANOTHER METHOD OF DETERMINING THE FLASH POINT OF A WASTE IS TO REVIEW THE MATERIAL SAFETY DATA SHEET, WHICH CAN BE OBTAINED FROM THE MANUFACTURER OR DISTRIBUTOR OF THE MATERIAL. LACQUER THINNER IS AN EXAMPLE OF A COMMONLY USED SOLVENT WHICH WOULD BE CONSIDERED AS IGNITABLE HAZARDOUS WASTE.

Violation Status: No violations found

FINDS:

Registry ID: 110005884052

Environmental Interest/Information System

ACES (Illinois - Agency Compliance And Enforcement System) is the Illinois EPA Project to facilitate the permitting operations

RCRAInfo is a national information system that supports the Resource Conservation and Recovery Act (RCRA) program through the tracking of events and activities related to facilities that generate, transport, and treat, store, or dispose of hazardous waste. RCRAInfo allows RCRA program staff to track the notification, permit, compliance, and corrective action activities required under RCRA.

LUST:

Incident Num:	910309
IL EPA Id:	0316715033
Product:	Gasoline
IEMA Date:	02/06/1991
Project Manager:	D. Hollis
Project Manager Phone:	Not reported
Email:	Not reported
PRP Name:	Bank of Commerce & Industry
PRP Contact:	Donald Houder
PRP Address:	6100 North Northwest Hwy.
PRP City,St,Zip:	Chicago, IL
PRP Phone:	Not reported
Site Classification:	Not reported
Section 57.5(g) Letter:	731
Date Section 57.5(g) Letter:	Not reported
Non LUST Determination Letter:	Not reported
20 Report Received:	02/29/1992
45 Report Received:	02/29/1992
NFA/NFR Letter:	**07/10/1995**

BANK OF COMMERCE & IND (Continued) **1000462985**

NFR Date Recorded: Not reported

G21 **BOB AUTO REPAIR** **UST** **U000864743**
WSW **8259 S HALSTED ST** **N/A**
< 1/8 **CHICAGO, IL 60631**
0.094 mi.
495 ft. **Site 5 of 10 in cluster G**

Relative:
Higher

Actual:
601 ft.

UST:

Facility ID:	2026421
Facility Status:	CLOSED
Facility Type:	**NONE**
Owner Id:	U0001126
Owner Name:	Bank Of Commerce & Industry
Owner Address:	6100 N Nw Hwy
Owner City,St,Zip:	Chicago, IL 60631
Tank Number:	1
Tank Status:	**Removed**
Tank Capacity:	4000
Tank Substance:	Gasoline
Last Used Date:	1/1/1980
OSFM First Notify Date:	10/29/1990
Red Tag Issue Date:	Not reported
Install Date:	Not reported
Green Tag Decal:	**Not reported**
Green Tag Issue Date:	**Not reported**
Green Tag Expire Date:	**Not reported**
Fee Due:	$0.00
MOTOR FUEL PERMIT INSPECTION DATE:	Not reported
MOTOR FUEL PERMIT EXPIRATION DATE:	Not reported
MOTOR FUEL TYPE:	Not reported
Pending Nov:	N
IEMA:	91-0309
Equipment Type:	Not reported
Equipment:	Not reported
Last Passing Date:	Not reported
Test Expire Date:	Not reported
Tank Number:	2
Tank Status:	**Removed**
Tank Capacity:	4000
Tank Substance:	Gasoline
Last Used Date:	1/1/1980
OSFM First Notify Date:	10/29/1990
Red Tag Issue Date:	Not reported
Install Date:	Not reported
Green Tag Decal:	**Not reported**
Green Tag Issue Date:	**Not reported**
Green Tag Expire Date:	**Not reported**
Fee Due:	$0.00
MOTOR FUEL PERMIT INSPECTION DATE:	Not reported
MOTOR FUEL PERMIT EXPIRATION DATE:	Not reported
MOTOR FUEL TYPE:	Not reported
Pending Nov:	N
IEMA:	91-0309
Equipment Type:	Not reported

BOB AUTO REPAIR (Continued) **U000864743**

Equipment: Not reported
Last Passing Date: Not reported
Test Expire Date: Not reported

Tank Number: 3
Tank Status: Removed
Tank Capacity: 4000
Tank Substance: Gasoline
Last Used Date: 1/1/1980
OSFM First Notify Date: 10/29/1990
Red Tag Issue Date: Not reported
Install Date: Not reported
Green Tag Decal: Not reported
Green Tag Issue Date: Not reported
Green Tag Expire Date: Not reported
Fee Due: $0.00
MOTOR FUEL PERMIT INSPECTION DATE: Not reported
MOTOR FUEL PERMIT EXPIRATION DATE: Not reported
MOTOR FUEL TYPE: Not reported
Pending Nov: N
IEMA: 91-0309
Equipment Type: Not reported
Equipment: Not reported
Last Passing Date: Not reported
Test Expire Date: Not reported

Tank Number: 4
Tank Status: Removed
Tank Capacity: 300
Tank Substance: Used Oil
Last Used Date: 1/1/1980
OSFM First Notify Date: 10/29/1990
Red Tag Issue Date: Not reported
Install Date: Not reported
Green Tag Decal: Not reported
Green Tag Issue Date: Not reported
Green Tag Expire Date: Not reported
Fee Due: $0.00
MOTOR FUEL PERMIT INSPECTION DATE: Not reported
MOTOR FUEL PERMIT EXPIRATION DATE: Not reported
MOTOR FUEL TYPE: Not reported
Pending Nov: N
IEMA: Not reported
Equipment Type: Not reported
Equipment: Not reported
Last Passing Date: Not reported
Test Expire Date: Not reported

Tank Number: 5
Tank Status: Removed
Tank Capacity: 4000
Tank Substance: Gasoline
Last Used Date: 1/1/1980
OSFM First Notify Date: 2/28/1991

BOB AUTO REPAIR (Continued) **U000864743**

Red Tag Issue Date:	Not reported
Install Date:	Not reported
Green Tag Decal:	**Not reported**
Green Tag Issue Date:	**Not reported**
Green Tag Expire Date:	**Not reported**
Fee Due:	$0.00
MOTOR FUEL PERMIT INSPECTION DATE:	Not reported
MOTOR FUEL PERMIT EXPIRATION DATE:	Not reported
MOTOR FUEL TYPE:	Not reported
Pending Nov:	N
IEMA:	91-0309
Equipment Type:	Not reported
Equipment:	Not reported
Last Passing Date:	Not reported
Test Expire Date:	Not reported

Tank Number:	6
Tank Status:	**Removed**
Tank Capacity:	4000
Tank Substance:	Gasoline
Last Used Date:	1/1/1980
OSFM First Notify Date:	2/28/1991
Red Tag Issue Date:	Not reported
Install Date:	Not reported
Green Tag Decal:	**Not reported**
Green Tag Issue Date:	**Not reported**
Green Tag Expire Date:	**Not reported**
Fee Due:	$0.00
MOTOR FUEL PERMIT INSPECTION DATE:	Not reported
MOTOR FUEL PERMIT EXPIRATION DATE:	Not reported
MOTOR FUEL TYPE:	Not reported
Pending Nov:	N
IEMA:	91-0309
Equipment Type:	Not reported
Equipment:	Not reported
Last Passing Date:	Not reported
Test Expire Date:	Not reported

Tank Number:	7
Tank Status:	**Removed**
Tank Capacity:	550
Tank Substance:	Heating Oil
Last Used Date:	1/1/1992
OSFM First Notify Date:	6/3/1992
Red Tag Issue Date:	Not reported
Install Date:	Not reported
Green Tag Decal:	**Not reported**
Green Tag Issue Date:	**Not reported**
Green Tag Expire Date:	**Not reported**
Fee Due:	$0.00
MOTOR FUEL PERMIT INSPECTION DATE:	Not reported
MOTOR FUEL PERMIT EXPIRATION DATE:	Not reported
MOTOR FUEL TYPE:	Not reported
Pending Nov:	N
IEMA:	91-0309

BOB AUTO REPAIR (Continued) U000864743

Equipment Type: Not reported
Equipment: Not reported
Last Passing Date: Not reported
Test Expire Date: Not reported

G22 EDR US Hist Cleaners 1015099840
WSW **8301 S HALSTED ST** N/A
< 1/8 **CHICAGO, IL 60620**
0.101 mi.
533 ft. **Site 6 of 10 in cluster G**

Relative: EDR Historical Cleaners:
Lower Name: COIN WASH
Year: 1999
Actual: Address: 8301 S HALSTED ST
600 ft.

H23 **HECKLER GEO H** EDR US Hist Auto Stat 1009100980
WSW **8318 S HALSTED** N/A
< 1/8 **CHICAGO, IL**
0.102 mi.
541 ft. **Site 1 of 3 in cluster H**

Relative: EDR Historical Auto Stations:
Higher Name: HECKLER GEO H
Year: 1928
Actual: Type: AUTOMOBILE REPAIRING
601 ft.

G24 EDR US Hist Auto Stat 1009071646
WSW **8300 S HALSTED ST** N/A
< 1/8 **CHICAGO, IL 60620**
0.103 mi.
542 ft. **Site 7 of 10 in cluster G**

Relative: EDR Historical Auto Stations:
Lower Name: MARQUETTE AUTO RADIATOR SERV
Year: 2003
Actual: Type: RADIATORS AUTOMOTIVE REBUILDING AND REPAIRING
600 ft.

Name: PHONEDIATOR SERVICE INC
Year: 2003
Type: RADIATORS AUTOMOTIVE REBUILDING AND REPAIRING

Name: MARQUETTE AUTO RADIATOR SERVICE
Year: 1999
Address: 8300 S HALSTED ST

Name: MARQUETTE AUTO RADIATOR SERVICE
Year: 2000
Address: 8300 S HALSTED ST

Name: MARKET AUTO RADIATOR
Year: 2002
Address: 8300 S HALSTED ST

Name: CAR COOL INC

(Continued) 1009071646

Year: 2003
Address: 8300 S HALSTED ST

Name: MARQUETTE AUTO RADIATOR SERV
Year: 2004
Address: 8300 S HALSTED ST

Name: MARQUETTE AUTO RADIATOR SERVICE
Year: 2005
Address: 8300 S HALSTED ST

Name: MARQUETTE AUTO RADIATOR SERVICE
Year: 2006
Address: 8300 S HALSTED ST

Name: MARQUETTE AUTO RADIATOR SERVICE
Year: 2007
Address: 8300 S HALSTED ST

Name: MARQUETTE AUTO RADIATOR SERVICE
Year: 2008
Address: 8300 S HALSTED ST

Name: MARQUETTE AUTO RADIATOR SERVICE
Year: 2009
Address: 8300 S HALSTED ST

Name: A1 RADIATOR SVC INC
Year: 2010
Address: 8300 S HALSTED ST

Name: MARQUETTE AUTO RADIATOR SERVICE
Year: 2011
Address: 8300 S HALSTED ST

Name: MARQUETTE AUTO RADIATOR SERVICE
Year: 2012
Address: 8300 S HALSTED ST

H25
WSW
< 1/8
0.106 mi.
560 ft.

8312 S HALSTED ST
CHICAGO, IL 60620

Site 2 of 3 in cluster H

EDR US Hist Auto Stat 1015650993
N/A

Relative:
Lower

Actual:
600 ft.

EDR Historical Auto Stations:

Name: D & A AUTO REBUILDERS
Year: 1999
Address: 8312 S HALSTED ST

Name: D & A AUTO REBUILDERS
Year: 2000
Address: 8312 S HALSTED ST

Name: D & A AUTO REBUILDERS
Year: 2001
Address: 8312 S HALSTED ST

(Continued) 1015650993

Name: D & A AUTO REBUILDERS
Year: 2002
Address: 8312 S HALSTED ST

Name: D & A AUTO REBUILDERS
Year: 2003
Address: 8312 S HALSTED ST

G26
WSW
< 1/8
0.107 mi.
565 ft.

8310 S HALSTED ST
CHICAGO, IL 60620

Site 8 of 10 in cluster G

EDR US Hist Auto Stat 1009075354
N/A

Relative:
Lower

Actual:
600 ft.

EDR Historical Auto Stations:

Name: A & J AUTO REBUILDERS
Year: 2003
Type: AUTOMOBILE REPAIR AND SERVICE

Name: A & J AUTO REBUILDERS
Year: 1999
Address: 8310 S HALSTED ST

Name: A & J AUTO REBUILDERS
Year: 2000
Address: 8310 S HALSTED ST

Name: A & J AUTO REBUILDERS
Year: 2007
Address: 8310 S HALSTED ST

Name: A & J AUTO REBUILDERS
Year: 2008
Address: 8310 S HALSTED ST

Name: A & J AUTO REBUILDERS
Year: 2009
Address: 8310 S HALSTED ST

G27
West
< 1/8
0.110 mi.
581 ft.

8257 S HALSTED ST
CHICAGO, IL 60620

Site 9 of 10 in cluster G

EDR US Hist Auto Stat 1015649294
N/A

Relative:
Higher

Actual:
601 ft.

EDR Historical Auto Stations:

Name: BOBS AUTO REBUILDING
Year: 1999
Address: 8257 S HALSTED ST

Name: BOBS AUTO REBUILDING
Year: 2000
Address: 8257 S HALSTED ST

Name: BOBS AUTO REBUILDING
Year: 2001

(Continued) **1015649294**

Address: 8257 S HALSTED ST

Name: BOBS AUTO REPAIR
Year: 2002
Address: 8257 S HALSTED ST

G28 **CHICAGO DROP CLOTH SERVICE AND SALES** **EDR US Hist Cleaners** **1009188106**
West **8241 S HALSTED PKWY** **N/A**
< 1/8 **CHICAGO, IL**
0.111 mi.
586 ft. **Site 10 of 10 in cluster G**

Relative:
Higher

Actual:
601 ft.

EDR Historical Cleaners:
Name: CHICAGO DROP CLOTH SERVICE AND SALES
Year: 1981
Type: LAUNDRIES

I29 **VACANT LOT** **CHICAGO ENV** **S113274320**
North **631 W 81ST ST** **BOL** **N/A**
< 1/8 **CHICAGO, IL 60620**
0.117 mi.
618 ft. **Site 1 of 7 in cluster I**

Relative:
Higher

Actual:
603 ft.

CHICAGO ENV:
Map Location: 631 W 81ST STCHICAGO, IL(41.74699384100046, -87.63993940999967)
Complaints: Not reported
Neshaps & Demolition Notices: Not reported
Enforcement: Y
Inspections: Y
Permits: Not reported
Tanks: Not reported
Holds & Lust Nfr: Not reported
Latitude: 41.74699384100046
Longitude: -87.63993940999967

BOL:
Site Id: 170001865186
Inv Num: 0316715233
Interest Name: Vacant Lot
Interest Type: BOL
Media Code: LAND

I30 **CHICAGO ENV** **S116618581**
North **633 W 81ST ST** **N/A**
< 1/8 **CHICAGO, IL**
0.117 mi.
618 ft. **Site 2 of 7 in cluster I**

Relative:
Higher

Actual:
603 ft.

CHICAGO ENV:
Map Location: 633 W 81ST STCHICAGO, IL(41.74699329600048, -87.63999075699968)
Complaints: Not reported
Neshaps & Demolition Notices: Y
Enforcement: Not reported
Inspections: Not reported

(Continued) **S116618581**

Permits:	Not reported
Tanks:	Not reported
Holds & Lust Nfr:	Not reported
Latitude:	41.74699329600048
Longitude:	-87.63999075699968

I31 **CHICAGO ENV** **S116618506**
North **629 W 81ST ST** **N/A**
< 1/8 **CHICAGO, IL**
0.117 mi.
619 ft. **Site 3 of 7 in cluster I**

Relative: CHICAGO ENV:
Higher

Map Location:	629 W 81ST STCHICAGO, IL(41.746994386000495, -87.63988806399965)
Complaints:	Not reported
Neshaps & Demolition Notices:	Not reported
Enforcement:	Not reported
Inspections:	Y
Permits:	Y
Tanks:	Not reported
Holds & Lust Nfr:	Not reported
Latitude:	41.746994386000495
Longitude:	-87.63988806399965

Actual:
602 ft.

I32 **CHICAGO ENV** **S116619008**
North **659 W 81ST ST** **N/A**
< 1/8 **CHICAGO, IL**
0.117 mi.
619 ft. **Site 4 of 7 in cluster I**

Relative: CHICAGO ENV:
Higher

Map Location:	659 W 81ST STCHICAGO, IL(41.74697259800047, -87.64134976099967)
Complaints:	Not reported
Neshaps & Demolition Notices:	Y
Enforcement:	Not reported
Inspections:	Not reported
Permits:	Not reported
Tanks:	Not reported
Holds & Lust Nfr:	Not reported
Latitude:	41.74697259800047
Longitude:	-87.64134976099967

Actual:
605 ft.

J33 **HANSEN-STERLING DRUM CO** **RCRA NonGen / NLR** **1000379871**
NNE **8101 S WALLACE ST** **FINDS** **ILD000814814**
< 1/8 **CHICAGO, IL 60620**
0.117 mi.
619 ft. **Site 1 of 2 in cluster J**

Relative: RCRA NonGen / NLR:
Lower

Date form received by agency:	08/18/1980
Facility name:	HANSEN-STERLING DRUM CO
Facility address:	8101 S WALLACE ST
	CHICAGO, IL 60620
EPA ID:	ILD000814814
Mailing address:	610 W 81ST ST

Actual:
597 ft.

HANSEN-STERLING DRUM CO (Continued) **1000379871**

CHICAGO, IL 60620
Contact: HARVEY HANSON
Contact address: 610 W 81ST ST
CHICAGO, IL 60620
Contact country: US
Contact telephone: (312) 483-5050
Contact email: Not reported
EPA Region: 05
Classification: Non-Generator
Description: Handler: Non-Generators do not presently generate hazardous waste

Owner/Operator Summary:
Owner/operator name: NAME NOT REPORTED
Owner/operator address: ADDRESS NOT REPORTED
CITY NOT REPORTED, AK 99998
Owner/operator country: Not reported
Owner/operator telephone: (312) 555-1212
Legal status: Private
Owner/Operator Type: Operator
Owner/Op start date: Not reported
Owner/Op end date: Not reported

Owner/operator name: NAME NOT REPORTED
Owner/operator address: ADDRESS NOT REPORTED
CITY NOT REPORTED, AK 99998
Owner/operator country: Not reported
Owner/operator telephone: (312) 555-1212
Legal status: Private
Owner/Operator Type: Owner
Owner/Op start date: Not reported
Owner/Op end date: Not reported

Handler Activities Summary:
U.S. importer of hazardous waste: No
Mixed waste (haz. and radioactive): No
Recycler of hazardous waste: No
Transporter of hazardous waste: No
Treater, storer or disposer of HW: No
Underground injection activity: No
On-site burner exemption: No
Furnace exemption: No
Used oil fuel burner: No
Used oil processor: No
User oil refiner: No
Used oil fuel marketer to burner: No
Used oil Specification marketer: No
Used oil transfer facility: No
Used oil transporter: No

Hazardous Waste Summary:
Waste code: D000
Waste name: Not Defined

Waste code: D001
Waste name: IGNITABLE HAZARDOUS WASTES ARE THOSE WASTES WHICH HAVE A FLASHPOINT OF LESS THAN 140 DEGREES FAHRENHEIT AS DETERMINED BY A PENSKY-MARTENS

HANSEN-STERLING DRUM CO (Continued) **1000379871**

CLOSED CUP FLASH POINT TESTER. ANOTHER METHOD OF DETERMINING THE FLASH POINT OF A WASTE IS TO REVIEW THE MATERIAL SAFETY DATA SHEET, WHICH CAN BE OBTAINED FROM THE MANUFACTURER OR DISTRIBUTOR OF THE MATERIAL. LACQUER THINNER IS AN EXAMPLE OF A COMMONLY USED SOLVENT WHICH WOULD BE CONSIDERED AS IGNITABLE HAZARDOUS WASTE.

Waste code: D002
Waste name: A WASTE WHICH HAS A PH OF LESS THAN 2 OR GREATER THAN 12.5 IS CONSIDERED TO BE A CORROSIVE HAZARDOUS WASTE. SODIUM HYDROXIDE, A CAUSTIC SOLUTION WITH A HIGH PH, IS OFTEN USED BY INDUSTRIES TO CLEAN OR DEGREASE PARTS. HYDROCHLORIC ACID, A SOLUTION WITH A LOW PH, IS USED BY MANY INDUSTRIES TO CLEAN METAL PARTS PRIOR TO PAINTING. WHEN THESE CAUSTIC OR ACID SOLUTIONS BECOME CONTAMINATED AND MUST BE DISPOSED, THE WASTE WOULD BE A CORROSIVE HAZARDOUS WASTE.

Waste code: U001
Waste name: ACETALDEHYDE (I)

Waste code: U002
Waste name: ACETONE (I)

Waste code: U004
Waste name: ACETOPHENONE

Waste code: U008
Waste name: ACRYLIC ACID (I)

Waste code: U012
Waste name: ANILINE (I,T)

Waste code: U023
Waste name: BENZENE, (TRICHLOROMETHYL)-

Waste code: U026
Waste name: CHLORNAPHAZIN

Waste code: U031
Waste name: 1-BUTANOL (I)

Waste code: U043
Waste name: ETHENE, CHLORO-

Waste code: U049
Waste name: BENZENAMINE, 4-CHLORO-2-METHYL-, HYDROCHLORIDE

Waste code: U054
Waste name: Not Defined

Waste code: U056
Waste name: BENZENE, HEXAHYDRO- (I)

Waste code: U057
Waste name: CYCLOHEXANONE (I)

Waste code: U064
Waste name: BENZO[RST]PENTAPHENE

HANSEN-STERLING DRUM CO (Continued) **1000379871**

Waste code: U075
Waste name: DICHLORODIFLUOROMETHANE

Waste code: U076
Waste name: ETHANE, 1,1-DICHLORO-

Waste code: U077
Waste name: ETHANE, 1,2-DICHLORO-

Waste code: U078
Waste name: 1,1-DICHLOROETHYLENE

Waste code: U079
Waste name: 1,2-DICHLOROETHYLENE

Waste code: U080
Waste name: METHANE, DICHLORO-

Waste code: U081
Waste name: 2,4-DICHLOROPHENOL

Waste code: U082
Waste name: 2,6-DICHLOROPHENOL

Waste code: U083
Waste name: PROPANE, 1,2-DICHLORO-

Waste code: U084
Waste name: 1,3-DICHLOROPROPENE

Waste code: U085
Waste name: 2,2'-BIOXIRANE

Waste code: U086
Waste name: N,N'-DIETHYLHYDRAZINE

Waste code: U087
Waste name: O,O-DIETHYL S-METHYL DITHIOPHOSPHATE

Waste code: U104
Waste name: Not Defined

Waste code: U105
Waste name: BENZENE, 1-METHYL-2,4-DINITRO-

Waste code: U106
Waste name: BENZENE, 2-METHYL-1,3-DINITRO-

Waste code: U110
Waste name: DIPROPYLAMINE (I)

Waste code: U112
Waste name: ACETIC ACID ETHYL ESTER (I)

Waste code: U122
Waste name: FORMALDEHYDE

HANSEN-STERLING DRUM CO (Continued) **1000379871**

Waste code: U127
Waste name: BENZENE, HEXACHLORO-

Waste code: U128
Waste name: 1,3-BUTADIENE, 1,1,2,3,4,4-HEXACHLORO-

Waste code: U131
Waste name: ETHANE, HEXACHLORO-

Waste code: U140
Waste name: ISOBUTYL ALCOHOL (I,T)

Waste code: U154
Waste name: METHANOL (I)

Waste code: U159
Waste name: 2-BUTANONE (I,T)

Waste code: U161
Waste name: METHYL ISOBUTYL KETONE (I)

Waste code: U188
Waste name: PHENOL

Waste code: U194
Waste name: 1-PROPANAMINE (I,T)

Waste code: U196
Waste name: PYRIDINE

Waste code: U207
Waste name: BENZENE, 1,2,4,5-TETRACHLORO-

Waste code: U208
Waste name: ETHANE, 1,1,1,2-TETRACHLORO-

Waste code: U209
Waste name: ETHANE, 1,1,2,2-TETRACHLORO-

Waste code: U210
Waste name: ETHENE, TETRACHLORO-

Waste code: U220
Waste name: BENZENE, METHYL-

Waste code: U226
Waste name: ETHANE, 1,1,1-TRICHLORO-

Waste code: U228
Waste name: ETHENE, TRICHLORO-

Waste code: U238
Waste name: CARBAMIC ACID, ETHYL ESTER

Waste code: U239
Waste name: BENZENE, DIMETHYL- (I,T)

HANSEN-STERLING DRUM CO (Continued) **1000379871**

Violation Status: No violations found

FINDS:

Registry ID: 110005811149

Environmental Interest/Information System
RCRAInfo is a national information system that supports the Resource Conservation and Recovery Act (RCRA) program through the tracking of events and activities related to facilities that generate, transport, and treat, store, or dispose of hazardous waste. RCRAInfo allows RCRA program staff to track the notification, permit, compliance, and corrective action activities required under RCRA.

J34 **AWMCO INC** **AIRS S107740030**
NNE **601 W 81ST ST** **BOL N/A**
< 1/8 **CHICAGO, IL 60620** **CHICAGO ENV**
0.118 mi.
622 ft. **Site 2 of 2 in cluster J**

Relative:
Lower

Actual:
596 ft.

IL AIRS:

Facility ID:	Not reported
ID Number:	031600CZP
Year:	2009
Contact Name:	Not reported
Contact Title:	Not reported
Contact Tele:	Not reported
Contact Extention:	Not reported
Contact EMail:	Not reported
Contact Fax:	Not reported
Cease Operation Date:	Not reported
SIC Code:	3297
Address Type Code:	Not reported

Detail:

Year:	2009
Id Num:	031600CZP
Pollutant Code:	PART
Tons Per Year:	0

Year:	2009
Id Num:	031600CZP
Pollutant Code:	PM10
Tons Per Year:	0

Year:	2009
Id Num:	031600CZP
Pollutant Code:	PM10
Tons Per Year:	0

Year:	2009
Id Num:	031600CZP
Pollutant Code:	PART
Tons Per Year:	0

Facility ID:	3151
ID Number:	031600CZP

AWMCO INC (Continued) **S107740030**

Year:	2007
Contact Name:	Luke O'Toole
Contact Title:	Vice President
Contact Tele:	773-846-1760
Contact Extention:	Not reported
Contact EMail:	Not reported
Contact Fax:	Not reported
Cease Operation Date:	Not reported
SIC Code:	3297
Address Type Code:	Not reported

Facility ID:	3151
ID Number:	031600CZP
Year:	2006
Contact Name:	Luke O'Toole
Contact Title:	Vice President
Contact Tele:	773-846-1760
Contact Extention:	Not reported
Contact EMail:	Not reported
Contact Fax:	773-846-7722
Cease Operation Date:	Not reported
SIC Code:	3297
Address Type Code:	LOC

BOL:

Site Id:	170000047768
Inv Num:	0316005307
Interest Name:	Asbestos Wood Mfg Co Inc
Interest Type:	BOL
Media Code:	LAND

CHICAGO ENV:

Map Location:	601 W 81ST STCHICAGO, IL(41.74698296800045, -87.64043023999966)
Complaints:	Not reported
Neshaps & Demolition Notices:	Not reported
Enforcement:	Not reported
Inspections:	Y
Permits:	Y
Tanks:	Not reported
Holds & Lust Nfr:	Not reported
Latitude:	41.74698296800045
Longitude:	-87.64043023999966

Map Location:	601 W 81ST STCHICAGO, IL(41.74698296800045, -87.64043023999966)
Complaints:	Not reported
Neshaps & Demolition Notices:	Not reported
Enforcement:	Not reported
Inspections:	Y
Permits:	Y
Tanks:	Not reported
Holds & Lust Nfr:	Not reported
Latitude:	41.74698296800045
Longitude:	-87.64043023999966

H35
SW
< 1/8
0.123 mi.
649 ft.

8344 S HALSTED ST
CHICAGO, IL 60620

EDR US Hist Auto Stat **1009104486**
N/A

Site 3 of 3 in cluster H

Relative:
Higher

Actual:
606 ft.

EDR Historical Auto Stations:

Name:	RICHARDSON WILFRED G
Year:	1928
Type:	AUTOMOBILE GARAGES
Name:	BURTONS AUTO REPAIR
Year:	1999
Address:	8344 S HALSTED ST
Name:	BURTONS AUTO REPAIR
Year:	2000
Address:	8344 S HALSTED ST
Name:	BURTONS AUTO REPAIR
Year:	2001
Address:	8344 S HALSTED ST
Name:	BURTONS AUTO REPAIR
Year:	2002
Address:	8344 S HALSTED ST
Name:	BURTONS AUTO REPAIR
Year:	2003
Address:	8344 S HALSTED ST
Name:	BURTONS AUTO REPAIR
Year:	2006
Address:	8344 S HALSTED ST
Name:	BURTONS AUTO REPAIR
Year:	2007
Address:	8344 S HALSTED ST
Name:	BURTONS AUTO REPAIR
Year:	2008
Address:	8344 S HALSTED ST
Name:	BURTONS AUTO REPAIR
Year:	2009
Address:	8344 S HALSTED ST

K36
WNW
1/8-1/4
0.126 mi.
665 ft.

TEXACO PETROLEUM PRODUCTS J LEE TEXACO SERV TOWING
8200 S HALSTED PKWY
CHICAGO, IL

EDR US Hist Auto Stat **1009075995**
N/A

Site 1 of 3 in cluster K

Relative:
Lower

Actual:
600 ft.

EDR Historical Auto Stations:

Name:	J LEE TEXACO SERV
Year:	1981
Type:	SERVICE STATIONS GASOLINE AND OIL
Name:	TEXACO PETROLEUM PRODUCTS J LEE TEXACO SERV TOWING
Year:	1981

TEXACO PETROLEUM PRODUCTS J LEE TEXACO SERV TOWING (Continued) **1009075995**

Type: SERVICE STATIONS GASOLINE AND OIL

I37 **MEYER INDUSTRIAL CONTAINER** **RCRA-LQG** **1000379872**
North **610 W 81ST ST** **ILD025316126**
1/8-1/4 **CHICAGO, IL 60623**
0.129 mi.
679 ft. **Site 5 of 7 in cluster I**

Relative:
Lower

Actual:
596 ft.

RCRA-LQG:

Date form received by agency:	03/01/2012
Facility name:	MEYER INDUSTRIAL CONTAINER
Facility address:	610 W 81ST ST CHICAGO, IL 60623
EPA ID:	ILD025316126
Contact:	NATE SMITH
Contact address:	Not reported Not reported
Contact country:	Not reported
Contact telephone:	(773) 835-5051
Contact email:	Not reported
EPA Region:	05
Land type:	Private
Classification:	Large Quantity Generator
Description:	Handler: generates 1,000 kg or more of hazardous waste during any calendar month; or generates more than 1 kg of acutely hazardous waste during any calendar month; or generates more than 100 kg of any residue or contaminated soil, waste or other debris resulting from the cleanup of a spill, into or on any land or water, of acutely hazardous waste during any calendar month; or generates 1 kg or less of acutely hazardous waste during any calendar month, and accumulates more than 1 kg of acutely hazardous waste at any time; or generates 100 kg or less of any residue or contaminated soil, waste or other debris resulting from the cleanup of a spill, into or on any land or water, of acutely hazardous waste during any calendar month, and accumulates more than 100 kg of that material at any time

Owner/Operator Summary:

Owner/operator name:	MEYER INDUSTRIAL CONTAINER LLC
Owner/operator address:	610 W 81ST ST CHICAGO, IL 60620
Owner/operator country:	US
Owner/operator telephone:	Not reported
Legal status:	Private
Owner/Operator Type:	Owner
Owner/Op start date:	09/01/2003
Owner/Op end date:	Not reported

Owner/operator name:	MEYER INDUSTRIAL CONTAINER
Owner/operator address:	610 W 81ST ST CHICAGO, IL 60620
Owner/operator country:	US
Owner/operator telephone:	Not reported
Legal status:	Private
Owner/Operator Type:	Operator
Owner/Op start date:	09/01/2003
Owner/Op end date:	Not reported

MEYER INDUSTRIAL CONTAINER (Continued) **1000379872**

Owner/operator name: MEYER INDUSTRIAL CONTAINER LLC
Owner/operator address: 610 W 81ST ST
CHICAGO, IL 60620
Owner/operator country: US
Owner/operator telephone: Not reported
Legal status: Private
Owner/Operator Type: Operator
Owner/Op start date: 09/01/2003
Owner/Op end date: Not reported

Owner/operator name: MEYER INDUSTRIAL CONTAINER
Owner/operator address: 610 W 81ST ST
CHICAGO, IL 60620
Owner/operator country: US
Owner/operator telephone: Not reported
Legal status: Private
Owner/Operator Type: Owner
Owner/Op start date: 09/01/2003
Owner/Op end date: Not reported

Handler Activities Summary:
U.S. importer of hazardous waste: No
Mixed waste (haz. and radioactive): No
Recycler of hazardous waste: No
Transporter of hazardous waste: No
Treater, storer or disposer of HW: No
Underground injection activity: No
On-site burner exemption: No
Furnace exemption: No
Used oil fuel burner: No
Used oil processor: No
User oil refiner: No
Used oil fuel marketer to burner: No
Used oil Specification marketer: No
Used oil transfer facility: No
Used oil transporter: No

Historical Generators:
Date form received by agency: 03/01/2012
Site name: MEYER INDUSTRIAL CONTAINER
Classification: Large Quantity Generator

Date form received by agency: 03/01/2010
Site name: MEYER INDUSTRIAL CONTAINER
Classification: Large Quantity Generator

Date form received by agency: 03/01/2008
Site name: MEYER INDUSTRIAL CONTAINER LLC
Classification: Large Quantity Generator

Date form received by agency: 03/01/2007
Site name: MEYER INDUSTRIAL CONTAINER
Classification: Small Quantity Generator

Date form received by agency: 03/01/2006
Site name: MEYER INDUSTRIAL CONTAINER

MEYER INDUSTRIAL CONTAINER (Continued) **1000379872**

Classification: Small Quantity Generator

Date form received by agency: 03/22/2004
Site name: MEYER INDUSTRIAL CONTAINER LLC
Classification: Conditionally Exempt Small Quantity Generator

Date form received by agency: 11/15/1980
Site name: HANSEN-STERLING DRUM CO
Classification: Not a generator, verified

Date form received by agency: 08/18/1980
Site name: HANSEN-STERLING DRUM CO
Classification: Large Quantity Generator

Hazardous Waste Summary:
Waste code: D002
Waste name: A WASTE WHICH HAS A PH OF LESS THAN 2 OR GREATER THAN 12.5 IS CONSIDERED TO BE A CORROSIVE HAZARDOUS WASTE. SODIUM HYDROXIDE, A CAUSTIC SOLUTION WITH A HIGH PH, IS OFTEN USED BY INDUSTRIES TO CLEAN OR DEGREASE PARTS. HYDROCHLORIC ACID, A SOLUTION WITH A LOW PH, IS USED BY MANY INDUSTRIES TO CLEAN METAL PARTS PRIOR TO PAINTING. WHEN THESE CAUSTIC OR ACID SOLUTIONS BECOME CONTAMINATED AND MUST BE DISPOSED, THE WASTE WOULD BE A CORROSIVE HAZARDOUS WASTE.

Waste code: D002
Waste name: A WASTE WHICH HAS A PH OF LESS THAN 2 OR GREATER THAN 12.5 IS CONSIDERED TO BE A CORROSIVE HAZARDOUS WASTE. SODIUM HYDROXIDE, A CAUSTIC SOLUTION WITH A HIGH PH, IS OFTEN USED BY INDUSTRIES TO CLEAN OR DEGREASE PARTS. HYDROCHLORIC ACID, A SOLUTION WITH A LOW PH, IS USED BY MANY INDUSTRIES TO CLEAN METAL PARTS PRIOR TO PAINTING. WHEN THESE CAUSTIC OR ACID SOLUTIONS BECOME CONTAMINATED AND MUST BE DISPOSED, THE WASTE WOULD BE A CORROSIVE HAZARDOUS WASTE.

Waste code: D002
Waste name: A WASTE WHICH HAS A PH OF LESS THAN 2 OR GREATER THAN 12.5 IS CONSIDERED TO BE A CORROSIVE HAZARDOUS WASTE. SODIUM HYDROXIDE, A CAUSTIC SOLUTION WITH A HIGH PH, IS OFTEN USED BY INDUSTRIES TO CLEAN OR DEGREASE PARTS. HYDROCHLORIC ACID, A SOLUTION WITH A LOW PH, IS USED BY MANY INDUSTRIES TO CLEAN METAL PARTS PRIOR TO PAINTING. WHEN THESE CAUSTIC OR ACID SOLUTIONS BECOME CONTAMINATED AND MUST BE DISPOSED, THE WASTE WOULD BE A CORROSIVE HAZARDOUS WASTE.

Waste code: D000
Waste name: Not Defined

Waste code: D001
Waste name: IGNITABLE HAZARDOUS WASTES ARE THOSE WASTES WHICH HAVE A FLASHPOINT OF LESS THAN 140 DEGREES FAHRENHEIT AS DETERMINED BY A PENSKY-MARTENS CLOSED CUP FLASH POINT TESTER. ANOTHER METHOD OF DETERMINING THE FLASH POINT OF A WASTE IS TO REVIEW THE MATERIAL SAFETY DATA SHEET, WHICH CAN BE OBTAINED FROM THE MANUFACTURER OR DISTRIBUTOR OF THE MATERIAL. LACQUER THINNER IS AN EXAMPLE OF A COMMONLY USED SOLVENT WHICH WOULD BE CONSIDERED AS IGNITABLE HAZARDOUS WASTE.

Waste code: D002
Waste name: A WASTE WHICH HAS A PH OF LESS THAN 2 OR GREATER THAN 12.5 IS CONSIDERED TO BE A CORROSIVE HAZARDOUS WASTE. SODIUM HYDROXIDE, A

MEYER INDUSTRIAL CONTAINER (Continued) **1000379872**

CAUSTIC SOLUTION WITH A HIGH PH, IS OFTEN USED BY INDUSTRIES TO CLEAN OR DEGREASE PARTS. HYDROCHLORIC ACID, A SOLUTION WITH A LOW PH, IS USED BY MANY INDUSTRIES TO CLEAN METAL PARTS PRIOR TO PAINTING. WHEN THESE CAUSTIC OR ACID SOLUTIONS BECOME CONTAMINATED AND MUST BE DISPOSED, THE WASTE WOULD BE A CORROSIVE HAZARDOUS WASTE.

Waste code: F001
Waste name: THE FOLLOWING SPENT HALOGENATED SOLVENTS USED IN DEGREASING: TETRACHLOROETHYLENE, TRICHLOROETHYLENE, METHYLENE CHLORIDE, 1,1,1-TRICHLOROETHANE, CARBON TETRACHLORIDE, AND CHLORINATED FLUOROCARBONS; ALL SPENT SOLVENT MIXTURES/BLENDS USED IN DEGREASING CONTAINING, BEFORE USE, A TOTAL OF TEN PERCENT OR MORE (BY VOLUME) OF ONE OR MORE OF THE ABOVE HALOGENATED SOLVENTS OR THOSE SOLVENTS LISTED IN F002, F004, AND F005, AND STILL BOTTOMS FROM THE RECOVERY OF THESE SPENT SOLVENTS AND SPENT SOLVENT MIXTURES.

Waste code: F002
Waste name: THE FOLLOWING SPENT HALOGENATED SOLVENTS: TETRACHLOROETHYLENE, METHYLENE CHLORIDE, TRICHLOROETHYLENE, 1,1,1-TRICHLOROETHANE, CHLOROBENZENE, 1,1,2-TRICHLORO-1,2,2-TRIFLUOROETHANE, ORTHO-DICHLOROBENZENE, TRICHLOROFLUOROMETHANE, AND 1,1,2-TRICHLOROETHANE; ALL SPENT SOLVENT MIXTURES/BLENDS CONTAINING, BEFORE USE, A TOTAL OF TEN PERCENT OR MORE (BY VOLUME) OF ONE OR MORE OF THE ABOVE HALOGENATED SOLVENTS OR THOSE LISTED IN F001, F004, OR F005, AND STILL BOTTOMS FROM THE RECOVERY OF THESE SPENT SOLVENTS AND SPENT SOLVENT MIXTURES.

Waste code: F003
Waste name: THE FOLLOWING SPENT NON-HALOGENATED SOLVENTS: XYLENE, ACETONE, ETHYL ACETATE, ETHYL BENZENE, ETHYL ETHER, METHYL ISOBUTYL KETONE, N-BUTYL ALCOHOL, CYCLOHEXANONE, AND METHANOL; ALL SPENT SOLVENT MIXTURES/BLENDS CONTAINING, BEFORE USE, ONLY THE ABOVE SPENT NON-HALOGENATED SOLVENTS; AND ALL SPENT SOLVENT MIXTURES/BLENDS CONTAINING, BEFORE USE, ONE OR MORE OF THE ABOVE NON-HALOGENATED SOLVENTS, AND, A TOTAL OF TEN PERCENT OR MORE (BY VOLUME) OF ONE OR MORE OF THOSE SOLVENTS LISTED IN F001, F002, F004, AND F005, AND STILL BOTTOMS FROM THE RECOVERY OF THESE SPENT SOLVENTS AND SPENT SOLVENT MIXTURES.

Waste code: F004
Waste name: THE FOLLOWING SPENT NON-HALOGENATED SOLVENTS: CRESOLS AND CRESYLIC ACID, AND NITROBENZENE; ALL SPENT SOLVENT MIXTURES/BLENDS CONTAINING, BEFORE USE, A TOTAL OF TEN PERCENT OR MORE (BY VOLUME) OF ONE OR MORE OF THE ABOVE NON-HALOGENATED SOLVENTS OR THOSE SOLVENTS LISTED IN F001, F002, AND F005; AND STILL BOTTOMS FROM THE RECOVERY OF THESE SPENT SOLVENTS AND SPENT SOLVENT MIXTURES.

Waste code: F005
Waste name: THE FOLLOWING SPENT NON-HALOGENATED SOLVENTS: TOLUENE, METHYL ETHYL KETONE, CARBON DISULFIDE, ISOBUTANOL, PYRIDINE, BENZENE, 2-ETHOXYETHANOL, AND 2-NITROPROPANE; ALL SPENT SOLVENT MIXTURES/BLENDS CONTAINING, BEFORE USE, A TOTAL OF TEN PERCENT OR MORE (BY VOLUME) OF ONE OR MORE OF THE ABOVE NON-HALOGENATED SOLVENTS OR THOSE SOLVENTS LISTED IN F001, F002, OR F004; AND STILL BOTTOMS FROM THE RECOVERY OF THESE SPENT SOLVENTS AND SPENT SOLVENT MIXTURES.

Waste code: F017

MEYER INDUSTRIAL CONTAINER (Continued) **1000379872**

Waste name: Not Defined

Waste code: F018
Waste name: Not Defined

Waste code: K078
Waste name: K078

Waste code: K086
Waste name: SOLVENT WASHES AND SLUDGES, CAUSTIC WASHES AND SLUDGES, OR WATER WASHES AND SLUDGES FROM CLEANING TUBS AND EQUIPMENT USED IN THE FORMULATION OF INK FROM PIGMENTS, DRIERS, SOAPS, AND STABILIZERS CONTAINING CHROMIUM AND LEAD.

Waste code: U001
Waste name: ACETALDEHYDE (I)

Waste code: U002
Waste name: ACETONE (I)

Waste code: U004
Waste name: ACETOPHENONE

Waste code: U008
Waste name: ACRYLIC ACID (I)

Waste code: U012
Waste name: ANILINE (I,T)

Waste code: U023
Waste name: BENZENE, (TRICHLOROMETHYL)-

Waste code: U026
Waste name: CHLORNAPHAZIN

Waste code: U031
Waste name: 1-BUTANOL (I)

Waste code: U043
Waste name: ETHENE, CHLORO-

Waste code: U049
Waste name: BENZENAMINE, 4-CHLORO-2-METHYL-, HYDROCHLORIDE

Waste code: U054
Waste name: Not Defined

Waste code: U056
Waste name: BENZENE, HEXAHYDRO- (I)

Waste code: U057
Waste name: CYCLOHEXANONE (I)

Waste code: U064
Waste name: BENZO[RST]PENTAPHENE

Waste code: U075

MEYER INDUSTRIAL CONTAINER (Continued) **1000379872**

Waste name: DICHLORODIFLUOROMETHANE

Waste code: U076
Waste name: ETHANE, 1,1-DICHLORO-

Waste code: U077
Waste name: ETHANE, 1,2-DICHLORO-

Waste code: U078
Waste name: 1,1-DICHLOROETHYLENE

Waste code: U079
Waste name: 1,2-DICHLOROETHYLENE

Waste code: U080
Waste name: METHANE, DICHLORO-

Waste code: U081
Waste name: 2,4-DICHLOROPHENOL

Waste code: U082
Waste name: 2,6-DICHLOROPHENOL

Waste code: U083
Waste name: PROPANE, 1,2-DICHLORO-

Waste code: U084
Waste name: 1,3-DICHLOROPROPENE

Waste code: U085
Waste name: 2,2'-BIOXIRANE

Waste code: U086
Waste name: N,N'-DIETHYLHYDRAZINE

Waste code: U087
Waste name: O,O-DIETHYL S-METHYL DITHIOPHOSPHATE

Waste code: U104
Waste name: Not Defined

Waste code: U105
Waste name: BENZENE, 1-METHYL-2,4-DINITRO-

Waste code: U106
Waste name: BENZENE, 2-METHYL-1,3-DINITRO-

Waste code: U110
Waste name: DIPROPYLAMINE (I)

Waste code: U112
Waste name: ACETIC ACID ETHYL ESTER (I)

Waste code: U122
Waste name: FORMALDEHYDE

Waste code: U127

MEYER INDUSTRIAL CONTAINER (Continued) **1000379872**

Waste name: BENZENE, HEXACHLORO-

Waste code: U128
Waste name: 1,3-BUTADIENE, 1,1,2,3,4,4-HEXACHLORO-

Waste code: U131
Waste name: ETHANE, HEXACHLORO-

Waste code: U140
Waste name: ISOBUTYL ALCOHOL (I,T)

Waste code: U154
Waste name: METHANOL (I)

Waste code: U159
Waste name: 2-BUTANONE (I,T)

Waste code: U161
Waste name: METHYL ISOBUTYL KETONE (I)

Waste code: U188
Waste name: PHENOL

Waste code: U194
Waste name: 1-PROPANAMINE (I,T)

Waste code: U196
Waste name: PYRIDINE

Waste code: U207
Waste name: BENZENE, 1,2,4,5-TETRACHLORO-

Waste code: U208
Waste name: ETHANE, 1,1,1,2-TETRACHLORO-

Waste code: U209
Waste name: ETHANE, 1,1,2,2-TETRACHLORO-

Waste code: U210
Waste name: ETHENE, TETRACHLORO-

Waste code: U220
Waste name: BENZENE, METHYL-

Waste code: U226
Waste name: ETHANE, 1,1,1-TRICHLORO-

Waste code: U228
Waste name: ETHENE, TRICHLORO-

Waste code: U238
Waste name: CARBAMIC ACID, ETHYL ESTER

Waste code: U239
Waste name: BENZENE, DIMETHYL- (I,T)

MEYER INDUSTRIAL CONTAINER (Continued) **1000379872**

Biennial Reports:

Last Biennial Reporting Year: 2013

Annual Waste Handled:

Waste code:	D002
Waste name:	A WASTE WHICH HAS A PH OF LESS THAN 2 OR GREATER THAN 12.5 IS CONSIDERED TO BE A CORROSIVE HAZARDOUS WASTE. SODIUM HYDROXIDE, A CAUSTIC SOLUTION WITH A HIGH PH, IS OFTEN USED BY INDUSTRIES TO CLEAN OR DEGREASE PARTS. HYDROCHLORIC ACID, A SOLUTION WITH A LOW PH, IS USED BY MANY INDUSTRIES TO CLEAN METAL PARTS PRIOR TO PAINTING. WHEN THESE CAUSTIC OR ACID SOLUTIONS BECOME CONTAMINATED AND MUST BE DISPOSED, THE WASTE WOULD BE A CORROSIVE HAZARDOUS WASTE.
Amount (Lbs):	33881.2

Violation Status: No violations found

Evaluation Action Summary:

Evaluation date:	12/18/2013
Evaluation:	COMPLIANCE EVALUATION INSPECTION ON-SITE
Area of violation:	Not reported
Date achieved compliance:	Not reported
Evaluation lead agency:	EPA
Evaluation date:	01/15/2010
Evaluation:	FOLLOW-UP INSPECTION
Area of violation:	Not reported
Date achieved compliance:	Not reported
Evaluation lead agency:	State
Evaluation date:	12/04/2009
Evaluation:	COMPLIANCE EVALUATION INSPECTION ON-SITE
Area of violation:	Not reported
Date achieved compliance:	Not reported
Evaluation lead agency:	State
Evaluation date:	09/20/1990
Evaluation:	COMPLIANCE EVALUATION INSPECTION ON-SITE
Area of violation:	Not reported
Date achieved compliance:	Not reported
Evaluation lead agency:	EPA

I38 **ICIS 1008119764**
North **610 W 81ST ST** **FINDS N/A**
1/8-1/4 **CHICAGO, IL 60620** **HWAR**
0.129 mi. **AIRS**
679 ft. **Site 6 of 7 in cluster I** **US AIRS**
BOL
Relative: **CHICAGO ENV**
Lower

Actual: ICIS:
596 ft.

Enforcement Action ID:	05-2003-0350
FRS ID:	110018163850
Program ID:	NEI NEIIL0317367
Action Name:	MEYER INDUSTRIAL CONTAINER, LLC
Full Address:	610 W 81ST ST CHICAGO IL 60620-2511
State:	Illinois
Facility Name:	Not reported

(Continued) **1008119764**

Facility Address: 610 W 81ST ST
CHICAGO, IL 60620-2511
Enforcement Action Type: CAA 113A Admin Compliance Order (Non-Penalty)
Facility County: COOK
EPA Region #: 5

Enforcement Action ID: 05-2003-0350
FRS ID: 110018163850
Program ID: BOILER 912816
Action Name: MEYER INDUSTRIAL CONTAINER, LLC
Full Address: 610 W 81ST ST CHICAGO IL 60620-2511
State: Illinois
Facility Name: Not reported
Facility Address: 610 W 81ST ST
CHICAGO, IL 60620-2511
Enforcement Action Type: CAA 113A Admin Compliance Order (Non-Penalty)
Facility County: COOK
EPA Region #: 5

Enforcement Action ID: 05-2003-0350
FRS ID: 110018163850
Program ID: FRS 110018163850
Action Name: MEYER INDUSTRIAL CONTAINER, LLC
Full Address: 610 W 81ST ST CHICAGO IL 60620-2511
State: Illinois
Facility Name: MEYER INDUSTRIAL CONTAINER
Facility Address: 610 W 81ST ST
CHICAGO, IL 60620-2511
Enforcement Action Type: CAA 113A Admin Compliance Order (Non-Penalty)
Facility County: COOK
EPA Region #: 5

Enforcement Action ID: 05-2003-0350
FRS ID: 110018163850
Program ID: EIS 1895411
Action Name: MEYER INDUSTRIAL CONTAINER, LLC
Full Address: 610 W 81ST ST CHICAGO IL 60620-2511
State: Illinois
Facility Name: MEYER INDUSTRIAL CONTAINER
Facility Address: 610 W 81ST ST
CHICAGO, IL 60620-2511
Enforcement Action Type: CAA 113A Admin Compliance Order (Non-Penalty)
Facility County: COOK
EPA Region #: 5

Enforcement Action ID: 05-2003-0350
FRS ID: 110018163850
Program ID: OSHA-OIS 3492822
Action Name: MEYER INDUSTRIAL CONTAINER, LLC
Full Address: 610 W 81ST ST CHICAGO IL 60620-2511
State: Illinois
Facility Name: Not reported
Facility Address: 610 W 81ST ST
CHICAGO, IL 60620-2511
Enforcement Action Type: CAA 113A Admin Compliance Order (Non-Penalty)
Facility County: COOK
EPA Region #: 5

(Continued) **1008119764**

Enforcement Action ID: 05-2003-0350
FRS ID: 110018163850
Program ID: AIRS/AFS 1703101277
Action Name: MEYER INDUSTRIAL CONTAINER, LLC
Full Address: 610 W 81ST ST CHICAGO IL 60620-2511
State: Illinois
Facility Name: MEYER INDUSTRIAL CONTAINER
Facility Address: 610 W 81ST ST
CHICAGO, IL 60620-2511
Enforcement Action Type: CAA 113A Admin Compliance Order (Non-Penalty)
Facility County: COOK
EPA Region #: 5

Enforcement Action ID: 05-2003-0350
FRS ID: 110018163850
Program ID: ACES 170000389791
Action Name: MEYER INDUSTRIAL CONTAINER, LLC
Full Address: 610 W 81ST ST CHICAGO IL 60620-2511
State: Illinois
Facility Name: MEYER INDUSTRIAL CONTAINER
Facility Address: 610 W 81ST ST
CHICAGO, IL 60620-2511
Enforcement Action Type: CAA 113A Admin Compliance Order (Non-Penalty)
Facility County: COOK
EPA Region #: 5

Enforcement Action ID: 05-2003-0350
FRS ID: 110018163850
Program ID: ACES 170000042040
Action Name: MEYER INDUSTRIAL CONTAINER, LLC
Full Address: 610 W 81ST ST CHICAGO IL 60620-2511
State: Illinois
Facility Name: MEYER INDUSTRIAL CONTAINER
Facility Address: 610 W 81ST ST
CHICAGO, IL 60620-2511
Enforcement Action Type: CAA 113A Admin Compliance Order (Non-Penalty)
Facility County: COOK
EPA Region #: 5

Enforcement Action ID: 05-2003-0350
FRS ID: 110018163850
Program ID: RCRAINFO ILD025316126
Action Name: MEYER INDUSTRIAL CONTAINER, LLC
Full Address: 610 W 81ST ST CHICAGO IL 60620-2511
State: Illinois
Facility Name: HANSEN-STERLING DRUM CO
Facility Address: 610 W 81ST ST
CHICAGO, IL 60620-2511
Enforcement Action Type: CAA 113A Admin Compliance Order (Non-Penalty)
Facility County: COOK
EPA Region #: 5

Enforcement Action ID: 05-2003-0350
FRS ID: 110018163850
Program ID: BR ILD025316126
Action Name: MEYER INDUSTRIAL CONTAINER, LLC
Full Address: 610 W 81ST ST CHICAGO IL 60620-2511

(Continued) **1008119764**

State: Illinois
Facility Name: MEYER INDUSTRIAL CONTAINER
Facility Address: 610 W 81ST ST
CHICAGO, IL 60620-2511
Enforcement Action Type: CAA 113A Admin Compliance Order (Non-Penalty)
Facility County: COOK
EPA Region #: 5

Enforcement Action ID: 05-2003-0348
FRS ID: 110018163850
Program ID: OSHA-OIS 3492822
Action Name: MEYER INDUSTRIAL CONTAINER, LLC (IFCO)
Full Address: 610 W 81ST ST CHICAGO IL 60620-2511
State: Illinois
Facility Name: Not reported
Facility Address: 610 W 81ST ST
CHICAGO, IL 60620-2511
Enforcement Action Type: CAA 113D1 Action For Penalty
Facility County: COOK
EPA Region #: 5

Enforcement Action ID: 05-2003-0348
FRS ID: 110018163850
Program ID: NEI NEIIL0317367
Action Name: MEYER INDUSTRIAL CONTAINER, LLC (IFCO)
Full Address: 610 W 81ST ST CHICAGO IL 60620-2511
State: Illinois
Facility Name: Not reported
Facility Address: 610 W 81ST ST
CHICAGO, IL 60620-2511
Enforcement Action Type: CAA 113D1 Action For Penalty
Facility County: COOK
EPA Region #: 5

Enforcement Action ID: 05-2003-0348
FRS ID: 110018163850
Program ID: BOILER 912816
Action Name: MEYER INDUSTRIAL CONTAINER, LLC (IFCO)
Full Address: 610 W 81ST ST CHICAGO IL 60620-2511
State: Illinois
Facility Name: Not reported
Facility Address: 610 W 81ST ST
CHICAGO, IL 60620-2511
Enforcement Action Type: CAA 113D1 Action For Penalty
Facility County: COOK
EPA Region #: 5

Enforcement Action ID: 05-2003-0348
FRS ID: 110018163850
Program ID: FRS 110018163850
Action Name: MEYER INDUSTRIAL CONTAINER, LLC (IFCO)
Full Address: 610 W 81ST ST CHICAGO IL 60620-2511
State: Illinois
Facility Name: MEYER INDUSTRIAL CONTAINER
Facility Address: 610 W 81ST ST
CHICAGO, IL 60620-2511
Enforcement Action Type: CAA 113D1 Action For Penalty

(Continued) **1008119764**

Facility County: COOK
EPA Region #: 5

Enforcement Action ID: 05-2003-0348
FRS ID: 110018163850
Program ID: EIS 1895411
Action Name: MEYER INDUSTRIAL CONTAINER, LLC (IFCO)
Full Address: 610 W 81ST ST CHICAGO IL 60620-2511
State: Illinois
Facility Name: MEYER INDUSTRIAL CONTAINER
Facility Address: 610 W 81ST ST
CHICAGO, IL 60620-2511
Enforcement Action Type: CAA 113D1 Action For Penalty
Facility County: COOK
EPA Region #: 5

Enforcement Action ID: 05-2003-0348
FRS ID: 110018163850
Program ID: BR ILD025316126
Action Name: MEYER INDUSTRIAL CONTAINER, LLC (IFCO)
Full Address: 610 W 81ST ST CHICAGO IL 60620-2511
State: Illinois
Facility Name: MEYER INDUSTRIAL CONTAINER
Facility Address: 610 W 81ST ST
CHICAGO, IL 60620-2511
Enforcement Action Type: CAA 113D1 Action For Penalty
Facility County: COOK
EPA Region #: 5

Enforcement Action ID: 05-2003-0348
FRS ID: 110018163850
Program ID: AIRS/AFS 1703101277
Action Name: MEYER INDUSTRIAL CONTAINER, LLC (IFCO)
Full Address: 610 W 81ST ST CHICAGO IL 60620-2511
State: Illinois
Facility Name: MEYER INDUSTRIAL CONTAINER
Facility Address: 610 W 81ST ST
CHICAGO, IL 60620-2511
Enforcement Action Type: CAA 113D1 Action For Penalty
Facility County: COOK
EPA Region #: 5

Enforcement Action ID: 05-2003-0348
FRS ID: 110018163850
Program ID: ACES 170000389791
Action Name: MEYER INDUSTRIAL CONTAINER, LLC (IFCO)
Full Address: 610 W 81ST ST CHICAGO IL 60620-2511
State: Illinois
Facility Name: MEYER INDUSTRIAL CONTAINER
Facility Address: 610 W 81ST ST
CHICAGO, IL 60620-2511
Enforcement Action Type: CAA 113D1 Action For Penalty
Facility County: COOK
EPA Region #: 5

Enforcement Action ID: 05-2003-0348
FRS ID: 110018163850

(Continued) **1008119764**

Program ID: RCRAINFO ILD025316126
Action Name: MEYER INDUSTRIAL CONTAINER, LLC (IFCO)
Full Address: 610 W 81ST ST CHICAGO IL 60620-2511
State: Illinois
Facility Name: HANSEN-STERLING DRUM CO
Facility Address: 610 W 81ST ST
CHICAGO, IL 60620-2511
Enforcement Action Type: CAA 113D1 Action For Penalty
Facility County: COOK
EPA Region #: 5

Enforcement Action ID: 05-2003-0348
FRS ID: 110018163850
Program ID: ACES 170000042040
Action Name: MEYER INDUSTRIAL CONTAINER, LLC (IFCO)
Full Address: 610 W 81ST ST CHICAGO IL 60620-2511
State: Illinois
Facility Name: MEYER INDUSTRIAL CONTAINER
Facility Address: 610 W 81ST ST
CHICAGO, IL 60620-2511
Enforcement Action Type: CAA 113D1 Action For Penalty
Facility County: COOK
EPA Region #: 5

Program ID: ACES 170000042040
Facility Name: MEYER INDUSTRIAL CONTAINER
Address: 610 W 81ST ST
Tribal Indicator: N
Fed Facility: No
NAIC Code: Not reported
SIC Code: Not reported

Program ID: ACES 170000389791
Facility Name: MEYER INDUSTRIAL CONTAINER
Address: 610 W 81ST ST
Tribal Indicator: N
Fed Facility: No
NAIC Code: Not reported
SIC Code: Not reported

Program ID: AIRS/AFS 1703101277
Facility Name: MEYER INDUSTRIAL CONTAINER
Address: 610 W 81ST ST
Tribal Indicator: N
Fed Facility: No
NAIC Code: Not reported
SIC Code: Not reported

Program ID: BOILER 912816
Facility Name: MEYER INDUSTRIAL CONTAINER
Address: 610 W 81ST ST
Tribal Indicator: N
Fed Facility: No
NAIC Code: Not reported
SIC Code: Not reported

(Continued) **1008119764**

Program ID: BR ILD025316126
Facility Name: MEYER INDUSTRIAL CONTAINER
Address: 610 W 81ST ST
Tribal Indicator: N
Fed Facility: No
NAIC Code: Not reported
SIC Code: Not reported

Program ID: EIS 1895411
Facility Name: MEYER INDUSTRIAL CONTAINER
Address: 610 W 81ST ST
Tribal Indicator: N
Fed Facility: No
NAIC Code: Not reported
SIC Code: Not reported

Program ID: FRS 110018163850
Facility Name: MEYER INDUSTRIAL CONTAINER
Address: 610 W 81ST ST
Tribal Indicator: N
Fed Facility: No
NAIC Code: Not reported
SIC Code: Not reported

Program ID: NEI NEIIL0317367
Facility Name: MEYER INDUSTRIAL CONTAINER
Address: 610 W 81ST ST
Tribal Indicator: N
Fed Facility: No
NAIC Code: Not reported
SIC Code: Not reported

Program ID: OSHA-OIS 3492822
Facility Name: MEYER INDUSTRIAL CONTAINER
Address: 610 W 81ST ST
Tribal Indicator: N
Fed Facility: No
NAIC Code: Not reported
SIC Code: Not reported

Program ID: RCRAINFO ILD025316126
Facility Name: MEYER INDUSTRIAL CONTAINER
Address: 610 W 81ST ST
Tribal Indicator: N
Fed Facility: No
NAIC Code: Not reported
SIC Code: Not reported

Program ID: ACES 170000042040
Facility Name: MEYER INDUSTRIAL CONTAINER
Address: 610 W 81ST ST
Tribal Indicator: N
Fed Facility: No
NAIC Code: Not reported
SIC Code: Not reported

Program ID: ACES 170000389791

(Continued) **1008119764**

Facility Name: MEYER INDUSTRIAL CONTAINER
Address: 610 W 81ST ST
Tribal Indicator: N
Fed Facility: No
NAIC Code: Not reported
SIC Code: Not reported

Program ID: AIRS/AFS 1703101277
Facility Name: MEYER INDUSTRIAL CONTAINER
Address: 610 W 81ST ST
Tribal Indicator: N
Fed Facility: No
NAIC Code: Not reported
SIC Code: Not reported

Program ID: BOILER 912816
Facility Name: MEYER INDUSTRIAL CONTAINER
Address: 610 W 81ST ST
Tribal Indicator: N
Fed Facility: No
NAIC Code: Not reported
SIC Code: Not reported

Program ID: BR ILD025316126
Facility Name: MEYER INDUSTRIAL CONTAINER
Address: 610 W 81ST ST
Tribal Indicator: N
Fed Facility: No
NAIC Code: Not reported
SIC Code: Not reported

Program ID: EIS 1895411
Facility Name: MEYER INDUSTRIAL CONTAINER
Address: 610 W 81ST ST
Tribal Indicator: N
Fed Facility: No
NAIC Code: Not reported
SIC Code: Not reported

Program ID: FRS 110018163850
Facility Name: MEYER INDUSTRIAL CONTAINER
Address: 610 W 81ST ST
Tribal Indicator: N
Fed Facility: No
NAIC Code: Not reported
SIC Code: Not reported

Program ID: NEI NEIIL0317367
Facility Name: MEYER INDUSTRIAL CONTAINER
Address: 610 W 81ST ST
Tribal Indicator: N
Fed Facility: No
NAIC Code: Not reported
SIC Code: Not reported

Program ID: OSHA-OIS 3492822
Facility Name: MEYER INDUSTRIAL CONTAINER

(Continued) **1008119764**

Address: 610 W 81ST ST
Tribal Indicator: N
Fed Facility: No
NAIC Code: Not reported
SIC Code: Not reported

Program ID: RCRAINFO ILD025316126
Facility Name: MEYER INDUSTRIAL CONTAINER
Address: 610 W 81ST ST
Tribal Indicator: N
Fed Facility: No
NAIC Code: Not reported
SIC Code: Not reported

FINDS:

Registry ID: 110059201616

Environmental Interest/Information System
OSHA ESTABLISHMENT

Registry ID: 110018163850

Environmental Interest/Information System
AFS (Aerometric Information Retrieval System (AIRS) Facility Subsystem) replaces the former Compliance Data System (CDS), the National Emission Data System (NEDS), and the Storage and Retrieval of Aerometric Data (SAROAD). AIRS is the national repository for information concerning airborne pollution in the United States. AFS is used to track emissions and compliance data from industrial plants. AFS data are utilized by states to prepare State Implementation Plans to comply with regulatory programs and by EPA as an input for the estimation of total national emissions. AFS is undergoing a major redesign to support facility operating permits required under Title V of the Clean Air Act.

ACES (Illinois - Agency Compliance And Enforcement System) is the Illinois EPA Project to facilitate the permitting operations

OSHA ESTABLISHMENT

RCRAInfo is a national information system that supports the Resource Conservation and Recovery Act (RCRA) program through the tracking of events and activities related to facilities that generate, transport, and treat, store, or dispose of hazardous waste. RCRAInfo allows RCRA program staff to track the notification, permit, compliance, and corrective action activities required under RCRA.

HAZARDOUS WASTE BIENNIAL REPORTER

CRITERIA AND HAZARDOUS AIR POLLUTANT INVENTORY

HWAR:
USEPA Identification Number Of Company Submitting Report: ILD025316126
BOL Inventory Number Of Company Submitting Report: 0316710001

(Continued) **1008119764**

RCRA Generator Status 1=Lqg,2=Sqg,3=Cesqg,4=Nongenerator:	1
LQG Status Is For Current Year Only:	Not reported
Company Is Importer Of Hazardous Waste:	N
Company Is A Mixed Waster Generator:	N
Company Is A Transporter Of Hazardous Waste:	N
Company Is A Treater, Storer Or Disposer Of Hazardous Waste:	N
Company Is A Recycler Of Hazardous Waste:	N
Company Has A Small Quantity On-Site Burner Exemption:	N
Company Has A Smelting, Melting, Refining Furnace Exemption:	N
Company Involvement With Underground Injection Control:	N
Destination Facility For Universal Waste:	N
Company Is A Used Oil Transporter:	N
Company Is A Used Oil Transfer Facility:	N
Company Is A Used Oil Processor:	N
Company Is A Used Oil Re-Refiner:	N
Company Is An Off-Specification Used Oil Burner:	N
Company Is Marketer Who Directs Shipment Of Off-Spec Use Oil	N
Company Is Marketer 1st Claims Used Oil Meets The Spaces:	N
North American Industrial Classification System Code 1:	423840
North American Industrial Classification System Code 2:	Not reported
North American Industrial Classification System Code 3:	Not reported
North American Industrial Classification System Code 4:	Not reported
Site Land Type [1-9 & Blank - See Book]:	1
Owner Type [1-9 & Blank - See Book]:	1
Date Company Became Owner:	09012003
Operator Type [1-9 & Blank - See Book]:	1
Date Company Became Operator:	09012003
Comment Indicator Comments Not Part Of File:	N
Error Flag:	A
Entry Date:	05/16/11
Last Change Date:	00/00/00
Previous Change Date:	00/00/00

Waste Generation and Management:

Year:	2012
USEPA Id Number Of Company Submitting Report:	ILD025316126
BOL Inventory Num Of Company Submitting Report:	0316710001
EPA Hazardous Waste Code:	D001
EPA Hazardous Waste Code:	Not reported
EPA Hazardous Waste Code:	Not reported
EPA Hazardous Waste Code:	Not reported
EPA Hazardous Waste Code:	Not reported
Source Code:	G06
Management Method [If Waste Is A Residual]:	Not reported
Form Code:	W209
Waste Minimization Code (X,N,S,R,Y):	X
Unit Of Measure[1-Gallon, 2-Cubic Yards, 3-Pounds]:	1
Density In Pounds Per Gallon [Assumed Decimal 999999999.9]:	1100
Quantity Generated In Current Reporting Year:	0000007150
On-Site Management Indicator:	N
On-Site Management Method 1:	Not reported
On-Site Quantity 1 [Assumed Decimal 999999999.9]:	0000000000
On-Site Management Method 2:	Not reported
On-Site Quantity 2 [Assumed Decimal 999999999.9]:	0000000000
Off-Site Shipment Indicator:	Y
USEPA Id Number Of Company Shipped To 1:	IND000646943
Off-Site Management Method 1 [Y Or N]:	H061
Quantity Shipped Off-Site 1 [Assumed Decimal 999999999.9]:	0000007150

(Continued) **1008119764**

USEPA Id Number Of Company Shipped To 2:	Not reported
Off-Site Management Method 2:	Not reported
Quantity Shipped Off-Site 2 [Assumed Decimal 999999999.9]:	0000000000
USEPA Id Number Of Company Shipped To 3:	Not reported
Off-Site Management Method 3:	Not reported
Quantity Shipped Off-Site 3 [Assumed Decimal 999999999.9]:	0000000000
USEPA Id Number Of Company Shipped To 4:	Not reported
Off-Site Management Method 4:	Not reported
Quantity Shipped Off-Site 4 [Assumed Decimal 999999999.9]:	0000000000
USEPA Id Number Of Company Shipped To 5:	Not reported
Off-Site Management Method 5:	Not reported
Quantity Shipped Off-Site 5 [Assumed Decimal 999999999.9]:	0000000000
Comment Indicator Comments No Part Of File:	N
Y=After Review Override Normal Density Exceptions:	Not reported
Error Flag:	Not reported
Entry Date:	05/16/11
Last Change Date:	00/00/00
Previous Change Date:	00/00/00
Year:	2012
USEPA Id Number Of Company Submitting Report:	ILD025316126
BOL Inventory Num Of Company Submitting Report:	0316710001
EPA Hazardous Waste Code:	D002
EPA Hazardous Waste Code:	Not reported
EPA Hazardous Waste Code:	Not reported
EPA Hazardous Waste Code:	Not reported
EPA Hazardous Waste Code:	Not reported
Source Code:	G01
Management Method [If Waste Is A Residual]:	Not reported
Form Code:	W603
Waste Minimization Code (X,N,S,R,Y):	X
Unit Of Measure[1-Gallon, 2-Cubic Yards, 3-Pounds]:	1
Density In Pounds Per Gallon [Assumed Decimal 999999999.9]:	1000
Quantity Generated In Current Reporting Year:	0000005500
On-Site Management Indicator:	N
On-Site Management Method 1:	Not reported
On-Site Quantity 1 [Assumed Decimal 999999999.9]:	0000000000
On-Site Management Method 2:	Not reported
On-Site Quantity 2 [Assumed Decimal 999999999.9]:	0000000000
Off-Site Shipment Indicator:	Y
USEPA Id Number Of Company Shipped To 1:	IND000646943
Off-Site Management Method 1 [Y Or N]:	H141
Quantity Shipped Off-Site 1 [Assumed Decimal 999999999.9]:	0000005500
USEPA Id Number Of Company Shipped To 2:	Not reported
Off-Site Management Method 2:	Not reported
Quantity Shipped Off-Site 2 [Assumed Decimal 999999999.9]:	0000000000
USEPA Id Number Of Company Shipped To 3:	Not reported
Off-Site Management Method 3:	Not reported
Quantity Shipped Off-Site 3 [Assumed Decimal 999999999.9]:	0000000000
USEPA Id Number Of Company Shipped To 4:	Not reported
Off-Site Management Method 4:	Not reported
Quantity Shipped Off-Site 4 [Assumed Decimal 999999999.9]:	0000000000
USEPA Id Number Of Company Shipped To 5:	Not reported
Off-Site Management Method 5:	Not reported
Quantity Shipped Off-Site 5 [Assumed Decimal 999999999.9]:	0000000000
Comment Indicator Comments No Part Of File:	N
Y=After Review Override Normal Density Exceptions:	Not reported

(Continued) **1008119764**

Error Flag:	Not reported
Entry Date:	05/16/11
Last Change Date:	00/00/00
Previous Change Date:	00/00/00
Year:	2011
USEPA Id Number Of Company Submitting Report:	ILD025316126
BOL Inventory Num Of Company Submitting Report:	0316710001
EPA Hazardous Waste Code:	D002
EPA Hazardous Waste Code:	Not reported
EPA Hazardous Waste Code:	Not reported
EPA Hazardous Waste Code:	Not reported
EPA Hazardous Waste Code:	Not reported
Source Code:	G01
Management Method [If Waste Is A Residual]:	Not reported
Form Code:	W110
Waste Minimization Code (X,N,S,R,Y):	X
Unit Of Measure[1-Gallon, 2-Cubic Yards, 3-Pounds]:	1
Density In Pounds Per Gallon [Assumed Decimal 999999999.9]:	0880
Quantity Generated In Current Reporting Year:	0000038500
On-Site Management Indicator:	N
On-Site Management Method 1:	Not reported
On-Site Quantity 1 [Assumed Decimal 999999999.9]:	0000000000
On-Site Management Method 2:	Not reported
On-Site Quantity 2 [Assumed Decimal 999999999.9]:	0000000000
Off-Site Shipment Indicator:	Y
USEPA Id Number Of Company Shipped To 1:	IND000646943
Off-Site Management Method 1 [Y Or N]:	H141
Quantity Shipped Off-Site 1 [Assumed Decimal 999999999.9]:	0000038500
USEPA Id Number Of Company Shipped To 2:	Not reported
Off-Site Management Method 2:	Not reported
Quantity Shipped Off-Site 2 [Assumed Decimal 999999999.9]:	0000000000
USEPA Id Number Of Company Shipped To 3:	Not reported
Off-Site Management Method 3:	Not reported
Quantity Shipped Off-Site 3 [Assumed Decimal 999999999.9]:	0000000000
USEPA Id Number Of Company Shipped To 4:	Not reported
Off-Site Management Method 4:	Not reported
Quantity Shipped Off-Site 4 [Assumed Decimal 999999999.9]:	0000000000
USEPA Id Number Of Company Shipped To 5:	Not reported
Off-Site Management Method 5:	Not reported
Quantity Shipped Off-Site 5 [Assumed Decimal 999999999.9]:	0000000000
Comment Indicator Comments No Part Of File:	N
Y=After Review Override Normal Density Exceptions:	Not reported
Error Flag:	Not reported
Entry Date:	03/19/12
Last Change Date:	00/00/00
Previous Change Date:	00/00/00
Year:	2012
USEPA Id Number Of Company Submitting Report:	ILD025316126
BOL Inventory Num Of Company Submitting Report:	0316710001
EPA Hazardous Waste Code:	D002
EPA Hazardous Waste Code:	Not reported
EPA Hazardous Waste Code:	Not reported
EPA Hazardous Waste Code:	Not reported
EPA Hazardous Waste Code:	Not reported
Source Code:	G01

(Continued) **1008119764**

Management Method [If Waste Is A Residual]:	Not reported
Form Code:	W110
Waste Minimization Code (X,N,S,R,Y):	X
Unit Of Measure[1-Gallon, 2-Cubic Yards, 3-Pounds]:	1
Density In Pounds Per Gallon [Assumed Decimal 999999999.9]:	0880
Quantity Generated In Current Reporting Year:	0000074250
On-Site Management Indicator:	N
On-Site Management Method 1:	Not reported
On-Site Quantity 1 [Assumed Decimal 999999999.9]:	0000000000
On-Site Management Method 2:	Not reported
On-Site Quantity 2 [Assumed Decimal 999999999.9]:	0000000000
Off-Site Shipment Indicator:	Y
USEPA Id Number Of Company Shipped To 1:	IND000646943
Off-Site Management Method 1 [Y Or N]:	H141
Quantity Shipped Off-Site 1 [Assumed Decimal 999999999.9]:	0000074250
USEPA Id Number Of Company Shipped To 2:	Not reported
Off-Site Management Method 2:	Not reported
Quantity Shipped Off-Site 2 [Assumed Decimal 999999999.9]:	0000000000
USEPA Id Number Of Company Shipped To 3:	Not reported
Off-Site Management Method 3:	Not reported
Quantity Shipped Off-Site 3 [Assumed Decimal 999999999.9]:	0000000000
USEPA Id Number Of Company Shipped To 4:	Not reported
Off-Site Management Method 4:	Not reported
Quantity Shipped Off-Site 4 [Assumed Decimal 999999999.9]:	0000000000
USEPA Id Number Of Company Shipped To 5:	Not reported
Off-Site Management Method 5:	Not reported
Quantity Shipped Off-Site 5 [Assumed Decimal 999999999.9]:	0000000000
Comment Indicator Comments No Part Of File:	N
Y=After Review Override Normal Density Exceptions:	Not reported
Error Flag:	Not reported
Entry Date:	04/19/10
Last Change Date:	07/16/10
Previous Change Date:	00/00/00
Year:	2012
USEPA Id Number Of Company Submitting Report:	ILD025316126
BOL Inventory Num Of Company Submitting Report:	0316710001
EPA Hazardous Waste Code:	D002
EPA Hazardous Waste Code:	Not reported
EPA Hazardous Waste Code:	Not reported
EPA Hazardous Waste Code:	Not reported
EPA Hazardous Waste Code:	Not reported
Source Code:	G01
Management Method [If Waste Is A Residual]:	Not reported
Form Code:	W110
Waste Minimization Code (X,N,S,R,Y):	X
Unit Of Measure[1-Gallon, 2-Cubic Yards, 3-Pounds]:	1
Density In Pounds Per Gallon [Assumed Decimal 999999999.9]:	0880
Quantity Generated In Current Reporting Year:	0000038500
On-Site Management Indicator:	N
On-Site Management Method 1:	Not reported
On-Site Quantity 1 [Assumed Decimal 999999999.9]:	0000000000
On-Site Management Method 2:	Not reported
On-Site Quantity 2 [Assumed Decimal 999999999.9]:	0000000000
Off-Site Shipment Indicator:	Y
USEPA Id Number Of Company Shipped To 1:	IND000646943
Off-Site Management Method 1 [Y Or N]:	H141

(Continued) **1008119764**

Quantity Shipped Off-Site 1 [Assumed Decimal 999999999.9]:	0000038500
USEPA Id Number Of Company Shipped To 2:	Not reported
Off-Site Management Method 2:	Not reported
Quantity Shipped Off-Site 2 [Assumed Decimal 999999999.9]:	0000000000
USEPA Id Number Of Company Shipped To 3:	Not reported
Off-Site Management Method 3:	Not reported
Quantity Shipped Off-Site 3 [Assumed Decimal 999999999.9]:	0000000000
USEPA Id Number Of Company Shipped To 4:	Not reported
Off-Site Management Method 4:	Not reported
Quantity Shipped Off-Site 4 [Assumed Decimal 999999999.9]:	0000000000
USEPA Id Number Of Company Shipped To 5:	Not reported
Off-Site Management Method 5:	Not reported
Quantity Shipped Off-Site 5 [Assumed Decimal 999999999.9]:	0000000000
Comment Indicator Comments No Part Of File:	N
Y=After Review Override Normal Density Exceptions:	Not reported
Error Flag:	Not reported
Entry Date:	03/19/12
Last Change Date:	00/00/00
Previous Change Date:	00/00/00

Click this hyperlink while viewing on your computer to access
1 additional IL Manifest Waste Mgmt: record(s) in the EDR Site Report.

Transporter Identification:

USEPA Identification Number Of Company Submitting Report:	ILD025316126
Bol Inventory Number Of Company Submitting Report:	0316710001
USEPA Identification Number Of Hauler 1:	WI0000815381
USEPA Identification Number Of Hauler 2:	Not reported
USEPA Identification Number Of Hauler 3:	Not reported
USEPA Identification Number Of Hauler 4:	Not reported
USEPA Identification Number Of Hauler 5:	Not reported
USEPA Identification Number Of Hauler 6:	Not reported
USEPA Identification Number Of Hauler 7:	Not reported
USEPA Identification Number Of Hauler 8:	Not reported
Hauler Permit Number Of Hauler 1:	UPW0508337MN
Hauler Permit Number Of Hauler 2:	Not reported
Hauler Permit Number Of Hauler 3:	Not reported
Hauler Permit Number Of Hauler 4:	Not reported
Hauler Permit Number Of Hauler 5:	Not reported
Hauler Permit Number Of Hauler 6:	Not reported
Hauler Permit Number Of Hauler 7:	Not reported
Hauler Permit Number Of Hauler 8:	Not reported
Comment Indicator [Comments Not Part Of File]:	N
Error Flag:	Not reported
Entry Date:	03/19/12
Last Change Date:	00/00/00
Previous Change Date:	00/00/00

USEPA Identification Number Of Company Submitting Report:	ILD025316126
Bol Inventory Number Of Company Submitting Report:	0316710001
USEPA Identification Number Of Hauler 1:	WI0000815381
USEPA Identification Number Of Hauler 2:	Not reported
USEPA Identification Number Of Hauler 3:	Not reported
USEPA Identification Number Of Hauler 4:	Not reported
USEPA Identification Number Of Hauler 5:	Not reported
USEPA Identification Number Of Hauler 6:	Not reported
USEPA Identification Number Of Hauler 7:	Not reported

(Continued) **1008119764**

USEPA Identification Number Of Hauler 8:	Not reported
Hauler Permit Number Of Hauler 1:	UPW0508337MN
Hauler Permit Number Of Hauler 2:	Not reported
Hauler Permit Number Of Hauler 3:	Not reported
Hauler Permit Number Of Hauler 4:	Not reported
Hauler Permit Number Of Hauler 5:	Not reported
Hauler Permit Number Of Hauler 6:	Not reported
Hauler Permit Number Of Hauler 7:	Not reported
Hauler Permit Number Of Hauler 8:	Not reported
Comment Indicator [Comments Not Part Of File]:	N
Error Flag:	Not reported
Entry Date:	03/19/12
Last Change Date:	00/00/00
Previous Change Date:	00/00/00
USEPA Identification Number Of Company Submitting Report:	ILD025316126
Bol Inventory Number Of Company Submitting Report:	0316710001
USEPA Identification Number Of Hauler 1:	WI0000815381
USEPA Identification Number Of Hauler 2:	TXR000050930
USEPA Identification Number Of Hauler 3:	WI0000815381
USEPA Identification Number Of Hauler 4:	WI0000815381
USEPA Identification Number Of Hauler 5:	Not reported
USEPA Identification Number Of Hauler 6:	Not reported
USEPA Identification Number Of Hauler 7:	Not reported
USEPA Identification Number Of Hauler 8:	Not reported
Hauler Permit Number Of Hauler 1:	UPW0508337MN
Hauler Permit Number Of Hauler 2:	UPW0151288IL
Hauler Permit Number Of Hauler 3:	UPW0508337MN
Hauler Permit Number Of Hauler 4:	UPW0508337MN
Hauler Permit Number Of Hauler 5:	Not reported
Hauler Permit Number Of Hauler 6:	Not reported
Hauler Permit Number Of Hauler 7:	Not reported
Hauler Permit Number Of Hauler 8:	Not reported
Comment Indicator [Comments Not Part Of File]:	N
Error Flag:	Not reported
Entry Date:	05/16/11
Last Change Date:	00/00/00
Previous Change Date:	00/00/00
USEPA Identification Number Of Company Submitting Report:	ILD025316126
Bol Inventory Number Of Company Submitting Report:	0316710001
USEPA Identification Number Of Hauler 1:	WI0000815381
USEPA Identification Number Of Hauler 2:	Not reported
USEPA Identification Number Of Hauler 3:	Not reported
USEPA Identification Number Of Hauler 4:	Not reported
USEPA Identification Number Of Hauler 5:	Not reported
USEPA Identification Number Of Hauler 6:	Not reported
USEPA Identification Number Of Hauler 7:	Not reported
USEPA Identification Number Of Hauler 8:	Not reported
Hauler Permit Number Of Hauler 1:	UPW0508337MN
Hauler Permit Number Of Hauler 2:	Not reported
Hauler Permit Number Of Hauler 3:	Not reported
Hauler Permit Number Of Hauler 4:	Not reported
Hauler Permit Number Of Hauler 5:	Not reported
Hauler Permit Number Of Hauler 6:	Not reported
Hauler Permit Number Of Hauler 7:	Not reported
Hauler Permit Number Of Hauler 8:	Not reported

(Continued) **1008119764**

Comment Indicator [Comments Not Part Of File]:	N
Error Flag:	Not reported
Entry Date:	04/19/10
Last Change Date:	00/00/00
Previous Change Date:	00/00/00

USEPA Identification Number Of Company Submitting Report:	ILD025316126
BOL Inventory Number Of Company Submitting Report:	0316710001
RCRA Generator Status 1=Lqg,2=Sqg,3=Cesqg,4=Nongenerator:	1
LQG Status Is For Current Year Only:	Not reported
Company Is Importer Of Hazardous Waste:	N
Company Is A Mixed Waster Generator:	N
Company Is A Transporter Of Hazardous Waste:	N
Company Is A Treater, Storer Or Disposer Of Hazardous Waste:	N
Company Is A Recycler Of Hazardous Waste:	N
Company Has A Small Quantity On-Site Burner Exemption:	N
Company Has A Smelting, Melting, Refining Furnace Exemption:	N
Company Involvement With Underground Injection Control:	N
Destination Facility For Universal Waste:	N
Company Is A Used Oil Transporter:	N
Company Is A Used Oil Transfer Facility:	N
Company Is A Used Oil Processor:	N
Company Is A Used Oil Re-Refiner:	N
Company Is An Off-Specification Used Oil Burner:	N
Company Is Marketer Who Directs Shipment Of Off-Spec Use Oil	N
Company Is Marketer 1st Claims Used Oil Meets The Spaces:	N
North American Industrial Classification System Code 1:	332439
North American Industrial Classification System Code 2:	Not reported
North American Industrial Classification System Code 3:	Not reported
North American Industrial Classification System Code 4:	Not reported
Site Land Type [1-9 & Blank - See Book]:	1
Owner Type [1-9 & Blank - See Book]:	1
Date Company Became Owner:	09012003
Operator Type [1-9 & Blank - See Book]:	1
Date Company Became Operator:	09012003
Comment Indicator Comments Not Part Of File:	N
Error Flag:	Not reported
Entry Date:	03/19/12
Last Change Date:	00/00/00
Previous Change Date:	00/00/00

Waste Generation and Management:

Year:	2012
USEPA Id Number Of Company Submitting Report:	ILD025316126
BOL Inventory Num Of Company Submitting Report:	0316710001
EPA Hazardous Waste Code:	D001
EPA Hazardous Waste Code:	Not reported
EPA Hazardous Waste Code:	Not reported
EPA Hazardous Waste Code:	Not reported
EPA Hazardous Waste Code:	Not reported
Source Code:	G06
Management Method [If Waste Is A Residual]:	Not reported
Form Code:	W209
Waste Minimization Code (X,N,S,R,Y):	X
Unit Of Measure[1-Gallon, 2-Cubic Yards, 3-Pounds]:	1
Density In Pounds Per Gallon [Assumed Decimal 999999999.9]:	1100
Quantity Generated In Current Reporting Year:	0000007150

(Continued) **1008119764**

On-Site Management Indicator:	N
On-Site Management Method 1:	Not reported
On-Site Quantity 1 [Assumed Decimal 999999999.9]:	0000000000
On-Site Management Method 2:	Not reported
On-Site Quantity 2 [Assumed Decimal 999999999.9]:	0000000000
Off-Site Shipment Indicator:	Y
USEPA Id Number Of Company Shipped To 1:	IND000646943
Off-Site Management Method 1 [Y Or N]:	H061
Quantity Shipped Off-Site 1 [Assumed Decimal 999999999.9]:	0000007150
USEPA Id Number Of Company Shipped To 2:	Not reported
Off-Site Management Method 2:	Not reported
Quantity Shipped Off-Site 2 [Assumed Decimal 999999999.9]:	0000000000
USEPA Id Number Of Company Shipped To 3:	Not reported
Off-Site Management Method 3:	Not reported
Quantity Shipped Off-Site 3 [Assumed Decimal 999999999.9]:	0000000000
USEPA Id Number Of Company Shipped To 4:	Not reported
Off-Site Management Method 4:	Not reported
Quantity Shipped Off-Site 4 [Assumed Decimal 999999999.9]:	0000000000
USEPA Id Number Of Company Shipped To 5:	Not reported
Off-Site Management Method 5:	Not reported
Quantity Shipped Off-Site 5 [Assumed Decimal 999999999.9]:	0000000000
Comment Indicator Comments No Part Of File:	N
Y=After Review Override Normal Density Exceptions:	Not reported
Error Flag:	Not reported
Entry Date:	05/16/11
Last Change Date:	00/00/00
Previous Change Date:	00/00/00
Year:	2012
USEPA Id Number Of Company Submitting Report:	ILD025316126
BOL Inventory Num Of Company Submitting Report:	0316710001
EPA Hazardous Waste Code:	D002
EPA Hazardous Waste Code:	Not reported
EPA Hazardous Waste Code:	Not reported
EPA Hazardous Waste Code:	Not reported
EPA Hazardous Waste Code:	Not reported
Source Code:	G01
Management Method [If Waste Is A Residual]:	Not reported
Form Code:	W603
Waste Minimization Code (X,N,S,R,Y):	X
Unit Of Measure[1-Gallon, 2-Cubic Yards, 3-Pounds]:	1
Density In Pounds Per Gallon [Assumed Decimal 999999999.9]:	1000
Quantity Generated In Current Reporting Year:	0000005500
On-Site Management Indicator:	N
On-Site Management Method 1:	Not reported
On-Site Quantity 1 [Assumed Decimal 999999999.9]:	0000000000
On-Site Management Method 2:	Not reported
On-Site Quantity 2 [Assumed Decimal 999999999.9]:	0000000000
Off-Site Shipment Indicator:	Y
USEPA Id Number Of Company Shipped To 1:	IND000646943
Off-Site Management Method 1 [Y Or N]:	H141
Quantity Shipped Off-Site 1 [Assumed Decimal 999999999.9]:	0000005500
USEPA Id Number Of Company Shipped To 2:	Not reported
Off-Site Management Method 2:	Not reported
Quantity Shipped Off-Site 2 [Assumed Decimal 999999999.9]:	0000000000
USEPA Id Number Of Company Shipped To 3:	Not reported
Off-Site Management Method 3:	Not reported

(Continued) **1008119764**

Quantity Shipped Off-Site 3 [Assumed Decimal 999999999.9]:	0000000000
USEPA Id Number Of Company Shipped To 4:	Not reported
Off-Site Management Method 4:	Not reported
Quantity Shipped Off-Site 4 [Assumed Decimal 999999999.9]:	0000000000
USEPA Id Number Of Company Shipped To 5:	Not reported
Off-Site Management Method 5:	Not reported
Quantity Shipped Off-Site 5 [Assumed Decimal 999999999.9]:	0000000000
Comment Indicator Comments No Part Of File:	N
Y=After Review Override Normal Density Exceptions:	Not reported
Error Flag:	Not reported
Entry Date:	05/16/11
Last Change Date:	00/00/00
Previous Change Date:	00/00/00
Year:	2011
USEPA Id Number Of Company Submitting Report:	ILD025316126
BOL Inventory Num Of Company Submitting Report:	0316710001
EPA Hazardous Waste Code:	D002
EPA Hazardous Waste Code:	Not reported
EPA Hazardous Waste Code:	Not reported
EPA Hazardous Waste Code:	Not reported
EPA Hazardous Waste Code:	Not reported
Source Code:	G01
Management Method [If Waste Is A Residual]:	Not reported
Form Code:	W110
Waste Minimization Code (X,N,S,R,Y):	X
Unit Of Measure[1-Gallon, 2-Cubic Yards, 3-Pounds]:	1
Density In Pounds Per Gallon [Assumed Decimal 999999999.9]:	0880
Quantity Generated In Current Reporting Year:	0000038500
On-Site Management Indicator:	N
On-Site Management Method 1:	Not reported
On-Site Quantity 1 [Assumed Decimal 999999999.9]:	0000000000
On-Site Management Method 2:	Not reported
On-Site Quantity 2 [Assumed Decimal 999999999.9]:	0000000000
Off-Site Shipment Indicator:	Y
USEPA Id Number Of Company Shipped To 1:	IND000646943
Off-Site Management Method 1 [Y Or N]:	H141
Quantity Shipped Off-Site 1 [Assumed Decimal 999999999.9]:	0000038500
USEPA Id Number Of Company Shipped To 2:	Not reported
Off-Site Management Method 2:	Not reported
Quantity Shipped Off-Site 2 [Assumed Decimal 999999999.9]:	0000000000
USEPA Id Number Of Company Shipped To 3:	Not reported
Off-Site Management Method 3:	Not reported
Quantity Shipped Off-Site 3 [Assumed Decimal 999999999.9]:	0000000000
USEPA Id Number Of Company Shipped To 4:	Not reported
Off-Site Management Method 4:	Not reported
Quantity Shipped Off-Site 4 [Assumed Decimal 999999999.9]:	0000000000
USEPA Id Number Of Company Shipped To 5:	Not reported
Off-Site Management Method 5:	Not reported
Quantity Shipped Off-Site 5 [Assumed Decimal 999999999.9]:	0000000000
Comment Indicator Comments No Part Of File:	N
Y=After Review Override Normal Density Exceptions:	Not reported
Error Flag:	Not reported
Entry Date:	03/19/12
Last Change Date:	00/00/00
Previous Change Date:	00/00/00

(Continued) **1008119764**

Year:	2012
USEPA Id Number Of Company Submitting Report:	ILD025316126
BOL Inventory Num Of Company Submitting Report:	0316710001
EPA Hazardous Waste Code:	D002
EPA Hazardous Waste Code:	Not reported
EPA Hazardous Waste Code:	Not reported
EPA Hazardous Waste Code:	Not reported
EPA Hazardous Waste Code:	Not reported
Source Code:	G01
Management Method [If Waste Is A Residual]:	Not reported
Form Code:	W110
Waste Minimization Code (X,N,S,R,Y):	X
Unit Of Measure[1-Gallon, 2-Cubic Yards, 3-Pounds]:	1
Density In Pounds Per Gallon [Assumed Decimal 999999999.9]:	0880
Quantity Generated In Current Reporting Year:	0000074250
On-Site Management Indicator:	N
On-Site Management Method 1:	Not reported
On-Site Quantity 1 [Assumed Decimal 999999999.9]:	0000000000
On-Site Management Method 2:	Not reported
On-Site Quantity 2 [Assumed Decimal 999999999.9]:	0000000000
Off-Site Shipment Indicator:	Y
USEPA Id Number Of Company Shipped To 1:	IND000646943
Off-Site Management Method 1 [Y Or N]:	H141
Quantity Shipped Off-Site 1 [Assumed Decimal 999999999.9]:	0000074250
USEPA Id Number Of Company Shipped To 2:	Not reported
Off-Site Management Method 2:	Not reported
Quantity Shipped Off-Site 2 [Assumed Decimal 999999999.9]:	0000000000
USEPA Id Number Of Company Shipped To 3:	Not reported
Off-Site Management Method 3:	Not reported
Quantity Shipped Off-Site 3 [Assumed Decimal 999999999.9]:	0000000000
USEPA Id Number Of Company Shipped To 4:	Not reported
Off-Site Management Method 4:	Not reported
Quantity Shipped Off-Site 4 [Assumed Decimal 999999999.9]:	0000000000
USEPA Id Number Of Company Shipped To 5:	Not reported
Off-Site Management Method 5:	Not reported
Quantity Shipped Off-Site 5 [Assumed Decimal 999999999.9]:	0000000000
Comment Indicator Comments No Part Of File:	N
Y=After Review Override Normal Density Exceptions:	Not reported
Error Flag:	Not reported
Entry Date:	04/19/10
Last Change Date:	07/16/10
Previous Change Date:	00/00/00

Year:	2012
USEPA Id Number Of Company Submitting Report:	ILD025316126
BOL Inventory Num Of Company Submitting Report:	0316710001
EPA Hazardous Waste Code:	D002
EPA Hazardous Waste Code:	Not reported
EPA Hazardous Waste Code:	Not reported
EPA Hazardous Waste Code:	Not reported
EPA Hazardous Waste Code:	Not reported
Source Code:	G01
Management Method [If Waste Is A Residual]:	Not reported
Form Code:	W110
Waste Minimization Code (X,N,S,R,Y):	X
Unit Of Measure[1-Gallon, 2-Cubic Yards, 3-Pounds]:	1
Density In Pounds Per Gallon [Assumed Decimal 999999999.9]:	0880

(Continued) **1008119764**

Quantity Generated In Current Reporting Year:	0000038500
On-Site Management Indicator:	N
On-Site Management Method 1:	Not reported
On-Site Quantity 1 [Assumed Decimal 999999999.9]:	0000000000
On-Site Management Method 2:	Not reported
On-Site Quantity 2 [Assumed Decimal 999999999.9]:	0000000000
Off-Site Shipment Indicator:	Y
USEPA Id Number Of Company Shipped To 1:	IND000646943
Off-Site Management Method 1 [Y Or N]:	H141
Quantity Shipped Off-Site 1 [Assumed Decimal 999999999.9]:	0000038500
USEPA Id Number Of Company Shipped To 2:	Not reported
Off-Site Management Method 2:	Not reported
Quantity Shipped Off-Site 2 [Assumed Decimal 999999999.9]:	0000000000
USEPA Id Number Of Company Shipped To 3:	Not reported
Off-Site Management Method 3:	Not reported
Quantity Shipped Off-Site 3 [Assumed Decimal 999999999.9]:	0000000000
USEPA Id Number Of Company Shipped To 4:	Not reported
Off-Site Management Method 4:	Not reported
Quantity Shipped Off-Site 4 [Assumed Decimal 999999999.9]:	0000000000
USEPA Id Number Of Company Shipped To 5:	Not reported
Off-Site Management Method 5:	Not reported
Quantity Shipped Off-Site 5 [Assumed Decimal 999999999.9]:	0000000000
Comment Indicator Comments No Part Of File:	N
Y=After Review Override Normal Density Exceptions:	Not reported
Error Flag:	Not reported
Entry Date:	03/19/12
Last Change Date:	00/00/00
Previous Change Date:	00/00/00

Click this hyperlink while viewing on your computer to access
1 additional IL Manifest Waste Mgmt: record(s) in the EDR Site Report.

Transporter Identification:

USEPA Identification Number Of Company Submitting Report:	ILD025316126
Bol Inventory Number Of Company Submitting Report:	0316710001
USEPA Identification Number Of Hauler 1:	WI0000815381
USEPA Identification Number Of Hauler 2:	Not reported
USEPA Identification Number Of Hauler 3:	Not reported
USEPA Identification Number Of Hauler 4:	Not reported
USEPA Identification Number Of Hauler 5:	Not reported
USEPA Identification Number Of Hauler 6:	Not reported
USEPA Identification Number Of Hauler 7:	Not reported
USEPA Identification Number Of Hauler 8:	Not reported
Hauler Permit Number Of Hauler 1:	UPW0508337MN
Hauler Permit Number Of Hauler 2:	Not reported
Hauler Permit Number Of Hauler 3:	Not reported
Hauler Permit Number Of Hauler 4:	Not reported
Hauler Permit Number Of Hauler 5:	Not reported
Hauler Permit Number Of Hauler 6:	Not reported
Hauler Permit Number Of Hauler 7:	Not reported
Hauler Permit Number Of Hauler 8:	Not reported
Comment Indicator [Comments Not Part Of File]:	N
Error Flag:	Not reported
Entry Date:	03/19/12
Last Change Date:	00/00/00
Previous Change Date:	00/00/00

(Continued) **1008119764**

USEPA Identification Number Of Company Submitting Report:	ILD025316126
BoI Inventory Number Of Company Submitting Report:	0316710001
USEPA Identification Number Of Hauler 1:	WI0000815381
USEPA Identification Number Of Hauler 2:	Not reported
USEPA Identification Number Of Hauler 3:	Not reported
USEPA Identification Number Of Hauler 4:	Not reported
USEPA Identification Number Of Hauler 5:	Not reported
USEPA Identification Number Of Hauler 6:	Not reported
USEPA Identification Number Of Hauler 7:	Not reported
USEPA Identification Number Of Hauler 8:	Not reported
Hauler Permit Number Of Hauler 1:	UPW0508337MN
Hauler Permit Number Of Hauler 2:	Not reported
Hauler Permit Number Of Hauler 3:	Not reported
Hauler Permit Number Of Hauler 4:	Not reported
Hauler Permit Number Of Hauler 5:	Not reported
Hauler Permit Number Of Hauler 6:	Not reported
Hauler Permit Number Of Hauler 7:	Not reported
Hauler Permit Number Of Hauler 8:	Not reported
Comment Indicator [Comments Not Part Of File]:	N
Error Flag:	Not reported
Entry Date:	03/19/12
Last Change Date:	00/00/00
Previous Change Date:	00/00/00

USEPA Identification Number Of Company Submitting Report:	ILD025316126
BoI Inventory Number Of Company Submitting Report:	0316710001
USEPA Identification Number Of Hauler 1:	WI0000815381
USEPA Identification Number Of Hauler 2:	TXR000050930
USEPA Identification Number Of Hauler 3:	WI0000815381
USEPA Identification Number Of Hauler 4:	WI0000815381
USEPA Identification Number Of Hauler 5:	Not reported
USEPA Identification Number Of Hauler 6:	Not reported
USEPA Identification Number Of Hauler 7:	Not reported
USEPA Identification Number Of Hauler 8:	Not reported
Hauler Permit Number Of Hauler 1:	UPW0508337MN
Hauler Permit Number Of Hauler 2:	UPW0151288IL
Hauler Permit Number Of Hauler 3:	UPW0508337MN
Hauler Permit Number Of Hauler 4:	UPW0508337MN
Hauler Permit Number Of Hauler 5:	Not reported
Hauler Permit Number Of Hauler 6:	Not reported
Hauler Permit Number Of Hauler 7:	Not reported
Hauler Permit Number Of Hauler 8:	Not reported
Comment Indicator [Comments Not Part Of File]:	N
Error Flag:	Not reported
Entry Date:	05/16/11
Last Change Date:	00/00/00
Previous Change Date:	00/00/00

USEPA Identification Number Of Company Submitting Report:	ILD025316126
BoI Inventory Number Of Company Submitting Report:	0316710001
USEPA Identification Number Of Hauler 1:	WI0000815381
USEPA Identification Number Of Hauler 2:	Not reported
USEPA Identification Number Of Hauler 3:	Not reported
USEPA Identification Number Of Hauler 4:	Not reported
USEPA Identification Number Of Hauler 5:	Not reported
USEPA Identification Number Of Hauler 6:	Not reported
USEPA Identification Number Of Hauler 7:	Not reported

(Continued) 1008119764

USEPA Identification Number Of Hauler 8:	Not reported
Hauler Permit Number Of Hauler 1:	UPW0508337MN
Hauler Permit Number Of Hauler 2:	Not reported
Hauler Permit Number Of Hauler 3:	Not reported
Hauler Permit Number Of Hauler 4:	Not reported
Hauler Permit Number Of Hauler 5:	Not reported
Hauler Permit Number Of Hauler 6:	Not reported
Hauler Permit Number Of Hauler 7:	Not reported
Hauler Permit Number Of Hauler 8:	Not reported
Comment Indicator [Comments Not Part Of File]:	N
Error Flag:	Not reported
Entry Date:	04/19/10
Last Change Date:	00/00/00
Previous Change Date:	00/00/00

USEPA Identification Number Of Company Submitting Report:	ILD025316126
BOL Inventory Number Of Company Submitting Report:	0316710001
RCRA Generator Status 1=Lqg,2=Sqg,3=Cesqg,4=Nongenerator:	1
LQG Status Is For Current Year Only:	Not reported
Company Is Importer Of Hazardous Waste:	N
Company Is A Mixed Waster Generator:	N
Company Is A Transporter Of Hazardous Waste:	N
Company Is A Treater, Storer Or Disposer Of Hazardous Waste:	N
Company Is A Recycler Of Hazardous Waste:	N
Company Has A Small Quantity On-Site Burner Exemption:	N
Company Has A Smelting, Melting, Refining Furnace Exemption:	N
Company Involvement With Underground Injection Control:	N
Destination Facility For Universal Waste:	N
Company Is A Used Oil Transporter:	N
Company Is A Used Oil Transfer Facility:	N
Company Is A Used Oil Processor:	N
Company Is A Used Oil Re-Refiner:	N
Company Is An Off-Specification Used Oil Burner:	N
Company Is Marketer Who Directs Shipment Of Off-Spec Use Oil	N
Company Is Marketer 1st Claims Used Oil Meets The Spaces:	N
North American Industrial Classification System Code 1:	42384
North American Industrial Classification System Code 2:	Not reported
North American Industrial Classification System Code 3:	Not reported
North American Industrial Classification System Code 4:	Not reported
Site Land Type [1-9 & Blank - See Book]:	1
Owner Type [1-9 & Blank - See Book]:	1
Date Company Became Owner:	09012003
Operator Type [1-9 & Blank - See Book]:	1
Date Company Became Operator:	09012003
Comment Indicator Comments Not Part Of File:	N
Error Flag:	Not reported
Entry Date:	04/19/10
Last Change Date:	00/00/00
Previous Change Date:	00/00/00

Waste Generation and Management:

Year:	2012
USEPA Id Number Of Company Submitting Report:	ILD025316126
BOL Inventory Num Of Company Submitting Report:	0316710001
EPA Hazardous Waste Code:	D001
EPA Hazardous Waste Code:	Not reported
EPA Hazardous Waste Code:	Not reported

(Continued) **1008119764**

EPA Hazardous Waste Code:	Not reported
EPA Hazardous Waste Code:	Not reported
Source Code:	G06
Management Method [If Waste Is A Residual]:	Not reported
Form Code:	W209
Waste Minimization Code (X,N,S,R,Y):	X
Unit Of Measure[1-Gallon, 2-Cubic Yards, 3-Pounds]:	1
Density In Pounds Per Gallon [Assumed Decimal 999999999.9]:	1100
Quantity Generated In Current Reporting Year:	0000007150
On-Site Management Indicator:	N
On-Site Management Method 1:	Not reported
On-Site Quantity 1 [Assumed Decimal 999999999.9]:	0000000000
On-Site Management Method 2:	Not reported
On-Site Quantity 2 [Assumed Decimal 999999999.9]:	0000000000
Off-Site Shipment Indicator:	Y
USEPA Id Number Of Company Shipped To 1:	IND000646943
Off-Site Management Method 1 [Y Or N]:	H061
Quantity Shipped Off-Site 1 [Assumed Decimal 999999999.9]:	0000007150
USEPA Id Number Of Company Shipped To 2:	Not reported
Off-Site Management Method 2:	Not reported
Quantity Shipped Off-Site 2 [Assumed Decimal 999999999.9]:	0000000000
USEPA Id Number Of Company Shipped To 3:	Not reported
Off-Site Management Method 3:	Not reported
Quantity Shipped Off-Site 3 [Assumed Decimal 999999999.9]:	0000000000
USEPA Id Number Of Company Shipped To 4:	Not reported
Off-Site Management Method 4:	Not reported
Quantity Shipped Off-Site 4 [Assumed Decimal 999999999.9]:	0000000000
USEPA Id Number Of Company Shipped To 5:	Not reported
Off-Site Management Method 5:	Not reported
Quantity Shipped Off-Site 5 [Assumed Decimal 999999999.9]:	0000000000
Comment Indicator Comments No Part Of File:	N
Y=After Review Override Normal Density Exceptions:	Not reported
Error Flag:	Not reported
Entry Date:	05/16/11
Last Change Date:	00/00/00
Previous Change Date:	00/00/00
Year:	2012
USEPA Id Number Of Company Submitting Report:	ILD025316126
BOL Inventory Num Of Company Submitting Report:	0316710001
EPA Hazardous Waste Code:	D002
EPA Hazardous Waste Code:	Not reported
EPA Hazardous Waste Code:	Not reported
EPA Hazardous Waste Code:	Not reported
EPA Hazardous Waste Code:	Not reported
Source Code:	G01
Management Method [If Waste Is A Residual]:	Not reported
Form Code:	W603
Waste Minimization Code (X,N,S,R,Y):	X
Unit Of Measure[1-Gallon, 2-Cubic Yards, 3-Pounds]:	1
Density In Pounds Per Gallon [Assumed Decimal 999999999.9]:	1000
Quantity Generated In Current Reporting Year:	0000005500
On-Site Management Indicator:	N
On-Site Management Method 1:	Not reported
On-Site Quantity 1 [Assumed Decimal 999999999.9]:	0000000000
On-Site Management Method 2:	Not reported
On-Site Quantity 2 [Assumed Decimal 999999999.9]:	0000000000

(Continued) **1008119764**

Off-Site Shipment Indicator:	Y
USEPA Id Number Of Company Shipped To 1:	IND000646943
Off-Site Management Method 1 [Y Or N]:	H141
Quantity Shipped Off-Site 1 [Assumed Decimal 999999999.9]:	0000005500
USEPA Id Number Of Company Shipped To 2:	Not reported
Off-Site Management Method 2:	Not reported
Quantity Shipped Off-Site 2 [Assumed Decimal 999999999.9]:	0000000000
USEPA Id Number Of Company Shipped To 3:	Not reported
Off-Site Management Method 3:	Not reported
Quantity Shipped Off-Site 3 [Assumed Decimal 999999999.9]:	0000000000
USEPA Id Number Of Company Shipped To 4:	Not reported
Off-Site Management Method 4:	Not reported
Quantity Shipped Off-Site 4 [Assumed Decimal 999999999.9]:	0000000000
USEPA Id Number Of Company Shipped To 5:	Not reported
Off-Site Management Method 5:	Not reported
Quantity Shipped Off-Site 5 [Assumed Decimal 999999999.9]:	0000000000
Comment Indicator Comments No Part Of File:	N
Y=After Review Override Normal Density Exceptions:	Not reported
Error Flag:	Not reported
Entry Date:	05/16/11
Last Change Date:	00/00/00
Previous Change Date:	00/00/00
Year:	2011
USEPA Id Number Of Company Submitting Report:	ILD025316126
BOL Inventory Num Of Company Submitting Report:	0316710001
EPA Hazardous Waste Code:	D002
EPA Hazardous Waste Code:	Not reported
EPA Hazardous Waste Code:	Not reported
EPA Hazardous Waste Code:	Not reported
EPA Hazardous Waste Code:	Not reported
Source Code:	G01
Management Method [If Waste Is A Residual]:	Not reported
Form Code:	W110
Waste Minimization Code (X,N,S,R,Y):	X
Unit Of Measure[1-Gallon, 2-Cubic Yards, 3-Pounds]:	1
Density In Pounds Per Gallon [Assumed Decimal 999999999.9]:	0880
Quantity Generated In Current Reporting Year:	0000038500
On-Site Management Indicator:	N
On-Site Management Method 1:	Not reported
On-Site Quantity 1 [Assumed Decimal 999999999.9]:	0000000000
On-Site Management Method 2:	Not reported
On-Site Quantity 2 [Assumed Decimal 999999999.9]:	0000000000
Off-Site Shipment Indicator:	Y
USEPA Id Number Of Company Shipped To 1:	IND000646943
Off-Site Management Method 1 [Y Or N]:	H141
Quantity Shipped Off-Site 1 [Assumed Decimal 999999999.9]:	0000038500
USEPA Id Number Of Company Shipped To 2:	Not reported
Off-Site Management Method 2:	Not reported
Quantity Shipped Off-Site 2 [Assumed Decimal 999999999.9]:	0000000000
USEPA Id Number Of Company Shipped To 3:	Not reported
Off-Site Management Method 3:	Not reported
Quantity Shipped Off-Site 3 [Assumed Decimal 999999999.9]:	0000000000
USEPA Id Number Of Company Shipped To 4:	Not reported
Off-Site Management Method 4:	Not reported
Quantity Shipped Off-Site 4 [Assumed Decimal 999999999.9]:	0000000000
USEPA Id Number Of Company Shipped To 5:	Not reported

(Continued) **1008119764**

Off-Site Management Method 5:	Not reported
Quantity Shipped Off-Site 5 [Assumed Decimal 999999999.9]:	0000000000
Comment Indicator Comments No Part Of File:	N
Y=After Review Override Normal Density Exceptions:	Not reported
Error Flag:	Not reported
Entry Date:	03/19/12
Last Change Date:	00/00/00
Previous Change Date:	00/00/00
Year:	2012
USEPA Id Number Of Company Submitting Report:	ILD025316126
BOL Inventory Num Of Company Submitting Report:	0316710001
EPA Hazardous Waste Code:	D002
EPA Hazardous Waste Code:	Not reported
EPA Hazardous Waste Code:	Not reported
EPA Hazardous Waste Code:	Not reported
EPA Hazardous Waste Code:	Not reported
Source Code:	G01
Management Method [If Waste Is A Residual]:	Not reported
Form Code:	W110
Waste Minimization Code (X,N,S,R,Y):	X
Unit Of Measure[1-Gallon, 2-Cubic Yards, 3-Pounds]:	1
Density In Pounds Per Gallon [Assumed Decimal 999999999.9]:	0880
Quantity Generated In Current Reporting Year:	0000074250
On-Site Management Indicator:	N
On-Site Management Method 1:	Not reported
On-Site Quantity 1 [Assumed Decimal 999999999.9]:	0000000000
On-Site Management Method 2:	Not reported
On-Site Quantity 2 [Assumed Decimal 999999999.9]:	0000000000
Off-Site Shipment Indicator:	Y
USEPA Id Number Of Company Shipped To 1:	IND000646943
Off-Site Management Method 1 [Y Or N]:	H141
Quantity Shipped Off-Site 1 [Assumed Decimal 999999999.9]:	0000074250
USEPA Id Number Of Company Shipped To 2:	Not reported
Off-Site Management Method 2:	Not reported
Quantity Shipped Off-Site 2 [Assumed Decimal 999999999.9]:	0000000000
USEPA Id Number Of Company Shipped To 3:	Not reported
Off-Site Management Method 3:	Not reported
Quantity Shipped Off-Site 3 [Assumed Decimal 999999999.9]:	0000000000
USEPA Id Number Of Company Shipped To 4:	Not reported
Off-Site Management Method 4:	Not reported
Quantity Shipped Off-Site 4 [Assumed Decimal 999999999.9]:	0000000000
USEPA Id Number Of Company Shipped To 5:	Not reported
Off-Site Management Method 5:	Not reported
Quantity Shipped Off-Site 5 [Assumed Decimal 999999999.9]:	0000000000
Comment Indicator Comments No Part Of File:	N
Y=After Review Override Normal Density Exceptions:	Not reported
Error Flag:	Not reported
Entry Date:	04/19/10
Last Change Date:	07/16/10
Previous Change Date:	00/00/00
Year:	2012
USEPA Id Number Of Company Submitting Report:	ILD025316126
BOL Inventory Num Of Company Submitting Report:	0316710001
EPA Hazardous Waste Code:	D002
EPA Hazardous Waste Code:	Not reported

(Continued) **1008119764**

EPA Hazardous Waste Code:	Not reported
EPA Hazardous Waste Code:	Not reported
EPA Hazardous Waste Code:	Not reported
Source Code:	G01
Management Method [If Waste Is A Residual]:	Not reported
Form Code:	W110
Waste Minimization Code (X,N,S,R,Y):	X
Unit Of Measure[1-Gallon, 2-Cubic Yards, 3-Pounds]:	1
Density In Pounds Per Gallon [Assumed Decimal 999999999.9]:	0880
Quantity Generated In Current Reporting Year:	0000038500
On-Site Management Indicator:	N
On-Site Management Method 1:	Not reported
On-Site Quantity 1 [Assumed Decimal 999999999.9]:	0000000000
On-Site Management Method 2:	Not reported
On-Site Quantity 2 [Assumed Decimal 999999999.9]:	0000000000
Off-Site Shipment Indicator:	Y
USEPA Id Number Of Company Shipped To 1:	IND000646943
Off-Site Management Method 1 [Y Or N]:	H141
Quantity Shipped Off-Site 1 [Assumed Decimal 999999999.9]:	0000038500
USEPA Id Number Of Company Shipped To 2:	Not reported
Off-Site Management Method 2:	Not reported
Quantity Shipped Off-Site 2 [Assumed Decimal 999999999.9]:	0000000000
USEPA Id Number Of Company Shipped To 3:	Not reported
Off-Site Management Method 3:	Not reported
Quantity Shipped Off-Site 3 [Assumed Decimal 999999999.9]:	0000000000
USEPA Id Number Of Company Shipped To 4:	Not reported
Off-Site Management Method 4:	Not reported
Quantity Shipped Off-Site 4 [Assumed Decimal 999999999.9]:	0000000000
USEPA Id Number Of Company Shipped To 5:	Not reported
Off-Site Management Method 5:	Not reported
Quantity Shipped Off-Site 5 [Assumed Decimal 999999999.9]:	0000000000
Comment Indicator Comments No Part Of File:	N
Y=After Review Override Normal Density Exceptions:	Not reported
Error Flag:	Not reported
Entry Date:	03/19/12
Last Change Date:	00/00/00
Previous Change Date:	00/00/00

Click this hyperlink while viewing on your computer to access
1 additional IL Manifest Waste Mgmt: record(s) in the EDR Site Report.

Transporter Identification:

USEPA Identification Number Of Company Submitting Report:	ILD025316126
Boi Inventory Number Of Company Submitting Report:	0316710001
USEPA Identification Number Of Hauler 1:	WI0000815381
USEPA Identification Number Of Hauler 2:	Not reported
USEPA Identification Number Of Hauler 3:	Not reported
USEPA Identification Number Of Hauler 4:	Not reported
USEPA Identification Number Of Hauler 5:	Not reported
USEPA Identification Number Of Hauler 6:	Not reported
USEPA Identification Number Of Hauler 7:	Not reported
USEPA Identification Number Of Hauler 8:	Not reported
Hauler Permit Number Of Hauler 1:	UPW0508337MN
Hauler Permit Number Of Hauler 2:	Not reported
Hauler Permit Number Of Hauler 3:	Not reported
Hauler Permit Number Of Hauler 4:	Not reported
Hauler Permit Number Of Hauler 5:	Not reported

(Continued) **1008119764**

Hauler Permit Number Of Hauler 6:	Not reported
Hauler Permit Number Of Hauler 7:	Not reported
Hauler Permit Number Of Hauler 8:	Not reported
Comment Indicator [Comments Not Part Of File]:	N
Error Flag:	Not reported
Entry Date:	03/19/12
Last Change Date:	00/00/00
Previous Change Date:	00/00/00
USEPA Identification Number Of Company Submitting Report:	ILD025316126
Bol Inventory Number Of Company Submitting Report:	0316710001
USEPA Identification Number Of Hauler 1:	WI0000815381
USEPA Identification Number Of Hauler 2:	Not reported
USEPA Identification Number Of Hauler 3:	Not reported
USEPA Identification Number Of Hauler 4:	Not reported
USEPA Identification Number Of Hauler 5:	Not reported
USEPA Identification Number Of Hauler 6:	Not reported
USEPA Identification Number Of Hauler 7:	Not reported
USEPA Identification Number Of Hauler 8:	Not reported
Hauler Permit Number Of Hauler 1:	UPW0508337MN
Hauler Permit Number Of Hauler 2:	Not reported
Hauler Permit Number Of Hauler 3:	Not reported
Hauler Permit Number Of Hauler 4:	Not reported
Hauler Permit Number Of Hauler 5:	Not reported
Hauler Permit Number Of Hauler 6:	Not reported
Hauler Permit Number Of Hauler 7:	Not reported
Hauler Permit Number Of Hauler 8:	Not reported
Comment Indicator [Comments Not Part Of File]:	N
Error Flag:	Not reported
Entry Date:	03/19/12
Last Change Date:	00/00/00
Previous Change Date:	00/00/00
USEPA Identification Number Of Company Submitting Report:	ILD025316126
Bol Inventory Number Of Company Submitting Report:	0316710001
USEPA Identification Number Of Hauler 1:	WI0000815381
USEPA Identification Number Of Hauler 2:	TXR000050930
USEPA Identification Number Of Hauler 3:	WI0000815381
USEPA Identification Number Of Hauler 4:	WI0000815381
USEPA Identification Number Of Hauler 5:	Not reported
USEPA Identification Number Of Hauler 6:	Not reported
USEPA Identification Number Of Hauler 7:	Not reported
USEPA Identification Number Of Hauler 8:	Not reported
Hauler Permit Number Of Hauler 1:	UPW0508337MN
Hauler Permit Number Of Hauler 2:	UPW0151288IL
Hauler Permit Number Of Hauler 3:	UPW0508337MN
Hauler Permit Number Of Hauler 4:	UPW0508337MN
Hauler Permit Number Of Hauler 5:	Not reported
Hauler Permit Number Of Hauler 6:	Not reported
Hauler Permit Number Of Hauler 7:	Not reported
Hauler Permit Number Of Hauler 8:	Not reported
Comment Indicator [Comments Not Part Of File]:	N
Error Flag:	Not reported
Entry Date:	05/16/11
Last Change Date:	00/00/00
Previous Change Date:	00/00/00

(Continued) **1008119764**

USEPA Identification Number Of Company Submitting Report:	ILD025316126
Bol Inventory Number Of Company Submitting Report:	0316710001
USEPA Identification Number Of Hauler 1:	WI0000815381
USEPA Identification Number Of Hauler 2:	Not reported
USEPA Identification Number Of Hauler 3:	Not reported
USEPA Identification Number Of Hauler 4:	Not reported
USEPA Identification Number Of Hauler 5:	Not reported
USEPA Identification Number Of Hauler 6:	Not reported
USEPA Identification Number Of Hauler 7:	Not reported
USEPA Identification Number Of Hauler 8:	Not reported
Hauler Permit Number Of Hauler 1:	UPW0508337MN
Hauler Permit Number Of Hauler 2:	Not reported
Hauler Permit Number Of Hauler 3:	Not reported
Hauler Permit Number Of Hauler 4:	Not reported
Hauler Permit Number Of Hauler 5:	Not reported
Hauler Permit Number Of Hauler 6:	Not reported
Hauler Permit Number Of Hauler 7:	Not reported
Hauler Permit Number Of Hauler 8:	Not reported
Comment Indicator [Comments Not Part Of File]:	N
Error Flag:	Not reported
Entry Date:	04/19/10
Last Change Date:	00/00/00
Previous Change Date:	00/00/00

USEPA Identification Number Of Company Submitting Report:	ILD025316126
BOL Inventory Number Of Company Submitting Report:	0316710001
RCRA Generator Status 1=Lqg,2=Sqg,3=Cesqg,4=Nongenerator:	1
LQG Status Is For Current Year Only:	Not reported
Company Is Importer Of Hazardous Waste:	N
Company Is A Mixed Waster Generator:	N
Company Is A Transporter Of Hazardous Waste:	N
Company Is A Treater, Storer Or Disposer Of Hazardous Waste:	N
Company Is A Recycler Of Hazardous Waste:	N
Company Has A Small Quantity On-Site Burner Exemption:	N
Company Has A Smelting, Melting, Refining Furnace Exemption:	N
Company Involvement With Underground Injection Control:	N
Destination Facility For Universal Waste:	N
Company Is A Used Oil Transporter:	N
Company Is A Used Oil Transfer Facility:	N
Company Is A Used Oil Processor:	N
Company Is A Used Oil Re-Refiner:	N
Company Is An Off-Specification Used Oil Burner:	N
Company Is Marketer Who Directs Shipment Of Off-Spec Use Oil	N
Company Is Marketer 1st Claims Used Oil Meets The Spaces:	N
North American Industrial Classification System Code 1:	332439
North American Industrial Classification System Code 2:	Not reported
North American Industrial Classification System Code 3:	Not reported
North American Industrial Classification System Code 4:	Not reported
Site Land Type [1-9 & Blank - See Book]:	1
Owner Type [1-9 & Blank - See Book]:	1
Date Company Became Owner:	09012003
Operator Type [1-9 & Blank - See Book]:	1
Date Company Became Operator:	09012003
Comment Indicator Comments Not Part Of File:	N
Error Flag:	Not reported
Entry Date:	03/19/12

(Continued) **1008119764**

Last Change Date:	00/00/00
Previous Change Date:	00/00/00
Waste Generation and Management:	
Year:	2012
USEPA Id Number Of Company Submitting Report:	ILD025316126
BOL Inventory Num Of Company Submitting Report:	0316710001
EPA Hazardous Waste Code:	D001
EPA Hazardous Waste Code:	Not reported
EPA Hazardous Waste Code:	Not reported
EPA Hazardous Waste Code:	Not reported
EPA Hazardous Waste Code:	Not reported
Source Code:	G06
Management Method [If Waste Is A Residual]:	Not reported
Form Code:	W209
Waste Minimization Code (X,N,S,R,Y):	X
Unit Of Measure[1-Gallon, 2-Cubic Yards, 3-Pounds]:	1
Density In Pounds Per Gallon [Assumed Decimal 999999999.9]:	1100
Quantity Generated In Current Reporting Year:	0000007150
On-Site Management Indicator:	N
On-Site Management Method 1:	Not reported
On-Site Quantity 1 [Assumed Decimal 999999999.9]:	0000000000
On-Site Management Method 2:	Not reported
On-Site Quantity 2 [Assumed Decimal 999999999.9]:	0000000000
Off-Site Shipment Indicator:	Y
USEPA Id Number Of Company Shipped To 1:	IND000646943
Off-Site Management Method 1 [Y Or N]:	H061
Quantity Shipped Off-Site 1 [Assumed Decimal 999999999.9]:	0000007150
USEPA Id Number Of Company Shipped To 2:	Not reported
Off-Site Management Method 2:	Not reported
Quantity Shipped Off-Site 2 [Assumed Decimal 999999999.9]:	0000000000
USEPA Id Number Of Company Shipped To 3:	Not reported
Off-Site Management Method 3:	Not reported
Quantity Shipped Off-Site 3 [Assumed Decimal 999999999.9]:	0000000000
USEPA Id Number Of Company Shipped To 4:	Not reported
Off-Site Management Method 4:	Not reported
Quantity Shipped Off-Site 4 [Assumed Decimal 999999999.9]:	0000000000
USEPA Id Number Of Company Shipped To 5:	Not reported
Off-Site Management Method 5:	Not reported
Quantity Shipped Off-Site 5 [Assumed Decimal 999999999.9]:	0000000000
Comment Indicator Comments No Part Of File:	N
Y=After Review Override Normal Density Exceptions:	Not reported
Error Flag:	Not reported
Entry Date:	05/16/11
Last Change Date:	00/00/00
Previous Change Date:	00/00/00
Year:	2012
USEPA Id Number Of Company Submitting Report:	ILD025316126
BOL Inventory Num Of Company Submitting Report:	0316710001
EPA Hazardous Waste Code:	D002
EPA Hazardous Waste Code:	Not reported
EPA Hazardous Waste Code:	Not reported
EPA Hazardous Waste Code:	Not reported
EPA Hazardous Waste Code:	Not reported
Source Code:	G01
Management Method [If Waste Is A Residual]:	Not reported
Form Code:	W603

(Continued) **1008119764**

Waste Minimization Code (X,N,S,R,Y):	X
Unit Of Measure[1-Gallon, 2-Cubic Yards, 3-Pounds]:	1
Density In Pounds Per Gallon [Assumed Decimal 999999999.9]:	1000
Quantity Generated In Current Reporting Year:	0000005500
On-Site Management Indicator:	N
On-Site Management Method 1:	Not reported
On-Site Quantity 1 [Assumed Decimal 999999999.9]:	0000000000
On-Site Management Method 2:	Not reported
On-Site Quantity 2 [Assumed Decimal 999999999.9]:	0000000000
Off-Site Shipment Indicator:	Y
USEPA Id Number Of Company Shipped To 1:	IND000646943
Off-Site Management Method 1 [Y Or N]:	H141
Quantity Shipped Off-Site 1 [Assumed Decimal 999999999.9]:	0000005500
USEPA Id Number Of Company Shipped To 2:	Not reported
Off-Site Management Method 2:	Not reported
Quantity Shipped Off-Site 2 [Assumed Decimal 999999999.9]:	0000000000
USEPA Id Number Of Company Shipped To 3:	Not reported
Off-Site Management Method 3:	Not reported
Quantity Shipped Off-Site 3 [Assumed Decimal 999999999.9]:	0000000000
USEPA Id Number Of Company Shipped To 4:	Not reported
Off-Site Management Method 4:	Not reported
Quantity Shipped Off-Site 4 [Assumed Decimal 999999999.9]:	0000000000
USEPA Id Number Of Company Shipped To 5:	Not reported
Off-Site Management Method 5:	Not reported
Quantity Shipped Off-Site 5 [Assumed Decimal 999999999.9]:	0000000000
Comment Indicator Comments No Part Of File:	N
Y=After Review Override Normal Density Exceptions:	Not reported
Error Flag:	Not reported
Entry Date:	05/16/11
Last Change Date:	00/00/00
Previous Change Date:	00/00/00
Year:	2011
USEPA Id Number Of Company Submitting Report:	ILD025316126
BOL Inventory Num Of Company Submitting Report:	0316710001
EPA Hazardous Waste Code:	D002
EPA Hazardous Waste Code:	Not reported
EPA Hazardous Waste Code:	Not reported
EPA Hazardous Waste Code:	Not reported
EPA Hazardous Waste Code:	Not reported
Source Code:	G01
Management Method [If Waste Is A Residual]:	Not reported
Form Code:	W110
Waste Minimization Code (X,N,S,R,Y):	X
Unit Of Measure[1-Gallon, 2-Cubic Yards, 3-Pounds]:	1
Density In Pounds Per Gallon [Assumed Decimal 999999999.9]:	0880
Quantity Generated In Current Reporting Year:	0000038500
On-Site Management Indicator:	N
On-Site Management Method 1:	Not reported
On-Site Quantity 1 [Assumed Decimal 999999999.9]:	0000000000
On-Site Management Method 2:	Not reported
On-Site Quantity 2 [Assumed Decimal 999999999.9]:	0000000000
Off-Site Shipment Indicator:	Y
USEPA Id Number Of Company Shipped To 1:	IND000646943
Off-Site Management Method 1 [Y Or N]:	H141
Quantity Shipped Off-Site 1 [Assumed Decimal 999999999.9]:	0000038500
USEPA Id Number Of Company Shipped To 2:	Not reported

(Continued) **1008119764**

Off-Site Management Method 2:	Not reported
Quantity Shipped Off-Site 2 [Assumed Decimal 999999999.9]:	0000000000
USEPA Id Number Of Company Shipped To 3:	Not reported
Off-Site Management Method 3:	Not reported
Quantity Shipped Off-Site 3 [Assumed Decimal 999999999.9]:	0000000000
USEPA Id Number Of Company Shipped To 4:	Not reported
Off-Site Management Method 4:	Not reported
Quantity Shipped Off-Site 4 [Assumed Decimal 999999999.9]:	0000000000
USEPA Id Number Of Company Shipped To 5:	Not reported
Off-Site Management Method 5:	Not reported
Quantity Shipped Off-Site 5 [Assumed Decimal 999999999.9]:	0000000000
Comment Indicator Comments No Part Of File:	N
Y=After Review Override Normal Density Exceptions:	Not reported
Error Flag:	Not reported
Entry Date:	03/19/12
Last Change Date:	00/00/00
Previous Change Date:	00/00/00
Year:	2012
USEPA Id Number Of Company Submitting Report:	ILD025316126
BOL Inventory Num Of Company Submitting Report:	0316710001
EPA Hazardous Waste Code:	D002
EPA Hazardous Waste Code:	Not reported
EPA Hazardous Waste Code:	Not reported
EPA Hazardous Waste Code:	Not reported
EPA Hazardous Waste Code:	Not reported
Source Code:	G01
Management Method [If Waste Is A Residual]:	Not reported
Form Code:	W110
Waste Minimization Code (X,N,S,R,Y):	X
Unit Of Measure[1-Gallon, 2-Cubic Yards, 3-Pounds]:	1
Density In Pounds Per Gallon [Assumed Decimal 999999999.9]:	0880
Quantity Generated In Current Reporting Year:	0000074250
On-Site Management Indicator:	N
On-Site Management Method 1:	Not reported
On-Site Quantity 1 [Assumed Decimal 999999999.9]:	0000000000
On-Site Management Method 2:	Not reported
On-Site Quantity 2 [Assumed Decimal 999999999.9]:	0000000000
Off-Site Shipment Indicator:	Y
USEPA Id Number Of Company Shipped To 1:	IND000646943
Off-Site Management Method 1 [Y Or N]:	H141
Quantity Shipped Off-Site 1 [Assumed Decimal 999999999.9]:	0000074250
USEPA Id Number Of Company Shipped To 2:	Not reported
Off-Site Management Method 2:	Not reported
Quantity Shipped Off-Site 2 [Assumed Decimal 999999999.9]:	0000000000
USEPA Id Number Of Company Shipped To 3:	Not reported
Off-Site Management Method 3:	Not reported
Quantity Shipped Off-Site 3 [Assumed Decimal 999999999.9]:	0000000000
USEPA Id Number Of Company Shipped To 4:	Not reported
Off-Site Management Method 4:	Not reported
Quantity Shipped Off-Site 4 [Assumed Decimal 999999999.9]:	0000000000
USEPA Id Number Of Company Shipped To 5:	Not reported
Off-Site Management Method 5:	Not reported
Quantity Shipped Off-Site 5 [Assumed Decimal 999999999.9]:	0000000000
Comment Indicator Comments No Part Of File:	N
Y=After Review Override Normal Density Exceptions:	Not reported
Error Flag:	Not reported

(Continued) **1008119764**

Entry Date:	04/19/10
Last Change Date:	07/16/10
Previous Change Date:	00/00/00
Year:	2012
USEPA Id Number Of Company Submitting Report:	ILD025316126
BOL Inventory Num Of Company Submitting Report:	0316710001
EPA Hazardous Waste Code:	D002
EPA Hazardous Waste Code:	Not reported
EPA Hazardous Waste Code:	Not reported
EPA Hazardous Waste Code:	Not reported
EPA Hazardous Waste Code:	Not reported
Source Code:	G01
Management Method [If Waste Is A Residual]:	Not reported
Form Code:	W110
Waste Minimization Code (X,N,S,R,Y):	X
Unit Of Measure[1-Gallon, 2-Cubic Yards, 3-Pounds]:	1
Density In Pounds Per Gallon [Assumed Decimal 999999999.9]:	0880
Quantity Generated In Current Reporting Year:	0000038500
On-Site Management Indicator:	N
On-Site Management Method 1:	Not reported
On-Site Quantity 1 [Assumed Decimal 999999999.9]:	0000000000
On-Site Management Method 2:	Not reported
On-Site Quantity 2 [Assumed Decimal 999999999.9]:	0000000000
Off-Site Shipment Indicator:	Y
USEPA Id Number Of Company Shipped To 1:	IND000646943
Off-Site Management Method 1 [Y Or N]:	H141
Quantity Shipped Off-Site 1 [Assumed Decimal 999999999.9]:	0000038500
USEPA Id Number Of Company Shipped To 2:	Not reported
Off-Site Management Method 2:	Not reported
Quantity Shipped Off-Site 2 [Assumed Decimal 999999999.9]:	0000000000
USEPA Id Number Of Company Shipped To 3:	Not reported
Off-Site Management Method 3:	Not reported
Quantity Shipped Off-Site 3 [Assumed Decimal 999999999.9]:	0000000000
USEPA Id Number Of Company Shipped To 4:	Not reported
Off-Site Management Method 4:	Not reported
Quantity Shipped Off-Site 4 [Assumed Decimal 999999999.9]:	0000000000
USEPA Id Number Of Company Shipped To 5:	Not reported
Off-Site Management Method 5:	Not reported
Quantity Shipped Off-Site 5 [Assumed Decimal 999999999.9]:	0000000000
Comment Indicator Comments No Part Of File:	N
Y=After Review Override Normal Density Exceptions:	Not reported
Error Flag:	Not reported
Entry Date:	03/19/12
Last Change Date:	00/00/00
Previous Change Date:	00/00/00

Click this hyperlink while viewing on your computer to access
1 additional IL Manifest Waste Mgmt: record(s) in the EDR Site Report.

Transporter Identification:

USEPA Identification Number Of Company Submitting Report:	ILD025316126
Bol Inventory Number Of Company Submitting Report:	0316710001
USEPA Identification Number Of Hauler 1:	WI0000815381
USEPA Identification Number Of Hauler 2:	Not reported
USEPA Identification Number Of Hauler 3:	Not reported
USEPA Identification Number Of Hauler 4:	Not reported

(Continued) **1008119764**

USEPA Identification Number Of Hauler 5:	Not reported
USEPA Identification Number Of Hauler 6:	Not reported
USEPA Identification Number Of Hauler 7:	Not reported
USEPA Identification Number Of Hauler 8:	Not reported
Hauler Permit Number Of Hauler 1:	UPW0508337MN
Hauler Permit Number Of Hauler 2:	Not reported
Hauler Permit Number Of Hauler 3:	Not reported
Hauler Permit Number Of Hauler 4:	Not reported
Hauler Permit Number Of Hauler 5:	Not reported
Hauler Permit Number Of Hauler 6:	Not reported
Hauler Permit Number Of Hauler 7:	Not reported
Hauler Permit Number Of Hauler 8:	Not reported
Comment Indicator [Comments Not Part Of File]:	N
Error Flag:	Not reported
Entry Date:	03/19/12
Last Change Date:	00/00/00
Previous Change Date:	00/00/00
USEPA Identification Number Of Company Submitting Report:	ILD025316126
BoI Inventory Number Of Company Submitting Report:	0316710001
USEPA Identification Number Of Hauler 1:	WI0000815381
USEPA Identification Number Of Hauler 2:	Not reported
USEPA Identification Number Of Hauler 3:	Not reported
USEPA Identification Number Of Hauler 4:	Not reported
USEPA Identification Number Of Hauler 5:	Not reported
USEPA Identification Number Of Hauler 6:	Not reported
USEPA Identification Number Of Hauler 7:	Not reported
USEPA Identification Number Of Hauler 8:	Not reported
Hauler Permit Number Of Hauler 1:	UPW0508337MN
Hauler Permit Number Of Hauler 2:	Not reported
Hauler Permit Number Of Hauler 3:	Not reported
Hauler Permit Number Of Hauler 4:	Not reported
Hauler Permit Number Of Hauler 5:	Not reported
Hauler Permit Number Of Hauler 6:	Not reported
Hauler Permit Number Of Hauler 7:	Not reported
Hauler Permit Number Of Hauler 8:	Not reported
Comment Indicator [Comments Not Part Of File]:	N
Error Flag:	Not reported
Entry Date:	03/19/12
Last Change Date:	00/00/00
Previous Change Date:	00/00/00
USEPA Identification Number Of Company Submitting Report:	ILD025316126
BoI Inventory Number Of Company Submitting Report:	0316710001
USEPA Identification Number Of Hauler 1:	WI0000815381
USEPA Identification Number Of Hauler 2:	TXR000050930
USEPA Identification Number Of Hauler 3:	WI0000815381
USEPA Identification Number Of Hauler 4:	WI0000815381
USEPA Identification Number Of Hauler 5:	Not reported
USEPA Identification Number Of Hauler 6:	Not reported
USEPA Identification Number Of Hauler 7:	Not reported
USEPA Identification Number Of Hauler 8:	Not reported
Hauler Permit Number Of Hauler 1:	UPW0508337MN
Hauler Permit Number Of Hauler 2:	UPW0151288IL
Hauler Permit Number Of Hauler 3:	UPW0508337MN
Hauler Permit Number Of Hauler 4:	UPW0508337MN
Hauler Permit Number Of Hauler 5:	Not reported

(Continued) **1008119764**

Hauler Permit Number Of Hauler 6:	Not reported
Hauler Permit Number Of Hauler 7:	Not reported
Hauler Permit Number Of Hauler 8:	Not reported
Comment Indicator [Comments Not Part Of File]:	N
Error Flag:	Not reported
Entry Date:	05/16/11
Last Change Date:	00/00/00
Previous Change Date:	00/00/00
USEPA Identification Number Of Company Submitting Report:	ILD025316126
BoI Inventory Number Of Company Submitting Report:	0316710001
USEPA Identification Number Of Hauler 1:	WI0000815381
USEPA Identification Number Of Hauler 2:	Not reported
USEPA Identification Number Of Hauler 3:	Not reported
USEPA Identification Number Of Hauler 4:	Not reported
USEPA Identification Number Of Hauler 5:	Not reported
USEPA Identification Number Of Hauler 6:	Not reported
USEPA Identification Number Of Hauler 7:	Not reported
USEPA Identification Number Of Hauler 8:	Not reported
Hauler Permit Number Of Hauler 1:	UPW0508337MN
Hauler Permit Number Of Hauler 2:	Not reported
Hauler Permit Number Of Hauler 3:	Not reported
Hauler Permit Number Of Hauler 4:	Not reported
Hauler Permit Number Of Hauler 5:	Not reported
Hauler Permit Number Of Hauler 6:	Not reported
Hauler Permit Number Of Hauler 7:	Not reported
Hauler Permit Number Of Hauler 8:	Not reported
Comment Indicator [Comments Not Part Of File]:	N
Error Flag:	Not reported
Entry Date:	04/19/10
Last Change Date:	00/00/00
Previous Change Date:	00/00/00

IL AIRS:

Facility ID:	Not reported
ID Number:	031600AXT
Year:	Not reported
Contact Name:	Not reported
Contact Title:	Not reported
Contact Tele:	Not reported
Contact Extention:	Not reported
Contact EMail:	Not reported
Contact Fax:	Not reported
Cease Operation Date:	Not reported
SIC Code:	7699
Address Type Code:	Not reported
Facility ID:	Not reported
ID Number:	031600AXT
Year:	2012
Contact Name:	Not reported
Contact Title:	Not reported
Contact Tele:	Not reported
Contact Extention:	Not reported
Contact EMail:	Not reported
Contact Fax:	Not reported

(Continued) **1008119764**

Cease Operation Date: Not reported
SIC Code: 7699
Address Type Code: Not reported

Detail:

Year: 2012
Id Num: 031600AXT
Pollutant Code: [121448]
Tons Per Year: 0.26

Year: 2012
Id Num: 031600AXT
Pollutant Code: GLYET
Tons Per Year: 8.6449

Year: 2012
Id Num: 031600AXT
Pollutant Code: FORM
Tons Per Year: 0

Year: 2012
Id Num: 031600AXT
Pollutant Code: NH3
Tons Per Year: 7.8299999999999995E-2

Year: 2012
Id Num: 031600AXT
Pollutant Code: MIBK
Tons Per Year: 0.229

Year: 2012
Id Num: 031600AXT
Pollutant Code: METHANE
Tons Per Year: 5.6300000000000003E-2

Year: 2012
Id Num: 031600AXT
Pollutant Code: N2O
Tons Per Year: 5.3800000000000001E-2

Year: 2012
Id Num: 031600AXT
Pollutant Code: MEOH
Tons Per Year: 0.232

Year: 2012
Id Num: 031600AXT
Pollutant Code: NOX
Tons Per Year: 2.4538000000000002

Year: 2012
Id Num: 031600AXT
Pollutant Code: PART
Tons Per Year: 5.6840000000000002

Year: 2012
Id Num: 031600AXT
Pollutant Code: PHENOL

(Continued) **1008119764**

Tons Per Year: 0.0522

Year: 2012
Id Num: 031600AXT
Pollutant Code: PM10
Tons Per Year: 5.6840000000000002

Year: 2012
Id Num: 031600AXT
Pollutant Code: PM2_5
Tons Per Year: 4.9370000000000003

Year: 2012
Id Num: 031600AXT
Pollutant Code: SO2
Tons Per Year: 0.0147

Year: 2012
Id Num: 031600AXT
Pollutant Code: TOLUENE
Tons Per Year: 0.2286

Year: 2012
Id Num: 031600AXT
Pollutant Code: VOM
Tons Per Year: 27.018000000000001

Year: 2012
Id Num: 031600AXT
Pollutant Code: XYLENE
Tons Per Year: 0.4603

Year: 2012
Id Num: 031600AXT
Pollutant Code: CO2
Tons Per Year: 2935.962

Year: 2012
Id Num: 031600AXT
Pollutant Code: CO
Tons Per Year: 2.0550000000000002

Facility ID: Not reported
ID Number: 031600AXT
Year: 2009
Contact Name: Not reported
Contact Title: Not reported
Contact Tele: Not reported
Contact Extention: Not reported
Contact EMail: Not reported
Contact Fax: Not reported
Cease Operation Date: Not reported
SIC Code: 7699
Address Type Code: Not reported

Detail:
Year: 2009

(Continued) **1008119764**

Id Num: 031600AXT
Pollutant Code: CO
Tons Per Year: 2.0409999999999999

Year: 2009
Id Num: 031600AXT
Pollutant Code: NOX
Tons Per Year: 2.4350000000000001

Year: 2009
Id Num: 031600AXT
Pollutant Code: PART
Tons Per Year: 4.4020000000000001

Year: 2009
Id Num: 031600AXT
Pollutant Code: VOM
Tons Per Year: 22.361000000000001

Year: 2009
Id Num: 031600AXT
Pollutant Code: TOLUENE
Tons Per Year: 0.14799999999999999

Year: 2009
Id Num: 031600AXT
Pollutant Code: XYLENE
Tons Per Year: 1.0209999999999999

Year: 2009
Id Num: 031600AXT
Pollutant Code: N2O
Tons Per Year: 5.2999999999999999E-2

Year: 2009
Id Num: 031600AXT
Pollutant Code: CO2
Tons Per Year: 2915.3220000000001

Year: 2009
Id Num: 031600AXT
Pollutant Code: GLYET
Tons Per Year: 5.2169999999999996

Year: 2009
Id Num: 031600AXT
Pollutant Code: [121448]
Tons Per Year: 0.16900000000000001

Year: 2009
Id Num: 031600AXT
Pollutant Code: PM10
Tons Per Year: 4.4020000000000001

Year: 2009
Id Num: 031600AXT
Pollutant Code: SO2

(Continued) **1008119764**

Tons Per Year: 1.4999999999999999E-2

Year: 2009
Id Num: 031600AXT
Pollutant Code: NH3
Tons Per Year: 0.078

Year: 2009
Id Num: 031600AXT
Pollutant Code: MEOH
Tons Per Year: 0.19700000000000001

Year: 2009
Id Num: 031600AXT
Pollutant Code: FORM
Tons Per Year: 2.5000000000000001E-2

Year: 2009
Id Num: 031600AXT
Pollutant Code: ETBZ
Tons Per Year: 0

Year: 2009
Id Num: 031600AXT
Pollutant Code: MIBK
Tons Per Year: 0.222

Year: 2009
Id Num: 031600AXT
Pollutant Code: METHANE
Tons Per Year: 5.6000000000000001E-2

Year: 2009
Id Num: 031600AXT
Pollutant Code: PM2_5
Tons Per Year: 3.8690000000000002

Year: 2009
Id Num: 031600AXT
Pollutant Code: PHENOL
Tons Per Year: 0.11

Year: 2009
Id Num: 031600AXT
Pollutant Code: METHANE
Tons Per Year: 5.6000000000000001E-2

Year: 2009
Id Num: 031600AXT
Pollutant Code: CO2
Tons Per Year: 2915.3220000000001

Year: 2009
Id Num: 031600AXT
Pollutant Code: XYLENE
Tons Per Year: 1.0209999999999999

(Continued) **1008119764**

Year: 2009
Id Num: 031600AXT
Pollutant Code: MIBK
Tons Per Year: 0.222

Year: 2009
Id Num: 031600AXT
Pollutant Code: [121448]
Tons Per Year: 0.16900000000000001

Year: 2009
Id Num: 031600AXT
Pollutant Code: FORM
Tons Per Year: 2.5000000000000001E-2

Year: 2009
Id Num: 031600AXT
Pollutant Code: MEOH
Tons Per Year: 0.19700000000000001

Year: 2009
Id Num: 031600AXT
Pollutant Code: VOM
Tons Per Year: 22.361000000000001

Year: 2009
Id Num: 031600AXT
Pollutant Code: TOLUENE
Tons Per Year: 0.14799999999999999

Year: 2009
Id Num: 031600AXT
Pollutant Code: SO2
Tons Per Year: 1.4999999999999999E-2

Year: 2009
Id Num: 031600AXT
Pollutant Code: PM10
Tons Per Year: 4.4020000000000001

Year: 2009
Id Num: 031600AXT
Pollutant Code: PHENOL
Tons Per Year: 0.11

Year: 2009
Id Num: 031600AXT
Pollutant Code: GLYET
Tons Per Year: 5.2169999999999996

Year: 2009
Id Num: 031600AXT
Pollutant Code: ETBZ
Tons Per Year: 0

Year: 2009
Id Num: 031600AXT

(Continued) **1008119764**

Pollutant Code: CO
Tons Per Year: 2.0409999999999999

Year: 2009
Id Num: 031600AXT
Pollutant Code: N2O
Tons Per Year: 5.2999999999999999E-2

Year: 2009
Id Num: 031600AXT
Pollutant Code: NH3
Tons Per Year: 0.078

Year: 2009
Id Num: 031600AXT
Pollutant Code: NOX
Tons Per Year: 2.4350000000000001

Year: 2009
Id Num: 031600AXT
Pollutant Code: PM2_5
Tons Per Year: 3.8690000000000002

Year: 2009
Id Num: 031600AXT
Pollutant Code: PART
Tons Per Year: 4.4020000000000001

Facility ID: Not reported
ID Number: 031600AXT
Year: 2008
Contact Name: Not reported
Contact Title: Not reported
Contact Tele: Not reported
Contact Extention: Not reported
Contact EMail: Not reported
Contact Fax: Not reported
Cease Operation Date: Not reported
SIC Code: 7699
Address Type Code: Not reported

Detail:
Year: 2008
Id Num: 031600AXT
Pollutant Code: PM2_5
Tons Per Year: 4.0824999999999996

Year: 2008
Id Num: 031600AXT
Pollutant Code: MEK
Tons Per Year: 0.77149999999999996

Year: 2008
Id Num: 031600AXT
Pollutant Code: NH3
Tons Per Year: 4.9799999999999997E-2

(Continued) **1008119764**

Year: 2008
Id Num: 031600AXT
Pollutant Code: [121448]
Tons Per Year: 0.0184

Year: 2008
Id Num: 031600AXT
Pollutant Code: FORM
Tons Per Year: 1.7899999999999999E-2

Year: 2008
Id Num: 031600AXT
Pollutant Code: ETBZ
Tons Per Year: 0

Year: 2008
Id Num: 031600AXT
Pollutant Code: TOLUENE
Tons Per Year: 0.21659999999999999

Year: 2008
Id Num: 031600AXT
Pollutant Code: XYLENE
Tons Per Year: 0.5917

Year: 2008
Id Num: 031600AXT
Pollutant Code: CO2
Tons Per Year: 2992.0740000000001

Year: 2008
Id Num: 031600AXT
Pollutant Code: VOM
Tons Per Year: 22.273

Year: 2008
Id Num: 031600AXT
Pollutant Code: PART
Tons Per Year: 4.6265000000000001

Year: 2008
Id Num: 031600AXT
Pollutant Code: PHENOL
Tons Per Year: 0.15559999999999999

Year: 2008
Id Num: 031600AXT
Pollutant Code: SO2
Tons Per Year: 1.4999999999999999E-2

Year: 2008
Id Num: 031600AXT
Pollutant Code: MEOH
Tons Per Year: 0.24959999999999999

Year: 2008
Id Num: 031600AXT

(Continued) **1008119764**

Pollutant Code: METHANE
Tons Per Year: 5.7299999999999997E-2

Year: 2008
Id Num: 031600AXT
Pollutant Code: MIBK
Tons Per Year: 0.2661

Year: 2008
Id Num: 031600AXT
Pollutant Code: N2O
Tons Per Year: 5.4800000000000001E-2

Year: 2008
Id Num: 031600AXT
Pollutant Code: CO
Tons Per Year: 2.0939999999999999

Year: 2008
Id Num: 031600AXT
Pollutant Code: GLYET
Tons Per Year: 5.8860000000000001

Year: 2008
Id Num: 031600AXT
Pollutant Code: NOX
Tons Per Year: 2.4933000000000001

Year: 2008
Id Num: 031600AXT
Pollutant Code: PM10
Tons Per Year: 4.6265000000000001

Year: 2008
Id Num: 031600AXT
Pollutant Code: MEK
Tons Per Year: 0.77149999999999996

Year: 2008
Id Num: 031600AXT
Pollutant Code: CO2
Tons Per Year: 2992.0740000000001

Year: 2008
Id Num: 031600AXT
Pollutant Code: PM2_5
Tons Per Year: 4.0824999999999996

Year: 2008
Id Num: 031600AXT
Pollutant Code: PART
Tons Per Year: 4.6265000000000001

Year: 2008
Id Num: 031600AXT
Pollutant Code: NH3
Tons Per Year: 4.9799999999999997E-2

(Continued) **1008119764**

Year: 2008
Id Num: 031600AXT
Pollutant Code: N2O
Tons Per Year: 5.4800000000000001E-2

Year: 2008
Id Num: 031600AXT
Pollutant Code: METHANE
Tons Per Year: 5.7299999999999997E-2

Year: 2008
Id Num: 031600AXT
Pollutant Code: CO
Tons Per Year: 2.0939999999999999

Year: 2008
Id Num: 031600AXT
Pollutant Code: MEOH
Tons Per Year: 0.24959999999999999

Year: 2008
Id Num: 031600AXT
Pollutant Code: PM10
Tons Per Year: 4.6265000000000001

Year: 2008
Id Num: 031600AXT
Pollutant Code: TOLUENE
Tons Per Year: 0.21659999999999999

Year: 2008
Id Num: 031600AXT
Pollutant Code: NOX
Tons Per Year: 2.4933000000000001

Year: 2008
Id Num: 031600AXT
Pollutant Code: VOM
Tons Per Year: 22.273

Year: 2008
Id Num: 031600AXT
Pollutant Code: SO2
Tons Per Year: 1.4999999999999999E-2

Year: 2008
Id Num: 031600AXT
Pollutant Code: [121448]
Tons Per Year: 0.0184

Year: 2008
Id Num: 031600AXT
Pollutant Code: FORM
Tons Per Year: 1.7899999999999999E-2

Year: 2008
Id Num: 031600AXT

(Continued) **1008119764**

Pollutant Code: GLYET
Tons Per Year: 5.8860000000000001

Year: 2008
Id Num: 031600AXT
Pollutant Code: ETBZ
Tons Per Year: 0

Year: 2008
Id Num: 031600AXT
Pollutant Code: MIBK
Tons Per Year: 0.2661

Year: 2008
Id Num: 031600AXT
Pollutant Code: PHENOL
Tons Per Year: 0.15559999999999999

Year: 2008
Id Num: 031600AXT
Pollutant Code: XYLENE
Tons Per Year: 0.5917

Facility ID: 2614
ID Number: 031600AXT
Year: 2007
Contact Name: Nate Smith
Contact Title: Not reported
Contact Tele: 773-483-5051
Contact Extention: Not reported
Contact EMail: Not reported
Contact Fax: Not reported
Cease Operation Date: Not reported
SIC Code: 7699
Address Type Code: Not reported

Facility ID: 2614
ID Number: 031600AXT
Year: 2006
Contact Name: Denise Jones
Contact Title: Not reported
Contact Tele: 773-376-8376
Contact Extention: Not reported
Contact EMail: Not reported
Contact Fax: Not reported
Cease Operation Date: Not reported
SIC Code: 7699
Address Type Code: LOC

AIRS (AFS):

Compliance and Violation Data Major Sources:
EPA plant ID: 110018163850
Plant name: MEYER INDUSTRIAL CONTAINER
Plant address: 610 W 81ST ST
CHICAGO, IL 606202511

(Continued) **1008119764**

County:	COOK
Region code:	05
Dunn & Bradst #:	025316126
Air quality cntrl region:	067
Sic code:	7699
Sic code desc:	REPAIR SERVICES, NEC
North Am. industrial classf:	811211
NAIC code description:	Consumer Electronics Repair and Maintenance
Default compliance status:	MEETING COMPLIANCE SCHEDULE
Default classification:	ACTUAL OR POTENTIAL EMISSIONS ARE ABOVE THE APPLICABLE MAJOR SOURCE THRESHOLDS
Govt facility:	ALL OTHER FACILITIES NOT OWNED OR OPERATED BY A FEDERAL, STATE, OR LOCAL GOVERNMENT
Current HPV:	ADDRESSED-EPA HAS LEAD ENFORCEMENT

BOL:

Site Id:	170000042040
Inv Num:	0316710001
Interest Name:	Meyer Industrial Container
Interest Type:	BOL
Media Code:	LAND

CHICAGO ENV:

Map Location:	610 W 81ST STCHICAGO, IL(41.74704749600045, -87.63961096799966)
Complaints:	Y
Neshaps & Demolition Notices:	Not reported
Enforcement:	Y
Inspections:	Y
Permits:	Y
Tanks:	Not reported
Holds & Lust Nfr:	Not reported
Latitude:	41.74704749600045
Longitude:	-87.63961096799966

Map Location:	610 W 81ST STCHICAGO, IL(41.74704749600045, -87.63961096799966)
Complaints:	Y
Neshaps & Demolition Notices:	Not reported
Enforcement:	Y
Inspections:	Y
Permits:	Y
Tanks:	Not reported
Holds & Lust Nfr:	Not reported
Latitude:	41.74704749600045
Longitude:	-87.63961096799966

K39
WNW
1/8-1/4
0.130 mi.
689 ft.

8204 S HALSTED ST
CHICAGO, IL 60620

EDR US Hist Auto Stat **1015647510**
N/A

Site 2 of 3 in cluster K

Relative:
Lower

Actual:
600 ft.

EDR Historical Auto Stations:

Name:	JAY LEE TOWING & AUTO REPAIR
Year:	2008
Address:	8204 S HALSTED ST

L40
NNW
1/8-1/4
0.131 mi.
694 ft.

719 W 81ST ST
CHICAGO, IL

CHICAGO ENV **S116619640**
N/A

Site 1 of 4 in cluster L

Relative:
Lower

Actual:
600 ft.

CHICAGO ENV:

Map Location:	719 W 81ST STCHICAGO, IL(41.74697259800047, -87.64226006399969)
Complaints:	Not reported
Neshaps & Demolition Notices:	Y
Enforcement:	Not reported
Inspections:	Not reported
Permits:	Not reported
Tanks:	Not reported
Holds & Lust Nfr:	Not reported
Latitude:	41.74697259800047
Longitude:	-87.64226006399969

K41
WNW
1/8-1/4
0.132 mi.
696 ft.

TEXACO PETROLEUM PRODUCTS HICKORY
8200 S HALSTED
CHICAGO, IL

EDR US Hist Auto Stat **1009075151**
N/A

Site 3 of 3 in cluster K

Relative:
Lower

Actual:
600 ft.

EDR Historical Auto Stations:

Name:	TEXACO PETROLEUM PRODUCTS HICKORY
Year:	1976
Type:	SERVICE STATIONS GASOLINE AND OIL
Name:	J LEES TOWING & AUTO REPAIR
Year:	1999
Address:	8200 S HALSTED ST
Name:	J LEES TOWING & AUTO REPAIR
Year:	2000
Address:	8200 S HALSTED ST
Name:	J LEES TOWING & AUTO REPAIR
Year:	2002
Address:	8200 S HALSTED ST
Name:	J LEES TOWING & AUTO REPAIR
Year:	2003
Address:	8200 S HALSTED ST
Name:	J LEES TOWING & AUTO REPAIR
Year:	2004

TEXACO PETROLEUM PRODUCTS HICKORY (Continued) **1009075151**

Address: 8200 S HALSTED ST

Name: JAY LEE TOWING & AUTO REPAIR
Year: 2005
Address: 8200 S HALSTED ST

Name: JAY LEE TOWING & AUTO REPAIR
Year: 2006
Address: 8200 S HALSTED ST

Name: J LEES TOWING & AUTO REPAIR
Year: 2008
Address: 8200 S HALSTED ST

Name: J LEES TOWING & AUTO REPAIR
Year: 2009
Address: 8200 S HALSTED ST

Name: J LEES TOWING & AUTO REPAIR
Year: 2010
Address: 8200 S HALSTED ST

Name: J LEES TOWING & AUTO REPAIR
Year: 2011
Address: 8200 S HALSTED ST

Name: J LEES TOWING & AUTO REPAIR
Year: 2012
Address: 8200 S HALSTED ST

L42 **CHICAGO ENV** **S116619656**
NNW **720 W 81ST ST** **N/A**
1/8-1/4 **CHICAGO, IL**
0.135 mi.
714 ft. **Site 2 of 4 in cluster L**

Relative:
Lower

Actual:
599 ft.

CHICAGO ENV:

Map Location:	720 W 81ST STCHICAGO, IL(41.74702790700047, -87.64237068199964)
Complaints:	Not reported
Neshaps & Demolition Notices:	Not reported
Enforcement:	Not reported
Inspections:	Y
Permits:	Not reported
Tanks:	Not reported
Holds & Lust Nfr:	Not reported
Latitude:	41.74702790700047
Longitude:	-87.64237068199964

M43
ENE
1/8-1/4
0.135 mi.
714 ft.

516 W 81ST PL
CHICAGO, IL

CHICAGO ENV **S116616834**
N/A

Site 1 of 4 in cluster M

Relative:
Higher

Actual:
601 ft.

CHICAGO ENV:

Map Location:	516 W 81ST PLCHICAGO, IL(41.74622822400045, -87.63731101399969)
Complaints:	Not reported
Neshaps & Demolition Notices:	Y
Enforcement:	Not reported
Inspections:	Y
Permits:	Not reported
Tanks:	Not reported
Holds & Lust Nfr:	Not reported
Latitude:	41.74622822400045
Longitude:	-87.63731101399969

I44
North
1/8-1/4
0.138 mi.
726 ft.

81ST/WALLACE AVE
CHICAGO, IL

IL NIPC **S100790174**
N/A

Site 7 of 7 in cluster I

Relative:
Lower

Actual:
596 ft.

N45
ENE
1/8-1/4
0.138 mi.
727 ft.

CARC SVC
501 W 82ND ST
CHICAGO, IL 60620

CHICAGO ENV **S113274291**
BOL **N/A**

Site 1 of 3 in cluster N

Relative:
Higher

Actual:
603 ft.

CHICAGO ENV:

Map Location:	501 W 82ND STCHICAGO, IL(41.74528326800049, -87.63625585199969)
Complaints:	Not reported
Neshaps & Demolition Notices:	Not reported
Enforcement:	Not reported
Inspections:	Not reported
Permits:	Not reported
Tanks:	Y
Holds & Lust Nfr:	Not reported
Latitude:	41.74528326800049
Longitude:	-87.63625585199969

BOL:

Site Id:	170001599429
Inv Num:	0316715196
Interest Name:	CARC Svc
Interest Type:	BOL
Media Code:	LAND

M46 **CHICAGO ENV** **S116616644**
ENE **508 W 81ST PL** **N/A**
1/8-1/4 **CHICAGO, IL**
0.139 mi.
735 ft. **Site 2 of 4 in cluster M**

Relative: CHICAGO ENV:
Higher Map Location: 508 W 81ST PLCHICAGO, IL(41.74622822400045, -87.63704022699966)
Complaints: Not reported
Actual: Neshaps & Demolition Notices: Y
601 ft. Enforcement: Not reported
Inspections: Not reported
Permits: Not reported
Tanks: Not reported
Holds & Lust Nfr: Not reported
Latitude: 41.74622822400045
Longitude: -87.63704022699966

L47 **CHICAGO ENV** **S116619729**
NNW **724 W 81ST ST** **N/A**
1/8-1/4 **CHICAGO, IL**
0.140 mi.
739 ft. **Site 3 of 4 in cluster L**

Relative: CHICAGO ENV:
Lower Map Location: 724 W 81ST STCHICAGO, IL(41.74702790700047, -87.64255043899965)
Complaints: Not reported
Actual: Neshaps & Demolition Notices: Y
598 ft. Enforcement: Not reported
Inspections: Not reported
Permits: Not reported
Tanks: Not reported
Holds & Lust Nfr: Not reported
Latitude: 41.74702790700047
Longitude: -87.64255043899965

M48 **CHICAGO ENV** **S116616525**
ENE **502 W 81ST PL** **N/A**
1/8-1/4 **CHICAGO, IL**
0.142 mi.
750 ft. **Site 3 of 4 in cluster M**

Relative: CHICAGO ENV:
Higher Map Location: 502 W 81ST PLCHICAGO, IL(41.74622913400049, -87.63670967499968)
Complaints: Not reported
Actual: Neshaps & Demolition Notices: Y
601 ft. Enforcement: Not reported
Inspections: Not reported
Permits: Not reported
Tanks: Not reported
Holds & Lust Nfr: Not reported
Latitude: 41.74622913400049
Longitude: -87.63670967499968

O49 **AUBURN PARK FILLING STATION** **EDR US Hist Auto Stat** **1009096421**
WNW **8155 S HALSTED** **N/A**
1/8-1/4 **CHICAGO, IL**
0.143 mi.
755 ft. **Site 1 of 6 in cluster O**

Relative: **Lower**
Actual: **600 ft.**

EDR Historical Auto Stations:

Name:	AUBURN PARK FILLING STATION
Year:	1928
Type:	GASOLINE AND OIL SERVICE STATIONS

M50 **CHICAGO ENV** **S116616465**
ENE **500 W 81ST PL** **N/A**
1/8-1/4 **CHICAGO, IL**
0.143 mi.
756 ft. **Site 4 of 4 in cluster M**

Relative: **Higher**
Actual: **601 ft.**

CHICAGO ENV:

Map Location:	500 W 81ST PLCHICAGO, IL(41.74622822400045, -87.63676022199968)
Complaints:	Y
Neshaps & Demolition Notices:	Not reported
Enforcement:	Y
Inspections:	Y
Permits:	Not reported
Tanks:	Not reported
Holds & Lust Nfr:	Not reported
Latitude:	41.74622822400045
Longitude:	-87.63676022199968

O51 **AUBURN AUTO REPAIR CO** **EDR US Hist Auto Stat** **1009105260**
WNW **8147 S HALSTED** **N/A**
1/8-1/4 **CHICAGO, IL**
0.147 mi.
776 ft. **Site 2 of 6 in cluster O**

Relative: **Lower**
Actual: **600 ft.**

EDR Historical Auto Stations:

Name:	FRANCIS FRANK F
Year:	1923
Type:	AUTOMOBILE REPAIRING
Name:	AUBURN AUTO REPAIR CO
Year:	1928
Type:	AUTOMOBILE REPAIRING

O52 **TOUMAH, YASSER** **LUST** **S105958696**
WNW **8158 SOUTH HALSTED ST.** **N/A**
1/8-1/4 **CHICAGO, IL 60620**
0.149 mi.
786 ft. **Site 3 of 6 in cluster O**

Relative: **Lower**
Actual: **600 ft.**

LUST:

Incident Num:	20031151
IL EPA Id:	0316715186
Product:	Gasoline
IEMA Date:	08/04/2003
Project Manager:	Davis
Project Manager Phone:	(217) 785-7492

TOUMAH, YASSER (Continued) **S105958696**

Email:	Valerie.A.Davis@illinois.gov
PRP Name:	Not reported
PRP Contact:	Not reported
PRP Address:	Not reported
PRP City,St,Zip:	Not reported
PRP Phone:	Not reported
Site Classification:	Not reported
Section 57.5(g) Letter:	P.A.
Date Section 57.5(g) Letter:	01/13/2004
Non LUST Determination Letter:	Not reported
20 Report Received:	Not reported
45 Report Received:	Not reported
NFA/NFR Letter:	**Not reported**
NFR Date Recorded:	Not reported

O53 **EDR US Hist Auto Stat** **1015645676**
WNW **8158 S HALSTED ST** **N/A**
1/8-1/4 **CHICAGO, IL 60620**
0.149 mi.
786 ft. **Site 4 of 6 in cluster O**

Relative:
Lower

Actual:
600 ft.

EDR Historical Auto Stations:

Name:	QUALITY AUTO REPAIR
Year:	2001
Address:	8158 S HALSTED ST
Name:	AMM MARATHON INC
Year:	2004
Address:	8158 S HALSTED ST
Name:	AMM MARATHON INC
Year:	2005
Address:	8158 S HALSTED ST
Name:	AMM MARATHON INC
Year:	2006
Address:	8158 S HALSTED ST
Name:	AMM MARATHON INC
Year:	2007
Address:	8158 S HALSTED ST
Name:	AMM MARATHON INC
Year:	2008
Address:	8158 S HALSTED ST
Name:	AMM MARATHON INC
Year:	2009
Address:	8158 S HALSTED ST
Name:	AMM MARATHON INC
Year:	2010
Address:	8158 S HALSTED ST
Name:	AMM MARATHON INC
Year:	2011
Address:	8158 S HALSTED ST

(Continued) **1015645676**

Name: AMM MARATHON INC
Year: 2012
Address: 8158 S HALSTED ST

O54 **AMM MARATHON, INC.** **UST** **U003907984**
WNW **8158 S. HALSTED** **N/A**
1/8-1/4 **CHICAGO, IL 60620**
0.149 mi.
786 ft. **Site 5 of 6 in cluster O**

Relative: UST:
Lower
Facility ID: 2041669
Facility Status: ACTIVE
Actual: **Facility Type:** **SELF-SERVICE STATION**
600 ft. Owner Id: U0030427
Owner Name: Yasser Toumah
Owner Address: 10145 S 87th Ave
Owner City,St,Zip: Palos Hills, IL 60465

Tank Number: 1
Tank Status: **Exempt from registration**
Tank Capacity: 5000
Tank Substance: Gasoline
Last Used Date: 12/31/1973
OSFM First Notify Date: Not reported
Red Tag Issue Date: Not reported
Install Date: Not reported
Green Tag Decal: **O000131**
Green Tag Issue Date: **5/31/2013**
Green Tag Expire Date: **12/31/2015**
Fee Due: Not reported
MOTOR FUEL PERMIT INSPECTION DATE: 2013
MOTOR FUEL PERMIT EXPIRATION DATE: 2015
MOTOR FUEL TYPE: SelfSrv
Pending Nov: N
IEMA: 2003-1151
Equipment Type: Not reported
Equipment: Not reported
Last Passing Date: Not reported
Test Expire Date: Not reported

Tank Number: 2
Tank Status: **Exempt from registration**
Tank Capacity: 4000
Tank Substance: Gasoline
Last Used Date: 12/31/1973
OSFM First Notify Date: Not reported
Red Tag Issue Date: Not reported
Install Date: Not reported
Green Tag Decal: **O000131**
Green Tag Issue Date: **5/31/2013**
Green Tag Expire Date: **12/31/2015**
Fee Due: Not reported
MOTOR FUEL PERMIT INSPECTION DATE: 2013
MOTOR FUEL PERMIT EXPIRATION DATE: 2015
MOTOR FUEL TYPE: SelfSrv
Pending Nov: N

AMM MARATHON, INC. (Continued) **U003907984**

IEMA: Not reported
Equipment Type: Not reported
Equipment: Not reported
Last Passing Date: Not reported
Test Expire Date: Not reported

Tank Number: 3
Tank Status: Exempt from registration
Tank Capacity: 4000
Tank Substance: Gasoline
Last Used Date: 12/31/1973
OSFM First Notify Date: Not reported
Red Tag Issue Date: Not reported
Install Date: Not reported
Green Tag Decal: O000131
Green Tag Issue Date: 5/31/2013
Green Tag Expire Date: 12/31/2015
Fee Due: Not reported
MOTOR FUEL PERMIT INSPECTION DATE: 2013
MOTOR FUEL PERMIT EXPIRATION DATE: 2015
MOTOR FUEL TYPE: SelfSrv
Pending Nov: N
IEMA: Not reported
Equipment Type: Not reported
Equipment: Not reported
Last Passing Date: Not reported
Test Expire Date: Not reported

Tank Number: 4
Tank Status: Exempt from registration
Tank Capacity: 4000
Tank Substance: Gasoline
Last Used Date: 12/31/1973
OSFM First Notify Date: Not reported
Red Tag Issue Date: Not reported
Install Date: Not reported
Green Tag Decal: O000131
Green Tag Issue Date: 5/31/2013
Green Tag Expire Date: 12/31/2015
Fee Due: Not reported
MOTOR FUEL PERMIT INSPECTION DATE: 2013
MOTOR FUEL PERMIT EXPIRATION DATE: 2015
MOTOR FUEL TYPE: SelfSrv
Pending Nov: N
IEMA: Not reported
Equipment Type: Not reported
Equipment: Not reported
Last Passing Date: Not reported
Test Expire Date: Not reported

Tank Number: 5
Tank Status: Does Not Exist
Tank Capacity: 6000
Tank Substance: Gasoline

AMM MARATHON, INC. (Continued) **U003907984**

Last Used Date:	Not reported
OSFM First Notify Date:	Not reported
Red Tag Issue Date:	Not reported
Install Date:	Not reported
Green Tag Decal:	**O000131**
Green Tag Issue Date:	**5/31/2013**
Green Tag Expire Date:	**12/31/2015**
Fee Due:	Not reported
MOTOR FUEL PERMIT INSPECTION DATE:	5/31/2013
MOTOR FUEL PERMIT EXPIRATION DATE:	12/31/2015
MOTOR FUEL TYPE:	SelfSrv
Pending Nov:	N
IEMA:	Not reported
Equipment Type:	Not reported
Equipment:	Not reported
Last Passing Date:	Not reported
Test Expire Date:	Not reported

Tank Number:	6
Tank Status:	**Currently in use**
Tank Capacity:	8000
Tank Substance:	Gasoline
Last Used Date:	Not reported
OSFM First Notify Date:	5/21/2004
Red Tag Issue Date:	Not reported
Install Date:	6/20/2003
Green Tag Decal:	**O000131**
Green Tag Issue Date:	**5/31/2013**
Green Tag Expire Date:	**12/31/2015**
Fee Due:	$0.00
MOTOR FUEL PERMIT INSPECTION DATE:	5/31/2013
MOTOR FUEL PERMIT EXPIRATION DATE:	12/31/2015
MOTOR FUEL TYPE:	SelfSrv
Pending Nov:	N
IEMA:	Not reported
Equipment Type:	Corrosion Prot - Piping
Equipment:	Fiberglass Non-Corrosive
Last Passing Date:	N/A
Test Expire Date:	N/A

Tank Number:	7
Tank Status:	**Currently in use**
Tank Capacity:	12000
Tank Substance:	Gasoline
Last Used Date:	Not reported
OSFM First Notify Date:	5/21/2004
Red Tag Issue Date:	Not reported
Install Date:	6/20/2003
Green Tag Decal:	**O000131**
Green Tag Issue Date:	**5/31/2013**
Green Tag Expire Date:	**12/31/2015**
Fee Due:	$0.00
MOTOR FUEL PERMIT INSPECTION DATE:	5/31/2013
MOTOR FUEL PERMIT EXPIRATION DATE:	12/31/2015
MOTOR FUEL TYPE:	SelfSrv

AMM MARATHON, INC. (Continued) **U003907984**

Pending Nov:	N
IEMA:	Not reported
Equipment Type:	Corrosion Prot - Piping
Equipment:	Fiberglass Non-Corrosive
Last Passing Date:	N/A
Test Expire Date:	N/A

Tank Number:	8
Tank Status:	**Exempt from registration**
Tank Capacity:	2000
Tank Substance:	Gasoline
Last Used Date:	12/31/1973
OSFM First Notify Date:	Not reported
Red Tag Issue Date:	Not reported
Install Date:	Not reported
Green Tag Decal:	**O000131**
Green Tag Issue Date:	**5/31/2013**
Green Tag Expire Date:	**12/31/2015**
Fee Due:	Not reported
MOTOR FUEL PERMIT INSPECTION DATE:	5/31/2013
MOTOR FUEL PERMIT EXPIRATION DATE:	12/31/2015
MOTOR FUEL TYPE:	SelfSrv
Pending Nov:	N
IEMA:	Not reported
Equipment Type:	Not reported
Equipment:	Not reported
Last Passing Date:	Not reported
Test Expire Date:	Not reported

O55 **EDR US Hist Cleaners** **1015098621**
WNW **8156 S HALSTED ST** **N/A**
1/8-1/4 **CHICAGO, IL 60620**
0.150 mi.
790 ft. **Site 6 of 6 in cluster O**

Relative:
Lower

Actual:
600 ft.

EDR Historical Cleaners:

Name:	AMM EASY WASH INC
Year:	2010
Address:	8156 S HALSTED ST
Name:	AMM EASY WASH INC
Year:	2011
Address:	8156 S HALSTED ST
Name:	AMM EASY WASH INC
Year:	2012
Address:	8156 S HALSTED ST

L56
NW
1/8-1/4
0.151 mi.
795 ft.

741 W 81ST ST
CHICAGO, IL

Site 4 of 4 in cluster L

CHICAGO ENV **S116619935**
N/A

Relative:
Lower

Actual:
596 ft.

CHICAGO ENV:

Map Location:	741 W 81ST STCHICAGO, IL(41.74697259800047, -87.64315077799967)
Complaints:	Not reported
Neshaps & Demolition Notices:	Y
Enforcement:	Not reported
Inspections:	Not reported
Permits:	Not reported
Tanks:	Not reported
Holds & Lust Nfr:	Not reported
Latitude:	41.74697259800047
Longitude:	-87.64315077799967

N57
ENE
1/8-1/4
0.154 mi.
812 ft.

452 W 82ND ST
CHICAGO, IL

Site 2 of 3 in cluster N

CHICAGO ENV **S116615796**
N/A

Relative:
Higher

Actual:
601 ft.

CHICAGO ENV:

Map Location:	452 W 82ND STCHICAGO, IL(41.74533751000047, -87.63618984299967)
Complaints:	Not reported
Neshaps & Demolition Notices:	Y
Enforcement:	Not reported
Inspections:	Not reported
Permits:	Not reported
Tanks:	Not reported
Holds & Lust Nfr:	Not reported
Latitude:	41.74533751000047
Longitude:	-87.63618984299967

58
South
1/8-1/4
0.161 mi.
851 ft.

MORGAN
8407 S KERFOOT AVE
CHICAGO, IL 60620

RCRA-SQG **1001116743**
FINDS **ILR000027680**

Relative:
Higher

Actual:
601 ft.

RCRA-SQG:

Date form received by agency:	09/17/1996
Facility name:	MORGAN SCHOOL
Facility address:	8407 S KERFOOT AVE CHICAGO, IL 60620
EPA ID:	ILR000027680
Mailing address:	8407 S KERFOOT CHICAGO, IL 60620
Contact:	INEZ WALTON
Contact address:	8407 S KERFOOT AVE CHICAGO, IL 60620
Contact country:	US
Contact telephone:	(312) 535-3366
Contact email:	Not reported
EPA Region:	05
Classification:	Small Small Quantity Generator

MORGAN (Continued) **1001116743**

Description: Handler: generates more than 100 and less than 1000 kg of hazardous waste during any calendar month and accumulates less than 6000 kg of hazardous waste at any time; or generates 100 kg or less of hazardous waste during any calendar month, and accumulates more than 1000 kg of hazardous waste at any time

Owner/Operator Summary:
Owner/operator name: CHICAGO PUBLIC SCHOOLS 6WN
Owner/operator address: 1819 W PERSHING RD
CHICAGO, IL 60609
Owner/operator country: Not reported
Owner/operator telephone: (312) 535-7039
Legal status: Municipal
Owner/Operator Type: Owner
Owner/Op start date: Not reported
Owner/Op end date: Not reported

Handler Activities Summary:
U.S. importer of hazardous waste: No
Mixed waste (haz. and radioactive): No
Recycler of hazardous waste: No
Transporter of hazardous waste: No
Treater, storer or disposer of HW: No
Underground injection activity: No
On-site burner exemption: No
Furnace exemption: No
Used oil fuel burner: No
Used oil processor: No
User oil refiner: No
Used oil fuel marketer to burner: No
Used oil Specification marketer: No
Used oil transfer facility: No
Used oil transporter: No

Hazardous Waste Summary:
Waste code: D008
Waste name: LEAD

Violation Status: No violations found

FINDS:

Registry ID: 110005948341

Environmental Interest/Information System
ACES (Illinois - Agency Compliance And Enforcement System) is the Illinois EPA Project to facilitate the permitting operations

RCRAInfo is a national information system that supports the Resource Conservation and Recovery Act (RCRA) program through the tracking of events and activities related to facilities that generate, transport, and treat, store, or dispose of hazardous waste. RCRAInfo allows RCRA program staff to track the notification, permit, compliance, and corrective action activities required under RCRA.

P59 **SIMEON VOCATIONAL HIGH SCHOOL** **RCRA-CESQG** **1004696763**
East **8235 S VINCENNES AVE** **FINDS** **ILR000057547**
1/8-1/4 **CHICAGO, IL 60620**
0.170 mi.
897 ft. **Site 1 of 2 in cluster P**

Relative:
Higher

Actual:
601 ft.

RCRA-CESQG:
Date form received by agency: 11/04/1998
Facility name: SIMEON VOCATIONAL HIGH SCHOOL
Facility address: 8235 S VINCENNES AVE
CHICAGO, IL 60620
EPA ID: ILR000057547
Mailing address: 8501 W 191ST ST
PO BOX 10
MOKENA, IL 60448
Contact: THOMAS CONNELLY
Contact address: 8501 W 191ST ST PO BOX 10
MOKENA, IL 60448
Contact country: US
Contact telephone: (704) 923-0202
Contact email: Not reported
EPA Region: 05
Classification: Conditionally Exempt Small Quantity Generator
Description: Handler: generates 100 kg or less of hazardous waste per calendar month, and accumulates 1000 kg or less of hazardous waste at any time; or generates 1 kg or less of acutely hazardous waste per calendar month, and accumulates at any time: 1 kg or less of acutely hazardous waste; or 100 kg or less of any residue or contaminated soil, waste or other debris resulting from the cleanup of a spill, into or on any land or water, of acutely hazardous waste; or generates 100 kg or less of any residue or contaminated soil, waste or other debris resulting from the cleanup of a spill, into or on any land or water, of acutely hazardous waste during any calendar month, and accumulates at any time: 1 kg or less of acutely hazardous waste; or 100 kg or less of any residue or contaminated soil, waste or other debris resulting from the cleanup of a spill, into or on any land or water, of acutely hazardous waste

Owner/Operator Summary:
Owner/operator name: CHICAGO PUBLIC SCHOOLS
Owner/operator address: 1819 W PERSHING RD 6WW
CHICAGO, IL 60609
Owner/operator country: Not reported
Owner/operator telephone: (773) 535-7038
Legal status: District
Owner/Operator Type: Owner
Owner/Op start date: Not reported
Owner/Op end date: Not reported

Handler Activities Summary:
U.S. importer of hazardous waste: No
Mixed waste (haz. and radioactive): No
Recycler of hazardous waste: No
Transporter of hazardous waste: No
Treater, storer or disposer of HW: No
Underground injection activity: No
On-site burner exemption: No
Furnace exemption: No

SIMEON VOCATIONAL HIGH SCHOOL (Continued) **1004696763**

Used oil fuel burner: No
Used oil processor: No
User oil refiner: No
Used oil fuel marketer to burner: No
Used oil Specification marketer: No
Used oil transfer facility: No
Used oil transporter: No

Hazardous Waste Summary:
Waste code: D006
Waste name: CADMIUM

Waste code: D008
Waste name: LEAD

Waste code: D009
Waste name: MERCURY

Violation Status: No violations found

FINDS:

Registry ID: 110003046089

Environmental Interest/Information System
ACES (Illinois - Agency Compliance And Enforcement System) is the Illinois EPA Project to facilitate the permitting operations

RCRAInfo is a national information system that supports the Resource Conservation and Recovery Act (RCRA) program through the tracking of events and activities related to facilities that generate, transport, and treat, store, or dispose of hazardous waste. RCRAInfo allows RCRA program staff to track the notification, permit, compliance, and corrective action activities required under RCRA.

P60 **SIMEON SCHOOL** **UST** **U003929759**
East **8233 S VINCENNES** **N/A**
1/8-1/4 **CHICAGO, IL 60620**
0.170 mi.
900 ft. **Site 2 of 2 in cluster P**

Relative:
Higher

Actual:
601 ft.

UST:
Facility ID: 2041912
Facility Status: EXEMPT
Facility Type: **SCHOOL/COLLEGE**
Owner Id: U0028539
Owner Name: Public Building Commission of Chicago
Owner Address: 50 W. Washington Street, Suite 200 Richard J. Daley Center
Owner City,St,Zip: Chicago, IL 60602

Tank Number: 1
Tank Status: **Exempt from registration**
Tank Capacity: 20000
Tank Substance: Heating Oil
Last Used Date: 12/31/1973
OSFM First Notify Date: 11/17/2003
Red Tag Issue Date: Not reported

SIMEON SCHOOL (Continued) **U003929759**

Install Date:	Not reported
Green Tag Decal:	**Not reported**
Green Tag Issue Date:	**Not reported**
Green Tag Expire Date:	**Not reported**
Fee Due:	Not reported
MOTOR FUEL PERMIT INSPECTION DATE:	Not reported
MOTOR FUEL PERMIT EXPIRATION DATE:	Not reported
MOTOR FUEL TYPE:	Not reported
Pending Nov:	N
IEMA:	Not reported
Equipment Type:	Not reported
Equipment:	Not reported
Last Passing Date:	Not reported
Test Expire Date:	Not reported

Q61 **CHICAGO ENV** **S116616649**
NE **509 W 81ST ST** **N/A**
1/8-1/4 **CHICAGO, IL**
0.173 mi.
911 ft. **Site 1 of 2 in cluster Q**

Relative: **Lower**
Actual: **598 ft.**

CHICAGO ENV:

Map Location:	509 W 81ST STCHICAGO, IL(41.7461729150005, -87.63703100899966)
Complaints:	Not reported
Neshaps & Demolition Notices:	Y
Enforcement:	Not reported
Inspections:	Not reported
Permits:	Not reported
Tanks:	Not reported
Holds & Lust Nfr:	Not reported
Latitude:	41.7461729150005
Longitude:	-87.63703100899966

N62 **SIMEON CAREER ACADEMY PARKING LOT** **ENG CONTROLS** **S105424227**
East **8221 SOUTH VINCENNES AVENUE** **SRP** **N/A**
1/8-1/4 **CHICAGO, IL 60620**
0.173 mi.
916 ft. **Site 3 of 3 in cluster N**

Relative: **Higher**
Actual: **601 ft.**

ENGINEERING CONTROLS:

Illinois Epa Id:	0316715172
NFR Letter:	08/30/2004
Date NFR Recorded:	09/09/2004
Type Of Site:	Residential
Comprehensive / Focused:	Not reported
Remediation Applicant Title:	Ms.
Remediation Applicant Name:	Lynn Crivello
RA Company:	Chicago Public Schools
RA Address:	125 South Clark Street
RA Secondary Address:	16th Floor
RA City,St,Zip:	Chicago, IL 60603-
Institutional Controls:	Not reported
Engineered Barriers:	Gravel barrier/Concrete barrier/Gravel and Geotextile barrier
Worker Caution:	True
Acres:	2.299

SIMEON CAREER ACADEMY PARKING LOT (Continued) **S105424227**

SRP:

IL EPA Id:	0316715172
US EPA Id:	Not reported
Longitude:	-87.63515
Latitude:	41.74475
Contact Name:	Lynn Crivello
Contact Address:	125 South Clark Street
Contact Address2:	17th Floor
Contact City,St,Zip:	Chicago, IL 60603-
Contact Phone:	(773) 553-3113
Date Enrolled:	03/18/2002
Point Of Contact:	Michael R. Duet, P.E. Duet
Consultant Company:	Camow, Conibear & Associates, Ltd.
Consultant Address:	600 West Van Buren Street
Consultant Address2:	Suite 500
Consultant City,St,Zip:	Chicago, IL 60607-
Consultant Phone:	(312) 762-2908
Proj Mgr Assigned:	Irwin
Sec. 4 Letter Date:	Not reported
NFR Recorded:	09/09/2004
Active:	False
Total Acres:	2.299
No Further Remediation Letter Dt:	08/30/2004
Remediation Applicant Co:	Chicago Public Schools
Remediation Applicant Title:	Ms.
Remediation Applicant Name:	Ms. Lynn Crivello
Remediation Applicant Company:	Chicago Public Schools
Remediation Applicant Address:	125 South Clark Street
Remediation Applicant Address 2:	16th Floor
Remediation Applicant City,St,Zip:	Chicago, IL 60603-
Illinois EPA:	0316715172
Site Name:	Simeon Career Academy Parking Lot
NFR Letter:	2004-08-30
NFR Letter Date Recorded:	2004-09-09
Site Type:	Residential
Comprehensive/Focused:	Not reported
Institutional Controls:	Not reported
Barrier:	Gravel barrier/Concrete barrier/Gravel and Geotextile barrier
Worker Caution:	True
Acres:	2.299

R63 **CHICAGO ENV** **S116620330**
SW **806 W 84TH ST** **N/A**
1/8-1/4 **CHICAGO, IL**
0.175 mi.
924 ft. **Site 1 of 3 in cluster R**

Relative:
Higher

Actual:
607 ft.

CHICAGO ENV:

Map Location:	806 W 84TH STCHICAGO, IL(41.741557152000496, -87.64412480199968)
Complaints:	Not reported
Neshaps & Demolition Notices:	Not reported
Enforcement:	Not reported
Inspections:	Not reported
Permits:	Not reported
Tanks:	Y
Holds & Lust Nfr:	Not reported

(Continued) S116620330

Latitude: 41.741557152000496
Longitude: -87.64412480199968

Q64
NE
1/8-1/4
0.175 mi.
926 ft.

506 W 81ST ST
CHICAGO, IL

Site 2 of 2 in cluster Q

CHICAGO ENV: **CHICAGO ENV** **S116616623**
N/A

Relative:
Lower

Actual:
598 ft.

Map Location:	506 W 81ST STCHICAGO, IL(41.74622822400045, -87.63694113099967)
Complaints:	Not reported
Neshaps & Demolition Notices:	Y
Enforcement:	Not reported
Inspections:	Not reported
Permits:	Not reported
Tanks:	Not reported
Holds & Lust Nfr:	Not reported
Latitude:	41.74622822400045
Longitude:	-87.63694113099967

S65
NW
1/8-1/4
0.176 mi.
928 ft.

ENGLEWOOD CLNRS
8104 S HALSTED
CHICAGO, IL

Site 1 of 3 in cluster S

EDR US Hist Cleaners **1009204766**
N/A

Relative:
Lower

Actual:
596 ft.

EDR Historical Cleaners:

Name:	ENGLEWOOD CLNRS
Year:	1928
Type:	CLEANERS GARMENTS CURTAINS AND DRAPERIES

S66
NW
1/8-1/4
0.179 mi.
945 ft.

GREER S STANDARD SERVICE STA
8100 S HALSTED PKWY
CHICAGO, IL

Site 2 of 3 in cluster S

EDR US Hist Auto Stat **1009076044**
N/A

Relative:
Lower

Actual:
596 ft.

EDR Historical Auto Stations:

Name:	GREER S STANDARD SERVICE STA
Year:	1981
Type:	SERVICE STATIONS GASOLINE AND OIL

R67
SW
1/8-1/4
0.181 mi.
955 ft.

8408 S HALSTED ST
CHICAGO, IL 60620

Site 2 of 3 in cluster R

EDR US Hist Auto Stat **1015653292**
N/A

Relative:
Higher

Actual:
608 ft.

EDR Historical Auto Stations:

Name:	WEST AUTO REPAIR
Year:	2003
Address:	8408 S HALSTED ST

S68 **CHICAGO ENV** **S116620306**
NW **801 W 81ST ST** **N/A**
1/8-1/4 **CHICAGO, IL**
0.186 mi.
982 ft. **Site 3 of 3 in cluster S**

Relative: **Lower**

Actual: **596 ft.**

CHICAGO ENV:

Map Location:	801 W 81ST STCHICAGO, IL(41.74695988600047, -87.64405719199965)
Complaints:	Not reported
Neshaps & Demolition Notices:	Not reported
Enforcement:	Not reported
Inspections:	Y
Permits:	Not reported
Tanks:	Not reported
Holds & Lust Nfr:	Not reported
Latitude:	41.74695988600047
Longitude:	-87.64405719199965

R69 **95 HALSTEAD, INC.** **LUST** **S104529205**
SW **8420 SOUTH HALSTED** **N/A**
1/8-1/4 **CHICAGO, IL 60620**
0.197 mi.
1041 ft. **Site 3 of 3 in cluster R**

Relative: **Higher**

Actual: **608 ft.**

LUST:

Incident Num:	982801
IL EPA Id:	0316715137
Product:	Gasoline, Other Petro
IEMA Date:	11/12/1998
Project Manager:	McGill
Project Manager Phone:	(217) 524-5137
Email:	Scott.McGill@illinois.gov
PRP Name:	95 Halstead, Inc.
PRP Contact:	Eugene Faicus
PRP Address:	400 Skokie Blvd, Suite 415
PRP City,St,Zip:	Northbrook, IL 60062
PRP Phone:	8472055554
Site Classification:	Not reported
Section 57.5(g) Letter:	732
Date Section 57.5(g) Letter:	Not reported
Non LUST Determination Letter:	Not reported
20 Report Received:	02/18/1999
45 Report Received:	02/18/1999
NFA/NFR Letter:	**08/23/1999**
NFR Date Recorded:	12/29/1999

---

70 **SOUTH SIDE AUTO SHOP** **EDR US Hist Auto Stat** **1009113865**
NNW **8045 EMERALD AV** **N/A**
1/8-1/4 **CHICAGO, IL**
0.203 mi.
1070 ft.

Relative: **Lower**

Actual: **598 ft.**

EDR Historical Auto Stations:

Name:	SOUTH SIDE AUTO SHOP
Year:	1923
Type:	AUTOMOBILE REPAIRING

71
East
1/8-1/4
0.203 mi.
1074 ft.

433 W 83RD ST
CHICAGO, IL

CHICAGO ENV **S116615361**
N/A

Relative:
Lower

Actual:
598 ft.

CHICAGO ENV:

Map Location:	433 W 83RD STCHICAGO, IL(41.74351892800047, -87.63435977199964)
Complaints:	Not reported
Neshaps & Demolition Notices:	Not reported
Enforcement:	Not reported
Inspections:	Not reported
Permits:	Not reported
Tanks:	Y
Holds & Lust Nfr:	Not reported
Latitude:	41.74351892800047
Longitude:	-87.63435977199964

T72
SW
1/8-1/4
0.205 mi.
1081 ft.

M D AUTO REPAIR SHOP
8426 S HALSTED
CHICAGO, IL
Site 1 of 2 in cluster T

EDR US Hist Auto Stat **1009103760**
N/A

Relative:
Higher

Actual:
608 ft.

EDR Historical Auto Stations:

Name:	M D AUTO REPAIR SHOP
Year:	1928
Type:	AUTOMOBILE REPAIRING

U73
NE
1/8-1/4
0.222 mi.
1171 ft.

443 W 81ST ST
CHICAGO, IL
Site 1 of 4 in cluster U

CHICAGO ENV **S116615609**
N/A

Relative:
Lower

Actual:
596 ft.

CHICAGO ENV:

Map Location:	443 W 81ST STCHICAGO, IL(41.74707284600049, -87.63589024999965)
Complaints:	Not reported
Neshaps & Demolition Notices:	Y
Enforcement:	Not reported
Inspections:	Not reported
Permits:	Not reported
Tanks:	Not reported
Holds & Lust Nfr:	Not reported
Latitude:	41.74707284600049
Longitude:	-87.63589024999965

74 **OLSEN AUTO REPAIR SHOP** **EDR US Hist Auto Stat** **1009103735**
SSW **8423 GILBERT CT** **N/A**
1/8-1/4 **CHICAGO, IL**
0.224 mi.
1185 ft.

Relative: **Higher**

Actual: **608 ft.**

EDR Historical Auto Stations:

Name:	OLSEN AUTO REPAIR SHOP
Year:	1928
Type:	AUTOMOBILE REPAIRING

V75 **WITHERSPOON HENRY** **UST** **U003152237**
NW **8054-58 S HALSTED** **N/A**
1/8-1/4 **CHICAGO, IL 60620**
0.229 mi.
1208 ft. **Site 1 of 4 in cluster V**

Relative: **Lower**

Actual: **595 ft.**

UST:

Facility ID:	2031734
Facility Status:	CLOSED
Facility Type:	**GOLF COURSE**
Owner Id:	U0021176
Owner Name:	Witherspoon Henry
Owner Address:	4364 S Oakenwald Ave
Owner City,St,Zip:	Chicago, IL 60653
Tank Number:	1
Tank Status:	**Removed**
Tank Capacity:	0
Tank Substance:	Used Oil
Last Used Date:	1/1/1902
OSFM First Notify Date:	2/2/1993
Red Tag Issue Date:	Not reported
Install Date:	Not reported
Green Tag Decal:	**Not reported**
Green Tag Issue Date:	**Not reported**
Green Tag Expire Date:	**Not reported**
Fee Due:	Not reported
MOTOR FUEL PERMIT INSPECTION DATE:	Not reported
MOTOR FUEL PERMIT EXPIRATION DATE:	Not reported
MOTOR FUEL TYPE:	Not reported
Pending Nov:	N
IEMA:	Not reported
Equipment Type:	Not reported
Equipment:	Not reported
Last Passing Date:	Not reported
Test Expire Date:	Not reported

U76 **81ST/VINCENNES AVE** **IL NIPC** **S100790178**
NE **N/A**
1/8-1/4 **CHICAGO, IL**
0.231 mi.
1218 ft. **Site 2 of 4 in cluster U**

Relative: **Lower**

Actual: **596 ft.**

V77 **SCHOLL CHAS SON** **EDR US Hist Auto Stat** **1009102855**
NW **8043 S HALSTED** **N/A**
1/8-1/4 **CHICAGO, IL**
0.234 mi.
1234 ft. **Site 2 of 4 in cluster V**

Relative: EDR Historical Auto Stations:
Lower Name: SCHOLL CHAS SON
Year: 1928
Actual: Type: AUTOMOBILE GARAGES
596 ft.

V78 **NAOMI & SYLVESTER SMITH SENIOR CENTER** **LUST** **S110685102**
NW **8045 SOUTH HALSTED** **N/A**
1/8-1/4 **CHICAGO, IL 60620**
0.237 mi.
1253 ft. **Site 3 of 4 in cluster V**

Relative: LUST:
Lower

Incident Num:	20101335
IL EPA Id:	0316715234
Actual: Product:	Other Petro
596 ft. IEMA Date:	12/09/2010
Project Manager:	Not reported
Project Manager Phone:	Not reported
Email:	Not reported
PRP Name:	Not reported
PRP Contact:	Not reported
PRP Address:	Not reported
PRP City,St,Zip:	Not reported
PRP Phone:	Not reported
Site Classification:	Not reported
Section 57.5(g) Letter:	734
Date Section 57.5(g) Letter:	Not reported
Non LUST Determination Letter:	Not reported
20 Report Received:	Not reported
45 Report Received:	Not reported
NFA/NFR Letter:	**Not reported**
NFR Date Recorded:	Not reported

W79 **ANATOL RUG AND CARPET CLEANERS INC** **EDR US Hist Cleaners** **1009186793**
NNE **8008 S WALLACE AVE** **N/A**
1/8-1/4 **CHICAGO, IL**
0.239 mi.
1263 ft. **Site 1 of 3 in cluster W**

Relative: EDR Historical Cleaners:
Higher Name: ANATOL RUG AND CARPET CLEANERS INC
Year: 1981
Actual: Type: CARPET AND RUG CLEANERS
601 ft.

U80
NE
1/8-1/4
0.240 mi.
1265 ft.

HABLAS FREDK
8100 VINCENNES AV
CHICAGO, IL

Site 3 of 4 in cluster U

EDR US Hist Auto Stat **1009096898**
N/A

Relative:
Lower

Actual:
595 ft.

EDR Historical Auto Stations:
Name: HABLAS FREDK
Year: 1928
Type: GASOLINE AND OIL SERVICE STATIONS

81
South
1/8-1/4
0.241 mi.
1272 ft.

GARDIN ANTONIO
8454 VINCENNES AV
CHICAGO, IL

EDR US Hist Auto Stat **1009097882**
N/A

Relative:
Lower

Actual:
600 ft.

EDR Historical Auto Stations:
Name: GARDIN ANTONIO
Year: 1928
Type: GASOLINE AND OIL SERVICE STATIONS

T82
SSW
1/8-1/4
0.242 mi.
1280 ft.

8431 S HALSTED ST
CHICAGO, IL 60620

Site 2 of 2 in cluster T

EDR US Hist Auto Stat **1015653934**
N/A

Relative:
Higher

Actual:
608 ft.

EDR Historical Auto Stations:
Name: MAGEES BODY SHOP
Year: 1999
Address: 8431 S HALSTED ST

Name: MAGEES BODY SHOP
Year: 2000
Address: 8431 S HALSTED ST

Name: MAGEES BODY SHOP
Year: 2001
Address: 8431 S HALSTED ST

Name: MAGEES BODY SHOP
Year: 2002
Address: 8431 S HALSTED ST

Name: MAGEES BODY SHOP
Year: 2003
Address: 8431 S HALSTED ST

Name: MAGEES BODY SHOP
Year: 2004
Address: 8431 S HALSTED ST

U83 **SIMEON VOCATIONAL HIGH SCHOOL** **SRP** **S104562071**
NE **8101 SOUTH VINCENNES AVENUE** **N/A**
1/8-1/4 **CHICAGO, IL 60620**
0.243 mi.
1285 ft. **Site 4 of 4 in cluster U**

Relative: SRP:
Lower

IL EPA Id:	0316715134
US EPA Id:	ILR000057547
Longitude:	-87.63482
Latitude:	41.74609
Contact Name:	Timothy Martin
Contact Address:	125 South Clark Street
Contact Address2:	17th Floor
Contact City,St,Zip:	Chicago, IL 60603-
Contact Phone:	(312) 553-3100
Date Enrolled:	07/11/2000
Point Of Contact:	Ala E. Sassila, P.E.
Consultant Company:	Camow, Conibear & Associates, Ltd.
Consultant Address:	600 West Van Buren Street
Consultant Address2:	Suite 500
Consultant City,St,Zip:	Chicago, IL 60607-
Consultant Phone:	(312) 762-2908
Proj Mgr Assigned:	Irwin
Sec. 4 Letter Date:	Not reported
NFR Recorded:	05/17/2002
Active:	False
Total Acres:	4.120
No Further Remediation Letter Dt:	04/23/2002
Remediation Applicant Co:	Chicago Public Schools
Remediation Applicant Title:	Mr.
Remediation Applicant Name:	Mr. Timothy Martin
Remediation Applicant Company:	Chicago Public Schools
Remediation Applicant Address:	125 South Clark Street
Remediation Applicant Address 2:	17th Floor
Remediation Applicant City,St,Zip:	Chicago, IL 60603-
Illinois EPA:	0316715134
Site Name:	Simeon Vocational High School
NFR Letter:	2002-04-23
NFR Letter Date Recorded:	2002-05-17
Site Type:	Residential
Comprehensive/Focused:	Comprehensive
Institutional Controls:	Not reported
Barrier:	Not reported
Worker Caution:	False
Acres:	4.120

Actual:
594 ft.

W84 **NATIONAL CASEIN CO** **AIRS** **1005450273**
North **601 W 80TH ST** **BOL** **N/A**
1/8-1/4 **CHICAGO, IL 60620** **CHICAGO ENV**
0.246 mi.
1298 ft. **Site 2 of 3 in cluster W**

Relative: IL AIRS:
Lower

Facility ID:	Not reported
ID Number:	031600BIN
Year:	2011
Contact Name:	Not reported
Contact Title:	Not reported

Actual:
599 ft.

NATIONAL CASEIN CO (Continued) **1005450273**

Contact Tele: Not reported
Contact Extention: Not reported
Contact EMail: Not reported
Contact Fax: Not reported
Cease Operation Date: Not reported
SIC Code: 2891
Address Type Code: Not reported

Detail:

Year: 2011
Id Num: 031600BIN
Pollutant Code: [108054]
Tons Per Year: 2.0500000000000002E-3

Year: 2011
Id Num: 031600BIN
Pollutant Code: CO2
Tons Per Year: 351.27600000000001

Year: 2011
Id Num: 031600BIN
Pollutant Code: CO
Tons Per Year: 0.24590000000000001

Year: 2011
Id Num: 031600BIN
Pollutant Code: SO2
Tons Per Year: 0.0018

Year: 2011
Id Num: 031600BIN
Pollutant Code: PHENOL
Tons Per Year: 8.7999999999999998E-5

Year: 2011
Id Num: 031600BIN
Pollutant Code: TOLUENE
Tons Per Year: 2.1100000000000001E-4

Year: 2011
Id Num: 031600BIN
Pollutant Code: NOX
Tons Per Year: 0.29270000000000002

Year: 2011
Id Num: 031600BIN
Pollutant Code: PM2_5
Tons Per Year: 8.5250000000000006E-2

Year: 2011
Id Num: 031600BIN
Pollutant Code: VOM
Tons Per Year: 0.107113

Year: 2011
Id Num: 031600BIN
Pollutant Code: PM10
Tons Per Year: 1.149

NATIONAL CASEIN CO (Continued) **1005450273**

Year: 2011
Id Num: 031600BIN
Pollutant Code: PART
Tons Per Year: 1.149

Year: 2011
Id Num: 031600BIN
Pollutant Code: METHANE
Tons Per Year: 6.7000000000000002E-3

Year: 2011
Id Num: 031600BIN
Pollutant Code: NH3
Tons Per Year: 8.8200000000000001E-2

Year: 2011
Id Num: 031600BIN
Pollutant Code: N2O
Tons Per Year: 6.4000000000000003E-3

Year: 2011
Id Num: 031600BIN
Pollutant Code: FORM
Tons Per Year: 0.000224

Facility ID: Not reported
ID Number: 031600BIN
Year: 2010
Contact Name: Not reported
Contact Title: Not reported
Contact Tele: Not reported
Contact Extention: Not reported
Contact EMail: Not reported
Contact Fax: Not reported
Cease Operation Date: Not reported
SIC Code: 2891
Address Type Code: Not reported

Detail:
Year: 2010
Id Num: 031600BIN
Pollutant Code: PM10
Tons Per Year: 2.4386999999999999

Year: 2010
Id Num: 031600BIN
Pollutant Code: N2O
Tons Per Year: 6.4000000000000003E-3

Year: 2010
Id Num: 031600BIN
Pollutant Code: NH3
Tons Per Year: 7.5300000000000006E-2

Year: 2010
Id Num: 031600BIN
Pollutant Code: CO

NATIONAL CASEIN CO (Continued) **1005450273**

Tons Per Year: 0.24299999999999999

Year: 2010
Id Num: 031600BIN
Pollutant Code: TOLUENE
Tons Per Year: 0.000115

Year: 2010
Id Num: 031600BIN
Pollutant Code: PM2_5
Tons Per Year: 0.14677999999999999

Year: 2010
Id Num: 031600BIN
Pollutant Code: FORM
Tons Per Year: 0.002189

Year: 2010
Id Num: 031600BIN
Pollutant Code: CO2
Tons Per Year: 347.11200000000002

Year: 2010
Id Num: 031600BIN
Pollutant Code: PART
Tons Per Year: 2.4386999999999999

Year: 2010
Id Num: 031600BIN
Pollutant Code: METHANE
Tons Per Year: 6.7000000000000002E-3

Year: 2010
Id Num: 031600BIN
Pollutant Code: SO2
Tons Per Year: 1.6999999999999999E-3

Year: 2010
Id Num: 031600BIN
Pollutant Code: VOM
Tons Per Year: 9.5694000000000001E-2

Year: 2010
Id Num: 031600BIN
Pollutant Code: [108054]
Tons Per Year: 2.0999999999999999E-3

Year: 2010
Id Num: 031600BIN
Pollutant Code: NOX
Tons Per Year: 0.2893

Year: 2010
Id Num: 031600BIN
Pollutant Code: PHENOL
Tons Per Year: 6.6000000000000005E-5

NATIONAL CASEIN CO (Continued) **1005450273**

Facility ID: Not reported
ID Number: 031600BIN
Year: 2009
Contact Name: Not reported
Contact Title: Not reported
Contact Tele: Not reported
Contact Extention: Not reported
Contact EMail: Not reported
Contact Fax: Not reported
Cease Operation Date: Not reported
SIC Code: 2891
Address Type Code: Not reported

Detail:

Year: 2009
Id Num: 031600BIN
Pollutant Code: PART
Tons Per Year: 2.4552999999999998

Year: 2009
Id Num: 031600BIN
Pollutant Code: NH3
Tons Per Year: 1.9599999999999999E-2

Year: 2009
Id Num: 031600BIN
Pollutant Code: SO2
Tons Per Year: 0.0018

Year: 2009
Id Num: 031600BIN
Pollutant Code: PM10
Tons Per Year: 2.4552999999999998

Year: 2009
Id Num: 031600BIN
Pollutant Code: CO2
Tons Per Year: 361.91399999999999

Year: 2009
Id Num: 031600BIN
Pollutant Code: N2O
Tons Per Year: 0.0066

Year: 2009
Id Num: 031600BIN
Pollutant Code: TOLUENE
Tons Per Year: 1.6000000000000001E-4

Year: 2009
Id Num: 031600BIN
Pollutant Code: PM2_5
Tons Per Year: 0.15548000000000001

Year: 2009
Id Num: 031600BIN
Pollutant Code: FORM
Tons Per Year: 4.4000000000000003E-3

NATIONAL CASEIN CO (Continued) **1005450273**

Year: 2009
Id Num: 031600BIN
Pollutant Code: VOM
Tons Per Year: 4.0467999999999997E-2

Year: 2009
Id Num: 031600BIN
Pollutant Code: METHANE
Tons Per Year: 6.8999999999999999E-3

Year: 2009
Id Num: 031600BIN
Pollutant Code: CO
Tons Per Year: 0.25330000000000003

Year: 2009
Id Num: 031600BIN
Pollutant Code: {108054}
Tons Per Year: 2.3999999999999998E-3

Year: 2009
Id Num: 031600BIN
Pollutant Code: NOX
Tons Per Year: 0.30159999999999998

Year: 2009
Id Num: 031600BIN
Pollutant Code: PHENOL
Tons Per Year: 2.0000000000000001E-4

Year: 2009
Id Num: 031600BIN
Pollutant Code: PM10
Tons Per Year: 2.4552999999999998

Year: 2009
Id Num: 031600BIN
Pollutant Code: SO2
Tons Per Year: 0.0018

Year: 2009
Id Num: 031600BIN
Pollutant Code: N2O
Tons Per Year: 0.0066

Year: 2009
Id Num: 031600BIN
Pollutant Code: FORM
Tons Per Year: 4.4000000000000003E-3

Year: 2009
Id Num: 031600BIN
Pollutant Code: VOM
Tons Per Year: 4.0467999999999997E-2

Year: 2009
Id Num: 031600BIN

NATIONAL CASEIN CO (Continued) **1005450273**

Pollutant Code: CO
Tons Per Year: 0.25330000000000003

Year: 2009
Id Num: 031600BIN
Pollutant Code: CO2
Tons Per Year: 361.91399999999999

Year: 2009
Id Num: 031600BIN
Pollutant Code: PHENOL
Tons Per Year: 2.0000000000000001E-4

Year: 2009
Id Num: 031600BIN
Pollutant Code: TOLUENE
Tons Per Year: 1.6000000000000001E-4

Year: 2009
Id Num: 031600BIN
Pollutant Code: PART
Tons Per Year: 2.4552999999999998

Year: 2009
Id Num: 031600BIN
Pollutant Code: PM2_5
Tons Per Year: 0.15548000000000001

Year: 2009
Id Num: 031600BIN
Pollutant Code: [108054]
Tons Per Year: 2.3999999999999998E-3

Year: 2009
Id Num: 031600BIN
Pollutant Code: NH3
Tons Per Year: 1.9599999999999999E-2

Year: 2009
Id Num: 031600BIN
Pollutant Code: NOX
Tons Per Year: 0.30159999999999998

Year: 2009
Id Num: 031600BIN
Pollutant Code: METHANE
Tons Per Year: 6.8999999999999999E-3

Facility ID: Not reported
ID Number: 031600BIN
Year: 2008
Contact Name: Not reported
Contact Title: Not reported
Contact Tele: Not reported
Contact Extention: Not reported
Contact EMail: Not reported

NATIONAL CASEIN CO (Continued) **1005450273**

Contact Fax: Not reported
Cease Operation Date: Not reported
SIC Code: 2891
Address Type Code: Not reported

Detail:

Year: 2008
Id Num: 031600BIN
Pollutant Code: N2O
Tons Per Year: 7.0000000000000001E-3

Year: 2008
Id Num: 031600BIN
Pollutant Code: CO
Tons Per Year: 0.26200000000000001

Year: 2008
Id Num: 031600BIN
Pollutant Code: TOLUENE
Tons Per Year: 4.0000000000000002E-4

Year: 2008
Id Num: 031600BIN
Pollutant Code: VOM
Tons Per Year: 0.0458

Year: 2008
Id Num: 031600BIN
Pollutant Code: PART
Tons Per Year: 3.0680000000000001

Year: 2008
Id Num: 031600BIN
Pollutant Code: PM10
Tons Per Year: 3.0680000000000001

Year: 2008
Id Num: 031600BIN
Pollutant Code: FORM
Tons Per Year: 4.4000000000000003E-3

Year: 2008
Id Num: 031600BIN
Pollutant Code: CO2
Tons Per Year: 374.38200000000001

Year: 2008
Id Num: 031600BIN
Pollutant Code: PM2_5
Tons Per Year: 0.19425000000000001

Year: 2008
Id Num: 031600BIN
Pollutant Code: NOX
Tons Per Year: 0.312

Year: 2008
Id Num: 031600BIN

NATIONAL CASEIN CO (Continued) **1005450273**

Pollutant Code: METHANE
Tons Per Year: 7.0000000000000001E-3

Year: 2008
Id Num: 031600BIN
Pollutant Code: SO2
Tons Per Year: 0.002

Year: 2008
Id Num: 031600BIN
Pollutant Code: NH3
Tons Per Year: 1.9599999999999999E-2

Year: 2008
Id Num: 031600BIN
Pollutant Code: [108054]
Tons Per Year: 3.5000000000000001E-3

Year: 2008
Id Num: 031600BIN
Pollutant Code: PHENOL
Tons Per Year: 2.0000000000000001E-4

Year: 2008
Id Num: 031600BIN
Pollutant Code: PART
Tons Per Year: 3.0680000000000001

Year: 2008
Id Num: 031600BIN
Pollutant Code: NOX
Tons Per Year: 0.312

Year: 2008
Id Num: 031600BIN
Pollutant Code: PM2_5
Tons Per Year: 0.19425000000000001

Year: 2008
Id Num: 031600BIN
Pollutant Code: METHANE
Tons Per Year: 7.0000000000000001E-3

Year: 2008
Id Num: 031600BIN
Pollutant Code: NH3
Tons Per Year: 1.9599999999999999E-2

Year: 2008
Id Num: 031600BIN
Pollutant Code: CO2
Tons Per Year: 374.38200000000001

Year: 2008
Id Num: 031600BIN
Pollutant Code: [108054]
Tons Per Year: 3.5000000000000001E-3

NATIONAL CASEIN CO (Continued) **1005450273**

Year: 2008
Id Num: 031600BIN
Pollutant Code: TOLUENE
Tons Per Year: 4.0000000000000002E-4

Year: 2008
Id Num: 031600BIN
Pollutant Code: SO2
Tons Per Year: 0.002

Year: 2008
Id Num: 031600BIN
Pollutant Code: VOM
Tons Per Year: 0.0458

Year: 2008
Id Num: 031600BIN
Pollutant Code: N2O
Tons Per Year: 7.0000000000000001E-3

Year: 2008
Id Num: 031600BIN
Pollutant Code: CO
Tons Per Year: 0.26200000000000001

Year: 2008
Id Num: 031600BIN
Pollutant Code: PHENOL
Tons Per Year: 2.0000000000000001E-4

Year: 2008
Id Num: 031600BIN
Pollutant Code: FORM
Tons Per Year: 4.4000000000000003E-3

Year: 2008
Id Num: 031600BIN
Pollutant Code: PM10
Tons Per Year: 3.0680000000000001

Facility ID: 2664
ID Number: 031600BIN
Year: 2007
Contact Name: Robert Havens
Contact Title: Not reported
Contact Tele: 773-846-7300
Contact Extention: Not reported
Contact EMail: Not reported
Contact Fax: Not reported
Cease Operation Date: Not reported
SIC Code: 2891
Address Type Code: Not reported

Facility ID: 2664
ID Number: 031600BIN
Year: 2006

NATIONAL CASEIN CO (Continued) **1005450273**

Contact Name:	Robert Havens
Contact Title:	Not reported
Contact Tele:	773-846-7300
Contact Extention:	Not reported
Contact EMail:	bobhavens@nationalcasein.com
Contact Fax:	773-487-5709
Cease Operation Date:	Not reported
SIC Code:	2891
Address Type Code:	LOC

BOL:

Site Id:	170000042567
Inv Num:	0316005173
Interest Name:	National Casein Co Inc
Interest Type:	BOL
Media Code:	LAND

CHICAGO ENV:

Map Location:	601 W 80TH STCHICAGO, IL(41.748842752000485, -87.63982990199969)
Complaints:	Y
Neshaps & Demolition Notices:	Not reported
Enforcement:	Not reported
Inspections:	Y
Permits:	Y
Tanks:	Not reported
Holds & Lust Nfr:	Not reported
Latitude:	41.748842752000485
Longitude:	-87.63982990199969

Map Location:	601 W 80TH STCHICAGO, IL(41.748842752000485, -87.63982990199969)
Complaints:	Y
Neshaps & Demolition Notices:	Not reported
Enforcement:	Not reported
Inspections:	Y
Permits:	Y
Tanks:	Not reported
Holds & Lust Nfr:	Not reported
Latitude:	41.748842752000485
Longitude:	-87.63982990199969

W85 **NATIONAL CASEIN CO INC** **RCRA NonGen / NLR** **1000260204**
North **601 W 80TH ST** **US AIRS** **ILD005169602**
1/8-1/4 **CHICAGO, IL 60620**
0.246 mi.
1298 ft. **Site 3 of 3 in cluster W**

Relative:
Lower

Actual:
599 ft.

RCRA NonGen / NLR:

Date form received by agency:	11/01/2007
Facility name:	NATIONAL CASEIN CO INC
Facility address:	601 W 80TH ST
	CHICAGO, IL 60620
EPA ID:	ILD005169602
Contact:	ENV COORDINATOR
Contact address:	Not reported
	Not reported
Contact country:	Not reported
Contact telephone:	(773) 846-7300

NATIONAL CASEIN CO INC (Continued) **1000260204**

Contact email: Not reported
EPA Region: 05
Classification: Non-Generator
Description: Handler: Non-Generators do not presently generate hazardous waste

Owner/Operator Summary:
Owner/operator name: NATIONAL CASEIN SALES A PARTNERSHIP
Owner/operator address: ADDRESS NOT REPORTED
CITY NOT REPORTED, AK 99998
Owner/operator country: Not reported
Owner/operator telephone: (312) 555-1212
Legal status: Private
Owner/Operator Type: Owner
Owner/Op start date: Not reported
Owner/Op end date: Not reported

Owner/operator name: NAME NOT REPORTED
Owner/operator address: ADDRESS NOT REPORTED
CITY NOT REPORTED, AK 99998
Owner/operator country: Not reported
Owner/operator telephone: (312) 555-1212
Legal status: Private
Owner/Operator Type: Operator
Owner/Op start date: Not reported
Owner/Op end date: Not reported

Handler Activities Summary:
U.S. importer of hazardous waste: No
Mixed waste (haz. and radioactive): No
Recycler of hazardous waste: No
Transporter of hazardous waste: No
Treater, storer or disposer of HW: No
Underground injection activity: No
On-site burner exemption: No
Furnace exemption: No
Used oil fuel burner: No
Used oil processor: No
User oil refiner: No
Used oil fuel marketer to burner: No
Used oil Specification marketer: No
Used oil transfer facility: No
Used oil transporter: No

Historical Generators:
Date form received by agency: 08/18/1980
Site name: NATIONAL CASEIN CO INC
Classification: Large Quantity Generator

Hazardous Waste Summary:
Waste code: P090
Waste name: Not Defined

Violation Status: No violations found

AIRS (AFS):

NATIONAL CASEIN CO INC (Continued) **1000260204**

Airs Minor Details:

EPA plant ID:	110001320749
Plant name:	NATIONAL CASEIN CO
Plant address:	601 W 80TH ST CHICAGO, IL 60620
County:	COOK
Region code:	05
Dunn & Bradst #:	Not reported
Air quality cntrl region:	067
Sic code:	2891
Sic code desc:	ADHESIVES AND SEALANTS
North Am. Industrial classf:	325520
NAIC code description:	Adhesive Manufacturing
Default compliance status:	IN COMPLIANCE WITH PROCEDURAL REQUIREMENTS
Default classification:	POTENTIAL UNCONTROLLED EMISSIONS < 100 TONS/YEAR
Govt facility:	ALL OTHER FACILITIES NOT OWNED OR OPERATED BY A FEDERAL, STATE, OR LOCAL GOVERNMENT
Current HPV:	Not reported

Compliance and Enforcement Major Issues:

Air program:	Not reported
National action type:	Not reported
Date achieved:	Not reported
Penalty amount:	Not reported
Air program:	Not reported
National action type:	Not reported
Date achieved:	Not reported
Penalty amount:	Not reported
Air program:	Not reported
National action type:	Not reported
Date achieved:	Not reported
Penalty amount:	Not reported

Historical Compliance Minor Sources:

State compliance status:	IN COMPLIANCE WITH PROCEDURAL REQUIREMENTS
Hist compliance date:	1402
Air prog code hist file:	SIP SOURCE
State compliance status:	IN COMPLIANCE WITH PROCEDURAL REQUIREMENTS
Hist compliance date:	1401
Air prog code hist file:	SIP SOURCE
State compliance status:	IN COMPLIANCE WITH PROCEDURAL REQUIREMENTS
Hist compliance date:	1303
Air prog code hist file:	SIP SOURCE
State compliance status:	IN COMPLIANCE WITH PROCEDURAL REQUIREMENTS
Hist compliance date:	1301
Air prog code hist file:	SIP SOURCE
State compliance status:	IN COMPLIANCE WITH PROCEDURAL REQUIREMENTS
Hist compliance date:	1204
Air prog code hist file:	SIP SOURCE

NATIONAL CASEIN CO INC (Continued) **1000260204**

State compliance status: IN COMPLIANCE WITH PROCEDURAL REQUIREMENTS
Hist compliance date: 1202
Air prog code hist file: SIP SOURCE

State compliance status: IN COMPLIANCE WITH PROCEDURAL REQUIREMENTS
Hist compliance date: 1104
Air prog code hist file: SIP SOURCE

State compliance status: IN COMPLIANCE WITH PROCEDURAL REQUIREMENTS
Hist compliance date: 1403
Air prog code hist file: SIP SOURCE

State compliance status: IN COMPLIANCE WITH PROCEDURAL REQUIREMENTS
Hist compliance date: 1304
Air prog code hist file: SIP SOURCE

State compliance status: IN COMPLIANCE WITH PROCEDURAL REQUIREMENTS
Hist compliance date: 1302
Air prog code hist file: SIP SOURCE

State compliance status: IN COMPLIANCE WITH PROCEDURAL REQUIREMENTS
Hist compliance date: 1203
Air prog code hist file: SIP SOURCE

State compliance status: IN COMPLIANCE WITH PROCEDURAL REQUIREMENTS
Hist compliance date: 1201
Air prog code hist file: SIP SOURCE

Compliance & Violation Data by Minor Sources:
Air program code: SIP SOURCE
Plant air program pollutant: Not reported
Default pollutant classification: Not reported
Def. poll. compliance status: IN COMPLIANCE WITH PROCEDURAL REQUIREMENTS
Def. attainment/non attnmnt: Not reported
Repeat violator date: Not reported
Turnover compliance: Not reported

Air program code: SIP SOURCE
Plant air program pollutant: PARTICULATE MATTER
Default pollutant classification: POTENTIAL UNCONTROLLED EMISSIONS < 100 TONS/YEAR
Def. poll. compliance status: IN COMPLIANCE WITH PROCEDURAL REQUIREMENTS
Def. attainment/non attnmnt: ATTAINMENT AREA FOR GIVEN POLLUTANT
Repeat violator date: Not reported
Turnover compliance: Not reported

Air program code: SIP SOURCE
Plant air program pollutant: SULFUR DIOXIDE
Default pollutant classification: POTENTIAL UNCONTROLLED EMISSIONS < 100 TONS/YEAR
Def. poll. compliance status: IN COMPLIANCE WITH PROCEDURAL REQUIREMENTS
Def. attainment/non attnmnt: ATTAINMENT AREA FOR GIVEN POLLUTANT
Repeat violator date: Not reported
Turnover compliance: Not reported

Air program code: SIP SOURCE
Plant air program pollutant: VOLATILE ORGANIC COMPOUNDS
Default pollutant classification: POTENTIAL UNCONTROLLED EMISSIONS < 100 TONS/YEAR
Def. poll. compliance status: IN COMPLIANCE WITH PROCEDURAL REQUIREMENTS

NATIONAL CASEIN CO INC (Continued) **1000260204**

Def. attainment/non attnmnt: Not reported
Repeat violator date: Not reported
Turnover compliance: Not reported

Air program code: SIP SOURCE
Plant air program pollutant: CARBON MONOXIDE
Default pollutant classification: POTENTIAL UNCONTROLLED EMISSIONS < 100 TONS/YEAR
Def. poll. compliance status: IN COMPLIANCE WITH PROCEDURAL REQUIREMENTS
Def. attainment/non attnmnt: ATTAINMENT AREA FOR GIVEN POLLUTANT
Repeat violator date: Not reported
Turnover compliance: Not reported

Air program code: SIP SOURCE
Plant air program pollutant: Not reported
Default pollutant classification: POTENTIAL UNCONTROLLED EMISSIONS < 100 TONS/YEAR
Def. poll. compliance status: IN COMPLIANCE WITH PROCEDURAL REQUIREMENTS
Def. attainment/non attnmnt: ATTAINMENT AREA FOR GIVEN POLLUTANT
Repeat violator date: Not reported
Turnover compliance: Not reported

Air program code: SIP SOURCE
Plant air program pollutant: PARTICULATE MATTER
Default pollutant classification: POTENTIAL UNCONTROLLED EMISSIONS < 100 TONS/YEAR
Def. poll. compliance status: IN COMPLIANCE WITH PROCEDURAL REQUIREMENTS
Def. attainment/non attnmnt: ALL OTHER NON-ATTAINMENT FOR PRIMARY AND SECONDARY STANDARDS
Repeat violator date: Not reported
Turnover compliance: Not reported

X86 **CHICAGO ENV** **S116618537**
North **631 W 80TH ST** **N/A**
1/8-1/4 **CHICAGO, IL**
0.249 mi.
1316 ft. **Site 1 of 2 in cluster X**

Relative: CHICAGO ENV:
Higher Map Location: 631 W 80TH STCHICAGO, IL(41.74884551100047, -87.64020848199965)
Complaints: Y
Actual: Neshaps & Demolition Notices: Not reported
603 ft. Enforcement: Not reported
Inspections: Not reported
Permits: Not reported
Tanks: Not reported
Holds & Lust Nfr: Not reported
Latitude: 41.74884551100047
Longitude: -87.64020848199965

X87 **CHICAGO ENV** **S116618835**
North **648 W 80TH ST** **N/A**
1/4-1/2 **CHICAGO, IL**
0.251 mi.
1323 ft. **Site 2 of 2 in cluster X**

Relative: CHICAGO ENV:
Lower Map Location: 648 W 80TH STCHICAGO, IL(41.748895037000466, -87.64063970399968)
Complaints: Not reported
Actual: Neshaps & Demolition Notices: Y
599 ft.

(Continued) S116618835

Enforcement: Not reported
Inspections: Y
Permits: Not reported
Tanks: Not reported
Holds & Lust Nfr: Not reported
Latitude: 41.748895037000466
Longitude: -87.64063970399968

Y88 CHICAGO ENV S116617254
NNE **539 W 80TH ST** N/A
1/4-1/2 **CHICAGO, IL**
0.255 mi.
1344 ft. **Site 1 of 3 in cluster Y**

Relative: **Higher**
Actual: **601 ft.**

CHICAGO ENV:
Map Location: 539 W 80TH STCHICAGO, IL(41.7488634930005, -87.63822938199968)
Complaints: Not reported
Neshaps & Demolition Notices: Y
Enforcement: Not reported
Inspections: Not reported
Permits: Not reported
Tanks: Not reported
Holds & Lust Nfr: Not reported
Latitude: 41.7488634930005
Longitude: -87.63822938199968

Y89 CHICAGO ENV S116617234
NNE **537 W 80TH ST** N/A
1/4-1/2 **CHICAGO, IL**
0.255 mi.
1346 ft. **Site 2 of 3 in cluster Y**

Relative: **Higher**
Actual: **601 ft.**

CHICAGO ENV:
Map Location: 537 W 80TH STCHICAGO, IL(41.7488634930005, -87.63813950399964)
Complaints: Not reported
Neshaps & Demolition Notices: Y
Enforcement: Not reported
Inspections: Not reported
Permits: Not reported
Tanks: Not reported
Holds & Lust Nfr: Not reported
Latitude: 41.7488634930005
Longitude: -87.63813950399964

Z90 CHICAGO ENV S116619873
NNW **736 W 80TH ST** N/A
1/4-1/2 **CHICAGO, IL**
0.263 mi.
1390 ft. **Site 1 of 3 in cluster Z**

Relative: **Lower**
Actual: **598 ft.**

CHICAGO ENV:
Map Location: 736 W 80TH STCHICAGO, IL(41.7488745870005, -87.64294805899965)
Complaints: Y
Neshaps & Demolition Notices: Not reported
Enforcement: Not reported

(Continued) **S116619873**

Inspections:	Not reported
Permits:	Not reported
Tanks:	Not reported
Holds & Lust Nfr:	Not reported
Latitude:	41.7488745870005
Longitude:	-87.64294805899965

V91 **NEW PISGAH BAPTIST CHURCH** **SRP** **S109143370**
NW **8019-8047 SOUTH HALSTED STREET** **N/A**
1/4-1/2 **CHICAGO, IL 60620**
0.263 mi.
1391 ft. **Site 4 of 4 in cluster V**

Relative: SRP:
Lower

IL EPA Id:	0316715219
US EPA Id:	Not reported
Longitude:	-87.64363
Latitude:	41.74792
Contact Name:	Stanley Smith
Contact Address:	8130 South Racine Avenue
Contact Address2:	Not reported
Contact City,St,Zip:	Chicago, IL 60620-
Contact Phone:	(773) 873-5392
Date Enrolled:	06/27/2008
Point Of Contact:	Matthew Hildreth
Consultant Company:	AECOM
Consultant Address:	27755 Diehl Road
Consultant Address2:	Suite 100
Consultant City,St,Zip:	Warrenville, IL 60555-
Consultant Phone:	Not reported
Proj Mgr Assigned:	Landers
Sec. 4 Letter Date:	Not reported
NFR Recorded:	10/18/2012
Active:	False
Total Acres:	0.979
No Further Remediation Letter Dt:	10/11/2012
Remediation Applicant Co:	New Pisgah Baptist Church
Remediation Applicant Title:	Mr.
Remediation Applicant Name:	Mr. Stanley Smith
Remediation Applicant Company:	New Pisgah Baptist Church
Remediation Applicant Address:	8130 South Racine Avenue
Remediation Applicant Address 2:	Not reported
Remediation Applicant City,St,Zip:	Chicago, IL 60620-
Illinois EPA:	0316715219
Site Name:	New Pisgah Baptist Church
NFR Letter:	2012-10-11
NFR Letter Date Recorded:	2012-10-18
Site Type:	Residential
Comprehensive/Focused:	Comprehensive
Institutional Controls:	Not reported
Barrier:	Not reported
Worker Caution:	False
Acres:	0.979

IL EPA Id:	0316715219
US EPA Id:	Not reported
Longitude:	-87.64363

NEW PISGAH BAPTIST CHURCH (Continued) **S109143370**

Latitude:	41.74792
Contact Name:	Stanley Smith
Contact Address:	8130 South Racine Avenue
Contact Address2:	Not reported
Contact City,St,Zip:	Chicago, IL 60620-
Contact Phone:	(773) 873-5392
Date Enrolled:	06/27/2008
Point Of Contact:	Matthew Hildreth
Consultant Company:	AECOM
Consultant Address:	27755 Diehl Road
Consultant Address2:	Suite 100
Consultant City,St,Zip:	Warrenville, IL 60555-
Consultant Phone:	Not reported
Proj Mgr Assigned:	Landers
Sec. 4 Letter Date:	Not reported
NFR Recorded:	Not reported
Active:	False
Total Acres:	0.979
No Further Remediation Letter Dt:	10/02/2012
Remediation Applicant Co:	New Pisgah Baptist Church
Remediation Applicant Title:	Mr.
Remediation Applicant Name:	Mr. Stanley Smith
Remediation Applicant Company:	New Pisgah Baptist Church
Remediation Applicant Address:	8130 South Racine Avenue
Remediation Applicant Address 2:	Not reported
Remediation Applicant City,St,Zip:	Chicago, IL 60620-
Illinois EPA:	0316715219
Site Name:	New Pisgah Baptist Church
NFR Letter:	2012-10-11
NFR Letter Date Recorded:	2012-10-18
Site Type:	Residential
Comprehensive/Focused:	Comprehensive
Institutional Controls:	Not reported
Barrier:	Not reported
Worker Caution:	False
Acres:	0.979

Z92 **CHICAGO ENV** **S116619886**
NNW **738 W 80TH ST** **N/A**
1/4-1/2 **CHICAGO, IL**
0.264 mi.
1393 ft. **Site 2 of 3 in cluster Z**

Relative:
Lower

Actual:
598 ft.

CHICAGO ENV:

Map Location:	738 W 80TH STCHICAGO, IL(41.748874249000494, -87.64297174299969)
Complaints:	Y
Neshaps & Demolition Notices:	Not reported
Enforcement:	Not reported
Inspections:	Y
Permits:	Not reported
Tanks:	Not reported
Holds & Lust Nfr:	Not reported
Latitude:	41.748874249000494
Longitude:	-87.64297174299969

93
SSE
1/4-1/2
0.271 mi.
1430 ft.

540 W 85TH ST
CHICAGO, IL

CHICAGO ENV **S116617269**
N/A

Relative:
Lower

Actual:
600 ft.

CHICAGO ENV:

Map Location:	540 W 85TH STCHICAGO, IL(41.73964979600049, -87.63815710099965)
Complaints:	Not reported
Neshaps & Demolition Notices:	Not reported
Enforcement:	Not reported
Inspections:	Not reported
Permits:	Y
Tanks:	Not reported
Holds & Lust Nfr:	Not reported
Latitude:	41.73964979600049
Longitude:	-87.63815710099965

Y94
NNE
1/4-1/2
0.271 mi.
1430 ft.

511 W 80TH ST
CHICAGO, IL

Site 3 of 3 in cluster Y

CHICAGO ENV **S116616703**
N/A

Relative:
Lower

Actual:
598 ft.

CHICAGO ENV:

Map Location:	511 W 80TH STCHICAGO, IL(41.74889345200046, -87.63719002399966)
Complaints:	Not reported
Neshaps & Demolition Notices:	Y
Enforcement:	Not reported
Inspections:	Not reported
Permits:	Not reported
Tanks:	Not reported
Holds & Lust Nfr:	Not reported
Latitude:	41.74889345200046
Longitude:	-87.63719002399966

Z95
NNW
1/4-1/2
0.272 mi.
1435 ft.

80TH/EMERALD AVE
CHICAGO, IL

Site 3 of 3 in cluster Z

IL NIPC **S100790181**
N/A

Relative:
Lower

Actual:
598 ft.

96
ESE
1/4-1/2
0.287 mi.
1513 ft.

CARDELL WESTINGHOUSE
8400 SOUTH STUART
CHICAGO, IL 60620

LUST **S103687677**
N/A

Relative:
Lower

Actual:
590 ft.

LUST:

Incident Num:	982540
IL EPA Id:	0316005774
Product:	Fuel Oil
IEMA Date:	10/12/1998
Project Manager:	Eppley

CARDELL WESTINGHOUSE (Continued) **S103687677**

Project Manager Phone:	(217) 782-6762
Email:	Not reported
PRP Name:	Cardwell Westinghouse
PRP Contact:	Pete Loonan
PRP Address:	8400 South Stuart
PRP City,St,Zip:	Chicago, IL 60620
PRP Phone:	3124837575
Site Classification:	Not reported
Section 57.5(g) Letter:	732
Date Section 57.5(g) Letter:	02/02/1999
Non LUST Determination Letter:	Not reported
20 Report Received:	Not reported
45 Report Received:	Not reported
NFA/NFR Letter:	**Not reported**
NFR Date Recorded:	Not reported

AA97 **CITY OF CHICAGO** **FINDS** **1004473945**
SW **819 W 85TH ST** **AIRS** **N/A**
1/4-1/2 **CHICAGO, IL 60620** **BOL**
0.297 mi. **CHICAGO ENV**
1568 ft. **Site 1 of 2 in cluster AA**

Relative:
Lower

Actual:
600 ft.

FINDS:

Registry ID: 110001356318

Environmental Interest/Information System

AFS (Aerometric Information Retrieval System (AIRS) Facility Subsystem) replaces the former Compliance Data System (CDS), the National Emission Data System (NEDS), and the Storage and Retrieval of Aerometric Data (SAROAD). AIRS is the national repository for information concerning airborne pollution in the United States. AFS is used to track emissions and compliance data from industrial plants. AFS data are utilized by states to prepare State Implementation Plans to comply with regulatory programs and by EPA as an input for the estimation of total national emissions. AFS is undergoing a major redesign to support facility operating permits required under Title V of the Clean Air Act.

ACES (Illinois - Agency Compliance And Enforcement System) is the Illinois EPA Project to facilitate the permitting operations

CRITERIA AND HAZARDOUS AIR POLLUTANT INVENTORY

IL AIRS:

Facility ID:	13081
ID Number:	031600FSH
Year:	Not reported
Contact Name:	Jill Connolly
Contact Title:	Not reported
Contact Tele:	312-742-0151
Contact Extention:	Not reported
Contact EMail:	Not reported
Contact Fax:	312-744-6451
Cease Operation Date:	8/14/2005
SIC Code:	9111

CITY OF CHICAGO (Continued) **1004473945**

Address Type Code: LOC

BOL:
Site Id: 170000058176
Inv Num: 0316715065
Interest Name: Chicago, City of
Interest Type: BOL
Media Code: LAND

CHICAGO ENV:
Map Location: 819 W 85TH STCHICAGO, IL(41.7396593900005, -87.64435684799969)
Complaints: Y
Neshaps & Demolition Notices: Not reported
Enforcement: Not reported
Inspections: Y
Permits: Y
Tanks: Y
Holds & Lust Nfr: Not reported
Latitude: 41.7396593900005
Longitude: -87.64435684799969

AA98 **CHICAGO, CITY OF** **LUST** **S109953575**
SW **8501 SOUTH GREEN STREET** **N/A**
1/4-1/2 **CHICAGO, IL 60620**
0.309 mi.
1629 ft. **Site 2 of 2 in cluster AA**

Relative:
Higher

Actual:
601 ft.

LUST:
Incident Num: 932366
IL EPA Id: 0316715065
Product: Gasoline
IEMA Date: 09/02/1993
Project Manager: Dilbaitis
Project Manager Phone: (217) 785-8378
Email: Bradley.Dilbaitis@illinois.gov
PRP Name: City of Chicago
PRP Contact: Richard Bolger
PRP Address: 1685 North Throop St.
PRP City,St,Zip: Chicago, IL 60622
PRP Phone: Not reported
Site Classification: Not reported
Section 57.5(g) Letter: 734
Date Section 57.5(g) Letter: Not reported
Non LUST Determination Letter: Not reported
20 Report Received: 10/06/1993
45 Report Received: 12/17/1993
NFA/NFR Letter: Not reported
NFR Date Recorded: Not reported

AB99 **CHICAGO ENV** **S116613127**
East **342 W 83RD ST** **N/A**
1/4-1/2 **CHICAGO, IL**
0.312 mi.
1650 ft. **Site 1 of 7 in cluster AB**

Relative: CHICAGO ENV:
Lower
Map Location: 342 W 83RD STCHICAGO, IL(41.743537759000446, -87.63370708899964)
Complaints: Not reported
Actual: Neshaps & Demolition Notices: Not reported
590 ft. Enforcement: Not reported
Inspections: Not reported
Permits: Not reported
Tanks: Y
Holds & Lust Nfr: Not reported
Latitude: 41.743537759000446
Longitude: -87.63370708899964

AB100 **CHICAGO ENV** **S116613007**
East **340 W 83RD ST** **N/A**
1/4-1/2 **CHICAGO, IL**
0.315 mi.
1663 ft. **Site 2 of 7 in cluster AB**

Relative: CHICAGO ENV:
Lower
Map Location: 340 W 83RD STCHICAGO, IL(41.74353764600045, -87.63361103699964)
Complaints: Not reported
Actual: Neshaps & Demolition Notices: Not reported
590 ft. Enforcement: Not reported
Inspections: Not reported
Permits: Not reported
Tanks: Y
Holds & Lust Nfr: Not reported
Latitude: 41.74353764600045
Longitude: -87.63361103699964

AC101 **CHICAGO ENV** **S116615583**
NE **442 W 80TH ST** **N/A**
1/4-1/2 **CHICAGO, IL**
0.317 mi.
1673 ft. **Site 1 of 3 in cluster AC**

Relative: CHICAGO ENV:
Lower
Map Location: 442 W 80TH STCHICAGO, IL(41.74897356200046, -87.63568143099968)
Complaints: Not reported
Actual: Neshaps & Demolition Notices: Y
595 ft. Enforcement: Not reported
Inspections: Not reported
Permits: Not reported
Tanks: Not reported
Holds & Lust Nfr: Not reported
Latitude: 41.74897356200046
Longitude: -87.63568143099968

AC102 **CHICAGO ENV** **S116615257**
NE **430 W 80TH ST** **N/A**
1/4-1/2 **CHICAGO, IL**
0.325 mi.
1716 ft. **Site 2 of 3 in cluster AC**

Relative: CHICAGO ENV:
Lower
Map Location: 430 W 80TH STCHICAGO, IL(41.7489775680005, -87.63547081899969)
Complaints: Not reported
Actual: Neshaps & Demolition Notices: Y
595 ft. Enforcement: Not reported
Inspections: Y
Permits: Not reported
Tanks: Not reported
Holds & Lust Nfr: Not reported
Latitude: 41.7489775680005
Longitude: -87.63547081899969

AB103 **CHICAGO ENV** **S116612332**
East **320 W 83RD ST** **N/A**
1/4-1/2 **CHICAGO, IL**
0.338 mi.
1787 ft. **Site 3 of 7 in cluster AB**

Relative: CHICAGO ENV:
Lower
Map Location: 320 W 83RD STCHICAGO, IL(41.74354801700048, -87.63291160099965)
Complaints: Not reported
Actual: Neshaps & Demolition Notices: Not reported
592 ft. Enforcement: Not reported
Inspections: Not reported
Permits: Not reported
Tanks: Y
Holds & Lust Nfr: Not reported
Latitude: 41.74354801700048
Longitude: -87.63291160099965

AB104 **CHICAGO ENV** **S116612492**
East **323 W 83RD ST** **N/A**
1/4-1/2 **CHICAGO, IL**
0.345 mi.
1821 ft. **Site 4 of 7 in cluster AB**

Relative: CHICAGO ENV:
Lower
Map Location: 323 W 83RD STCHICAGO, IL(41.7435136950005, -87.63185006599969)
Complaints: Not reported
Actual: Neshaps & Demolition Notices: Not reported
592 ft. Enforcement: Not reported
Inspections: Not reported
Permits: Not reported
Tanks: Y
Holds & Lust Nfr: Not reported
Latitude: 41.7435136950005
Longitude: -87.63185006599969

AB105 **W2005 CMK REALTY L.L.C.** **LUST** **S106346397**
East **8301 SOUTH STEWART** **ENG CONTROLS** **N/A**
1/4-1/2 **CHICAGO, IL 60620** **INST CONTROL**
0.346 mi. **SRP**
1826 ft. **Site 5 of 7 in cluster AB**

Relative:
Lower

Actual:
591 ft.

LUST:

Incident Num:	20060081
IL EPA Id:	0316006052
Product:	Gasoline, Deisel
IEMA Date:	01/23/2006
Project Manager:	Not reported
Project Manager Phone:	Not reported
Email:	Not reported
PRP Name:	Not reported
PRP Contact:	Not reported
PRP Address:	Not reported
PRP City,St,Zip:	Not reported
PRP Phone:	Not reported
Site Classification:	Not reported
Section 57.5(g) Letter:	734
Date Section 57.5(g) Letter:	Not reported
Non LUST Determination Letter:	Not reported
20 Report Received:	06/28/2006
45 Report Received:	06/28/2006
NFA/NFR Letter:	**Not reported**
NFR Date Recorded:	Not reported

Incident Num:	20060483
IL EPA Id:	0316006052
Product:	Fuel Oil
IEMA Date:	04/21/2006
Project Manager:	Not reported
Project Manager Phone:	Not reported
Email:	Not reported
PRP Name:	Not reported
PRP Contact:	Not reported
PRP Address:	Not reported
PRP City,St,Zip:	Not reported
PRP Phone:	Not reported
Site Classification:	Not reported
Section 57.5(g) Letter:	734
Date Section 57.5(g) Letter:	Not reported
Non LUST Determination Letter:	Not reported
20 Report Received:	06/28/2006
45 Report Received:	06/28/2006
NFA/NFR Letter:	**09/11/2008**
NFR Date Recorded:	09/17/2009

ENGINEERING CONTROLS:

Illinois Epa Id:	0316006052
NFR Letter:	08/12/2009
Date NFR Recorded:	09/17/2009
Type Of Site:	Industrial/Commercial
Comprehensive / Focused:	Comprehensive
Remediation Applicant Title:	Mr.
Remediation Applicant Name:	Douglas Romer
RA Company:	W2005 CMK Realty, L.L.C.
RA Address:	6011 Connection Drive

W2005 CMK REALTY L.L.C. (Continued) **S106346397**

RA Secondary Address: Not reported
RA City,St,Zip: Irving, TX 75039-
Institutional Controls: Groundwater use restriction
Engineered Barriers: Clean soil barrier
Worker Caution: True
Acres: 2.5

Illinois Epa Id: 0316006052
NFR Letter: 06/14/2011
Date NFR Recorded: 06/24/2011
Type Of Site: Industrial/Commercial
Comprehensive / Focused: Comprehensive
Remediation Applicant Title: Mr.
Remediation Applicant Name: Thomas Brashler
RA Company: W2005 CMK Realty, L.L.C.
RA Address: 30 West Monroe Street
RA Secondary Address: Suite 1000
RA City,St,Zip: Chicago, IL 60603-
Institutional Controls: Groundwater use restriction
Engineered Barriers: Asphalt barrier/Clean soil barrier/Concrete barrier/Building foundation
Worker Caution: True
Acres: 1.189

Illinois Epa Id: 0316006052
NFR Letter: 12/24/2012
Date NFR Recorded: 02/04/2013
Type Of Site: Industrial/Commercial
Comprehensive / Focused: Comprehensive
Remediation Applicant Title: Mr.
Remediation Applicant Name: Thomas Brashler
RA Company: W2005 CMK Realty, L.L.C.
RA Address: 30 West Monroe Street
RA Secondary Address: Suite 1000
RA City,St,Zip: Chicago, IL 60603-
Institutional Controls: Groundwater use restriction
Engineered Barriers: Asphalt barrier/Clean soil barrier/Concrete barrier/Building foundation
Worker Caution: True
Acres: 13.69

Illinois Epa Id: 0316006052
NFR Letter: 06/14/2011
Date NFR Recorded: 06/24/2011
Type Of Site: Industrial/Commercial
Comprehensive / Focused: Comprehensive
Remediation Applicant Title: Mr.
Remediation Applicant Name: Thomas Brashler
RA Company: W2005 CMK Realty, L.L.C.
RA Address: 30 West Monroe Street
RA Secondary Address: Suite 1000
RA City,St,Zip: Chicago, IL 60603-
Institutional Controls: Groundwater use restriction
Engineered Barriers: Asphalt barrier/Clean soil barrier/Concrete barrier/Building foundation
Worker Caution: True
Acres: 1.8

Illinois Epa Id: 0316006052
NFR Letter: 06/14/2011

W2005 CMK REALTY L.L.C. (Continued) **S106346397**

Date NFR Recorded:	06/24/2011
Type Of Site:	Industrial/Commercial
Comprehensive / Focused:	Comprehensive
Remediation Applicant Title:	Mr.
Remediation Applicant Name:	Thomas Brashler
RA Company:	W2005 CMK Realty, L.L.C.
RA Address:	30 West Monroe Street
RA Secondary Address:	Suite 1000
RA City,St,Zip:	Chicago, IL 60603-
Institutional Controls:	Groundwater use restriction
Engineered Barriers:	Asphalt barrier/Clean soil barrier/Concrete barrier/Building foundation
Worker Caution:	True
Acres:	1.070

Illinois Epa Id:	0316006052
NFR Letter:	05/19/2009
Date NFR Recorded:	07/06/2009
Type Of Site:	Industrial/Commercial
Comprehensive / Focused:	Comprehensive
Remediation Applicant Title:	Mr.
Remediation Applicant Name:	Douglas Romer
RA Company:	W2005 CMK Realty, L.L.C.
RA Address:	6011 Connection Drive
RA Secondary Address:	Not reported
RA City,St,Zip:	Irving, TX 75039-
Institutional Controls:	Groundwater use restriction
Engineered Barriers:	Asphalt barrier/Clean soil barrier/Concrete barrier/Building foundation
Worker Caution:	True
Acres:	4.099

Illinois Epa Id:	0316006052
NFR Letter:	06/14/2011
Date NFR Recorded:	06/24/2011
Type Of Site:	Industrial/Commercial
Comprehensive / Focused:	Comprehensive
Remediation Applicant Title:	Mr.
Remediation Applicant Name:	Thomas Brashler
RA Company:	W2005 CMK Realty, L.L.C.
RA Address:	30 West Monroe Street
RA Secondary Address:	Suite 1000
RA City,St,Zip:	Chicago, IL 60603-
Institutional Controls:	Groundwater use restriction
Engineered Barriers:	Asphalt barrier/Clean soil barrier/Concrete barrier/Building foundation
Worker Caution:	True
Acres:	1.72

Illinois Epa Id:	0316006052
NFR Letter:	09/11/2008
Date NFR Recorded:	10/22/2008
Type Of Site:	Industrial/Commercial
Comprehensive / Focused:	Comprehensive
Remediation Applicant Title:	Mr.
Remediation Applicant Name:	Douglas Romer
RA Company:	W2005 CMK Realty, L.L.C.
RA Address:	6011 Connection Drive
RA Secondary Address:	Not reported
RA City,St,Zip:	Irving, TX 75039-

W2005 CMK REALTY L.L.C. (Continued) **S106346397**

Institutional Controls: Groundwater use restriction
Engineered Barriers: Asphalt barrier/Clean soil barrier/Concrete barrier
Worker Caution: True
Acres: 11.5

Illinois Epa Id: 0316006052
NFR Letter: 07/11/2014
Date NFR Recorded: 07/23/2014
Type Of Site: Industrial/Commercial
Comprehensive / Focused: Comprehensive
Remediation Applicant Title: Mr.
Remediation Applicant Name: Thomas Brashler
RA Company: W2005 CMK Realty. L.L.C.
RA Address: 6 East Monroe Street
RA Secondary Address: Suite 300
RA City,St,Zip: Chicago, IL 60603-
Institutional Controls: Groundwater use restriction/Building restriction
Engineered Barriers: Asphalt barrier/Clean soil barrier/concrete barrier/Building foundation
Worker Caution: True
Acres: 0.800

IL INSTUTIONAL CONTROL:
Illinois EPA Id: 0316006052
NFR Letter: 08/12/2009
Date NFR Recorded: 09/17/2009
Type Of Site: Industrial/Commercial
Comprehensive / Focused: Comprehensive
Remediation Applicant Title: Mr.
Remediation Applicant Name: Douglas Romer
RA Company: W2005 CMK Realty, L.L.C.
RA Address: 6011 Connection Drive
RA Secondary Address: Not reported
RA City,St,Zip: Irving, TX 75039-
Institutional Controls: Groundwater use restriction
Engineered Barriers: Clean soil barrier
Worker Caution: True
Acres: 2.5

Illinois EPA Id: 0316006052
NFR Letter: 06/14/2011
Date NFR Recorded: 06/24/2011
Type Of Site: Industrial/Commercial
Comprehensive / Focused: Comprehensive
Remediation Applicant Title: Mr.
Remediation Applicant Name: Thomas Brashler
RA Company: W2005 CMK Realty, L.L.C.
RA Address: 30 West Monroe Street
RA Secondary Address: Suite 1000
RA City,St,Zip: Chicago, IL 60603-
Institutional Controls: Groundwater use restriction
Engineered Barriers: Asphalt barrier/Clean soil barrier/Concrete barrier/Building foundation
Worker Caution: True
Acres: 1.189

Illinois EPA Id: 0316006052
NFR Letter: 12/24/2012
Date NFR Recorded: 02/04/2013

W2005 CMK REALTY L.L.C. (Continued) **S106346397**

Type Of Site:	Industrial/Commercial
Comprehensive / Focused:	Comprehensive
Remediation Applicant Title:	Mr.
Remediation Applicant Name:	Thomas Brashler
RA Company:	W2005 CMK Realty, L.L.C.
RA Address:	30 West Monroe Street
RA Secondary Address:	Suite 1000
RA City,St,Zip:	Chicago, IL 60603-
Institutional Controls:	Groundwater use restriction
Engineered Barriers:	Asphalt barrier/Clean soil barrier/Concrete barrier/Building foundation
Worker Caution:	True
Acres:	13.69

Illinois EPA Id:	0316006052
NFR Letter:	06/14/2011
Date NFR Recorded:	06/24/2011
Type Of Site:	Industrial/Commercial
Comprehensive / Focused:	Comprehensive
Remediation Applicant Title:	Mr.
Remediation Applicant Name:	Thomas Brashler
RA Company:	W2005 CMK Realty, L.L.C.
RA Address:	30 West Monroe Street
RA Secondary Address:	Suite 1000
RA City,St,Zip:	Chicago, IL 60603-
Institutional Controls:	Groundwater use restriction
Engineered Barriers:	Asphalt barrier/Clean soil barrier/Concrete barrier/Building foundation
Worker Caution:	True
Acres:	1.8

Illinois EPA Id:	0316006052
NFR Letter:	06/14/2011
Date NFR Recorded:	06/24/2011
Type Of Site:	Industrial/Commercial
Comprehensive / Focused:	Comprehensive
Remediation Applicant Title:	Mr.
Remediation Applicant Name:	Thomas Brashler
RA Company:	W2005 CMK Realty, L.L.C.
RA Address:	30 West Monroe Street
RA Secondary Address:	Suite 1000
RA City,St,Zip:	Chicago, IL 60603-
Institutional Controls:	Groundwater use restriction
Engineered Barriers:	Asphalt barrier/Clean soil barrier/Concrete barrier/Building foundation
Worker Caution:	True
Acres:	1.070

Illinois EPA Id:	0316006052
NFR Letter:	05/19/2009
Date NFR Recorded:	07/06/2009
Type Of Site:	Industrial/Commercial
Comprehensive / Focused:	Comprehensive
Remediation Applicant Title:	Mr.
Remediation Applicant Name:	Douglas Romer
RA Company:	W2005 CMK Realty, L.L.C.
RA Address:	6011 Connection Drive
RA Secondary Address:	Not reported
RA City,St,Zip:	Irving, TX 75039-
Institutional Controls:	Groundwater use restriction

W2005 CMK REALTY L.L.C. (Continued) **S106346397**

Engineered Barriers:	Asphalt barrier/Clean soil barrier/Concrete barrier/Building foundation
Worker Caution:	True
Acres:	4.099
Illinois EPA Id:	0316006052
NFR Letter:	06/14/2011
Date NFR Recorded:	06/24/2011
Type Of Site:	Industrial/Commercial
Comprehensive / Focused:	Comprehensive
Remediation Applicant Title:	Mr.
Remediation Applicant Name:	Thomas Brashler
RA Company:	W2005 CMK Realty, L.L.C.
RA Address:	30 West Monroe Street
RA Secondary Address:	Suite 1000
RA City,St,Zip:	Chicago, IL 60603-
Institutional Controls:	Groundwater use restriction
Engineered Barriers:	Asphalt barrier/Clean soil barrier/Concrete barrier/Building foundation
Worker Caution:	True
Acres:	1.72
Illinois EPA Id:	0316006052
NFR Letter:	09/11/2008
Date NFR Recorded:	10/22/2008
Type Of Site:	Industrial/Commercial
Comprehensive / Focused:	Comprehensive
Remediation Applicant Title:	Mr.
Remediation Applicant Name:	Douglas Romer
RA Company:	W2005 CMK Realty, L.L.C.
RA Address:	6011 Connection Drive
RA Secondary Address:	Not reported
RA City,St,Zip:	Irving, TX 75039-
Institutional Controls:	Groundwater use restriction
Engineered Barriers:	Asphalt barrier/Clean soil barrier/Concrete barrier
Worker Caution:	True
Acres:	11.5
Illinois EPA Id:	0316006052
NFR Letter:	07/11/2014
Date NFR Recorded:	07/23/2014
Type Of Site:	Industrial/Commercial
Comprehensive / Focused:	Comprehensive
Remediation Applicant Title:	Mr.
Remediation Applicant Name:	Thomas Brashler
RA Company:	W2005 CMK Realty. L.L.C.
RA Address:	6 East Monroe Street
RA Secondary Address:	Suite 300
RA City,St,Zip:	Chicago, IL 60603-
Institutional Controls:	Groundwater use restriction/Building restriction
Engineered Barriers:	Asphalt barrier/Clean soil barrier/concrete barrier/Building foundation
Worker Caution:	True
Acres:	0.800

SRP:

IL EPA Id:	0316006052
US EPA Id:	IL0000086496
Longitude:	-87.63168
Latitude:	41.74237

W2005 CMK REALTY L.L.C. (Continued) **S106346397**

Contact Name:	Thomas Brashler
Contact Address:	6 East Monroe Street
Contact Address2:	Suite 300
Contact City,St,Zip:	Chicago, IL 60603-
Contact Phone:	(312) 377-8356
Date Enrolled:	02/13/2004
Point Of Contact:	Mark Santangelo
Consultant Company:	Pioneer Engineering & Environmental Services, Inc.
Consultant Address:	700 North Sacramento Boulevard
Consultant Address2:	Suite 101
Consultant City,St,Zip:	Chicago, IL 60612-
Consultant Phone:	(312) 587-1021
Proj Mgr Assigned:	Baldwin
Sec. 4 Letter Date:	Not reported
NFR Recorded:	06/24/2011
Active:	False
Total Acres:	0.800
No Further Remediation Letter Dt:	06/14/2011
Remediation Applicant Co:	W2005 CMK Realty, L.L.C.
Remediation Applicant Title:	Mr.
Remediation Applicant Name:	Mr. Thomas Brashler
Remediation Applicant Company:	W2005 CMK Realty, L.L.C.
Remediation Applicant Address:	30 West Monroe Street
Remediation Applicant Address 2:	Suite 1000
Remediation Applicant City,St,Zip:	Chicago, IL 60603-
Illinois EPA:	0316006052
Site Name:	Ryerson Parcels G
NFR Letter:	2011-06-14
NFR Letter Date Recorded:	2011-06-24
Site Type:	Industrial/Commercial
Comprehensive/Focused:	Comprehensive
Institutional Controls:	Groundwater use restriction
Barrier:	Asphalt barrier/Clean soil barrier/Concrete barrier/Building foundation
Worker Caution:	True
Acres:	1.72

Remediation Applicant Name:	Mr. Thomas Brashler
Remediation Applicant Company:	W2005 CMK Realty, L.L.C.
Remediation Applicant Address:	30 West Monroe Street
Remediation Applicant Address 2:	Suite 1000
Remediation Applicant City,St,Zip:	Chicago, IL 60603-
Illinois EPA:	0316006052
Site Name:	Ryerson Parcel-D
NFR Letter:	2011-06-14
NFR Letter Date Recorded:	2011-06-24
Site Type:	Industrial/Commercial
Comprehensive/Focused:	Comprehensive
Institutional Controls:	Groundwater use restriction
Barrier:	Asphalt barrier/Clean soil barrier/Concrete barrier/Building foundation
Worker Caution:	True
Acres:	1.070

Remediation Applicant Name:	Mr. Thomas Brashler
Remediation Applicant Company:	W2005 CMK Realty, L.L.C.
Remediation Applicant Address:	30 West Monroe Street
Remediation Applicant Address 2:	Suite 1000
Remediation Applicant City,St,Zip:	Chicago, IL 60603-

W2005 CMK REALTY L.L.C. (Continued) **S106346397**

Illinois EPA:	0316006052
Site Name:	Ryerson Parcel C
NFR Letter:	2011-06-14
NFR Letter Date Recorded:	2011-06-24
Site Type:	Industrial/Commercial
Comprehensive/Focused:	Comprehensive
Institutional Controls:	Groundwater use restriction
Barrier:	Asphalt barrier/Clean soil barrier/Concrete barrier/Building foundation
Worker Caution:	True
Acres:	1.189

Remediation Applicant Name:	Mr. Thomas Brashler
Remediation Applicant Company:	W2005 CMK Realty, L.L.C.
Remediation Applicant Address:	30 West Monroe Street
Remediation Applicant Address 2:	Suite 1000
Remediation Applicant City,St,Zip:	Chicago, IL 60603-
Illinois EPA:	0316006052
Site Name:	Ryerson Parcel P
NFR Letter:	2011-06-14
NFR Letter Date Recorded:	2011-06-24
Site Type:	Industrial/Commercial
Comprehensive/Focused:	Comprehensive
Institutional Controls:	Groundwater use restriction
Barrier:	Asphalt barrier/Clean soil barrier/Concrete barrier/Building foundation
Worker Caution:	True
Acres:	1.8

Remediation Applicant Name:	Mr. Thomas Brashler
Remediation Applicant Company:	W2005 CMK Realty, L.L.C.
Remediation Applicant Address:	30 West Monroe Street
Remediation Applicant Address 2:	Suite 1000
Remediation Applicant City,St,Zip:	Chicago, IL 60603-
Illinois EPA:	0316006052
Site Name:	Ryerson Parcel J
NFR Letter:	2012-12-24
NFR Letter Date Recorded:	2013-02-04
Site Type:	Industrial/Commercial
Comprehensive/Focused:	Comprehensive
Institutional Controls:	Groundwater use restriction
Barrier:	Asphalt barrier/Clean soil barrier/Concrete barrier/Building foundation
Worker Caution:	True
Acres:	13.69

Remediation Applicant Name:	Mr. Thomas Brashler
Remediation Applicant Company:	W2005 CMK Realty. L.L.C.
Remediation Applicant Address:	6 East Monroe Street
Remediation Applicant Address 2:	Suite 300
Remediation Applicant City,St,Zip:	Chicago, IL 60603-
Illinois EPA:	0316006052
Site Name:	Ryerson-Parcel E2
NFR Letter:	2014-07-11
NFR Letter Date Recorded:	2014-07-23
Site Type:	Industrial/Commercial
Comprehensive/Focused:	Comprehensive
Institutional Controls:	Groundwater use restriction/Building restriction
Barrier:	Asphalt barrier/Clean soil barrier/concrete barrier/Building foundation
Worker Caution:	True

W2005 CMK REALTY L.L.C. (Continued) **S106346397**

Acres:	0.800
Remediation Applicant Name:	Mr. Douglas Romer
Remediation Applicant Company:	W2005 CMK Realty, L.L.C.
Remediation Applicant Address:	6011 Connection Drive
Remediation Applicant Address 2:	Not reported
Remediation Applicant City,St,Zip:	Irving, TX 75039-
Illinois EPA:	0316006052
Site Name:	Ryerson-Lowes Parcel
NFR Letter:	2008-09-11
NFR Letter Date Recorded:	2008-10-22
Site Type:	Industrial/Commercial
Comprehensive/Focused:	Comprehensive
Institutional Controls:	Groundwater use restriction
Barrier:	Asphalt barrier/Clean soil barrier/Concrete barrier
Worker Caution:	True
Acres:	11.5
Remediation Applicant Name:	Mr. Douglas Romer
Remediation Applicant Company:	W2005 CMK Realty, L.L.C.
Remediation Applicant Address:	6011 Connection Drive
Remediation Applicant Address 2:	Not reported
Remediation Applicant City,St,Zip:	Irving, TX 75039-
Illinois EPA:	0316006052
Site Name:	Ryerson Parcels C, D, and G
NFR Letter:	2009-05-19
NFR Letter Date Recorded:	2009-07-06
Site Type:	Industrial/Commercial
Comprehensive/Focused:	Comprehensive
Institutional Controls:	Groundwater use restriction
Barrier:	Asphalt barrier/Clean soil barrier/Concrete barrier/Building foundation
Worker Caution:	True
Acres:	4.099
Remediation Applicant Name:	Mr. Douglas Romer
Remediation Applicant Company:	W2005 CMK Realty, L.L.C.
Remediation Applicant Address:	6011 Connection Drive
Remediation Applicant Address 2:	Not reported
Remediation Applicant City,St,Zip:	Irving, TX 75039-
Illinois EPA:	0316006052
Site Name:	Ryerson -Detention Ponds #1 and #2
NFR Letter:	2009-08-12
NFR Letter Date Recorded:	2009-09-17
Site Type:	Industrial/Commercial
Comprehensive/Focused:	Comprehensive
Institutional Controls:	Groundwater use restriction
Barrier:	Clean soil barrier
Worker Caution:	True
Acres:	2.5

IL EPA Id:	0316006052
US EPA Id:	IL0000086496
Longitude:	-87.63168
Latitude:	41.74237
Contact Name:	Thomas Brashler
Contact Address:	6 East Monroe Street

W2005 CMK REALTY L.L.C. (Continued) **S106346397**

Contact Address2:	Suite 300
Contact City,St,Zip:	Chicago, IL 60603-
Contact Phone:	(312) 377-8356
Date Enrolled:	02/13/2004
Point Of Contact:	Mark Santangelo
Consultant Company:	Pioneer Engineering & Environmental Services, Inc.
Consultant Address:	700 North Sacramento Boulevard
Consultant Address2:	Suite 101
Consultant City,St,Zip:	Chicago, IL 60612-
Consultant Phone:	(312) 587-1021
Proj Mgr Assigned:	Baldwin
Sec. 4 Letter Date:	Not reported
NFR Recorded:	06/24/2011
Active:	False
Total Acres:	0.800
No Further Remediation Letter Dt:	06/14/2011
Remediation Applicant Co:	W2005 CMK Realty, L.L.C.
Remediation Applicant Title:	Mr.
Remediation Applicant Name:	Mr. Thomas Brashler
Remediation Applicant Company:	W2005 CMK Realty, L.L.C.
Remediation Applicant Address:	30 West Monroe Street
Remediation Applicant Address 2:	Suite 1000
Remediation Applicant City,St,Zip:	Chicago, IL 60603-
Illinois EPA:	0316006052
Site Name:	Ryerson Parcels G
NFR Letter:	2011-06-14
NFR Letter Date Recorded:	2011-06-24
Site Type:	Industrial/Commercial
Comprehensive/Focused:	Comprehensive
Institutional Controls:	Groundwater use restriction
Barrier:	Asphalt barrier/Clean soil barrier/Concrete barrier/Building foundation
Worker Caution:	True
Acres:	1.72

Remediation Applicant Name:	Mr. Thomas Brashler
Remediation Applicant Company:	W2005 CMK Realty, L.L.C.
Remediation Applicant Address:	30 West Monroe Street
Remediation Applicant Address 2:	Suite 1000
Remediation Applicant City,St,Zip:	Chicago, IL 60603-
Illinois EPA:	0316006052
Site Name:	Ryerson Parcel-D
NFR Letter:	2011-06-14
NFR Letter Date Recorded:	2011-06-24
Site Type:	Industrial/Commercial
Comprehensive/Focused:	Comprehensive
Institutional Controls:	Groundwater use restriction
Barrier:	Asphalt barrier/Clean soil barrier/Concrete barrier/Building foundation
Worker Caution:	True
Acres:	1.070

Remediation Applicant Name:	Mr. Thomas Brashler
Remediation Applicant Company:	W2005 CMK Realty, L.L.C.
Remediation Applicant Address:	30 West Monroe Street
Remediation Applicant Address 2:	Suite 1000
Remediation Applicant City,St,Zip:	Chicago, IL 60603-
Illinois EPA:	0316006052
Site Name:	Ryerson Parcel C

W2005 CMK REALTY L.L.C. (Continued) **S106346397**

NFR Letter:	2011-06-14
NFR Letter Date Recorded:	2011-06-24
Site Type:	Industrial/Commercial
Comprehensive/Focused:	Comprehensive
Institutional Controls:	Groundwater use restriction
Barrier:	Asphalt barrier/Clean soil barrier/Concrete barrier/Building foundation
Worker Caution:	True
Acres:	1.189

Remediation Applicant Name:	Mr. Thomas Brashler
Remediation Applicant Company:	W2005 CMK Realty, L.L.C.
Remediation Applicant Address:	30 West Monroe Street
Remediation Applicant Address 2:	Suite 1000
Remediation Applicant City,St,Zip:	Chicago, IL 60603-
Illinois EPA:	0316006052
Site Name:	Ryerson Parcel P
NFR Letter:	2011-06-14
NFR Letter Date Recorded:	2011-06-24
Site Type:	Industrial/Commercial
Comprehensive/Focused:	Comprehensive
Institutional Controls:	Groundwater use restriction
Barrier:	Asphalt barrier/Clean soil barrier/Concrete barrier/Building foundation
Worker Caution:	True
Acres:	1.8

Remediation Applicant Name:	Mr. Thomas Brashler
Remediation Applicant Company:	W2005 CMK Realty, L.L.C.
Remediation Applicant Address:	30 West Monroe Street
Remediation Applicant Address 2:	Suite 1000
Remediation Applicant City,St,Zip:	Chicago, IL 60603-
Illinois EPA:	0316006052
Site Name:	Ryerson Parcel J
NFR Letter:	2012-12-24
NFR Letter Date Recorded:	2013-02-04
Site Type:	Industrial/Commercial
Comprehensive/Focused:	Comprehensive
Institutional Controls:	Groundwater use restriction
Barrier:	Asphalt barrier/Clean soil barrier/Concrete barrier/Building foundation
Worker Caution:	True
Acres:	13.69

Remediation Applicant Name:	Mr. Thomas Brashler
Remediation Applicant Company:	W2005 CMK Realty. L.L.C.
Remediation Applicant Address:	6 East Monroe Street
Remediation Applicant Address 2:	Suite 300
Remediation Applicant City,St,Zip:	Chicago, IL 60603-
Illinois EPA:	0316006052
Site Name:	Ryerson-Parcel E2
NFR Letter:	2014-07-11
NFR Letter Date Recorded:	2014-07-23
Site Type:	Industrial/Commercial
Comprehensive/Focused:	Comprehensive
Institutional Controls:	Groundwater use restriction/Building restriction
Barrier:	Asphalt barrier/Clean soil barrier/concrete barrier/Building foundation
Worker Caution:	True
Acres:	0.800

W2005 CMK REALTY L.L.C. (Continued) **S106346397**

Remediation Applicant Name:	Mr. Douglas Romer
Remediation Applicant Company:	W2005 CMK Realty, L.L.C.
Remediation Applicant Address:	6011 Connection Drive
Remediation Applicant Address 2:	Not reported
Remediation Applicant City,St,Zip:	Irving, TX 75039-
Illinois EPA:	0316006052
Site Name:	Ryerson-Lowes Parcel
NFR Letter:	2008-09-11
NFR Letter Date Recorded:	2008-10-22
Site Type:	Industrial/Commercial
Comprehensive/Focused:	Comprehensive
Institutional Controls:	Groundwater use restriction
Barrier:	Asphalt barrier/Clean soil barrier/Concrete barrier
Worker Caution:	True
Acres:	11.5

Remediation Applicant Name:	Mr. Douglas Romer
Remediation Applicant Company:	W2005 CMK Realty, L.L.C.
Remediation Applicant Address:	6011 Connection Drive
Remediation Applicant Address 2:	Not reported
Remediation Applicant City,St,Zip:	Irving, TX 75039-
Illinois EPA:	0316006052
Site Name:	Ryerson Parcels C, D, and G
NFR Letter:	2009-05-19
NFR Letter Date Recorded:	2009-07-06
Site Type:	Industrial/Commercial
Comprehensive/Focused:	Comprehensive
Institutional Controls:	Groundwater use restriction
Barrier:	Asphalt barrier/Clean soil barrier/Concrete barrier/Building foundation
Worker Caution:	True
Acres:	4.099

Remediation Applicant Name:	Mr. Douglas Romer
Remediation Applicant Company:	W2005 CMK Realty, L.L.C.
Remediation Applicant Address:	6011 Connection Drive
Remediation Applicant Address 2:	Not reported
Remediation Applicant City,St,Zip:	Irving, TX 75039-
Illinois EPA:	0316006052
Site Name:	Ryerson -Detention Ponds #1 and #2
NFR Letter:	2009-08-12
NFR Letter Date Recorded:	2009-09-17
Site Type:	Industrial/Commercial
Comprehensive/Focused:	Comprehensive
Institutional Controls:	Groundwater use restriction
Barrier:	Clean soil barrier
Worker Caution:	True
Acres:	2.5

IL EPA Id:	0316006052
US EPA Id:	IL0000086496
Longitude:	-87.63168
Latitude:	41.74237
Contact Name:	Thomas Brashler
Contact Address:	6 East Monroe Street
Contact Address2:	Suite 300
Contact City,St,Zip:	Chicago, IL 60603-

W2005 CMK REALTY L.L.C. (Continued) **S106346397**

Contact Phone:	(312) 377-8356
Date Enrolled:	02/13/2004
Point Of Contact:	Mark Santangelo
Consultant Company:	Pioneer Engineering & Environmental Services, Inc.
Consultant Address:	700 North Sacramento Boulevard
Consultant Address2:	Suite 101
Consultant City,St,Zip:	Chicago, IL 60612-
Consultant Phone:	(312) 587-1021
Proj Mgr Assigned:	Baldwin
Sec. 4 Letter Date:	Not reported
NFR Recorded:	06/24/2011
Active:	False
Total Acres:	0.800
No Further Remediation Letter Dt:	06/14/2011
Remediation Applicant Co:	W2005 CMK Realty, L.L.C.
Remediation Applicant Title:	Mr.
Remediation Applicant Name:	Mr. Thomas Brashler
Remediation Applicant Company:	W2005 CMK Realty, L.L.C.
Remediation Applicant Address:	30 West Monroe Street
Remediation Applicant Address 2:	Suite 1000
Remediation Applicant City,St,Zip:	Chicago, IL 60603-
Illinois EPA:	0316006052
Site Name:	Ryerson Parcels G
NFR Letter:	2011-06-14
NFR Letter Date Recorded:	2011-06-24
Site Type:	Industrial/Commercial
Comprehensive/Focused:	Comprehensive
Institutional Controls:	Groundwater use restriction
Barrier:	Asphalt barrier/Clean soil barrier/Concrete barrier/Building foundation
Worker Caution:	True
Acres:	1.72

Remediation Applicant Name:	Mr. Thomas Brashler
Remediation Applicant Company:	W2005 CMK Realty, L.L.C.
Remediation Applicant Address:	30 West Monroe Street
Remediation Applicant Address 2:	Suite 1000
Remediation Applicant City,St,Zip:	Chicago, IL 60603-
Illinois EPA:	0316006052
Site Name:	Ryerson Parcel-D
NFR Letter:	2011-06-14
NFR Letter Date Recorded:	2011-06-24
Site Type:	Industrial/Commercial
Comprehensive/Focused:	Comprehensive
Institutional Controls:	Groundwater use restriction
Barrier:	Asphalt barrier/Clean soil barrier/Concrete barrier/Building foundation
Worker Caution:	True
Acres:	1.070

Remediation Applicant Name:	Mr. Thomas Brashler
Remediation Applicant Company:	W2005 CMK Realty, L.L.C.
Remediation Applicant Address:	30 West Monroe Street
Remediation Applicant Address 2:	Suite 1000
Remediation Applicant City,St,Zip:	Chicago, IL 60603-
Illinois EPA:	0316006052
Site Name:	Ryerson Parcel C
NFR Letter:	2011-06-14
NFR Letter Date Recorded:	2011-06-24

W2005 CMK REALTY L.L.C. (Continued) **S106346397**

Site Type:	Industrial/Commercial
Comprehensive/Focused:	Comprehensive
Institutional Controls:	Groundwater use restriction
Barrier:	Asphalt barrier/Clean soil barrier/Concrete barrier/Building foundation
Worker Caution:	True
Acres:	1.189
Remediation Applicant Name:	Mr. Thomas Brashler
Remediation Applicant Company:	W2005 CMK Realty, L.L.C.
Remediation Applicant Address:	30 West Monroe Street
Remediation Applicant Address 2:	Suite 1000
Remediation Applicant City,St,Zip:	Chicago, IL 60603-
Illinois EPA:	0316006052
Site Name:	Ryerson Parcel P
NFR Letter:	2011-06-14
NFR Letter Date Recorded:	2011-06-24
Site Type:	Industrial/Commercial
Comprehensive/Focused:	Comprehensive
Institutional Controls:	Groundwater use restriction
Barrier:	Asphalt barrier/Clean soil barrier/Concrete barrier/Building foundation
Worker Caution:	True
Acres:	1.8
Remediation Applicant Name:	Mr. Thomas Brashler
Remediation Applicant Company:	W2005 CMK Realty, L.L.C.
Remediation Applicant Address:	30 West Monroe Street
Remediation Applicant Address 2:	Suite 1000
Remediation Applicant City,St,Zip:	Chicago, IL 60603-
Illinois EPA:	0316006052
Site Name:	Ryerson Parcel J
NFR Letter:	2012-12-24
NFR Letter Date Recorded:	2013-02-04
Site Type:	Industrial/Commercial
Comprehensive/Focused:	Comprehensive
Institutional Controls:	Groundwater use restriction
Barrier:	Asphalt barrier/Clean soil barrier/Concrete barrier/Building foundation
Worker Caution:	True
Acres:	13.69
Remediation Applicant Name:	Mr. Thomas Brashler
Remediation Applicant Company:	W2005 CMK Realty. L.L.C.
Remediation Applicant Address:	6 East Monroe Street
Remediation Applicant Address 2:	Suite 300
Remediation Applicant City,St,Zip:	Chicago, IL 60603-
Illinois EPA:	0316006052
Site Name:	Ryerson-Parcel E2
NFR Letter:	2014-07-11
NFR Letter Date Recorded:	2014-07-23
Site Type:	Industrial/Commercial
Comprehensive/Focused:	Comprehensive
Institutional Controls:	Groundwater use restriction/Building restriction
Barrier:	Asphalt barrier/Clean soil barrier/concrete barrier/Building foundation
Worker Caution:	True
Acres:	0.800
Remediation Applicant Name:	Mr. Douglas Romer
Remediation Applicant Company:	W2005 CMK Realty, L.L.C.

W2005 CMK REALTY L.L.C. (Continued) **S106346397**

Remediation Applicant Address:	6011 Connection Drive
Remediation Applicant Address 2:	Not reported
Remediation Applicant City,St,Zip:	Irving, TX 75039-
Illinois EPA:	0316006052
Site Name:	Ryerson-Lowes Parcel
NFR Letter:	2008-09-11
NFR Letter Date Recorded:	2008-10-22
Site Type:	Industrial/Commercial
Comprehensive/Focused:	Comprehensive
Institutional Controls:	Groundwater use restriction
Barrier:	Asphalt barrier/Clean soil barrier/Concrete barrier
Worker Caution:	True
Acres:	11.5

Remediation Applicant Name:	Mr. Douglas Romer
Remediation Applicant Company:	W2005 CMK Realty, L.L.C.
Remediation Applicant Address:	6011 Connection Drive
Remediation Applicant Address 2:	Not reported
Remediation Applicant City,St,Zip:	Irving, TX 75039-
Illinois EPA:	0316006052
Site Name:	Ryerson Parcels C, D, and G
NFR Letter:	2009-05-19
NFR Letter Date Recorded:	2009-07-06
Site Type:	Industrial/Commercial
Comprehensive/Focused:	Comprehensive
Institutional Controls:	Groundwater use restriction
Barrier:	Asphalt barrier/Clean soil barrier/Concrete barrier/Building foundation
Worker Caution:	True
Acres:	4.099

Remediation Applicant Name:	Mr. Douglas Romer
Remediation Applicant Company:	W2005 CMK Realty, L.L.C.
Remediation Applicant Address:	6011 Connection Drive
Remediation Applicant Address 2:	Not reported
Remediation Applicant City,St,Zip:	Irving, TX 75039-
Illinois EPA:	0316006052
Site Name:	Ryerson -Detention Ponds #1 and #2
NFR Letter:	2009-08-12
NFR Letter Date Recorded:	2009-09-17
Site Type:	Industrial/Commercial
Comprehensive/Focused:	Comprehensive
Institutional Controls:	Groundwater use restriction
Barrier:	Clean soil barrier
Worker Caution:	True
Acres:	2.5

IL EPA Id:	0316006052
US EPA Id:	IL0000086496
Longitude:	-87.63168
Latitude:	41.74237
Contact Name:	Thomas Brashler
Contact Address:	6 East Monroe Street
Contact Address2:	Suite 300
Contact City,St,Zip:	Chicago, IL 60603-
Contact Phone:	(312) 377-8356
Date Enrolled:	02/13/2004

W2005 CMK REALTY L.L.C. (Continued) **S106346397**

Point Of Contact:	Mark Santangelo
Consultant Company:	Pioneer Engineering & Environmental Services, Inc.
Consultant Address:	700 North Sacramento Boulevard
Consultant Address2:	Suite 101
Consultant City,St,Zip:	Chicago, IL 60612-
Consultant Phone:	(312) 587-1021
Proj Mgr Assigned:	Baldwin
Sec. 4 Letter Date:	Not reported
NFR Recorded:	06/24/2011
Active:	False
Total Acres:	0.800
No Further Remediation Letter Dt:	06/14/2011
Remediation Applicant Co:	W2005 CMK Realty, L.L.C.
Remediation Applicant Title:	Mr.
Remediation Applicant Name:	Mr. Thomas Brashler
Remediation Applicant Company:	W2005 CMK Realty, L.L.C.
Remediation Applicant Address:	30 West Monroe Street
Remediation Applicant Address 2:	Suite 1000
Remediation Applicant City,St,Zip:	Chicago, IL 60603-
Illinois EPA:	0316006052
Site Name:	Ryerson Parcels G
NFR Letter:	2011-06-14
NFR Letter Date Recorded:	2011-06-24
Site Type:	Industrial/Commercial
Comprehensive/Focused:	Comprehensive
Institutional Controls:	Groundwater use restriction
Barrier:	Asphalt barrier/Clean soil barrier/Concrete barrier/Building foundation
Worker Caution:	True
Acres:	1.72

Remediation Applicant Name:	Mr. Thomas Brashler
Remediation Applicant Company:	W2005 CMK Realty, L.L.C.
Remediation Applicant Address:	30 West Monroe Street
Remediation Applicant Address 2:	Suite 1000
Remediation Applicant City,St,Zip:	Chicago, IL 60603-
Illinois EPA:	0316006052
Site Name:	Ryerson Parcel-D
NFR Letter:	2011-06-14
NFR Letter Date Recorded:	2011-06-24
Site Type:	Industrial/Commercial
Comprehensive/Focused:	Comprehensive
Institutional Controls:	Groundwater use restriction
Barrier:	Asphalt barrier/Clean soil barrier/Concrete barrier/Building foundation
Worker Caution:	True
Acres:	1.070

Remediation Applicant Name:	Mr. Thomas Brashler
Remediation Applicant Company:	W2005 CMK Realty, L.L.C.
Remediation Applicant Address:	30 West Monroe Street
Remediation Applicant Address 2:	Suite 1000
Remediation Applicant City,St,Zip:	Chicago, IL 60603-
Illinois EPA:	0316006052
Site Name:	Ryerson Parcel C
NFR Letter:	2011-06-14
NFR Letter Date Recorded:	2011-06-24
Site Type:	Industrial/Commercial
Comprehensive/Focused:	Comprehensive

W2005 CMK REALTY L.L.C. (Continued) **S106346397**

Institutional Controls:	Groundwater use restriction
Barrier:	Asphalt barrier/Clean soil barrier/Concrete barrier/Building foundation
Worker Caution:	True
Acres:	1.189
Remediation Applicant Name:	Mr. Thomas Brashler
Remediation Applicant Company:	W2005 CMK Realty, L.L.C.
Remediation Applicant Address:	30 West Monroe Street
Remediation Applicant Address 2:	Suite 1000
Remediation Applicant City,St,Zip:	Chicago, IL 60603-
Illinois EPA:	0316006052
Site Name:	Ryerson Parcel P
NFR Letter:	2011-06-14
NFR Letter Date Recorded:	2011-06-24
Site Type:	Industrial/Commercial
Comprehensive/Focused:	Comprehensive
Institutional Controls:	Groundwater use restriction
Barrier:	Asphalt barrier/Clean soil barrier/Concrete barrier/Building foundation
Worker Caution:	True
Acres:	1.8
Remediation Applicant Name:	Mr. Thomas Brashler
Remediation Applicant Company:	W2005 CMK Realty, L.L.C.
Remediation Applicant Address:	30 West Monroe Street
Remediation Applicant Address 2:	Suite 1000
Remediation Applicant City,St,Zip:	Chicago, IL 60603-
Illinois EPA:	0316006052
Site Name:	Ryerson Parcel J
NFR Letter:	2012-12-24
NFR Letter Date Recorded:	2013-02-04
Site Type:	Industrial/Commercial
Comprehensive/Focused:	Comprehensive
Institutional Controls:	Groundwater use restriction
Barrier:	Asphalt barrier/Clean soil barrier/Concrete barrier/Building foundation
Worker Caution:	True
Acres:	13.69
Remediation Applicant Name:	Mr. Thomas Brashler
Remediation Applicant Company:	W2005 CMK Realty, L.L.C.
Remediation Applicant Address:	6 East Monroe Street
Remediation Applicant Address 2:	Suite 300
Remediation Applicant City,St,Zip:	Chicago, IL 60603-
Illinois EPA:	0316006052
Site Name:	Ryerson-Parcel E2
NFR Letter:	2014-07-11
NFR Letter Date Recorded:	2014-07-23
Site Type:	Industrial/Commercial
Comprehensive/Focused:	Comprehensive
Institutional Controls:	Groundwater use restriction/Building restriction
Barrier:	Asphalt barrier/Clean soil barrier/concrete barrier/Building foundation
Worker Caution:	True
Acres:	0.800
Remediation Applicant Name:	Mr. Douglas Romer
Remediation Applicant Company:	W2005 CMK Realty, L.L.C.
Remediation Applicant Address:	6011 Connection Drive
Remediation Applicant Address 2:	Not reported

W2005 CMK REALTY L.L.C. (Continued) **S106346397**

Remediation Applicant City,St,Zip:	Irving, TX 75039-
Illinois EPA:	0316006052
Site Name:	Ryerson-Lowes Parcel
NFR Letter:	2008-09-11
NFR Letter Date Recorded:	2008-10-22
Site Type:	Industrial/Commercial
Comprehensive/Focused:	Comprehensive
Institutional Controls:	Groundwater use restriction
Barrier:	Asphalt barrier/Clean soil barrier/Concrete barrier
Worker Caution:	True
Acres:	11.5

Remediation Applicant Name:	Mr. Douglas Romer
Remediation Applicant Company:	W2005 CMK Realty, L.L.C.
Remediation Applicant Address:	6011 Connection Drive
Remediation Applicant Address 2:	Not reported
Remediation Applicant City,St,Zip:	Irving, TX 75039-
Illinois EPA:	0316006052
Site Name:	Ryerson Parcels C, D, and G
NFR Letter:	2009-05-19
NFR Letter Date Recorded:	2009-07-06
Site Type:	Industrial/Commercial
Comprehensive/Focused:	Comprehensive
Institutional Controls:	Groundwater use restriction
Barrier:	Asphalt barrier/Clean soil barrier/Concrete barrier/Building foundation
Worker Caution:	True
Acres:	4.099

Remediation Applicant Name:	Mr. Douglas Romer
Remediation Applicant Company:	W2005 CMK Realty, L.L.C.
Remediation Applicant Address:	6011 Connection Drive
Remediation Applicant Address 2:	Not reported
Remediation Applicant City,St,Zip:	Irving, TX 75039-
Illinois EPA:	0316006052
Site Name:	Ryerson -Detention Ponds #1 and #2
NFR Letter:	2009-08-12
NFR Letter Date Recorded:	2009-09-17
Site Type:	Industrial/Commercial
Comprehensive/Focused:	Comprehensive
Institutional Controls:	Groundwater use restriction
Barrier:	Clean soil barrier
Worker Caution:	True
Acres:	2.5

IL EPA Id:	0316006052
US EPA Id:	IL0000086496
Longitude:	-87.63168
Latitude:	41.74237
Contact Name:	Thomas Brashler
Contact Address:	6 East Monroe Street
Contact Address2:	Suite 300
Contact City,St,Zip:	Chicago, IL 60603-
Contact Phone:	(312) 377-8356
Date Enrolled:	02/13/2004
Point Of Contact:	Mark Santangelo
Consultant Company:	Pioneer Engineering & Environmental Services, Inc.

W2005 CMK REALTY L.L.C. (Continued) **S106346397**

Consultant Address: 700 North Sacramento Boulevard
Consultant Address2: Suite 101
Consultant City,St,Zip: Chicago, IL 60612-
Consultant Phone: (312) 587-1021
Proj Mgr Assigned: Baldwin
Sec. 4 Letter Date: Not reported
NFR Recorded: 02/04/2013
Active: False
Total Acres: 0.800
No Further Remediation Letter Dt: 12/24/2012
Remediation Applicant Co: W2005 CMK Realty, L.L.C.
Remediation Applicant Title: Mr.
Remediation Applicant Name: Mr. Thomas Brashler
Remediation Applicant Company: W2005 CMK Realty, L.L.C.
Remediation Applicant Address: 30 West Monroe Street
Remediation Applicant Address 2: Suite 1000
Remediation Applicant City,St,Zip: Chicago, IL 60603-
Illinois EPA: 0316006052
Site Name: Ryerson Parcels G
NFR Letter: 2011-06-14
NFR Letter Date Recorded: 2011-06-24
Site Type: Industrial/Commercial
Comprehensive/Focused: Comprehensive
Institutional Controls: Groundwater use restriction
Barrier: Asphalt barrier/Clean soil barrier/Concrete barrier/Building foundation
Worker Caution: True
Acres: 1.72

Remediation Applicant Name: Mr. Thomas Brashler
Remediation Applicant Company: W2005 CMK Realty, L.L.C.
Remediation Applicant Address: 30 West Monroe Street
Remediation Applicant Address 2: Suite 1000
Remediation Applicant City,St,Zip: Chicago, IL 60603-
Illinois EPA: 0316006052
Site Name: Ryerson Parcel-D
NFR Letter: 2011-06-14
NFR Letter Date Recorded: 2011-06-24
Site Type: Industrial/Commercial
Comprehensive/Focused: Comprehensive
Institutional Controls: Groundwater use restriction
Barrier: Asphalt barrier/Clean soil barrier/Concrete barrier/Building foundation
Worker Caution: True
Acres: 1.070

Remediation Applicant Name: Mr. Thomas Brashler
Remediation Applicant Company: W2005 CMK Realty, L.L.C.
Remediation Applicant Address: 30 West Monroe Street
Remediation Applicant Address 2: Suite 1000
Remediation Applicant City,St,Zip: Chicago, IL 60603-
Illinois EPA: 0316006052
Site Name: Ryerson Parcel C
NFR Letter: 2011-06-14
NFR Letter Date Recorded: 2011-06-24
Site Type: Industrial/Commercial
Comprehensive/Focused: Comprehensive
Institutional Controls: Groundwater use restriction
Barrier: Asphalt barrier/Clean soil barrier/Concrete barrier/Building foundation

W2005 CMK REALTY L.L.C. (Continued) **S106346397**

Worker Caution:	True
Acres:	1.189
Remediation Applicant Name:	Mr. Thomas Brashler
Remediation Applicant Company:	W2005 CMK Realty, L.L.C.
Remediation Applicant Address:	30 West Monroe Street
Remediation Applicant Address 2:	Suite 1000
Remediation Applicant City,St,Zip:	Chicago, IL 60603-
Illinois EPA:	0316006052
Site Name:	Ryerson Parcel P
NFR Letter:	2011-06-14
NFR Letter Date Recorded:	2011-06-24
Site Type:	Industrial/Commercial
Comprehensive/Focused:	Comprehensive
Institutional Controls:	Groundwater use restriction
Barrier:	Asphalt barrier/Clean soil barrier/Concrete barrier/Building foundation
Worker Caution:	True
Acres:	1.8
Remediation Applicant Name:	Mr. Thomas Brashler
Remediation Applicant Company:	W2005 CMK Realty, L.L.C.
Remediation Applicant Address:	30 West Monroe Street
Remediation Applicant Address 2:	Suite 1000
Remediation Applicant City,St,Zip:	Chicago, IL 60603-
Illinois EPA:	0316006052
Site Name:	Ryerson Parcel J
NFR Letter:	2012-12-24
NFR Letter Date Recorded:	2013-02-04
Site Type:	Industrial/Commercial
Comprehensive/Focused:	Comprehensive
Institutional Controls:	Groundwater use restriction
Barrier:	Asphalt barrier/Clean soil barrier/Concrete barrier/Building foundation
Worker Caution:	True
Acres:	13.69
Remediation Applicant Name:	Mr. Thomas Brashler
Remediation Applicant Company:	W2005 CMK Realty. L.L.C.
Remediation Applicant Address:	6 East Monroe Street
Remediation Applicant Address 2:	Suite 300
Remediation Applicant City,St,Zip:	Chicago, IL 60603-
Illinois EPA:	0316006052
Site Name:	Ryerson-Parcel E2
NFR Letter:	2014-07-11
NFR Letter Date Recorded:	2014-07-23
Site Type:	Industrial/Commercial
Comprehensive/Focused:	Comprehensive
Institutional Controls:	Groundwater use restriction/Building restriction
Barrier:	Asphalt barrier/Clean soil barrier/concrete barrier/Building foundation
Worker Caution:	True
Acres:	0.800
Remediation Applicant Name:	Mr. Douglas Romer
Remediation Applicant Company:	W2005 CMK Realty, L.L.C.
Remediation Applicant Address:	6011 Connection Drive
Remediation Applicant Address 2:	Not reported
Remediation Applicant City,St,Zip:	Irving, TX 75039-
Illinois EPA:	0316006052

W2005 CMK REALTY L.L.C. (Continued) **S106346397**

Site Name:	Ryerson-Lowes Parcel
NFR Letter:	2008-09-11
NFR Letter Date Recorded:	2008-10-22
Site Type:	Industrial/Commercial
Comprehensive/Focused:	Comprehensive
Institutional Controls:	Groundwater use restriction
Barrier:	Asphalt barrier/Clean soil barrier/Concrete barrier
Worker Caution:	True
Acres:	11.5
Remediation Applicant Name:	Mr. Douglas Romer
Remediation Applicant Company:	W2005 CMK Realty, L.L.C.
Remediation Applicant Address:	6011 Connection Drive
Remediation Applicant Address 2:	Not reported
Remediation Applicant City,St,Zip:	Irving, TX 75039-
Illinois EPA:	0316006052
Site Name:	Ryerson Parcels C, D, and G
NFR Letter:	2009-05-19
NFR Letter Date Recorded:	2009-07-06
Site Type:	Industrial/Commercial
Comprehensive/Focused:	Comprehensive
Institutional Controls:	Groundwater use restriction
Barrier:	Asphalt barrier/Clean soil barrier/Concrete barrier/Building foundation
Worker Caution:	True
Acres:	4.099
Remediation Applicant Name:	Mr. Douglas Romer
Remediation Applicant Company:	W2005 CMK Realty, L.L.C.
Remediation Applicant Address:	6011 Connection Drive
Remediation Applicant Address 2:	Not reported
Remediation Applicant City,St,Zip:	Irving, TX 75039-
Illinois EPA:	0316006052
Site Name:	Ryerson -Detention Ponds #1 and #2
NFR Letter:	2009-08-12
NFR Letter Date Recorded:	2009-09-17
Site Type:	Industrial/Commercial
Comprehensive/Focused:	Comprehensive
Institutional Controls:	Groundwater use restriction
Barrier:	Clean soil barrier
Worker Caution:	True
Acres:	2.5

IL EPA Id:	0316006052
US EPA Id:	IL0000086496
Longitude:	-87.63168
Latitude:	41.74237
Contact Name:	Thomas Brashler
Contact Address:	6 East Monroe Street
Contact Address2:	Suite 300
Contact City,St,Zip:	Chicago, IL 60603-
Contact Phone:	(312) 377-8356
Date Enrolled:	02/13/2004
Point Of Contact:	Mark Santangelo
Consultant Company:	Pioneer Engineering & Environmental Services, Inc.
Consultant Address:	700 North Sacramento Boulevard
Consultant Address2:	Suite 101

W2005 CMK REALTY L.L.C. (Continued) **S106346397**

Consultant City,St,Zip:	Chicago, IL 60612-
Consultant Phone:	(312) 587-1021
Proj Mgr Assigned:	Baldwin
Sec. 4 Letter Date:	Not reported
NFR Recorded:	07/23/2014
Active:	False
Total Acres:	0.800
No Further Remediation Letter Dt:	07/11/2014
Remediation Applicant Co:	W2005 CMK Realty, L.L.C.
Remediation Applicant Title:	Mr.
Remediation Applicant Name:	Mr. Thomas Brashler
Remediation Applicant Company:	W2005 CMK Realty, L.L.C.
Remediation Applicant Address:	30 West Monroe Street
Remediation Applicant Address 2:	Suite 1000
Remediation Applicant City,St,Zip:	Chicago, IL 60603-
Illinois EPA:	0316006052
Site Name:	Ryerson Parcels G
NFR Letter:	2011-06-14
NFR Letter Date Recorded:	2011-06-24
Site Type:	Industrial/Commercial
Comprehensive/Focused:	Comprehensive
Institutional Controls:	Groundwater use restriction
Barrier:	Asphalt barrier/Clean soil barrier/Concrete barrier/Building foundation
Worker Caution:	True
Acres:	1.72

Remediation Applicant Name:	Mr. Thomas Brashler
Remediation Applicant Company:	W2005 CMK Realty, L.L.C.
Remediation Applicant Address:	30 West Monroe Street
Remediation Applicant Address 2:	Suite 1000
Remediation Applicant City,St,Zip:	Chicago, IL 60603-
Illinois EPA:	0316006052
Site Name:	Ryerson Parcel-D
NFR Letter:	2011-06-14
NFR Letter Date Recorded:	2011-06-24
Site Type:	Industrial/Commercial
Comprehensive/Focused:	Comprehensive
Institutional Controls:	Groundwater use restriction
Barrier:	Asphalt barrier/Clean soil barrier/Concrete barrier/Building foundation
Worker Caution:	True
Acres:	1.070

Remediation Applicant Name:	Mr. Thomas Brashler
Remediation Applicant Company:	W2005 CMK Realty, L.L.C.
Remediation Applicant Address:	30 West Monroe Street
Remediation Applicant Address 2:	Suite 1000
Remediation Applicant City,St,Zip:	Chicago, IL 60603-
Illinois EPA:	0316006052
Site Name:	Ryerson Parcel C
NFR Letter:	2011-06-14
NFR Letter Date Recorded:	2011-06-24
Site Type:	Industrial/Commercial
Comprehensive/Focused:	Comprehensive
Institutional Controls:	Groundwater use restriction
Barrier:	Asphalt barrier/Clean soil barrier/Concrete barrier/Building foundation
Worker Caution:	True
Acres:	1.189

W2005 CMK REALTY L.L.C. (Continued) **S106346397**

Remediation Applicant Name:	Mr. Thomas Brashler
Remediation Applicant Company:	W2005 CMK Realty, L.L.C.
Remediation Applicant Address:	30 West Monroe Street
Remediation Applicant Address 2:	Suite 1000
Remediation Applicant City,St,Zip:	Chicago, IL 60603-
Illinois EPA:	0316006052
Site Name:	Ryerson Parcel P
NFR Letter:	2011-06-14
NFR Letter Date Recorded:	2011-06-24
Site Type:	Industrial/Commercial
Comprehensive/Focused:	Comprehensive
Institutional Controls:	Groundwater use restriction
Barrier:	Asphalt barrier/Clean soil barrier/Concrete barrier/Building foundation
Worker Caution:	True
Acres:	1.8

Remediation Applicant Name:	Mr. Thomas Brashler
Remediation Applicant Company:	W2005 CMK Realty, L.L.C.
Remediation Applicant Address:	30 West Monroe Street
Remediation Applicant Address 2:	Suite 1000
Remediation Applicant City,St,Zip:	Chicago, IL 60603-
Illinois EPA:	0316006052
Site Name:	Ryerson Parcel J
NFR Letter:	2012-12-24
NFR Letter Date Recorded:	2013-02-04
Site Type:	Industrial/Commercial
Comprehensive/Focused:	Comprehensive
Institutional Controls:	Groundwater use restriction
Barrier:	Asphalt barrier/Clean soil barrier/Concrete barrier/Building foundation
Worker Caution:	True
Acres:	13.69

Remediation Applicant Name:	Mr. Thomas Brashler
Remediation Applicant Company:	W2005 CMK Realty, L.L.C.
Remediation Applicant Address:	6 East Monroe Street
Remediation Applicant Address 2:	Suite 300
Remediation Applicant City,St,Zip:	Chicago, IL 60603-
Illinois EPA:	0316006052
Site Name:	Ryerson-Parcel E2
NFR Letter:	2014-07-11
NFR Letter Date Recorded:	2014-07-23
Site Type:	Industrial/Commercial
Comprehensive/Focused:	Comprehensive
Institutional Controls:	Groundwater use restriction/Building restriction
Barrier:	Asphalt barrier/Clean soil barrier/concrete barrier/Building foundation
Worker Caution:	True
Acres:	0.800

Remediation Applicant Name:	Mr. Douglas Romer
Remediation Applicant Company:	W2005 CMK Realty, L.L.C.
Remediation Applicant Address:	6011 Connection Drive
Remediation Applicant Address 2:	Not reported
Remediation Applicant City,St,Zip:	Irving, TX 75039-
Illinois EPA:	0316006052
Site Name:	Ryerson-Lowes Parcel
NFR Letter:	2008-09-11
NFR Letter Date Recorded:	2008-10-22

W2005 CMK REALTY L.L.C. (Continued) **S106346397**

Site Type:	Industrial/Commercial
Comprehensive/Focused:	Comprehensive
Institutional Controls:	Groundwater use restriction
Barrier:	Asphalt barrier/Clean soil barrier/Concrete barrier
Worker Caution:	True
Acres:	11.5

Remediation Applicant Name:	Mr. Douglas Romer
Remediation Applicant Company:	W2005 CMK Realty, L.L.C.
Remediation Applicant Address:	6011 Connection Drive
Remediation Applicant Address 2:	Not reported
Remediation Applicant City,St,Zip:	Irving, TX 75039-
Illinois EPA:	0316006052
Site Name:	Ryerson Parcels C, D, and G
NFR Letter:	2009-05-19
NFR Letter Date Recorded:	2009-07-06
Site Type:	Industrial/Commercial
Comprehensive/Focused:	Comprehensive
Institutional Controls:	Groundwater use restriction
Barrier:	Asphalt barrier/Clean soil barrier/Concrete barrier/Building foundation
Worker Caution:	True
Acres:	4.099

Remediation Applicant Name:	Mr. Douglas Romer
Remediation Applicant Company:	W2005 CMK Realty, L.L.C.
Remediation Applicant Address:	6011 Connection Drive
Remediation Applicant Address 2:	Not reported
Remediation Applicant City,St,Zip:	Irving, TX 75039-
Illinois EPA:	0316006052
Site Name:	Ryerson -Detention Ponds #1 and #2
NFR Letter:	2009-08-12
NFR Letter Date Recorded:	2009-09-17
Site Type:	Industrial/Commercial
Comprehensive/Focused:	Comprehensive
Institutional Controls:	Groundwater use restriction
Barrier:	Clean soil barrier
Worker Caution:	True
Acres:	2.5

IL EPA Id:	0316006052
US EPA Id:	IL0000086496
Longitude:	-87.63168
Latitude:	41.74237
Contact Name:	Thomas Brashler
Contact Address:	6 East Monroe Street
Contact Address2:	Suite 300
Contact City,St,Zip:	Chicago, IL 60603-
Contact Phone:	(312) 377-8356
Date Enrolled:	02/13/2004
Point Of Contact:	Mark Santangelo
Consultant Company:	Pioneer Engineering & Environmental Services, Inc.
Consultant Address:	700 North Sacramento Boulevard
Consultant Address2:	Suite 101
Consultant City,St,Zip:	Chicago, IL 60612-
Consultant Phone:	(312) 587-1021
Proj Mgr Assigned:	Baldwin

W2005 CMK REALTY L.L.C. (Continued) **S106346397**

Sec. 4 Letter Date:	Not reported
NFR Recorded:	09/17/2009
Active:	False
Total Acres:	0.800
No Further Remediation Letter Dt:	08/12/2009
Remediation Applicant Co:	W2005 CMK Realty, L.L.C.
Remediation Applicant Title:	Mr.
Remediation Applicant Name:	Mr. Thomas Brashler
Remediation Applicant Company:	W2005 CMK Realty, L.L.C.
Remediation Applicant Address:	30 West Monroe Street
Remediation Applicant Address 2:	Suite 1000
Remediation Applicant City,St,Zip:	Chicago, IL 60603-
Illinois EPA:	0316006052
Site Name:	Ryerson Parcels G
NFR Letter:	2011-06-14
NFR Letter Date Recorded:	2011-06-24
Site Type:	Industrial/Commercial
Comprehensive/Focused:	Comprehensive
Institutional Controls:	Groundwater use restriction
Barrier:	Asphalt barrier/Clean soil barrier/Concrete barrier/Building foundation
Worker Caution:	True
Acres:	1.72

Remediation Applicant Name:	Mr. Thomas Brashler
Remediation Applicant Company:	W2005 CMK Realty, L.L.C.
Remediation Applicant Address:	30 West Monroe Street
Remediation Applicant Address 2:	Suite 1000
Remediation Applicant City,St,Zip:	Chicago, IL 60603-
Illinois EPA:	0316006052
Site Name:	Ryerson Parcel-D
NFR Letter:	2011-06-14
NFR Letter Date Recorded:	2011-06-24
Site Type:	Industrial/Commercial
Comprehensive/Focused:	Comprehensive
Institutional Controls:	Groundwater use restriction
Barrier:	Asphalt barrier/Clean soil barrier/Concrete barrier/Building foundation
Worker Caution:	True
Acres:	1.070

Remediation Applicant Name:	Mr. Thomas Brashler
Remediation Applicant Company:	W2005 CMK Realty, L.L.C.
Remediation Applicant Address:	30 West Monroe Street
Remediation Applicant Address 2:	Suite 1000
Remediation Applicant City,St,Zip:	Chicago, IL 60603-
Illinois EPA:	0316006052
Site Name:	Ryerson Parcel C
NFR Letter:	2011-06-14
NFR Letter Date Recorded:	2011-06-24
Site Type:	Industrial/Commercial
Comprehensive/Focused:	Comprehensive
Institutional Controls:	Groundwater use restriction
Barrier:	Asphalt barrier/Clean soil barrier/Concrete barrier/Building foundation
Worker Caution:	True
Acres:	1.189

Remediation Applicant Name:	Mr. Thomas Brashler
Remediation Applicant Company:	W2005 CMK Realty, L.L.C.

W2005 CMK REALTY L.L.C. (Continued) **S106346397**

Remediation Applicant Address:	30 West Monroe Street
Remediation Applicant Address 2:	Suite 1000
Remediation Applicant City,St,Zip:	Chicago, IL 60603-
Illinois EPA:	0316006052
Site Name:	Ryerson Parcel P
NFR Letter:	2011-06-14
NFR Letter Date Recorded:	2011-06-24
Site Type:	Industrial/Commercial
Comprehensive/Focused:	Comprehensive
Institutional Controls:	Groundwater use restriction
Barrier:	Asphalt barrier/Clean soil barrier/Concrete barrier/Building foundation
Worker Caution:	True
Acres:	1.8

Remediation Applicant Name:	Mr. Thomas Brashler
Remediation Applicant Company:	W2005 CMK Realty, L.L.C.
Remediation Applicant Address:	30 West Monroe Street
Remediation Applicant Address 2:	Suite 1000
Remediation Applicant City,St,Zip:	Chicago, IL 60603-
Illinois EPA:	0316006052
Site Name:	Ryerson Parcel J
NFR Letter:	2012-12-24
NFR Letter Date Recorded:	2013-02-04
Site Type:	Industrial/Commercial
Comprehensive/Focused:	Comprehensive
Institutional Controls:	Groundwater use restriction
Barrier:	Asphalt barrier/Clean soil barrier/Concrete barrier/Building foundation
Worker Caution:	True
Acres:	13.69

Remediation Applicant Name:	Mr. Thomas Brashler
Remediation Applicant Company:	W2005 CMK Realty. L.L.C.
Remediation Applicant Address:	6 East Monroe Street
Remediation Applicant Address 2:	Suite 300
Remediation Applicant City,St,Zip:	Chicago, IL 60603-
Illinois EPA:	0316006052
Site Name:	Ryerson-Parcel E2
NFR Letter:	2014-07-11
NFR Letter Date Recorded:	2014-07-23
Site Type:	Industrial/Commercial
Comprehensive/Focused:	Comprehensive
Institutional Controls:	Groundwater use restriction/Building restriction
Barrier:	Asphalt barrier/Clean soil barrier/concrete barrier/Building foundation
Worker Caution:	True
Acres:	0.800

Remediation Applicant Name:	Mr. Douglas Romer
Remediation Applicant Company:	W2005 CMK Realty, L.L.C.
Remediation Applicant Address:	6011 Connection Drive
Remediation Applicant Address 2:	Not reported
Remediation Applicant City,St,Zip:	Irving, TX 75039-
Illinois EPA:	0316006052
Site Name:	Ryerson-Lowes Parcel
NFR Letter:	2008-09-11
NFR Letter Date Recorded:	2008-10-22
Site Type:	Industrial/Commercial
Comprehensive/Focused:	Comprehensive

W2005 CMK REALTY L.L.C. (Continued) **S106346397**

Institutional Controls:	Groundwater use restriction
Barrier:	Asphalt barrier/Clean soil barrier/Concrete barrier
Worker Caution:	True
Acres:	11.5

Remediation Applicant Name:	Mr. Douglas Romer
Remediation Applicant Company:	W2005 CMK Realty, L.L.C.
Remediation Applicant Address:	6011 Connection Drive
Remediation Applicant Address 2:	Not reported
Remediation Applicant City,St,Zip:	Irving, TX 75039-
Illinois EPA:	0316006052
Site Name:	Ryerson Parcels C, D, and G
NFR Letter:	2009-05-19
NFR Letter Date Recorded:	2009-07-06
Site Type:	Industrial/Commercial
Comprehensive/Focused:	Comprehensive
Institutional Controls:	Groundwater use restriction
Barrier:	Asphalt barrier/Clean soil barrier/Concrete barrier/Building foundation
Worker Caution:	True
Acres:	4.099

Remediation Applicant Name:	Mr. Douglas Romer
Remediation Applicant Company:	W2005 CMK Realty, L.L.C.
Remediation Applicant Address:	6011 Connection Drive
Remediation Applicant Address 2:	Not reported
Remediation Applicant City,St,Zip:	Irving, TX 75039-
Illinois EPA:	0316006052
Site Name:	Ryerson -Detention Ponds #1 and #2
NFR Letter:	2009-08-12
NFR Letter Date Recorded:	2009-09-17
Site Type:	Industrial/Commercial
Comprehensive/Focused:	Comprehensive
Institutional Controls:	Groundwater use restriction
Barrier:	Clean soil barrier
Worker Caution:	True
Acres:	2.5

IL EPA Id:	0316006052
US EPA Id:	IL0000086496
Longitude:	-87.63168
Latitude:	41.74237
Contact Name:	Thomas Brashler
Contact Address:	6 East Monroe Street
Contact Address2:	Suite 300
Contact City,St,Zip:	Chicago, IL 60603-
Contact Phone:	(312) 377-8356
Date Enrolled:	02/13/2004
Point Of Contact:	Mark Santangelo
Consultant Company:	Pioneer Engineering & Environmental Services, Inc.
Consultant Address:	700 North Sacramento Boulevard
Consultant Address2:	Suite 101
Consultant City,St,Zip:	Chicago, IL 60612-
Consultant Phone:	(312) 587-1021
Proj Mgr Assigned:	Baldwin
Sec. 4 Letter Date:	Not reported
NFR Recorded:	07/06/2009

W2005 CMK REALTY L.L.C. (Continued) **S106346397**

Active:	False
Total Acres:	0.800
No Further Remediation Letter Dt:	05/19/2009
Remediation Applicant Co:	W2005 CMK Realty, L.L.C.
Remediation Applicant Title:	Mr.
Remediation Applicant Name:	Mr. Thomas Brashler
Remediation Applicant Company:	W2005 CMK Realty, L.L.C.
Remediation Applicant Address:	30 West Monroe Street
Remediation Applicant Address 2:	Suite 1000
Remediation Applicant City,St,Zip:	Chicago, IL 60603-
Illinois EPA:	0316006052
Site Name:	Ryerson Parcels G
NFR Letter:	2011-06-14
NFR Letter Date Recorded:	2011-06-24
Site Type:	Industrial/Commercial
Comprehensive/Focused:	Comprehensive
Institutional Controls:	Groundwater use restriction
Barrier:	Asphalt barrier/Clean soil barrier/Concrete barrier/Building foundation
Worker Caution:	True
Acres:	1.72

Remediation Applicant Name:	Mr. Thomas Brashler
Remediation Applicant Company:	W2005 CMK Realty, L.L.C.
Remediation Applicant Address:	30 West Monroe Street
Remediation Applicant Address 2:	Suite 1000
Remediation Applicant City,St,Zip:	Chicago, IL 60603-
Illinois EPA:	0316006052
Site Name:	Ryerson Parcel-D
NFR Letter:	2011-06-14
NFR Letter Date Recorded:	2011-06-24
Site Type:	Industrial/Commercial
Comprehensive/Focused:	Comprehensive
Institutional Controls:	Groundwater use restriction
Barrier:	Asphalt barrier/Clean soil barrier/Concrete barrier/Building foundation
Worker Caution:	True
Acres:	1.070

Remediation Applicant Name:	Mr. Thomas Brashler
Remediation Applicant Company:	W2005 CMK Realty, L.L.C.
Remediation Applicant Address:	30 West Monroe Street
Remediation Applicant Address 2:	Suite 1000
Remediation Applicant City,St,Zip:	Chicago, IL 60603-
Illinois EPA:	0316006052
Site Name:	Ryerson Parcel C
NFR Letter:	2011-06-14
NFR Letter Date Recorded:	2011-06-24
Site Type:	Industrial/Commercial
Comprehensive/Focused:	Comprehensive
Institutional Controls:	Groundwater use restriction
Barrier:	Asphalt barrier/Clean soil barrier/Concrete barrier/Building foundation
Worker Caution:	True
Acres:	1.189

Remediation Applicant Name:	Mr. Thomas Brashler
Remediation Applicant Company:	W2005 CMK Realty, L.L.C.
Remediation Applicant Address:	30 West Monroe Street
Remediation Applicant Address 2:	Suite 1000

W2005 CMK REALTY L.L.C. (Continued) **S106346397**

Remediation Applicant City,St,Zip:	Chicago, IL 60603-
Illinois EPA:	0316006052
Site Name:	Ryerson Parcel P
NFR Letter:	2011-06-14
NFR Letter Date Recorded:	2011-06-24
Site Type:	Industrial/Commercial
Comprehensive/Focused:	Comprehensive
Institutional Controls:	Groundwater use restriction
Barrier:	Asphalt barrier/Clean soil barrier/Concrete barrier/Building foundation
Worker Caution:	True
Acres:	1.8

Remediation Applicant Name:	Mr. Thomas Brashler
Remediation Applicant Company:	W2005 CMK Realty, L.L.C.
Remediation Applicant Address:	30 West Monroe Street
Remediation Applicant Address 2:	Suite 1000
Remediation Applicant City,St,Zip:	Chicago, IL 60603-
Illinois EPA:	0316006052
Site Name:	Ryerson Parcel J
NFR Letter:	2012-12-24
NFR Letter Date Recorded:	2013-02-04
Site Type:	Industrial/Commercial
Comprehensive/Focused:	Comprehensive
Institutional Controls:	Groundwater use restriction
Barrier:	Asphalt barrier/Clean soil barrier/Concrete barrier/Building foundation
Worker Caution:	True
Acres:	13.69

Remediation Applicant Name:	Mr. Thomas Brashler
Remediation Applicant Company:	W2005 CMK Realty, L.L.C.
Remediation Applicant Address:	6 East Monroe Street
Remediation Applicant Address 2:	Suite 300
Remediation Applicant City,St,Zip:	Chicago, IL 60603-
Illinois EPA:	0316006052
Site Name:	Ryerson-Parcel E2
NFR Letter:	2014-07-11
NFR Letter Date Recorded:	2014-07-23
Site Type:	Industrial/Commercial
Comprehensive/Focused:	Comprehensive
Institutional Controls:	Groundwater use restriction/Building restriction
Barrier:	Asphalt barrier/Clean soil barrier/concrete barrier/Building foundation
Worker Caution:	True
Acres:	0.800

Remediation Applicant Name:	Mr. Douglas Romer
Remediation Applicant Company:	W2005 CMK Realty, L.L.C.
Remediation Applicant Address:	6011 Connection Drive
Remediation Applicant Address 2:	Not reported
Remediation Applicant City,St,Zip:	Irving, TX 75039-
Illinois EPA:	0316006052
Site Name:	Ryerson-Lowes Parcel
NFR Letter:	2008-09-11
NFR Letter Date Recorded:	2008-10-22
Site Type:	Industrial/Commercial
Comprehensive/Focused:	Comprehensive
Institutional Controls:	Groundwater use restriction
Barrier:	Asphalt barrier/Clean soil barrier/Concrete barrier

W2005 CMK REALTY L.L.C. (Continued) **S106346397**

Worker Caution:	True
Acres:	11.5
Remediation Applicant Name:	Mr. Douglas Romer
Remediation Applicant Company:	W2005 CMK Realty, L.L.C.
Remediation Applicant Address:	6011 Connection Drive
Remediation Applicant Address 2:	Not reported
Remediation Applicant City,St,Zip:	Irving, TX 75039-
Illinois EPA:	0316006052
Site Name:	Ryerson Parcels C, D, and G
NFR Letter:	2009-05-19
NFR Letter Date Recorded:	2009-07-06
Site Type:	Industrial/Commercial
Comprehensive/Focused:	Comprehensive
Institutional Controls:	Groundwater use restriction
Barrier:	Asphalt barrier/Clean soil barrier/Concrete barrier/Building foundation
Worker Caution:	True
Acres:	4.099
Remediation Applicant Name:	Mr. Douglas Romer
Remediation Applicant Company:	W2005 CMK Realty, L.L.C.
Remediation Applicant Address:	6011 Connection Drive
Remediation Applicant Address 2:	Not reported
Remediation Applicant City,St,Zip:	Irving, TX 75039-
Illinois EPA:	0316006052
Site Name:	Ryerson -Detention Ponds #1 and #2
NFR Letter:	2009-08-12
NFR Letter Date Recorded:	2009-09-17
Site Type:	Industrial/Commercial
Comprehensive/Focused:	Comprehensive
Institutional Controls:	Groundwater use restriction
Barrier:	Clean soil barrier
Worker Caution:	True
Acres:	2.5

IL EPA Id:	0316006052
US EPA Id:	IL0000086496
Longitude:	-87.63168
Latitude:	41.74237
Contact Name:	Thomas Brashler
Contact Address:	6 East Monroe Street
Contact Address2:	Suite 300
Contact City,St,Zip:	Chicago, IL 60603-
Contact Phone:	(312) 377-8356
Date Enrolled:	02/13/2004
Point Of Contact:	Mark Santangelo
Consultant Company:	Pioneer Engineering & Environmental Services, Inc.
Consultant Address:	700 North Sacramento Boulevard
Consultant Address2:	Suite 101
Consultant City,St,Zip:	Chicago, IL 60612-
Consultant Phone:	(312) 587-1021
Proj Mgr Assigned:	Baldwin
Sec. 4 Letter Date:	Not reported
NFR Recorded:	10/22/2008
Active:	False
Total Acres:	0.800

W2005 CMK REALTY L.L.C. (Continued) **S106346397**

No Further Remediation Letter Dt:	09/11/2008
Remediation Applicant Co:	W2005 CMK Realty, L.L.C.
Remediation Applicant Title:	Mr.
Remediation Applicant Name:	Mr. Thomas Brashler
Remediation Applicant Company:	W2005 CMK Realty, L.L.C.
Remediation Applicant Address:	30 West Monroe Street
Remediation Applicant Address 2:	Suite 1000
Remediation Applicant City,St,Zip:	Chicago, IL 60603-
Illinois EPA:	0316006052
Site Name:	Ryerson Parcels G
NFR Letter:	2011-06-14
NFR Letter Date Recorded:	2011-06-24
Site Type:	Industrial/Commercial
Comprehensive/Focused:	Comprehensive
Institutional Controls:	Groundwater use restriction
Barrier:	Asphalt barrier/Clean soil barrier/Concrete barrier/Building foundation
Worker Caution:	True
Acres:	1.72

Remediation Applicant Name:	Mr. Thomas Brashler
Remediation Applicant Company:	W2005 CMK Realty, L.L.C.
Remediation Applicant Address:	30 West Monroe Street
Remediation Applicant Address 2:	Suite 1000
Remediation Applicant City,St,Zip:	Chicago, IL 60603-
Illinois EPA:	0316006052
Site Name:	Ryerson Parcel-D
NFR Letter:	2011-06-14
NFR Letter Date Recorded:	2011-06-24
Site Type:	Industrial/Commercial
Comprehensive/Focused:	Comprehensive
Institutional Controls:	Groundwater use restriction
Barrier:	Asphalt barrier/Clean soil barrier/Concrete barrier/Building foundation
Worker Caution:	True
Acres:	1.070

Remediation Applicant Name:	Mr. Thomas Brashler
Remediation Applicant Company:	W2005 CMK Realty, L.L.C.
Remediation Applicant Address:	30 West Monroe Street
Remediation Applicant Address 2:	Suite 1000
Remediation Applicant City,St,Zip:	Chicago, IL 60603-
Illinois EPA:	0316006052
Site Name:	Ryerson Parcel C
NFR Letter:	2011-06-14
NFR Letter Date Recorded:	2011-06-24
Site Type:	Industrial/Commercial
Comprehensive/Focused:	Comprehensive
Institutional Controls:	Groundwater use restriction
Barrier:	Asphalt barrier/Clean soil barrier/Concrete barrier/Building foundation
Worker Caution:	True
Acres:	1.189

Remediation Applicant Name:	Mr. Thomas Brashler
Remediation Applicant Company:	W2005 CMK Realty, L.L.C.
Remediation Applicant Address:	30 West Monroe Street
Remediation Applicant Address 2:	Suite 1000
Remediation Applicant City,St,Zip:	Chicago, IL 60603-
Illinois EPA:	0316006052

W2005 CMK REALTY L.L.C. (Continued) **S106346397**

Site Name:	Ryerson Parcel P
NFR Letter:	2011-06-14
NFR Letter Date Recorded:	2011-06-24
Site Type:	Industrial/Commercial
Comprehensive/Focused:	Comprehensive
Institutional Controls:	Groundwater use restriction
Barrier:	Asphalt barrier/Clean soil barrier/Concrete barrier/Building foundation
Worker Caution:	True
Acres:	1.8

Remediation Applicant Name:	Mr. Thomas Brashler
Remediation Applicant Company:	W2005 CMK Realty, L.L.C.
Remediation Applicant Address:	30 West Monroe Street
Remediation Applicant Address 2:	Suite 1000
Remediation Applicant City,St,Zip:	Chicago, IL 60603-
Illinois EPA:	0316006052
Site Name:	Ryerson Parcel J
NFR Letter:	2012-12-24
NFR Letter Date Recorded:	2013-02-04
Site Type:	Industrial/Commercial
Comprehensive/Focused:	Comprehensive
Institutional Controls:	Groundwater use restriction
Barrier:	Asphalt barrier/Clean soil barrier/Concrete barrier/Building foundation
Worker Caution:	True
Acres:	13.69

Remediation Applicant Name:	Mr. Thomas Brashler
Remediation Applicant Company:	W2005 CMK Realty, L.L.C.
Remediation Applicant Address:	6 East Monroe Street
Remediation Applicant Address 2:	Suite 300
Remediation Applicant City,St,Zip:	Chicago, IL 60603-
Illinois EPA:	0316006052
Site Name:	Ryerson-Parcel E2
NFR Letter:	2014-07-11
NFR Letter Date Recorded:	2014-07-23
Site Type:	Industrial/Commercial
Comprehensive/Focused:	Comprehensive
Institutional Controls:	Groundwater use restriction/Building restriction
Barrier:	Asphalt barrier/Clean soil barrier/concrete barrier/Building foundation
Worker Caution:	True
Acres:	0.800

Remediation Applicant Name:	Mr. Douglas Romer
Remediation Applicant Company:	W2005 CMK Realty, L.L.C.
Remediation Applicant Address:	6011 Connection Drive
Remediation Applicant Address 2:	Not reported
Remediation Applicant City,St,Zip:	Irving, TX 75039-
Illinois EPA:	0316006052
Site Name:	Ryerson-Lowes Parcel
NFR Letter:	2008-09-11
NFR Letter Date Recorded:	2008-10-22
Site Type:	Industrial/Commercial
Comprehensive/Focused:	Comprehensive
Institutional Controls:	Groundwater use restriction
Barrier:	Asphalt barrier/Clean soil barrier/Concrete barrier
Worker Caution:	True
Acres:	11.5

W2005 CMK REALTY L.L.C. (Continued) **S106346397**

Remediation Applicant Name:	Mr. Douglas Romer
Remediation Applicant Company:	W2005 CMK Realty, L.L.C.
Remediation Applicant Address:	6011 Connection Drive
Remediation Applicant Address 2:	Not reported
Remediation Applicant City,St,Zip:	Irving, TX 75039-
Illinois EPA:	0316006052
Site Name:	Ryerson Parcels C, D, and G
NFR Letter:	2009-05-19
NFR Letter Date Recorded:	2009-07-06
Site Type:	Industrial/Commercial
Comprehensive/Focused:	Comprehensive
Institutional Controls:	Groundwater use restriction
Barrier:	Asphalt barrier/Clean soil barrier/Concrete barrier/Building foundation
Worker Caution:	True
Acres:	4.099

Remediation Applicant Name:	Mr. Douglas Romer
Remediation Applicant Company:	W2005 CMK Realty, L.L.C.
Remediation Applicant Address:	6011 Connection Drive
Remediation Applicant Address 2:	Not reported
Remediation Applicant City,St,Zip:	Irving, TX 75039-
Illinois EPA:	0316006052
Site Name:	Ryerson -Detention Ponds #1 and #2
NFR Letter:	2009-08-12
NFR Letter Date Recorded:	2009-09-17
Site Type:	Industrial/Commercial
Comprehensive/Focused:	Comprehensive
Institutional Controls:	Groundwater use restriction
Barrier:	Clean soil barrier
Worker Caution:	True
Acres:	2.5

IL EPA Id:	0316006052
US EPA Id:	IL0000086496
Longitude:	-87.63168
Latitude:	41.74237
Contact Name:	Thomas Brashler
Contact Address:	6 East Monroe Street
Contact Address2:	Suite 300
Contact City,St,Zip:	Chicago, IL 60603-
Contact Phone:	(312) 377-8356
Date Enrolled:	02/13/2004
Point Of Contact:	Mark Santangelo
Consultant Company:	Pioneer Engineering & Environmental Services, Inc.
Consultant Address:	700 North Sacramento Boulevard
Consultant Address2:	Suite 101
Consultant City,St,Zip:	Chicago, IL 60612-
Consultant Phone:	(312) 587-1021
Proj Mgr Assigned:	Baldwin
Sec. 4 Letter Date:	Not reported
NFR Recorded:	Not reported
Active:	False
Total Acres:	0.800
No Further Remediation Letter Dt:	07/25/2008
Remediation Applicant Co:	W2005 CMK Realty, L.L.C.
Remediation Applicant Title:	Mr.

W2005 CMK REALTY L.L.C. (Continued) **S106346397**

Remediation Applicant Name:	Mr. Thomas Brashler
Remediation Applicant Company:	W2005 CMK Realty, L.L.C.
Remediation Applicant Address:	30 West Monroe Street
Remediation Applicant Address 2:	Suite 1000
Remediation Applicant City,St,Zip:	Chicago, IL 60603-
Illinois EPA:	0316006052
Site Name:	Ryerson Parcels G
NFR Letter:	2011-06-14
NFR Letter Date Recorded:	2011-06-24
Site Type:	Industrial/Commercial
Comprehensive/Focused:	Comprehensive
Institutional Controls:	Groundwater use restriction
Barrier:	Asphalt barrier/Clean soil barrier/Concrete barrier/Building foundation
Worker Caution:	True
Acres:	1.72

Remediation Applicant Name:	Mr. Thomas Brashler
Remediation Applicant Company:	W2005 CMK Realty, L.L.C.
Remediation Applicant Address:	30 West Monroe Street
Remediation Applicant Address 2:	Suite 1000
Remediation Applicant City,St,Zip:	Chicago, IL 60603-
Illinois EPA:	0316006052
Site Name:	Ryerson Parcel-D
NFR Letter:	2011-06-14
NFR Letter Date Recorded:	2011-06-24
Site Type:	Industrial/Commercial
Comprehensive/Focused:	Comprehensive
Institutional Controls:	Groundwater use restriction
Barrier:	Asphalt barrier/Clean soil barrier/Concrete barrier/Building foundation
Worker Caution:	True
Acres:	1.070

Remediation Applicant Name:	Mr. Thomas Brashler
Remediation Applicant Company:	W2005 CMK Realty, L.L.C.
Remediation Applicant Address:	30 West Monroe Street
Remediation Applicant Address 2:	Suite 1000
Remediation Applicant City,St,Zip:	Chicago, IL 60603-
Illinois EPA:	0316006052
Site Name:	Ryerson Parcel C
NFR Letter:	2011-06-14
NFR Letter Date Recorded:	2011-06-24
Site Type:	Industrial/Commercial
Comprehensive/Focused:	Comprehensive
Institutional Controls:	Groundwater use restriction
Barrier:	Asphalt barrier/Clean soil barrier/Concrete barrier/Building foundation
Worker Caution:	True
Acres:	1.189

Remediation Applicant Name:	Mr. Thomas Brashler
Remediation Applicant Company:	W2005 CMK Realty, L.L.C.
Remediation Applicant Address:	30 West Monroe Street
Remediation Applicant Address 2:	Suite 1000
Remediation Applicant City,St,Zip:	Chicago, IL 60603-
Illinois EPA:	0316006052
Site Name:	Ryerson Parcel P
NFR Letter:	2011-06-14
NFR Letter Date Recorded:	2011-06-24

W2005 CMK REALTY L.L.C. (Continued) **S106346397**

Site Type:	Industrial/Commercial
Comprehensive/Focused:	Comprehensive
Institutional Controls:	Groundwater use restriction
Barrier:	Asphalt barrier/Clean soil barrier/Concrete barrier/Building foundation
Worker Caution:	True
Acres:	1.8
Remediation Applicant Name:	Mr. Thomas Brashler
Remediation Applicant Company:	W2005 CMK Realty, L.L.C.
Remediation Applicant Address:	30 West Monroe Street
Remediation Applicant Address 2:	Suite 1000
Remediation Applicant City,St,Zip:	Chicago, IL 60603-
Illinois EPA:	0316006052
Site Name:	Ryerson Parcel J
NFR Letter:	2012-12-24
NFR Letter Date Recorded:	2013-02-04
Site Type:	Industrial/Commercial
Comprehensive/Focused:	Comprehensive
Institutional Controls:	Groundwater use restriction
Barrier:	Asphalt barrier/Clean soil barrier/Concrete barrier/Building foundation
Worker Caution:	True
Acres:	13.69
Remediation Applicant Name:	Mr. Thomas Brashler
Remediation Applicant Company:	W2005 CMK Realty, L.L.C.
Remediation Applicant Address:	6 East Monroe Street
Remediation Applicant Address 2:	Suite 300
Remediation Applicant City,St,Zip:	Chicago, IL 60603-
Illinois EPA:	0316006052
Site Name:	Ryerson-Parcel E2
NFR Letter:	2014-07-11
NFR Letter Date Recorded:	2014-07-23
Site Type:	Industrial/Commercial
Comprehensive/Focused:	Comprehensive
Institutional Controls:	Groundwater use restriction/Building restriction
Barrier:	Asphalt barrier/Clean soil barrier/concrete barrier/Building foundation
Worker Caution:	True
Acres:	0.800
Remediation Applicant Name:	Mr. Douglas Romer
Remediation Applicant Company:	W2005 CMK Realty, L.L.C.
Remediation Applicant Address:	6011 Connection Drive
Remediation Applicant Address 2:	Not reported
Remediation Applicant City,St,Zip:	Irving, TX 75039-
Illinois EPA:	0316006052
Site Name:	Ryerson-Lowes Parcel
NFR Letter:	2008-09-11
NFR Letter Date Recorded:	2008-10-22
Site Type:	Industrial/Commercial
Comprehensive/Focused:	Comprehensive
Institutional Controls:	Groundwater use restriction
Barrier:	Asphalt barrier/Clean soil barrier/Concrete barrier
Worker Caution:	True
Acres:	11.5
Remediation Applicant Name:	Mr. Douglas Romer
Remediation Applicant Company:	W2005 CMK Realty, L.L.C.

W2005 CMK REALTY L.L.C. (Continued) **S106346397**

Remediation Applicant Address:	6011 Connection Drive
Remediation Applicant Address 2:	Not reported
Remediation Applicant City,St,Zip:	Irving, TX 75039-
Illinois EPA:	0316006052
Site Name:	Ryerson Parcels C, D, and G
NFR Letter:	2009-05-19
NFR Letter Date Recorded:	2009-07-06
Site Type:	Industrial/Commercial
Comprehensive/Focused:	Comprehensive
Institutional Controls:	Groundwater use restriction
Barrier:	Asphalt barrier/Clean soil barrier/Concrete barrier/Building foundation
Worker Caution:	True
Acres:	4.099

Remediation Applicant Name:	Mr. Douglas Romer
Remediation Applicant Company:	W2005 CMK Realty, L.L.C.
Remediation Applicant Address:	6011 Connection Drive
Remediation Applicant Address 2:	Not reported
Remediation Applicant City,St,Zip:	Irving, TX 75039-
Illinois EPA:	0316006052
Site Name:	Ryerson -Detention Ponds #1 and #2
NFR Letter:	2009-08-12
NFR Letter Date Recorded:	2009-09-17
Site Type:	Industrial/Commercial
Comprehensive/Focused:	Comprehensive
Institutional Controls:	Groundwater use restriction
Barrier:	Clean soil barrier
Worker Caution:	True
Acres:	2.5

IL EPA Id:	0316006052
US EPA Id:	IL0000086496
Longitude:	-87.63168
Latitude:	41.74237
Contact Name:	Thomas Brashler
Contact Address:	6 East Monroe Street
Contact Address2:	Suite 300
Contact City,St,Zip:	Chicago, IL 60603-
Contact Phone:	(312) 377-8356
Date Enrolled:	02/13/2004
Point Of Contact:	Mark Santangelo
Consultant Company:	Pioneer Engineering & Environmental Services, Inc.
Consultant Address:	700 North Sacramento Boulevard
Consultant Address2:	Suite 101
Consultant City,St,Zip:	Chicago, IL 60612-
Consultant Phone:	(312) 587-1021
Proj Mgr Assigned:	Baldwin
Sec. 4 Letter Date:	Not reported
NFR Recorded:	Not reported
Active:	False
Total Acres:	0.800
No Further Remediation Letter Dt:	08/05/2008
Remediation Applicant Co:	W2005 CMK Realty, L.L.C.
Remediation Applicant Title:	Mr.
Remediation Applicant Name:	Mr. Thomas Brashler
Remediation Applicant Company:	W2005 CMK Realty, L.L.C.

W2005 CMK REALTY L.L.C. (Continued) **S106346397**

Remediation Applicant Address:	30 West Monroe Street
Remediation Applicant Address 2:	Suite 1000
Remediation Applicant City,St,Zip:	Chicago, IL 60603-
Illinois EPA:	0316006052
Site Name:	Ryerson Parcels G
NFR Letter:	2011-06-14
NFR Letter Date Recorded:	2011-06-24
Site Type:	Industrial/Commercial
Comprehensive/Focused:	Comprehensive
Institutional Controls:	Groundwater use restriction
Barrier:	Asphalt barrier/Clean soil barrier/Concrete barrier/Building foundation
Worker Caution:	True
Acres:	1.72

Remediation Applicant Name:	Mr. Thomas Brashler
Remediation Applicant Company:	W2005 CMK Realty, L.L.C.
Remediation Applicant Address:	30 West Monroe Street
Remediation Applicant Address 2:	Suite 1000
Remediation Applicant City,St,Zip:	Chicago, IL 60603-
Illinois EPA:	0316006052
Site Name:	Ryerson Parcel-D
NFR Letter:	2011-06-14
NFR Letter Date Recorded:	2011-06-24
Site Type:	Industrial/Commercial
Comprehensive/Focused:	Comprehensive
Institutional Controls:	Groundwater use restriction
Barrier:	Asphalt barrier/Clean soil barrier/Concrete barrier/Building foundation
Worker Caution:	True
Acres:	1.070

Remediation Applicant Name:	Mr. Thomas Brashler
Remediation Applicant Company:	W2005 CMK Realty, L.L.C.
Remediation Applicant Address:	30 West Monroe Street
Remediation Applicant Address 2:	Suite 1000
Remediation Applicant City,St,Zip:	Chicago, IL 60603-
Illinois EPA:	0316006052
Site Name:	Ryerson Parcel C
NFR Letter:	2011-06-14
NFR Letter Date Recorded:	2011-06-24
Site Type:	Industrial/Commercial
Comprehensive/Focused:	Comprehensive
Institutional Controls:	Groundwater use restriction
Barrier:	Asphalt barrier/Clean soil barrier/Concrete barrier/Building foundation
Worker Caution:	True
Acres:	1.189

Remediation Applicant Name:	Mr. Thomas Brashler
Remediation Applicant Company:	W2005 CMK Realty, L.L.C.
Remediation Applicant Address:	30 West Monroe Street
Remediation Applicant Address 2:	Suite 1000
Remediation Applicant City,St,Zip:	Chicago, IL 60603-
Illinois EPA:	0316006052
Site Name:	Ryerson Parcel P
NFR Letter:	2011-06-14
NFR Letter Date Recorded:	2011-06-24
Site Type:	Industrial/Commercial
Comprehensive/Focused:	Comprehensive

W2005 CMK REALTY L.L.C. (Continued) **S106346397**

Institutional Controls:	Groundwater use restriction
Barrier:	Asphalt barrier/Clean soil barrier/Concrete barrier/Building foundation
Worker Caution:	True
Acres:	1.8
Remediation Applicant Name:	Mr. Thomas Brashler
Remediation Applicant Company:	W2005 CMK Realty, L.L.C.
Remediation Applicant Address:	30 West Monroe Street
Remediation Applicant Address 2:	Suite 1000
Remediation Applicant City,St,Zip:	Chicago, IL 60603-
Illinois EPA:	0316006052
Site Name:	Ryerson Parcel J
NFR Letter:	2012-12-24
NFR Letter Date Recorded:	2013-02-04
Site Type:	Industrial/Commercial
Comprehensive/Focused:	Comprehensive
Institutional Controls:	Groundwater use restriction
Barrier:	Asphalt barrier/Clean soil barrier/Concrete barrier/Building foundation
Worker Caution:	True
Acres:	13.69
Remediation Applicant Name:	Mr. Thomas Brashler
Remediation Applicant Company:	W2005 CMK Realty. L.L.C.
Remediation Applicant Address:	6 East Monroe Street
Remediation Applicant Address 2:	Suite 300
Remediation Applicant City,St,Zip:	Chicago, IL 60603-
Illinois EPA:	0316006052
Site Name:	Ryerson-Parcel E2
NFR Letter:	2014-07-11
NFR Letter Date Recorded:	2014-07-23
Site Type:	Industrial/Commercial
Comprehensive/Focused:	Comprehensive
Institutional Controls:	Groundwater use restriction/Building restriction
Barrier:	Asphalt barrier/Clean soil barrier/concrete barrier/Building foundation
Worker Caution:	True
Acres:	0.800
Remediation Applicant Name:	Mr. Douglas Romer
Remediation Applicant Company:	W2005 CMK Realty, L.L.C.
Remediation Applicant Address:	6011 Connection Drive
Remediation Applicant Address 2:	Not reported
Remediation Applicant City,St,Zip:	Irving, TX 75039-
Illinois EPA:	0316006052
Site Name:	Ryerson-Lowes Parcel
NFR Letter:	2008-09-11
NFR Letter Date Recorded:	2008-10-22
Site Type:	Industrial/Commercial
Comprehensive/Focused:	Comprehensive
Institutional Controls:	Groundwater use restriction
Barrier:	Asphalt barrier/Clean soil barrier/Concrete barrier
Worker Caution:	True
Acres:	11.5
Remediation Applicant Name:	Mr. Douglas Romer
Remediation Applicant Company:	W2005 CMK Realty, L.L.C.
Remediation Applicant Address:	6011 Connection Drive
Remediation Applicant Address 2:	Not reported

W2005 CMK REALTY L.L.C. (Continued) **S106346397**

Remediation Applicant City,St,Zip:	Irving, TX 75039-
Illinois EPA:	0316006052
Site Name:	Ryerson Parcels C, D, and G
NFR Letter:	2009-05-19
NFR Letter Date Recorded:	2009-07-06
Site Type:	Industrial/Commercial
Comprehensive/Focused:	Comprehensive
Institutional Controls:	Groundwater use restriction
Barrier:	Asphalt barrier/Clean soil barrier/Concrete barrier/Building foundation
Worker Caution:	True
Acres:	4.099

Remediation Applicant Name:	Mr. Douglas Romer
Remediation Applicant Company:	W2005 CMK Realty, L.L.C.
Remediation Applicant Address:	6011 Connection Drive
Remediation Applicant Address 2:	Not reported
Remediation Applicant City,St,Zip:	Irving, TX 75039-
Illinois EPA:	0316006052
Site Name:	Ryerson -Detention Ponds #1 and #2
NFR Letter:	2009-08-12
NFR Letter Date Recorded:	2009-09-17
Site Type:	Industrial/Commercial
Comprehensive/Focused:	Comprehensive
Institutional Controls:	Groundwater use restriction
Barrier:	Clean soil barrier
Worker Caution:	True
Acres:	2.5

AC106 **CHICAGO ENV** **S116614770**
NE **409 W 80TH ST** **N/A**
1/4-1/2 **CHICAGO, IL**
0.347 mi.
1831 ft. **Site 3 of 3 in cluster AC**

Relative:
Lower

Actual:
592 ft.

CHICAGO ENV:

Map Location:	409 W 80TH STCHICAGO, IL(41.74893408000048, -87.63452720999965)
Complaints:	Y
Neshaps & Demolition Notices:	Y
Enforcement:	Not reported
Inspections:	Y
Permits:	Y
Tanks:	Not reported
Holds & Lust Nfr:	Not reported
Latitude:	41.74893408000048
Longitude:	-87.63452720999965

107
SW
1/4-1/2
0.352 mi.
1856 ft.

906 W 85TH ST
CHICAGO, IL

CHICAGO ENV **S116621065**
N/A

Relative:
Higher

Actual:
602 ft.

CHICAGO ENV:

Map Location:	906 W 85TH STCHICAGO, IL(41.73968373300045, -87.64644949399968)
Complaints:	Y
Neshaps & Demolition Notices:	Not reported
Enforcement:	Not reported
Inspections:	Y
Permits:	Not reported
Tanks:	Not reported
Holds & Lust Nfr:	Not reported
Latitude:	41.73968373300045
Longitude:	-87.64644949399968

AB108
East
1/4-1/2
0.362 mi.
1910 ft.

KEMMERER BOTTLING
300 WEST 83RD STREET
CHICAGO, IL 60620

Site 6 of 7 in cluster AB

LUST **S104527482**
N/A

Relative:
Lower

Actual:
592 ft.

LUST:

Incident Num:	892265
IL EPA Id:	0316715026
Product:	Unleaded Gas
IEMA Date:	11/07/1989
Project Manager:	Harris
Project Manager Phone:	Not reported
Email:	Not reported
PRP Name:	Kemmerer Bottling
PRP Contact:	John Kenney
PRP Address:	777 Joyce Rd.
PRP City,St,Zip:	Joliet, IL 60436
PRP Phone:	Not reported
Site Classification:	Not reported
Section 57.5(g) Letter:	731
Date Section 57.5(g) Letter:	Not reported
Non LUST Determination Letter:	Not reported
20 Report Received:	02/29/1992
45 Report Received:	02/29/1992
NFA/NFR Letter:	**10/06/1993**
NFR Date Recorded:	Not reported

AB109
East
1/4-1/2
0.362 mi.
1910 ft.

KEMMERER BOTTLING CO
300 W 83RD ST
CHICAGO, IL 60620

Site 7 of 7 in cluster AB

UST **U001142687**
CHICAGO ENV **N/A**
BOL

Relative:
Lower

Actual:
592 ft.

UST:

Facility ID:	2007493
Facility Status:	CLOSED
Facility Type:	**NONE**
Owner Id:	U0008352
Owner Name:	Kemmerer Bottling Group

KEMMERER BOTTLING CO (Continued) **U001142687**

Owner Address: 777 Joyce Rd
Owner City,St,Zip: Joliet, IL 60436

Tank Number: 1
Tank Status: Removed
Tank Capacity: 3000
Tank Substance: Gasoline
Last Used Date: Not reported
OSFM First Notify Date: 4/22/1986
Red Tag Issue Date: Not reported
Install Date: Not reported
Green Tag Decal: Not reported
Green Tag Issue Date: Not reported
Green Tag Expire Date: Not reported
Fee Due: Not reported
MOTOR FUEL PERMIT INSPECTION DATE: Not reported
MOTOR FUEL PERMIT EXPIRATION DATE: Not reported
MOTOR FUEL TYPE: Not reported
Pending Nov: N
IEMA: Not reported
Equipment Type: Not reported
Equipment: Not reported
Last Passing Date: Not reported
Test Expire Date: Not reported

Tank Number: 2
Tank Status: Removed
Tank Capacity: 2000
Tank Substance: Gasoline
Last Used Date: Not reported
OSFM First Notify Date: 4/22/1986
Red Tag Issue Date: Not reported
Install Date: Not reported
Green Tag Decal: Not reported
Green Tag Issue Date: Not reported
Green Tag Expire Date: Not reported
Fee Due: Not reported
MOTOR FUEL PERMIT INSPECTION DATE: Not reported
MOTOR FUEL PERMIT EXPIRATION DATE: Not reported
MOTOR FUEL TYPE: Not reported
Pending Nov: N
IEMA: Not reported
Equipment Type: Not reported
Equipment: Not reported
Last Passing Date: Not reported
Test Expire Date: Not reported

Tank Number: 3
Tank Status: Abandoned in place
Tank Capacity: 5000
Tank Substance: Diesel Fuel
Last Used Date: Not reported
OSFM First Notify Date: 4/22/1986
Red Tag Issue Date: Not reported
Install Date: Not reported

KEMMERER BOTTLING CO (Continued) **U001142687**

Green Tag Decal:	**Not reported**
Green Tag Issue Date:	**Not reported**
Green Tag Expire Date:	**Not reported**
Fee Due:	Not reported
MOTOR FUEL PERMIT INSPECTION DATE:	Not reported
MOTOR FUEL PERMIT EXPIRATION DATE:	Not reported
MOTOR FUEL TYPE:	Not reported
Pending Nov:	N
IEMA:	Not reported
Equipment Type:	Not reported
Equipment:	Not reported
Last Passing Date:	Not reported
Test Expire Date:	Not reported

CHICAGO ENV:

Map Location:	300 W 83RD STCHICAGO, IL(41.743567606000454, -87.63219142499969)
Complaints:	Not reported
Neshaps & Demolition Notices:	Y
Enforcement:	Not reported
Inspections:	Y
Permits:	Not reported
Tanks:	Y
Holds & Lust Nfr:	Not reported
Latitude:	41.743567606000454
Longitude:	-87.63219142499969

BOL:

Site Id:	170000538513
Inv Num:	0316715026
Interest Name:	Kemmerer Bottling
Interest Type:	BOL
Media Code:	LAND

AD110 **VACANT LOT** **CHICAGO ENV** **S113274293**
NE **442 W 79TH ST** **BOL** **N/A**
1/4-1/2 **CHICAGO, IL 60620**
0.364 mi.
1922 ft. **Site 1 of 4 in cluster AD**

Relative:
Lower

Actual:
596 ft.

CHICAGO ENV:

Map Location:	442 W 79TH PLCHICAGO, IL(41.74981590800047, -87.63543643299965)
Complaints:	Not reported
Neshaps & Demolition Notices:	Not reported
Enforcement:	Not reported
Inspections:	Y
Permits:	Not reported
Tanks:	Not reported
Holds & Lust Nfr:	Not reported
Latitude:	41.74981590800047
Longitude:	-87.63543643299965

BOL:

Site Id:	170001604921
Inv Num:	0316715198
Interest Name:	Vacant Lot
Interest Type:	BOL

VACANT LOT (Continued) **S113274293**

Media Code: LAND

AD111 **CHICAGO ENV** **S116615488**
NE **438 W 79TH PL** **N/A**
1/4-1/2 **CHICAGO, IL**
0.366 mi.
1934 ft. **Site 2 of 4 in cluster AD**

Relative: **Lower**
Actual: **596 ft.**

CHICAGO ENV:

Map Location:	438 W 79TH PLCHICAGO, IL(41.74981703600048, -87.63535553399964)
Complaints:	Not reported
Neshaps & Demolition Notices:	Y
Enforcement:	Not reported
Inspections:	Not reported
Permits:	Not reported
Tanks:	Not reported
Holds & Lust Nfr:	Not reported
Latitude:	41.74981703600048
Longitude:	-87.63535553399964

AE112 **CHICAGO ENV** **S116619459**
North **705 W 79TH ST** **N/A**
1/4-1/2 **CHICAGO, IL**
0.375 mi.
1979 ft. **Site 1 of 2 in cluster AE**

Relative: **Higher**
Actual: **601 ft.**

CHICAGO ENV:

Map Location:	705 W 79TH STCHICAGO, IL(41.75064261500046, -87.64181989199966)
Complaints:	Not reported
Neshaps & Demolition Notices:	Not reported
Enforcement:	Not reported
Inspections:	Not reported
Permits:	Not reported
Tanks:	Y
Holds & Lust Nfr:	Not reported
Latitude:	41.75064261500046
Longitude:	-87.64181989199966

AF113 **CHICAGO ENV** **S116618847**
North **649 W 79TH ST** **N/A**
1/4-1/2 **CHICAGO, IL**
0.376 mi.
1987 ft. **Site 1 of 5 in cluster AF**

Relative: **Higher**
Actual: **601 ft.**

CHICAGO ENV:

Map Location:	649 W 79TH STCHICAGO, IL(41.751202625000474, -87.60794971999968)
Complaints:	Not reported
Neshaps & Demolition Notices:	Y
Enforcement:	Not reported
Inspections:	Y
Permits:	Not reported
Tanks:	Not reported
Holds & Lust Nfr:	Not reported
Latitude:	41.751202625000474
Longitude:	-87.60794971999968

AD114 **CHICAGO ENV** **S116615015**
NE **419 W 79TH PL** **N/A**
1/4-1/2 **CHICAGO, IL**
0.377 mi.
1990 ft. **Site 3 of 4 in cluster AD**

Relative: CHICAGO ENV:
Lower Map Location: 419 W 79TH PLCHICAGO, IL(41.74976342500048, -87.63540052999969)
Complaints: Not reported
Actual: Neshaps & Demolition Notices: Y
596 ft. Enforcement: Not reported
Inspections: Not reported
Permits: Not reported
Tanks: Not reported
Holds & Lust Nfr: Not reported
Latitude: 41.74976342500048
Longitude: -87.63540052999969

---

115 **CHICAGO ENV** **S116618275**
North **615 W 79TH ST** **N/A**
1/4-1/2 **CHICAGO, IL**
0.378 mi.
1996 ft.

Relative: CHICAGO ENV:
Lower Map Location: 615 W 79TH STCHICAGO, IL(41.750665591000484, -87.64005224599964)
Complaints: Not reported
Actual: Neshaps & Demolition Notices: Not reported
595 ft. Enforcement: Not reported
Inspections: Not reported
Permits: Not reported
Tanks: Y
Holds & Lust Nfr: Not reported
Latitude: 41.750665591000484
Longitude: -87.64005224599964

AF116 **CHICAGO ENV** **S116618814**
North **646 W 79TH ST** **N/A**
1/4-1/2 **CHICAGO, IL**
0.378 mi.
1997 ft. **Site 2 of 5 in cluster AF**

Relative: CHICAGO ENV:
Higher Map Location: 646 W 79TH STCHICAGO, IL(41.75070829600048, -87.64116078699965)
Complaints: Not reported
Actual: Neshaps & Demolition Notices: Not reported
601 ft. Enforcement: Y
Inspections: Y
Permits: Not reported
Tanks: Not reported
Holds & Lust Nfr: Not reported
Latitude: 41.75070829600048
Longitude: -87.64116078699965

AE117 — **CHICAGO ENV** — **S116619713**
NNW — **723 W 79TH ST** — **N/A**
1/4-1/2 — **CHICAGO, IL**
0.379 mi.
1999 ft. — **Site 2 of 2 in cluster AE**

Relative: **Lower**
Actual: **599 ft.**

CHICAGO ENV:

Map Location:	723 W 79TH STCHICAGO, IL(41.75062302700047, -87.64258961599967)
Complaints:	Y
Neshaps & Demolition Notices:	Not reported
Enforcement:	Not reported
Inspections:	Not reported
Permits:	Not reported
Tanks:	Not reported
Holds & Lust Nfr:	Not reported
Latitude:	41.75062302700047
Longitude:	-87.64258961599967

AF118 — **CHICAGO ENV** — **S116618560**
North — **632 W 79TH ST** — **N/A**
1/4-1/2 — **CHICAGO, IL**
0.379 mi.
2000 ft. — **Site 3 of 5 in cluster AF**

Relative: **Lower**
Actual: **599 ft.**

CHICAGO ENV:

Map Location:	632 W 79TH STCHICAGO, IL(41.75070829600048, -87.64069065599966)
Complaints:	Not reported
Neshaps & Demolition Notices:	Not reported
Enforcement:	Not reported
Inspections:	Not reported
Permits:	Not reported
Tanks:	Y
Holds & Lust Nfr:	Not reported
Latitude:	41.75070829600048
Longitude:	-87.64069065599966

AF119 — **CHICAGO ENV** — **S116618449**
North — **624 W 79TH ST** — **N/A**
1/4-1/2 — **CHICAGO, IL**
0.379 mi.
2002 ft. — **Site 4 of 5 in cluster AF**

Relative: **Lower**
Actual: **596 ft.**

CHICAGO ENV:

Map Location:	624 W 79TH STCHICAGO, IL(41.750717514000485, -87.64021015499969)
Complaints:	Not reported
Neshaps & Demolition Notices:	Not reported
Enforcement:	Not reported
Inspections:	Not reported
Permits:	Not reported
Tanks:	Y
Holds & Lust Nfr:	Not reported
Latitude:	41.750717514000485
Longitude:	-87.64021015499969

AF120
North
1/4-1/2
0.380 mi.
2005 ft.

614 W 79TH ST
CHICAGO, IL

CHICAGO ENV **S116618252**
N/A

Site 5 of 5 in cluster AF

Relative:
Lower

Actual:
596 ft.

CHICAGO ENV:

Map Location:	614 W 79TH STCHICAGO, IL(41.750717514000485, -87.63985064299965)
Complaints:	Not reported
Neshaps & Demolition Notices:	Y
Enforcement:	Not reported
Inspections:	Not reported
Permits:	Not reported
Tanks:	Not reported
Holds & Lust Nfr:	Not reported
Latitude:	41.750717514000485
Longitude:	-87.63985064299965

AG121
NNE
1/4-1/2
0.380 mi.
2005 ft.

549 W 79TH ST
CHICAGO, IL

CHICAGO ENV **S116617399**
N/A

Site 1 of 2 in cluster AG

Relative:
Lower

Actual:
597 ft.

CHICAGO ENV:

Map Location:	549 W 79TH STCHICAGO, IL(41.750701793000474, -87.63825733299967)
Complaints:	Not reported
Neshaps & Demolition Notices:	Not reported
Enforcement:	Not reported
Inspections:	Y
Permits:	Not reported
Tanks:	Not reported
Holds & Lust Nfr:	Not reported
Latitude:	41.750701793000474
Longitude:	-87.63825733299967

AD122
NE
1/4-1/2
0.380 mi.
2005 ft.

416 W 79TH PL
CHICAGO, IL

CHICAGO ENV **S116614976**
N/A

Site 4 of 4 in cluster AD

Relative:
Lower

Actual:
596 ft.

CHICAGO ENV:

Map Location:	416 W 79TH PLCHICAGO, IL(41.749817582000446, -87.63529106399966)
Complaints:	Not reported
Neshaps & Demolition Notices:	Y
Enforcement:	Not reported
Inspections:	Not reported
Permits:	Not reported
Tanks:	Not reported
Holds & Lust Nfr:	Not reported
Latitude:	41.749817582000446
Longitude:	-87.63529106399966

AG123 **CHICAGO ENV** **S116617148**
NNE **533 W 79TH ST** **N/A**
1/4-1/2 **CHICAGO, IL**
0.381 mi.
2011 ft. **Site 2 of 2 in cluster AG**

Relative: **Lower**

Actual: **598 ft.**

CHICAGO ENV:

Map Location:	533 W 79TH STCHICAGO, IL(41.75070333800045, -87.63811831999965)
Complaints:	Not reported
Neshaps & Demolition Notices:	Y
Enforcement:	Not reported
Inspections:	Not reported
Permits:	Not reported
Tanks:	Not reported
Holds & Lust Nfr:	Not reported
Latitude:	41.75070333800045
Longitude:	-87.63811831999965

---

124 **PRINCETON & SMITH, INC.** **LUST** **S112205214**
East **8233 SOUTH PRINCETON AVENUE** **SPILLS** **N/A**
1/4-1/2 **CHICAGO, IL 60620** **ENG CONTROLS**
0.381 mi. **INST CONTROL**
2013 ft. **SRP**

Relative: **Lower**

Actual: **591 ft.**

LUST:

Incident Num:	20120948
IL EPA Id:	0316715244
Product:	Other Petro
IEMA Date:	09/07/2012
Project Manager:	Not reported
Project Manager Phone:	Not reported
Email:	Not reported
PRP Name:	Not reported
PRP Contact:	Not reported
PRP Address:	Not reported
PRP City,St,Zip:	Not reported
PRP Phone:	Not reported
Site Classification:	Not reported
Section 57.5(g) Letter:	734
Date Section 57.5(g) Letter:	Not reported
Non LUST Determination Letter:	Not reported
20 Report Received:	10/01/2012
45 Report Received:	10/26/2012
NFA/NFR Letter:	**03/05/2013**
NFR Date Recorded:	Not reported

SPILLS:

Incident ID:	NL870199
Incident Date:	Not reported
Date Received:	02/10/1987
Lust Ind:	Not reported
Facility Address:	8233 PRINCETON
Facility City:	CHICAGO
PRP Name:	ECONOMIC LABORATORIES
AC:	Not reported
Source Table:	dbo_OCIN_INDCIDENTHIS

ENGINEERING CONTROLS:

Illinois Epa Id:	0316715244

PRINCETON & SMITH, INC. (Continued) **S112205214**

NFR Letter: 03/05/2013
Date NFR Recorded: 04/11/2013
Type Of Site: Industrial/Commercial
Comprehensive / Focused: Focused
Remediation Applicant Title: Mr.
Remediation Applicant Name: Kirby Smith
RA Company: Princeton & Smith, Inc.
RA Address: 15020 South Ravibia Avenue
RA Secondary Address: Suite 20
RA City,St,Zip: Orland Park, IL 60462-
Institutional Controls: Groundwater use restriction
Engineered Barriers: Concrete barrier
Worker Caution: True
Acres: 2

IL INSTUTIONAL CONTROL:
Illinois EPA Id: 0316715244
NFR Letter: 03/05/2013
Date NFR Recorded: 04/11/2013
Type Of Site: Industrial/Commercial
Comprehensive / Focused: Focused
Remediation Applicant Title: Mr.
Remediation Applicant Name: Kirby Smith
RA Company: Princeton & Smith, Inc.
RA Address: 15020 South Ravibia Avenue
RA Secondary Address: Suite 20
RA City,St,Zip: Orland Park, IL 60462-
Institutional Controls: Groundwater use restriction
Engineered Barriers: Concrete barrier
Worker Caution: True
Acres: 2

SRP:
IL EPA Id: 0316715244
US EPA Id: Not reported
Longitude: -87.63091
Latitude: 41.74425
Contact Name: Kirby Smith
Contact Address: 15020 South Ravinia Avenue
Contact Address2: Suite 20
Contact City,St,Zip: Orland Park, IL 60462-
Contact Phone: (708) 268-0799
Date Enrolled: 10/25/2012
Point Of Contact: Steven C. Anderson
Consultant Company: Anderson Environmental Consulting, Inc.
Consultant Address: 6655 Main Street
Consultant Address2: Suite 110
Consultant City,St,Zip: Downers Grove, IL 60516-
Consultant Phone: (630) 725-0400
Proj Mgr Assigned: Twum
Sec. 4 Letter Date: Not reported
NFR Recorded: Not reported
Active: False
Total Acres: 2
No Further Remediation Letter Dt: 01/25/2013
Remediation Applicant Co: Princeton & Smith, Inc.

PRINCETON & SMITH, INC. (Continued) **S112205214**

Remediation Applicant Title:	Mr.
Remediation Applicant Name:	Mr. Kirby Smith
Remediation Applicant Company:	Princeton & Smith, Inc.
Remediation Applicant Address:	15020 South Ravibia Avenue
Remediation Applicant Address 2:	Suite 20
Remediation Applicant City,St,Zip:	Orland Park, IL 60462-
Illinois EPA:	0316715244
Site Name:	Princeton & Smith, Inc.
NFR Letter:	2013-03-05
NFR Letter Date Recorded:	2013-04-11
Site Type:	Industrial/Commercial
Comprehensive/Focused:	Focused
Institutional Controls:	Groundwater use restriction
Barrier:	Concrete barrier
Worker Caution:	True
Acres:	2

IL EPA Id:	0316715244
US EPA Id:	Not reported
Longitude:	-87.63091
Latitude:	41.74425
Contact Name:	Kirby Smith
Contact Address:	15020 South Ravinia Avenue
Contact Address2:	Suite 20
Contact City,St,Zip:	Orland Park, IL 60462-
Contact Phone:	(708) 268-0799
Date Enrolled:	10/25/2012
Point Of Contact:	Steven C. Anderson
Consultant Company:	Anderson Environmental Consulting, Inc.
Consultant Address:	6655 Main Street
Consultant Address2:	Suite 110
Consultant City,St,Zip:	Downers Grove, IL 60516-
Consultant Phone:	(630) 725-0400
Proj Mgr Assigned:	Twum
Sec. 4 Letter Date:	Not reported
NFR Recorded:	04/11/2013
Active:	False
Total Acres:	2
No Further Remediation Letter Dt:	03/05/2013
Remediation Applicant Co:	Princeton & Smith, Inc.
Remediation Applicant Title:	Mr.
Remediation Applicant Name:	Mr. Kirby Smith
Remediation Applicant Company:	Princeton & Smith, Inc.
Remediation Applicant Address:	15020 South Ravibia Avenue
Remediation Applicant Address 2:	Suite 20
Remediation Applicant City,St,Zip:	Orland Park, IL 60462-
Illinois EPA:	0316715244
Site Name:	Princeton & Smith, Inc.
NFR Letter:	2013-03-05
NFR Letter Date Recorded:	2013-04-11
Site Type:	Industrial/Commercial
Comprehensive/Focused:	Focused
Institutional Controls:	Groundwater use restriction
Barrier:	Concrete barrier
Worker Caution:	True
Acres:	2

AH125
NNW
1/4-1/2
0.384 mi.
2028 ft.

734 W 79TH ST
CHICAGO, IL

CHICAGO ENV **S116619848**
N/A

Site 1 of 3 in cluster AH

Relative:
Lower

Actual:
599 ft.

CHICAGO ENV:

Map Location:	734 W 79TH STCHICAGO, IL(41.750678336000476, -87.64295143299967)
Complaints:	Y
Neshaps & Demolition Notices:	Not reported
Enforcement:	Not reported
Inspections:	Y
Permits:	Not reported
Tanks:	Not reported
Holds & Lust Nfr:	Not reported
Latitude:	41.750678336000476
Longitude:	-87.64295143299967

AH126
NNW
1/4-1/2
0.385 mi.
2035 ft.

747 W 79TH ST
CHICAGO, IL

CHICAGO ENV **S116620014**
N/A

Site 2 of 3 in cluster AH

Relative:
Lower

Actual:
598 ft.

CHICAGO ENV:

Map Location:	747 W 79TH STCHICAGO, IL(41.750601435000476, -87.64358306099967)
Complaints:	Not reported
Neshaps & Demolition Notices:	Not reported
Enforcement:	Not reported
Inspections:	Not reported
Permits:	Y
Tanks:	Not reported
Holds & Lust Nfr:	Not reported
Latitude:	41.750601435000476
Longitude:	-87.64358306099967

AH127
NNW
1/4-1/2
0.388 mi.
2048 ft.

750 W 79TH ST
CHICAGO, IL

CHICAGO ENV **S116620041**
N/A

Site 3 of 3 in cluster AH

Relative:
Lower

Actual:
598 ft.

CHICAGO ENV:

Map Location:	750 W 79TH STCHICAGO, IL(41.75065759500046, -87.64359094899964)
Complaints:	Not reported
Neshaps & Demolition Notices:	Not reported
Enforcement:	Not reported
Inspections:	Y
Permits:	Not reported
Tanks:	Not reported
Holds & Lust Nfr:	Not reported
Latitude:	41.75065759500046
Longitude:	-87.64359094899964

AI128 **CHICAGO ENV** **S116620305**
NNW **801 W 79TH ST** **N/A**
1/4-1/2 **CHICAGO, IL**
0.402 mi.
2120 ft. **Site 1 of 10 in cluster AI**

Relative: CHICAGO ENV:
Lower Map Location: 801 W 79TH STCHICAGO, IL(41.750594736000494, -87.64415615299964)
Complaints: Not reported
Actual: Neshaps & Demolition Notices: Y
597 ft. Enforcement: Not reported
Inspections: Y
Permits: Not reported
Tanks: Not reported
Holds & Lust Nfr: Not reported
Latitude: 41.750594736000494
Longitude: -87.64415615299964

AI129 **CHICAGO ENV** **S116620281**
NNW **800 W 79TH ST** **N/A**
1/4-1/2 **CHICAGO, IL**
0.403 mi.
2129 ft. **Site 2 of 10 in cluster AI**

Relative: CHICAGO ENV:
Lower Map Location: 800 W 79TH STCHICAGO, IL(41.750648696000496, -87.64415615299964)
Complaints: Not reported
Actual: Neshaps & Demolition Notices: Y
597 ft. Enforcement: Not reported
Inspections: Not reported
Permits: Not reported
Tanks: Not reported
Holds & Lust Nfr: Not reported
Latitude: 41.750648696000496
Longitude: -87.64415615299964

AJ130 **CHICAGO ENV** **S116610912**
East **270 W 83RD ST** **N/A**
1/4-1/2 **CHICAGO, IL**
0.405 mi.
2136 ft. **Site 1 of 5 in cluster AJ**

Relative: CHICAGO ENV:
Lower Map Location: 270 W 83RD STCHICAGO, IL(41.743580247000466, -87.63090258099965)
Complaints: Not reported
Actual: Neshaps & Demolition Notices: Not reported
591 ft. Enforcement: Not reported
Inspections: Y
Permits: Y
Tanks: Not reported
Holds & Lust Nfr: Not reported
Latitude: 41.743580247000466
Longitude: -87.63090258099965

AK131 **CHICAGO ENV** **S116616148**
NNE **475 W 79TH ST** **N/A**
1/4-1/2 **CHICAGO, IL**
0.407 mi.
2147 ft. **Site 1 of 3 in cluster AK**

Relative: CHICAGO ENV:
Lower

Map Location:	475 W 79TH STCHICAGO, IL(41.75072316000046, -87.63648799899966)
Complaints:	Not reported
Neshaps & Demolition Notices:	Not reported
Enforcement:	Not reported
Inspections:	Not reported
Permits:	Y
Tanks:	Not reported
Holds & Lust Nfr:	Not reported
Latitude:	41.75072316000046
Longitude:	-87.63648799899966

Actual:
596 ft.

---

132 **FORMER SERVICE STATION** **LUST** **U003914194**
SSW **8654 SOUTH VINCENNES AVENUE** **UST** **N/A**
1/4-1/2 **CHICAGO, IL 60620**
0.411 mi.
2172 ft.

Relative: LUST:
Higher

Incident Num:	20091414
IL EPA Id:	0316715187
Product:	Gasoline
IEMA Date:	12/21/2009
Project Manager:	Not reported
Project Manager Phone:	Not reported
Email:	Not reported
PRP Name:	Not reported
PRP Contact:	Not reported
PRP Address:	Not reported
PRP City,St,Zip:	Not reported
PRP Phone:	Not reported
Site Classification:	Not reported
Section 57.5(g) Letter:	734
Date Section 57.5(g) Letter:	Not reported
Non LUST Determination Letter:	Not reported
20 Report Received:	Not reported
45 Report Received:	Not reported
NFA/NFR Letter:	**Not reported**
NFR Date Recorded:	Not reported

Actual:
603 ft.

Incident Num:	20031456
IL EPA Id:	0316715187
Product:	Unleaded Gas, Other Petro
IEMA Date:	10/03/2003
Project Manager:	Putrich
Project Manager Phone:	(217) 524-4827
Email:	Steve.Putrich@illinois.gov
PRP Name:	BP Products North America, Inc.
PRP Contact:	Harold Primack
PRP Address:	28100 Torch Parkway, 2S
PRP City,St,Zip:	Warrenville, IL 60555
PRP Phone:	6308367139
Site Classification:	Not reported
Section 57.5(g) Letter:	734

FORMER SERVICE STATION (Continued) **U003914194**

Date Section 57.5(g) Letter: Not reported
Non LUST Determination Letter: Not reported
20 Report Received: 10/15/2003
45 Report Received: 11/19/2003
NFA/NFR Letter: **Not reported**
NFR Date Recorded: Not reported

UST:
Facility ID: 2041831
Facility Status: INACTIVE
Facility Type: **NONE**
Owner Id: U0000552
Owner Name: BP Products North America, Inc.
Owner Address: P. O. Box 6038 Environmental Compliance Department
Owner City,St,Zip: Artesia, CA 90702

Tank Number: 1
Tank Status: **Out of service**
Tank Capacity: 6000
Tank Substance: Gasoline
Last Used Date: 1/1/1980
OSFM First Notify Date: 9/2/2003
Red Tag Issue Date: Not reported
Install Date: Not reported
Green Tag Decal: **Not reported**
Green Tag Issue Date: **Not reported**
Green Tag Expire Date: **Not reported**
Fee Due: $0.00
MOTOR FUEL PERMIT INSPECTION DATE: Not reported
MOTOR FUEL PERMIT EXPIRATION DATE: Not reported
MOTOR FUEL TYPE: Not reported
Pending Nov: N
IEMA: Not reported
Equipment Type: Not reported
Equipment: Not reported
Last Passing Date: Not reported
Test Expire Date: Not reported

Tank Number: 2
Tank Status: **Out of service**
Tank Capacity: 4000
Tank Substance: Gasoline
Last Used Date: 1/1/1980
OSFM First Notify Date: 9/2/2003
Red Tag Issue Date: Not reported
Install Date: Not reported
Green Tag Decal: **Not reported**
Green Tag Issue Date: **Not reported**
Green Tag Expire Date: **Not reported**
Fee Due: $0.00
MOTOR FUEL PERMIT INSPECTION DATE: Not reported
MOTOR FUEL PERMIT EXPIRATION DATE: Not reported
MOTOR FUEL TYPE: Not reported
Pending Nov: N
IEMA: Not reported
Equipment Type: Not reported

FORMER SERVICE STATION (Continued) **U003914194**

Equipment:	Not reported
Last Passing Date:	Not reported
Test Expire Date:	Not reported

Tank Number:	3
Tank Status:	**Out of service**
Tank Capacity:	4000
Tank Substance:	Gasoline
Last Used Date:	1/1/1980
OSFM First Notify Date:	9/2/2003
Red Tag Issue Date:	Not reported
Install Date:	Not reported
Green Tag Decal:	**Not reported**
Green Tag Issue Date:	**Not reported**
Green Tag Expire Date:	**Not reported**
Fee Due:	$0.00
MOTOR FUEL PERMIT INSPECTION DATE:	Not reported
MOTOR FUEL PERMIT EXPIRATION DATE:	Not reported
MOTOR FUEL TYPE:	Not reported
Pending Nov:	N
IEMA:	Not reported
Equipment Type:	Not reported
Equipment:	Not reported
Last Passing Date:	Not reported
Test Expire Date:	Not reported

Tank Number:	4
Tank Status:	**Out of service**
Tank Capacity:	550
Tank Substance:	Used Oil
Last Used Date:	1/1/1980
OSFM First Notify Date:	9/2/2003
Red Tag Issue Date:	Not reported
Install Date:	Not reported
Green Tag Decal:	**Not reported**
Green Tag Issue Date:	**Not reported**
Green Tag Expire Date:	**Not reported**
Fee Due:	$0.00
MOTOR FUEL PERMIT INSPECTION DATE:	Not reported
MOTOR FUEL PERMIT EXPIRATION DATE:	Not reported
MOTOR FUEL TYPE:	Not reported
Pending Nov:	N
IEMA:	Not reported
Equipment Type:	Not reported
Equipment:	Not reported
Last Passing Date:	Not reported
Test Expire Date:	Not reported

Tank Number:	5
Tank Status:	**Out of service**
Tank Capacity:	275
Tank Substance:	Kerosene
Last Used Date:	1/1/1980
OSFM First Notify Date:	9/2/2003

FORMER SERVICE STATION (Continued) **U003914194**

Red Tag Issue Date:	Not reported
Install Date:	Not reported
Green Tag Decal:	**Not reported**
Green Tag Issue Date:	**Not reported**
Green Tag Expire Date:	**Not reported**
Fee Due:	$0.00
MOTOR FUEL PERMIT INSPECTION DATE:	Not reported
MOTOR FUEL PERMIT EXPIRATION DATE:	Not reported
MOTOR FUEL TYPE:	Not reported
Pending Nov:	N
IEMA:	Not reported
Equipment Type:	Not reported
Equipment:	Not reported
Last Passing Date:	Not reported
Test Expire Date:	Not reported

AK133 **AUBURN LAKES VENTURE** **LUST S104967902**
NNE **7851 NORMAL ST.** **BOL N/A**
1/4-1/2 **CHICAGO, IL 60620**
0.412 mi.
2174 ft. **Site 2 of 3 in cluster AK**

Relative:
Lower

Actual:
596 ft.

LUST:

Incident Num:	20010319
IL EPA Id:	0316715160
Product:	Fuel Oil
IEMA Date:	02/22/2001
Project Manager:	Tucka
Project Manager Phone:	(217) 782-6762
Email:	Not reported
PRP Name:	Auburn Lakes Venture
PRP Contact:	Tim Lagos
PRP Address:	P.O. Box 683
PRP City,St,Zip:	Matteson, IL 60443
PRP Phone:	7082543552
Site Classification:	Not reported
Section 57.5(g) Letter:	732
Date Section 57.5(g) Letter:	06/21/2001
Non LUST Determination Letter:	Not reported
20 Report Received:	Not reported
45 Report Received:	Not reported
NFA/NFR Letter:	**Not reported**
NFR Date Recorded:	Not reported

BOL:

Site Id:	170000539184
Inv Num:	0316715160
Interest Name:	Auburn Lakes Venture
Interest Type:	BOL
Media Code:	LAND

AL134
NNE
1/4-1/2
0.413 mi.
2179 ft.

425 W 79TH ST
CHICAGO, IL

Site 1 of 4 in cluster AL

CHICAGO ENV | **S116615184**
N/A

Relative:
Lower

Actual:
596 ft.

CHICAGO ENV:

Map Location:	425 W 79TH STCHICAGO, IL(41.75073364600047, -87.6353509819997)
Complaints:	Y
Neshaps & Demolition Notices:	Y
Enforcement:	Not reported
Inspections:	Y
Permits:	Not reported
Tanks:	Not reported
Holds & Lust Nfr:	Not reported
Latitude:	41.75073364600047
Longitude:	-87.6353509819997

AI135
NNW
1/4-1/2
0.413 mi.
2179 ft.

811 W 79TH ST
CHICAGO, IL

Site 3 of 10 in cluster AI

CHICAGO ENV | **S116620377**
N/A

Relative:
Lower

Actual:
597 ft.

CHICAGO ENV:

Map Location:	811 W 79TH STCHICAGO, IL(41.750594736000494, -87.64444647499965)
Complaints:	Not reported
Neshaps & Demolition Notices:	Y
Enforcement:	Not reported
Inspections:	Y
Permits:	Not reported
Tanks:	Not reported
Holds & Lust Nfr:	Not reported
Latitude:	41.750594736000494
Longitude:	-87.64444647499965

AM136
NE
1/4-1/2
0.413 mi.
2180 ft.

HILL, JOHN
7936 SOUTH VINCENNES
CHICAGO, IL 60620

Site 1 of 2 in cluster AM

LUST | **S104522636**
N/A

Relative:
Lower

Actual:
595 ft.

LUST:

Incident Num:	950607
IL EPA Id:	0316715074
Product:	Gasoline
IEMA Date:	03/27/1995
Project Manager:	Harlow
Project Manager Phone:	(217) 524-7650
Email:	Robert.Harlow@illinois.gov
PRP Name:	John Hill
PRP Contact:	Not reported
PRP Address:	7936 South Vincennes
PRP City,St,Zip:	Chicago, IL 60620
PRP Phone:	Not reported
Site Classification:	Not reported
Section 57.5(g) Letter:	732
Date Section 57.5(g) Letter:	Not reported

HILL, JOHN (Continued) **S104522636**

Non LUST Determination Letter:	Not reported
20 Report Received:	11/22/1996
45 Report Received:	11/22/1996
NFA/NFR Letter:	**03/21/1997**
NFR Date Recorded:	03/21/1997

AI137 **CHICAGO ENV** **S116620394**
NNW **813 W 79TH ST** **N/A**
1/4-1/2 **CHICAGO, IL**
0.414 mi.
2184 ft. **Site 4 of 10 in cluster AI**

Relative: **Lower**
Actual: **597 ft.**

CHICAGO ENV:

Map Location:	813 W 79TH STCHICAGO, IL(41.750593067000466, -87.64503014999968)
Complaints:	Not reported
Neshaps & Demolition Notices:	Y
Enforcement:	Not reported
Inspections:	Not reported
Permits:	Not reported
Tanks:	Not reported
Holds & Lust Nfr:	Not reported
Latitude:	41.750593067000466
Longitude:	-87.64503014999968

AI138 **CHICAGO ENV** **S116620385**
NNW **812 W 79TH ST** **N/A**
1/4-1/2 **CHICAGO, IL**
0.416 mi.
2198 ft. **Site 5 of 10 in cluster AI**

Relative: **Lower**
Actual: **597 ft.**

CHICAGO ENV:

Map Location:	812 W 79TH STCHICAGO, IL(41.750648696000496, -87.64468756399964)
Complaints:	Not reported
Neshaps & Demolition Notices:	Y
Enforcement:	Not reported
Inspections:	Y
Permits:	Not reported
Tanks:	Not reported
Holds & Lust Nfr:	Not reported
Latitude:	41.750648696000496
Longitude:	-87.64468756399964

AK139 **CHICAGO ENV** **S116615658**
NNE **445 W 79TH ST** **N/A**
1/4-1/2 **CHICAGO, IL**
0.417 mi.
2201 ft. **Site 3 of 3 in cluster AK**

Relative: **Lower**
Actual: **596 ft.**

CHICAGO ENV:

Map Location:	445 W 79TH STCHICAGO, IL(41.750723276000485, -87.63634079199966)
Complaints:	Y
Neshaps & Demolition Notices:	Not reported
Enforcement:	Not reported
Inspections:	Not reported
Permits:	Y

(Continued) S116615658

Tanks: Not reported
Holds & Lust Nfr: Not reported
Latitude: 41.750723276000485
Longitude: -87.63634079199966

AI140 CHICAGO ENV S116620526
NNW **821 W 79TH ST** N/A
1/4-1/2 **CHICAGO, IL**
0.418 mi.
2206 ft. **Site 6 of 10 in cluster AI**

Relative: **Lower**

Actual: **596 ft.**

CHICAGO ENV:
Map Location: 821 W 79TH STCHICAGO, IL(41.750594736000494, -87.64490800699969)
Complaints: Not reported
Neshaps & Demolition Notices: Y
Enforcement: Not reported
Inspections: Y
Permits: Not reported
Tanks: Y
Holds & Lust Nfr: Y
Latitude: 41.750594736000494
Longitude: -87.64490800699969

AI141 **CHICAGO, CITY OF** SPILLS S111905917
NNW **825 W 79TH ST** BOL N/A
1/4-1/2 **CHICAGO, IL 60620** CHICAGO ENV
0.420 mi.
2217 ft. **Site 7 of 10 in cluster AI**

Relative: **Lower**

Actual: **596 ft.**

SPILLS:
Incident ID: 19992468
Incident Date: 11/01/1999
Date Received: 11/01/1999
Lust Ind: Yes
Facility Address: 825 W 79TH ST
Facility City: CHICAGO
PRP Name: BONDS & ASSOCIATES
AC: Not reported
Source Table: dbo_OCIN_INCIDENTCUR

BOL:
Site Id: 170000539077
Inv Num: 0316715147
Interest Name: Chicago, City Of
Interest Type: BOL
Media Code: LAND

CHICAGO ENV:
Map Location: 825 W 79TH STCHICAGO, IL(41.750594736000494, -87.64501822999966)
Complaints: Not reported
Neshaps & Demolition Notices: Not reported
Enforcement: Not reported
Inspections: Not reported
Permits: Y
Tanks: Not reported

CHICAGO, CITY OF (Continued) **S111905917**

Holds & Lust Nfr: Not reported
Latitude: 41.750594736000494
Longitude: -87.64501822999966

AI142 **CHICAGO, CITY OF** **LUST** **S105225859**
NNW **825 WEST 79TH ST.** **N/A**
1/4-1/2 **CHICAGO, IL 60620**
0.420 mi.
2217 ft. **Site 8 of 10 in cluster AI**

Relative:
Lower

Actual:
596 ft.

LUST:

Incident Num:	992468
IL EPA Id:	0316715147
Product:	Other Petro
IEMA Date:	11/01/1999
Project Manager:	Hamilton
Project Manager Phone:	(217) 782-6762
Email:	Not reported
PRP Name:	City of Chicago
PRP Contact:	Christ Kozick
PRP Address:	121 North LaSalle
PRP City,St,Zip:	Chicago, IL 60602
PRP Phone:	3127447949
Site Classification:	Not reported
Section 57.5(g) Letter:	732
Date Section 57.5(g) Letter:	Not reported
Non LUST Determination Letter:	Not reported
20 Report Received:	11/24/1999
45 Report Received:	01/31/2000
NFA/NFR Letter:	**04/28/2000**
NFR Date Recorded:	05/04/2000

Incident Num:	992474
IL EPA Id:	0316715147
Product:	Other Petro
IEMA Date:	11/02/1999
Project Manager:	Hamilton
Project Manager Phone:	(217) 782-6762
Email:	Not reported
PRP Name:	City of Chicago
PRP Contact:	Christ Kozicki
PRP Address:	121 North LaSalle
PRP City,St,Zip:	Chicago, IL 60602
PRP Phone:	3127447949
Site Classification:	Not reported
Section 57.5(g) Letter:	732
Date Section 57.5(g) Letter:	Not reported
Non LUST Determination Letter:	Not reported
20 Report Received:	11/24/1999
45 Report Received:	01/31/2000
NFA/NFR Letter:	**04/28/2000**
NFR Date Recorded:	05/04/2000

143
SSW
1/4-1/2
0.421 mi.
2222 ft.

851 W 86TH ST
CHICAGO, IL

CHICAGO ENV **S116620841**
N/A

Relative:
Higher

Actual:
609 ft.

CHICAGO ENV:

Map Location:	851 W 86TH STCHICAGO, IL(41.737823480000486, -87.64563048799965)
Complaints:	Not reported
Neshaps & Demolition Notices:	Y
Enforcement:	Not reported
Inspections:	Y
Permits:	Not reported
Tanks:	Not reported
Holds & Lust Nfr:	Not reported
Latitude:	41.737823480000486
Longitude:	-87.64563048799965

AI144
NNW
1/4-1/2
0.421 mi.
2225 ft.

820 W 79TH ST
CHICAGO, IL

Site 9 of 10 in cluster AI

CHICAGO ENV **S116620506**
N/A

Relative:
Lower

Actual:
597 ft.

CHICAGO ENV:

Map Location:	820 W 79TH STCHICAGO, IL(41.750648696000496, -87.64490800699969)
Complaints:	Not reported
Neshaps & Demolition Notices:	Y
Enforcement:	Not reported
Inspections:	Y
Permits:	Not reported
Tanks:	Not reported
Holds & Lust Nfr:	Not reported
Latitude:	41.750648696000496
Longitude:	-87.64490800699969

AI145
NNW
1/4-1/2
0.423 mi.
2232 ft.

822 W 79TH ST
CHICAGO, IL

Site 10 of 10 in cluster AI

CHICAGO ENV **S116620540**
N/A

Relative:
Lower

Actual:
597 ft.

CHICAGO ENV:

Map Location:	822 W 79TH STCHICAGO, IL(41.750648696000496, -87.64496311899967)
Complaints:	Not reported
Neshaps & Demolition Notices:	Y
Enforcement:	Not reported
Inspections:	Not reported
Permits:	Not reported
Tanks:	Not reported
Holds & Lust Nfr:	Not reported
Latitude:	41.750648696000496
Longitude:	-87.64496311899967

AN146 **CHICAGO ENV** **S116620668**
NNW **833 W 79TH ST** **N/A**
1/4-1/2 **CHICAGO, IL**
0.424 mi.
2239 ft. **Site 1 of 13 in cluster AN**

Relative: **Lower**

Actual: **596 ft.**

CHICAGO ENV:

Map Location:	833 W 79TH STCHICAGO, IL(41.75059254700045, -87.64539700899968)
Complaints:	Not reported
Neshaps & Demolition Notices:	Y
Enforcement:	Not reported
Inspections:	Not reported
Permits:	Not reported
Tanks:	Not reported
Holds & Lust Nfr:	Not reported
Latitude:	41.75059254700045
Longitude:	-87.64539700899968

AN147 **CHICAGO ENV** **S116620710**
NNW **837 W 79TH ST** **N/A**
1/4-1/2 **CHICAGO, IL**
0.426 mi.
2251 ft. **Site 2 of 13 in cluster AN**

Relative: **Lower**

Actual: **596 ft.**

CHICAGO ENV:

Map Location:	837 W 79TH STCHICAGO, IL(41.75059171400045, -87.64545342399964)
Complaints:	Not reported
Neshaps & Demolition Notices:	Not reported
Enforcement:	Not reported
Inspections:	Y
Permits:	Not reported
Tanks:	Not reported
Holds & Lust Nfr:	Not reported
Latitude:	41.75059171400045
Longitude:	-87.64545342399964

AN148 **839 WEST 79TH STREET BUILDING** **CHICAGO ENV** **S113274259**
NNW **839 W 79TH ST** **BOL** **N/A**
1/4-1/2 **CHICAGO, IL 60620**
0.428 mi.
2259 ft. **Site 3 of 13 in cluster AN**

Relative: **Lower**

Actual: **596 ft.**

CHICAGO ENV:

Map Location:	839 W 79TH STCHICAGO, IL(41.75058269700048, -87.64572958499969)
Complaints:	Y
Neshaps & Demolition Notices:	Y
Enforcement:	Not reported
Inspections:	Y
Permits:	Y
Tanks:	Y
Holds & Lust Nfr:	Not reported
Latitude:	41.75058269700048
Longitude:	-87.64572958499969

BOL:

Site Id:	170000539095
Inv Num:	0316715149
Interest Name:	839 West 79th Street Building

839 WEST 79TH STREET BUILDING (Continued) **S113274259**

Interest Type: BOL
Media Code: LAND

AN149 **CHICAGO ENV** **S116620649**
NNW **832 W 79TH ST** **N/A**
1/4-1/2 **CHICAGO, IL**
0.429 mi.
2267 ft. **Site 4 of 13 in cluster AN**

Relative: CHICAGO ENV:
Lower
Map Location: 832 W 79TH STCHICAGO, IL(41.75064837700046, -87.64550143299965)
Complaints: Not reported
Actual: Neshaps & Demolition Notices: Not reported
596 ft. Enforcement: Not reported
Inspections: Not reported
Permits: Not reported
Tanks: Y
Holds & Lust Nfr: Not reported
Latitude: 41.75064837700046
Longitude: -87.64550143299965

AN150 **CHICAGO ENV** **S116620680**
NNW **834 W 79TH ST** **N/A**
1/4-1/2 **CHICAGO, IL**
0.430 mi.
2272 ft. **Site 5 of 13 in cluster AN**

Relative: CHICAGO ENV:
Lower
Map Location: 834 W 79TH STCHICAGO, IL(41.75064607900049, -87.64542664699968)
Complaints: Not reported
Actual: Neshaps & Demolition Notices: Not reported
596 ft. Enforcement: Not reported
Inspections: Y
Permits: Not reported
Tanks: Not reported
Holds & Lust Nfr: Not reported
Latitude: 41.75064607900049
Longitude: -87.64542664699968

AN151 **CHICAGO ENV** **S116620702**
NNW **836 W 79TH ST** **N/A**
1/4-1/2 **CHICAGO, IL**
0.431 mi.
2277 ft. **Site 6 of 13 in cluster AN**

Relative: CHICAGO ENV:
Lower
Map Location: 836 W 79TH STCHICAGO, IL(41.750645662000466, -87.64545485499968)
Complaints: Not reported
Actual: Neshaps & Demolition Notices: Y
596 ft. Enforcement: Not reported
Inspections: Y
Permits: Not reported
Tanks: Not reported
Holds & Lust Nfr: Not reported
Latitude: 41.750645662000466

(Continued) S116620702

Longitude: -87.64545485499968

AL152 CHICAGO ENV S116615158
NNE **424 W 79TH ST** N/A
1/4-1/2 **CHICAGO, IL**
0.431 mi.
2278 ft. **Site 2 of 4 in cluster AL**

Relative: CHICAGO ENV:
Lower
Map Location: 424 W 79TH STCHICAGO, IL(41.75079040500049, -87.63527792299965)
Complaints: Not reported
Actual: Neshaps & Demolition Notices: Not reported
596 ft. Enforcement: Not reported
Inspections: Y
Permits: Not reported
Tanks: Not reported
Holds & Lust Nfr: Not reported
Latitude: 41.75079040500049
Longitude: -87.63527792299965

AN153 CHICAGO ENV S116620715
NNW **838 W 79TH ST** N/A
1/4-1/2 **CHICAGO, IL**
0.432 mi.
2282 ft. **Site 7 of 13 in cluster AN**

Relative: CHICAGO ENV:
Lower
Map Location: 838 W 79TH STCHICAGO, IL(41.750638006000486, -87.64559130999965)
Complaints: Not reported
Actual: Neshaps & Demolition Notices: Not reported
596 ft. Enforcement: Not reported
Inspections: Y
Permits: Y
Tanks: Not reported
Holds & Lust Nfr: Not reported
Latitude: 41.750638006000486
Longitude: -87.64559130999965

AJ154 **AMERICAN DEMOLITION CORP** SPILLS S110363674
East **250 W 83RD** AIRS N/A
1/4-1/2 **CHICAGO, IL 60620** BOL
0.432 mi. CHICAGO ENV
2283 ft. **Site 2 of 5 in cluster AJ**

Relative: SPILLS:
Lower
Incident ID: 20100632
Incident Date: Not reported
Actual: Date Received: Not reported
590 ft. Lust Ind: Yes
Facility Address: 250 W 83RD ST
Facility City: CHICAGO
PRP Name: Standard Bank & Trust
AC: Not reported
Source Table: dbo_tbl_CONSTRUCTION101

AMERICAN DEMOLITION CORP (Continued) **S110363674**

Incident ID: 20100632
Incident Date: Not reported
Date Received: 06/14/2010
Lust Ind: Yes
Facility Address: 250 W 83RD ST
Facility City: CHICAGO
PRP Name: STANDARD BANK & TRUST
AC: Not reported
Source Table: dbo_OCIN_INCIDENTCUR

IL AIRS:
Facility ID: Not reported
ID Number: 031600GWZ
Year: Not reported
Contact Name: Not reported
Contact Title: Not reported
Contact Tele: Not reported
Contact Extention: Not reported
Contact EMail: Not reported
Contact Fax: Not reported
Cease Operation Date: Not reported
SIC Code: 1795
Address Type Code: Not reported

Facility ID: Not reported
ID Number: 031600GWZ
Year: 2012
Contact Name: Not reported
Contact Title: Not reported
Contact Tele: Not reported
Contact Extention: Not reported
Contact EMail: Not reported
Contact Fax: Not reported
Cease Operation Date: Not reported
SIC Code: 1795
Address Type Code: Not reported

Detail:
Year: 2012
Id Num: 031600GWZ
Pollutant Code: PART
Tons Per Year: 2.9999999999999999E-2

Year: 2012
Id Num: 031600GWZ
Pollutant Code: PM10
Tons Per Year: 0

Year: 2012
Id Num: 031600GWZ
Pollutant Code: PM2_5
Tons Per Year: 0

Facility ID: Not reported
ID Number: 031600GWZ
Year: 2011

AMERICAN DEMOLITION CORP (Continued) **S110363674**

Contact Name: Not reported
Contact Title: Not reported
Contact Tele: Not reported
Contact Extention: Not reported
Contact EMail: Not reported
Contact Fax: Not reported
Cease Operation Date: Not reported
SIC Code: 1795
Address Type Code: Not reported

Detail:
Year: 2011
Id Num: 031600GWZ
Pollutant Code: PM2_5
Tons Per Year: 0

Year: 2011
Id Num: 031600GWZ
Pollutant Code: PM10
Tons Per Year: 0

Year: 2011
Id Num: 031600GWZ
Pollutant Code: PART
Tons Per Year: 0

Facility ID: Not reported
ID Number: 031600GWZ
Year: 2010
Contact Name: Not reported
Contact Title: Not reported
Contact Tele: Not reported
Contact Extention: Not reported
Contact EMail: Not reported
Contact Fax: Not reported
Cease Operation Date: Not reported
SIC Code: 1795
Address Type Code: Not reported

Detail:
Year: 2010
Id Num: 031600GWZ
Pollutant Code: PM2_5
Tons Per Year: 0.000101

Year: 2010
Id Num: 031600GWZ
Pollutant Code: PART
Tons Per Year: 0.39240000000000003

Year: 2010
Id Num: 031600GWZ
Pollutant Code: PM10
Tons Per Year: 0.24407999999999999

AMERICAN DEMOLITION CORP (Continued) **S110363674**

BOL:
- Site Id: 170001847973
- Inv Num: 0316715227
- Interest Name: 250 West 83rd LLC
- Interest Type: BOL
- Media Code: LAND

CHICAGO ENV:
- Map Location: 250 W 83RD STCHICAGO, IL(41.743577976000495, -87.63107140799968)
- Complaints: Y
- Neshaps & Demolition Notices: Y
- Enforcement: Not reported
- Inspections: Y
- Permits: Y
- Tanks: Y
- Holds & Lust Nfr: Not reported
- Latitude: 41.743577976000495
- Longitude: -87.63107140799968

AJ155 **250 WEST 83RD LLC** **LUST S110335774**
East **250 WEST 83RD STREET** **ENG CONTROLS N/A**
1/4-1/2 **CHICAGO, IL 60620** **INST CONTROL**
0.432 mi. **SRP**
2283 ft. **Site 3 of 5 in cluster AJ**

Relative:
Lower

Actual:
590 ft.

LUST:
- Incident Num: 20100632
- IL EPA Id: 0316715227
- Product: Other Petro
- IEMA Date: 06/14/2010
- Project Manager: Not reported
- Project Manager Phone: Not reported
- Email: Not reported
- PRP Name: Not reported
- PRP Contact: Not reported
- PRP Address: Not reported
- PRP City,St,Zip: Not reported
- PRP Phone: Not reported
- Site Classification: Not reported
- Section 57.5(g) Letter: 734
- Date Section 57.5(g) Letter: Not reported
- Non LUST Determination Letter: Not reported
- 20 Report Received: 12/17/2010
- 45 Report Received: 12/17/2010
- **NFA/NFR Letter: 07/14/2011**
- NFR Date Recorded: 07/28/2011

ENGINEERING CONTROLS:
- Illinois Epa Id: 0316715227
- NFR Letter: 07/14/2011
- Date NFR Recorded: 07/28/2011
- Type Of Site: Industrial/Commercial
- Comprehensive / Focused: Focused
- Remediation Applicant Title: Mr.
- Remediation Applicant Name: Warren Baker
- RA Company: 250 West 83rd LLC

250 WEST 83RD LLC (Continued) **S110335774**

RA Address: 2222 North Elston Avenue
RA Secondary Address: Not reported
RA City,St,Zip: Chicago, IL 60614-
Institutional Controls: Groundwater use restriction
Engineered Barriers: Asphalt barrier/Concrete barrier/Clean soil barrier
Worker Caution: True
Acres: 1.179

IL INSTUTIONAL CONTROL:
Illinois EPA Id: 0316715227
NFR Letter: 07/14/2011
Date NFR Recorded: 07/28/2011
Type Of Site: Industrial/Commercial
Comprehensive / Focused: Focused
Remediation Applicant Title: Mr.
Remediation Applicant Name: Warren Baker
RA Company: 250 West 83rd LLC
RA Address: 2222 North Elston Avenue
RA Secondary Address: Not reported
RA City,St,Zip: Chicago, IL 60614-
Institutional Controls: Groundwater use restriction
Engineered Barriers: Asphalt barrier/Concrete barrier/Clean soil barrier
Worker Caution: True
Acres: 1.179

SRP:
IL EPA Id: 0316715227
US EPA Id: Not reported
Longitude: -87.63106
Latitude: 41.74383
Contact Name: Warren Baker
Contact Address: 2222 North Elston Avenue
Contact Address2: Not reported
Contact City,St,Zip: Chicago, IL 60614-
Contact Phone: (773) 755-0600
Date Enrolled: 05/05/2010
Point Of Contact: Jeffrey McClelland, P.E.
Consultant Company: Pioneer Engineering & Environmental Services, Inc.
Consultant Address: 700 North Sacramento Boulevard
Consultant Address2: Suite 101
Consultant City,St,Zip: Chicago, IL 60612-
Consultant Phone: (773) 722-9200
Proj Mgr Assigned: Hall
Sec. 4 Letter Date: Not reported
NFR Recorded: 07/28/2011
Active: False
Total Acres: 1.179
No Further Remediation Letter Dt: 07/14/2011
Remediation Applicant Co: 250 West 83rd LLC
Remediation Applicant Title: Mr.
Remediation Applicant Name: Mr. Warren Baker
Remediation Applicant Company: 250 West 83rd LLC
Remediation Applicant Address: 2222 North Elston Avenue
Remediation Applicant Address 2: Not reported
Remediation Applicant City,St,Zip: Chicago, IL 60614-
Illinois EPA: 0316715227

250 WEST 83RD LLC (Continued) **S110335774**

Site Name:	250 West 83rd LLC
NFR Letter:	2011-07-14
NFR Letter Date Recorded:	2011-07-28
Site Type:	Industrial/Commercial
Comprehensive/Focused:	Focused
Institutional Controls:	Groundwater use restriction
Barrier:	Asphalt barrier/Concrete barrier/Clean soil barrier
Worker Caution:	True
Acres:	1.179

AN156 **CHICAGO ENV** **S116620731**
NNW **840 W 79TH ST** **N/A**
1/4-1/2 **CHICAGO, IL**
0.433 mi.
2286 ft. **Site 8 of 13 in cluster AN**

Relative: CHICAGO ENV:
Lower

Map Location:	840 W 79TH STCHICAGO, IL(41.750638006000486, -87.64568118899967)
Complaints:	Y
Actual: Neshaps & Demolition Notices:	Not reported
596 ft. Enforcement:	Not reported
Inspections:	Y
Permits:	Not reported
Tanks:	Not reported
Holds & Lust Nfr:	Not reported
Latitude:	41.750638006000486
Longitude:	-87.64568118899967

AL157 **CHICAGO ENV** **S116615102**
NNE **422 W 79TH ST** **N/A**
1/4-1/2 **CHICAGO, IL**
0.433 mi.
2288 ft. **Site 3 of 4 in cluster AL**

Relative: CHICAGO ENV:
Lower

Map Location:	422 W 79TH STCHICAGO, IL(41.75079040500049, -87.63521284799964)
Complaints:	Y
Actual: Neshaps & Demolition Notices:	Not reported
596 ft. Enforcement:	Not reported
Inspections:	Y
Permits:	Not reported
Tanks:	Not reported
Holds & Lust Nfr:	Not reported
Latitude:	41.75079040500049
Longitude:	-87.63521284799964

AN158
NNW
1/4-1/2
0.434 mi.
2290 ft.
Site 9 of 13 in cluster AN

842 W 79TH ST
CHICAGO, IL

CHICAGO ENV **S116620757**
N/A

Relative:
Lower

Actual:
596 ft.

CHICAGO ENV:

Map Location:	842 W 79TH STCHICAGO, IL(41.75064441300049, -87.64553947799965)
Complaints:	Not reported
Neshaps & Demolition Notices:	Y
Enforcement:	Not reported
Inspections:	Y
Permits:	Not reported
Tanks:	Not reported
Holds & Lust Nfr:	Not reported
Latitude:	41.75064441300049
Longitude:	-87.64553947799965

AL159
NNE
1/4-1/2
0.435 mi.
2297 ft.
Site 4 of 4 in cluster AL

420 W 79TH ST
CHICAGO, IL

CHICAGO ENV **S116615040**
N/A

Relative:
Lower

Actual:
596 ft.

CHICAGO ENV:

Map Location:	420 W 79TH STCHICAGO, IL(41.749817582000446, -87.63543048899965)
Complaints:	Not reported
Neshaps & Demolition Notices:	Not reported
Enforcement:	Y
Inspections:	Y
Permits:	Not reported
Tanks:	Not reported
Holds & Lust Nfr:	Not reported
Latitude:	41.749817582000446
Longitude:	-87.63543048899965

AN160
NNW
1/4-1/2
0.436 mi.
2300 ft.
Site 10 of 13 in cluster AN

855 W 79TH ST
CHICAGO, IL

CHICAGO ENV **S116620867**
N/A

Relative:
Lower

Actual:
596 ft.

CHICAGO ENV:

Map Location:	855 W 79TH STCHICAGO, IL(41.75058796600047, -87.64570729299965)
Complaints:	Not reported
Neshaps & Demolition Notices:	Y
Enforcement:	Not reported
Inspections:	Y
Permits:	Not reported
Tanks:	Not reported
Holds & Lust Nfr:	Not reported
Latitude:	41.75058796600047
Longitude:	-87.64570729299965

AN161 **CHICAGO ENV** **S116620795**
NNW **846 W 79TH ST** **N/A**
1/4-1/2 **CHICAGO, IL**
0.436 mi.
2300 ft. **Site 11 of 13 in cluster AN**

Relative: CHICAGO ENV:
Lower
Map Location: 846 W 79TH STCHICAGO, IL(41.750638006000486, -87.64598078099965)
Complaints: Not reported
Actual: Neshaps & Demolition Notices: Y
596 ft. Enforcement: Not reported
Inspections: Y
Permits: Not reported
Tanks: Not reported
Holds & Lust Nfr: Not reported
Latitude: 41.750638006000486
Longitude: -87.64598078099965

---

162 **CHICAGO ENV** **S116612016**
NE **310 W 80TH ST** **N/A**
1/4-1/2 **CHICAGO, IL**
0.437 mi.
2306 ft.

Relative: CHICAGO ENV:
Lower
Map Location: 310 W 80TH STCHICAGO, IL(41.74901903800048, -87.63229172199965)
Complaints: Not reported
Actual: Neshaps & Demolition Notices: Not reported
591 ft. Enforcement: Not reported
Inspections: Not reported
Permits: Y
Tanks: Not reported
Holds & Lust Nfr: Not reported
Latitude: 41.74901903800048
Longitude: -87.63229172199965

AN163 **CHICAGO ENV** **S116620826**
NNW **850 W 79TH ST** **N/A**
1/4-1/2 **CHICAGO, IL**
0.437 mi.
2309 ft. **Site 12 of 13 in cluster AN**

Relative: CHICAGO ENV:
Lower
Map Location: 850 W 79TH STCHICAGO, IL(41.75064274800047, -87.64565230899967)
Complaints: Not reported
Actual: Neshaps & Demolition Notices: Y
596 ft. Enforcement: Not reported
Inspections: Y
Permits: Not reported
Tanks: Not reported
Holds & Lust Nfr: Not reported
Latitude: 41.75064274800047
Longitude: -87.64565230899967

AN164 **CHICAGO ENV** **S116620875**
NNW **856 W 79TH ST** **N/A**
1/4-1/2 **CHICAGO, IL**
0.440 mi.
2324 ft. **Site 13 of 13 in cluster AN**

Relative: CHICAGO ENV:
Lower
Map Location: 856 W 79TH STCHICAGO, IL(41.750641499000494, -87.64573693099965)
Complaints: Not reported
Actual: Neshaps & Demolition Notices: Y
596 ft. Enforcement: Not reported
Inspections: Not reported
Permits: Not reported
Tanks: Not reported
Holds & Lust Nfr: Not reported
Latitude: 41.750641499000494
Longitude: -87.64573693099965

AJ165 **CHICAGO ENV** **S116609805**
East **235 W 83RD ST** **N/A**
1/4-1/2 **CHICAGO, IL**
0.449 mi.
2373 ft. **Site 4 of 5 in cluster AJ**

Relative: CHICAGO ENV:
Lower
Map Location: 235 W 83RD STCHICAGO, IL(41.74352266700049, -87.63111980299965)
Complaints: Not reported
Actual: Neshaps & Demolition Notices: Not reported
589 ft. Enforcement: Not reported
Inspections: Not reported
Permits: Not reported
Tanks: Y
Holds & Lust Nfr: Not reported
Latitude: 41.74352266700049
Longitude: -87.63111980299965

AJ166 **CHICAGO ENV** **S116609679**
East **233 W 83RD ST** **N/A**
1/4-1/2 **CHICAGO, IL**
0.452 mi.
2386 ft. **Site 5 of 5 in cluster AJ**

Relative: CHICAGO ENV:
Lower
Map Location: 233 W 83RD STCHICAGO, IL(41.74353152500049, -87.63057080999965)
Complaints: Not reported
Actual: Neshaps & Demolition Notices: Not reported
589 ft. Enforcement: Not reported
Inspections: Not reported
Permits: Not reported
Tanks: Y
Holds & Lust Nfr: Not reported
Latitude: 41.74353152500049
Longitude: -87.63057080999965

AM167 **CHICAGO ENV** **S116614527**
NE **400 W 79TH ST** **N/A**
1/4-1/2 **CHICAGO, IL**
0.455 mi.
2405 ft. **Site 2 of 2 in cluster AM**

Relative: CHICAGO ENV:
Lower
Map Location: 400 W 79TH STCHICAGO, IL(41.75078780300049, -87.63466076499964)
Complaints: Not reported
Actual: Neshaps & Demolition Notices: Not reported
595 ft. Enforcement: Not reported
Inspections: Not reported
Permits: Y
Tanks: Not reported
Holds & Lust Nfr: Not reported
Latitude: 41.75078780300049
Longitude: -87.63466076499964

AO168 **CHICAGO ENV** **S116620992**
NW **900 W 79TH ST** **N/A**
1/4-1/2 **CHICAGO, IL**
0.463 mi.
2443 ft. **Site 1 of 2 in cluster AO**

Relative: CHICAGO ENV:
Lower
Map Location: 900 W 79TH STCHICAGO, IL(41.7506276360005, -87.64662029799968)
Complaints: Y
Actual: Neshaps & Demolition Notices: Y
595 ft. Enforcement: Not reported
Inspections: Y
Permits: Y
Tanks: Not reported
Holds & Lust Nfr: Not reported
Latitude: 41.7506276360005
Longitude: -87.64662029799968

AO169 **MID AMERICAL INVESTMENT** **LUST** **S104523761**
NW **838-840 WEST 79TH ST.** **N/A**
1/4-1/2 **CHICAGO, IL 60601**
0.472 mi.
2490 ft. **Site 2 of 2 in cluster AO**

Relative: LUST:
Lower
Incident Num: 931945
IL EPA Id: 0316325184
Actual: Product: Fuel Oil
596 ft. IEMA Date: 07/21/1993
Project Manager: McGill
Project Manager Phone: (217) 524-5137
Email: Scott.McGill@illinois.gov
PRP Name: Mid Americal Investment
PRP Contact: George Hodges
PRP Address: 155 North Michigan Ave., Suite 500
PRP City,St,Zip: Chicago, IL 60601
PRP Phone: Not reported
Site Classification: Not reported
Section 57.5(g) Letter: 731
Date Section 57.5(g) Letter: Not reported

MID AMERICAL INVESTMENT (Continued) **S104523761**

Non LUST Determination Letter: Not reported
20 Report Received: 08/20/1993
45 Report Received: Not reported
NFA/NFR Letter: Not reported
NFR Date Recorded: Not reported

170
West
1/4-1/2
0.484 mi.
2557 ft.

8223 S ABERDEEN ST
CHICAGO, IL

CHICAGO ENV **S116620546**
N/A

Relative:
Higher

Actual:
601 ft.

CHICAGO ENV:
Map Location: 8223 S ABERDEEN STCHICAGO, IL(41.744351157000494, -87.65108423799967)
Complaints: Not reported
Neshaps & Demolition Notices: Not reported
Enforcement: Not reported
Inspections: Y
Permits: Not reported
Tanks: Not reported
Holds & Lust Nfr: Not reported
Latitude: 41.744351157000494
Longitude: -87.65108423799967

AP171
SSW
1/4-1/2
0.489 mi.
2581 ft.

849 W 86TH PL
CHICAGO, IL

Site 1 of 2 in cluster AP

CHICAGO ENV **S116620813**
N/A

Relative:
Higher

Actual:
609 ft.

CHICAGO ENV:
Map Location: 849 W 86TH PLCHICAGO, IL(41.73690639300048, -87.64568880899964)
Complaints: Not reported
Neshaps & Demolition Notices: Y
Enforcement: Not reported
Inspections: Not reported
Permits: Not reported
Tanks: Not reported
Holds & Lust Nfr: Not reported
Latitude: 41.73690639300048
Longitude: -87.64568880899964

AP172
SSW
1/4-1/2
0.490 mi.
2587 ft.

860 W 86TH PL
CHICAGO, IL

Site 2 of 2 in cluster AP

CHICAGO ENV **S116620892**
N/A

Relative:
Higher

Actual:
608 ft.

CHICAGO ENV:
Map Location: 860 W 86TH PLCHICAGO, IL(41.73695811700048, -87.64598078099965)
Complaints: Y
Neshaps & Demolition Notices: Not reported
Enforcement: Not reported
Inspections: Not reported
Permits: Not reported

(Continued) S116620892

Tanks: Not reported
Holds & Lust Nfr: Not reported
Latitude: 41.73695811700048
Longitude: -87.64598078099965

173
East
1/4-1/2
0.493 mi.
2604 ft.

201 W 83RD ST
CHICAGO, IL

CHICAGO ENV **S116608322**
N/A

Relative:
Lower

Actual:
589 ft.

CHICAGO ENV:
Map Location: 201 W 83RD STCHICAGO, IL(41.74354340800045, -87.62968982199965)
Complaints: Not reported
Neshaps & Demolition Notices: Not reported
Enforcement: Not reported
Inspections: Y
Permits: Not reported
Tanks: Y
Holds & Lust Nfr: Not reported
Latitude: 41.74354340800045
Longitude: -87.62968982199965

174
South
1/4-1/2
0.494 mi.
2609 ft.

656 W 87TH ST
CHICAGO, IL

CHICAGO ENV **S116618972**
N/A

Relative:
Lower

Actual:
600 ft.

CHICAGO ENV:
Map Location: 656 W 87TH STCHICAGO, IL(41.7362978590005, -87.64096144199965)
Complaints: Not reported
Neshaps & Demolition Notices: Y
Enforcement: Not reported
Inspections: Not reported
Permits: Not reported
Tanks: Not reported
Holds & Lust Nfr: Not reported
Latitude: 41.7362978590005
Longitude: -87.64096144199965

175
NW
1/4-1/2
0.497 mi.
2623 ft.

935 W 79TH ST
CHICAGO, IL

CHICAGO ENV **S116621378**
N/A

Relative:
Lower

Actual:
595 ft.

CHICAGO ENV:
Map Location: 935 W 79TH STCHICAGO, IL(41.750557941000466, -87.64782550999968)
Complaints: Not reported
Neshaps & Demolition Notices: Not reported
Enforcement: Not reported
Inspections: Not reported
Permits: Not reported
Tanks: Y

(Continued) **S116621378**

Holds & Lust Nfr:	Not reported
Latitude:	41.750557941000466
Longitude:	-87.64782550999968

Count: 2 records.

ORPHAN SUMMARY

City	EDR ID	Site Name	Site Address	Zip	Database(s)
CHICAGO	1006426238	76TH AND PARNELL	76TH AND PARNELL	60620	CERC-NFRAP
CHICAGO	S104792906	HUYNH, NAM	1328 WEST SUMMIT		LUST

GOVERNMENT RECORDS SEARCHED / DATA CURRENCY TRACKING

To maintain currency of the following federal and state databases, EDR contacts the appropriate governmental agency on a monthly or quarterly basis, as required.

Number of Days to Update: Provides confirmation that EDR is reporting records that have been updated within 90 days from the date the government agency made the information available to the public.

STANDARD ENVIRONMENTAL RECORDS

Federal NPL site list

NPL: National Priority List

National Priorities List (Superfund). The NPL is a subset of CERCLIS and identifies over 1,200 sites for priority cleanup under the Superfund Program. NPL sites may encompass relatively large areas. As such, EDR provides polygon coverage for over 1,000 NPL site boundaries produced by EPA's Environmental Photographic Interpretation Center (EPIC) and regional EPA offices.

Date of Government Version: 09/29/2014
Date Data Arrived at EDR: 10/08/2014
Date Made Active in Reports: 11/17/2014
Number of Days to Update: 40

Source: EPA
Telephone: N/A
Last EDR Contact: 01/08/2015
Next Scheduled EDR Contact: 04/20/2015
Data Release Frequency: Quarterly

NPL Site Boundaries

Sources:

EPA's Environmental Photographic Interpretation Center (EPIC)
Telephone: 202-564-7333

EPA Region 1
Telephone 617-918-1143

EPA Region 6
Telephone: 214-655-6659

EPA Region 3
Telephone 215-814-5418

EPA Region 7
Telephone: 913-551-7247

EPA Region 4
Telephone 404-562-8033

EPA Region 8
Telephone: 303-312-6774

EPA Region 5
Telephone 312-886-6686

EPA Region 9
Telephone: 415-947-4246

EPA Region 10
Telephone 206-553-8665

Proposed NPL: Proposed National Priority List Sites

A site that has been proposed for listing on the National Priorities List through the issuance of a proposed rule in the Federal Register. EPA then accepts public comments on the site, responds to the comments, and places on the NPL those sites that continue to meet the requirements for listing.

Date of Government Version: 09/29/2014
Date Data Arrived at EDR: 10/08/2014
Date Made Active in Reports: 11/17/2014
Number of Days to Update: 40

Source: EPA
Telephone: N/A
Last EDR Contact: 01/08/2015
Next Scheduled EDR Contact: 04/20/2015
Data Release Frequency: Quarterly

NPL LIENS: Federal Superfund Liens

Federal Superfund Liens. Under the authority granted the USEPA by CERCLA of 1980, the USEPA has the authority to file liens against real property in order to recover remedial action expenditures or when the property owner received notification of potential liability. USEPA compiles a listing of filed notices of Superfund Liens.

Date of Government Version: 10/15/1991
Date Data Arrived at EDR: 02/02/1994
Date Made Active in Reports: 03/30/1994
Number of Days to Update: 56

Source: EPA
Telephone: 202-564-4267
Last EDR Contact: 08/15/2011
Next Scheduled EDR Contact: 11/28/2011
Data Release Frequency: No Update Planned

GOVERNMENT RECORDS SEARCHED / DATA CURRENCY TRACKING

Federal Delisted NPL site list

DELISTED NPL: National Priority List Deletions
The National Oil and Hazardous Substances Pollution Contingency Plan (NCP) establishes the criteria that the EPA uses to delete sites from the NPL. In accordance with 40 CFR 300.425.(e), sites may be deleted from the NPL where no further response is appropriate.

Date of Government Version: 09/29/2014
Date Data Arrived at EDR: 10/08/2014
Date Made Active in Reports: 11/17/2014
Number of Days to Update: 40

Source: EPA
Telephone: N/A
Last EDR Contact: 01/08/2015
Next Scheduled EDR Contact: 04/20/2015
Data Release Frequency: Quarterly

Federal CERCLIS list

CERCLIS: Comprehensive Environmental Response, Compensation, and Liability Information System
CERCLIS contains data on potentially hazardous waste sites that have been reported to the USEPA by states, municipalities, private companies and private persons, pursuant to Section 103 of the Comprehensive Environmental Response, Compensation, and Liability Act (CERCLA). CERCLIS contains sites which are either proposed to or on the National Priorities List (NPL) and sites which are in the screening and assessment phase for possible inclusion on the NPL.

Date of Government Version: 10/25/2013
Date Data Arrived at EDR: 11/11/2013
Date Made Active in Reports: 02/13/2014
Number of Days to Update: 94

Source: EPA
Telephone: 703-412-9810
Last EDR Contact: 01/09/2015
Next Scheduled EDR Contact: 03/09/2015
Data Release Frequency: Quarterly

FEDERAL FACILITY: Federal Facility Site Information listing
A listing of National Priority List (NPL) and Base Realignment and Closure (BRAC) sites found in the Comprehensive Environmental Response, Compensation and Liability Information System (CERCLIS) Database where EPA Federal Facilities Restoration and Reuse Office is involved in cleanup activities.

Date of Government Version: 07/21/2014
Date Data Arrived at EDR: 10/07/2014
Date Made Active in Reports: 10/20/2014
Number of Days to Update: 13

Source: Environmental Protection Agency
Telephone: 703-603-8704
Last EDR Contact: 01/09/2015
Next Scheduled EDR Contact: 04/20/2015
Data Release Frequency: Varies

Federal CERCLIS NFRAP site List

CERCLIS-NFRAP: CERCLIS No Further Remedial Action Planned
Archived sites are sites that have been removed and archived from the inventory of CERCLIS sites. Archived status indicates that, to the best of EPA's knowledge, assessment at a site has been completed and that EPA has determined no further steps will be taken to list this site on the National Priorities List (NPL), unless information indicates this decision was not appropriate or other considerations require a recommendation for listing at a later time. This decision does not necessarily mean that there is no hazard associated with a given site; it only means that, based upon available information, the location is not judged to be a potential NPL site.

Date of Government Version: 10/25/2013
Date Data Arrived at EDR: 11/11/2013
Date Made Active in Reports: 02/13/2014
Number of Days to Update: 94

Source: EPA
Telephone: 703-412-9810
Last EDR Contact: 01/09/2015
Next Scheduled EDR Contact: 03/09/2015
Data Release Frequency: Quarterly

Federal RCRA CORRACTS facilities list

CORRACTS: Corrective Action Report
CORRACTS identifies hazardous waste handlers with RCRA corrective action activity.

Date of Government Version: 06/10/2014
Date Data Arrived at EDR: 07/02/2014
Date Made Active in Reports: 09/18/2014
Number of Days to Update: 78

Source: EPA
Telephone: 800-424-9346
Last EDR Contact: 12/29/2014
Next Scheduled EDR Contact: 04/13/2015
Data Release Frequency: Quarterly

Federal RCRA non-CORRACTS TSD facilities list

RCRA-TSDF: RCRA - Treatment, Storage and Disposal

RCRAInfo is EPA's comprehensive information system, providing access to data supporting the Resource Conservation and Recovery Act (RCRA) of 1976 and the Hazardous and Solid Waste Amendments (HSWA) of 1984. The database includes selective information on sites which generate, transport, store, treat and/or dispose of hazardous waste as defined by the Resource Conservation and Recovery Act (RCRA). Transporters are individuals or entities that move hazardous waste from the generator offsite to a facility that can recycle, treat, store, or dispose of the waste. TSDFs treat, store, or dispose of the waste.

Date of Government Version: 06/10/2014
Date Data Arrived at EDR: 07/02/2014
Date Made Active in Reports: 09/18/2014
Number of Days to Update: 78

Source: Environmental Protection Agency
Telephone: 312-886-6186
Last EDR Contact: 12/29/2014
Next Scheduled EDR Contact: 04/13/2015
Data Release Frequency: Quarterly

Federal RCRA generators list

RCRA-LQG: RCRA - Large Quantity Generators

RCRAInfo is EPA's comprehensive information system, providing access to data supporting the Resource Conservation and Recovery Act (RCRA) of 1976 and the Hazardous and Solid Waste Amendments (HSWA) of 1984. The database includes selective information on sites which generate, transport, store, treat and/or dispose of hazardous waste as defined by the Resource Conservation and Recovery Act (RCRA). Large quantity generators (LQGs) generate over 1,000 kilograms (kg) of hazardous waste, or over 1 kg of acutely hazardous waste per month.

Date of Government Version: 06/10/2014
Date Data Arrived at EDR: 07/02/2014
Date Made Active in Reports: 09/18/2014
Number of Days to Update: 78

Source: Environmental Protection Agency
Telephone: 312-886-6186
Last EDR Contact: 12/29/2014
Next Scheduled EDR Contact: 04/13/2015
Data Release Frequency: Quarterly

RCRA-SQG: RCRA - Small Quantity Generators

RCRAInfo is EPA's comprehensive information system, providing access to data supporting the Resource Conservation and Recovery Act (RCRA) of 1976 and the Hazardous and Solid Waste Amendments (HSWA) of 1984. The database includes selective information on sites which generate, transport, store, treat and/or dispose of hazardous waste as defined by the Resource Conservation and Recovery Act (RCRA). Small quantity generators (SQGs) generate between 100 kg and 1,000 kg of hazardous waste per month.

Date of Government Version: 06/10/2014
Date Data Arrived at EDR: 07/02/2014
Date Made Active in Reports: 09/18/2014
Number of Days to Update: 78

Source: Environmental Protection Agency
Telephone: 312-886-6186
Last EDR Contact: 12/29/2014
Next Scheduled EDR Contact: 04/13/2015
Data Release Frequency: Quarterly

RCRA-CESQG: RCRA - Conditionally Exempt Small Quantity Generators

RCRAInfo is EPA's comprehensive information system, providing access to data supporting the Resource Conservation and Recovery Act (RCRA) of 1976 and the Hazardous and Solid Waste Amendments (HSWA) of 1984. The database includes selective information on sites which generate, transport, store, treat and/or dispose of hazardous waste as defined by the Resource Conservation and Recovery Act (RCRA). Conditionally exempt small quantity generators (CESQGs) generate less than 100 kg of hazardous waste, or less than 1 kg of acutely hazardous waste per month.

Date of Government Version: 06/10/2014
Date Data Arrived at EDR: 07/02/2014
Date Made Active in Reports: 09/18/2014
Number of Days to Update: 78

Source: Environmental Protection Agency
Telephone: 312-886-6186
Last EDR Contact: 12/29/2014
Next Scheduled EDR Contact: 04/13/2015
Data Release Frequency: Varies

GOVERNMENT RECORDS SEARCHED / DATA CURRENCY TRACKING

Federal institutional controls / engineering controls registries

US ENG CONTROLS: Engineering Controls Sites List

A listing of sites with engineering controls in place. Engineering controls include various forms of caps, building foundations, liners, and treatment methods to create pathway elimination for regulated substances to enter environmental media or effect human health.

Date of Government Version: 09/18/2014
Date Data Arrived at EDR: 09/19/2014
Date Made Active in Reports: 10/20/2014
Number of Days to Update: 31

Source: Environmental Protection Agency
Telephone: 703-603-0695
Last EDR Contact: 12/03/2014
Next Scheduled EDR Contact: 03/16/2015
Data Release Frequency: Varies

US INST CONTROL: Sites with Institutional Controls

A listing of sites with institutional controls in place. Institutional controls include administrative measures, such as groundwater use restrictions, construction restrictions, property use restrictions, and post remediation care requirements intended to prevent exposure to contaminants remaining on site. Deed restrictions are generally required as part of the institutional controls.

Date of Government Version: 09/18/2014
Date Data Arrived at EDR: 09/19/2014
Date Made Active in Reports: 10/20/2014
Number of Days to Update: 31

Source: Environmental Protection Agency
Telephone: 703-603-0695
Last EDR Contact: 12/03/2014
Next Scheduled EDR Contact: 03/16/2015
Data Release Frequency: Varies

LUCIS: Land Use Control Information System

LUCIS contains records of land use control information pertaining to the former Navy Base Realignment and Closure properties.

Date of Government Version: 08/29/2014
Date Data Arrived at EDR: 10/09/2014
Date Made Active in Reports: 10/20/2014
Number of Days to Update: 11

Source: Department of the Navy
Telephone: 843-820-7326
Last EDR Contact: 11/17/2014
Next Scheduled EDR Contact: 03/02/2015
Data Release Frequency: Varies

Federal ERNS list

ERNS: Emergency Response Notification System

Emergency Response Notification System. ERNS records and stores information on reported releases of oil and hazardous substances.

Date of Government Version: 09/29/2014
Date Data Arrived at EDR: 09/30/2014
Date Made Active in Reports: 11/06/2014
Number of Days to Update: 37

Source: National Response Center, United States Coast Guard
Telephone: 202-267-2180
Last EDR Contact: 12/29/2014
Next Scheduled EDR Contact: 04/13/2015
Data Release Frequency: Annually

State- and tribal - equivalent CERCLIS

SSU: State Sites Unit Listing

The State Response Action Program database identifies the status of all sites under the responsibility of the Illinois EPA's State Sites Unit.

Date of Government Version: 08/12/2014
Date Data Arrived at EDR: 08/14/2014
Date Made Active in Reports: 09/11/2014
Number of Days to Update: 28

Source: Illinois Environmental Protection Agency
Telephone: 217-524-4826
Last EDR Contact: 10/27/2014
Next Scheduled EDR Contact: 02/09/2015
Data Release Frequency: Semi-Annually

State and tribal landfill and/or solid waste disposal site lists

GOVERNMENT RECORDS SEARCHED / DATA CURRENCY TRACKING

LF WMRC: Waste Management & Research Center Landfill Database

The Waste Management & Research Center Landfill Database includes records from the Department of Public Health, Department of Mines & Minerals, Illinois Environmental Protection Agency, State Geological Survey, Northeastern Illinois Planning Commission and Pollution Control Board.

Date of Government Version: 12/31/2001
Date Data Arrived at EDR: 10/06/2006
Date Made Active in Reports: 11/06/2006
Number of Days to Update: 31

Source: Department of Natural Resources
Telephone: 217-333-8940
Last EDR Contact: 09/18/2009
Next Scheduled EDR Contact: 12/28/2009
Data Release Frequency: No Update Planned

SWF/LF: Available Disposal for Solid Waste in Illinois - Solid Waste Landfills Subject to State Surcharge

Solid Waste Facilities/Landfill Sites. SWF/LF type records typically contain an inventory of solid waste disposal facilities or landfills in a particular state. Depending on the state, these may be active or inactive facilities or open dumps that failed to meet RCRA Subtitle D Section 4004 criteria for solid waste landfills or disposal sites.

Date of Government Version: 12/31/2013
Date Data Arrived at EDR: 07/31/2014
Date Made Active in Reports: 09/08/2014
Number of Days to Update: 39

Source: Illinois Environmental Protection Agency
Telephone: 217-785-8604
Last EDR Contact: 10/27/2014
Next Scheduled EDR Contact: 02/09/2015
Data Release Frequency: Annually

LF SPECIAL WASTE: Special Waste Site List

These landfills, as of January 1, 1990, accept non-hazardous special waste pursuant to the Illinois EPA Non-Hazardous Special Waste Definition. List A includes landfills that may receive any non-hazardous waste, Non-Regional Pollution Control Facilities are so noted. List B includes landfills designed to receive specific non-hazardous wastes. List B landfills are designated as a Regional Pollution Control Facility by RPCF, or Non-Regional Pollution Control Facility by Non-RPCF.

Date of Government Version: 01/01/1990
Date Data Arrived at EDR: 06/17/2009
Date Made Active in Reports: 07/15/2009
Number of Days to Update: 28

Source: Illinois EPA
Telephone: 217-782-9288
Last EDR Contact: 06/10/2009
Next Scheduled EDR Contact: N/A
Data Release Frequency: No Update Planned

IL NIPC: Solid Waste Landfill Inventory

Solid Waste Landfill Inventory. NIPC is an inventory of active and inactive solid waste disposal sites, based on state, local government and historical archive data. Included are numerous sites which previously had never been identified largely because there was no obligation to register such sites prior to 1971.

Date of Government Version: 08/01/1988
Date Data Arrived at EDR: 08/01/1994
Date Made Active in Reports: 08/12/1994
Number of Days to Update: 11

Source: Northeastern Illinois Planning Commission
Telephone: 312-454-0400
Last EDR Contact: 05/23/2006
Next Scheduled EDR Contact: N/A
Data Release Frequency: No Update Planned

CCDD: Clean Construction or Demolition Debris

Construction and demolition (C and D) debris is nonhazardous, uncontaminated material resulting from construction, remodeling, repair, or demolition of utilities, structures, and roads.

Date of Government Version: 10/27/2014
Date Data Arrived at EDR: 10/28/2014
Date Made Active in Reports: 11/25/2014
Number of Days to Update: 28

Source: Illinois EPA
Telephone: 217-524-3300
Last EDR Contact: 10/28/2014
Next Scheduled EDR Contact: 02/09/2015
Data Release Frequency: Varies

State and tribal leaking storage tank lists

GOVERNMENT RECORDS SEARCHED / DATA CURRENCY TRACKING

LUST: Leaking Underground Storage Tank Sites
Leaking Underground Storage Tank Incident Reports. LUST records contain an inventory of reported leaking underground storage tank incidents. Not all states maintain these records, and the information stored varies by state.

Date of Government Version: 09/25/2014
Date Data Arrived at EDR: 10/28/2014
Date Made Active in Reports: 11/25/2014
Number of Days to Update: 28

Source: Illinois Environmental Protection Agency
Telephone: 217-782-6762
Last EDR Contact: 10/28/2014
Next Scheduled EDR Contact: 02/09/2015
Data Release Frequency: Semi-Annually

LUST TRUST: Underground Storage Tank Fund Payment Priorty List
In case sufficient funds are not available in the Underground Storage Tank Fund, requests for payment are entered on the Payment Priority List by "queue date" order. As required by the Environmental Protection Act, the queue date is the date that a complete request for partial or final payment was received by the Agency. The queue date is "officially" confirmed at the end of the payment review process when a Final Decision Letter is sent to the site owner.

Date of Government Version: 09/26/2014
Date Data Arrived at EDR: 10/28/2014
Date Made Active in Reports: 11/25/2014
Number of Days to Update: 28

Source: Illinois EPA
Telephone: 217-782-6762
Last EDR Contact: 10/28/2014
Next Scheduled EDR Contact: 02/09/2015
Data Release Frequency: Varies

INDIAN LUST R4: Leaking Underground Storage Tanks on Indian Land
LUSTs on Indian land in Florida, Mississippi and North Carolina.

Date of Government Version: 07/30/2014
Date Data Arrived at EDR: 08/12/2014
Date Made Active in Reports: 08/22/2014
Number of Days to Update: 10

Source: EPA Region 4
Telephone: 404-562-8677
Last EDR Contact: 10/27/2014
Next Scheduled EDR Contact: 02/09/2015
Data Release Frequency: Semi-Annually

INDIAN LUST R6: Leaking Underground Storage Tanks on Indian Land
LUSTs on Indian land in New Mexico and Oklahoma.

Date of Government Version: 10/06/2014
Date Data Arrived at EDR: 10/29/2014
Date Made Active in Reports: 11/17/2014
Number of Days to Update: 19

Source: EPA Region 6
Telephone: 214-665-6597
Last EDR Contact: 10/27/2014
Next Scheduled EDR Contact: 02/09/2015
Data Release Frequency: Varies

INDIAN LUST R5: Leaking Underground Storage Tanks on Indian Land
Leaking underground storage tanks located on Indian Land in Michigan, Minnesota and Wisconsin.

Date of Government Version: 11/03/2014
Date Data Arrived at EDR: 11/05/2014
Date Made Active in Reports: 11/17/2014
Number of Days to Update: 12

Source: EPA, Region 5
Telephone: 312-886-7439
Last EDR Contact: 10/27/2014
Next Scheduled EDR Contact: 02/09/2015
Data Release Frequency: Varies

INDIAN LUST R1: Leaking Underground Storage Tanks on Indian Land
A listing of leaking underground storage tank locations on Indian Land.

Date of Government Version: 02/01/2013
Date Data Arrived at EDR: 05/01/2013
Date Made Active in Reports: 11/01/2013
Number of Days to Update: 184

Source: EPA Region 1
Telephone: 617-918-1313
Last EDR Contact: 10/31/2014
Next Scheduled EDR Contact: 02/09/2015
Data Release Frequency: Varies

INDIAN LUST R7: Leaking Underground Storage Tanks on Indian Land
LUSTs on Indian land in Iowa, Kansas, and Nebraska

Date of Government Version: 05/22/2014
Date Data Arrived at EDR: 08/22/2014
Date Made Active in Reports: 09/18/2014
Number of Days to Update: 27

Source: EPA Region 7
Telephone: 913-551-7003
Last EDR Contact: 10/27/2014
Next Scheduled EDR Contact: 02/09/2015
Data Release Frequency: Varies

INDIAN LUST R8: Leaking Underground Storage Tanks on Indian Land
LUSTs on Indian land in Colorado, Montana, North Dakota, South Dakota, Utah and Wyoming.

Date of Government Version: 11/04/2014
Date Data Arrived at EDR: 11/07/2014
Date Made Active in Reports: 11/17/2014
Number of Days to Update: 10

Source: EPA Region 8
Telephone: 303-312-6271
Last EDR Contact: 10/27/2014
Next Scheduled EDR Contact: 02/09/2015
Data Release Frequency: Quarterly

INDIAN LUST R9: Leaking Underground Storage Tanks on Indian Land
LUSTs on Indian land in Arizona, California, New Mexico and Nevada

Date of Government Version: 03/01/2013
Date Data Arrived at EDR: 03/01/2013
Date Made Active in Reports: 04/12/2013
Number of Days to Update: 42

Source: Environmental Protection Agency
Telephone: 415-972-3372
Last EDR Contact: 12/09/2014
Next Scheduled EDR Contact: 02/09/2015
Data Release Frequency: Quarterly

INDIAN LUST R10: Leaking Underground Storage Tanks on Indian Land
LUSTs on Indian land in Alaska, Idaho, Oregon and Washington.

Date of Government Version: 05/20/2014
Date Data Arrived at EDR: 06/10/2014
Date Made Active in Reports: 08/22/2014
Number of Days to Update: 73

Source: EPA Region 10
Telephone: 206-553-2857
Last EDR Contact: 10/27/2014
Next Scheduled EDR Contact: 02/09/2015
Data Release Frequency: Quarterly

State and tribal registered storage tank lists

UST: Underground Storage Tank Facility List
Registered Underground Storage Tanks. UST's are regulated under Subtitle I of the Resource Conservation and Recovery Act (RCRA) and must be registered with the state department responsible for administering the UST program. Available information varies by state program.

Date of Government Version: 10/27/2014
Date Data Arrived at EDR: 10/28/2014
Date Made Active in Reports: 12/18/2014
Number of Days to Update: 51

Source: Illinois State Fire Marshal
Telephone: 217-785-0969
Last EDR Contact: 10/29/2014
Next Scheduled EDR Contact: 02/09/2015
Data Release Frequency: Quarterly

AST: Above Ground Storage Tanks
Listing of all aboveground tanks inspected by Office of State Fire Marshal.

Date of Government Version: 11/24/2014
Date Data Arrived at EDR: 12/01/2014
Date Made Active in Reports: 12/09/2014
Number of Days to Update: 8

Source: State Fire Marshal
Telephone: 217-785-1011
Last EDR Contact: 11/21/2014
Next Scheduled EDR Contact: 03/09/2015
Data Release Frequency: Varies

INDIAN UST R9: Underground Storage Tanks on Indian Land
The Indian Underground Storage Tank (UST) database provides information about underground storage tanks on Indian land in EPA Region 9 (Arizona, California, Hawaii, Nevada, the Pacific Islands, and Tribal Nations).

Date of Government Version: 08/14/2014
Date Data Arrived at EDR: 08/15/2014
Date Made Active in Reports: 08/22/2014
Number of Days to Update: 7

Source: EPA Region 9
Telephone: 415-972-3368
Last EDR Contact: 10/27/2014
Next Scheduled EDR Contact: 02/09/2015
Data Release Frequency: Quarterly

INDIAN UST R8: Underground Storage Tanks on Indian Land

The Indian Underground Storage Tank (UST) database provides information about underground storage tanks on Indian land in EPA Region 8 (Colorado, Montana, North Dakota, South Dakota, Utah, Wyoming and 27 Tribal Nations).

Date of Government Version: 11/04/2014
Date Data Arrived at EDR: 11/07/2014
Date Made Active in Reports: 11/17/2014
Number of Days to Update: 10

Source: EPA Region 8
Telephone: 303-312-6137
Last EDR Contact: 10/27/2014
Next Scheduled EDR Contact: 02/09/2015
Data Release Frequency: Quarterly

INDIAN UST R7: Underground Storage Tanks on Indian Land

The Indian Underground Storage Tank (UST) database provides information about underground storage tanks on Indian land in EPA Region 7 (Iowa, Kansas, Missouri, Nebraska, and 9 Tribal Nations).

Date of Government Version: 08/20/2014
Date Data Arrived at EDR: 08/22/2014
Date Made Active in Reports: 09/18/2014
Number of Days to Update: 27

Source: EPA Region 7
Telephone: 913-551-7003
Last EDR Contact: 10/27/2014
Next Scheduled EDR Contact: 02/09/2015
Data Release Frequency: Varies

INDIAN UST R1: Underground Storage Tanks on Indian Land

The Indian Underground Storage Tank (UST) database provides information about underground storage tanks on Indian land in EPA Region 1 (Connecticut, Maine, Massachusetts, New Hampshire, Rhode Island, Vermont and ten Tribal Nations).

Date of Government Version: 02/01/2013
Date Data Arrived at EDR: 05/01/2013
Date Made Active in Reports: 01/27/2014
Number of Days to Update: 271

Source: EPA, Region 1
Telephone: 617-918-1313
Last EDR Contact: 10/31/2014
Next Scheduled EDR Contact: 02/09/2015
Data Release Frequency: Varies

INDIAN UST R6: Underground Storage Tanks on Indian Land

The Indian Underground Storage Tank (UST) database provides information about underground storage tanks on Indian land in EPA Region 6 (Louisiana, Arkansas, Oklahoma, New Mexico, Texas and 65 Tribes).

Date of Government Version: 10/06/2014
Date Data Arrived at EDR: 10/29/2014
Date Made Active in Reports: 11/06/2014
Number of Days to Update: 8

Source: EPA Region 6
Telephone: 214-665-7591
Last EDR Contact: 10/27/2014
Next Scheduled EDR Contact: 02/09/2015
Data Release Frequency: Semi-Annually

INDIAN UST R5: Underground Storage Tanks on Indian Land

The Indian Underground Storage Tank (UST) database provides information about underground storage tanks on Indian land in EPA Region 5 (Michigan, Minnesota and Wisconsin and Tribal Nations).

Date of Government Version: 11/03/2014
Date Data Arrived at EDR: 11/05/2014
Date Made Active in Reports: 11/17/2014
Number of Days to Update: 12

Source: EPA Region 5
Telephone: 312-886-6136
Last EDR Contact: 10/27/2014
Next Scheduled EDR Contact: 02/09/2015
Data Release Frequency: Varies

INDIAN UST R4: Underground Storage Tanks on Indian Land

The Indian Underground Storage Tank (UST) database provides information about underground storage tanks on Indian land in EPA Region 4 (Alabama, Florida, Georgia, Kentucky, Mississippi, North Carolina, South Carolina, Tennessee and Tribal Nations)

Date of Government Version: 07/30/2014
Date Data Arrived at EDR: 08/12/2014
Date Made Active in Reports: 08/22/2014
Number of Days to Update: 10

Source: EPA Region 4
Telephone: 404-562-9424
Last EDR Contact: 10/27/2014
Next Scheduled EDR Contact: 02/09/2015
Data Release Frequency: Semi-Annually

INDIAN UST R10: Underground Storage Tanks on Indian Land

The Indian Underground Storage Tank (UST) database provides information about underground storage tanks on Indian land in EPA Region 10 (Alaska, Idaho, Oregon, Washington, and Tribal Nations).

Date of Government Version: 05/20/2014
Date Data Arrived at EDR: 06/10/2014
Date Made Active in Reports: 08/15/2014
Number of Days to Update: 66

Source: EPA Region 10
Telephone: 206-553-2857
Last EDR Contact: 10/27/2014
Next Scheduled EDR Contact: 02/09/2015
Data Release Frequency: Quarterly

FEMA UST: Underground Storage Tank Listing

A listing of all FEMA owned underground storage tanks.

Date of Government Version: 01/01/2010
Date Data Arrived at EDR: 02/16/2010
Date Made Active in Reports: 04/12/2010
Number of Days to Update: 55

Source: FEMA
Telephone: 202-646-5797
Last EDR Contact: 01/12/2015
Next Scheduled EDR Contact: 04/27/2015
Data Release Frequency: Varies

State and tribal institutional control / engineering control registries

ENG CONTROLS: Sites with Engineering Controls

Sites using of engineered barriers (e.g., asphalt or concrete paving).

Date of Government Version: 08/29/2014
Date Data Arrived at EDR: 10/08/2014
Date Made Active in Reports: 11/25/2014
Number of Days to Update: 48

Source: Illinois Environmental Protection Agency
Telephone: 217-782-6761
Last EDR Contact: 01/07/2015
Next Scheduled EDR Contact: 04/20/2015
Data Release Frequency: Quarterly

Inst Control: Institutional Controls

Legal or administrative restrictions on land use and/or other activities (e.g., groundwater use restrictions) which effectively limit exposure to contamination may be employed as alternatives to removal or treatment of contamination.

Date of Government Version: 08/29/2014
Date Data Arrived at EDR: 10/08/2014
Date Made Active in Reports: 11/25/2014
Number of Days to Update: 48

Source: Illinois Environmental Protection Agency
Telephone: 217-782-6761
Last EDR Contact: 01/07/2015
Next Scheduled EDR Contact: 04/20/2015
Data Release Frequency: Quarterly

State and tribal voluntary cleanup sites

INDIAN VCP R1: Voluntary Cleanup Priority Listing

A listing of voluntary cleanup priority sites located on Indian Land located in Region 1.

Date of Government Version: 09/29/2014
Date Data Arrived at EDR: 10/01/2014
Date Made Active in Reports: 11/06/2014
Number of Days to Update: 36

Source: EPA, Region 1
Telephone: 617-918-1102
Last EDR Contact: 12/31/2014
Next Scheduled EDR Contact: 04/13/2015
Data Release Frequency: Varies

INDIAN VCP R7: Voluntary Cleanup Priority Lisitng

A listing of voluntary cleanup priority sites located on Indian Land located in Region 7.

Date of Government Version: 03/20/2008
Date Data Arrived at EDR: 04/22/2008
Date Made Active in Reports: 05/19/2008
Number of Days to Update: 27

Source: EPA, Region 7
Telephone: 913-551-7365
Last EDR Contact: 04/20/2009
Next Scheduled EDR Contact: 07/20/2009
Data Release Frequency: Varies

SRP: Site Remediation Program Database

The database identifies the status of all voluntary remediation projects administered through the pre-notice site cleanup program (1989 to 1995) and the site remediation program (1996 to the present).

Date of Government Version: 08/29/2014
Date Data Arrived at EDR: 10/08/2014
Date Made Active in Reports: 11/25/2014
Number of Days to Update: 48

Source: Illinois Environmental Protection Agency
Telephone: 217-785-9407
Last EDR Contact: 01/07/2015
Next Scheduled EDR Contact: 04/20/2015
Data Release Frequency: Semi-Annually

State and tribal Brownfields sites

BROWNFIELDS: Municipal Brownfields Redevelopment Grant Program Project Descriptions

The Illinois Municipal Brownfields Redevelopment Grant Program (MBRGP) offers grants worth a maximum of $240,000 each to municipalities to assist in site investigation activities, development of cleanup objectives, and performance of cleanup activities. Brownfields are abandoned or underused industrial and/or commercial properties that are contaminated (or thought to be contaminated) and have an active potential for redevelopment.

Date of Government Version: 02/11/2010
Date Data Arrived at EDR: 07/31/2014
Date Made Active in Reports: 09/08/2014
Number of Days to Update: 39

Source: Illinois Environmental Protection Agency
Telephone: 217-785-3486
Last EDR Contact: 10/27/2014
Next Scheduled EDR Contact: 02/09/2015
Data Release Frequency: Varies

BROWNFIELDS: Redevelopment Assessment Database

The Office of Site Evaluations Redevelopment Assessment database identifies the status of all properties within the State in which the Illinois EPA's Office of Site Evaluation has conducted a municipal Brownfield Redevelopment Assessment.

Date of Government Version: 10/27/2014
Date Data Arrived at EDR: 10/28/2014
Date Made Active in Reports: 11/25/2014
Number of Days to Update: 28

Source: Illinois Environmental Protection Agency
Telephone: 217-524-1658
Last EDR Contact: 10/28/2014
Next Scheduled EDR Contact: 02/09/2015
Data Release Frequency: Varies

ADDITIONAL ENVIRONMENTAL RECORDS

Local Brownfield lists

US BROWNFIELDS: A Listing of Brownfields Sites

Brownfields are real property, the expansion, redevelopment, or reuse of which may be complicated by the presence or potential presence of a hazardous substance, pollutant, or contaminant. Cleaning up and reinvesting in these properties takes development pressures off of undeveloped, open land, and both improves and protects the environment. Assessment, Cleanup and Redevelopment Exchange System (ACRES) stores information reported by EPA Brownfields grant recipients on brownfields properties assessed or cleaned up with grant funding as well as information on Targeted Brownfields Assessments performed by EPA Regions. A listing of ACRES Brownfield sites is obtained from Cleanups in My Community. Cleanups in My Community provides information on Brownfields properties for which information is reported back to EPA, as well as areas served by Brownfields grant programs.

Date of Government Version: 09/22/2014
Date Data Arrived at EDR: 09/23/2014
Date Made Active in Reports: 10/20/2014
Number of Days to Update: 27

Source: Environmental Protection Agency
Telephone: 202-566-2777
Last EDR Contact: 12/22/2014
Next Scheduled EDR Contact: 04/06/2015
Data Release Frequency: Semi-Annually

GOVERNMENT RECORDS SEARCHED / DATA CURRENCY TRACKING

Local Lists of Landfill / Solid Waste Disposal Sites

DEBRIS REGION 9: Torres Martinez Reservation Illegal Dump Site Locations
A listing of illegal dump sites location on the Torres Martinez Indian Reservation located in eastern Riverside County and northern Imperial County, California.

Date of Government Version: 01/12/2009
Date Data Arrived at EDR: 05/07/2009
Date Made Active in Reports: 09/21/2009
Number of Days to Update: 137

Source: EPA, Region 9
Telephone: 415-947-4219
Last EDR Contact: 10/24/2014
Next Scheduled EDR Contact: 02/09/2015
Data Release Frequency: No Update Planned

ODI: Open Dump Inventory
An open dump is defined as a disposal facility that does not comply with one or more of the Part 257 or Part 258 Subtitle D Criteria.

Date of Government Version: 06/30/1985
Date Data Arrived at EDR: 08/09/2004
Date Made Active in Reports: 09/17/2004
Number of Days to Update: 39

Source: Environmental Protection Agency
Telephone: 800-424-9346
Last EDR Contact: 06/09/2004
Next Scheduled EDR Contact: N/A
Data Release Frequency: No Update Planned

INDIAN ODI: Report on the Status of Open Dumps on Indian Lands
Location of open dumps on Indian land.

Date of Government Version: 12/31/1998
Date Data Arrived at EDR: 12/03/2007
Date Made Active in Reports: 01/24/2008
Number of Days to Update: 52

Source: Environmental Protection Agency
Telephone: 703-308-8245
Last EDR Contact: 10/29/2014
Next Scheduled EDR Contact: 02/16/2015
Data Release Frequency: Varies

Local Lists of Hazardous waste / Contaminated Sites

US CDL: Clandestine Drug Labs
A listing of clandestine drug lab locations. The U.S. Department of Justice ("the Department") provides this web site as a public service. It contains addresses of some locations where law enforcement agencies reported they found chemicals or other items that indicated the presence of either clandestine drug laboratories or dumpsites. In most cases, the source of the entries is not the Department, and the Department has not verified the entry and does not guarantee its accuracy. Members of the public must verify the accuracy of all entries by, for example, contacting local law enforcement and local health departments.

Date of Government Version: 07/25/2014
Date Data Arrived at EDR: 09/09/2014
Date Made Active in Reports: 10/20/2014
Number of Days to Update: 41

Source: Drug Enforcement Administration
Telephone: 202-307-1000
Last EDR Contact: 11/25/2014
Next Scheduled EDR Contact: 03/16/2015
Data Release Frequency: Quarterly

CDL: Meth Drug Lab Site Listing
A listing of clandestine/meth drug lab locations.

Date of Government Version: 10/15/2014
Date Data Arrived at EDR: 10/17/2014
Date Made Active in Reports: 11/25/2014
Number of Days to Update: 39

Source: Department of Public Health
Telephone: 217-782-5750
Last EDR Contact: 01/12/2015
Next Scheduled EDR Contact: 04/27/2015
Data Release Frequency: Varies

US HIST CDL: National Clandestine Laboratory Register
A listing of clandestine drug lab locations. The U.S. Department of Justice ("the Department") provides this web site as a public service. It contains addresses of some locations where law enforcement agencies reported they found chemicals or other items that indicated the presence of either clandestine drug laboratories or dumpsites. In most cases, the source of the entries is not the Department, and the Department has not verified the entry and does not guarantee its accuracy. Members of the public must verify the accuracy of all entries by, for example, contacting local law enforcement and local health departments.

Date of Government Version: 07/25/2014
Date Data Arrived at EDR: 09/09/2014
Date Made Active in Reports: 10/20/2014
Number of Days to Update: 41

Source: Drug Enforcement Administration
Telephone: 202-307-1000
Last EDR Contact: 11/25/2014
Next Scheduled EDR Contact: 03/16/2015
Data Release Frequency: No Update Planned

Local Land Records

LIENS 2: CERCLA Lien Information

A Federal CERCLA ('Superfund') lien can exist by operation of law at any site or property at which EPA has spent Superfund monies. These monies are spent to investigate and address releases and threatened releases of contamination. CERCLIS provides information as to the identity of these sites and properties.

Date of Government Version: 02/18/2014
Date Data Arrived at EDR: 03/18/2014
Date Made Active in Reports: 04/24/2014
Number of Days to Update: 37

Source: Environmental Protection Agency
Telephone: 202-564-6023
Last EDR Contact: 10/27/2014
Next Scheduled EDR Contact: 02/09/2015
Data Release Frequency: Varies

Records of Emergency Release Reports

HMIRS: Hazardous Materials Information Reporting System

Hazardous Materials Incident Report System. HMIRS contains hazardous material spill incidents reported to DOT.

Date of Government Version: 09/30/2014
Date Data Arrived at EDR: 10/01/2014
Date Made Active in Reports: 11/06/2014
Number of Days to Update: 36

Source: U.S. Department of Transportation
Telephone: 202-366-4555
Last EDR Contact: 12/30/2014
Next Scheduled EDR Contact: 04/13/2015
Data Release Frequency: Annually

IEMA SPILLS: Illinois Emergency Management Agency Spills

A listing of hazardous materials incidents reported to the Illinois Emergency Management Agency.

Date of Government Version: 11/03/2014
Date Data Arrived at EDR: 11/05/2014
Date Made Active in Reports: 11/25/2014
Number of Days to Update: 20

Source: Illinois Emergency Management Agency
Telephone: 217-524-0770
Last EDR Contact: 11/05/2014
Next Scheduled EDR Contact: 02/16/2015
Data Release Frequency: Quarterly

SPILLS: State spills

A listing of incidents reported to the Office of Emergency Response.

Date of Government Version: 11/18/2014
Date Data Arrived at EDR: 11/21/2014
Date Made Active in Reports: 12/09/2014
Number of Days to Update: 18

Source: Illinois EPA
Telephone: 217-782-3637
Last EDR Contact: 01/09/2015
Next Scheduled EDR Contact: 04/27/2015
Data Release Frequency: Varies

SPILLS 90: SPILLS90 data from FirstSearch

Spills 90 includes those spill and release records available exclusively from FirstSearch databases. Typically, they may include chemical, oil and/or hazardous substance spills recorded after 1990. Duplicate records that are already included in EDR incident and release records are not included in Spills 90.

Date of Government Version: 07/18/2012
Date Data Arrived at EDR: 01/03/2013
Date Made Active in Reports: 03/15/2013
Number of Days to Update: 71

Source: FirstSearch
Telephone: N/A
Last EDR Contact: 01/03/2013
Next Scheduled EDR Contact: N/A
Data Release Frequency: No Update Planned

Other Ascertainable Records

GOVERNMENT RECORDS SEARCHED / DATA CURRENCY TRACKING

RCRA NonGen / NLR: RCRA - Non Generators

RCRAInfo is EPA's comprehensive information system, providing access to data supporting the Resource Conservation and Recovery Act (RCRA) of 1976 and the Hazardous and Solid Waste Amendments (HSWA) of 1984. The database includes selective information on sites which generate, transport, store, treat and/or dispose of hazardous waste as defined by the Resource Conservation and Recovery Act (RCRA). Non-Generators do not presently generate hazardous waste.

Date of Government Version: 06/10/2014
Date Data Arrived at EDR: 07/02/2014
Date Made Active in Reports: 09/18/2014
Number of Days to Update: 78

Source: Environmental Protection Agency
Telephone: 312-886-6186
Last EDR Contact: 12/29/2014
Next Scheduled EDR Contact: 04/13/2015
Data Release Frequency: Varies

DOT OPS: Incident and Accident Data

Department of Transporation, Office of Pipeline Safety Incident and Accident data.

Date of Government Version: 07/31/2012
Date Data Arrived at EDR: 08/07/2012
Date Made Active in Reports: 09/18/2012
Number of Days to Update: 42

Source: Department of Transporation, Office of Pipeline Safety
Telephone: 202-366-4595
Last EDR Contact: 11/04/2014
Next Scheduled EDR Contact: 02/16/2015
Data Release Frequency: Varies

DOD: Department of Defense Sites

This data set consists of federally owned or administered lands, administered by the Department of Defense, that have any area equal to or greater than 640 acres of the United States, Puerto Rico, and the U.S. Virgin Islands.

Date of Government Version: 12/31/2005
Date Data Arrived at EDR: 11/10/2006
Date Made Active in Reports: 01/11/2007
Number of Days to Update: 62

Source: USGS
Telephone: 888-275-8747
Last EDR Contact: 11/07/2014
Next Scheduled EDR Contact: 01/26/2015
Data Release Frequency: Semi-Annually

FUDS: Formerly Used Defense Sites

The listing includes locations of Formerly Used Defense Sites properties where the US Army Corps of Engineers is actively working or will take necessary cleanup actions.

Date of Government Version: 06/06/2014
Date Data Arrived at EDR: 09/10/2014
Date Made Active in Reports: 09/18/2014
Number of Days to Update: 8

Source: U.S. Army Corps of Engineers
Telephone: 202-528-4285
Last EDR Contact: 12/12/2014
Next Scheduled EDR Contact: 03/23/2015
Data Release Frequency: Varies

CONSENT: Superfund (CERCLA) Consent Decrees

Major legal settlements that establish responsibility and standards for cleanup at NPL (Superfund) sites. Released periodically by United States District Courts after settlement by parties to litigation matters.

Date of Government Version: 12/31/2013
Date Data Arrived at EDR: 01/24/2014
Date Made Active in Reports: 02/24/2014
Number of Days to Update: 31

Source: Department of Justice, Consent Decree Library
Telephone: Varies
Last EDR Contact: 12/24/2014
Next Scheduled EDR Contact: 04/13/2015
Data Release Frequency: Varies

ROD: Records Of Decision

Record of Decision. ROD documents mandate a permanent remedy at an NPL (Superfund) site containing technical and health information to aid in the cleanup.

Date of Government Version: 11/25/2013
Date Data Arrived at EDR: 12/12/2013
Date Made Active in Reports: 02/24/2014
Number of Days to Update: 74

Source: EPA
Telephone: 703-416-0223
Last EDR Contact: 12/12/2014
Next Scheduled EDR Contact: 03/23/2015
Data Release Frequency: Annually

UMTRA: Uranium Mill Tailings Sites

Uranium ore was mined by private companies for federal government use in national defense programs. When the mills shut down, large piles of the sand-like material (mill tailings) remain after uranium has been extracted from the ore. Levels of human exposure to radioactive materials from the piles are low; however, in some cases tailings were used as construction materials before the potential health hazards of the tailings were recognized.

Date of Government Version: 09/14/2010
Date Data Arrived at EDR: 10/07/2011
Date Made Active in Reports: 03/01/2012
Number of Days to Update: 146

Source: Department of Energy
Telephone: 505-845-0011
Last EDR Contact: 11/26/2014
Next Scheduled EDR Contact: 03/09/2015
Data Release Frequency: Varies

US MINES: Mines Master Index File

Contains all mine identification numbers issued for mines active or opened since 1971. The data also includes violation information.

Date of Government Version: 08/05/2014
Date Data Arrived at EDR: 09/04/2014
Date Made Active in Reports: 11/17/2014
Number of Days to Update: 74

Source: Department of Labor, Mine Safety and Health Administration
Telephone: 303-231-5959
Last EDR Contact: 12/30/2014
Next Scheduled EDR Contact: 03/16/2015
Data Release Frequency: Semi-Annually

TRIS: Toxic Chemical Release Inventory System

Toxic Release Inventory System. TRIS identifies facilities which release toxic chemicals to the air, water and land in reportable quantities under SARA Title III Section 313.

Date of Government Version: 12/31/2011
Date Data Arrived at EDR: 07/31/2013
Date Made Active in Reports: 09/13/2013
Number of Days to Update: 44

Source: EPA
Telephone: 202-566-0250
Last EDR Contact: 11/26/2014
Next Scheduled EDR Contact: 03/09/2015
Data Release Frequency: Annually

TSCA: Toxic Substances Control Act

Toxic Substances Control Act. TSCA identifies manufacturers and importers of chemical substances included on the TSCA Chemical Substance Inventory list. It includes data on the production volume of these substances by plant site.

Date of Government Version: 12/31/2006
Date Data Arrived at EDR: 09/29/2010
Date Made Active in Reports: 12/02/2010
Number of Days to Update: 64

Source: EPA
Telephone: 202-260-5521
Last EDR Contact: 12/22/2014
Next Scheduled EDR Contact: 04/06/2015
Data Release Frequency: Every 4 Years

FTTS: FIFRA/ TSCA Tracking System - FIFRA (Federal Insecticide, Fungicide, & Rodenticide Act)/TSCA (Toxic Substances Control Act)

FTTS tracks administrative cases and pesticide enforcement actions and compliance activities related to FIFRA, TSCA and EPCRA (Emergency Planning and Community Right-to-Know Act). To maintain currency, EDR contacts the Agency on a quarterly basis.

Date of Government Version: 04/09/2009
Date Data Arrived at EDR: 04/16/2009
Date Made Active in Reports: 05/11/2009
Number of Days to Update: 25

Source: EPA/Office of Prevention, Pesticides and Toxic Substances
Telephone: 202-566-1667
Last EDR Contact: 11/19/2014
Next Scheduled EDR Contact: 03/09/2015
Data Release Frequency: Quarterly

FTTS INSP: FIFRA/ TSCA Tracking System - FIFRA (Federal Insecticide, Fungicide, & Rodenticide Act)/TSCA (Toxic Substances Control Act)

A listing of FIFRA/TSCA Tracking System (FTTS) inspections and enforcements.

Date of Government Version: 04/09/2009
Date Data Arrived at EDR: 04/16/2009
Date Made Active in Reports: 05/11/2009
Number of Days to Update: 25

Source: EPA
Telephone: 202-566-1667
Last EDR Contact: 11/19/2014
Next Scheduled EDR Contact: 03/09/2015
Data Release Frequency: Quarterly

GOVERNMENT RECORDS SEARCHED / DATA CURRENCY TRACKING

HIST FTTS: FIFRA/TSCA Tracking System Administrative Case Listing

A complete administrative case listing from the FIFRA/TSCA Tracking System (FTTS) for all ten EPA regions. The information was obtained from the National Compliance Database (NCDB). NCDB supports the implementation of FIFRA (Federal Insecticide, Fungicide, and Rodenticide Act) and TSCA (Toxic Substances Control Act). Some EPA regions are now closing out records. Because of that, and the fact that some EPA regions are not providing EPA Headquarters with updated records, it was decided to create a HIST FTTS database. It included records that may not be included in the newer FTTS database updates. This database is no longer updated.

Date of Government Version: 10/19/2006
Date Data Arrived at EDR: 03/01/2007
Date Made Active in Reports: 04/10/2007
Number of Days to Update: 40

Source: Environmental Protection Agency
Telephone: 202-564-2501
Last EDR Contact: 12/17/2007
Next Scheduled EDR Contact: 03/17/2008
Data Release Frequency: No Update Planned

HIST FTTS INSP: FIFRA/TSCA Tracking System Inspection & Enforcement Case Listing

A complete inspection and enforcement case listing from the FIFRA/TSCA Tracking System (FTTS) for all ten EPA regions. The information was obtained from the National Compliance Database (NCDB). NCDB supports the implementation of FIFRA (Federal Insecticide, Fungicide, and Rodenticide Act) and TSCA (Toxic Substances Control Act). Some EPA regions are now closing out records. Because of that, and the fact that some EPA regions are not providing EPA Headquarters with updated records, it was decided to create a HIST FTTS database. It included records that may not be included in the newer FTTS database updates. This database is no longer updated.

Date of Government Version: 10/19/2006
Date Data Arrived at EDR: 03/01/2007
Date Made Active in Reports: 04/10/2007
Number of Days to Update: 40

Source: Environmental Protection Agency
Telephone: 202-564-2501
Last EDR Contact: 12/17/2008
Next Scheduled EDR Contact: 03/17/2008
Data Release Frequency: No Update Planned

SSTS: Section 7 Tracking Systems

Section 7 of the Federal Insecticide, Fungicide and Rodenticide Act, as amended (92 Stat. 829) requires all registered pesticide-producing establishments to submit a report to the Environmental Protection Agency by March 1st each year. Each establishment must report the types and amounts of pesticides, active ingredients and devices being produced, and those having been produced and sold or distributed in the past year.

Date of Government Version: 12/31/2009
Date Data Arrived at EDR: 12/10/2010
Date Made Active in Reports: 02/25/2011
Number of Days to Update: 77

Source: EPA
Telephone: 202-564-4203
Last EDR Contact: 10/27/2014
Next Scheduled EDR Contact: 02/09/2015
Data Release Frequency: Annually

ICIS: Integrated Compliance Information System

The Integrated Compliance Information System (ICIS) supports the information needs of the national enforcement and compliance program as well as the unique needs of the National Pollutant Discharge Elimination System (NPDES) program.

Date of Government Version: 07/31/2014
Date Data Arrived at EDR: 10/29/2014
Date Made Active in Reports: 11/06/2014
Number of Days to Update: 8

Source: Environmental Protection Agency
Telephone: 202-564-5088
Last EDR Contact: 01/09/2015
Next Scheduled EDR Contact: 04/27/2015
Data Release Frequency: Quarterly

PADS: PCB Activity Database System

PCB Activity Database. PADS Identifies generators, transporters, commercial storers and/or brokers and disposers of PCB's who are required to notify the EPA of such activities.

Date of Government Version: 07/01/2014
Date Data Arrived at EDR: 10/15/2014
Date Made Active in Reports: 11/17/2014
Number of Days to Update: 33

Source: EPA
Telephone: 202-566-0500
Last EDR Contact: 10/15/2014
Next Scheduled EDR Contact: 01/26/2015
Data Release Frequency: Annually

GOVERNMENT RECORDS SEARCHED / DATA CURRENCY TRACKING

MLTS: Material Licensing Tracking System

MLTS is maintained by the Nuclear Regulatory Commission and contains a list of approximately 8,100 sites which possess or use radioactive materials and which are subject to NRC licensing requirements. To maintain currency, EDR contacts the Agency on a quarterly basis.

Date of Government Version: 07/22/2013
Date Data Arrived at EDR: 08/02/2013
Date Made Active in Reports: 11/01/2013
Number of Days to Update: 91

Source: Nuclear Regulatory Commission
Telephone: 301-415-7169
Last EDR Contact: 12/04/2014
Next Scheduled EDR Contact: 03/23/2015
Data Release Frequency: Quarterly

RADINFO: Radiation Information Database

The Radiation Information Database (RADINFO) contains information about facilities that are regulated by U.S. Environmental Protection Agency (EPA) regulations for radiation and radioactivity.

Date of Government Version: 10/07/2014
Date Data Arrived at EDR: 10/08/2014
Date Made Active in Reports: 10/20/2014
Number of Days to Update: 12

Source: Environmental Protection Agency
Telephone: 202-343-9775
Last EDR Contact: 01/08/2015
Next Scheduled EDR Contact: 04/20/2015
Data Release Frequency: Quarterly

FINDS: Facility Index System/Facility Registry System

Facility Index System. FINDS contains both facility information and 'pointers' to other sources that contain more detail. EDR includes the following FINDS databases in this report: PCS (Permit Compliance System), AIRS (Aerometric Information Retrieval System), DOCKET (Enforcement Docket used to manage and track information on civil judicial enforcement cases for all environmental statutes), FURS (Federal Underground Injection Control), C-DOCKET (Criminal Docket System used to track criminal enforcement actions for all environmental statutes), FFIS (Federal Facilities Information System), STATE (State Environmental Laws and Statutes), and PADS (PCB Activity Data System).

Date of Government Version: 08/16/2014
Date Data Arrived at EDR: 09/10/2014
Date Made Active in Reports: 10/20/2014
Number of Days to Update: 40

Source: EPA
Telephone: (312) 353-2000
Last EDR Contact: 12/09/2014
Next Scheduled EDR Contact: 03/23/2015
Data Release Frequency: Quarterly

RAATS: RCRA Administrative Action Tracking System

RCRA Administration Action Tracking System. RAATS contains records based on enforcement actions issued under RCRA pertaining to major violators and includes administrative and civil actions brought by the EPA. For administration actions after September 30, 1995, data entry in the RAATS database was discontinued. EPA will retain a copy of the database for historical records. It was necessary to terminate RAATS because a decrease in agency resources made it impossible to continue to update the information contained in the database.

Date of Government Version: 04/17/1995
Date Data Arrived at EDR: 07/03/1995
Date Made Active in Reports: 08/07/1995
Number of Days to Update: 35

Source: EPA
Telephone: 202-564-4104
Last EDR Contact: 06/02/2008
Next Scheduled EDR Contact: 09/01/2008
Data Release Frequency: No Update Planned

RMP: Risk Management Plans

When Congress passed the Clean Air Act Amendments of 1990, it required EPA to publish regulations and guidance for chemical accident prevention at facilities using extremely hazardous substances. The Risk Management Program Rule (RMP Rule) was written to implement Section 112(r) of these amendments. The rule, which built upon existing industry codes and standards, requires companies of all sizes that use certain flammable and toxic substances to develop a Risk Management Program, which includes a(n): Hazard assessment that details the potential effects of an accidental release, an accident history of the last five years, and an evaluation of worst-case and alternative accidental releases; Prevention program that includes safety precautions and maintenance, monitoring, and employee training measures; and Emergency response program that spells out emergency health care, employee training measures and procedures for informing the public and response agencies (e.g the fire department) should an accident occur.

Date of Government Version: 08/01/2014
Date Data Arrived at EDR: 08/12/2014
Date Made Active in Reports: 11/06/2014
Number of Days to Update: 86

Source: Environmental Protection Agency
Telephone: 202-564-8600
Last EDR Contact: 10/27/2014
Next Scheduled EDR Contact: 02/09/2015
Data Release Frequency: Varies

BRS: Biennial Reporting System

The Biennial Reporting System is a national system administered by the EPA that collects data on the generation and management of hazardous waste. BRS captures detailed data from two groups: Large Quantity Generators (LQG) and Treatment, Storage, and Disposal Facilities.

Date of Government Version: 12/31/2011
Date Data Arrived at EDR: 02/26/2013
Date Made Active in Reports: 04/19/2013
Number of Days to Update: 52

Source: EPA/NTIS
Telephone: 800-424-9346
Last EDR Contact: 11/26/2014
Next Scheduled EDR Contact: 03/09/2015
Data Release Frequency: Biennially

NPDES: A Listing of Active Permits

A listing of facilities currently active in the state. The types of permits are public, private, federal and state.

Date of Government Version: 04/16/2014
Date Data Arrived at EDR: 04/18/2014
Date Made Active in Reports: 05/20/2014
Number of Days to Update: 32

Source: Illinois EPA
Telephone: 217-782-0610
Last EDR Contact: 01/05/2015
Next Scheduled EDR Contact: 04/20/2015
Data Release Frequency: Varies

UIC: Underground Injection Wells

Injection wells are used for disposal of fluids by "injection" into the subsurface. The construction of injection wells range from very technical designs with twenty-four hour monitoring to simply a hole dug in the ground to control runoff. As a result of this diversity, the UIC Program divides injection wells into five different classes.

Date of Government Version: 08/14/2014
Date Data Arrived at EDR: 09/24/2014
Date Made Active in Reports: 11/25/2014
Number of Days to Update: 62

Source: Illinois EPA
Telephone: 217-782-9878
Last EDR Contact: 11/20/2014
Next Scheduled EDR Contact: 03/09/2015
Data Release Frequency: Varies

HWAR: Hazard Waste Annual Report

Each year, Illinois hazardous-waste generators tell the Illinois EPA the amounts and kinds of hazardous waste they produced during the previous year. Generators indicate by code the types of wastes produced and the steps they took to manage these wastes. If some or all of these wastes were sent to commercial treatment, storage, and disposal facilities (TSDFs), that information and the identity of each receiving facility also are submitted. Illinois TSDFs likewise report the types and quantities of wastes received from in-state and out-of-state generators; they also report the procedures they used to manage these wastes.

Date of Government Version: 12/31/2012
Date Data Arrived at EDR: 08/14/2014
Date Made Active in Reports: 09/11/2014
Number of Days to Update: 28

Source: Illinois EPA
Telephone: 217-524-3300
Last EDR Contact: 01/06/2015
Next Scheduled EDR Contact: 04/27/2015
Data Release Frequency: Annually

GOVERNMENT RECORDS SEARCHED / DATA CURRENCY TRACKING

DRYCLEANERS: Illinois Licensed Drycleaners

Any retail drycleaning facility in Illinois must apply for a license through the Illinois Drycleaner Environmental Response Trust Fund. Drycleaner Environmental Response Trust Fund of Illinois.

Date of Government Version: 11/23/2014
Date Data Arrived at EDR: 11/25/2014
Date Made Active in Reports: 12/09/2014
Number of Days to Update: 14

Source: Drycleaner Environmental Response Trust Fund of Illinois
Telephone: 800-765-4041
Last EDR Contact: 11/25/2014
Next Scheduled EDR Contact: 03/09/2015
Data Release Frequency: Varies

IMPDMENT: Surface Impoundment Inventory

Statewide inventory of industrial, municipal, mining, oil & gas , and large agricultural impoundment. This study was conducted by the Illinois EPA to assess potentail for contamination of shallow aquifers. This was a one-time study. Although many of the impoundments may no longer be present, the sites may be contaminated.

Date of Government Version: 12/31/1980
Date Data Arrived at EDR: 03/08/2002
Date Made Active in Reports: 06/03/2002
Number of Days to Update: 87

Source: Illinois Waste Management & Research Center
Telephone: 217-333-8940
Last EDR Contact: 02/20/2002
Next Scheduled EDR Contact: N/A
Data Release Frequency: No Update Planned

AIRS: Air Inventory Listing

A listing of air permits and emissions information.

Date of Government Version: 12/31/2013
Date Data Arrived at EDR: 04/18/2014
Date Made Active in Reports: 05/13/2014
Number of Days to Update: 25

Source: Illinois EPA
Telephone: 217-557-0314
Last EDR Contact: 01/05/2015
Next Scheduled EDR Contact: 04/20/2015
Data Release Frequency: Varies

TIER 2: Tier 2 Information Listing

A listing of facilities which store or manufacture hazardous materials and submit a chemical inventory report.

Date of Government Version: 12/31/2013
Date Data Arrived at EDR: 08/19/2014
Date Made Active in Reports: 09/11/2014
Number of Days to Update: 23

Source: Illinois Emergency Management Agency
Telephone: 217-785-9860
Last EDR Contact: 11/17/2014
Next Scheduled EDR Contact: 03/02/2015
Data Release Frequency: Annually

INDIAN RESERV: Indian Reservations

This map layer portrays Indian administered lands of the United States that have any area equal to or greater than 640 acres.

Date of Government Version: 12/31/2005
Date Data Arrived at EDR: 12/08/2006
Date Made Active in Reports: 01/11/2007
Number of Days to Update: 34

Source: USGS
Telephone: 202-208-3710
Last EDR Contact: 11/07/2014
Next Scheduled EDR Contact: 01/26/2015
Data Release Frequency: Semi-Annually

SCRD DRYCLEANERS: State Coalition for Remediation of Drycleaners Listing

The State Coalition for Remediation of Drycleaners was established in 1998, with support from the U.S. EPA Office of Superfund Remediation and Technology Innovation. It is comprised of representatives of states with established drycleaner remediation programs. Currently the member states are Alabama, Connecticut, Florida, Illinois, Kansas, Minnesota, Missouri, North Carolina, Oregon, South Carolina, Tennessee, Texas, and Wisconsin.

Date of Government Version: 03/07/2011
Date Data Arrived at EDR: 03/09/2011
Date Made Active in Reports: 05/02/2011
Number of Days to Update: 54

Source: Environmental Protection Agency
Telephone: 615-532-8599
Last EDR Contact: 11/18/2014
Next Scheduled EDR Contact: 02/02/2015
Data Release Frequency: Varies

LEAD SMELTER 1: Lead Smelter Sites
A listing of former lead smelter site locations.

Date of Government Version: 06/04/2014
Date Data Arrived at EDR: 06/12/2014
Date Made Active in Reports: 07/28/2014
Number of Days to Update: 46

Source: Environmental Protection Agency
Telephone: 703-603-8787
Last EDR Contact: 01/05/2015
Next Scheduled EDR Contact: 04/20/2015
Data Release Frequency: Varies

LEAD SMELTER 2: Lead Smelter Sites
A list of several hundred sites in the U.S. where secondary lead smelting was done from 1931and 1964. These sites may pose a threat to public health through ingestion or inhalation of contaminated soil or dust

Date of Government Version: 04/05/2001
Date Data Arrived at EDR: 10/27/2010
Date Made Active in Reports: 12/02/2010
Number of Days to Update: 36

Source: American Journal of Public Health
Telephone: 703-305-6451
Last EDR Contact: 12/02/2009
Next Scheduled EDR Contact: N/A
Data Release Frequency: No Update Planned

2020 COR ACTION: 2020 Corrective Action Program List
The EPA has set ambitious goals for the RCRA Corrective Action program by creating the 2020 Corrective Action Universe. This RCRA cleanup baseline includes facilities expected to need corrective action. The 2020 universe contains a wide variety of sites. Some properties are heavily contaminated while others were contaminated but have since been cleaned up. Still others have not been fully investigated yet, and may require little or no remediation. Inclusion in the 2020 Universe does not necessarily imply failure on the part of a facility to meet its RCRA obligations.

Date of Government Version: 11/11/2011
Date Data Arrived at EDR: 05/18/2012
Date Made Active in Reports: 05/25/2012
Number of Days to Update: 7

Source: Environmental Protection Agency
Telephone: 703-308-4044
Last EDR Contact: 11/14/2014
Next Scheduled EDR Contact: 02/23/2015
Data Release Frequency: Varies

COAL ASH: Coal Ash Site Listing
A listing of coal ash site lcoations.

Date of Government Version: 10/01/2011
Date Data Arrived at EDR: 03/09/2012
Date Made Active in Reports: 04/10/2012
Number of Days to Update: 32

Source: Illinois EPA
Telephone: 217-782-1654
Last EDR Contact: 12/05/2014
Next Scheduled EDR Contact: 03/16/2015
Data Release Frequency: Annually

BOL: Bureau of Land Inventory Database
Bureau of Land inventory for facility information. Data results are cross-linked with all on-line database system applications from IEPA - Bureau of Land as well as USEPA FRS database.

Date of Government Version: 10/08/2014
Date Data Arrived at EDR: 12/04/2014
Date Made Active in Reports: 12/04/2014
Number of Days to Update: 0

Source: Illinois Environmental Protection Agency
Telephone: 217-785-9407
Last EDR Contact: 11/25/2014
Next Scheduled EDR Contact: 03/16/2015
Data Release Frequency: Varies

PRP: Potentially Responsible Parties
A listing of verified Potentially Responsible Parties

Date of Government Version: 10/25/2013
Date Data Arrived at EDR: 10/17/2014
Date Made Active in Reports: 10/20/2014
Number of Days to Update: 3

Source: EPA
Telephone: 202-564-6023
Last EDR Contact: 12/29/2015
Next Scheduled EDR Contact: 04/13/2015
Data Release Frequency: Quarterly

FEDLAND: Federal and Indian Lands

Federally and Indian administrated lands of the United States. Lands included are administrated by: Army Corps of Engineers, Bureau of Reclamation, National Wild and Scenic River, National Wildlife Refuge, Public Domain Land, Wilderness, Wilderness Study Area, Wildlife Management Area, Bureau of Indian Affairs, Bureau of Land Management, Department of Justice, Forest Service, Fish and Wildlife Service, National Park Service.

Date of Government Version: 12/31/2005
Date Data Arrived at EDR: 02/06/2006
Date Made Active in Reports: 01/11/2007
Number of Days to Update: 339

Source: U.S. Geological Survey
Telephone: 888-275-8747
Last EDR Contact: 11/07/2014
Next Scheduled EDR Contact: 01/26/2015
Data Release Frequency: N/A

PIMW: Potentially Infectious Medical Waste

Potentially Infectious Medical Waste (PIMW) is waste generated in connection with the diagnosis, treatment (i.e., provision of medical services), or immunization of human beings or animals; research pertaining to the provision of medical services; or the provision or testing of biologicals.

Date of Government Version: 09/22/2014
Date Data Arrived at EDR: 09/24/2014
Date Made Active in Reports: 11/25/2014
Number of Days to Update: 62

Source: Illinois EPA
Telephone: 217-524-3289
Last EDR Contact: 12/22/2014
Next Scheduled EDR Contact: 04/06/2015
Data Release Frequency: Varies

US AIRS (AFS): Aerometric Information Retrieval System Facility Subsystem (AFS)

The database is a sub-system of Aerometric Information Retrieval System (AIRS). AFS contains compliance data on air pollution point sources regulated by the U.S. EPA and/or state and local air regulatory agencies. This information comes from source reports by various stationary sources of air pollution, such as electric power plants, steel mills, factories, and universities, and provides information about the air pollutants they produce. Action, air program, air program pollutant, and general level plant data. It is used to track emissions and compliance data from industrial plants.

Date of Government Version: 10/16/2014
Date Data Arrived at EDR: 10/31/2014
Date Made Active in Reports: 11/17/2014
Number of Days to Update: 17

Source: EPA
Telephone: 202-564-2496
Last EDR Contact: 12/23/2014
Next Scheduled EDR Contact: 04/13/2015
Data Release Frequency: Annually

US AIRS MINOR: Air Facility System Data

A listing of minor source facilities.

Date of Government Version: 10/16/2014
Date Data Arrived at EDR: 10/31/2014
Date Made Active in Reports: 11/17/2014
Number of Days to Update: 17

Source: EPA
Telephone: 202-564-2496
Last EDR Contact: 12/23/2014
Next Scheduled EDR Contact: 04/13/2015
Data Release Frequency: Annually

US FIN ASSUR: Financial Assurance Information

All owners and operators of facilities that treat, store, or dispose of hazardous waste are required to provide proof that they will have sufficient funds to pay for the clean up, closure, and post-closure care of their facilities.

Date of Government Version: 09/04/2014
Date Data Arrived at EDR: 09/04/2014
Date Made Active in Reports: 10/20/2014
Number of Days to Update: 46

Source: Environmental Protection Agency
Telephone: 202-566-1917
Last EDR Contact: 11/11/2014
Next Scheduled EDR Contact: 03/02/2015
Data Release Frequency: Quarterly

Financial Assurance: Financial Assurance Information Listing

Information for hazardous waste facilities. Financial assurance is intended to ensure that resources are available to pay for the cost of closure, post-closure care, and corrective measures if the owner or operator of a regulated facility is unable or unwilling to pay.

Date of Government Version: 06/13/2014
Date Data Arrived at EDR: 06/13/2014
Date Made Active in Reports: 06/27/2014
Number of Days to Update: 14

Source: Illinois Environmental Protection Agency
Telephone: 217-782-9887
Last EDR Contact: 11/20/2014
Next Scheduled EDR Contact: 03/09/2015
Data Release Frequency: Varies

COAL ASH EPA: Coal Combustion Residues Surface Impoundments List
A listing of coal combustion residues surface impoundments with high hazard potential ratings.

Date of Government Version: 07/01/2014
Date Data Arrived at EDR: 09/10/2014
Date Made Active in Reports: 10/20/2014
Number of Days to Update: 40

Source: Environmental Protection Agency
Telephone: N/A
Last EDR Contact: 12/12/2014
Next Scheduled EDR Contact: 03/23/2015
Data Release Frequency: Varies

PCB TRANSFORMER: PCB Transformer Registration Database
The database of PCB transformer registrations that includes all PCB registration submittals.

Date of Government Version: 02/01/2011
Date Data Arrived at EDR: 10/19/2011
Date Made Active in Reports: 01/10/2012
Number of Days to Update: 83

Source: Environmental Protection Agency
Telephone: 202-566-0517
Last EDR Contact: 10/31/2014
Next Scheduled EDR Contact: 02/09/2015
Data Release Frequency: Varies

COAL ASH DOE: Sleam-Electric Plan Operation Data
A listing of power plants that store ash in surface ponds.

Date of Government Version: 12/31/2005
Date Data Arrived at EDR: 08/07/2009
Date Made Active in Reports: 10/22/2009
Number of Days to Update: 76

Source: Department of Energy
Telephone: 202-586-8719
Last EDR Contact: 10/17/2014
Next Scheduled EDR Contact: 01/26/2015
Data Release Frequency: Varies

CHICAGO ENV: Environmental Records Dataset
This dataset serves as a lookup table to determine if environmental records exist in a Chicago Department of Public Health (CDPH) environmental dataset for a given address. COMPLAINTS: A 'Y? indicates that one or more records exist in the CDPH Environmental Complaints dataset. NESHAPS & DEMOLITON NOTICES: A 'Y? indicates that one or more records exist in the CDPH Asbestos and Demolition Notification dataset. ENFORCEMENT: A 'Y? indicates that one or more records exist in the CDPH Environmental Enforcement dataset. INSPECTIONS: A 'Y? indicates that one or more records exist in the CDPH Environmental Inspections dataset. PERMITS: A 'Y? indicates that one or more records exist in the CDPH Environmental Permits dataset. TANKS: A 'Y? indicates that one or more records exist in the CDPH Storage Tanks dataset.

Date of Government Version: 10/30/2014
Date Data Arrived at EDR: 12/22/2014
Date Made Active in Reports: 12/29/2014
Number of Days to Update: 7

Source: Chicago Department of Public Health
Telephone: 312-745-3136
Last EDR Contact: 12/22/2014
Next Scheduled EDR Contact: 04/06/2015
Data Release Frequency: Varies

EPA WATCH LIST: EPA WATCH LIST
EPA maintains a "Watch List" to facilitate dialogue between EPA, state and local environmental agencies on enforcement matters relating to facilities with alleged violations identified as either significant or high priority. Being on the Watch List does not mean that the facility has actually violated the law only that an investigation by EPA or a state or local environmental agency has led those organizations to allege that an unproven violation has in fact occurred. Being on the Watch List does not represent a higher level of concern regarding the alleged violations that were detected, but instead indicates cases requiring additional dialogue between EPA, state and local agencies - primarily because of the length of time the alleged violation has gone unaddressed or unresolved.

Date of Government Version: 08/30/2013
Date Data Arrived at EDR: 03/21/2014
Date Made Active in Reports: 06/17/2014
Number of Days to Update: 88

Source: Environmental Protection Agency
Telephone: 617-520-3000
Last EDR Contact: 11/14/2014
Next Scheduled EDR Contact: 02/23/2015
Data Release Frequency: Quarterly

GOVERNMENT RECORDS SEARCHED / DATA CURRENCY TRACKING

EDR HIGH RISK HISTORICAL RECORDS

EDR Exclusive Records

EDR MGP: EDR Proprietary Manufactured Gas Plants

The EDR Proprietary Manufactured Gas Plant Database includes records of coal gas plants (manufactured gas plants) compiled by EDR's researchers. Manufactured gas sites were used in the United States from the 1800's to 1950's to produce a gas that could be distributed and used as fuel. These plants used whale oil, rosin, coal, or a mixture of coal, oil, and water that also produced a significant amount of waste. Many of the byproducts of the gas production, such as coal tar (oily waste containing volatile and non-volatile chemicals), sludges, oils and other compounds are potentially hazardous to human health and the environment. The byproduct from this process was frequently disposed of directly at the plant site and can remain or spread slowly, serving as a continuous source of soil and groundwater contamination.

Date of Government Version: N/A
Date Data Arrived at EDR: N/A
Date Made Active in Reports: N/A
Number of Days to Update: N/A

Source: EDR, Inc.
Telephone: N/A
Last EDR Contact: N/A
Next Scheduled EDR Contact: N/A
Data Release Frequency: No Update Planned

EDR US Hist Auto Stat: EDR Exclusive Historic Gas Stations

EDR has searched selected national collections of business directories and has collected listings of potential gas station/filling station/service station sites that were available to EDR researchers. EDR's review was limited to those categories of sources that might, in EDR's opinion, include gas station/filling station/service station establishments. The categories reviewed included, but were not limited to gas, gas station, gasoline station, filling station, auto, automobile repair, auto service station, service station, etc. This database falls within a category of information EDR classifies as "High Risk Historical Records", or HRHR. EDR's HRHR effort presents unique and sometimes proprietary data about past sites and operations that typically create environmental concerns, but may not show up in current government records searches.

Date of Government Version: N/A
Date Data Arrived at EDR: N/A
Date Made Active in Reports: N/A
Number of Days to Update: N/A

Source: EDR, Inc.
Telephone: N/A
Last EDR Contact: N/A
Next Scheduled EDR Contact: N/A
Data Release Frequency: Varies

EDR US Hist Cleaners: EDR Exclusive Historic Dry Cleaners

EDR has searched selected national collections of business directories and has collected listings of potential dry cleaner sites that were available to EDR researchers. EDR's review was limited to those categories of sources that might, in EDR's opinion, include dry cleaning establishments. The categories reviewed included, but were not limited to dry cleaners, cleaners, laundry, laundromat, cleaning/laundry, wash & dry etc. This database falls within a category of information EDR classifies as "High Risk Historical Records", or HRHR. EDR's HRHR effort presents unique and sometimes proprietary data about past sites and operations that typically create environmental concerns, but may not show up in current government records searches.

Date of Government Version: N/A
Date Data Arrived at EDR: N/A
Date Made Active in Reports: N/A
Number of Days to Update: N/A

Source: EDR, Inc.
Telephone: N/A
Last EDR Contact: N/A
Next Scheduled EDR Contact: N/A
Data Release Frequency: Varies

EDR RECOVERED GOVERNMENT ARCHIVES

Exclusive Recovered Govt. Archives

RGA LF: Recovered Government Archive Solid Waste Facilities List

The EDR Recovered Government Archive Landfill database provides a list of landfills derived from historical databases and includes many records that no longer appear in current government lists. Compiled from Records formerly available from the Illinois Environmental Protection Agency in Illinois.

Date of Government Version: N/A
Date Data Arrived at EDR: 07/01/2013
Date Made Active in Reports: 01/10/2014
Number of Days to Update: 193

Source: Illinois Environmental Protection Agency
Telephone: N/A
Last EDR Contact: 06/01/2012
Next Scheduled EDR Contact: N/A
Data Release Frequency: Varies

RGA LUST: Recovered Government Archive Leaking Underground Storage Tank

The EDR Recovered Government Archive Leaking Underground Storage Tank database provides a list of LUST incidents derived from historical databases and includes many records that no longer appear in current government lists. Compiled from Records formerly available from the Illinois Environmental Protection Agency in Illinois.

Date of Government Version: N/A
Date Data Arrived at EDR: 07/01/2013
Date Made Active in Reports: 12/30/2013
Number of Days to Update: 182

Source: Illinois Environmental Protection Agency
Telephone: N/A
Last EDR Contact: 06/01/2012
Next Scheduled EDR Contact: N/A
Data Release Frequency: Varies

RGA HWS: Recovered Government Archive State Hazardous Waste Facilities List

The EDR Recovered Government Archive State Hazardous Waste database provides a list of SHWS incidents derived from historical databases and includes many records that no longer appear in current government lists. Compiled from Records formerly available from the Department of Natural Resources in Illinois.

Date of Government Version: N/A
Date Data Arrived at EDR: 07/01/2013
Date Made Active in Reports: 12/30/2013
Number of Days to Update: 182

Source: Department of Natural Resources
Telephone: N/A
Last EDR Contact: 06/01/2012
Next Scheduled EDR Contact: N/A
Data Release Frequency: Varies

OTHER DATABASE(S)

Depending on the geographic area covered by this report, the data provided in these specialty databases may or may not be complete. For example, the existence of wetlands information data in a specific report does not mean that all wetlands in the area covered by the report are included. Moreover, the absence of any reported wetlands information does not necessarily mean that wetlands do not exist in the area covered by the report.

CT MANIFEST: Hazardous Waste Manifest Data

Facility and manifest data. Manifest is a document that lists and tracks hazardous waste from the generator through transporters to a tsd facility.

Date of Government Version: 07/30/2013
Date Data Arrived at EDR: 08/19/2013
Date Made Active in Reports: 10/03/2013
Number of Days to Update: 45

Source: Department of Energy & Environmental Protection
Telephone: 860-424-3375
Last EDR Contact: 11/17/2014
Next Scheduled EDR Contact: 03/02/2015
Data Release Frequency: No Update Planned

NJ MANIFEST: Manifest Information

Hazardous waste manifest information.

Date of Government Version: 12/31/2011
Date Data Arrived at EDR: 07/19/2012
Date Made Active in Reports: 08/28/2012
Number of Days to Update: 40

Source: Department of Environmental Protection
Telephone: N/A
Last EDR Contact: 01/12/2015
Next Scheduled EDR Contact: 04/27/2015
Data Release Frequency: Annually

NY MANIFEST: Facility and Manifest Data

Manifest is a document that lists and tracks hazardous waste from the generator through transporters to a TSD facility.

Date of Government Version: 11/01/2014
Date Data Arrived at EDR: 11/05/2014
Date Made Active in Reports: 11/24/2014
Number of Days to Update: 19

Source: Department of Environmental Conservation
Telephone: 518-402-8651
Last EDR Contact: 11/05/2014
Next Scheduled EDR Contact: 02/16/2015
Data Release Frequency: Annually

PA MANIFEST: Manifest Information
Hazardous waste manifest information.

Date of Government Version: 12/31/2013
Date Data Arrived at EDR: 07/21/2014
Date Made Active in Reports: 08/25/2014
Number of Days to Update: 35

Source: Department of Environmental Protection
Telephone: 717-783-8990
Last EDR Contact: 10/20/2014
Next Scheduled EDR Contact: 02/02/2015
Data Release Frequency: Annually

RI MANIFEST: Manifest information
Hazardous waste manifest information

Date of Government Version: 12/31/2013
Date Data Arrived at EDR: 07/15/2014
Date Made Active in Reports: 08/13/2014
Number of Days to Update: 29

Source: Department of Environmental Management
Telephone: 401-222-2797
Last EDR Contact: 11/26/2014
Next Scheduled EDR Contact: 03/09/2015
Data Release Frequency: Annually

WI MANIFEST: Manifest Information
Hazardous waste manifest information.

Date of Government Version: 12/31/2013
Date Data Arrived at EDR: 06/20/2014
Date Made Active in Reports: 08/07/2014
Number of Days to Update: 48

Source: Department of Natural Resources
Telephone: N/A
Last EDR Contact: 12/12/2014
Next Scheduled EDR Contact: 03/30/2015
Data Release Frequency: Annually

Oil/Gas Pipelines: This data was obtained by EDR from the USGS in 1994. It is referred to by USGS as GeoData Digital Line Graphs from 1:100,000-Scale Maps. It was extracted from the transportation category including some oil, but primarily gas pipelines.

Sensitive Receptors: There are individuals deemed sensitive receptors due to their fragile immune systems and special sensitivity to environmental discharges. These sensitive receptors typically include the elderly, the sick, and children. While the location of all sensitive receptors cannot be determined, EDR indicates those buildings and facilities - schools, daycares, hospitals, medical centers, and nursing homes - where individuals who are sensitive receptors are likely to be located.

AHA Hospitals:
Source: American Hospital Association, Inc.
Telephone: 312-280-5991
The database includes a listing of hospitals based on the American Hospital Association's annual survey of hospitals.

Medical Centers: Provider of Services Listing
Source: Centers for Medicare & Medicaid Services
Telephone: 410-786-3000
A listing of hospitals with Medicare provider number, produced by Centers of Medicare & Medicaid Services, a federal agency within the U.S. Department of Health and Human Services.

Nursing Homes
Source: National Institutes of Health
Telephone: 301-594-6248
Information on Medicare and Medicaid certified nursing homes in the United States.

Public Schools
Source: National Center for Education Statistics
Telephone: 202-502-7300
The National Center for Education Statistics' primary database on elementary and secondary public education in the United States. It is a comprehensive, annual, national statistical database of all public elementary and secondary schools and school districts, which contains data that are comparable across all states.

GOVERNMENT RECORDS SEARCHED / DATA CURRENCY TRACKING

Private Schools
Source: National Center for Education Statistics
Telephone: 202-502-7300
The National Center for Education Statistics' primary database on private school locations in the United States.
Daycare Centers: Homes & Centers Listing
Source: Department of Children & Family Services
Telephone: 312-814-4150

Flood Zone Data: This data, available in select counties across the country, was obtained by EDR in 2003 & 2011 from the Federal Emergency Management Agency (FEMA). Data depicts 100-year and 500-year flood zones as defined by FEMA.

NWI: National Wetlands Inventory. This data, available in select counties across the country, was obtained by EDR in 2002, 2005 and 2010 from the U.S. Fish and Wildlife Service.

Scanned Digital USGS 7.5' Topographic Map (DRG)
Source: United States Geologic Survey
A digital raster graphic (DRG) is a scanned image of a U.S. Geological Survey topographic map. The map images are made by scanning published paper maps on high-resolution scanners. The raster image is georeferenced and fit to the Universal Transverse Mercator (UTM) projection.

STREET AND ADDRESS INFORMATION

© 2010 Tele Atlas North America, Inc. All rights reserved. This material is proprietary and the subject of copyright protection and other intellectual property rights owned by or licensed to Tele Atlas North America, Inc. The use of this material is subject to the terms of a license agreement. You will be held liable for any unauthorized copying or disclosure of this material.

GEOCHECK®- PHYSICAL SETTING SOURCE ADDENDUM

TARGET PROPERTY ADDRESS

VACANT LAND ON WEST 83RD STREET
650 WEST 83RD STREET
CHICAGO, IL 60620

TARGET PROPERTY COORDINATES

Latitude (North):	41.7444 - 41° 44' 39.84"
Longitude (West):	87.6403 - 87° 38' 25.08"
Universal Tranverse Mercator:	Zone 16
UTM X (Meters):	446758.6
UTM Y (Meters):	4621383.0
Elevation:	601 ft. above sea level

USGS TOPOGRAPHIC MAP

Target Property Map:	41087-F6 BLUE ISLAND, IL
Most Recent Revision:	1997
North Map:	41087-G6 ENGLEWOOD, IL
Most Recent Revision:	1997
Northeast Map:	41087-G5 JACKSON PARK, IL IN
Most Recent Revision:	1998
East Map:	41087-F5 LAKE CALUMET, IL IN
Most Recent Revision:	1997

EDR's GeoCheck Physical Setting Source Addendum is provided to assist the environmental professional in forming an opinion about the impact of potential contaminant migration.

Assessment of the impact of contaminant migration generally has two principal investigative components:

1. Groundwater flow direction, and
2. Groundwater flow velocity.

Groundwater flow direction may be impacted by surface topography, hydrology, hydrogeology, characteristics of the soil, and nearby wells. Groundwater flow velocity is generally impacted by the nature of the geologic strata.

GEOCHECK® - PHYSICAL SETTING SOURCE SUMMARY

GROUNDWATER FLOW DIRECTION INFORMATION

Groundwater flow direction for a particular site is best determined by a qualified environmental professional using site-specific well data. If such data is not reasonably ascertainable, it may be necessary to rely on other sources of information, such as surface topographic information, hydrologic information, hydrogeologic data collected on nearby properties, and regional groundwater flow information (from deep aquifers).

TOPOGRAPHIC INFORMATION

Surface topography may be indicative of the direction of surficial groundwater flow. This information can be used to assist the environmental professional in forming an opinion about the impact of nearby contaminated properties or, should contamination exist on the target property, what downgradient sites might be impacted.

TARGET PROPERTY TOPOGRAPHY

General Topographic Gradient: General SE

SURROUNDING TOPOGRAPHY: ELEVATION PROFILES

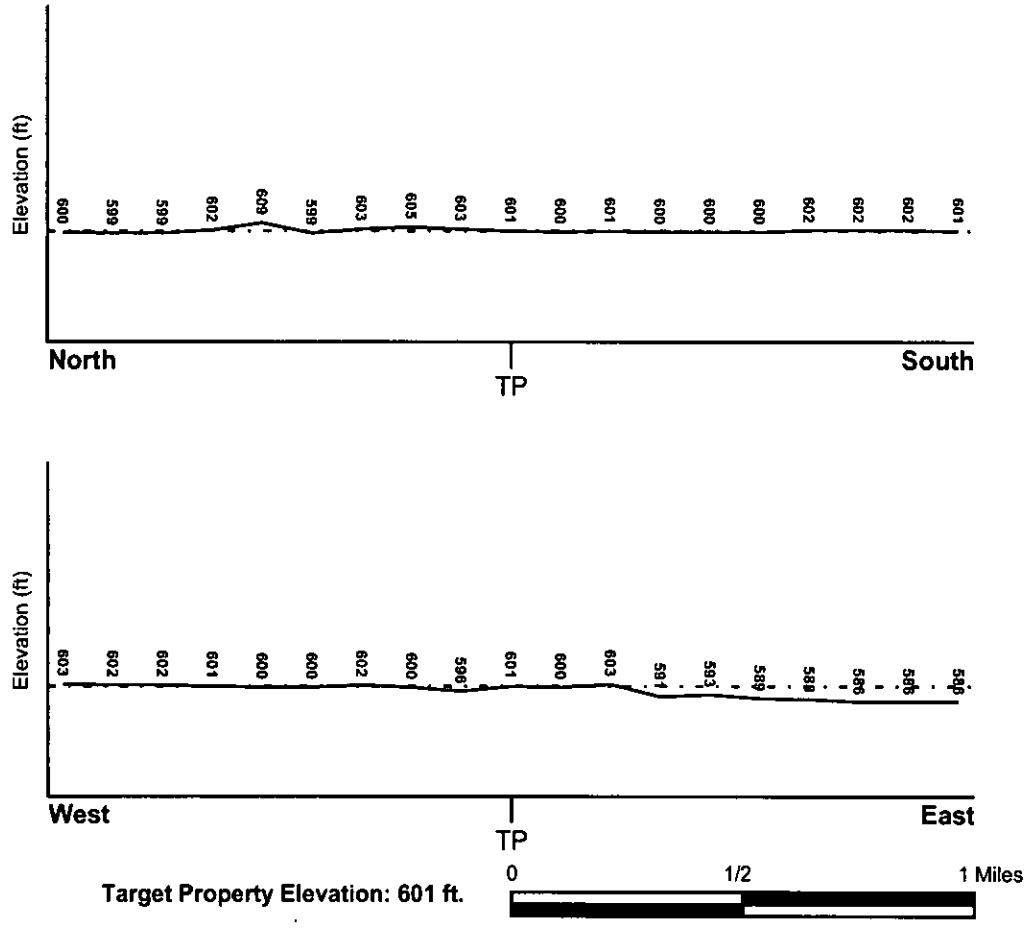

Source: Topography has been determined from the USGS 7.5' Digital Elevation Model and should be evaluated on a relative (not an absolute) basis. Relative elevation information between sites of close proximity should be field verified.

GEOCHECK® - PHYSICAL SETTING SOURCE SUMMARY

HYDROLOGIC INFORMATION

Surface water can act as a hydrologic barrier to groundwater flow. Such hydrologic information can be used to assist the environmental professional in forming an opinion about the impact of nearby contaminated properties or, should contamination exist on the target property, what downgradient sites might be impacted.

Refer to the Physical Setting Source Map following this summary for hydrologic information (major waterways and bodies of water).

FEMA FLOOD ZONE

Target Property County	FEMA Flood Electronic Data
COOK, IL	YES - refer to the Overview Map and Detail Map

Flood Plain Panel at Target Property: 17031C - FEMA DFIRM Flood data

Additional Panels in search area: Not Reported

NATIONAL WETLAND INVENTORY

NWI Quad at Target Property	NWI Electronic Data Coverage
BLUE ISLAND	YES - refer to the Overview Map and Detail Map

HYDROGEOLOGIC INFORMATION

Hydrogeologic information obtained by installation of wells on a specific site can often be an indicator of groundwater flow direction in the immediate area. Such hydrogeologic information can be used to assist the environmental professional in forming an opinion about the impact of nearby contaminated properties or, should contamination exist on the target property, what downgradient sites might be impacted.

Site-Specific Hydrogeological Data*:

Search Radius: 1.25 miles
Status: Not found

AQUIFLOW®

Search Radius: 1.000 Mile.

EDR has developed the AQUIFLOW Information System to provide data on the general direction of groundwater flow at specific points. EDR has reviewed reports submitted by environmental professionals to regulatory authorities at select sites and has extracted the date of the report, groundwater flow direction as determined hydrogeologically, and the depth to water table.

MAP ID	LOCATION FROM TP	GENERAL DIRECTION GROUNDWATER FLOW
8	1/2 - 1 Mile ESE	S
C10	1/2 - 1 Mile ENE	SSE, S
11	1/2 - 1 Mile East	Not Reported
C12	1/2 - 1 Mile ENE	NE
15	1/2 - 1 Mile NNE	Not Reported
19	1/2 - 1 Mile NE	Not Reported

For additional site information, refer to Physical Setting Source Map Findings.

* ©1998 Site-specific hydrogeological data gathered by CERCLIS Alerts, Inc., Bainbridge Island, WA. All rights reserved. All of the information and opinions presented are those of the cited EPA report(s), which were completed under a Comprehensive Environmental Response Compensation and Liability Information System (CERCLIS) investigation.

GEOCHECK® - PHYSICAL SETTING SOURCE SUMMARY

GROUNDWATER FLOW VELOCITY INFORMATION

Groundwater flow velocity information for a particular site is best determined by a qualified environmental professional using site specific geologic and soil strata data. If such data are not reasonably ascertainable, it may be necessary to rely on other sources of information, including geologic age identification, rock stratigraphic unit and soil characteristics data collected on nearby properties and regional soil information. In general, contaminant plumes move more quickly through sandy-gravelly types of soils than silty-clayey types of soils.

GEOLOGIC INFORMATION IN GENERAL AREA OF TARGET PROPERTY

Geologic information can be used by the environmental professional in forming an opinion about the relative speed at which contaminant migration may be occurring.

ROCK STRATIGRAPHIC UNIT

Era:	Paleozoic
System:	Silurian
Series:	Middle Silurian (Niagoaran)
Code:	S2 *(decoded above as Era, System & Series)*

GEOLOGIC AGE IDENTIFICATION

Category: Stratifed Sequence

Geologic Age and Rock Stratigraphic Unit Source: P.G. Schruben, R.E. Arndt and W.J. Bawiec, Geology of the Conterminous U.S. at 1:2,500,000 Scale - a digital representation of the 1974 P.B. King and H.M. Beikman Map, USGS Digital Data Series DDS - 11 (1994).

DOMINANT SOIL COMPOSITION IN GENERAL AREA OF TARGET PROPERTY

The U.S. Department of Agriculture's (USDA) Soil Conservation Service (SCS) leads the National Cooperative Soil Survey (NCSS) and is responsible for collecting, storing, maintaining and distributing soil survey information for privately owned lands in the United States. A soil map in a soil survey is a representation of soil patterns in a landscape. Soil maps for STATSGO are compiled by generalizing more detailed (SSURGO) soil survey maps. The following information is based on Soil Conservation Service STATSGO data.

Soil Component Name:	URBANLAND
Soil Surface Texture:	variable
Hydrologic Group:	Not reported
Soil Drainage Class:	Not reported

Hydric Status: Soil does not meet the requirements for a hydric soil.

Corrosion Potential - Uncoated Steel:	Not Reported
Depth to Bedrock Min:	> 0 inches
Depth to Bedrock Max:	> 0 inches

GEOCHECK® - PHYSICAL SETTING SOURCE SUMMARY

Soil Layer Information							
	Boundary			Classification			
Layer	Upper	Lower	Soil Texture Class	AASHTO Group	Unified Soil	Permeability Rate (in/hr)	Soil Reaction (pH)
1	0 inches	60 inches	variable	Not reported	Not reported	Max: 0.00 Min: 0.00	Max: 0.00 Min: 0.00

OTHER SOIL TYPES IN AREA

Based on Soil Conservation Service STATSGO data, the following additional subordinant soil types may appear within the general area of target property.

Soil Surface Textures: silt loam
fine sandy loam
loam
fine sand

Surficial Soil Types: silt loam
fine sandy loam
loam
fine sand

Shallow Soil Types: sandy loam

Deeper Soil Types: silt loam
sand
loamy sand
loam

LOCAL / REGIONAL WATER AGENCY RECORDS

EDR Local/Regional Water Agency records provide water well information to assist the environmental professional in assessing sources that may impact ground water flow direction, and in forming an opinion about the impact of contaminant migration on nearby drinking water wells.

WELL SEARCH DISTANCE INFORMATION

DATABASE	SEARCH DISTANCE (miles)
Federal USGS	1.000
Federal FRDS PWS	Nearest PWS within 1 mile
State Database	1.000

FEDERAL USGS WELL INFORMATION

MAP ID	WELL ID	LOCATION FROM TP

GEOCHECK® - PHYSICAL SETTING SOURCE SUMMARY

FEDERAL USGS WELL INFORMATION

MAP ID	WELL ID	LOCATION FROM TP
No Wells Found		

FEDERAL FRDS PUBLIC WATER SUPPLY SYSTEM INFORMATION

MAP ID	WELL ID	LOCATION FROM TP
No PWS System Found		

Note: PWS System location is not always the same as well location.

STATE DATABASE WELL INFORMATION

MAP ID	WELL ID	LOCATION FROM TP
1	ILSG20000202391	1/4 - 1/2 Mile South
2	P6702	1/4 - 1/2 Mile South
A3	ILSG20000203083	1/2 - 1 Mile ENE
A4	P6701	1/2 - 1 Mile ENE
5	ILSG20000202599	1/2 - 1 Mile WSW
B6	P6699	1/2 - 1 Mile SW
B7	P6700	1/2 - 1 Mile SW
9	P6704	1/2 - 1 Mile ENE
13	ILSG20000203457	1/2 - 1 Mile ENE
14	P6684	1/2 - 1 Mile NNE
D16	ILSG20000201406	1/2 - 1 Mile SSE
D17	P5488	1/2 - 1 Mile SSE
D18	P5489	1/2 - 1 Mile SSE

PHYSICAL SETTING SOURCE MAP - 4180624.2s

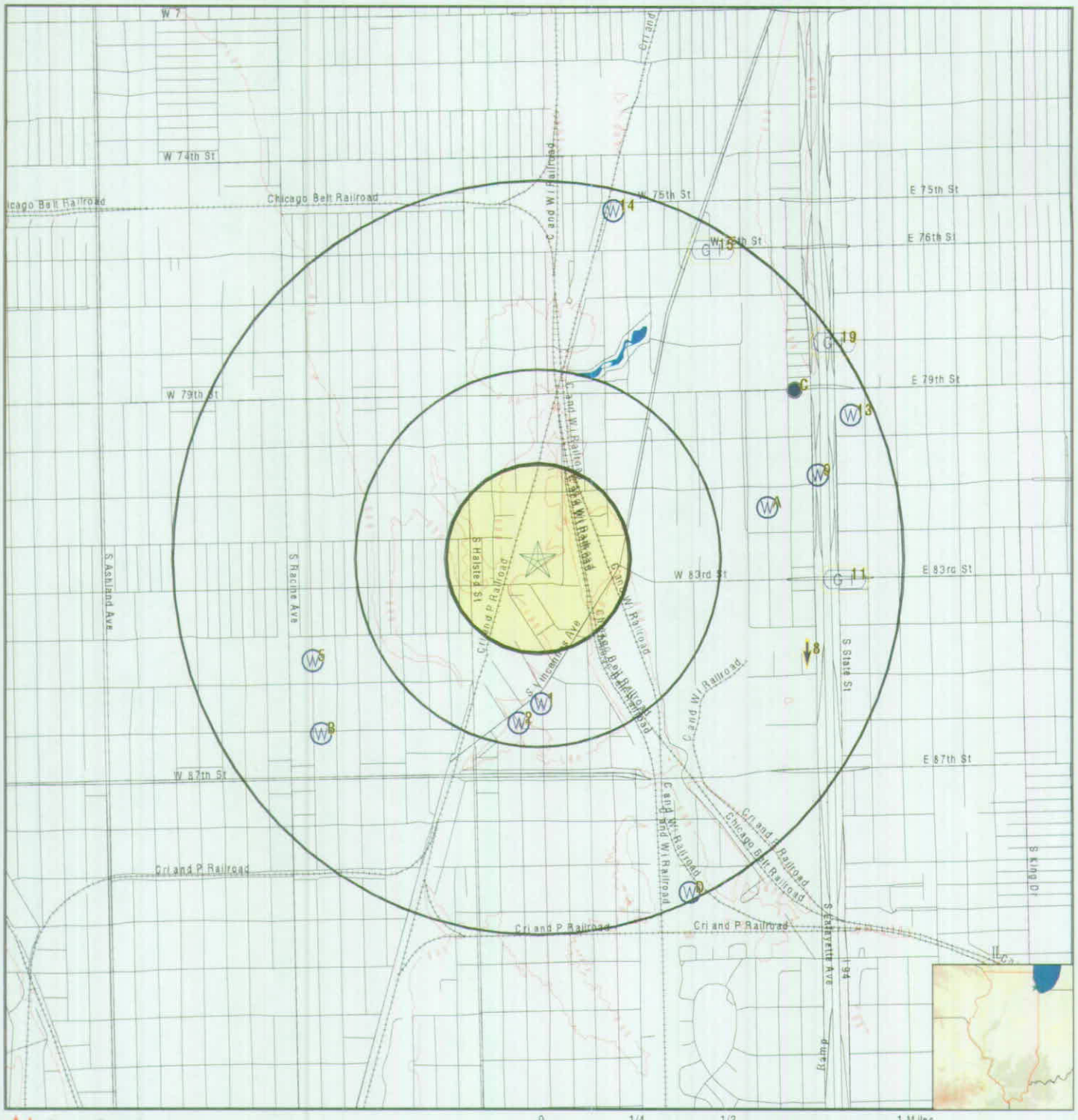

- County Boundary
- Major Roads
- Contour Lines
- Earthquake epicenter, Richter 5 or greater
- Water Wells
- Public Water Supply Wells
- Cluster of Multiple Icons

- Groundwater Flow Direction
- Indeterminate Groundwater Flow at Location
- Groundwater Flow Varies at Location
- Closest Hydrogeological Data

SITE NAME: Vacant Land On West 83rd Street	CLIENT: Terracon, Inc.
ADDRESS: 650 West 83rd Street Chicago IL 60620	CONTACT: Lauren Trzaskus
LAT/LONG: 41.7444 / 87.6403	INQUIRY #: 4180624.2s DATE: January 13, 2015 3:02 pm

Copyright © 2015 EDR, Inc. © 2010 Tele Atlas Rel 07/2009.

Illinois EPA FOIA Exemption Reference Sheet

SID: 33227

Agency ID: 170001848311 Media File Type: LAND
Bureau ID: 0316715228
Site Name: Chicago, City of-Dept of Fleet Mgmt/Old City Pound
Site Address1: 650 W 83rd St
Site Address2:
Site City: Chicago State: IL Zip: 60620-

This record has been determined to be partially or wholly exempt from public disclosure

Exemption Type:

Portion Removed

Exempt Doc #: 2 **Document Date:** 6 /1 /2015 **Staff:** MED

Document Description: PHASE I ENVIRONMENTAL SITE ASSESSMENT APPENDIX D

Category ID: 31A **Category Description:** SITE REMEDIATION - TECHNICAL **Exempt Type:** Portion Removed
Permit ID: **Date of Determination:** 6 /8 /2015

GEOCHECK® - PHYSICAL SETTING SOURCE MAP FINDINGS
RADON

AREA RADON INFORMATION

State Database: IL Radon

Radon Test Results

Zipcode	Result
60620	1

Federal EPA Radon Zone for COOK County: 2

Note: Zone 1 indoor average level > 4 pCi/L.
: Zone 2 indoor average level >= 2 pCi/L and <= 4 pCi/L.
: Zone 3 indoor average level < 2 pCi/L.

Federal Area Radon Information for COOK COUNTY, IL

Number of sites tested: 82

Area	Average Activity	% <4 pCi/L	% 4-20 pCi/L	% >20 pCi/L
Living Area - 1st Floor	1.273 pCi/L	96%	4%	0%
Living Area - 2nd Floor	0.900 pCi/L	100%	0%	0%
Basement	1.740 pCi/L	93%	7%	0%

PHYSICAL SETTING SOURCE RECORDS SEARCHED

TOPOGRAPHIC INFORMATION

USGS 7.5' Digital Elevation Model (DEM)
Source: United States Geologic Survey
EDR acquired the USGS 7.5' Digital Elevation Model in 2002 and updated it in 2006. The 7.5 minute DEM corresponds to the USGS 1:24,000- and 1:25,000-scale topographic quadrangle maps. The DEM provides elevation data with consistent elevation units and projection.

Scanned Digital USGS 7.5' Topographic Map (DRG)
Source: United States Geologic Survey
A digital raster graphic (DRG) is a scanned image of a U.S. Geological Survey topographic map. The map images are made by scanning published paper maps on high-resolution scanners. The raster image is georeferenced and fit to the Universal Transverse Mercator (UTM) projection.

HYDROLOGIC INFORMATION

Flood Zone Data: This data, available in select counties across the country, was obtained by EDR in 2003 & 2011 from the Federal Emergency Management Agency (FEMA). Data depicts 100-year and 500-year flood zones as defined by FEMA.

NWI: National Wetlands Inventory. This data, available in select counties across the country, was obtained by EDR in 2002, 2005 and 2010 from the U.S. Fish and Wildlife Service.

HYDROGEOLOGIC INFORMATION

AQUIFLOW^{R} Information System
Source: EDR proprietary database of groundwater flow information
EDR has developed the AQUIFLOW Information System (AIS) to provide data on the general direction of groundwater flow at specific points. EDR has reviewed reports submitted to regulatory authorities at select sites and has extracted the date of the report, hydrogeologically determined groundwater flow direction and depth to water table information.

GEOLOGIC INFORMATION

Geologic Age and Rock Stratigraphic Unit
Source: P.G. Schruben, R.E. Arndt and W.J. Bawiec, Geology of the Conterminous U.S. at 1:2,500,000 Scale - A digital representation of the 1974 P.B. King and H.M. Beikman Map, USGS Digital Data Series DDS - 11 (1994).

STATSGO: State Soil Geographic Database
Source: Department of Agriculture, Natural Resources Conservation Services
The U.S. Department of Agriculture's (USDA) Natural Resources Conservation Service (NRCS) leads the national Conservation Soil Survey (NCSS) and is responsible for collecting, storing, maintaining and distributing soil survey information for privately owned lands in the United States. A soil map in a soil survey is a representation of soil patterns in a landscape. Soil maps for STATSGO are compiled by generalizing more detailed (SSURGO) soil survey maps.

SSURGO: Soil Survey Geographic Database
Source: Department of Agriculture, Natural Resources Conservation Services (NRCS)
Telephone: 800-672-5559
SSURGO is the most detailed level of mapping done by the Natural Resources Conservation Services, mapping scales generally range from 1:12,000 to 1:63,360. Field mapping methods using national standards are used to construct the soil maps in the Soil Survey Geographic (SSURGO) database. SSURGO digitizing duplicates the original soil survey maps. This level of mapping is designed for use by landowners, townships and county natural resource planning and management.

PHYSICAL SETTING SOURCE RECORDS SEARCHED

LOCAL / REGIONAL WATER AGENCY RECORDS

FEDERAL WATER WELLS

PWS: Public Water Systems
Source: EPA/Office of Drinking Water
Telephone: 202-564-3750
Public Water System data from the Federal Reporting Data System. A PWS is any water system which provides water to at least 25 people for at least 60 days annually. PWSs provide water from wells, rivers and other sources.

PWS ENF: Public Water Systems Violation and Enforcement Data
Source: EPA/Office of Drinking Water
Telephone: 202-564-3750
Violation and Enforcement data for Public Water Systems from the Safe Drinking Water Information System (SDWIS) after August 1995. Prior to August 1995, the data came from the Federal Reporting Data System (FRDS).

USGS Water Wells: USGS National Water Inventory System (NWIS)
This database contains descriptive information on sites where the USGS collects or has collected data on surface water and/or groundwater. The groundwater data includes information on wells, springs, and other sources of groundwater.

STATE RECORDS

Water Well Records
Source: Illinois Geological Survey
Telephone: 217-333-4747

Illinois Private Well Database and PICS (Public, Industrial, Commercial Survey)
Source: Illinois State Water Survey
Telephone: 217-333-9043

Water Well Location Information
Source: Illinois Environmental Protection Agency
Telephone: 217-782-0810

OTHER STATE DATABASE INFORMATION

RADON

State Database: IL Radon
Source: Department of Nuclear Safety
Telephone: 217-785-9958
County Radon Results

Area Radon Information
Source: USGS
Telephone: 703-356-4020
The National Radon Database has been developed by the U.S. Environmental Protection Agency (USEPA) and is a compilation of the EPA/State Residential Radon Survey and the National Residential Radon Survey. The study covers the years 1986 - 1992. Where necessary data has been supplemented by information collected at private sources such as universities and research institutions.

EPA Radon Zones
Source: EPA
Telephone: 703-356-4020
Sections 307 & 309 of IRAA directed EPA to list and identify areas of U.S. with the potential for elevated indoor radon levels.

OTHER

Airport Landing Facilities: Private and public use landing facilities
Source: Federal Aviation Administration, 800-457-6656

Epicenters: World earthquake epicenters, Richter 5 or greater
Source: Department of Commerce, National Oceanic and Atmospheric Administration

Earthquake Fault Lines: The fault lines displayed on EDR's Topographic map are digitized quaternary faultlines, prepared in 1975 by the United State Geological Survey

PHYSICAL SETTING SOURCE RECORDS SEARCHED

STREET AND ADDRESS INFORMATION

© 2010 Tele Atlas North America, Inc. All rights reserved. This material is proprietary and the subject of copyright protection and other intellectual property rights owned by or licensed to Tele Atlas North America, Inc. The use of this material is subject to the terms of a license agreement. You will be held liable for any unauthorized copying or disclosure of this material.

APPENDIX E

FOIA Requests / Responses

CITY OF CHICAGO
Freedom of Information Request

Requestor's Name:	Lauren Trzaskus	Address:	135 Ambassador Drive				
Telephone Number:	630-717-4263	City	Naperville	State	IL	Zip	60540
Fax Number:	630-357-9489	Email	lftrzaskus@terracon.com				
Organization (if any):	Terracon Consultants, Inc.						

Records sought (be specific): I am requesting building department records (permits for UST installations, records of hazardous waste, demolition permits, construction permits, etc.) for the following Cook County PINs in Chicago: 20-33-119-024 (8158 South Wallace), 20-33-124-001 (650 West 83rd Street), and 20-33-124-002 (8234 South Wallace). Additionally, I am seeking similar information for the following nearby addresses: 657 West 83rd, 8300 South Birkhoff Avenue, 8316 South Birkhoff Avenue, 8303 South Wallace, 541 West 83rd Street, 8331 South Wallace, 631 West 81st Street, 8120 South Wallace, 631 West 81st Street and 8236 South Wallace.

☐ This request is being made for a commercial purpose. Section 2(c-10) of FOIA defines "commercial purpose" as the us e of any part of a public record or records, or information derived from public records, in any form for sale , resale, or solicitation or advertisement for sales or services. For purposes of this definition, requests made by news media and non-profit, scientific, or academic organizations shall not be considered to be made for a "commercial purpose" when the principal purpose of the request is (i) to access and disseminate information concerning news and current or passing events, (ii) for articles of opinion or features of interest to the pub lic, or (iii) for the purpose of academic, scientific, or public research or education.

☐ This request is not being made for a commercial purpose.

Signature

[For optional use only]

CDPH Environmental Inspections

Based on CDPH Environmental Inspections

INSPECTION ID	MODIFIED DATE	INSPECTION NAME	MAPPED LOCATION
482069	11/28/2012		650 W 83RD ST CHICAGO, ILLINOIS (41.74344776800007, -87.64129214699994)

CDPH Environmental Inspections

Based on CDPH Environmental Inspections

STREET NUMBER FROM	STREET NUMBER TO	DIRECTION	STREET NAME
650		W	83RD

CDPH Environmental Inspections

Based on CDPH Environmental Inspections

STREET TYPE	INSPECTION CATEGORY
ST	SOLID WASTE INSPECTIONS

CDPH Environmental Inspections

Based on CDPH Environmental Inspections

INSPECTION SUB CATEGORY	INSPECTOR
ILLEGAL DUMPING	8386

CDPH Environmental Inspections

Based on CDPH Environmental Inspections

INSPECTION DATE	NARRATIVE	DATA SOURCE
11/28/2012	I OBSERVED APPROXIMATELY 500 WASTE TIRES,100 CUBIC YARDS OF LANDSCAPE WASTE, AND APPROXIMATELY 1,000 CUBIC YARDS OF MIXED WASTE THAT APPEARED TO CONSISTS OF TIRES,PLASTICS,METAL,AND GENERAL LITTER-THE COMPOSITION OF MATERIAL IN THE PILES WERE NOT CLEARLY VISIBLE DUE TO THE LOT BEING FENCED AND THE DISTANCE BETWEEN THAT I TOOK THE PHOTOGRAPH FROM. THERE IS A OPENING IN THE FENCE ON THE SOUTHEAST PERIMETER OF THE SITE THAT APPEARED TO BE AN ACCESS POINT FOR THE DUMPING.THERE WAS ALSO APPROXIMATELY 200TIRES AND ABOUT 500 CUBIC YARDS OF CONSTRUCTION/DEMOLITION WASTE ON THE GROUND OUTSIDE OF THE LOT PERIMETER THAT MAY BE A MUNICIPAL ACCESS ROAD.I WILL FOLLOW-UP IN THIS INVESTIGATION BY SECURING A	DEPT. OF PUBLIC HEALTH

CDPH Environmental Inspections

Based on CDPH Environmental Inspections

CDPH Environmental Inspections

Based on CDPH Environmental Inspections

CDPH Environmental Inspections

Based on CDPH Environmental Inspections

CDPH Environmental Inspections

Based on CDPH Environmental Inspections

CDPH Environmental Inspections

Based on CDPH Environmental Inspections

TITLE REPORT TO IDENTIFY THE OWNER/OPERATOR OF THE SITE AND TAKE APPROPRIATE ENFORCEMENT ACTION AND PRECEDE WITH SITE CLEAN-UP.

ASTM E 1527-05 USER QUESTIONNAIRE
Page 1 of 2
Proposal No:

In order to qualify for one of the Landowner Liability Protections (LLPs) offered by the Small Business Relief and Brownfields Revitalization Act of 2001, the user must respond to the following questions. Failure to provide this information to the environmental professional may result in significant data gaps, which may limit our ability to identify recognized environmental conditions resulting in a determination that "all appropriate inquiry" is not complete. This form represents a type of interview and as such, the user has an obligation to answer all questions in good faith, to the extent of their actual knowledge.

Site Name: 650 W. 83rd St. Site Address: 650 W. 83rd St. Chicago IL

1) Are you aware of any environmental cleanup liens against the site that are filed or recorded under federal, tribal, state, or local law (40 CFR 312.25)? X No ___Yes If yes, please explain.

2) Are you aware of any activity and use limitations (AULs), such as engineering controls, land use restrictions, or institutional controls that are in place at the site and/or have been filed or recorded in a registry under federal, tribal, state, or local law (40 CFR 312.26)? X No ___Yes If yes, please explain.

3) As the user of this ESA, do you have any specialized knowledge or experience related to the site or nearby properties? For example, are you involved in the same line of business as the current or former occupants of the site or an adjoining property so that you would have specialized knowledge of the chemicals and processes used by this type of business (40 CFR 312-28)? X No ___Yes If yes, please explain.

4) Does the purchase price being paid for this site reasonably reflect the fair market value of the site (40 CFR 312.29)? X No ___Yes

If no, have you considered whether the lower purchase price is because contamination is known or believed to be present at the site (40 CFR 312.29)? ___No X Yes If yes, please explain.
Remediation will be needed

5) Are you aware of commonly known or reasonably ascertainable information about the site that would help the environmental professional to identify conditions indicative of releases or threatened releases (40 CFR 312.30)?
___No X Yes If yes, please explain.
Previous Phase I + II reports

6) As the user of this ESA, based on your knowledge and experience related to the site, are there any obvious indicators that point to the presence or likely presence of contamination at the site (40 CFR 312.31)? ___No
X Yes If yes, please explain.
previous Phase II reports

Request for Information and Documentation

In addition to the specific questions outlined above, the user is requested to provide the following information and documentation, as available. ASTM requires that this information, if available, be provided to the environmental professional prior to the site visit.

Please return this form with the signed and completed Agreement for Services.

ASTM E 1527-05 USER QUESTIONNAIRE
Page 2 of 2
Proposal No: P11130681

Item Supplied "X"	Not Applicable, Not Available or Not Known "X"	Item Requested (See Proposal)	Contacts/Comments or Indicate Attachment
X		Point of Contact for Access	Name/Phone:
X		Current Site Owner	Name/Phone:
X		Current Facility Operator	Name/Phone:
	X	Contacts for Prior Owners	Name/Phone:
	X	Contacts for Prior Occupants	Name/Phone:
	X	Access Restrictions	
	X	Notification of Special Requirements Regarding Confidentiality	
X		Legal Description and Diagram / Survey of Site	
	X	Chain of Title with Grantor/Grantee Summary (back to 1940 or first developed use)	
X		Reasons for Conducting ESA	

Helpful Documents Checklist
Pursuant to ASTM E 1527-05 § 10.8, do you know whether any of the following documents exist related to the subject property and, if so, whether copies can and will be provided to the environmental professional? Check all that apply.

- [X] Environmental site assessment reports
- [ ] Environmental compliance audit reports
- [ ] Geotechnical studies
- [ ] Reports regarding hydrogeologic conditions on the property or surrounding area
- [ ] Registrations for above or underground storage tanks
- [ ] Notices or other correspondence from any governmental agency relating to past or current violations of environmental laws with respect to the property or relating to environmental liens encumbering the property
- [ ] Registrations for underground injection systems
- [ ] Environmental permits/plans, solid waste permits, hazardous waste disposal permits, wastewater permits, NPDES permits, underground injection permits, SPCC plans

Sarah Rubin
Name (Authorized Client Representative)

Environmental Engineer III
Title

Signature

1/27/14
Date

Please return this form with the signed and completed Agreement for Services.

APPENDIX F

Photographs

Photo 1: View from the south side of the site facing north of the enclosure.

Photo 2: View from the south side of the site facing northwest of the construction trailer.

Photo 3: View from the southeast corner of the site facing northwest.

Photo 4: View of the solid waste dumpsters located in the northeast portion of the site.

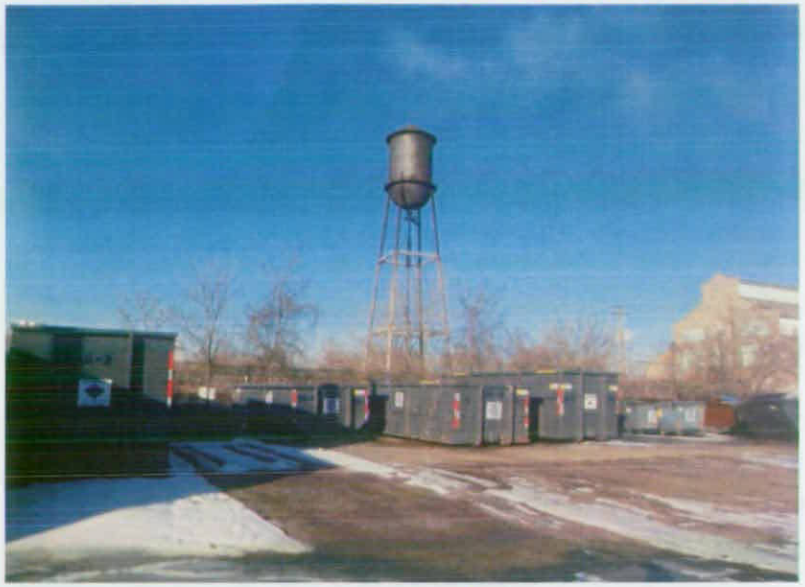

Photo 5: View of additional dumpsters located in the northeast portion of the site.

Photo 6: View of recycling dumpsters located in the northeast portion of the site.

Photo 7: View of additional recycling dumpsters located in the northeast portion of the site.

Photo 8: View of dumped dirt in the northwest portion of the site.

Photo 9: View of dumped dirt in the northwest portion of the site.

Photo 10: View from the northwest side of the site facing southeast through the enclosure.

Photo 11: View from the west side of the site facing east through the enclosure.

Photo 12: View from the southwest corner of the site facing northeast.

Photo 13: View of the south adjoining Look Up and Live Full Gospel Ministries.

Photo 14: View of the southeast adjoining park.

Photo 15: View of the east adjoining truck storage.

Photo 16: View of the north adjoining vacant structures.

APPENDIX G

Consultant Qualifications

RACHELLE K. CHRISTIAN, P.G.
SENIOR PROJECT MANAGER, ENVIRONMENTAL PROFESSIONAL

PROFESSIONAL EXPERIENCE

Mrs. Christian is an environmental geologist in Terracon's Dallas, Texas office. She has 17 years of experience in environmental consulting, and she has experience in performing all aspects of Phase I and Phase II site assessments and investigations, asbestos services, lead-based paint services and mold services, and has experience with ESA Department management.

Mrs. Christian is responsible for the management and overview of over 350 environmental site assessments per year and has participated in more than 2,000 Phase I projects. She has experience with projects ranging from agricultural, residential and commercial properties, to industrial manufacturing, EPA Brownfield sites, PST facilities, LPST facilities, RCRA hazardous waste generators, and oil and gas field properties.

Mrs. Christian has 14 years' experience in client interaction and marketing with numerous clients including private land owners, developers, local municipalities, major retail chains and large scale lending institutions. She is proficient in the coordination of site activities with local, state and federal regulatory agencies.

PROJECT EXPERIENCE

Transportation

High-Five TXDOT Development – Dallas, Texas
Project Manager for the High-Five TXDOT ESA at the intersection of I.H. 635 and U.S. 75 in Dallas, Texas.
Professional Services Completed: 2000
Construction Completed: May 2005
Construction Cost: $261,000,000
Terracon Fee: $15,000

DFW Connector Development – Grapevine, Texas
Project Manager and overview for the DFW Connector 56 ESAs at the interchange of S.H. 114 and S.H. 121 in Grapevine, Texas.
Professional Services Completed: 2010
Construction Completed: Ongoing
Terracon Fee: $62,370.

Public Entities

Brownfields Redevelopment
Project Manager for numerous downtown Dallas and Fort Worth ESAs, including sites for the American Airlines Center (AAC), as well as in Greenville and Arlington, Texas, and for West Central Texas Council of Governments (WCTCOG).
Professional Services Completed: 1999-2011

Education
Bachelor of Science, Geology, 1995, University of Texas at Arlington

Registrations
Licensed Professional Geoscientist, License No. 222, State of Texas, since March 2003

Certifications
EPA Accredited Asbestos Inspector since 1997

TDSHS Licensed Asbestos Inspector (License No. 60-1732)

TDSHS Lead Inspector and Risk Assessor Training Program (Certificate No. 00007)

TDSHS Licensed Lead Risk Assessor (License No. 2070466)

TDSHS Licensed Mold Assessment Technician (License No. MAT1059)

40-Hour OSHA Hazardous Waste Operations Training

University of Houston/TCEQ Texas Risk Reduction Program (TRRP) Modules 1 and 2

Affiliations
North Texas Association of Environmental Professionals, 2005-present

Society of Texas Environmental Professionals, 2007-present

Work History
Terracon Consultants, Senior Project Manager of ESA Services, 2006-present; Project Geologist, 1999-2006

HBC Engineering, Inc. – Dallas, TX, Project Geologist, 1995-1999

Terracon

Retail/Commercial/Financial/Telecommunication

ESA Portfolios
Project Manager for numerous ESAs conducted in conjunction with the acquisition of numerous convenience store/gasoline service stations, light industrial office/warehouses, apartment complexes, medical office buildings, agricultural facilities, and telecommunication tower sites, etc. in Texas and the U.S.
Professional Services Completed: 1996-2011

Ranch and Large-Scale Properties - Texas
Project Manager for ESAs on multiple ranch and large-scale properties ranging in size from 1,000 acres to 10,000 acres.
Professional Services Completed: 2009

Energy

Oil & Gas Due Diligence – Texas and New Mexico
Assisted in several Phase I ESAs on over 1,400 oil and gas well production locations and injection wells in Southwest Texas, West Texas and New Mexico. Duties included field reconnaissance, historical review, and reporting.
Professional Services Completed: 2009-2011

Wind Power
Project Manager for ESA on a proposed Wind Farm in King County, Texas. Duties included field reconnaissance of 12,000-acre ranch, oil/gas well field, historical review and reporting.
Professional Services Completed: October 2009
Terracon Fee: $24,500

Power Plants
Manager Overview for several ESAs on mothballed power plants in West Texas and Project Manager for several active power plants in Texas, New York and Massachusetts.
Professional Services Completed: 2007 and 2011

RICHARD O'BRIEN, P.E.

Program Manager / Point of Contact

PROFESSIONAL EXPERIENCE

Mr. O'Brien currently serves as a Senior Project Engineer for Environmental Services with services in Illinois. Richard O'Brien has over ten years of experience in managing and conducting environmental engineering, site remediation, and environmental site investigation projects. Directed complex, multi-year remediation projects from inception through completion, on time and budget. Duties have included managing staff, subcontractors, schedules, as well as tracking resources, justifying change orders, and ensuring all work is conducted in accordance to all applicable safety and regulatory requirements.

Mr. O'Brien has personally completed over 80 Phase I site investigations, including expanded-scope assessments incorporating NEPA criteria for federal building investigations. Mr. O'Brien is also experience in Phase II Environmental Site Assessments, geophysical surveys, UST removals, groundwater investigations, and site remediation.

PROJECT EXPERIENCE

City of Chicago, Department of Fleet & Facility Management (2FM)
Program/Project Manager, Kimball Park Phase I/II ESA
Mr. O'Brien performed duties as program manager for Terracon on the City of Chicago 2FM U.S. EPA Brownfield Grant Sites project, which included Kimball Park Phase I/II ESAs. Under the multiple-site task order, 2FM assigned to Terracon multiple groups of sites for initial Phase I Environmental Site Assessment services. Prepared EPA-approved Quality Assurance Project Plans (QAPPs) and property-specific Sampling and Analysis Plans (SAPs) to evaluate properties with potential impacts.

Program/Project Manager, Union Station Transit Center Phase II ESA
Directed reporting and remedial cost estimates for the Union Station CDOT Transit Center Phase II ESA conducted in conjunction with the Chicago Department of Transportation (CDOT). Responsible for budgeting, staff and Chicago 2FM contact.

Program/Project Manager, 59th & Ada Phase I/II ESA
Created a site-specific sampling plan based on identified RECs identified in Terracon's Phase I ESA and directed field work and reporting for the former smelter/junk yard vacant site in the south side of Chicago. Responsible for all budgeting, staff and contractor scheduling, and coordinating with City's contact.

Program/Project Manager, Skinner Park
Directed field work and reporting for the Skinner Park site located at a former municipal building location on the near-west portion of Chicago; conducted LUST reporting, and enrolled site into IEPA's SRP program. Directed site investigations, groundwater modeling, and reporting. Responsible for full aspects.

Program/Project Manager, Emergency UST Removal Oversight & LUST Reporting

Education

Bachelor of Science, General Engineering, University of Illinois at Urbana-Champaign, 2001

Registrations

Illinois Licensed Professional Engineer, #062.059997

Certifications

40-Hour OSHA HAZWOPER

OSHA Confined Space Training, 2007

Green Engineering Technology City of Chicago Department of Environment, 2004

Affiliations

Illinois Society of Professional Engineers

Urban Land Institute

Work History

Terracon, Senior Project Engineer, Environmental Services, 2012-present

Carnow, Conibear & Assoc., Ltd. Project Manager, 2007-2012; Environmental Engineer, 2004-2007

Crawford, Murphy & Tilly, Airport Planner, 2001-2004

Directed LUST reporting for emergency UST removal oversight services at 1735 W. Garfield in Chicago, confirmation sampling, and LUST 20-day and 45-day reporting for McDonough Demolition at the request of Chicago Department of Fleet and Facility Management (2FM

Project Manager, Wabash Park; Ingleside Urban Garden
Managed Wabash Park and Ingleside Urban Garden sites through IEPA's SRP program, including directing site investigations, groundwater modeling, and reporting. Responsible for all budgeting, staff and contractor scheduling, and coordinating with regulators and owner's contact. Enrolls sites in the IEPA's Site Remediation Program. Assisted the City in obtaining draft NFR letters.

Project Engineer, Chicago Dept. of Transportation Fueling Facility
Managed the IEPA Stage 1, Stage 2, and Completion Reports concerning the three leaking USTs removed from the facility, IEMA # 20051703. Designed and managed the Stage 2 investigation to IEPA satisfaction. Prepared all paperwork to secure an NFR letter from the IEPA for all sites. Coordinated and completed IEPA LUST reimbursement activities on behalf of the City.

Village of Schaumburg, Illinois

Project Engineer, Former Murzyn-Anderson Property Mr. O'Brien serves as lead engineer overseeing this brownfield assessment/cleanup project. Terracon is assisting the Village with completing the site assessment under IEPA's Municipal Brownfields Redevelopment Grant (MBRG) and the Revolving Loan Fund (RLF) to implement the cleanup as appropriate. Conducted 95% UCL background calculations and was lead drafter of the Remedial Objectives and Remedial Action Plan for the IEPA Site Remediation Program (SRP) submission, which received the draft no further remediation letter from IEPA in 2012

City of South Beloit, Illinois Project Engineer, South Beloit Primecast Brownfield Mr. O'Brien serves as lead engineer on this brownfield assessment/cleanup project of the former foundry parcel. Terracon is assisting the City with completing the site assessment under IEPA's Municipal Brownfields Redevelopment Grant (MBRG) and the Revolving Loan Fund (RLF) to implement the cleanup as appropriate. Conducted 95% UCL background calculations and was lead drafter of the Remedial Objectives and Remedial Action Plan for the IEPA Site Remediation Program (SRP) submission, which received the draft no further remediation letter from IEPA in 2012.

Public Building Commission of Chicago
Project Manager, Whitney Young Library USEPA Grant Site
Mr. O'Brien is currently leading a project team that has assesed the existing Whitney Young Library facility and adjoining former retail properties, including a dry cleaner. Terracon designed a remedial scope of work, remedial drawings, and specifications utilizing in-situ chemical oxidation (ISCO) to assess chlorinated solvent impact to soil and groundwater. Assisted the client in their pursuit of IEPA Brownfield Revolving Loan Fund (RLF) and EPA Brownfield Grant opportunities. Pursuing closure via the IEPA Site Remediation Program (SRP).

McGrath RentCorp Mokena SRP
Directed field work and LUST, and SRP reporting for the Adler site located in Mokena, Illinois. Project work included a Phase I ESA, the removal of four USTs and subsurface site investigations by Terracon. Responsible for all budgeting, staff and contractor scheduling, and coordinating with regulators and owner's contact.

Grainco FS Ransom LUST Investigation and Reporting
Directed field work and LUST Stage I/II reporting for the Grainco FS site located in Ransom, Illinois. Work goals are to close the LUST incident for a gasoline tank removed in 1993. Responsible for all budgeting, staff and contractor scheduling, and coordinating with regulators and owner's contact.

Fortune Metal LLC Fortune SWPP Plan
Mr. O'Brien was the project manager and Professional Engineer for SWPP Plan development for an industrial facility for the client. Mr. O'Brien conducted the site visit, site research, signing as P.E., and project management.

LAUREN F. TRZASKUS
STAFF GEOLOGIST

PROFESSIONAL EXPERIENCE
Ms. Trzaskus is based in Terracon's Naperville, Illinois office. She is responsible for conducting Phase I Environmental Site Assessments (ESAs) for residential, commercial and industrial properties and field oversight and sampling. Her duties include preparing technical reports, data collection, client interaction, and site reconnaissance.

In addition, Ms. Trzaskus has experience in groundwater sampling, surface water sampling, stream cross-sections and soil classifications. She has assisted in the completion of several Phase I ESAs and has participated in multiple site visits/activities.

PROJECT EXPERIENCE

Illinois Valley Cellular – Central Illinois
Ms. Trzaskus performed two Phase I ESAs complete with National Environmental Policy Act (NEPA) Land Use Compliance Checklists for development of new telecommunication towers. Project specifics included coordination with the Federal Communications Commission (FCC), State Historic Preservation Agency (SHPO), the U.S. Fish & Wildlife Service (USFWS), Tribal Historic Preservation Officers (THPOs) for potentially interested Native American tribes, and an Illinois state licensed archaeologist.

Buchanan Energy – Northeastern Illinois and Northwestern Indiana
Ms. Trzaskus organized and managed a 10-site Phase I ESA portfolio consisted of fueling stations with convenience stores and car washes. Additional services conducted during the ESAs included a review of underground storage tank (UST) system compliance records.

CLMG Corp. – Chicago, Illinois
Ms. Trzaskus conducted a Phase I ESA of the 800,000 square foot former Zenith Radio plant, which was recently subdivided and occupied by various tenants including automotive repair, musician studios, granite polishing, and metal fabrication operations.

Cornerstone Services – Greater Kankakee Area, Illinois
Ms. Trzaskus conducted Environmental Checklists and Phase I ESAs of single-family rental housing and vacant land for the client's application for Illinois Housing Development Authority (IHDA) funding. Additional services conducted in conjunction with the Environmental Checklists included utilization of the U.S. Department of Housing and Urban Development (HUD) Assessment Tools for Ecological Compliance (ATEC) Day/Night Noise Level Calculator.

Crown Commercial Real Estate & Development – Chicago, Illinois
Ms. Trzaskus conducted a Phase I ESA of an approximate 15-acre parcel of vacant land that was historically developed with residential, commercial, and light industrial structures in the early 1900s. Historic on-site operations prompted a Limited Site Investigation (LSI) of the site.

Education
B.S., Environmental Geosciences, 2011, Northern Illinois University

B.S., Geography, 2011, Northern Illinois University

Certification
40-Hour HAZWOPER

Indiana State Licensed Asbestos Inspector

Michigan State Licensed Asbestos Inspector

Work History
Terracon Consultants, Inc., Naperville, Illinois, Staff Geologist, May 2014-present

Terracon Consultants, Inc., Naperville, Illinois, Field Geologist, April 2012-May 2014

McHenry County Government, Planning and Development, Division of Water Resources, Intern, Woodstock, Illinois, Winter 2012

Northern Illinois University, DeKalb, Illinois, Research Assistant, Summer / Fall 2011

Home First Illinois LLC c/o IFF – Chicago, Illinois
Ms. Trzaskus conducted 26 Environmental Checklists on multi-family housing units intended for rehabilitation or demolition under funding provided by the IHDA. Environmental checklists included a site inspection, review of applicable and required maps, photographic documentation, and review of noise assessment tools.

Dearborn Wholesale Grocers – Chicago, Illinois
Ms. Trzaskus provided field oversight during the investigation of a suspect UST system line located within a former grocery store. The subsurface investigation revealed the presence of two USTs. Ms. Trzaskus provided photographic documentation of the investigation, field notes, and continuous field screening of ambient air utilizing a photoionization detector (PID).

Wendler Engineering Services Inc. – Milledgeville, Illinois
Ms. Trzaskus conducted a Preliminary Environmental Site Assessment (PESA) of approximately 4-acres improved with agricultural barns and equipment storage intended for a highway relocation project. Additional services conducted in conjunction with the PESA included the completion of the U.S. Department of Agriculture (USDA) Farmland Conversion Impact Rating Form AD-1006 and coordination with project managers at the Illinois Department of Agriculture (ILDA).

ABRA, Inc. – Northeastern Illinois and Northwestern Indiana
Ms. Trzaskus aided in the completion of 24 Phase I ESAs conducted on automotive body and glass repair facilities. Findings of the ESAs prompted LSIs on seven facilities. Ms. Trzaskus provided field oversight during the subsurface investigations, including soil and groundwater sampling.

JPMorgan Chase, N.A. – Elkhart, Indiana
Ms. Trzaskus conducted a Phase I ESA on a former metal fabrication facility. Additional services conducted in conjunction with the ESA included the sample collection of 15 suspect asbestos-containing materials (ACMs) and submittal for laboratory analysis.

JPMorgan Chase, N.A. – Wilmette, Illinois
Ms. Trzaskus conducted a Phase I ESA on a three-story office building occupied by a Chase Bank facility and two floors of office space. Historic on-site drycleaning operations, Chinese laundries, and automotive repair and painting operations prompted a LSI of the site. Ms. Trzaskus conducted soil and groundwater sampling in six borings. Analytical results identified contamination of tetrachloroethylene (PCE) and trichloroethane (TCE) in soil samples associated with the historic drycleaner.

Ronald McDonald House Charities – Winfield, Illinois
Ms. Trzaskus conducted soil sampling on an approximate 2,000 cubic yard stockpile of soil excavated during demolition activities. Soil samples were submitted for laboratory analysis and potential certification/disposal at a Clean Construction and Demolition Debris (CCDD) landfill.

United States Environmental Protection Agency Brownfields Cleanup Grant – South Beloit, Illinois
Ms. Trzaskus aided in the preparation and completion of a USEPA Brownfields Grant for the City of South Beloit. The USEPA selected the City of South Beloit for hazardous substances and petroleum grant funds that will be utilized in the cleanup of the "Corner Parcel" and "Foundry Parcel," a tract of vacant land historically developed with two gasoline service stations and historic structures associated with the former Beloit Foundry operations. Ms. Trzaskus conducted research including history and demographics of South Beloit, as well as prepared the grant for submittal to the USEPA.

ABF Freight – Northern, Central, and Western Michigan
Ms. Trzaskus conducted three compliance and site investigations of ABF facilities in Michigan. ABF operates trucking terminals and were identified as potential sources of industrial storm water. Ms. Trzaskus conducted visual inspections of the properties, including photographic documentation and interviews, a review of compliance documents (i.e. permits, plans, etc.) and assisted in the completion of compliance checklists to document site deficiencies.

FILE COPY

15-59594

0316715228 – Cook
Chicago/Dept. of Fleet & Facility Mgmt.
SR/Tech

Comprehensive Site Investigation Report, Remediation Objectives Report, and Remedial Action Plan

0316715228—Cook County
650 West 83rd Street
Chicago, Cook County, Illinois
PINs: 20-33-119-024
20-33-124-001
20-33-124-002
Terracon Project No: A2157000

RECEIVED
JUN 01 2015
IEPA/BOL

May 29, 2015

Prepared for:
City of Chicago, Department of Fleet and Facility Management
Chicago, Illinois

IEPA - DIVISION OF RECORDS MANAGEMENT
RELEASABLE
JUN 08 2015
REVIEWER MED

Prepared by:
Terracon Consultants, Inc.
Chicago, Illinois

Terracon

May 29, 2015

Illinois Environmental Protection Agency
Bureau of Land
Remedial Project Management Section
Site Remediation Program
1021 North Grand Avenue East
P.O. Box 19276
Springfield, Illinois 62794-9276

Attn: Mr. Tim Murphy

Re: Comprehensive Site Investigation Report, Remediation Objectives Report, and Remedial Action Plan
0316715228—Cook County
650 W. 83rd Street, Chicago, Illinois
Terracon Project No.: A2157000, 2FM TOR No.: 14-2FMEHS-00020

Dear Mr. Murphy:

Terracon Consultants, Inc. (Terracon) is pleased to submit this Comprehensive Site Investigation Report, Remediation Objectives Report, and Remedial Action Plan (CSI/ROR/RAP) for the remediation site located at 650 W. 83rd Street Chicago, Illinois. This work was conducted on behalf of the City of Chicago Department of Fleet and Facility Management (2FM). Throughout the report, the section headers reference the corresponding rule sections in Title 35 Illinois Administrative Code.

Sincerely,
Terracon Consultants, Inc.

Shweta Mehta
Environmental Engineer

Matt A. Catlin, P.E.
Senior Principal

Richard O'Brien, P.E.
Senior Project Engineer

Copies to: Addressee (2)
Sarah Rubin, CHMM, 2FM

IEPA - DIVISION OF RECORDS MANAGEMENT
RELEASABLE
JUN 08 2015
REVIEWER MED

Terracon Consultants, Inc. 650 West Lake Street, Suite 420, Chicago, Illinois 60661
P [312] 575 0014 F [312] 575 0111 terracon.com

1.0 SITE INVESTIGATION [740.425] 1
1.1 Executive Summary [740.425(b)(1)] 1
1.1.1 Objective 1
1.1.2 Technical Approach 2
1.1.3 Recognized Environmental Conditions 2
1.1.4 Limitations 3
2.0 SITE CHARACTERIZATION [740.425(B)(2)] 4
2.1 Sources Consulted [740.425(b)(2)(A)] 4
2.2 Site History [740.425(b)(2)(B)] 4
2.2.1 Historical Environmental Investigations 5
2.3 Physical Setting [740.425(b)(2)(C)] 6
2.3.1 Regional Location 6
2.3.2 Regional and Site Geology/Hydrogeology 6
2.3.3 Surface Water Investigation 8
2.3.4 Wetlands Investigation 8
2.3.5 Flood Plain 8
2.3.6 Migration Pathways and Exposure Routes 8
2.3.7 Site Base Map(s) [740.425(b)(2)(D)] 8
2.3.8 Legal Description [740.425(b)(2)(E)] 9
3.0 SITE INVESTIGATION 10
3.1 Site-Specific Sampling Plan [740.425(b)(3)] 10
3.1.1 Soil Boring Investigation 12
3.1.2 Hydrogeological Investigation 13
3.1.3 Soil Gas Investigation 15
3.2 Analytical Results 17
3.2.1 Analytical Results for Soil Investigation 17
3.2.2 Analytical Results for Hydrogeologic Investigation 18
3.2.3 Analytical Results for Soil Gas Investigation 18
4.0 ENDANGERMENT ASSESSMENT [740.425(B)(5)] 19
4.1.1 RECs and Exposure Routes [740.425(b)(5)(A)] 19
4.1.2 De Minimis Conditions [740.425(b)(5)(B)] 19
4.1.3 Contaminants of Concern [740.425(b)(5)(C)] 19
4.1.4 Physical Features of the Site [740.425(b)(5)(D)] 19
4.1.5 Tier 1 Comparison [740.425(b)(5)(E)] 19
5.0 SITE INVESTIGATION CONCLUSION [740.425(B)(6)] 27
6.0 REMEDIATION OBJECTIVES [740.445] 28
6.1 Industrial/Commercial Ingestion 28
6.2 Industrial/Commercial Outdoor Inhalation 28
6.3 Industrial/Commercial Indoor Inhalation 29
6.4 Construction Worker Ingestion 29
6.5 Construction Worker Inhalation 29
6.6 Soil to Groundwater 30
6.7 Groundwater 31
7.0 TIER II ASSESSMENT 32
8.0 EXPOSURE ROUTE EXCLUSIONS 35
8.1 Requirements for All Exposure Routes [742.305] 35
8.2 Groundwater Ingestion Exposure Route [742.320] 38
8.2.1 Requirements of 742.300 and 742.305 [742.320(a)] 38
8.2.2 Free Product [742.320(b)] 38
8.2.3 Setback Zones and Recharge Areas [742.320(c)] 38
8.2.4 Ordinance [742.320(d)] 38
8.2.5 Protection of Setback Zones and Recharge Areas [742.320(e)] 38
8.2.6 Protection of Surface Water [742.320(f)] 39
9.0 REMEDIAL ACTION PLAN [740.450] 40
10.0 REMEDIAL TECHNOLOGIES SELECTED [740.450(C)] 40
10.1 In-situ Chemical treatment 40

10.2 Remedial Excavation 41
10.3 Engineered Barriers 41
10.4 Groundwater and Offsite Notification 42
11.0 CONFIRMATION SAMPLING PLAN [740.450(D)] 42
12.0 CURRENT AND POST-REMEDIATION LAND USE [740.450(E)] 43
13.0 OTHER REQUIREMENTS [740.450(F)] 43
14.0 CONCLUSIONS 44

EXHIBITS

Exhibit 1 – Topographic Vicinity Map
Exhibit 2 – Site Feature Map
Exhibit 3A – Boring Location Diagram
Exhibit 3B – Well and Groundwater Contour Diagram
Exhibit 4 – Industrial/Commercial Exceedances
Exhibit 5 – Construction Worker Inhalation Exceedances
Exhibit 6 – Construction Worker Ingestion Exceedances
Exhibit 7A – Soil Component to Groundwater Exceedances 1
Exhibit 7B – Soil Component to Groundwater Exceedances 2
Exhibit 7C – Soil Component to Groundwater Exceedances 3
Exhibit 8 – Hazardous Waste Lead and PNA Attenuation Exceedance Areas

TABLES

Table 1 – Soil Analytical Results - VOCs
Table 2 – Soil Analytical Results - SVOCs
Table 3 – Soil Analytical Results - Inorganics
Table 4 – Soil Analytical Results – pH-Specific Constituents
Table 5 – Soil Analytical Results - Pesticides/PCBs
Table 6 – Soil Analytical Results - Herbicides
Table 7 – Soil Analytical Results - SPLP/TCLP Inorganics
Table 8 – Groundwater Analytical Results
Table 9 – Soil Gas Analytical Results

APPENDICES

Appendix A – IEPA DRM-1 & DRM-2 Forms; SRP Enrollment Letter
Appendix B – Soil Boring & Monitoring Well Logs
Appendix C – Hydraulic Conductivity Information
Appendix D – Water Well Survey
Appendix E – Laboratory Analytical Report
Appendix F – City of Chicago Groundwater Ordinance
Appendix G – Tier II Calculations

35 IAC	Title 35 Illinois Administrative Code
AST	Aboveground Storage Tank
bgs	below ground surface
City	The City of Chicago
2FM	City of Chicago Department of Fleet & Facility Management
cm	centimeter(s)
C_{sat}	Soil Saturation Limit
CSIR	Comprehensive Site Investigation Report
CWS	Community Water Supply
ESA	Environmental Site Assessment
eV	electron-volt
f_{oc}	Organic Carbon Content
g	gram(s)
GRO	Groundwater Remediation Objective
IEPA	Illinois Environmental Protection Agency
IPCB	Illinois Pollution Control Board
ISGS	Illinois State Geological Survey
ISWS	Illinois State Water Survey
kg	kilogram(s)
L	liter(s)
mg	milligram(s)
mL	milliliter(s)
N/A	Not Applicable
NFR	No Further Remediation
OSFM	Office of the State Fire Marshal
PAH/ PNA	Polynuclear Aromatic Hydrocarbons
PCB	Polychlorinated Biphenyl
PID	Photoionization Detector
PIN	Property Index Number
ppm	part(s) per million
PVC	Polyvinyl Chloride
PWS	Public Water Supply
RA	Remedial Applicant
RACR	Remedial Action Completion Report
RAP	Remedial Action Plan
RCRA	Resource Conservation and Recovery Act
REC	Recognized Environmental Condition
RO	Remediation Objective
ROR	Remediation Objectives Report
sec	second(s)
SIR	Site Investigation Report
Soil Survey	Soil Survey of Cook County
SPLP	Synthetic Precipitation Leaching Procedure
SRO	Soil Remediation Objective
SSL	Soil Screening Level
SVOC	Semi-volatile Organic Compound
TACO	Tiered Approach to Corrective Action Objectives
TCL	Target Compound List
TCLP	Toxicity Characteristic Leaching Procedure
USEPA	United States Environmental Protection Agency
USGS	United States Geological Survey
UST	Underground Storage Tank
VOC	Volatile Organic Compound
yr	year(s)

COMPREHENSIVE SITE INVESTIGATION REPORT, REMEDIATION OBJECTIVES REPORT, AND REMEDIAL ACTION PLAN
LPC # 0316715228—Cook County
650 West 83rd Street
PINs: 20-33-119-024, 20-33-124-001, 20-33-124-002
Terracon Project No: A2157000
May 29, 2015

1.0 SITE INVESTIGATION [740.425]

1.1 Executive Summary [740.425(b)(1)]

1.1.1 Objective

The objective of the site investigation was to identify Recognized Environmental Conditions (RECs) and related Contaminants of Concern (COCs) at 650 West 83rd Street, Chicago, Illinois (the site). The City of Chicago Department of Fleet and Facility Management (2FM), as the owner and Remedial Applicant (RA), intends to seek a Comprehensive No Further Remediation (NFR) letter for Industrial/Commercial use in accordance with 35 Illinois Administrative Code (IAC) Part 740: *Site Remediation Program (SRP)*.

The site is approximately nine acres in size and consists of vacant fenced land that is located at the northwest corner of South Wallace Street and West 83rd Street and east of the Rock Island District Metra Rail line. The site was developed and operated as an International Harvester industrial site from approximately the early 1900s through the 1920s. By 1962, the City of Chicago began using the vacant site as an automobile impound lot until 2009. Since 2009 the site has been vacant land used for temporary landscape waste storage by the City. Terracon previously completed a Phase I Environmental Site Assessment (ESA) dated July 2, 2013, a Phase II ESA for the site dated August 5, 2013, and a follow-up Phase II ESA dated October 28, 2013. Terracon completed an updated Phase I ESA report dated May 1, 2015. The Phase I and II ESA findings were incorporated into this report.

The City of Chicago is the current owner of the site. The City is planning to sell the property to an entity that will redevelop the site. The city enrolled the site into the Illinois Environmental Protection Agency's (IEPA) Site Remediation Program, which was acknowledged by the IEPA in a letter dated February 9, 2015. Terracon was contracted by 2FM in January 2015 to update and complete the SRP investigations using the current versions of the regulatory guidance. IEPA SRP DRM-1, DRM-2 forms and the SRP enrollment letter are presented in Appendix A.

1.1.2 Technical Approach

Terracon was contracted by 2FM in 2014 to conduct an updated Phase I ESA and Comprehensive Site Investigation (CSI) for the site. The updated Phase I ESA included the review of previous Phase I and Phase II ESAs Terracon investigations (detailed in Section 2.2.1). In addition to the new data generated by Terracon, the prior Phase II ESA investigation analytical data was transcribed into new tables to compare against current industrial/commercial remediation objectives. Terracon's updated Phase I was dated May 1, 2015 (Terracon Project No.: A2157000). A copy of this report is provided under separate cover to the IEPA and is included within the attached DRM-2.

The Phase I was conducted in accordance with ASTM E1527-13: *Standard Practice for Environmental Site Assessments: Phase I Environmental Site Assessment Process* and 35 IAC Part 740.420(a). RECs for the site were identified in the Phase I ESA, which are described below. The identified RECs provided the basis for the intrusive investigation.

1.1.3 Recognized Environmental Conditions

The Phase I ESA updated May 1, 2015 revealed evidence of the following on-site RECs:

- Previous investigations conducted in 2013 identified volatile organic compounds (VOCs) semi-volatile organic compounds (SVOCs) and metals at elevated concentrations in the site soil and groundwater. Lead was identified above the Toxicity Characteristic Leaching Procedure (TCLP) hazardous thresholds, and the natural attenuation threshold for organic contaminants was exceeded for soil.
- Potential for wood preservative (such as coal tar/creosote) application and storage to have caused releases in association with lumber stockpiles and rail spurs on site;
- Potential lead-based paint releases from the paint storage structure.
- The potential presence of unknown underground storage tanks (USTs) on the site based on historical industrial operations;
- The potential for releases of petroleum products from impounded automobiles stored on site from at least 1962 through 2009;
- SPILLS No. NL860889 based on the unknown content, extent, and location of the release;
- The historical benzene USTs and paint storage areas in the northwest corner of the site in 1910 and 1924 Sanborn maps. (Updated Phase I ESA removed this REC based on 2013 Phase II investigation results with no VOC detections in this area.)
- Impacted urban fill was verified to be on-site during 2013 subsurface investigations.

This assessment revealed evidence of the following off-site RECs:

- Leaking UST (LUST) No. 913213 (associated with east adjacent 8201 South Wallace Street) based on the absence of documented remediation activities and close proximity to the site;
- The USTs registered to 8201 South Wallace Street based on unknown status and close proximity to the site.

The site topographic vicinity map is depicted in Exhibit 1. Exhibit 2 depicts the site features, and Exhibit 3A shows the sample locations referenced in this report.

1.1.4 Limitations

Terracon's services were performed in a manner consistent with generally accepted practices of the profession undertaken in similar studies in the same geographical area during the same time. Terracon makes no warranties, either express or implied, regarding the findings, conclusions, or recommendations. Please note that Terracon does not warrant the work of laboratories, regulatory agencies, or other third parties supplying information used in the preparation of the report.

Findings, conclusions, and recommendations resulting from these services are based upon information derived from the on-site activities and other services performed under this scope of work; such information is subject to change over time. Certain indicators of the presence of hazardous substances, petroleum products, or other constituents may have been latent, inaccessible, unobservable, non-detectable, or not present during these services. We cannot represent that the site contains no hazardous substances, toxic materials, petroleum products, or other latent conditions beyond those identified during this investigation. Subsurface conditions may vary from those encountered at specific borings or wells or during other surveys, tests, assessments, investigations, or exploratory services. The data, interpretations, findings, and our recommendations are based solely upon data obtained at the time and within the scope of these services.

2.0 SITE CHARACTERIZATION [740.425(B)(2)]

2.1 Sources Consulted [740.425(b)(2)(A)]

Terracon used the following reference documents in completing the site investigation:

- Phase I Environmental Site Assessment
  650 West 83rd Street, Chicago, Illinois
  Prepared by: Terracon Consultants Inc.
  Dated: July 2, 2013
- Phase II Environmental Site Assessment
  650 West 83rd Street, Chicago, Illinois
  Prepared by: Terracon Consultants Inc.
  Dated: August 5, 2013
- Follow-Up Phase II Environmental Site Assessment
  650 West 83rd Street, Chicago, Illinois
  Prepared by: Terracon Consultants Inc.
  Dated: October 28, 2013
- Phase I Environmental Site Assessment
  650 West 83rd Street, Chicago, Illinois
  Prepared by: Terracon Consultants Inc.
  Dated: May 1, 2015

2.2 Site History [740.425(b)(2)(B)]

- The site consists of an approximate 9-acre parcel of vacant land located at the northwest corner of South Wallace Street and West 83rd Street in Chicago, Cook County, Illinois (Cook County Permanent Index Numbers [PINs]: 20-33-119-024, 20-33-124-001, and 20-33-124-002).
- The site consisted of undeveloped land in 1897 and unspecified "stock storage" and lumber storage associated with the International Harvester Company from approximately 1910 through 1924. Three 12,000-gallon USTs containing benzene and linseed oil were identified adjacent to a paint storage structure on the northwest corner of the site. USTs were identified in the 1910 and 1924 Sanborn maps and the paint storage structure was identified through 1975. The site was used as an impounded automobile storage yard from at least 1962 through 2009. The northeast corner of the site was developed with a warehouse structure from 1910 through at least 1964.
- Currently, the site is bordered to the north by vacant structures located at 601 West 81st Street; to the east by South Wallace Street followed by 8149 South Wallace Street

(Diamond Waste & Recycling) and truck trailer parking; to the south by South West 83rd Street, a community park, Self-Storage, Inc. (8316 South Birkhoff Avenue), and Look Up and Live Full Gospel Ministries (661 West 83rd Street); and, to the west by a Metra elevated rail line. Industrial and fuel storage facilities of various types have been located to the north, east and south of the site in various forms from at least 1897 through the present, and the potential for releases from these facilities to have impacted the site represents a REC to the site. Regulatory records are further discussed below.

- Visual observations of the site during the site reconnaissance performed on January 27, 2015 noted fly dumping, including dirt and concrete cylinders in the southeast and northwest portions of the site. Numerous solid waste and recycling dumpsters associated with the east-adjacent business were observed in the northeast portion of the site, on the exterior of the locked fence enclosure. Follow-up observations noted wood chips throughout the eastern half of the site from the city's landscape storage activities on the site.

2.2.1 Historical Environmental Investigations

Phase I ESAs conducted by Terracon in 2013 and 2015 identified potential releases (associated with former on-site lumber stockpiles, paint storage, impounded automobiles, SPILLS listing, and miscellaneous dumped materials), the presence and potential releases associated with three 12,000-gallon benzene and linseed oil USTs, potential presence of unknown USTs, and the potential for impacts from north, east, and south adjoining properties as RECs to the site.

Terracon conducted a Phase II ESA to establish the presence or absence of impacts to the site associated with the RECs identified in Terracon's 2013 Phase I ESA between June 25 and June 28, 2013. Terracon advanced 37 soil borings throughout the site and converted three borings to monitoring wells to collect soil and groundwater samples. This work was done in accordance with a Task Order Request TOR 13-2FMBEM-00005 dated April 30, 2013. The follow-up Phase II ESA was conducted to further investigate impacts identified by the previous investigation. Between September 26 and September 27, 2013, Terracon advanced an additional 40 soil borings at the site to depths of 4 to 16 feet below ground surface (bgs), and installed one groundwater monitoring well. An additional 13 soil borings were advanced at the site on October 23, 2013, to collect soil samples to help delineate the south extent of hazardous impacts on the western portion of the site. Details and findings of the Phase II ESAs are incorporated within this SRP investigation. The field sampling, drilling and screening methods and procedures used during the 2013 work by Terracon were the same as described in this report.

Exhibit 2 depicts the location of the site features, and Exhibit 3A shows the sample locations referenced in this report.

2.3 Physical Setting [740.425(b)(2)(C)]

2.3.1 Regional Location

The site is located within the northwest 1/4 of Section 33, Township 38 North, Range 14 East of the third principal meridian, Cook County, Illinois. PINs 20-33-119-024, 20-33-124-001, 20-33-124-002 were identified for the site by the client.

Adjacent property locations and land uses:

Adjoining North	Vacant structures (601 West 81st Street).
Adjoining South	East-west oriented West 83rd Street followed by Look Up and Live Gospel Ministries (661 West 83rd Street), athletic field and Self-Storage Inc. (8316 South Birkhoff Avenue).
Adjoining East	North-south oriented South Wallace Street followed Diamond Waste & Recycling (8149 South Wallace Street) and truck parking lot.
Adjoining West	North-south oriented elevated Metra railroad tracks with residential properties beyond.

2.3.2 Regional and Site Geology/Hydrogeology

Topography*		
Site Elevation	Approximately 600 feet above National Geodetic Vertical Datum (NGVD).	Blue Island, Illinois USGS Topographic Map, Dated 1997.
Surface Runoff/ Topographic Gradient	Regionally topographic gradient generally slopes to the northeast. Local runoff is carried by the municipal storm water system.	

*Please refer to Exhibit 1 for an excerpt of the topographic map.

Geology/Hydrogeology		
Formation:	Dolomites and limestones of the Silurian-Devonian age lying beneath upper-Devonian shales, Mississippian rocks or Quaternary deposits.	USGS Hydraulic Investigations Atlas 730-K, Dated 1995
Hydrogeologic Gradient:	Based on results from the Follow-Up Phase II report, groundwater flows from the northwest to the southeast portion of the site.	Terracon site investigations – June 25 through October 23, 2013.
Soils:	Subsurface consists of approximately 4–8 feet of fill material underlain by 1 to 5 feet of sand. Below the sand, gray silty clay with trace sand and gravel was encountered to at least 24 feet bgs.	Terracon site investigations – June 25 through October 23, 2013.

Geology/Hydrogeology		
Primary Aquifer	Surficial deposits generally less than 100 feet thick. The occurrence of sand and gravel aquifers difficult to locate.	USGS Hydraulic Investigations Atlas 730-K, Dated 1995
Estimated depth to first occurrence of groundwater	Within approximately three to seven feet bgs on-site.	Terracon site investigations – June 25 through October 23, 2013.

Hydrogeology

During the June and July 2013 investigation, Terracon installed monitoring wells MW-5, MW-10, and MW-34 to collect groundwater samples and to evaluate hydrogeology at the remediation site. The depth to water level was measured by lowering an electric water tape into each well casing. The electric water tape broadcasted an audible signal upon reaching the water table. Once contact with the groundwater was established, the measurement on the tape at the reference point (top of the well casing) was recorded to the nearest 0.01 foot. Groundwater was observed in MW-5, MW-10, and MW-34 at 6.90 feet bgs, 7.21 feet bgs, and 6.39 feet bgs, respectively. On July 3, 2013, Terracon conducted slug test in MW-5 (a drilled 2-inch diameter well) to determine the hydraulic conductivity of the site aquifer as part of the groundwater classification in accordance with 35 IAC 620. The hydraulic conductivity results were 2.7×10^{-3} cm/second. The hydraulic conductivity indicates a Class I Groundwater designation. Additional detail on the hydrological investigation activities is provided in **Section 3.1.2**.

Potable Water Supply and Well Survey

Potable water is supplied to the site via a public municipal water supply from the City of Chicago. The City of Chicago has an ordinance prohibiting the use of potable water wells within City limits, and the site is located more than two miles from the nearest municipal boundary line.

A water well report for the property was generated for the property using the IEPA's Source Water Assessment Program ArcIMS mapping Tool Program. The water well report searches the following data bases: USEPA Public Water System, United States Geologic Survey (USGS) National Water Well Inventory Data, Illinois Geological Survey Water Well records, Illinois State Water Survey (ISWS) Private Well Database and Public, Industrial and Commercial Survey, and the Illinois EPA's Water Well Location Information. Based on our review, the site is not located within the setback zone of the identified wells. Well search information is provided within Appendix D.

2.3.3 Surface Water Investigation

Surface water bodies were not located at the site or in the immediate vicinity. A small pond in Auburn Park is located 2,500 feet northeast of the site; Lake Michigan is located more than five miles to the east.

2.3.4 Wetlands Investigation

Terracon referenced U.S. Fish and Wildlife Service (FWS) National Wetland Inventory (NWI) maps and looked for visual indicators to determine the likely presence or absence of regulated wetlands on the site. The FWS NWI maps did not indicate the presence of regulated wetlands potentially on the site. Terracon's site reconnaissance did not identify potential wetland areas onsite or in the immediate surrounding area.

2.3.5 Flood Plain

Terracon accessed the Federal Emergency Management Agency (FEMA) Flood Insurance Rate Map (FIRM) website. Based on the FIRM Map Number 17031C0635J, community ED 17031C, the site panel was "not printed." The site is not located within a mapped flood plain.

2.3.6 Migration Pathways and Exposure Routes

The Remedial Applicant is seeking an NFR letter conditioned on industrial/commercial land use. As such, the following are the applicable exposure routes for evaluation.

- Industrial/Commercial Ingestion
- Industrial/Commercial Outdoor Inhalation
- Industrial/Commercial Indoor Inhalation
- Construction Worker Ingestion
- Construction Worker Inhalation
- Soil Component of the Class I Groundwater Ingestion Route
- Class I Groundwater Ingestion

Current and Post-Remediation Land Use

Currently, the subject property is vacant land. The City of Chicago is considering selling the property to a developer for redevelopment.

2.3.7 Site Base Map(s) [740.425(b)(2)(D)]

A Site Base Map is provided with DRM-1 form in Appendix A. Additional site features are depicted in Exhibits 1 and 2.

2.3.8 Legal Description [740.425(b)(2)(E)]

The Property Identification Numbers (PINs) for the subject property include:

- 20-33-119-024
- 20-33-124-001
- 20-33-124-002

The legal description for the subject property will be provided in the upcoming Remedial Action Completion Report (RACR).

3.0 SITE INVESTIGATION

3.1 Site-Specific Sampling Plan [740.425(b)(3)]

Terracon developed the sample locations and general approach to the investigation in response to findings of the Phase I ESA. In general, Terracon placed sample locations in areas to characterize the site and/or in areas near identified RECs. Exhibit 2 depicts the approximate location of features that were present during the Phase I ESA site reconnaissance. Based on findings from the first subsurface investigation, additional subsurface investigation was conducted to delineate impacts and meet requirements for a CSI. Sampling plans with sample justification were prepared for 2FM review prior to each mobilization, which are provided with the attached tables.

The following site investigation activities were conducted:

- Between June 25 and June 28, 2013, Terracon advanced 37 soil borings (B-1 through B-37) throughout the site. Thirty-five of the soil borings were advanced to a depth of 16 feet bgs and two soil borings were advanced to a depth of 24 feet bgs. One near-surface (1-3' bgs) and one deeper subsurface sample was collected from each boring. A total of 74 soil samples were collected, and 70 of the soil samples were submitted for laboratory analysis. Three soil borings were converted to temporary groundwater monitoring wells (denoted as MW-5, MW-10 and MW-34) to allow for groundwater sample collection and to obtain hydrogeological investigation.

- Between September 26 and September 27, 2013, Terracon conducted a follow-up Phase II ESA to further investigate impacts identified in previous investigation, which included hazardous waste concentrations of lead, polynuclear aromatic hydrocarbons (PNAs) exceeding the default subsurface attenuation capacity, and other Tier 1 RO exceedances. Terracon advanced 40 soil borings (with a "B-100," "B," or "VD" series designation) at the site to depths of 4 to 16 feet bgs. An additional 13 soil borings were advanced at the site on October 23, 2013, to collect additional soil samples from depth and help delineate the south extent of hazardous impacts on the western portion of the site. Soil samples were collected 20 feet in each cardinal direction from previous borings noted with hazardous waste levels of lead or natural attenuation exceedances. Additional samples were collected 40 feet in each cardinal direction from the previously-identified impacted boring locations and placed on hold pending initial analytical results. A total of 75 soil samples were collected, with 52 soil samples submitted for laboratory analysis. One new temporary monitoring well (denoted as MW-122) was installed and sampled to characterize groundwater in the southwestern portion of the site.

- The 2013 follow-up Phase II ESA included advancement of four soil gas borings in locations immediately adjacent to B-16, where elevated concentrations of VOCs were identified, and B-8, B-14 B-35, where the highest concentrations of naphthalene were identified.

- On February 20, 2015, Terracon advanced fourteen soil borings (B-201 through B-214) to further delineate impacts. Samples B-207 (6-8'), B-208 (6-8'), B-209 (6-8') and B-210 (6-8') were collected during the February 2015 investigation in an attempt to delineate the extent of attenuation impact west of soil boring B-104. Six soil samples, B-201(4-6'), B-202(4-6'), B-203(6-8'), B-204(4-6'), B-205(4-6') and B-206(4-6') were advanced surrounding previous boings B-3 and B-13 to further delineate. Additional samples were collected in areas where total inorganic impacts were previously identified above soil component ROs for further evaluation with Synthetic Precipitation Leaching Procedure (SPLP) analysis. (Due to the presence of newly placed landscaping piles, SPLP testing could not be completed near prior samples B-1, B-2 and B-36. These will be assessed when access is made available and results will be provided in the RACR.) One sample was collected from the area where the attenuation exceedances were identified for waste characterization parameters.

Exhibit 3A depicts the locations of these borings for all site investigations.

Quality Assurance Project Plan [740.425(b)(4)(B)]
Work was performed on this project in accordance with methodology described in this report. Terracon used these methods so that the information, data, and resulting decisions for the project are technically sound, statistically valid, and properly documented. STAT Analysis Corporation an IEPA-accredited laboratory (#100445) and Grace Labs (#100246) were used for chemical analyses. The laboratory performed the analytical tests in accordance with this accreditation, provided at the end of Appendix E.

Presentation of Data [740.425(b)(4)(C)]
The SRP regulations require that the data from the investigation be presented such that the information is organized and presented logically, and that relationships between the different investigations for each medium are apparent. Separate tables for soil, groundwater and soil gas analytical data are provided. Exhibits depict Tier 1 Soil Remediation Objective (SRO) exceedances for each applicable exposure route.

3.1.1 Soil Boring Investigation

Location of Underground Utilities

Before beginning subsurface investigation activities, Terracon contacted the DIGGER (the City of Chicago Utility Locate system) and requested location and markings of subsurface utilities.

Soil Boring Activities

Terracon conducted soil sampling from June 25 through June 28, 2013, and from September 26 through September 27 using Enviro-Dynamics, LLC to perform the direct-push (Geoprobe®) and drilling services as subcontractor to Terracon. Boring B-5 was rotary drilled after completion of the Geoprobe boring with a 7-inch diameter auger to install MW-5. Terracon conducted soil sampling on February 20, 2015 using Earth Solutions, Inc. to perform Geoprobe® services as subcontractor to Terracon. Samples were collected using a macro sampling tube lined with either a four or five foot acetate liner, depending on the samplers used. The Geoprobe method employs a pneumatic hammer to advance the macro sampling tube and acetate liner into the soil. The field investigation and sampling activities were performed under the direction of Terracon personnel who logged the lithology of the recovered material. The soil boring logs, presented in Appendix B, detail the subsurface lithology encountered during the investigation activities.

Field Screening

Terracon field screened the soil samples recovered from each soil boring for organic vapors using a photoionization detector (PID). This device provides a direct reading in parts per million (ppm) isobutylene equivalents and was calibrated daily using 100-ppm span gas in accordance with the manufacturer's recommendations. Upon removal of the sample liner from the borehole, Terracon sealed samples in two foot intervals of each core in a Ziploc® bag. After a brief stabilization period, Terracon screened the headspace above the soil in each bag using the PID equipped with an approximate 10 eV ultraviolet lamp source. The highest PID reading encountered was 36 ppm from B-15. Soil samples were collected and analyzed for volatiles from intervals coinciding with elevated PID readings. The soil boring logs in Appendix B summarize the PID screening results.

Soil Sample Collection and Handling

The soil samples were generally selected based on indications of environmental impact, as determined by elevated PID readings or visual and olfactory observations. Samples were collected from various depths appropriate to assess the RECs in the particular area. The VOC portions of the samples were field preserved immediately after collection using laboratory supplied pre-weighed vials containing the appropriate Method 5035 preservatives. The soil sampling equipment was cleaned with Alconox™ detergent and rinsed with deionized water

prior to commencing sampling as well as between each sampling point. Soil borings were backfilled with the soil boring cuttings and supplemented as needed with bentonite pellets.

Analytical Methods for Soil Investigation

Soil samples were analyzed for a combination of VOCs, benzene, toluene, ethylbenzene, and total xylenes (BTEX), SVOCs, PNAs, Pesticides/ polychlorinated biphenyls (PCBs), herbicides, IEPA Target Analyte List (TAL) metals, Resource Conservation and Recovery Act (RCRA) metals, organic carbon (f_{oc})[1], total petroleum hydrocarbons (TPH), TCLP metals, SPLP metals, hexavalent chromium, waste characterization parameters, and pH. A matrix preceding Table 1 presents a summary of the soil samples locations, depth intervals, and analyses.

Soil samples were placed in laboratory supplied glassware and transported on ice to the contract laboratories utilized under standard chain-of-custody procedures. Laboratory analytical results are discussed below.

3.1.2 Hydrogeological Investigation

Monitoring Well Construction

Terracon installed three temporary groundwater monitoring wells on June 25, 2013, in the northwest, northeast, and southeast portions of the site denoted as MW-5, MW-10 and MW-34, respectively. Temporary groundwater monitoring well MW-122 was installed on September 26, 2013, to assess the southwestern portion of the site. The temporary groundwater monitoring wells were constructed by installing a 1-inch diameter, Schedule 40 polyvinyl chloride (PVC), machine-slotted 10 foot well screen and riser sections from the bottom of the borehole to just above the ground surface. MW-5 was rotary drilled with a 7-inch-diameter auger immediately adjacent to boring B-5, and completed using a 2-inch diameter, 10-foot PVC well screen. Fine-grained sand filter pack was placed into each well's annulus from the bottom to approximately one to two feet above the screened section. A bentonite product (approximate ⅛-inch diameter chips) was placed in the annulus from above the filter pack to within two feet of the ground surface. The bentonite chips were hydrated with potable water. Each internal PVC casing was fitted with an expansion cap. The wells were developed to remove fines and entrained silts using new, dedicated, disposable bailers. To facilitate well development, the temporary wells were purged of at least 3 well volumes of water and allowed to recharge prior to sampling. The monitoring wells were left in place per the client's instruction to allow for future sampling or gauging as needed.

[1] *F_{oc} results not utilized due to widespread presence of deep fill on site with organic contamination.*

Water Level Measurements

Terracon measured the depth to water by lowering an electric water tape into each well casing. The electric water tape broadcasted an audible signal upon reaching the water table. Once contact with the groundwater was established, the observed measurement on the tape at the reference point (top of the well casing) was recorded to the nearest 0.01 foot. Groundwater was observed in MW-5, MW-10, and MW-34 at 6.90 feet bgs, 7.21 feet bgs, and 2.76 feet bgs, respectively on July 19, 2013. Exhibit 3B (Groundwater Elevation Diagram) depicts the resultant contours. The gradient was approximately 0.001 (measurement from MW-5 to MW-34) and flows toward the southeast. The following table presents the groundwater elevation data.

Table 3-1 Groundwater Elevation Data

Monitoring Well Number	Total Depth bgs (Ft)	Depth to Water (Ft) (07/19/2013)	Relative Groundwater Elevation (Ft)
MW-5	16	6.90	93.29
MW-10	16	7.21	92.81
MW-34	16	6.39	92.76

Notes:
MW-122 was installed after the groundwater survey so no relative elevation was established.
Benchmark: North side of top of concrete base of north light post, closest to north-central water tower.

Hydraulic Conductivity Testing

On July 3, 2013, Terracon mobilized to the site to conduct a slug test in MW-5 to determine the hydraulic conductivity of the site soil and help determine groundwater classification in accordance with 35 IAC 620. A Solinist 3001 Levelogger Mini LT transducer was placed in the well and connected to a laptop computer recorded water level and time. A pump was utilized for approximately 4 minutes, removing approximately 6 gallons of water and depressing the water level in the well about 1.25 feet. The groundwater returned to the initial elevation in approximately 6 minutes. Upon returning to the office, Terracon used the Bouwer-Rice[2] method implemented by Aqtesolv software to calculate the hydraulic conductivity of the formation. Appendix D contains software printouts of the results. The results found a hydraulic conductivity for the site of 2.7 X 10^{-3} cm/second. The hydraulic conductivity indicates a Class I Groundwater designation.

Groundwater Sample Collection and Handling

Groundwater samples were collected from MW-5, MW-10, and MW-34 on June 28 and July 19, 2013, and analyzed for a combination of VOCs, SVOCs, pesticides/PCBs, TAL inorganics, and pH. On September 26, 2013, groundwater samples from MW-5, MW-34, and MW-122 were collected for laboratory analysis for a combination of VOCs, SVOCs, pesticides/PCBs

[2] *Bouwer, H. and R.C. Rice, 1976. A slug test method for determining hydraulic conductivity of unconfined aquifers with completely or partially penetrating wells, Water Resources Research, vol. 12, no. 3, pp. 423-428.*

and TAL inorganics. The following table summarizes the groundwater samples, collection dates, and analyses.

Table 3-2 Groundwater Laboratory Analytical Methods

Sample Location	Sample Date	Analyses
MW-5	6/27/2013 & 7/19/2013	VOCs 8260B, SVOCs 8270C, Pesticides 8081B, PCBs 8082A, TAL Inorganics 6020/7470A, Herbicides 8321A
MW-10	6/27/2013 & 7/19/2013	VOCs 8260B, PNAs 8270C, RCRA Metals 6020/7470A
MW-34	6/27/2013 & 7/19/2013	VOCs 8260B, PNAs 8270C, RCRA Metals 6020/7470A
MW-112	9/26/2013	VOCs 8260B, SVOCs 8270C, Pesticides 8081B, PCBs 8082A, TAL Inorganics 6020/7470A

The groundwater samples were collected in the appropriate containers provided by the laboratory for each analytical procedure. Each sample was labeled with a unique identification after it was collected during field activities. The sample time, date, and location were also recorded on the sample containers in indelible ink. The samples were packed in coolers with ice for preservation. All the groundwater samples and proper chain-of-custody were then submitted to Grace Analytical Labs (IEPA Accreditation No. 100246) for analysis.

3.1.3 Soil Gas Investigation

Four soil gas borings were advanced in locations where elevated concentrations of volatile chemicals were identified during the June 2013 investigation using a Geoprobe®. Samples were collected per the sampling plan at a minimum sampling depth of 3 feet bgs and above the saturated zone.

For each soil gas boring, a dedicated soil vapor probe was installed which consisted of a ¼-inch diameter, stainless steel vapor point with Teflon tubing. A sand pack was placed from the base of the probe to 6-inches above the sampling point, and a bentonite product seal was installed from the top of the sand pack to the surface.

Prior to collecting samples for soil vapor, the soil gas ports were leak-tested. A stainless-steel shroud was placed over the surface of the sampling location and pressurized with laboratory-grade helium to evaluate the integrity of the sampling point seal. During shroud pressurization,

a helium detector was connected to the sample tubing to evaluate the concentrations of helium at the sampling point.

Subsequent to successful leak detection testing, the soil vapor ports were purged with the integral pump of the helium detector, and tested with the calibrated lower explosive limit (LEL) meter. The LEL meter measured 0% of the LEL. After purging, soil gas samples were collected using laboratory provided, batch certified Summa canisters under vacuum equipped with pre-calibrated 200 milliliters per minute (mL/min) regulators for laboratory analysis of VOCs using EPA Method TO-15. After sampling, the sampling ports were removed and the boreholes backfilled with a bentonite product.

After packaging each sample, Terracon recorded the sample collection start and stop time on each container label in permanent ink and placed the canisters in shipping container for transport to STAT Analysis Corporation of Chicago, IL under standard Chain-of-Custody procedures.

Soil Gas Sampling

On September 26, 2013, Terracon collected additional soil gas samples to further investigate the volatile chemicals identified in the June 2013 investigation. Soil gas samples were collected from the locations where the highest concentrations of volatile chemicals were noted. At prior soil boring locations B-8, B-14, and B-35, new soil probes were placed immediately adjacent and soil gas samples SG-8b, SG-14, and SG-35b were collected for laboratory analysis of naphthalene in accordance with the sampling plan. SG-16 was collected near previous sample B-16 and analyzed for VOCs and naphthalene. All samples were collected from 3 -4 feet bgs, except for SG-14, which was collected deeper at approximately 5 feet bgs, closer to elevated subsurface naphthalene impacts identified at 8-10' bgs.

The soil gas samples were collected in 6-liter, gas-tight, inert Summa canisters for each analytical procedure. Each sample was labeled by a unique identification number after it was collected during field activities, including the unique, laboratory-issued Summa canister identification number. The sample time, date, and location were also recorded on the sample containers in indelible ink. The samples were packed in coolers with ice for preservation. The soil samples and proper chain-of-custody were then submitted to STAT (IEPA Accreditation No. 100445) for analyses.

Soil gas concentrations were compared to the Tier 1 soil gas remediation objectives for the indoor inhalation exposure route – diffusion and advection (742 Appendix B, Table H). It should be noted that use of the Tier 1 Soil Gas ROs is predicated on use of an institutional control requiring future buildings to have a concrete slab and without sumps. The soil gas samples did not exceed the Soil Gas ROs.

Analytical Methods for Soil Vapor Investigation

USEPA analytical method TO-15 was used by the laboratory to analyze soil vapor samples for VOCs and naphthalene.

3.2 Analytical Results

3.2.1 Analytical Results for Soil Investigation

A Tier 1 evaluation was completed using the laboratory analytical results from Terracon's 2013 and 2015 investigations. The Tier 1 analysis compared the analytical results to the current IEPA Tiered Approach to Corrective Action Objectives (TACO) Tier 1 ROs for construction worker and industrial/commercial properties and the soil component for Class I groundwater. Results identified benzene, xylenes (total), benzo(a)anthracene, benzo(a)pyrene, benzo(b)fluoranthene, benzo(k)fluoranthene, chrysene, dibenzo(a,h)anthracene, indeno(1,2,3-c,d)pyrene, naphthalene, carbazole, arsenic, antimony, barium, chromium, lead, mercury and selenium above Tier I ROs. Table 4-1 details the COCs that exceeded Tier 1 SROs for the applicable exposure routes. Laboratory analytical results are presented in Appendix E. Soil sample results are provided in tabular form as Tables 1 through 7.

The presence of fill was noted to depth throughout the site. Subsurface fill in the north-central portion of the site was noted to have PNA contamination exceeding the default natural attenuation capacity for subsurface soil. Other nearby areas exceeded hazardous waste criteria for TCLP lead. F_{oc} results were analyzed but not utilized for site-specific calculations due to the pervasive presence of organic contamination.

Several samples indicated concentrations of inorganic constituents that are over the Chicago regional background concentrations, but are under Tier 1 SROs or the Tier 1 SRO is not established. Calcium, iron, magnesium, sodium and potassium were detected over background in several soil samples, but are considered nutrients in soil, and given the site setting, generally do not require further consideration.

Samples displaying the highest concentrations for specific chemicals at the site above regional background concentrations and outside of pH-specific Tier 1 RO range were analyzed by SPLP to determine if the maximum chemical concentrations would leach to groundwater at levels above the established Tier 1 groundwater remediation objectives (GROs) for Class I groundwater. B-211(6-8') was tested for SPLP lead; B-212(1-3') was tested for SPLP barium and selenium; B-213(1-3') was tested for SPLP aluminum, cobalt and nickel; B-213(4-6') was tested for SPLP antimony and iron; B-214(1-3') was tested for SPLP arsenic and selenium. All constituents tested for SPLP exhibited results below the applicable Tier 1 GROs for Class I groundwater, and do not require further consideration, with the exception of

lead in B-211(6-8') and antimony in B-213(4-6'). Additionally, due to access restriction, additional SPLP sampling to evaluate the soil component to groundwater exposure route will be planned to be conducted during remedial activities with results provided in the RACR. Additional information regarding evaluation of inorganic constituents over regional background concentrations can be found in **Section 6.6** of this report.

3.2.2 Analytical Results for Hydrogeologic Investigation

Groundwater analyses revealed the presence of aluminum, lead, iron, and manganese in the site groundwater at concentrations exceeding the Tier 1 GROs for Class I groundwater during the June 2013 investigation. The groundwater sample MW-122 collected in the follow-up investigation on September 26, 2013, in the southwestern portion of the site also exceeded the Class I GRO for aluminum, lead, iron, manganese and thallium. No exceedances of the indoor vapor intrusion ROs were noted in the groundwater samples. Groundwater wells MW-122, MW-5 and MW-34, were all sampled for pH upon client request, with pH results ranging from 6.74 to 7.03. Laboratory analytical results are presented in Appendix E. Sample results are provided in tabular form as Table 8.

3.2.3 Analytical Results for Soil Gas Investigation

Laboratory analytical results for the soil gas samples were compared to the inhalation exposure remediation objectives (ROs) for industrial/commercial properties, advection and dispersion, per 35 IAC 742 Appendix B, Table H. Sample results indicated that levels of the volatile chemicals are below their respective Tier 1 ROs. Laboratory analytical results are presented in Appendix E. Sample results are provided in tabular form as Table 9.

4.0 ENDANGERMENT ASSESSMENT [740.425(B)(5)]

4.1.1 RECs and Exposure Routes [740.425(b)(5)(A)]

Section 1.1.3 discusses the RECs associated with the remediation site. Section 2.3.6 discusses the applicable exposure routes for this site. Benzene, xylenes (total), PNAs, carbazole, arsenic, antimony, aluminum, iron, lead, manganese, mercury and thallium are present at concentrations that exceed the applicable Tier 1 ROs.

4.1.2 De Minimis Conditions [740.425(b)(5)(B)]

The Phase I ESA did not identify de minimis conditions.

4.1.3 Contaminants of Concern [740.425(b)(5)(C)]

The contaminants of concern investigated during the investigation were those on the TCL in 35 IAC Part 740, Appendix A as required for a CSI. Tables 1 through 9 summarize the concentrations of the contaminants of concern detected in the laboratory data sets. **Section 4.1.5** presents a summary of the sample locations where the concentrations of one or more contaminants exceeded the Tier 1 ROs.

4.1.4 Physical Features of the Site [740.425(b)(5)(D)]

Visual observations during the site reconnaissance identified fly dumping, including dirt and concrete cylinders, were observed in the southeast and northwest portions of the site. Numerous solid waste and recycling dumpsters were observed in the northeast portion of the site, on the exterior of the locked enclosure. Wood chips from the City's landscaping storage activities were noted on the eastern half of the site.

4.1.5 Tier 1 Comparison [740.425(b)(5)(E)]

Comparisons of the compounds evaluated to the TACO Tier 1 ROs are shown on Tables 1 through 9. Values exceeding the applicable ROs on Tables 1 through 9 are shaded. **Table 4-1** summarizes the compounds identified that exceed the Tier 1 ROs.

Table 4-1 Compounds Requiring Further Evaluation

Compound	Industrial/Commercial Occupants		Construction Workers		Groundwater Ingestion Route (Soil component and Direct)
	Ingestion	Inhalation	Ingestion	Inhalation	(Class I)
Benzene					B-16 (4-6')
Xylenes (total)				B-16 (4-6')**	
Benzo(a)anthracene	B-8 (1-3) B-8 (4-6) B-14 (6-8)* B-18 (1-3) B-26 (1-3) B-27 (1-3) B-35 (1-3) B-35 (4-6) B-103(6-8)* B-104(6-8)* B-105 (6-8) B-127 (1-3) B-130 (1-3) B-131 (1-3) B-132 (1-3) B-133 (1-3) B-208 (6-8)		B-14 (6-8)* B-103 (6-8)* B-104 (6-8)*		B-1 (1-3) B-3 (1-3) B-3 (4-6) B-5 (1-3) B-6 (1-3) B-7 (1-3) B-8 (1-3) B-8 (4-6) B-9 (4-6) B-14 (6-8)* B-15 (1-3) B-18 (1-3) B-20 (1-3) B-25 (1-3) B-25 (4-6) B-26 (1-3) B-27 (1-3) B-31 (1-3) B-34 (1-3) B-35 (1-3) B-35 (4-6) B-37 (1-3) B-103 (6-8)* B-104 (6-8)* B-105 (6-8) B-125 (1-3) B-127 (1-3) B-128 (1-3) B-129 (1-3) B-130 (1-3) B-131 (1-3) B-132 (1-3) B-132 (4-6) B-133 (1-3) B-207 (6-8) B-208 (6-8)
Benzo(a)pyrene	B-1 (1-3) B-3 (1-3) B-3 (4-6) B-5 (1-3) B-6 (1-3)		B-8 (1-3) B-8 (4-6) B-14 (6-8)* B-26 (1-3) B-35 (1-3)		B-8 (1-3) B-8 (4-6) B-14 (6-8)* B-15 (1-3) B-18 (1-3)

Compound	Industrial/Commercial Occupants		Construction Workers		Groundwater Ingestion Route (Soil component and Direct)
	Ingestion	Inhalation	Ingestion	Inhalation	(Class I)
Benzo(a)pyrene Continued	B-7 (1-3) B-8 (1-3) B-8 (4-6) B-9 (4-6) B-14 (6-8)* B-15 (1-3) B-18 (1-3) B-19 (1-3) B-20 (1-3) B-25 (1-3) B-25 (4-6) B-26 (1-3) B-27 (1-3) B-29 (1-3) B-31 (1-3) B-32 (1-3) B-33 (4-6) B-34 (1-3) B-35 (1-3) B-35 (4-6) B-37 (1-3) B-37 (6-8) B-101 (6-8) B-103(6-8)* B-104(6-8)* B-105 (6-8) B-122 (1-3) B-125 (1-3) B-127 (1-3) B-128 (1-3) B-129 (1-3) B-130 (1-3) B-131 (1-3) B-132 (1-3) B-132 (4-6) B-133 (1-3) B-207 (6-8) B-208 (6-8)		B-35 (4-6) B-103 (6-8)* B-104 (6-8)* B-105 (6-8) B-133 (1-3) B-208 (6-8)		B-26 (1-3) B-27 (1-3) B-35 (1-3) B-35 (4-6) B-103 (6-8)* B-104 (6-8)* B-105 (6-8) B-127 (1-3) B-130 (1-3) B-131 (1-3) B-132 (1-3) B-133 (1-3) B-208 (6-8)
Benzo(b)fluoranthene	B-8 (1-3) B-8 (4-6) B-14 (6-8)* B-15 (1-3) B-18 (1-3) B-26 (1-3)		B-103 (6-8)* B-104 (6-8)*		B-8 (1-3) B-8 (4-6) B-9 (4-6) B-14 (6-8)* B-15 (1-3) B-18 (1-3)

Compound	Industrial/Commercial Occupants		Construction Workers		Groundwater Ingestion Route (Soil component and Direct)
	Ingestion	Inhalation	Ingestion	Inhalation	(Class I)
Benzo(b)fluoranthene Continued	B-35 (1-3) B-35 (4-6) B-103(6-8)* B-104(6-8)* B-105 (6-8) B-127 (1-3) B-130 (1-3) B-133 (1-3) B-208 (6-8)				B-26 (1-3) B-27 (1-3) B-35 (1-3) B-35 (4-6) B-37 (1-3) B-103 (6-8)* B-104 (6-8)* B-105 (6-8) B-127 (1-3) B-130 (1-3) B-131 (1-3) B-132 (1-3) B-133 (1-3) B-208 (6-8)
Benzo(k)fluoranthene	B-14 (6-8)* B-103(6-8)* B-104(6-8)* B-105 (6-8)				B-8 (1-3) B-14 (6-8)* B-35 (4-6) B-103 (6-8)* B-104 (6-8)* B-105 (6-8)
Chrysene					B-14 (6-8)* B-103 (6-8)* B-104 (6-8)*
Dibenzo(a,h)anthracene	B-1 (1-3) B-5 (1-3) B-6 (1-3) B-7 (1-3) B-8 (1-3) B-8 (4-6) B-9 (4-6) B-14 (6-8)* B-15 (1-3) B-18 (1-3) B-26 (1-3) B-27 (1-3) B-35 (1-3) B-35 (4-6) B-37 (1-3) B-103(6-8)* B-104(6-8)* B-105 (6-8) B-127 (1-3) B-128 (1-3) B-130 (1-3)		B-14 (6-8)* B-103 (6-8)* B-104 (6-8)* B-105 (6-8)		B-8 (1-3) B-8 (4-6) B-14 (6-8)* B-15 (1-3) B-18 (1-3) B-26 (1-3) B-27 (1-3) B-35 (1-3) B-35 (4-6) B-103 (6-8)* B-104 (6-8)* B-105 (6-8) B-127 (1-3) B-130 (1-3) B-131 (1-3) B-132 (1-3) B-133 (1-3) B-208 (6-8)

Compound	Industrial/Commercial Occupants		Construction Workers		Groundwater Ingestion Route (Soil component and Direct)
	Ingestion	Inhalation	Ingestion	Inhalation	(Class I)
Dibenzo(a,h)anthracene Continued	B-131 (1-3) B-132 (1-3) B-132 (4-6) B-133 (1-3) B-207 (6-8) B-208 (6-8)				
Indeno (1,2,3,c,d)pyrene	B-8 (1-3) B-14(6-8)* B-26 (1-3) B-35 (4-6) B-103(6-8)* B-104(6-8)* B-105 (6-8) B-133 (1-3) B-208 (6-8)		B-103 (6-8)*		B-8 (1-3) B-14 (6-8)* B-35 (4-6) B-103 (6-8)* B-104 (6-8)* B-105 (6-8) B-133 (1-3) B-208 (6-8)
Naphthalene **		B-103(6-8)*		B-8 (1-3) B-9 (4-6) B-14 (6-8)* B-26 (1-3) B-35 (1-3) B-35 (4-6) B-103 (6-8)* B-104 (6-8)* B-105 (6-8) B-133 (1-3) B-208 (6-8)	B-14 (6-8)* B-103 (6-8)* B-104 (6-8)* B-105 (6-8) B-208 (6-8)
Carbazole					B-8 (4-6)
Mercury				B-1 (1-3) B-2 (1-3) B-3 (1-3) B-3 (4-6) B-4 (4-6) B-5 (1-3) B-7 (4-6) B-9 (4-6) B-10 (4-6) B-12 (1-3) B-12 (4-6) B-14 (6-8)* B-16 (4-6) B-17 (1-3) B-17 (4-6) B-24 (1-3) B-25 (1-3)	

Compound	Industrial/Commercial Occupants		Construction Workers		Groundwater Ingestion Route (Soil component and Direct)
	Ingestion	Inhalation	Ingestion	Inhalation	(Class I)
Mercury Continued				B-26 (1-3) B-27 (1-3) B-27 (6-8) B-28 (1-3) B-29 (1-3) B-30 (4-6) B-31 (1-3) B-32 (1-3) B-33 (4-6) B-34 (1-3) B-35 (1-3) B-35 (4-6) B-37 (1-3) B-37 (6-8)	
Arsenic	B-3 (4-6) B-4 (1-3) B-4 (4-6) B-5 (1-3) B-6 (1-3) B-7 (4-6) B-13 (1-3) B-16 (4-6) B-17 (1-3) B-17 (4-6) B-26 (1-3) B-27 (1-3) B-29 (4-6) B-30 (4-6) B-35 (1-3) B-35 (4-6)				B-17(4-6)
Lead	B-3 (4-6) B-5 (1-3) B-11 (1-3) B-13 (4-6) B-16 (4-6) B-17 (1-3) B-17 (4-6) B-35 (4-6) B-119 (1-3)		B-3 (4-6) B-5 (1-3) B-7 (1-3) B-11 (1-3) B-13 (4-6) B-16 (4-6) B-17 (1-3) B-17 (4-6) B-27 (1-3) B-35 (4-6) B-119 (1-3)		B-1 (1-3) B-2 (1-3) B-3 (1-3) B-3 (4-6) B-3 (4-6) TCLP*** B-4 (1-3) B-4(4-6) B-5 (1-3) B-5 (1-3) TCLP B-5(4-6) B-7 (1-3) B-7 (4-6) B-8 (1-3) B-9 (4-6)

Compound	Industrial/Commercial Occupants		Construction Workers		Groundwater Ingestion Route (Soil component and Direct)
	Ingestion	Inhalation	Ingestion	Inhalation	(Class I)
Lead Continued					B-11 (1-3) B-11 (1-3) TCLP*** B-11 (4-6) B-11 (4-6) TCLP*** B-12 (1-3) B-13 (1-3) B-13 (4-6) B-13 (4-6) TCLP*** B-14 (4-6) B-15 (1-3) B-16 (4-6) B-16 (4-6) TCLP*** B-17 (1-3) B-17 (1-3) TCLP B-17 (4-6) B-18 (4-6) B-19 (1-3) B-20 (1-3) B-24 (1-3) B-25 (1-3) B-25 (4-6) B-26 (1-3) B-27 (1-3) B-27 (6-8) B-28 (1-3) B-29 (1-3) B-29 (4-6) B-31 (1-3) B-32 (1-3) B-33 (1-3) B-35 (1-3) B-35 (4-6) B-37 (6-8) B-119 (1-3) TCLP: B-106(6-8) B-108(6-8) B-108B(4-6) B-110(6-8) B-110B(4-6) B-116(6-8) B-118(6-8) B-118B(1-3)

Compound	Industrial/Commercial Occupants		Construction Workers		Groundwater Ingestion Route (Soil component and Direct)
	Ingestion	Inhalation	Ingestion	Inhalation	(Class I)
Lead Continued					B-120B(1-3) B-134(4-6) B-201(4-5) B-202(4-5) B-203(6-8) B-204(4-6) B-205(4-6) B-206(4-6) SPLP B-211(6-8)
Lead (Groundwater)					MW-5 MW-10 MW-34 MW-122
Chromium					B-5 (1-3) B-7 (1-3) B-16 (1-3) B-17 (1-3) B-18 (1-3) B-27 (1-3) B-27 (6-8) B-35 (1-3) B-35 (4-6)
Selenium					B-3 (4-6)**** B-5 (1-3)**** B-13 (4-6)**** B-26 (1-3)****
Barium					B-5 (1-3) B-36 (1-3)
Antimony			B-16 (4-6)		B-16 (4-6) B-213(4-6) SPLP
Aluminum					MW-5 MW-122
Iron					MW-5 MW-122
Manganese					MW-5 MW-122
Thallium					MW-122

Table Notes
* Soil samples that exceed the default subsurface attenuation capacity of 2,000 mg/kg (B-14 (6-8'), B-103(6-8') and B-104 (6-8') will be removed during subsequent remedial activities
** Construction worker inhalation exceedances in soil for xylenes and naphthalene removed based on soil gas sample results.
*** Soil around samples B-3, B-13, B-11 and B-16 that exhibit TCLP lead hazardous criteria exceedances will require in-situ chemical treatment to reduce lead below hazardous waste concentrations. New post- treatment samples will be collected to replace those original samples for future evaluation.
**** Selenium pH-specific exceedances removed from consideration based on SPLP sampling results.

No exceedances of the Tier 1 Industrial/Commercial indoor inhalation exposure routes were identified. One sample, B-103, exceeded the industrial/commercial outdoor inhalation exposure route for naphthalene. No volatile chemicals were detected above laboratory reporting limits in the four groundwater samples. Soil gas results detected volatile chemicals, but none exceeding the Tier 1 Industrial/Commercial ROs. Considering that the soil gas sample and monitoring wells were spread throughout the site, and the soil gas samples targeted the areas where the highest concentrations of volatiles were found in soil, the indoor inhalation exposure route warrants no further investigation.

Exhibits 4 through 9 depict the areas of the remediation site where reported concentrations were above the Tier 1 ROs. As depicted on the exhibits, some of the boundaries are open (i.e., undefined) towards the property boundaries. Vertical delineation of contaminants generally identified in fill material at the site was achieved with nearby samples collected in deeper native clay intervals. Because the eventual NFR letter will apply to the remediation site only, the property boundary serves as the edge of the source in the directions where "clean" data is unavailable.

5.0 SITE INVESTIGATION CONCLUSION [740.425(B)(6)]

Terracon has conducted a comprehensive site investigation of the 650 West 83rd Street site. The investigation included evaluation of prior investigation data, and was conducted in accordance with a scope of work developed in collaboration with the 2FM. The site investigation data is sufficient to evaluate current conditions, address the findings of the previous investigation, develop ROs, and recommend future activities.

Chemical impacts to soil at the remediation site consist of benzene, xylenes (total), benzo(a)anthracene, benzo(a)pyrene, benzo(b)fluoranthene, benzo(k)fluoranthene, chrysene, dibenzo(a,h)anthracene, indeno(1,2,3-c,d)pyrene, naphthalene, carbazole, arsenic, antimony, barium, chromium, lead, mercury, and selenium at reported concentrations above applicable Tier 1 SROs. PNA concentrations in three samples exceeded the default attenuation capacity for subsurface soil. Lead concentrations in four samples analyzed with TCLP exceeded hazardous waste criteria. Chemical impacts to groundwater at the remediation site at concentrations above the GROs for Class I groundwater ingestion exposure route consist of lead, aluminum, iron, manganese and thallium.

6.0 REMEDIATION OBJECTIVES [740.445]

6.1 Industrial/Commercial Ingestion

The Tier 1 screening of the soil sample data indicates the presence of various PNAs, arsenic and lead above the TACO Tier 1 Industrial/Commercial ingestion values. Per 35 IAC 742, Appendix B, Table A, footnote w, it is appropriate to apply the urban background values for the site as the soil remediation objectives where such values exceed the TACO Tier 1 Industrial/Commercial ingestion ROs. The background values are applicable based on the site's location in the City of Chicago. The following table identifies the applicable remediation objectives by comparing Tier 1 ROs and Background Concentrations within Chicago for the specific compounds that were found at concentrations exceeding either Tier 1 ROs or applicable background levels:

Table 6-1 Industrial/Commercial Remediation Objectives

COC	TACO Tier 1 Industrial/Commercial Ingestion RO	Background Concentration within Chicago/Metropolitan
Benzo(a)pyrene	0.8	**1.3**
Benzo(a)anthracene	**8**	1.1
Benzo(b)fluoranthene	**8**	1.5
Benzo(k)fluoranthene	**78**	0.99
Indeno(1,2,3-c,d)pyrene	**8**	0.86
Dibenzo(a,h)anthracene	**0.8**	0.2
Arsenic	**13**	13
Lead	**700**	36

Bold = Tier 1 Remediation Objective
All units mg/kg

Laboratory analytical data compared to Industrial/Commercial Soil Ingestion Route ROs are summarized in Tables 1 through 7. The areas with soil exceeding Tier 1 ROs for the Industrial/Commercial Ingestion exposure route are depicted in Exhibit 4 and extend to approximately 8 feet bgs.

6.2 Industrial/Commercial Outdoor Inhalation

Laboratory analysis reported no concentrations of analytes that exceeded the Industrial/Commercial Outdoor Inhalation ROs except for naphthalene concentration at B-103 (6-8). This exceedance is delineated with samples approximately 20 feet away in each direction, as depicted in Exhibit 4. Nearby sample B-14VD(8-10) provides vertical delineation. Results from soil gas sample collected 20 feet to the east (SG-14) did not exceed this exposure route for naphthalene. Soil surrounding B103 exceeds the attenuation capacity for subsurface soil and is planned to be excavated and removed from site. Laboratory analytical

data compared to Industrial/Commercial Outdoor Inhalation Exposure Route ROs are summarized in Tables 1-3, 5-7, and 9.

6.3 Industrial/Commercial Indoor Inhalation

Laboratory analysis from four groundwater and four soil gas samples collected reported no concentrations of analytes that exceeded the Industrial/Commercial Indoor Inhalation ROs. Considering that the soil gas sample and monitoring wells were spread throughout the site, and the soil gas samples targeted the areas where the highest concentrations of volatiles were found in soil, the indoor inhalation exposure route warrants no further investigation. Laboratory analytical data compared to Industrial/Commercial Indoor Inhalation Exposure Route ROs are summarized in Tables 8 and 9.

6.4 Construction Worker Ingestion

The Tier 1 screening of the soil sample data indicates the presence of several PNAs, lead, antimony above the TACO Tier 1 Construction Worker ingestion exposure route. Laboratory analytical data compared to Construction Worker Soil Ingestion Route ROs are summarized in Tables 1 through 7. The areas with soil exceeding Tier 1 ROs for the Construction Worker Ingestion exposure route are depicted in Exhibit 6, and extend to approximately 8 feet bgs. A construction worker caution will be included on the NFR letter to address the construction worker exceedances

6.5 Construction Worker Inhalation

The Tier 1 screening of the soil sample data indicated that Xylenes (total), naphthalene and mercury were identified at concentrations exceeding the TACO Tier 1 SROs for the Construction Worker Inhalation exposure route. Laboratory analytical data compared to Construction Worker Soil Inhalation Route ROs are summarized in Tables 1 through 7 and 9.

To further evaluate the xylene and naphthalene impacts, soil gas samples were collected at the locations coinciding with the highest concentrations of these volatiles in soil. SG-16 was collected near previous sample B-16 and analyzed for VOCs and naphthalene. All samples were collected from 3-4 feet bgs, except for SG-14, which was collected deeper at approximately 5 feet bgs, closer to elevated subsurface naphthalene impacts at 8-10' bgs. The soil gas samples did not exceed the Soil Gas Remediation Objectives. Therefore, the construction worker inhalation exceedances in soil for xylenes and naphthalene are removed from further evaluation based on soil gas sample results.

The areas with soil exceeding Tier 1 ROs for the Construction Worker Inhalation exposure route are depicted in Exhibit 5, and extend to approximately 8 - 10 feet bgs. A construction

worker caution will be included on the NFR letter to address the construction worker inhalation exceedances

6.6 Soil to Groundwater

The Tier 1 screening of the soil sample data indicates the presence of benzene, several PNAs, and carbazole above TACO Tier 1 SROs for the Soil Component of Class I Groundwater Ingestion Exposure Route. Tables 1 and 2 summarize this data, and Exhibit 7C depicts the plumes, which extend to approximately 8 feet bgs.

Metals reported at concentrations over background were further evaluated with pH-specific SROs. During the 2013 sampling event, 15 samples were selected to adequately characterize the pH of the soil throughout the entire site area and at each subsurface interval. Inorganic pH-specific analyses for samples with no laboratory pH value were evaluated using the nearest sample pH from the same subsurface interval.

Comparison of the data to the pH-specific Tier 1 SROs, as provided in Table 4, indicated that several inorganic constituents, including barium, chromium (total), lead, antimony, arsenic and selenium, were above the pH-Specific TACO Tier 1 Soil Component of the Groundwater Ingestion Route for Class I Groundwater. Calcium, magnesium, sodium and potassium were detected over background in soil samples, but are considered nutrients in soil and do not require further consideration.

Soil samples with metals over background and pH-specific SRO were further evaluated with TCLP/SPLP to determine if the maximum chemical concentrations would leach to the groundwater at levels above the established Tier 1 GROs for Class I groundwater. Borings B211 through B214 were advanced in locations coinciding with prior samples requiring further evaluations. Samples were selected for analysis from the interval where the highest concentrations were previously identified.

SPLP testing of B-212(1-3) for barium and selenium collected at the location of previous sample B-5 met the Class I GROs. SPLP testing was conducted for B-213, coinciding with previous B-16 that exhibited aluminum, antimony, cobalt, iron and nickel that were over metropolitan background concentrations. Results met the Class I GROs for all but antimony, removing those metals from future consideration. B214 collected at previous B26 used SPLP testing to exclude an arsenic and selenium sample from consideration. TCLP/SPLP data is presented in Table 7.

Additionally, due to access restriction, additional SPLP sampling to evaluate the soil component to groundwater exposure route will be planned to be conducted during remedial activities with results provided in future IEPA reporting. This includes SPLP Cadmium and

Selenium from 4-6 feet bgs near sample B-3; TCLP lead from 6-8 feet bgs to vertically delineate B-3 for hazardous lead; SPLP copper, mercury, and zinc from 1-3 feet bgs near B1/B2, TCLP lead, SPLP beryllium SPLP manganese near B1/B2 from 4-6' bgs, and SPLP barium from 1-3 feet bgs near B36.

TCLP analysis was performed for several samples with elevated total lead concentrations to evaluate if any of the TCLP lead results were above the characteristically toxic concentration of 5.0 mg/L. Four samples in four distinct areas exceeded the hazardous threshold, so additional samples were collected to delineate the extent of soil with hazardous concentrations, with the additional samples spaced 20 feet in each direction from the original impacted locations. A total of 30 samples were analyzed for TCLP lead. Most of the TCLP results exceeded the Class I GRO of 0.0075 mg/L. Further evaluation of the TCLP sample for B106 was evaluated was conducted with SPLP analysis in sample B211 collected in the same location, with a result of 0.093 mg/L.

The sample with highest total chromium concentration that exceeded pH-specific SRO, B-5 (1-3), was selected to be analyzed for hexavalent chromium to be more accurately compared to the pH-specific soil component to groundwater SRO. The hexavalent chromium results were not detected above laboratory reporting limits, and were below the Class I SRO, which indicates that chromium does not require further consideration.

Laboratory analytical data compared to Soil Component of the Groundwater Ingestion Route ROs are summarized in Tables 1 through 7. The areas with inorganic concentrations in the soil that exceed Tier 1 ROs for the Soil Component to Class I groundwater exposure route are depicted in Exhibits 7a and 7b, and extend to approximately 8 feet bgs.

6.7 Groundwater

A Tier 1 evaluation of groundwater at the site was performed to identify whether the groundwater was impacted with COCs above Tier 1 Class I GROs. Groundwater sample results indicated lead, aluminum, iron, manganese and thallium at concentrations above the TACO Tier 1 Groundwater Ingestion Route GRO for Class I Groundwater.

7.0 TIER II ASSESSMENT

Table 7-1 summarizes the compounds from Table 4-1 that were detected at levels in soil that exceeded the Soil Component of the Class I Groundwater Ingestion Route SRO or in groundwater above the Class I GROs.

Table 7-1 Compounds of Potential Concern to Groundwater

Compound	Media	Sample Locations
Benzene	Soil	B-16 (4-6)
Benzo(a)anthracene	Soil	B-1 (1-3), B-3 (1-3), B-3 (4-6), B-5 (1-3), B-6 (1-3), B-7 (1-3), B-8 (1-3), B-8 (4-6), B-9 (4-6), B-15 (1-3), B-18 (1-3), B-20 (1-3), B-25 (1-3), B-25 (4-6), B-26 (1-3), B-27 (1-3), B-31 (1-3), B-34 (1-3), B-35 (1-3), B-35 (4-6), B-37 (1-3), B-105 (6-8), B-125 (1-3), B-127 (1-3), B-128 (1-3), B-129 (1-3), B-130 (1-3), B-131 (1-3), B-132 (1-3), B-132 (4-6), B-133 (1-3), B-207 (6-8), B-208 (6-8)
Benzo(a)pyrene	Soil	B-8 (1-3), B-8 (4-6), B-15 (1-3), B-18 (1-3), B-26 (1-3), B-27 (1-3), B-35 (1-3), B-35 (4-6), B-105 (6-8), B-127 (1-3), B-130 (1-3), B-131 (1-3), B-132 (1-3), B-133 (1-3), B-208 (6-8)
Benzo(b)fluoranthene	Soil	B-8 (1-3), B-8 (4-6), B-9 (4-6), B-15 (1-3), B-18 (1-3), B-26 (1-3), B-27 (1-3), B-35 (1-3), B-35 (4-6), B-37 (1-3), B-105 (6-8), B-127 (1-3), B-130 (1-3), B-131 (1-3), B-132 (1-3), B-133 (1-3), B-208 (6-8)
Benzo(k)fluoranthene	Soil	B-8 (1-3), B-35 (4-6), B-105 (6-8)
Dibenzo(a,h)anthracene	Soil	B-8 (1-3), B-8 (4-6), B-15 (1-3), B-18 (1-3), B-26 (1-3), B-27 (1-3), B-35 (1-3), B-35 (4-6), B-105 (6-8), B-127 (1-3), B-130 (1-3), B-131 (1-3), B-132 (1-3), B-133 (1-3), B-208 (6-8)
Indeno (1,2,3,c,d)pyrene	Soil	B-8 (1-3), B-35 (4-6), B-105 (6-8), B-133 (1-3), B-208 (6-8)
Naphthalene	Soil	B-105 (6-8), B-208 (6-8)
Carbazole	Soil	B-8 (4-6)
Lead**	Soil and Groundwater	B-1 (1-3), B-2 (1-3), B-3 (1-3), B-3 (4-6), B-4 (1-3), B-4(4-6), B-5 (1-3), B-5(4-6), B-7 (1-3), B-7 (4-6), B-8 (1-3), B-9 (4-6), B-11 (1-3), B-11 (4-6), B-12 (1-3), B-13 (1-3), B-13 (4-6), B-14 (4-6) B-15 (1-3) B-16 (4-6) B-17 (1-3) B-17 (4-6) B-18 (4-6) B-19 (1-3) B-20 (1-3) B-24 (1-3) B-25 (1-3) B-25 (4-6) B-26 (1-3) B-27 (1-3) B-27 (6-8) B-28 (1-3) B-29 (1-3) B-29 (4-6) B-31 (1-3) B-32 (1-3) B-35 (1-3) B-35 (4-6) B-37 (6-8) B-119 (1-3). **TCLP:** B-106(6-8), B-108(6-8), B-108B(4-6), B-110(6-8), B-110B(4-6), B-116(6-8), B-118(6-8), B-118B(1-3),

Lead Continued		B-120B(1-3), B-134(4-6), B-201(4-5), B-202(4-5), B-203(6-8), B-204(4-6), B-205(4-6), B-206(4-6) **SPLP:** B-211(6-8) MW-5 MW-10 MW-34 MW-12
Arsenic	Soil	B-17(4-6)
Aluminum	Groundwater	MW-5, MW-122
Iron	Groundwater	MW-5, MW-122
Manganese	Groundwater	MW-5, MW-122
Thallium	Groundwater	MW-122

* Soil samples that exceed the default subsurface attenuation capacity of 2,000 mg/kg (B-14 (6-8'), B-103(6-8') and B-104 (6-8') will be removed during subsequent remedial activities were not included in this evaluation

** Soil samples B-3(4-6'), B-11(1-3'), B-13(4-6'), and B-16(4-6') that exhibit TCLP lead exceedances, require in-situ chemical treatment to reduce lead below hazardous waste concentrations. Confirmation samples will be collected after treatment and results will be used to evaluate the soil component to groundwater exposure route.

For the chemicals listed in Table 7-1, Terracon did not conduct transport evaluation, since future TCLP sampling is planned as a part of remedial hazardous waste lead treatment. Additional SPLP sampling is planned in areas where access is currently not available. Once all data is collected, Terracon will use TACO Equations as provided in 35 IAC Part 742, Appendix C, Tables A and C to evaluate the potential for future transport of contaminants. Results of this sampling and associated potential for future transport will be reported to IEPA in future RACR submittal. Based on concentrations identified in groundwater, it is not expected that future soil sampling will result in elongated notification distances.

To determine the off-site migration potential for inorganic contaminants in groundwater, Equation R26 was used to calculate the distance to compliance with the Class I GROs. Table 7-2 summarizes the inputs for the calculations. Printouts of the R26 results are attached in Appendix G.

Table 7-2 Modeling Input Parameters: R26 and Supporting Equations

Parameter	Value
ρ_b (Dry Soil Bulk Density) - TACO Default	1.5 g/cm^3
θ_a (Air-Filled Soil Porosity) - TACO Defaults	Surface - 0.28 cm^3_{air}/cm^3_{soil}
θ_w (Water-Filled Soil Porosity) - TACO Defaults	Surface - 0.15 cm^3_{air}/cm^3_{soil}
θ_{as} (Volumetric Air Content in Vadose Zone Soils) - TACO Defaults	Surface - 0.28 cm^3_{air}/cm^3_{soil}
θ_{ws} (Volumetric Water Content in Vadose Zone Soils) - TACO Defaults	Surface - 0.15 cm^3_{air}/cm^3_{soil}
f_{oc} (Organic Carbon Content of Soil) – Default	Surface Soil = 0.006, Subsurface Soil = 0.002
K (Aquifer Hydraulic Conductivity) - Measured	MW-5 Slug Test: 0.0027 cm/sec)
i (Hydraulic Gradient) - Measured	IEPA tool MW-5 —> MW-34 = 0.001

Parameter	Value
S_w (Source Width Perpendicular to Groundwater Flow Direction in Horizontal Plane) - Chemical-Specific	NE to SW corner of site = 500 feet Perpendicular to groundwater flow
S_d (Source Width Perpendicular to Groundwater Flow Direction in Vertical Plane) - TACO Default for Groundwater	For Groundwater - 200 cm (6.52 feet) 35 IAC Section 742, Appendix C, Table D in cm
K_{oc} (Organic Carbon Partition Coefficient) - Chemical-Specific	35 IAC Section 742, Appendix C, Table E in L/kg
λ (First Order Degradation Constant) - Chemical-Specific	35 IAC Section 742, Appendix C, Table E in day^{-1}, Zero for inorganics

Table 7-3 summarizes the results of the calculations.

Table 7-3 Calculation Results: R26 Compliance Points for Groundwater COCs

Chemical	Sample location	Distance Required for Tier 1 GRO Compliance
Lead	MW-5	75 feet
	MW-10	430 feet
	MW-34	180 feet
	MW-122	540 feet
Aluminum	MW-5	60 feet
	MW-122	60 feet
Iron	MW-5	175 feet
	MW-122	160 feet
Manganese	MW-5	500 feet
	MW-122	800 feet
Thallium	MW-122	300 feet

According to the Tier 2 calculations, the COCs have the potential to migrate offsite. The R26 calculations for soil to groundwater, and exhibit depicting off-site migration distances, will be provided in a separate submittal to IEPA after future TCLP and SPLP sampling is completed.

8.0 EXPOSURE ROUTE EXCLUSIONS

This section presents information supporting the exclusion of specific exposure routes, including the Groundwater Ingestion (including Soil Component) exposure routes.

8.1 Requirements for All Exposure Routes [742.305]

The following sections support the general requirements for pathway exclusion as defined by 35 IAC Section 742.305.

Soil Attenuation Capacity [742.305(a)]
PNA concentrations identified in sample B-14(6-8') collected in June 2013 exceeded the default subsurface attenuation limit of 2,000 mg/kg. Development of a site-specific attenuation limit was precluded by the widespread presence of deep fill with organic contamination on site. Multiple PNAs were detected in each subsurface sample collected. Soil sampling conducted in an attempt to delineate the default subsurface attenuation capacity exceedance in sample B-14(6-8') on the site was successful to the north, east, and south, but not to the west, as two additional samples (B-103(6-8') and B-104(6-8') in this direction were found to exceed the default subsurface attenuation capacity (2,000 mg/kg). Sample B-103(6-8') had PNA concentration summing to 3,174 mg/kg, and B-104(6-8') had PNA concentrations summing to 4,233 mg/kg. Each was additionally analyzed for total petroleum hydrocarbons (TPH), but none had significant results. In February 2015, samples B-207(6-8), B-208(6-8) B-209(6-8) were collected and analyzed for PNAs. Results of all three each summed less than 2,000 mg/kg and provided western delineation for the attenuation exceedance area. Approximately 3,200 square feet (ft^2) of soil from 4-9 feet will be excavated and disposed to address subsurface soil with organic contamination over the attenuation capacity, as further described in **Sections 10 and 11**. After remediation of the identified area, this requirement will be met.

Soil Saturation Limit [742.305(b)]
As set forth in 35 IAC Section 742.305(b), the concentration of any organic contaminants of concern remaining in soil shall not exceed C_{sat}. Values for C_{sat} are listed in 35 IAC 742, Appendix A, Table A. No concentrations of the organic contaminants at the site were identified at concentrations which exceed the values listed in 35 IAC 742, Appendix A, Table A. This requirement is met.

Hazardous Waste Reactivity Characteristics [742.305(c)]
As set forth in 35 IAC Section 742.305(c), soil containing contaminants of concern shall not exhibit any of the characteristics of reactivity for hazardous waste as determined under 35 IAC Section 721.123. According to 35 IAC Section 721.123, solid waste that exhibits the

characteristic of reactivity has the USEPA Hazardous Waste Number of D003 and/or has any of the following properties.

- It is normally unstable and readily undergoes violent change without detonating.
- It reacts violently with water.
- It forms potentially explosive mixtures with water.
- When mixed with water, it generates toxic gases, vapors, or fumes in a quantity sufficient to present a danger to human health or the environment.
- It is a cyanide or sulfide bearing waste which, when exposed to pH conditions between 2 and 12.5 can generate toxic gases, vapors or fumes in a quantity sufficient to present a danger to human health or the environment.
- It is capable of detonation or explosive reaction if it is subjected to a strong initiating source or if heated under confinement.
- It is readily capable of detonation or explosive decomposition or reaction at standard temperature and pressure.
- It is a forbidden explosive as defined in 49 CFR 173.51, or a Class A explosive as defined in 49 CFR 173.53 or a Class B explosive as defined in 49 CFR 173.88, incorporated by reference in 35 IAC 720.111.

Based on field observations, site history, and results of the analyses conducted, including the representative waste characterization sample analyzed, the type and quantity of contaminants of concern present at the site do not constitute a hazardous waste as defined above relative to potential reactivity. The waste characterization sample lab report is provided in Appendix E. This requirement is met.

pH of Soil [742.305(d)]

As set forth in 35 IAC Section 742.305(d), soil that contains contaminants of concern shall not exhibit a pH less than or equal to 2.0 or greater than or equal to 12.5. Each soil sample analyzed for pH at the site did not exhibit a pH less than or equal to 2.0 or greater than or equal to 12.5. This requirement is met.

Hazardous Waste Toxicity Characteristics [742.305(e)]

As set forth in 35 IAC Section 742.305(e), soil that contains arsenic, barium, cadmium, chromium, lead, mercury, selenium, or silver as contaminants of concern shall not exhibit the characteristics of toxicity for hazardous waste as determined by 35 IAC Section 721.124. A representative waste characterization sample was collected from the remediation site on February 20, 2015 and analyzed for each of the above-listed metals, with no exceedances of the limits provided in 35 IAC 721.124. The reported concentrations did not exceed those listed in 35 IAC Section 721.124. The waste characterization sample lab report is provided in Appendix E. This requirement is met for metals other than lead.

TCLP analysis was performed for several samples with elevated total lead concentrations to evaluate if any of the TCLP lead results were above the characteristically toxic concentration

of 5.0 mg/L. Four samples [B-3 (4-6), B-11 (1-3), B-13 (4-6), and B-16 (4-6)] in four distinct areas depicted on Exhibit 8 exceeded the hazardous threshold. Additional samples were collected to delineate the extent of soil with hazardous concentrations around each exceedance, with the additional samples spaced 20 feet in each direction from the original impacted locations.

A total of 30 samples were analyzed for TCLP lead, many of which helped provide horizontal and vertical delineation for the hazardous areas. Due to access restrictions during work in February 2015, horizontal delineation around B-3 was limited, and vertical delineation was not possible. This sampling will be completed during planned in-situ remediation which will be conducted to reduce leachable lead concentration, as detailed in **Sections 10 and 11**. After successful in-situ remediation and associated confirmation sampling, this requirement will be met.

Polychlorinated Biphenyls [742.305(f)]

As set forth in 35 IAC Section 742.305(f), if the contaminants of concern include PCBs, then the concentration of any PCBs in the soil shall not exceed 50 mg/kg. The PCB values in all the samples were below the laboratory detection limits. This requirement is met.

Soil Gas Explosive Limit [742.305(g)]

As set forth in 35 IAC Section 742.305(f), the concentration of any COC in soil gas shall not exceed 10% of its lower explosive limit. During soil gas sampling, a calibrated, hand-held LEL meter was utilized to measure subsurface gas prior to sampling. The LEL measured 0 percent of LEL. The LELs for the COCs identified at the site are several magnitudes of order greater than any concentration identified in the soil gas sample data. This requirement is met.

Waste Characterization

In addition to the samples collected and analyzed for this site investigation, a sample was collected from soil near the hazardous lead and attenuation exceedance areas and submitted to STAT Analysis for waste characterization parameters. These parameters include TCLP volatiles (8260B), TCLP semivolatiles (8270C), PCBs (8082), TCLP RCRA metals including mercury (6010B, 7470A), ignitability (1010), reactive sulfide (EPA 7.3.4), reactive cyanide (9014), organic halides (9023), pH (9045C), phenolics (9066), and paint filter (9095A). The results of these analyses confirm that the soil at the remediation site is not hazardous (beyond the aforementioned TCLP lead). The complete laboratory analytical report is included in Appendix E.

8.2 Groundwater Ingestion Exposure Route [742.320]

8.2.1 Requirements of 742.300 and 742.305 [742.320(a)]

As indicated in **Section 5.0**, the site investigation data is sufficient to characterize the extent and concentrations of contaminants of concern at the remediation site. The requirements of 35 IAC Section 742.300 are met.

8.2.2 Free Product [742.320(b)]

Terracon did not observe free-phase liquids on or in groundwater nor in soil/fill matrices during exploration. No indications of free product were reported in the historical investigations.

8.2.3 Setback Zones and Recharge Areas [742.320(c)]

As set forth in 35 IAC Section 742.320(c), contaminant of concern sources must not be located within the minimum or designated maximum setback zone or within a regulated recharge area of a potable water supply well. **Section 2.3.2** describes the potable water supply and well survey. Based on the results of the survey, contaminant sources are not located within the minimum or designated maximum setback zone or within a regulated recharge area of a potable water supply well. The water supply / well survey is included as Appendix D.

8.2.4 Ordinance [742.320(d)]

Potable water in the area is supplied by the City of Chicago. Additionally, the City of Chicago has an ordinance in place that prohibits the use of groundwater as a potable water supply. The ordinance has been reviewed and approved for use as an institutional control by the IEPA. A copy of the City of Chicago Groundwater Ordinance is included as Appendix F.

8.2.5 Protection of Setback Zones and Recharge Areas [742.320(e)]

As described in the potable water well survey, there are no potable wells within at least 2,500 feet from the remediation site and further the City of Chicago has an ordinance prohibiting the installation of a potable water well. The site meets this requirement.

8.2.6 Protection of Surface Water [742.320(f)]

As set forth in 35 IAC 742.320(f), the concentration of any compound in groundwater discharging into a surface water will meet the applicable surface water quality standard under 35 IAC 302 *Water Quality Standards*. Surface water bodies were not located at the site or in the immediate vicinity. A small pond in Auburn Park is located 2,500 feet northeast of the site; Lake Michigan is located more than five miles to the east. Therefore, this requirement is met.

9.0 REMEDIAL ACTION PLAN [740.450]

Executive Summary [740.450(a)]
This section describes the various elements of the proposed RAP and how these elements will satisfy the remedial objectives under TACO. The RAP for the site will include several elements that will work together to satisfy the remedial requirements of the site in conformance with the site remediation protocols of the TACO requirements.

The goals of the remedial actions are to address areas of the site with attenuation capacity exceedances and hazardous waste lead exceedances as well as eliminate human exposure to the COCs at the site.

Remediation Objectives [740.450(b)]
The ROs for the site are outlined in the Remedial Objectives Report discussed in Section 6.0 of this report. The use of engineered barriers and institutional controls will be implemented to address the industrial/commercial soil remediation objectives at the remediation site.

10.0 REMEDIAL TECHNOLOGIES SELECTED [740.450(C)]

10.1 In-situ Chemical treatment

Samples B-3(4-6'), B-11(1-3') B-13(4-6'), and B-16(4-6') analyzed for TCLP lead exhibited hazardous concentrations. Samples were collected in the follow-up investigation beneath and around those sample locations and analyzed for TCLP lead in an attempt to delineate impacts, with the additional samples spaced 20 feet in each direction from the original impacted locations. Horizontal and vertical delineation was achieved in each area, except for around B-3 where access was prevented during the February 2015 investigation. The areas with soil exceeding toxic characteristic concentration of 5.0 mg/L for lead are depicted in Exhibit 8. Impacts in each area extend from 3 to 7 feet bgs, except for B-11, which has impact from 0 to 4 feet bgs.

If the area around four soil samples [B-3 (4-6'), B-11 (1-3'), B-13 (4-6') and B-16 (4-6')] were treated to reduce leachable lead to less than 5.0 mg/l, it would no longer be considered as hazardous waste. Approximately 8,110 square feet (ft^2) to an average depth of four feet will require in-situ chemical treatment to reduce lead below hazardous waste concentrations. This would be achieved by mechanically mixing a lead stabilization reagent throughout the targeted area. It is proposed that the 0 to 3' interval for B-3, B-13, and B-16 be removed and set aside to allow for mixing of the subsurface hazardous waste lead soils from 3 to 7 feet bg. Topsoil would be replaced after successful treatment. The reagent would be applied in accordance with manufacturer's recommendations for safety and reagent dosage to safely achieve

desired results to reduce leachable lead concentrations. Confirmation samples would be collected from each area on a 20 by 20-foot grid and analyzed for TCLP lead. If hazardous concentrations are found in any area, additional treatment would be applied. Once all soil is reduced below hazardous levels, it is assumed this subsurface soil will remain on site under an engineered barrier of three feet of clean fill or asphalt pavement. Additional information of the in-site chemical treatment will be documented in the RACR.

10.2 Remedial Excavation

As discussed in the section 8.1 of this report, PNA concentrations identified in sample B-14(6-8'), B-103(6-8') and B-104 (6-8') exceeded the default subsurface attenuation capacity. Sample B-103(6-8') additionally exceeded the industrial/commercial outdoor inhalation exposure route for naphthalene. Three samples B-207 (6-8'), B-207 (6-8'), and B-207 (6-8') were collected during the February 2015 investigation and were analyzed for PNAs in an attempt to delineate the extent of impact to the west. All samples collected around and below prior impacted samples had concentrations below default subsurface attenuation. It is proposed that the top 5 feet in the attenuation area would be excavated and set aside to allow access to the soil exceeding the attenuation limit. Approximate 2,400 square feet (ft^2) of soil from 5-9 feet would be excavated and disposed to address subsurface soil with organic contamination over the attenuation capacity and outdoor inhalation exposure route. Since delineation has been achieved, no further confirmation samples in this area would be planned. The excavation would then be backfilled with the topsoil that was set aside, with the remainder comprised of surrounding soil or three feet of virgin stone backfill. Additional information of the remedial excavation will be documented in the RACR.

10.3 Engineered Barriers

To exclude the industrial/commercial ingestion exposure route in impacted areas planned for landscaping, soil will be excavated to a minimum depth of three feet below final grade and disposed at a licensed Subtitle D landfill. The landscaped engineered barrier areas will be backfilled with approved clean fill under environmental professional oversight. The ingestion exposure route in other areas of the site will be excluded with construction of engineered barriers in the form of concrete structures, concrete foundations, concrete pavements, and asphalt pavements meeting the requirements of subpart K.

The excavation in landscaped areas will be backfilled with clean soil and/or virgin stone from a local quarry. The clean soil to be utilized will have previously been sampled at a rate of one sample per 1,000 cubic yards and analyzed for the TCL, pH, and TCLP/SPLP RCRA metals. In order to be classified as clean for this remediation site, the analytical results must show that the reported concentrations are below the Tier 1 SROs for residential land use.

10.4 Groundwater and Offsite Notification

Groundwater exceeding GROs for Class I groundwater, and soil exceeding the soil component to Class I groundwater SROs were identified on site. The groundwater ingestion exposure route will be excluded through use of the City of Chicago's ordinance prohibiting the use of potable water wells. Groundwater modeling was conducted for contaminants identified in groundwater wells, and the potential for off-site migration until Class I GRO compliance is achieved was observed. Additional modeling for the soil component to groundwater exposure route is planned following completion of in-situ remediation and collection of TCLP confirmation sampling and SPLP sampling results. Results will be provided in the RACR. Property owners within the potential migration distance will be notified. Full concrete building slabs will be required to meet the indoor vapor intrusion requirements.

11.0 CONFIRMATION SAMPLING PLAN [740.450(D)]

As described in **Section 10.1**, confirmation samples would be collected from each hazardous lead treatment area on a 20 by 20-foot grid, and analyzed for TCLP lead. Since access was not available during the February 2015 investigation, vertical and horizontal confirmation samples will be collected around sample B-3.

Additionally, due to access restrictions, SPLP sampling to evaluate the soil component to groundwater exposure route could not be completed in February 2015. SPLP sampling will be conducted during remedial activities with results provided in future IEPA reporting. This includes SPLP Cadmium and Selenium from 4-6 feet bgs near sample B-3; TCLP lead from 6-8 feet bgs to vertically delineate B-3 for hazardous lead; SPLP copper, mercury, and zinc from 1-3 feet bgs near B1/B2, TCLP lead, SPLP beryllium SPLP manganese near B1/B2 from 4-6' bgs, and SPLP barium from 1-3 feet bgs near B36.

After redevelopment, exposure to subsurface soil containing remaining concentrations of COCs will be prevented by construction of new concrete foundations and building slabs, new pavement, or a three foot clean fill engineered barrier placed in planned landscaped areas. No confirmation sampling is planned in these general site areas.

12.0 CURRENT AND POST-REMEDIATION LAND USE [740.450(E)]

Current use of the remediation site is a vacant lot. The City of Chicago is considering repurposing the 650 W. 83rd Street site property for an anaerobic digester and other uses. No detailed plan is available at this time but will be provided to IEPA upon receipt.

13.0 OTHER REQUIREMENTS [740.450(F)]

Construction Worker Caution

Work activities will require notification of Construction Workers of the contaminants of concern and inaction of safety measures, including appropriate level of personal protective equipment and monitoring. Exhibits 5 and 6 show the location of the caution areas at the remediation site.

Soil Management Zone

As set forth in 35 IAC 740.535, the establishment of a soil management zone (SMZ) at the remediation site will be implemented for use of consolidation of contaminated soil within the remediation site. All applicable requirements to allow use of a SMZ on site have been met, including those requirements in 742.305(a) through (g) (see Section 2), and those in 742 Subparts J and K. COCs at the remediation site have been identified with this comprehensive site investigation. The SMZ boundaries will be defined as areas of the remediation site that have exceedances of Tier 1 SROs. Soils may be consolidated within the SMZ. The SMZ will be maintained in a manner that prevents odors; minimizes fugitive emissions; prevents contaminated runoff; and does not provide a breeding place or food source for vectors.

The redevelopment of the site may require use of on-site soil under planned structures located on the site. A SMZ establishes procedures for the reuse of soil at a remediation site that complies with the conditions detailed in the RAP. Additionally, the quantity, source location, and final location of the soil must be documented in the RACR.

Institutional Controls

The City's groundwater use ordinance is also an institutional control for the remediation site. The RA anticipates that the Draft and Final NFR letters for the site will incorporate these controls. Further, full concrete slabs will be required for future buildings constructed on site.

14.0 CONCLUSIONS

Based upon Terracon's field observations, assessment of laboratory analytical data and TACO evaluation based on the site investigation, the following conclusions are made relative to the site:

- Benzene, PNAs, carbazole, lead, arsenic, antimony, barium, chromium, iron, mercury, aluminum, manganese and thallium were identified as COCs at the site.
- PNA concentrations identified in three adjacent samples in the north-central portion of the site exceeded the default attenuation capacity for subsurface soil. One sample also exceeded the outdoor inhalation exposure route for naphthalene. Excavation of this soil and landfill disposal is proposed to eliminate the attenuation and outdoor inhalation exposure route exceedances.
- Lead concentrations in four samples from four discreet areas were identified that exceed hazardous waste criteria. In-situ mechanical mixing using a chemical reagent is proposed to reduce leachable lead concentrations below the hazardous waste lead threshold. Confirmation samples will be collected in the treatment areas on a 20 by 20-foot grid to demonstrate TCLP lead concentrations have been reduced below 5.0 mg/L.
- PNAs, arsenic, and lead were detected above TACO Tier 1 SROs for the industrial/commercial ingestion exposure route.
- A construction worker safety plan will be required for site work due to the identified Tier 1 SRO exceedances of the construction worker inhalation and ingestion exposure routes.
- Soil gas samples collected in four locations on site found no exceedances of applicable Tier 1 ROs.
- To meet the ROs for the site, a remedial plan consisting of remedial activities and construction of engineered barriers during development of an industrial/commercial facility is planned. Soil in planned landscaped areas will be removed, and three feet of clean backfill will be placed. All soils excavated in the remedial efforts will be disposed of at a permitted Subtitle D landfill.

Upon completion of the investigation and remedial activities outlined herein, a RACR will be submitted to IEPA to document the completed soil removal.

EXHIBITS

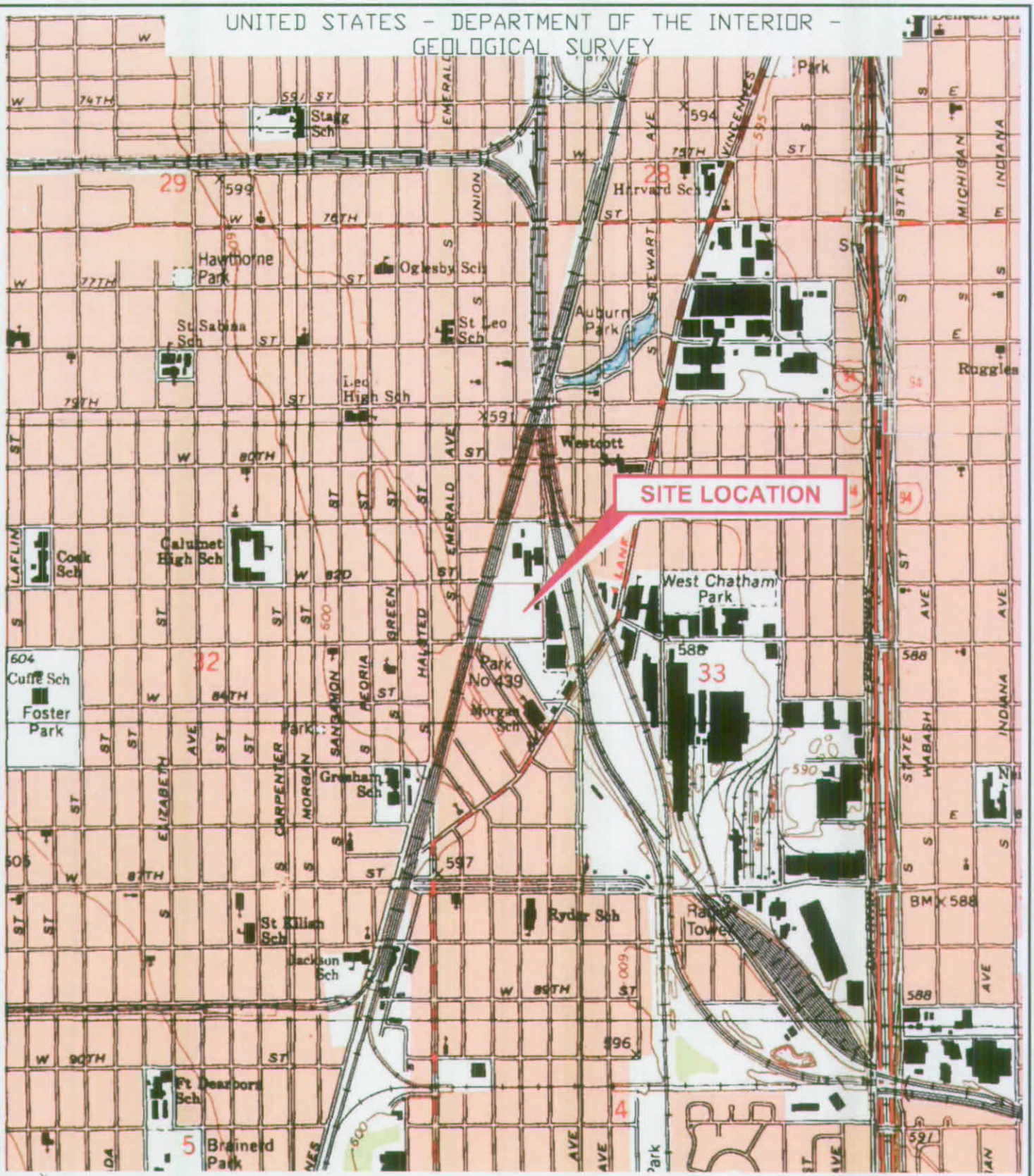

N:\Projects\2015\A2157000\Working Files\Diagrams-Drawings-Figures\Exhibit 1 - TOPO.dwg

Project Mngr: RMO	Project No: A2157000
Drawn By: SDM	Scale: AS-SHOWN
Checked By: RMO	Revised By: -
Approved By: RMO	Date: March 3, 2015

Terracon
Consulting Engineers and Scientists

TOPOGRAPHIC VICINITY MAP

650 WEST 83RD STREET
CHICAGO, ILLINOIS

EXHIBIT 1

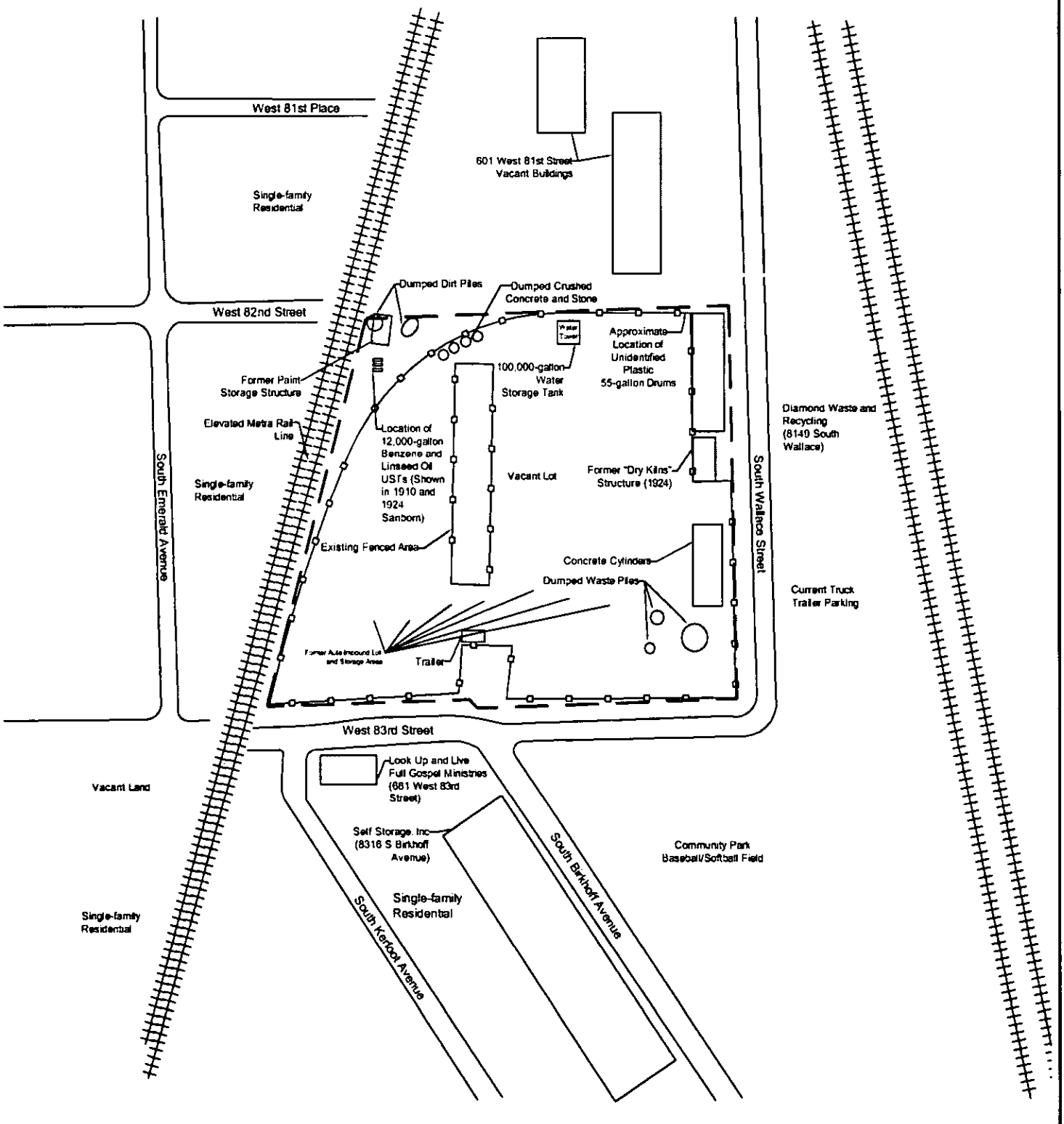

N:\Projects\2015\A2157000\Working Files\Diagrams-Drawings-Figures\SHP Exhibits.dwg

Project Mngr: RMO	Project No: A2157000	Terracon Consulting Engineers and Scientists	SITE FEATURE MAP
Drawn By: SDM	Scale: AS-SHOWN		650 WEST 83RD STREET CHICAGO, ILLINOIS
Checked By: RMO	Revised By: -		EXHIBIT 2
Approved By: RMO	Date: March 2, 2015		

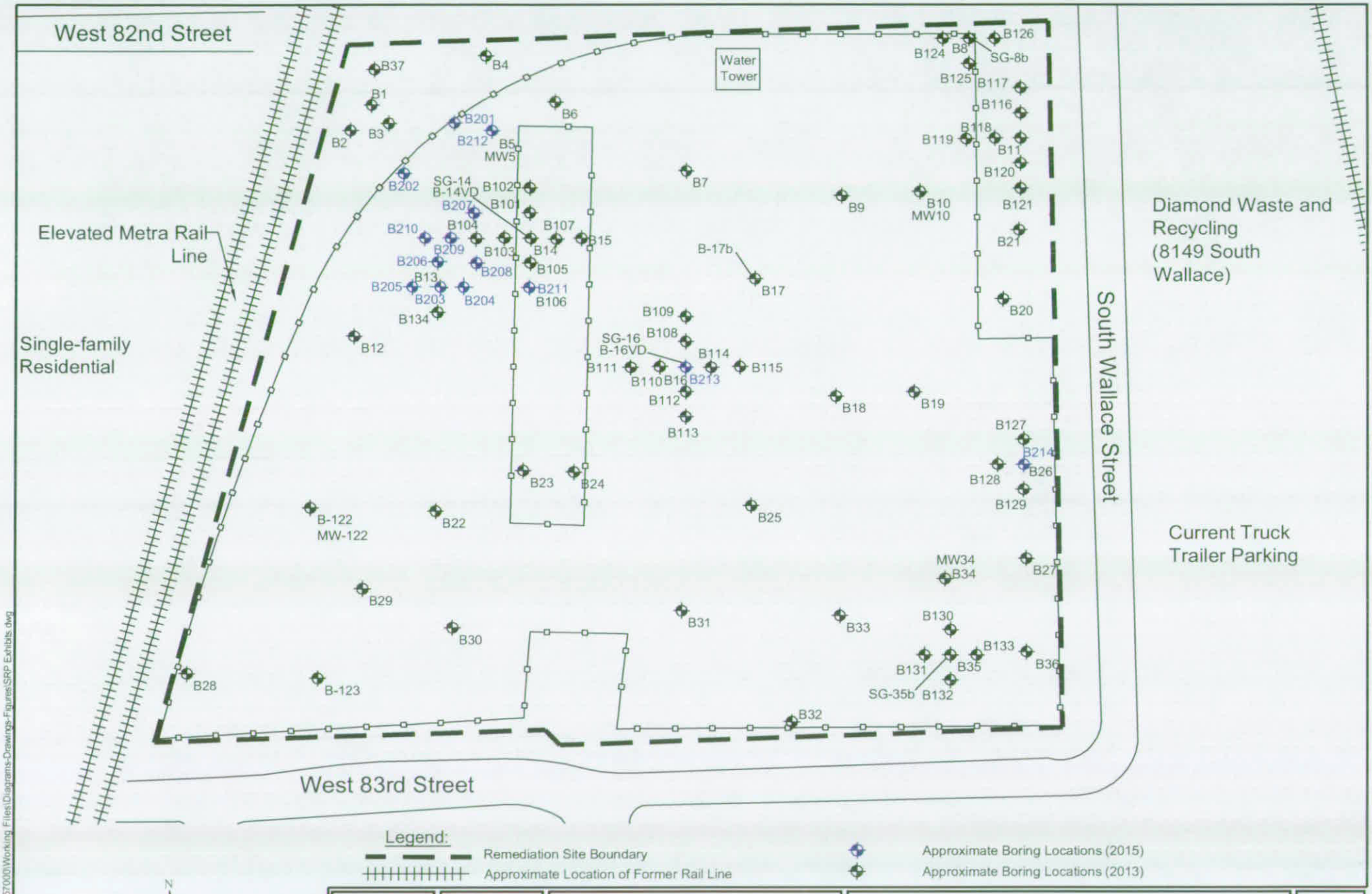

Project Mngr:	RMO
Drawn By:	SDM
Checked By:	RMO
Approved By:	RMO
Project No:	A2157000
Scale:	AS-SHOWN
Revised By:	-
Date:	March 2 , 2015

Terracon
Consulting Engineers and Scientists
650 W. LAKE ST., SUITE 420 CHICAGO, ILLINOIS 60661
PH: (312) 575-0014 FAX: (312) 575-0111

BORING LOCATION DIAGRAM

650 WEST 83RD STREET
CHICAGO, COOK COUNTY, ILLINOIS

EXHIBIT 3A

N:\Projects\2015\A2157000\Working Files\Diagrams-Drawings-Figures\SRP Exhibits.dwg

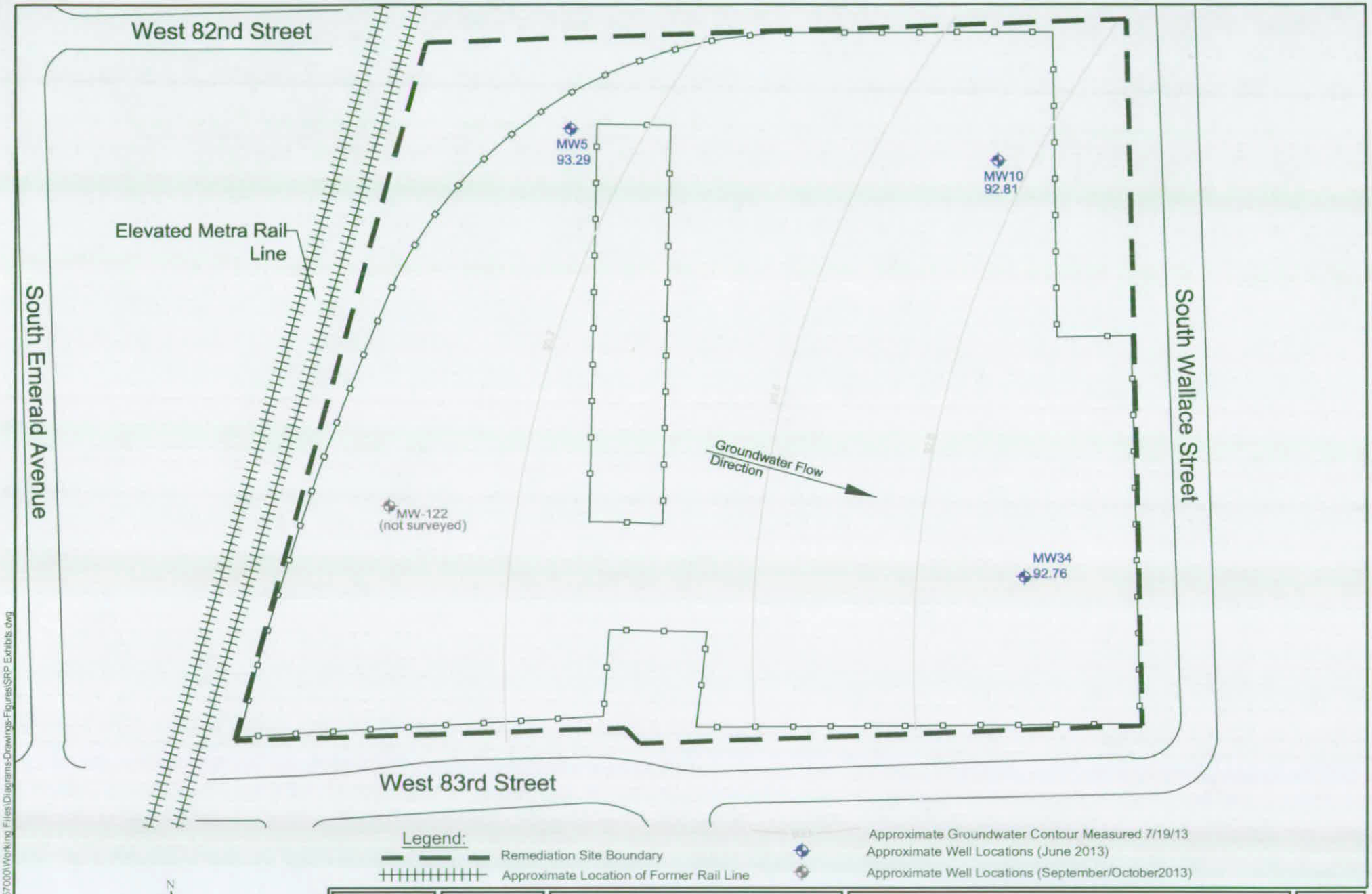

Project Mngr:	RMO
Drawn By:	SDM
Checked By:	RMO
Approved By:	RMO
Project No.	A2157000
Scale:	AS-SHOWN
Revised By:	-
Date:	March 2, 2015

Terracon
Consulting Engineers and Scientists
650 W. LAKE ST., SUITE 420 CHICAGO, ILLINOIS 60661
PH. (312) 575-0014 FAX. (312) 575-0111

WELL & GROUNDWATER CONTOUR DIAGRAM

650 WEST 83RD STREET
CHICAGO, COOK COUNTY, ILLINOIS

EXHIBIT
3B

N:\Projects\2015\A2157000\Working Files\Diagrams-Drawings-Figures\SRP Exhibits.dwg

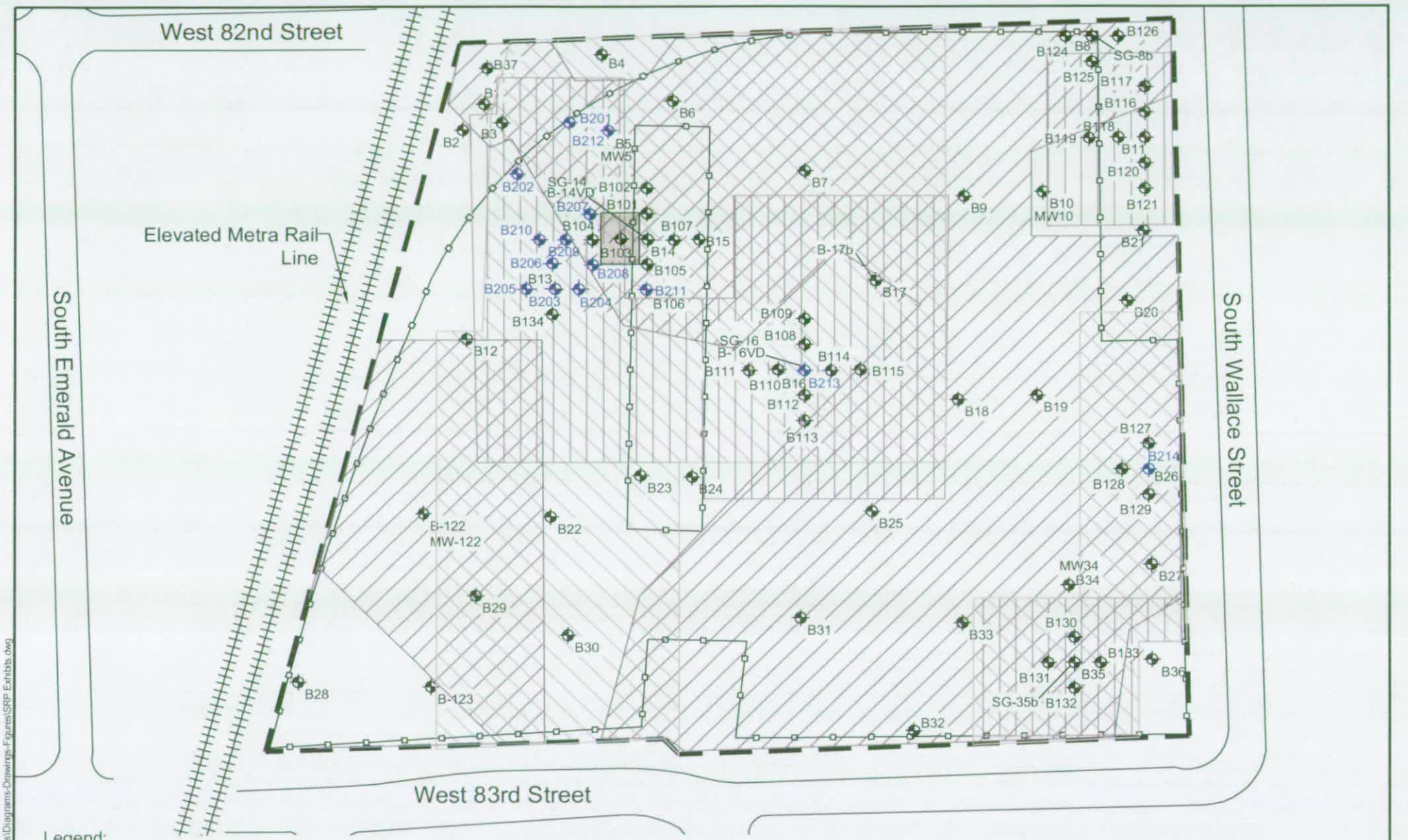

Project Mngr:	RMO
Drawn By:	SDM
Checked By:	RMO
Approved By:	RMO
Project No:	A2157000
Scale:	AS-SHOWN
Revised By:	-
Date:	March 2, 2015

Terracon
Consulting Engineers and Scientists
650 W. LAKE ST., SUITE 420 CHICAGO, ILLINOIS 60661
PH. (312) 575-0014 FAX. (312) 575-0111

INDUSTRIAL / COMMERCIAL EXCEEDANCES

650 WEST 83RD STREET
CHICAGO, COOK COUNTY, ILLINOIS

EXHIBIT
4

N:\Projects\2015\A2157000\Working Files\Diagrams-Drawings-Figures\SRP Exhibits.dwg

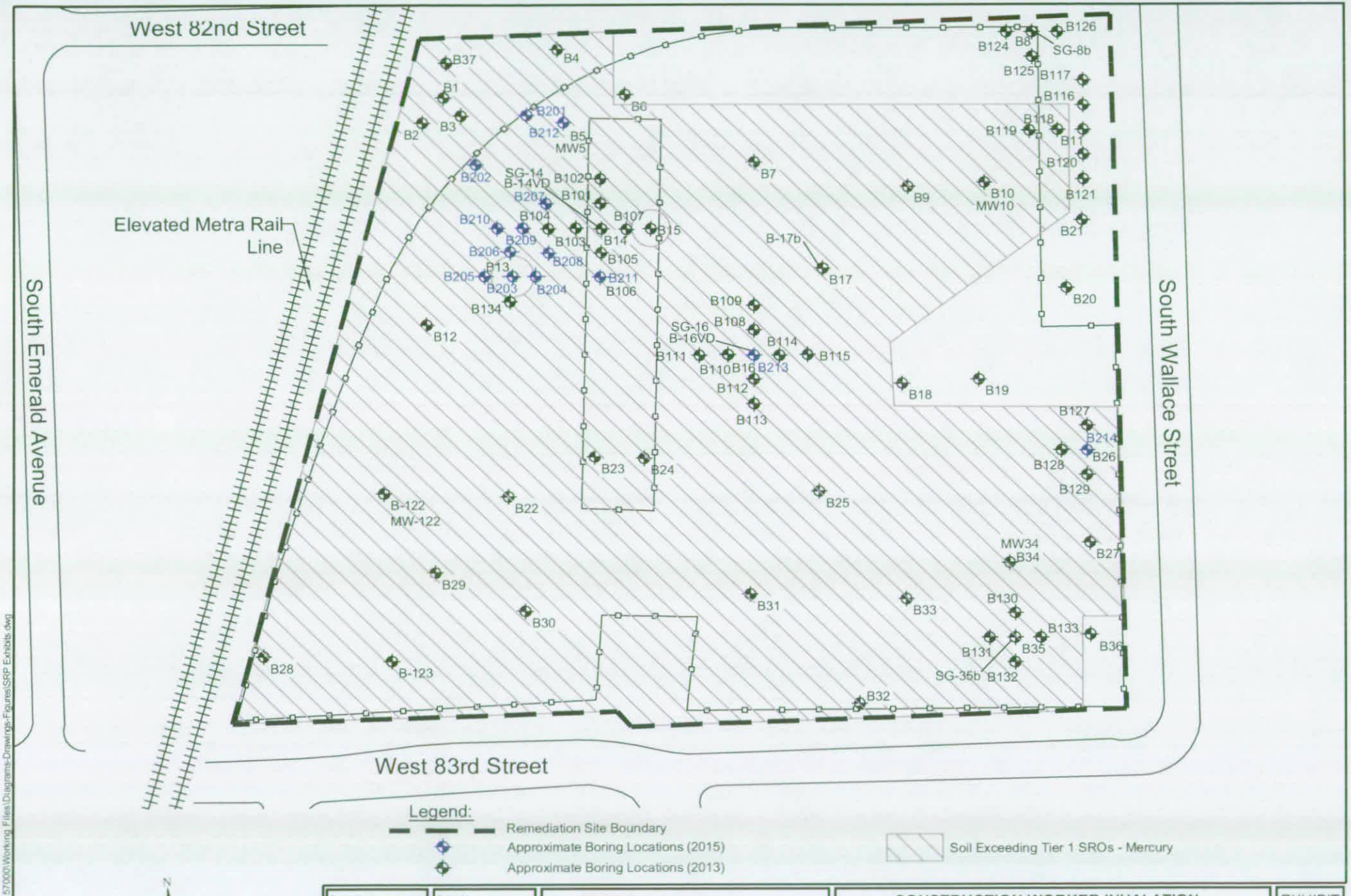

Project Mngr:	RMO
Drawn By:	SDM
Checked By:	RMO
Approved By:	RMO
Project No:	A2157000
Scale:	AS-SHOWN
Revised By:	-
Date:	March 2, 2015

Terracon
Consulting Engineers and Scientists
650 W. LAKE ST., SUITE 420 CHICAGO, ILLINOIS 60661
PH. (312) 575-0014 FAX. (312) 575-0111

CONSTRUCTION WORKER INHALATION EXCEEDANCES

650 WEST 83RD STREET
CHICAGO, COOK COUNTY, ILLINOIS

EXHIBIT 5

N:\Projects\2015\A2157000\Working Files\Diagrams-Figures\SRP Exhibits.dwg

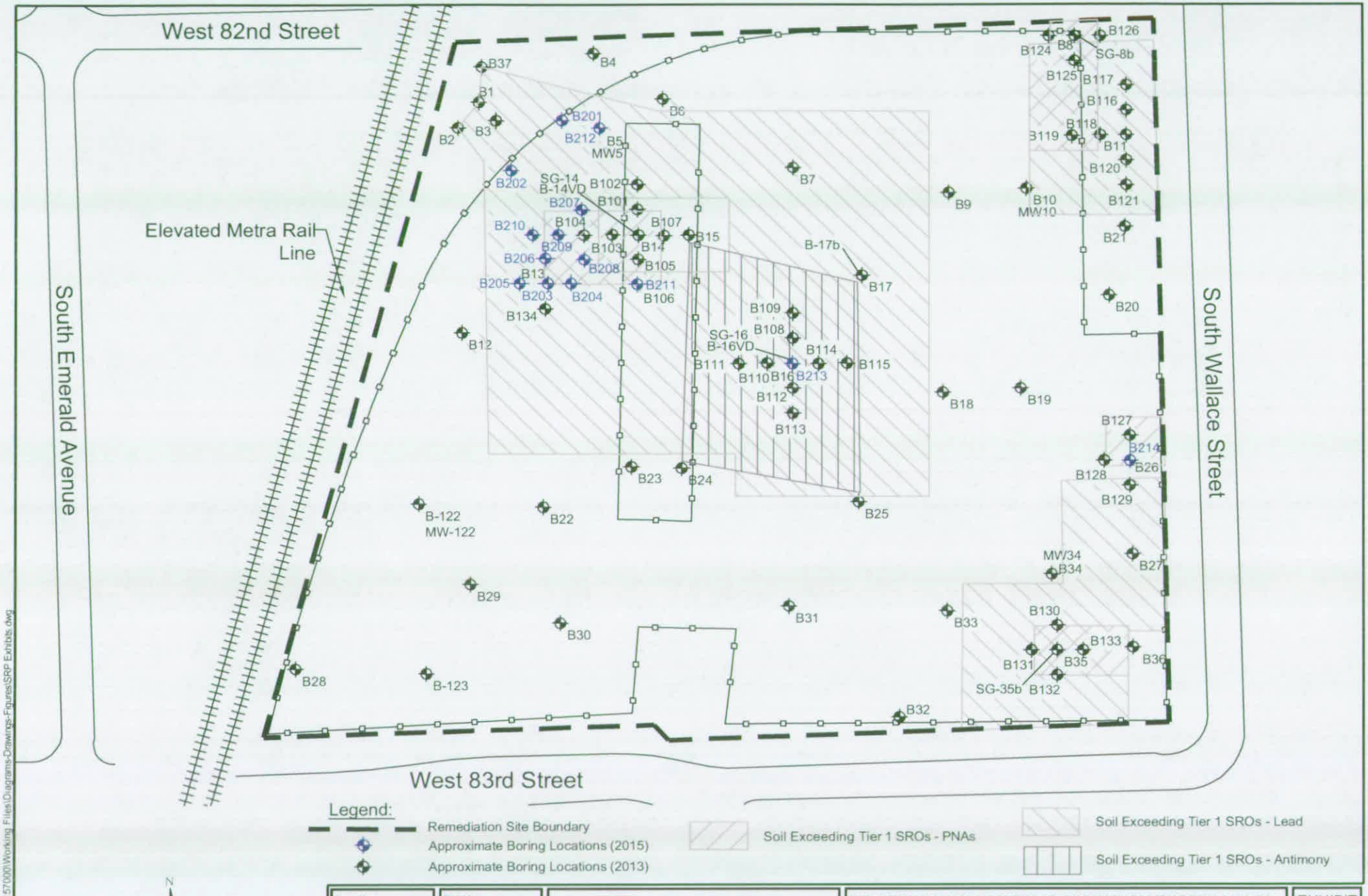

Project Mngr:	RMO
Drawn By:	SDM
Checked By:	RMO
Approved By:	RMO
Project No:	A2157000
Scale:	AS-SHOWN
Revised By:	–
Date:	March 2, 2015

Terracon
Consulting Engineers and Scientists
650 W. LAKE ST., SUITE 420 CHICAGO, ILLINOIS 60661
PH: (312) 575-0014 FAX: (312) 575-0111

CONSTRUCTION WORKER INGESTION EXCEEDANCES

650 WEST 83RD STREET
CHICAGO, COOK COUNTY, ILLINOIS

EXHIBIT 6

N:\Projects\2015\A2157000\Working Files\Diagrams-Drawings-Figures\SRP Exhibits.dwg

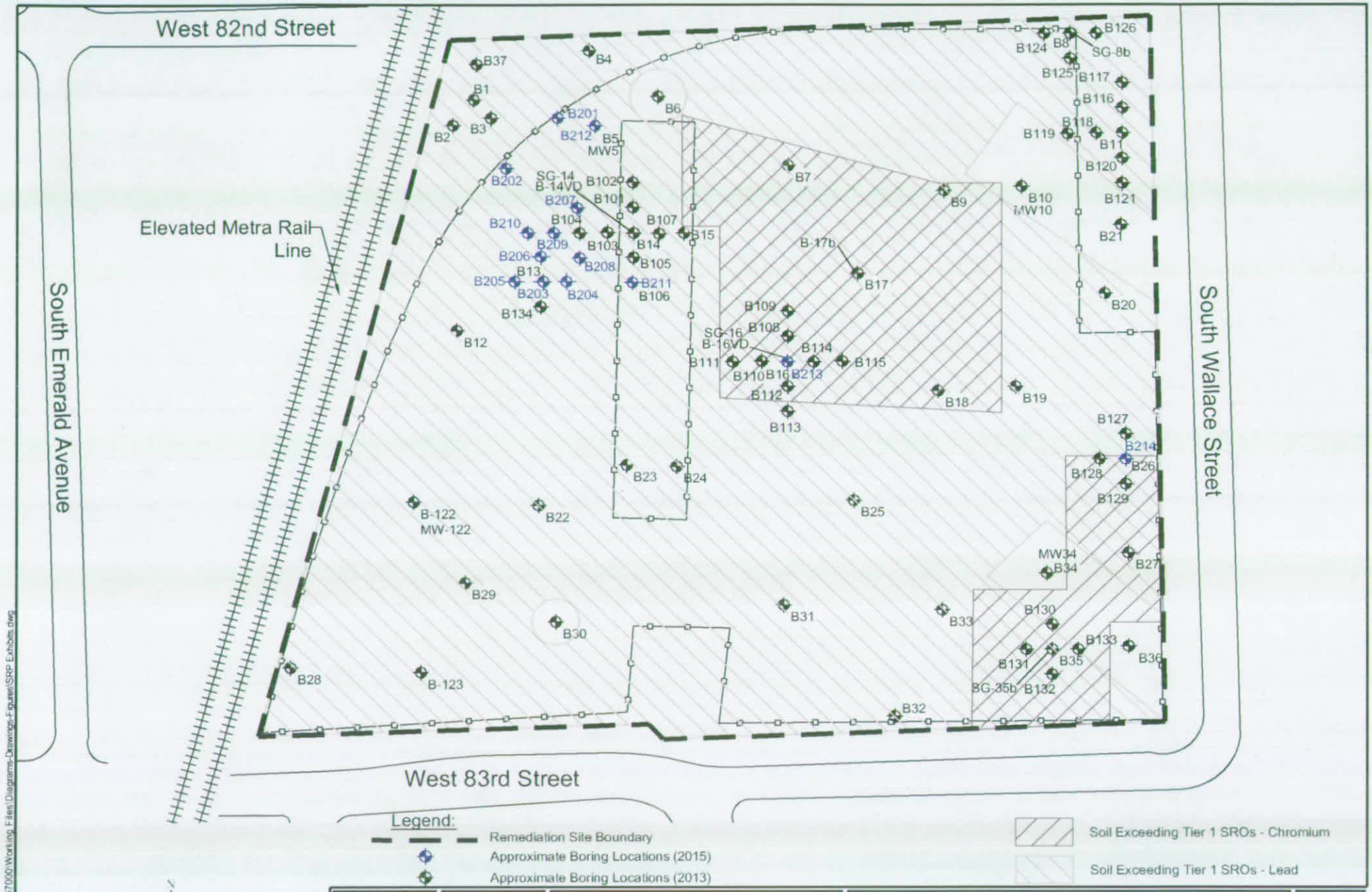

N:\Projects\2015\A2157000\Working Files\Diagrams-Drawings-Figures\SRP Exhibits.dwg

Project Mngr	RMO
Drawn By	SDM
Checked By	RMO
Approved By	RMO
Project No	A2157000
Scale	AS-SHOWN
Revised By	-
Date	March 2, 2015

Terracon
Consulting Engineers and Scientists
650 W. LAKE ST., SUITE 420 CHICAGO, ILLINOIS 60661
PH: (312) 575-0014 FAX: (312) 575-0111

SOIL COMPONENT TO GROUNDWATER EXCEEDANCES 1

650 WEST 83RD STREET
CHICAGO, COOK COUNTY, ILLINOIS

EXHIBIT
7A

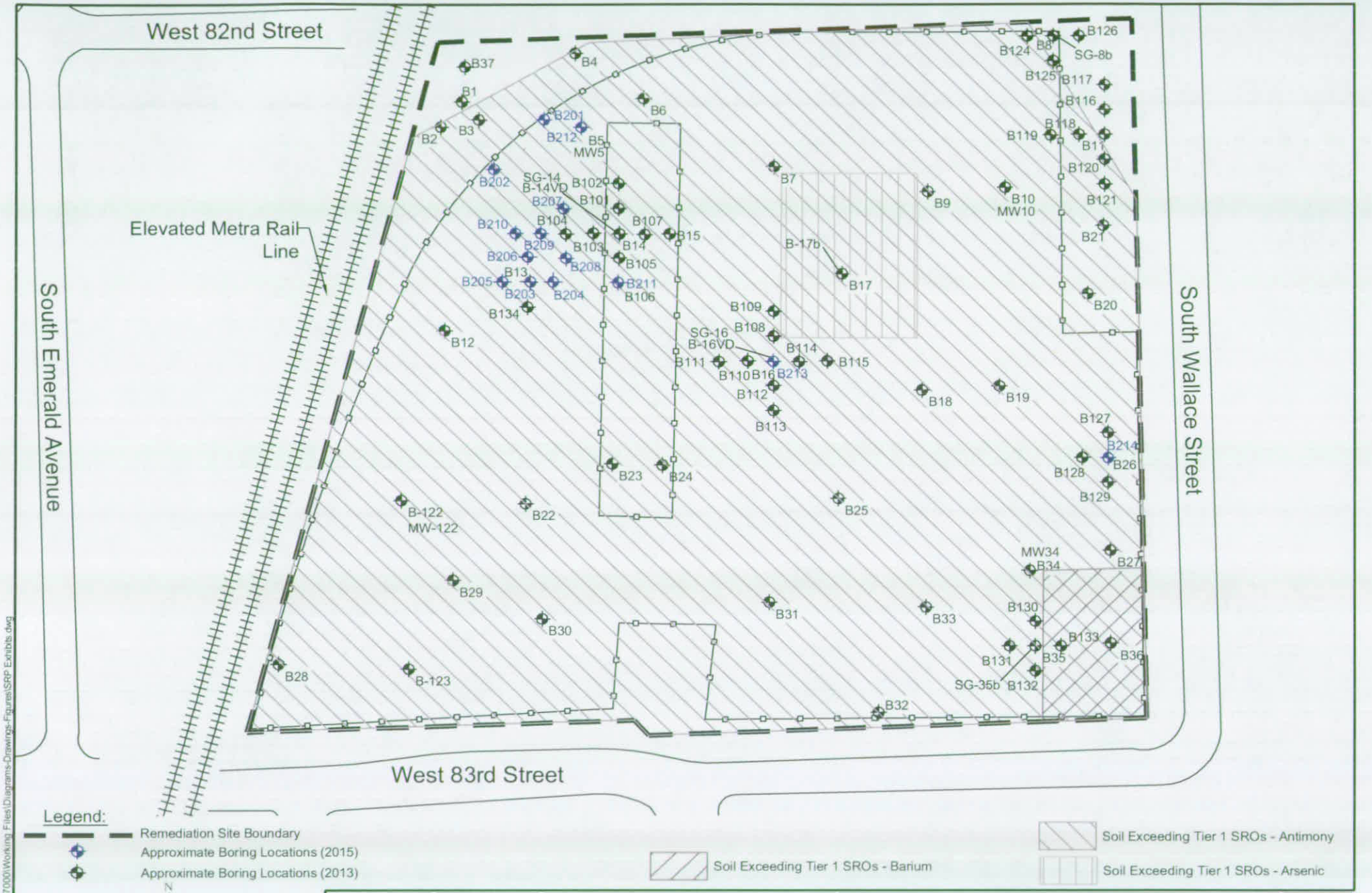

Legend:

- Remediation Site Boundary
- Approximate Boring Locations (2015)
- Approximate Boring Locations (2013)
- Soil Exceeding Tier 1 SROs - Barium
- Soil Exceeding Tier 1 SROs - Antimony
- Soil Exceeding Tier 1 SROs - Arsenic

N

0 120'

APPROXIMATE SCALE

Project Mngr:	RMO
Drawn By:	SDM
Checked By:	RMO
Approved By:	RMO
Project No:	A2157000
Scale:	AS-SHOWN
Revised By:	–
Date:	March 2, 2015

Terracon
Consulting Engineers and Scientists
650 W. LAKE ST., SUITE 420 CHICAGO, ILLINOIS 60661
PH. (312) 575-0014 FAX. (312) 575-0111

SOIL COMPONENT TO GROUNDWATER EXCEEDANCES 2

650 WEST 83RD STREET
CHICAGO, COOK COUNTY, ILLINOIS

EXHIBIT
7B

N:\Projects\2015\A2157000\Working Files\Diagrams-Drawings-Figures\SRP Exhibits.dwg

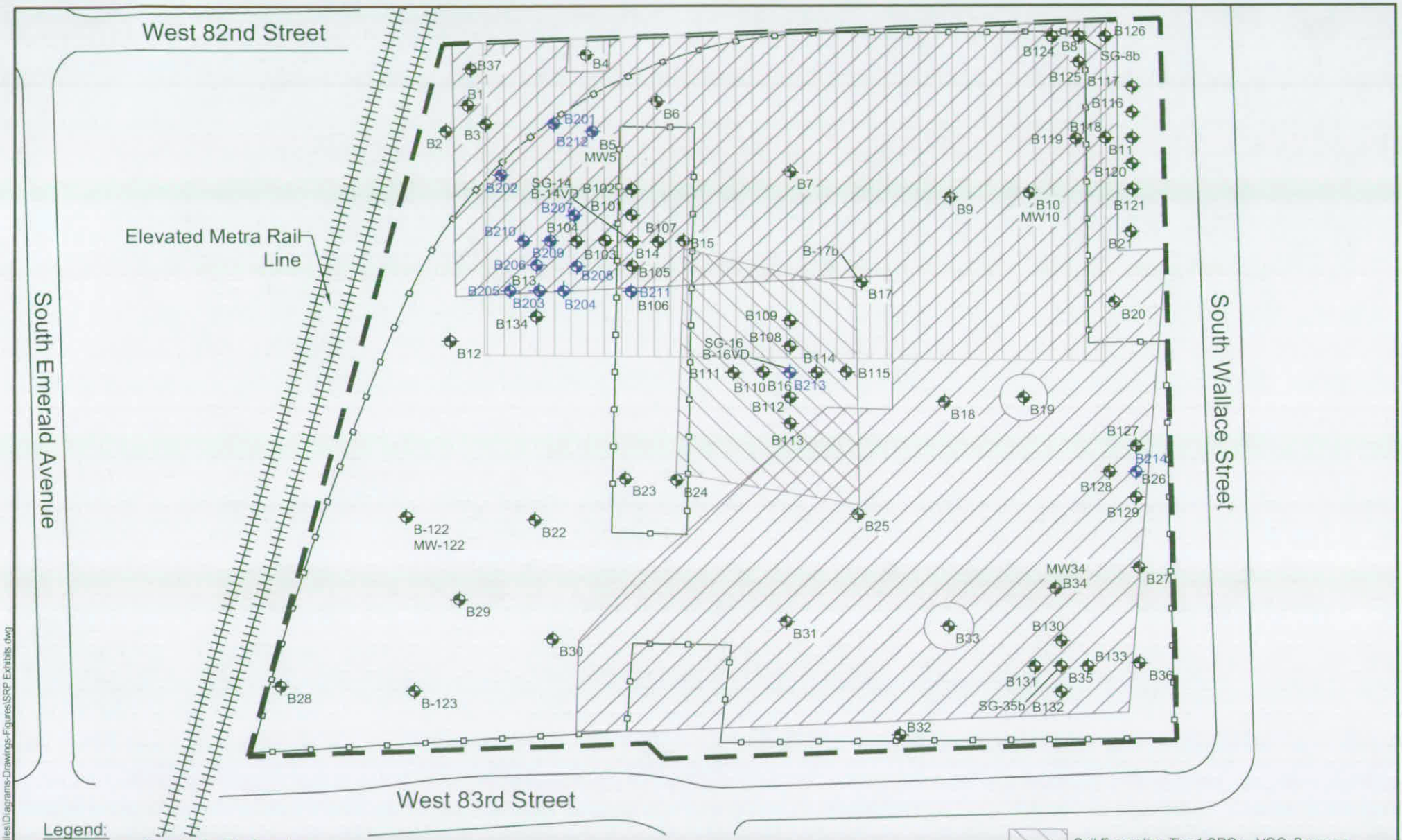

N:\Projects\2015\A2157000\Working Files\Diagrams-Drawings-Figures\SRP Exhibits.dwg

Project Mngr:	RMO
Drawn By:	SDM
Checked By:	RMO
Approved By:	RMO
Project No:	A2157000
Scale:	AS-SHOWN
Revised By:	–
Date:	March 2, 2015

Terracon
Consulting Engineers and Scientists
650 W. LAKE ST., SUITE 420 CHICAGO, ILLINOIS 60661
PH (312) 575-0014 FAX (312) 575-0111

SOIL COMPONENT TO GROUNDWATER EXCEEDANCES 3

650 WEST 83RD STREET
CHICAGO, COOK COUNTY, ILLINOIS

EXHIBIT
7C

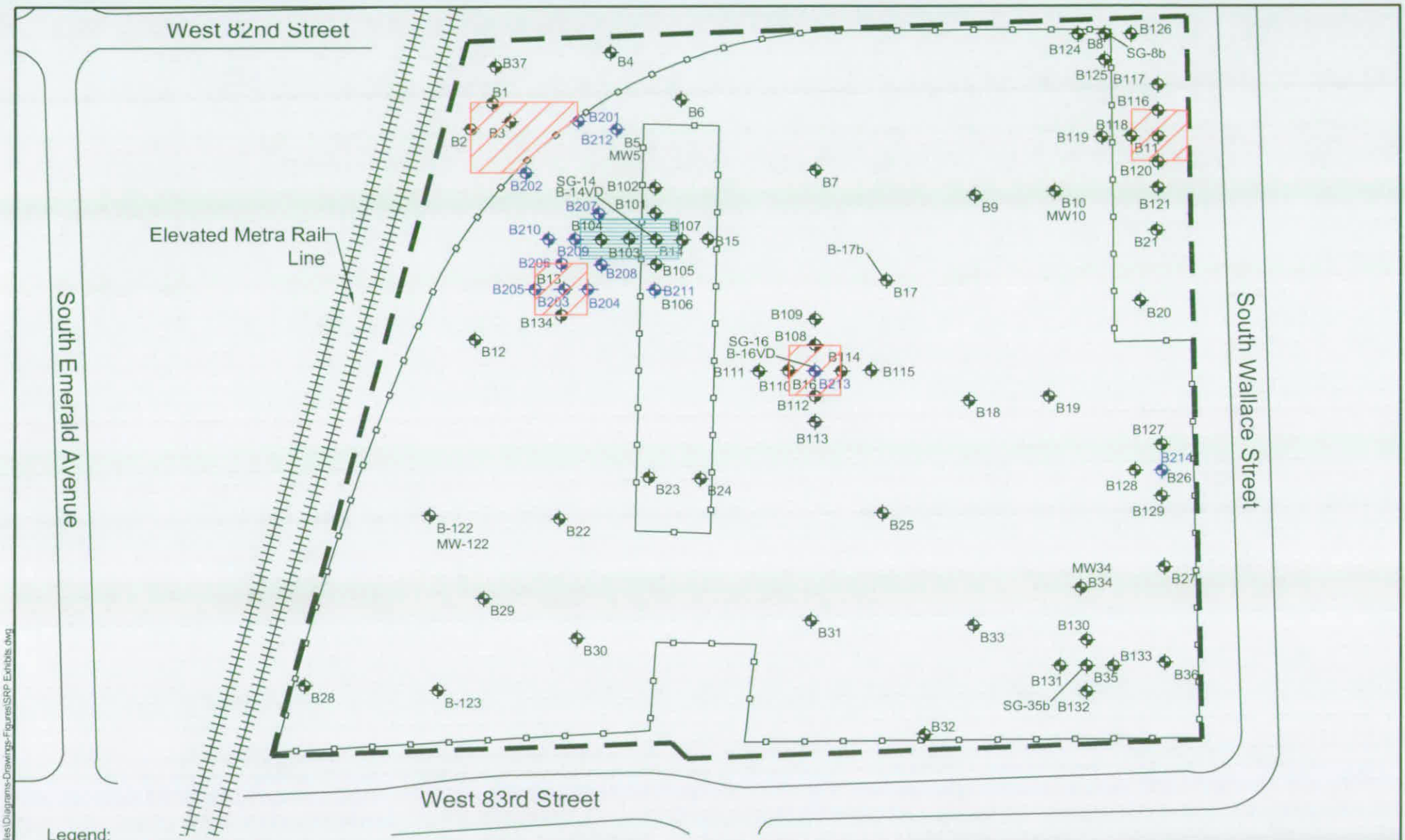

Legend:

- Remediation Site Boundary
- Approximate Boring Locations (2015)
- Approximate Boring Locations (2013)
- Approximate Extent of Soil Exceeding TCLP Hazardous Waste Criteria - Lead
- Approximate Extent of Subsurface Soil Exceeding Attenuation Capacity

N

0 100'

APPROXIMATE SCALE

Project Mngr:	RMO
Drawn By:	SDM
Checked By:	RMO
Approved By:	RMO
Project No:	A2157000
Scale:	AS-SHOWN
Revised By:	RMO
Date:	March 2, 2015

Terracon
Consulting Engineers and Scientists
650 W. LAKE ST., SUITE 420 CHICAGO, ILLINOIS 60661
PH: (312) 575-0014 FAX: (312) 575-0111

HAZARDOUS WASTE LEAD AND PNA ATTENUATION EXCEEDANCE AREAS

650 WEST 83RD STREET
CHICAGO, COOK COUNTY, ILLINOIS

EXHIBIT 8

N:\Projects\2015\A2157000\Working Files\Diagrams-Drawings-Figures\SRP Exhibits.dwg

TABLES

Soil Laboratory Analytical Methods
650 West 83rd Street, Chicago, IL
Project Number:A2157000

Sample Number/ Location	Sample Date	Analyses																				
		BTEX Method 5035/8260B	VOCs Method 5035/8260B	PNAs Method 8270C	SVOCs Method 8270C	RCRA Metals Method 6020/7470A	TAL Inorganics Method 6020/7470A	Arsenic Method 6020/7470A	Lead Method 6020/7470A	Pesticides Method 8081B,	PCBs Method 8082A,	Herbicides Method 8321A,	TCLP Method 1311/6020 (Lead)	SPLP Metals 1311/6020 (Aluminum)	SPLP Metals 1311/6020 (Antimony)	SPLP Metals 1311/6020 (Arsenic)	SPLP Metals 1311/6020 (Barium)	SPLP Metals 1311/6020 (Cobalt)	SPLP Metals 1311/6020 (Iron)	SPLP Metals 1311/6020 (Lead)	SPLP Metals 1311/6020 (Nickel)	SPLP Metals 1311/6020 (Selenium)
B-1 (1-3)	6/27/2013		X		X		X			X	X	X										
B-1 (4-6)	6/27/2013		X		X		X			X	X	X										
B-2 (1-3)	6/27/2013	X		X		X																
B-2 (6-8)	6/27/2013	X		X		X																
B-3 (1-3)	6/27/2013	X		X		X																
B-3 (4-6)	6/27/2013	X		X		X							X									
B-4 (1-3)	6/27/2013	X		X		X																
B-4 (4-6)	6/27/2013	X		X		X																
B-5 (1-3)	6/25/2013	X		X		X							X									
B-5 (4-6)	6/25/2013	X		X		X																
B-6 (1-3)	6/25/2013	X		X		X																
B-6 (6-8)	6/25/2013	X		X		X																
B-7 (1-3)	6/27/2013	X		X		X																
B-7 (4-6)	6/27/2013	X		X		X																
B-8 (1-3)	6/26/2013	X		X		X																
B-8 (4-6)	6/26/2013		X		X		X			X	X	X										
B-9 (1-3)	6/26/2013	X		X		X																
B-9 (4-6)	6/26/2013	X		X		X																
B-10 (1-3)	6/25/2013	X		X		X																
B-10 (4-6)	6/25/2013	X		X		X																
B-11 (1-3)	6/27/2013	X		X		X							X									
B-11 (4-6)	6/27/2013		X		X		X			X	X	X	X									
B-12 (1-3)	6/28/2013	X		X		X																
B-12 (4-6)	6/28/2013	X		X		X																
B-13 (1-3)	6/28/2013	X		X		X																
B-13 (4-6)	6/28/2013	X		X		X							X									

Soil Laboratory Analytical Methods
650 West 83rd Street, Chicago, IL
Project Number:A2157000

Sample Number/ Location	Sample Date	Analyses																				
		BTEX Method 5035/8260B	VOCs Method 5035/8260B	PNAs Method 8270C	SVOCs Method 8270C	RCRA Metals Method 6020/7470A	TAL Inorganics Method 6020/7470A	Arsenic Method 6020/7470A	Lead Method 6020/7470A	Pesticides Method 8081B,	PCBs Method 8082A,	Herbicides Method 8321A,	TCLP Method 1311/6020 (Lead)	SPLP Metals 1311/6020 (Aluminum)	SPLP Metals 1311/6020 (Antimony)	SPLP Metals 1311/6020 (Arsenic)	SPLP Metals 1311/6020 (Barium)	SPLP Metals 1311/6020 (Cobalt)	SPLP Metals 1311/6020 (Iron)	SPLP Metals 1311/6020 (Lead)	SPLP Metals 1311/6020 (Nickel)	SPLP Metals 1311/6020 (Selenium)
B-14 (1-3)	6/27/2013	X		X		X																
B-14 (6-8)	6/27/2013	X		X		X																
B-14VD (8-10)	9/26/2013	X		X																		
B-15 (1-3)	6/27/2013	X		X		X																
B-15 (4-6)	6/27/2013		X	X		X																
B-16 (1-3)	6/27/2013		X		X		X			X	X	X*										
B-16 (4-6)	6/27/2013		X		X		X			X	X	X*	X									
B-16VD (8-10)	9/26/2013												X									
B-17 (1-3)	6/26/2013	X		X		X							X									
B-17 (4-6)	6/26/2013	X		X		X																
B-18 (1-3)	6/26/2013		X	X		X																
B-18 (4-6)	6/26/2013	X		X		X																
B-19 (1-3)	6/26/2013	X		X		X																
B-19 (4-6)	6/26/2013	X		X		X																
B-20 (1-3)	6/27/2013		X		X		X			X	X	X										
B-20 (4-6)	6/27/2013	X		X		X																
B-21 (1-3)	6/27/2013	X		X		X																
B-21 (4-6)	6/27/2013	X		X		X																
B-22 (1-3)	6/28/2013																					
B-22 (4-6)	6/28/2013																					
B-23 (1-3)	6/27/2013																					
B-23 (4-6)	6/27/2013																					
B-24 (1-3)	6/27/2013	X		X		X																
B-24 (6-8)	6/27/2013	X		X		X																
B-25 (1-3)	6/26/2013	X		X		X																
B-25 (4-6)	6/26/2013	X		X		X																

Soil Laboratory Analytical Methods
650 West 83rd Street, Chicago, IL
Project Number:A2157000

Sample Number/ Location	Sample Date	Analyses																				
		BTEX Method 5035/8260B	VOCs Method 5035/8260B	PNAs Method 8270C	SVOCs Method 8270C	RCRA Metals Method 6020/7470A	TAL Inorganics Method 6020/7470A	Arsenic Method 6020/7470A	Lead Method 6020/7470A	Pesticides Method 8081B,	PCBs Method 8082A,	Herbicides Method 8321A,	TCLP Method 1311/6020 (Lead)	SPLP Metals 1311/6020 (Aluminum)	SPLP Metals 1311/6020 (Antimony)	SPLP Metals 1311/6020 (Arsenic)	SPLP Metals 1311/6020 (Barium)	SPLP Metals 1311/6020 (Cobalt)	SPLP Metals 1311/6020 (Iron)	SPLP Metals 1311/6020 (Lead)	SPLP Metals 1311/6020 (Nickel)	SPLP Metals 1311/6020 (Selenium)
B-26 (1-3)	6/26/2013	X		X		X																
B-26 (6-8)	6/26/2013	X		X		X																
B-27 (1-3)	6/26/2013	X		X		X																
B-27 (6-8)	6/26/2013	X		X		X																
B-28 (1-3)	6/28/2013	X		X		X																
B-28 (4-6)	6/28/2013	X		X		X																
B-29 (1-3)	6/28/2013	X		X		X																
B-29 (4-6)	6/28/2013	X		X		X																
B-30 (1-3)	6/28/2013	X		X		X																
B-30 (4-6)	6/28/2013	X		X		X																
B-31 (1-3)	6/27/2013	X		X		X																
B-31 (6-8)	6/27/2013	X		X		X																
B-32 (1-3)	6/26/2013	X		X		X																
B-32 (6-8)	6/26/2013	X		X		X																
B-33 (1-3)	6/26/2013	X		X		X																
B-33 (4-6)	6/26/2013		X	X		X																
B-34 (1-3)	6/25/2013		X		X		X			X	X	X										
B-34 (4-6)	6/25/2013	X		X		X																
B-35 (1-3)	6/26/2013	X		X		X																
B-35 (4-6)	6/26/2013	X		X		X																
B-36 (1-3)	6/26/2013	X		X		X																
B-36 (4-6)	6/26/2013	X		X		X																
B-37 (1-3)	6/27/2013	X		X		X																
B-37 (6-8)	6/27/2013	X		X		X																
B-101 (6-8)	9/27/2013	X		X																		
B-103 (6-8)	9/27/2013	X		X																		

Soil Laboratory Analytical Methods
650 West 83rd Street, Chicago, IL
Project Number:A2157000

Sample Number/ Location	Sample Date	Analyses																				
		BTEX Method 5035/8260B	VOCs Method 5035/8260B	PNAs Method 8270C	SVOCs Method 8270C	RCRA Metals Method 6020/7470A	TAL Inorganics Method 6020/7470A	Arsenic Method 6020/7470A	Lead Method 6020/7470A	Pesticides Method 8081B,	PCBs Method 8082A,	Herbicides Method 8321A,	TCLP Method 1311/6020 (Lead)	SPLP Metals 1311/6020 (Aluminum)	SPLP Metals 1311/6020 (Antimony)	SPLP Metals 1311/6020 (Arsenic)	SPLP Metals 1311/6020 (Barium)	SPLP Metals 1311/6020 (Cobalt)	SPLP Metals 1311/6020 (Iron)	SPLP Metals 1311/6020 (Lead)	SPLP Metals 1311/6020 (Nickel)	SPLP Metals 1311/6020 (Selenium)
B-104 (6-8)	9/27/2013			X																		
B-105 (6-8)	9/27/2013	X		X																		
B-106 (6-8)	9/27/2013												X									
B-107 (6-8)	9/27/2013	X		X																		
B-108 (6-8)	9/26/2013												X									
B-108B(4-6)	10/23/2013												X									
B-110 (6-8)	9/26/2013												X									
B-110B (4-6)	10/23/2013												X									
B-112 (6-8)	9/26/2013												X									
B-112B (4-6)	10/23/2013												X									
B-114 (6-8)	9/26/2013												X									
B-114B(4-6)	10/23/2013												X									
B-116 (6-8)	9/27/2013												X									
B-116B(1-3)	10/23/2013												X									
B-118 (6-8)	9/27/2013												X									
B-118B(1-3)	10/23/2013												X									
B-119 (1-3)	9/27/2013								X													
B-119 (6-8)	9/27/2013								X													
B-120 (6-8)	9/27/2013												X									
B-120B(1-3)	10/23/2013												X									
B-122 (1-3)	9/26/2013			X																		
B-122 (4-6)	9/26/2013							X														
B-123 (1-3)	9/26/2013			X																		
B-123 (4-6)	9/26/2013							X														
B-124 (1-3)	9/27/2013			X																		
B-124 (4-6)	9/27/2013			X																		

Soil Laboratory Analytical Methods
650 West 83rd Street, Chicago, IL
Project Number:A2157000

Sample Number/ Location	Sample Date	Analyses																				
		BTEX Method 5035/8260B	VOCs Method 5035/8260B	PNAs Method 8270C	SVOCs Method 8270C	RCRA Metals Method 6020/7470A	TAL Inorganics Method 6020/7470A	Arsenic Method 6020/7470A	Lead Method 6020/7470A	Pesticides Method 8081B,	PCBs Method 8082A,	Herbicides Method 8321A,	TCLP Method 1311/6020 (Lead)	SPLP Metals 1311/6020 (Aluminum)	SPLP Metals 1311/6020 (Antimony)	SPLP Metals 1311/6020 (Arsenic)	SPLP Metals 1311/6020 (Barium)	SPLP Metals 1311/6020 (Cobalt)	SPLP Metals 1311/6020 (Iron)	SPLP Metals 1311/6020 (Lead)	SPLP Metals 1311/6020 (Nickel)	SPLP Metals 1311/6020 (Selenium)
B-125 (1-3)	9/27/2013			X																		
B-125 (4-6)	9/27/2013			X																		
B-126 (1-3)	9/27/2013			X																		
B-126 (4-6)	9/27/2013			X																		
B-127 (1-3)	9/27/2013			X																		
B-128 (1-3)	9/27/2013			X																		
B-129 (1-3)	9/27/2013			X																		
B-130 (1-3)	9/27/2013			X																		
B-130 (4-6)	9/27/2013			X																		
B-131 (1-3)	9/27/2013			X																		
B-131 (4-6)	9/27/2013			X																		
B-132 (1-3)	9/27/2013			X																		
B-132 (4-6)	9/27/2013			X																		
B-133 (1-3)	9/27/2013			X																		
B-133 (4-6)	9/27/2013			X																		
B-134 (4-6)	10/23/2013												X									
B-201 (4-6')	02/20/2015												X									
B-202 (4-6')	02/20/2015												X									
B-203 (6-8')	02/20/2015												X									
B-204 (4-6')	02/20/2015												X									
B-205 (4-6')	02/20/2015												X									
B-206 (4-6')	02/20/2015												X									
B-207 (6-8')	02/20/2015			X																		
B-208 (6-8')	02/20/2015			X																		
B-209 (6-8')	02/20/2015			X																		
B-211 (6-8')	02/20/2015																			X		

Soil Laboratory Analytical Methods
650 West 83rd Street, Chicago, IL
Project Number:A2157000

Sample Number/ Location	Sample Date	Analyses																				
		BTEX Method 5035/8260B	VOCs Method 5035/8260B	PNAs Method 8270C	SVOCs Method 8270C	RCRA Metals Method 6020/7470A	TAL Inorganics Method 6020/7470A	Arsenic Method 6020/7470A	Lead Method 6020/7470A	Pesticides Method 8081B,	PCBs Method 8082A,	Herbicides Method 8321A,	TCLP Method 1311/6020 (Lead)	SPLP Metals 1311/6020 (Aluminum)	SPLP Metals 1311/6020 (Antimony)	SPLP Metals 1311/6020 (Arsenic)	SPLP Metals 1311/6020 (Barium)	SPLP Metals 1311/6020 (Cobalt)	SPLP Metals 1311/6020 (Iron)	SPLP Metals 1311/6020 (Lead)	SPLP Metals 1311/6020 (Nickel)	SPLP Metals 1311/6020 (Selenium)
B-212 (1-3')	02/20/2015																X					X
B-213 (1-3')	02/20/2015													X				X			X	
B-213 (4-6')	02/20/2015														X				X			
B-214 (1-3')	02/20/2015															X						X

X* - Herbicides - B-16(1-3) and B-16(4-6) analysed only for 4-Nitrophenol and Pentachlorophenol

Sampling Plan (2015)
Terracon project: A2157000
650 West 83rd Street
Chicago, IL

Sampling plan for 650 W. 83rd Street

Drilling Event **2/20/2015**

A2157000 **Task 2** **14-2FMEHS-00020**

Sample ID	Sample Interval			
SOIL	Surface (0-3')	Subsurface	Probe Depth	Purpose
B201	--	TCLP Lead (4-6')	8	TCLP Lead East Horizontal Delineation for B3 Moved inside fence
B202	--	TCLP Lead (4-6')	8	TCLP Lead South Horizontal Delineation for B3 Moved inside fence
B203 (B13)	--	TCLP Lead (6-8')	12	TCLP Lead Vertical Delineation for B13 [Model Soil Comp. Analysis for B13 Selenium (4-6')]
B204	--	TCLP Lead (4-6')	8	East TCLP Lead Horizontal Delineation for B13
B205	--	TCLP Lead (4-6')	8	West TCLP Lead Horizontal Delineation for B13
B206	--	TCLP Lead (4-6')	8	North TCLP Lead Horizontal Delineation for B13
B207	--	WC (1-3') PNAs (6-8')	8	North Horizontal Delineation for B104 / Waste Characterization (WC) Composite
B208	--	PNAs (6-8')	8	South Horizontal Delineation for B104
B209	--	PNAs (6-8')	8	West Horizontal Delineation for B104
B211 (B106)	--	SPLP Lead (6-8')	8	To reduce the modeling distance for B106
B212 (B5)	--	SPLP Barium, Selenium (1-3')	4	Soil Component Analysis for B5
B213 (B16)	--	SPLP Aluminum, Cobalt, Nickel (1-3') SPLP Antimony, Iron (4-6')	8	Soil Component Analysis for B16
B214 (B26)	--	SPLP Selenium, Arsenic (1-3')	4	Soil Component Analysis for B26 (ph>9.0)

Change Order #1 - Revision 1
Sampling Plan for 650 W. 83rd Street

TOR 13-2FMBEM-00005, A2137008

9/5/2013

Sample ID	Sample Interval		
SOIL	0-3	Subsurface	Analysis
B14			Prior Sample 6-8' bgs exceeds Attenuation for PNAs *
B14VD	---	8-10'	PNAs, BTEX, TPH-DRO+GRO; Hold 10-12' & 12-14' NAPHTHALENE SOIL GAS SAMPLE (6')
B101	---	6-8'	PNAs, BTEX, TPH-DRO+GRO
B102	---	6-8'	Hold
B103	---	6-8'	PNAs, BTEX, TPH-DRO+GRO
B104	---	6-8'	Hold
B105	---	6-8'	PNAs, BTEX, TPH-DRO+GRO
B106	---	6-8'	Hold
B107	---	6-8'	PNAs, BTEX, TPH-DRO+GRO
B16			Prior Sample 4-6' bgs exceeds Hazardous Lead
B16VD	---	8-10'	TCLP Pb; Hold 10-12' & 12-14'; SOIL GAS SAMPLE FOR VOCs (3')
B108	---	6-8'	TCLP Pb
B109	---	6-8'	Hold
B110	---	6-8'	TCLP Pb
B111	---	6-8'	Hold
B112	---	6-8'	TCLP Pb
B113	---	6-8'	Hold
B114	---	6-8'	TCLP Pb
B115	---	6-8'	Hold
B11			Prior Sample 0-3' bgs exceeds Hazardous Lead
B11(4-6)	---	4-6	Sample at Lab with Total Lead at 320 mg/kg; run for TCLP Lead for Delineation
B116	---	6-8'	TCLP Pb
B117	---	6-8'	Hold
B118	---	6-8'	TCLP Pb
B119	1-3'	6-8'	Run 1-3' for Lead I/C ingestion Delineation; Hold 6-8'
B120	---	6-8'	TCLP Pb
B121	---	6-8'	Hold
B29			Try to Reduce Size of Plume west of B29 over I/C Ingestion for Aresenic & PNAs. If successful could reduce by 23,000 SF.
B122	PNAs	As - 4-6'	Arsenic, PNAs
B123	PNAs	As - 4-6'	Arsenic, PNAs
			POTENTIAL PURCHASER REQUESTS
B3	---	4-6'	TCLP Pb. Sample already in lab
B13	---	4-6'	TCLP Pb. Sample already in lab
B17	1-3'	---	TCLP Pb. Sample already in lab
B17b	---	4-6'	Elemental Mercury
B8b	1-3'	4-6'	TPH - B8 elevated PNA samples; NAPHTHALENE SOIL GAS SAMPLE (3')
B124	1-3'	4-6'	PNAs - B8 Surface/Subsurface Delineation
B125	1-3'	4-6'	PNAs - B8 Surface/Subsurface Delineation
B126	1-3'	4-6'	PNAs - B8 Surface/Subsurface Delineation
B26b	1-3'	---	TPH - B26 elevated PNA sample
B127	1-3'	---	PNAs - B26 Surface Delineation
B128	1-3'	---	PNAs - B26 Surface Delineation
B129	1-3'	---	PNAs - B26 Surface Delineation
B35b	1-3'	4-6'	TPH - B35 elevated PNA samples; NAPHTHALENE SOIL GAS SAMPLE (3')
B130	1-3'	4-6'	PNAs - B35 Surface/Subsurface Delineation
B131	1-3'	4-6'	PNAs - B35 Surface/Subsurface Delineation
B132	1-3'	4-6'	PNAs - B35 Surface/Subsurface Delineation
B133	1-3'	4-6'	PNAs - B35 Surface/Subsurface Delineation
MW5	NA		Resample Well for pH
MW10	NA		Resample Well for pH
MW34	NA		Resample Well for pH
MW122	NA		VOCs, SVOCs, pesticides/ PCBs, TAL inorganics, and pH

= Prior Sample Collected June 2013

* Attenuation delineation samples analyzed for TPH and all organic COCs identified as conservative measure

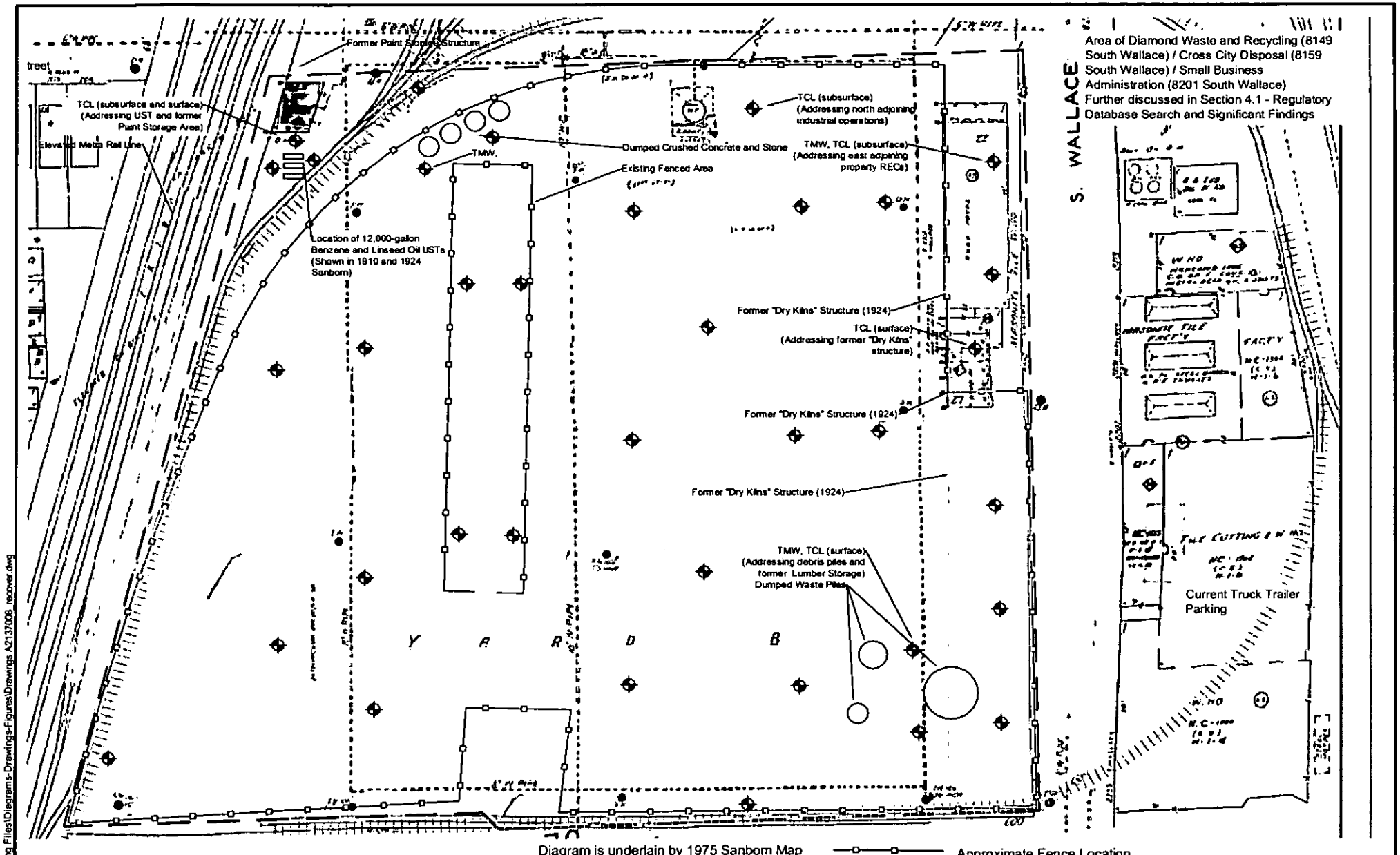

N:\Projects\2013\A2137008\Working Files\Diagrams-Drawings-Figures\Drawings\A2137008_recover.dwg

Project Mngr: RMO	Project No: A2137008	Terracon Consulting Engineers and Scientists	PROPOSED BORING LOCATION DIAGRAM 6/2013
Drawn By: CCD	Scale: AS-SHOWN	650 W. LAKE ST., SUITE 420 CHICAGO, ILLINOIS 60661 PH. (312) 575-0014 FAX. (312) 575-0111	PHASE I ENVIRONMENTAL SITE ASSESSMENT 650 WEST 83RD STREET CHICAGO, COOK COUNTY, ILLINOIS
Checked By: RMO	Revised By: -		EXHIBIT
Approved By: RMO	Date: June 2013		

DIAGRAM IS FOR GENERAL LOCATION ONLY, AND IS NOT INTENDED FOR CONSTRUCTION PURPOSES.

Table 1 - Terracon Soil Analytical Results - VOCs
650 West 83rd Street, Chicago, IL
Project Number:A2157000

Analyte	Units	IEPA Tier 1 Soil Remediation Objectives					Sample Identification	B-1 (1-3)	B-1 (4-6)	B-2 (1-3)	B-2 (6-8)	B-3 (1-3)
		Industrial/Commercial Properties		Construction Workers		Soil Component of the Groundwater Ingestion Route	Sample Depth (feet)	1' - 3'	4' - 6'	1' - 3'	6' - 8'	1' - 3'
		Ingestion	Inhalation	Ingestion	Inhalation	Class I	Date Collected	6/27/2013	6/27/2013	6/27/2013	6/27/2013	6/27/2013
Volatile Organic Analytical Parameters												
Benzene	mg/kg	100	1.60	2,300	2.2	0.03		< 0.0056	< 0.0056	< 0.0063	< 0.0049	< 0.0074
Toluene	mg/kg	410,000	650	410,000	42	12		< 0.0056	< 0.0056	< 0.0063	< 0.0049	< 0.0074
Ethylbenzene	mg/kg	200,000	400	20,000	58	13		< 0.0056	< 0.0056	< 0.0063	< 0.0049	< 0.0074
Xylenes (total)	mg/kg	410,000	320	41,000	5.6	150		< 0.017	< 0.017	< 0.019	< 0.015	< 0.022
Methyl Tertiary-Butyl Ether	mg/kg	20,000	8,800	2,000	140	0.32		< 0.0056	< 0.0056	--	--	--
Acetone	mg/kg	---	100,000	---	100,000	25		< 0.085	< 0.083	--	--	--
Bromodichloromethane	mg/kg	92	3,000	2,000	3,000	0.6		< 0.0056	< 0.0056	--	--	--
Bromoform	mg/kg	720	100	16,000	140	0.8		< 0.0056	< 0.0056	--	--	--
Bromomethane	mg/kg	2,900	15	1,000	3.9	0.2		< 0.011	< 0.011	--	--	--
2-Butanone	mg/kg	1,000,000	25,000	120,000	730	17		< 0.085	< 0.083	--	--	--
Carbon Disulfide	mg/kg	200,000	720	20,000	9.0	32		< 0.056	< 0.056	--	--	--
Carbon Tetrachloride	mg/kg	44	0.64	410	0.9	0.07		< 0.0056	< 0.0056	--	--	--
Chlorobenzene	mg/kg	41,000	210	4,100	1.3	1.0		< 0.0056	< 0.0056	--	--	--
Chloroethane	mg/kg	820,000	1,500	82,000	94	15		< 0.011	< 0.011	--	--	--
Chloroform	mg/kg	940	0.54	2,000	0.76	0.6		< 0.0056	< 0.0056	--	--	--
Chloromethane	mg/kg	8,200	170	820	1.1	0.14		< 0.011	< 0.011	--	--	--
cis-1,2-Dichloroethene	mg/kg	20,000	1,200	20,000	1,200	0.4		< 0.0056	< 0.0056	--	--	--
Dibromochloromethane	mg/kg	41,000	1,300	41,000	1,300	0.4		< 0.0056	< 0.0056	--	--	--
1,1-Dichloroethane	mg/kg	200,000	1,700	200,000	130	23		< 0.0056	< 0.0056	--	--	--
1,2-Dichloroethane	mg/kg	63	0.7	1,400	0.99	0.02		< 0.0056	< 0.0056	--	--	--
1,1-Dichloroethene	mg/kg	100,000	470	10,000	3.0	0.06		< 0.0056	< 0.0056	--	--	--
1,2-Dichloropropane	mg/kg	84	23	1,800	0.5	0.03		< 0.0056	< 0.0056	--	--	--
1,3-Dichloropropene (cis + trans)	mg/kg	57	2.1	1,200	0.39	*0.005*		< 0.0023	< 0.0022	--	--	--
2-Hexanone	mg/kg	82,000	110	8,200	0.72	1.3		< 0.023	< 0.022	--	--	--
4-Methyl-2-pentanone	mg/kg	---	3,100	---	340	2.5		< 0.023	< 0.022	--	--	--
Methylene Chloride	mg/kg	760	24	12,000	34	0.02		< 0.011	< 0.011	--	--	--
Styrene	mg/kg	410,000	1,500	41,000	430	4.0		< 0.0056	< 0.0056	--	--	--
1,1,2,2-Tetrachloroethane	mg/kg	120,000	2,000	12,000	2,000	3.3		< 0.0056	< 0.0056	--	--	--
Tetrachloroethene	mg/kg	110	20	2,400	28	0.06		< 0.0056	< 0.0056	--	--	--
trans-1,2-Dichloroethene	mg/kg	41,000	3,100	41,000	3,100	0.7		< 0.0056	< 0.0056	--	--	--
Trichloroethene	mg/kg	520	8.9	1,200	12	0.06		< 0.0056	< 0.0056	--	--	--
1,1,1-Trichloroethane	mg/kg	---	1,200	---	1,200	2.0		< 0.0056	< 0.0056	--	--	--
1,1,2-Trichloroethane	mg/kg	8,200	1,800	8,200	1,800	0.02		< 0.0056	< 0.0056	--	--	--
Vinyl Chloride	mg/kg	7.9	1.1	170	1.1	0.01		< 0.0056	< 0.0056	--	--	--

Table 1 - Terracon Soil Analytical Results - VOCs
650 West 83rd Street, Chicago, IL
Project Number:A2157000

Analyte	Units	IEPA Tier 1 Soil Remediation Objectives					Sample Identification	B-3 (4-6)	B-4 (1-3)	B-4 (4-6)	B-5 (1-3)	B-5 (4-6)
		Industrial/Commercial Properties		Construction Workers		Soil Component of the Groundwater Ingestion Route	Sample Depth (feet)	4' - 6'	1' - 3'	4' - 6'	1' - 3'	4' - 6'
		Ingestion	Inhalation	Ingestion	Inhalation	Class I	Date Collected	6/27/2013	6/27/2013	6/27/2013	6/25/2013	6/25/2013
Volatile Organic Analytical Parameters												
Benzene	mg/kg	100	1.60	2,300	2.2	0.03		< 0.0085	< 0.0063	< 0.0046	< 0.0054	< 0.0057
Toluene	mg/kg	410,000	650	410,000	42	12		< 0.0085	< 0.0063	< 0.0046	< 0.0054	< 0.0057
Ethylbenzene	mg/kg	200,000	400	20,000	58	13		< 0.0085	< 0.0063	< 0.0046	< 0.0054	< 0.0057
Xylenes (total)	mg/kg	410,000	320	41,000	5.6	150		< 0.025	< 0.019	< 0.013	< 0.016	< 0.017
Methyl Tertiary-Butyl Ether	mg/kg	20,000	8,800	2,000	140	0.32		--	--	--	--	--
Acetone	mg/kg	---	100,000	---	100,000	25		--	--	--	--	--
Bromodichloromethane	mg/kg	92	3,000	2,000	3,000	0.6		--	--	--	--	--
Bromoform	mg/kg	720	100	16,000	140	0.8		--	--	--	--	--
Bromomethane	mg/kg	2,900	15	1,000	3.9	0.2		--	--	--	--	--
2-Butanone	mg/kg	1,000,000	25,000	120,000	730	17		--	--	--	--	--
Carbon Disulfide	mg/kg	200,000	720	20,000	9.0	32		--	--	--	--	--
Carbon Tetrachloride	mg/kg	44	0.64	410	0.9	0.07		--	--	--	--	--
Chlorobenzene	mg/kg	41,000	210	4,100	1.3	1.0		--	--	--	--	--
Chloroethane	mg/kg	820,000	1,500	82,000	94	15		--	--	--	--	--
Chloroform	mg/kg	940	0.54	2,000	0.76	0.6		--	--	--	--	--
Chloromethane	mg/kg	8,200	170	820	1.1	0.14		--	--	--	--	--
cis-1,2-Dichloroethene	mg/kg	20,000	1,200	20,000	1,200	0.4		--	--	--	--	--
Dibromochloromethane	mg/kg	41,000	1,300	41,000	1,300	0.4		--	--	--	--	--
1,1-Dichloroethane	mg/kg	200,000	1,700	200,000	130	23		--	--	--	--	--
1,2-Dichloroethane	mg/kg	63	0.7	1,400	0.99	0.02		--	--	--	--	--
1,1-Dichloroethene	mg/kg	100,000	470	10,000	3.0	0.06		--	--	--	--	--
1,2-Dichloropropane	mg/kg	84	23	1,800	0.5	0.03		--	--	--	--	--
1,3-Dichloropropene (cis + trans)	mg/kg	57	2.1	1,200	0.39	*0.005*		--	--	--	--	--
2-Hexanone	mg/kg	82,000	110	8,200	0.72	1.3		--	--	--	--	--
4-Methyl-2-pentanone	mg/kg	---	3,100	---	340	2.5		--	--	--	--	--
Methylene Chloride	mg/kg	760	24	12,000	34	0.02		--	--	--	--	--
Styrene	mg/kg	410,000	1,500	41,000	430	4.0		--	--	--	--	--
1,1,2,2-Tetrachloroethane	mg/kg	120,000	2,000	12,000	2,000	3.3		--	--	--	--	--
Tetrachloroethene	mg/kg	110	20	2,400	28	0.06		--	--	--	--	--
trans-1,2-Dichloroethene	mg/kg	41,000	3,100	41,000	3,100	0.7		--	--	--	--	--
Trichloroethene	mg/kg	520	8.9	1,200	12	0.06		--	--	--	--	--
1,1,1-Trichloroethane	mg/kg	---	1,200	---	1,200	2.0		--	--	--	--	--
1,1,2-Trichloroethane	mg/kg	8,200	1,800	8,200	1,800	0.02		--	--	--	--	--
Vinyl Chloride	mg/kg	7.9	1.1	170	1.1	0.01		--	--	--	--	--

Table 1 - Terracon Soil Analytical Results - VOCs
650 West 83rd Street, Chicago, IL
Project Number:A2157000

Analyte	Units	IEPA Tier 1 Soil Remediation Objectives					Sample Identification	B-6 (1-3)	B-6 (6-8)	B-7 (1-3)	B-7 (4-6)	B-8 (1-3)
		Industrial/Commercial Properties		Construction Workers		Soil Component of the Groundwater Ingestion Route	Sample Depth (feet)	1' - 3'	6' - 8'	1' - 3'	4' - 6'	1' - 3'
		Ingestion	Inhalation	Ingestion	Inhalation	Class I	Date Collected	6/25/2013	6/25/2013	6/27/2013	6/27/2013	6/26/2013
Volatile Organic Analytical Parameters												
Benzene	mg/kg	100	1.60	2,300	2.2	0.03		< 0.0044	< 0.0078	< 0.0048	< 0.0078	< 0.005
Toluene	mg/kg	410,000	650	410,000	42	12		< 0.0044	< 0.0078	< 0.0048	< 0.0078	< 0.005
Ethylbenzene	mg/kg	200,000	400	20,000	58	13		< 0.0044	< 0.0078	< 0.0048	< 0.0078	< 0.005
Xylenes (total)	mg/kg	410,000	320	41,000	5.6	150		< 0.013	< 0.023	< 0.014	< 0.024	< 0.015
Methyl Tertiary-Butyl Ether	mg/kg	20,000	8,800	2,000	140	0.32		--	--	--	--	--
Acetone	mg/kg	—	100,000	—	100,000	25		--	--	--	--	--
Bromodichloromethane	mg/kg	92	3,000	2,000	3,000	0.6		--	--	--	--	--
Bromoform	mg/kg	720	100	16,000	140	0.8		--	--	--	--	--
Bromomethane	mg/kg	2,900	15	1,000	3.9	0.2		--	--	--	--	--
2-Butanone	mg/kg	1,000,000	25,000	120,000	730	17		--	--	--	--	--
Carbon Disulfide	mg/kg	200,000	720	20,000	9.0	32		--	--	--	--	--
Carbon Tetrachloride	mg/kg	44	0.64	410	0.9	0.07		--	--	--	--	--
Chlorobenzene	mg/kg	41,000	210	4,100	1.3	1.0		--	--	--	--	--
Chloroethane	mg/kg	820,000	1,500	82,000	94	15		--	--	--	--	--
Chloroform	mg/kg	940	0.54	2,000	0.76	0.6		--	--	--	--	--
Chloromethane	mg/kg	8,200	170	820	1.1	0.14		--	--	--	--	--
cis-1,2-Dichloroethene	mg/kg	20,000	1,200	20,000	1,200	0.4		--	--	--	--	--
Dibromochloromethane	mg/kg	41,000	1,300	41,000	1,300	0.4		--	--	--	--	--
1,1-Dichloroethane	mg/kg	200,000	1,700	200,000	130	23		--	--	--	--	--
1,2-Dichloroethane	mg/kg	63	0.7	1,400	0.99	0.02		--	--	--	--	--
1,1-Dichloroethene	mg/kg	100,000	470	10,000	3.0	0.06		--	--	--	--	--
1,2-Dichloropropane	mg/kg	84	23	1,800	0.5	0.03		--	--	--	--	--
1,3-Dichloropropene (cis + trans)	mg/kg	57	2.1	1,200	0.39	*0.005*		--	--	--	--	--
2-Hexanone	mg/kg	82,000	110	8,200	0.72	1.3		--	--	--	--	--
4-Methyl-2-pentanone	mg/kg	—	3,100	—	340	2.5		--	--	--	--	--
Methylene Chloride	mg/kg	760	24	12,000	34	0.02		--	--	--	--	--
Styrene	mg/kg	410,000	1,500	41,000	430	4.0		--	--	--	--	--
1,1,2,2-Tetrachloroethane	mg/kg	120,000	2,000	12,000	2,000	3.3		--	--	--	--	--
Tetrachloroethene	mg/kg	110	20	2,400	28	0.06		--	--	--	--	--
trans-1,2-Dichloroethene	mg/kg	41,000	3,100	41,000	3,100	0.7		--	--	--	--	--
Trichloroethene	mg/kg	520	8.9	1,200	12	0.06		--	--	--	--	--
1,1,1-Trichloroethane	mg/kg	—	1,200	—	1,200	2.0		--	--	--	--	--
1,1,2-Trichloroethane	mg/kg	8,200	1,800	8,200	1,800	0.02		--	--	--	--	--
Vinyl Chloride	mg/kg	7.9	1.1	170	1.1	0.01		--	--	--	--	--

Table 1 - Terracon Soil Analytical Results - VOCs
650 West 83rd Street, Chicago, IL
Project Number:A2157000

Analyte	Units	IEPA Tier 1 Soil Remediation Objectives					Sample Identification	B-8 (4-6)	B-9 (1-3)	B-9 (4-6)	B-10 (1-3)	B-10 (4-6)
		Industrial/Commercial Properties		Construction Workers		Soil Component of the Groundwater Ingestion Route	Sample Depth (feet)	4' - 6'	1' - 3'	4' - 6'	1' - 3'	4' - 6'
		Ingestion	Inhalation	Ingestion	Inhalation	Class I	Date Collected	6/26/2013	6/26/2013	6/26/2013	6/25/2013	6/25/2013
Volatile Organic Analytical Parameters												
Benzene	mg/kg	100	1.60	2,300	2.2	0.03		< 0.0064	< 0.005	< 0.0076	< 0.0043	< 0.0068
Toluene	mg/kg	410,000	650	410,000	42	12		< 0.0064	< 0.005	< 0.0076	< 0.0043	< 0.0068
Ethylbenzene	mg/kg	200,000	400	20,000	58	13		< 0.0064	< 0.005	< 0.0076	< 0.0043	< 0.0068
Xylenes (total)	mg/kg	410,000	320	41,000	5.6	150		< 0.019	< 0.015	< 0.023	< 0.013	< 0.02
Methyl Tertiary-Butyl Ether	mg/kg	20,000	8,800	2,000	140	0.32		< 0.0064	--	--	--	--
Acetone	mg/kg	---	100,000	---	100,000	25		< 0.097	--	--	--	--
Bromodichloromethane	mg/kg	92	3,000	2,000	3,000	0.6		< 0.0064	--	--	--	--
Bromoform	mg/kg	720	100	16,000	140	0.8		< 0.0064	--	--	--	--
Bromomethane	mg/kg	2,900	15	1,000	3.9	0.2		< 0.013	--	--	--	--
2-Butanone	mg/kg	1,000,000	25,000	120,000	730	17		< 0.097	--	--	--	--
Carbon Disulfide	mg/kg	200,000	720	20,000	9.0	32		< 0.064	--	--	--	--
Carbon Tetrachloride	mg/kg	44	0.64	410	0.9	0.07		< 0.0064	--	--	--	--
Chlorobenzene	mg/kg	41,000	210	4,100	1.3	1.0		< 0.0064	--	--	--	--
Chloroethane	mg/kg	820,000	1,500	82,000	94	15		< 0.013	--	--	--	--
Chloroform	mg/kg	940	0.54	2,000	0.76	0.6		< 0.0064	--	--	--	--
Chloromethane	mg/kg	8,200	170	820	1.1	0.14		< 0.013	--	--	--	--
cis-1,2-Dichloroethene	mg/kg	20,000	1,200	20,000	1,200	0.4		< 0.0064	--	--	--	--
Dibromochloromethane	mg/kg	41,000	1,300	41,000	1,300	0.4		< 0.0064	--	--	--	--
1,1-Dichloroethane	mg/kg	200,000	1,700	200,000	130	23		< 0.0064	--	--	--	--
1,2-Dichloroethane	mg/kg	63	0.7	1,400	0.99	0.02		< 0.0064	--	--	--	--
1,1-Dichloroethene	mg/kg	100,000	470	10,000	3.0	0.06		< 0.0064	--	--	--	--
1,2-Dichloropropane	mg/kg	84	23	1,800	0.5	0.03		< 0.0064	--	--	--	--
1,3-Dichloropropene (cis + trans)	mg/kg	57	2.1	1,200	0.39	*0.005*		< 0.0026	--	--	--	--
2-Hexanone	mg/kg	82,000	110	8,200	0.72	1.3		< 0.026	--	--	--	--
4-Methyl-2-pentanone	mg/kg	---	3,100	---	340	2.5		< 0.026	--	--	--	--
Methylene Chloride	mg/kg	760	24	12,000	34	0.02		< 0.013	--	--	--	--
Styrene	mg/kg	410,000	1,500	41,000	430	4.0		< 0.0064	--	--	--	--
1,1,2,2-Tetrachloroethane	mg/kg	120,000	2,000	12,000	2,000	3.3		< 0.0064	--	--	--	--
Tetrachloroethene	mg/kg	110	20	2,400	28	0.06		< 0.0064	--	--	--	--
trans-1,2-Dichloroethene	mg/kg	41,000	3,100	41,000	3,100	0.7		< 0.0064	--	--	--	--
Trichloroethene	mg/kg	520	8.9	1,200	12	0.06		< 0.0064	--	--	--	--
1,1,1-Trichloroethane	mg/kg	---	1,200	---	1,200	2.0		< 0.0064	--	--	--	--
1,1,2-Trichloroethane	mg/kg	8,200	1,800	8,200	1,800	0.02		< 0.0064	--	--	--	--
Vinyl Chloride	mg/kg	7.9	1.1	170	1.1	0.01		< 0.0064	--	--	--	--

Table 1 - Terracon Soil Analytical Results - VOCs
650 West 83rd Street, Chicago, IL
Project Number:A2157000

Analyte	Units	IEPA Tier 1 Soil Remediation Objectives					Sample Identification	B-11 (1-3)	B-11 (4-6)	B-12 (1-3)	B-12 (4-6)	B-13 (1-3)
		Industrial/Commercial Properties		Construction Workers		Soil Component of the Groundwater Ingestion Route	Sample Depth (feet)	1' - 3'	4' - 6'	1' - 3'	4' - 6'	1' - 3'
		Ingestion	Inhalation	Ingestion	Inhalation	Class I	Date Collected	6/27/2013	6/27/2013	6/28/2013	6/28/2013	6/28/2013
Volatile Organic Analytical Parameters												
Benzene	mg/kg	100	1.60	2,300	2.2	0.03		< 0.0075	< 0.0054	< 0.0056	< 0.0049	< 0.006
Toluene	mg/kg	410,000	650	410,000	42	12		< 0.0075	< 0.0054	< 0.0056	< 0.0049	< 0.006
Ethylbenzene	mg/kg	200,000	400	20,000	58	13		< 0.0075	< 0.0054	< 0.0056	< 0.0049	< 0.006
Xylenes (total)	mg/kg	410,000	320	41,000	5.6	150		< 0.022	< 0.016	< 0.017	< 0.015	< 0.018
Methyl Tertiary-Butyl Ether	mg/kg	20,000	8,800	2,000	140	0.32		--	< 0.0054	--	--	--
Acetone	mg/kg	---	100,000	---	100,000	25		--	< 0.081	--	--	--
Bromodichloromethane	mg/kg	92	3,000	2,000	3,000	0.6		--	< 0.0054	--	--	--
Bromoform	mg/kg	720	100	16,000	140	0.8		--	< 0.0054	--	--	--
Bromomethane	mg/kg	2,900	15	1,000	3.9	0.2		--	< 0.011	--	--	--
2-Butanone	mg/kg	1,000,000	25,000	120,000	730	17		--	< 0.081	--	--	--
Carbon Disulfide	mg/kg	200,000	720	20,000	9.0	32		--	< 0.054	--	--	--
Carbon Tetrachloride	mg/kg	44	0.64	410	0.9	0.07		--	< 0.0054	--	--	--
Chlorobenzene	mg/kg	41,000	210	4,100	1.3	1.0		--	< 0.0054	--	--	--
Chloroethane	mg/kg	820,000	1,500	82,000	94	15		--	< 0.011	--	--	--
Chloroform	mg/kg	940	0.54	2,000	0.76	0.6		--	< 0.0054	--	--	--
Chloromethane	mg/kg	8,200	170	820	1.1	0.14		--	< 0.011	--	--	--
cis-1,2-Dichloroethene	mg/kg	20,000	1,200	20,000	1,200	0.4		--	< 0.0054	--	--	--
Dibromochloromethane	mg/kg	41,000	1,300	41,000	1,300	0.4		--	< 0.0054	--	--	--
1,1-Dichloroethane	mg/kg	200,000	1,700	200,000	130	23		--	< 0.0054	--	--	--
1,2-Dichloroethane	mg/kg	63	0.7	1,400	0.99	0.02		--	< 0.0054	--	--	--
1,1-Dichloroethene	mg/kg	100,000	470	10,000	3.0	0.06		--	< 0.0054	--	--	--
1,2-Dichloropropane	mg/kg	84	23	1,800	0.5	0.03		--	< 0.0054	--	--	--
1,3-Dichloropropene (cis + trans)	mg/kg	57	2.1	1,200	0.39	*0.005*		--	< 0.0022	--	--	--
2-Hexanone	mg/kg	82,000	110	8,200	0.72	1.3		--	< 0.022	--	--	--
4-Methyl-2-pentanone	mg/kg	---	3,100	---	340	2.5		--	< 0.022	--	--	--
Methylene Chloride	mg/kg	760	24	12,000	34	0.02		--	< 0.011	--	--	--
Styrene	mg/kg	410,000	1,500	41,000	430	4.0		--	< 0.0054	--	--	--
1,1,2,2-Tetrachloroethane	mg/kg	120,000	2,000	12,000	2,000	3.3		--	< 0.0054	--	--	--
Tetrachloroethene	mg/kg	110	20	2,400	28	0.06		--	< 0.0054	--	--	--
trans-1,2-Dichloroethene	mg/kg	41,000	3,100	41,000	3,100	0.7		--	< 0.0054	--	--	--
Trichloroethene	mg/kg	520	8.9	1,200	12	0.06		--	< 0.0054	--	--	--
1,1,1-Trichloroethane	mg/kg	---	1,200	---	1,200	2.0		--	< 0.0054	--	--	--
1,1,2-Trichloroethane	mg/kg	8,200	1,800	8,200	1,800	0.02		--	< 0.0054	--	--	--
Vinyl Chloride	mg/kg	7.9	1.1	170	1.1	0.01		--	< 0.0054	--	--	--

Table 1 - Terracon Soil Analytical Results - VOCs
650 West 83rd Street, Chicago, IL
Project Number:A2157000

Analyte	Units	IEPA Tier 1 Soil Remediation Objectives					Sample Identification	B-13 (4-6)	B-14 (1-3)	B-14 (6-8)	B-14VD (8-10)	B-15 (1-3)
		Industrial/Commercial Properties		Construction Workers		Soil Component of the Groundwater Ingestion Route	Sample Depth (feet)	4' - 6'	1' - 3'	6' - 8'	8' - 10'	1' - 3'
		Ingestion	Inhalation	Ingestion	Inhalation	Class I	Date Collected	6/28/2013	6/27/2013	6/27/2013	9/26/2013	6/27/2013
Volatile Organic Analytical Parameters												
Benzene	mg/kg	100	1.60	2,300	2.2	0.03		< 0.0075	0.0076	< 0.0048	< 0.0081	< 0.0052
Toluene	mg/kg	410,000	650	410,000	42	12		< 0.0075	< 0.0063	< 0.0048	< 0.0081	< 0.0052
Ethylbenzene	mg/kg	200,000	400	20,000	58	13		< 0.0075	< 0.0063	< 0.0048	< 0.0081	< 0.0052
Xylenes (total)	mg/kg	410,000	320	41,000	5.6	150		< 0.022	< 0.019	< 0.014	< 0.024	< 0.016
Methyl Tertiary-Butyl Ether	mg/kg	20,000	8,800	2,000	140	0.32		--	--	--	--	--
Acetone	mg/kg	---	100,000	---	100,000	25		--	--	--	--	--
Bromodichloromethane	mg/kg	92	3,000	2,000	3,000	0.6		--	--	--	--	--
Bromoform	mg/kg	720	100	16,000	140	0.8		--	--	--	--	--
Bromomethane	mg/kg	2,900	15	1,000	3.9	0.2		--	--	--	--	--
2-Butanone	mg/kg	1,000,000	25,000	120,000	730	17		--	--	--	--	--
Carbon Disulfide	mg/kg	200,000	720	20,000	9.0	32		--	--	--	--	--
Carbon Tetrachloride	mg/kg	44	0.64	410	0.9	0.07		--	--	--	--	--
Chlorobenzene	mg/kg	41,000	210	4,100	1.3	1.0		--	--	--	--	--
Chloroethane	mg/kg	820,000	1,500	82,000	94	15		--	--	--	--	--
Chloroform	mg/kg	940	0.54	2,000	0.76	0.6		--	--	--	--	--
Chloromethane	mg/kg	8,200	170	820	1.1	0.14		--	--	--	--	--
cis-1,2-Dichloroethene	mg/kg	20,000	1,200	20,000	1,200	0.4		--	--	--	--	--
Dibromochloromethane	mg/kg	41,000	1,300	41,000	1,300	0.4		--	--	--	--	--
1,1-Dichloroethane	mg/kg	200,000	1,700	200,000	130	23		--	--	--	--	--
1,2-Dichloroethane	mg/kg	63	0.7	1,400	0.99	0.02		--	--	--	--	--
1,1-Dichloroethene	mg/kg	100,000	470	10,000	3.0	0.06		--	--	--	--	--
1,2-Dichloropropane	mg/kg	84	23	1,800	0.5	0.03		--	--	--	--	--
1,3-Dichloropropene (cis + trans)	mg/kg	57	2.1	1,200	0.39	*0.005*		--	--	--	--	--
2-Hexanone	mg/kg	82,000	110	8,200	0.72	1.3		--	--	--	--	--
4-Methyl-2-pentanone	mg/kg	---	3,100	---	340	2.5		--	--	--	--	--
Methylene Chloride	mg/kg	760	24	12,000	34	0.02		--	--	--	--	--
Styrene	mg/kg	410,000	1,500	41,000	430	4.0		--	--	--	--	--
1,1,2,2-Tetrachloroethane	mg/kg	120,000	2,000	12,000	2,000	3.3		--	--	--	--	--
Tetrachloroethene	mg/kg	110	20	2,400	28	0.06		--	--	--	--	--
trans-1,2-Dichloroethene	mg/kg	41,000	3,100	41,000	3,100	0.7		--	--	--	--	--
Trichloroethene	mg/kg	520	8.9	1,200	12	0.06		--	--	--	--	--
1,1,1-Trichloroethane	mg/kg	---	1,200	---	1,200	2.0		--	--	--	--	--
1,1,2-Trichloroethane	mg/kg	8,200	1,800	8,200	1,800	0.02		--	--	--	--	--
Vinyl Chloride	mg/kg	7.9	1.1	170	1.1	0.01		--	--	--	--	--

Table 1 - Terracon Soil Analytical Results - VOCs
650 West 83rd Street, Chicago, IL
Project Number:A2157000

Analyte	Units	IEPA Tier 1 Soil Remediation Objectives					Sample Identification	B-15 (4-6)	B-16 (1-3)	B-16 (4-6)	B-16VD (8-10)	B-17 (1-3)
		Industrial/Commercial Properties		Construction Workers		Soil Component of the Groundwater Ingestion Route	Sample Depth (feet)	4' - 6'	1' - 3'	4' - 6'	8' - 10'	1' - 3'
		Ingestion	Inhalation	Ingestion	Inhalation	Class I	Date Collected	6/27/2013	6/27/2013	6/27/2013	9/26/2013	6/26/2013
Volatile Organic Analytical Parameters												
Benzene	mg/kg	100	1.60	2,300	2.2	0.03		< 0.0049	0.78	< 0.0055	--	< 0.0053
Toluene	mg/kg	410,000	650	410,000	42	12		< 0.0049	5.9	< 0.0055	--	< 0.0053
Ethylbenzene	mg/kg	200,000	400	20,000	58	13		< 0.0049	4	< 0.0055	--	< 0.0053
Xylenes (total)	mg/kg	410,000	320	41,000	5.6	150		< 0.015	19	< 0.017	--	< 0.016
Methyl Tertiary-Butyl Ether	mg/kg	20,000	8,800	2,000	140	0.32		< 0.0049	< 0.0052	< 0.0055	--	--
Acetone	mg/kg	---	100,000	---	100,000	25		0.18	< 0.077	< 0.083	--	--
Bromodichloromethane	mg/kg	92	3,000	2,000	3,000	0.6		< 0.0049	< 0.0052	< 0.0055	--	--
Bromoform	mg/kg	720	100	16,000	140	0.8		< 0.0049	< 0.0052	< 0.0055	--	--
Bromomethane	mg/kg	2,900	15	1,000	3.9	0.2		< 0.0099	< 0.01	< 0.011	--	--
2-Butanone	mg/kg	1,000,000	25,000	120,000	730	17		< 0.074	< 0.077	< 0.083	--	--
Carbon Disulfide	mg/kg	200,000	720	20,000	9.0	32		< 0.049	< 0.052	< 0.055	--	--
Carbon Tetrachloride	mg/kg	44	0.64	410	0.9	0.07		< 0.0049	< 0.0052	< 0.0055	--	--
Chlorobenzene	mg/kg	41,000	210	4,100	1.3	1.0		< 0.0049	< 0.0052	< 0.0055	--	--
Chloroethane	mg/kg	820,000	1,500	82,000	94	15		< 0.0099	< 0.01	< 0.011	--	--
Chloroform	mg/kg	940	0.54	2,000	0.76	0.6		< 0.0049	< 0.0052	< 0.0055	--	--
Chloromethane	mg/kg	8,200	170	820	1.1	0.14		< 0.0099	< 0.01	< 0.011	--	--
cis-1,2-Dichloroethene	mg/kg	20,000	1,200	20,000	1,200	0.4		< 0.0049	< 0.0052	< 0.0055	--	--
Dibromochloromethane	mg/kg	41,000	1,300	41,000	1,300	0.4		< 0.0049	< 0.0052	< 0.0055	--	--
1,1-Dichloroethane	mg/kg	200,000	1,700	200,000	130	23		< 0.0049	< 0.0052	< 0.0055	--	--
1,2-Dichloroethane	mg/kg	63	0.7	1,400	0.99	0.02		< 0.0049	< 0.0052	< 0.0055	--	--
1,1-Dichloroethene	mg/kg	100,000	470	10,000	3.0	0.06		< 0.0049	< 0.0052	< 0.0055	--	--
1,2-Dichloropropane	mg/kg	84	23	1,800	0.5	0.03		< 0.0049	< 0.0052	< 0.0055	--	--
1,3-Dichloropropene (cis + trans)	mg/kg	57	2.1	1,200	0.39	*0.005*		< 0.002	< 0.0021	< 0.0022	--	--
2-Hexanone	mg/kg	82,000	110	8,200	0.72	1.3		< 0.02	< 0.021	< 0.022	--	--
4-Methyl-2-pentanone	mg/kg	---	3,100	---	340	2.5		< 0.02	< 0.021	< 0.022	--	--
Methylene Chloride	mg/kg	760	24	12,000	34	0.02		< 0.0099	< 0.01	< 0.011	--	--
Styrene	mg/kg	410,000	1,500	41,000	430	4.0		< 0.0049	< 0.0052	< 0.0055	--	--
1,1,2,2-Tetrachloroethane	mg/kg	120,000	2,000	12,000	2,000	3.3		< 0.0049	< 0.0052	< 0.0055	--	--
Tetrachloroethene	mg/kg	110	20	2,400	28	0.06		< 0.0049	< 0.0052	< 0.0055	--	--
trans-1,2-Dichloroethene	mg/kg	41,000	3,100	41,000	3,100	0.7		< 0.0049	< 0.0052	< 0.0055	--	--
Trichloroethene	mg/kg	520	8.9	1,200	12	0.06		< 0.0049	< 0.0052	< 0.0055	--	--
1,1,1-Trichloroethane	mg/kg	---	1,200	---	1,200	2.0		< 0.0049	< 0.0052	< 0.0055	--	--
1,1,2-Trichloroethane	mg/kg	8,200	1,800	8,200	1,800	0.02		< 0.0049	< 0.0052	< 0.0055	--	--
Vinyl Chloride	mg/kg	7.9	1.1	170	1.1	0.01		< 0.0049	< 0.0052	< 0.0055	--	--

Table 1 - Terracon Soil Analytical Results - VOCs
650 West 83rd Street, Chicago, IL
Project Number:A2157000

Analyte	Units	IEPA Tier 1 Soil Remediation Objectives					Sample Identification	B-17 (4-6)	B-18 (1-3)	B-18 (4-6)	B-19 (1-3)	B-19 (4-6)
		Industrial/Commercial Properties		Construction Workers		Soil Component of the Groundwater Ingestion Route	Sample Depth (feet)	4' - 6'	1' - 3'	4' - 6'	1' - 3'	4' - 6'
		Ingestion	Inhalation	Ingestion	Inhalation	Class I	Date Collected	6/26/2013	6/26/2013	6/26/2013	6/26/2013	6/26/2013
Volatile Organic Analytical Parameters												
Benzene	mg/kg	100	1.60	2,300	2.2	0.03		< 0.0092	< 0.0054	< 0.0056	< 0.005	< 0.0058
Toluene	mg/kg	410,000	650	410,000	42	12		< 0.0092	< 0.0054	< 0.0056	< 0.005	< 0.0058
Ethylbenzene	mg/kg	200,000	400	20,000	58	13		< 0.0092	< 0.0054	< 0.0056	< 0.005	< 0.0058
Xylenes (total)	mg/kg	410,000	320	41,000	5.6	150		< 0.028	< 0.016	< 0.017	< 0.015	< 0.017
Methyl Tertiary-Butyl Ether	mg/kg	20,000	8,800	2,000	140	0.32		--	< 0.0054	--	--	--
Acetone	mg/kg	---	100,000	---	100,000	25		--	< 0.081	--	--	--
Bromodichloromethane	mg/kg	92	3,000	2,000	3,000	0.6		--	< 0.0054	--	--	--
Bromoform	mg/kg	720	100	16,000	140	0.8		--	< 0.0054	--	--	--
Bromomethane	mg/kg	2,900	15	1,000	3.9	0.2		--	< 0.011	--	--	--
2-Butanone	mg/kg	1,000,000	25,000	120,000	730	17		--	< 0.081	--	--	--
Carbon Disulfide	mg/kg	200,000	720	20,000	9.0	32		--	< 0.054	--	--	--
Carbon Tetrachloride	mg/kg	44	0.64	410	0.9	0.07		--	< 0.0054	--	--	--
Chlorobenzene	mg/kg	41,000	210	4,100	1.3	1.0		--	< 0.0054	--	--	--
Chloroethane	mg/kg	820,000	1,500	82,000	94	15		--	< 0.011	--	--	--
Chloroform	mg/kg	940	0.54	2,000	0.76	0.6		--	< 0.0054	--	--	--
Chloromethane	mg/kg	8,200	170	820	1.1	0.14		--	< 0.011	--	--	--
cis-1,2-Dichloroethene	mg/kg	20,000	1,200	20,000	1,200	0.4		--	< 0.0054	--	--	--
Dibromochloromethane	mg/kg	41,000	1,300	41,000	1,300	0.4		--	< 0.0054	--	--	--
1,1-Dichloroethane	mg/kg	200,000	1,700	200,000	130	23		--	< 0.0054	--	--	--
1,2-Dichloroethane	mg/kg	63	0.7	1,400	0.99	0.02		--	< 0.0054	--	--	--
1,1-Dichloroethene	mg/kg	100,000	470	10,000	3.0	0.06		--	< 0.0054	--	--	--
1,2-Dichloropropane	mg/kg	84	23	1,800	0.5	0.03		--	< 0.0054	--	--	--
1,3-Dichloropropene (cis + trans)	mg/kg	57	2.1	1,200	0.39	*0.005*		--	< 0.0022	--	--	--
2-Hexanone	mg/kg	82,000	110	8,200	0.72	1.3		--	< 0.022	--	--	--
4-Methyl-2-pentanone	mg/kg	---	3,100	---	340	2.5		--	< 0.022	--	--	--
Methylene Chloride	mg/kg	760	24	12,000	34	0.02		--	< 0.011	--	--	--
Styrene	mg/kg	410,000	1,500	41,000	430	4.0		--	< 0.0054	--	--	--
1,1,2,2-Tetrachloroethane	mg/kg	120,000	2,000	12,000	2,000	3.3		--	< 0.0054	--	--	--
Tetrachloroethene	mg/kg	110	20	2,400	28	0.06		--	< 0.0054	--	--	--
trans-1,2-Dichloroethene	mg/kg	41,000	3,100	41,000	3,100	0.7		--	< 0.0054	--	--	--
Trichloroethene	mg/kg	520	8.9	1,200	12	0.06		--	< 0.0054	--	--	--
1,1,1-Trichloroethane	mg/kg	---	1,200	---	1,200	2.0		--	< 0.0054	--	--	--
1,1,2-Trichloroethane	mg/kg	8,200	1,800	8,200	1,800	0.02		--	< 0.0054	--	--	--
Vinyl Chloride	mg/kg	7.9	1.1	170	1.1	0.01		--	< 0.0054	--	--	--

Table 1 - Terracon Soil Analytical Results - VOCs
650 West 83rd Street, Chicago, IL
Project Number:A2157000

Analyte	Units	IEPA Tier 1 Soil Remediation Objectives					Sample Identification	B-20 (1-3)	B-20 (4-6)	B-21 (1-3)	B-21 (4-6)	B-22 (1-3)
		Industrial/Commercial Properties		Construction Workers		Soil Component of the Groundwater Ingestion Route	Sample Depth (feet)	1' - 3'	4' - 6'	1' - 3'	4' - 6'	1' - 3'
		Ingestion	Inhalation	Ingestion	Inhalation	Class I	Date Collected	6/27/2013	6/27/2013	6/27/2013	6/27/2013	6/28/2013
Volatile Organic Analytical Parameters												
Benzene	mg/kg	100	1.60	2,300	2.2	0.03		< 0.0049	< 0.0078	< 0.0054	< 0.0061	--
Toluene	mg/kg	410,000	650	410,000	42	12		< 0.0049	< 0.0078	0.0055	< 0.0061	--
Ethylbenzene	mg/kg	200,000	400	20,000	58	13		< 0.0049	< 0.0078	< 0.0054	< 0.0061	--
Xylenes (total)	mg/kg	410,000	320	41,000	5.6	150		< 0.015	< 0.023	< 0.016	< 0.018	--
Methyl Tertiary-Butyl Ether	mg/kg	20,000	8,800	2,000	140	0.32		< 0.0049	--	--	--	--
Acetone	mg/kg	---	100,000	---	100,000	25		< 0.073	--	--	--	--
Bromodichloromethane	mg/kg	92	3,000	2,000	3,000	0.6		< 0.0049	--	--	--	--
Bromoform	mg/kg	720	100	16,000	140	0.8		< 0.0049	--	--	--	--
Bromomethane	mg/kg	2,900	15	1,000	3.9	0.2		< 0.0097	--	--	--	--
2-Butanone	mg/kg	1,000,000	25,000	120,000	730	17		< 0.073	--	--	--	--
Carbon Disulfide	mg/kg	200,000	720	20,000	9.0	32		< 0.049	--	--	--	--
Carbon Tetrachloride	mg/kg	44	0.64	410	0.9	0.07		< 0.0049	--	--	--	--
Chlorobenzene	mg/kg	41,000	210	4,100	1.3	1.0		< 0.0049	--	--	--	--
Chloroethane	mg/kg	820,000	1,500	82,000	94	15		< 0.0097	--	--	--	--
Chloroform	mg/kg	940	0.54	2,000	0.76	0.6		< 0.0049	--	--	--	--
Chloromethane	mg/kg	8,200	170	820	1.1	0.14		< 0.0097	--	--	--	--
cis-1,2-Dichloroethene	mg/kg	20,000	1,200	20,000	1,200	0.4		< 0.0049	--	--	--	--
Dibromochloromethane	mg/kg	41,000	1,300	41,000	1,300	0.4		< 0.0049	--	--	--	--
1,1-Dichloroethane	mg/kg	200,000	1,700	200,000	130	23		< 0.0049	--	--	--	--
1,2-Dichloroethane	mg/kg	63	0.7	1,400	0.99	0.02		< 0.0049	--	--	--	--
1,1-Dichloroethene	mg/kg	100,000	470	10,000	3.0	0.06		< 0.0049	--	--	--	--
1,2-Dichloropropane	mg/kg	84	23	1,800	0.5	0.03		< 0.0049	--	--	--	--
1,3-Dichloropropene (cis + trans)	mg/kg	57	2.1	1,200	0.39	*0.005*		< 0.002	--	--	--	--
2-Hexanone	mg/kg	82,000	110	8,200	0.72	1.3		< 0.02	--	--	--	--
4-Methyl-2-pentanone	mg/kg	---	3,100	---	340	2.5		< 0.02	--	--	--	--
Methylene Chloride	mg/kg	760	24	12,000	34	0.02		< 0.0097	--	--	--	--
Styrene	mg/kg	410,000	1,500	41,000	430	4.0		< 0.0049	--	--	--	--
1,1,2,2-Tetrachloroethane	mg/kg	120,000	2,000	12,000	2,000	3.3		< 0.0049	--	--	--	--
Tetrachloroethene	mg/kg	110	20	2,400	28	0.06		< 0.0049	--	--	--	--
trans-1,2-Dichloroethene	mg/kg	41,000	3,100	41,000	3,100	0.7		< 0.0049	--	--	--	--
Trichloroethene	mg/kg	520	8.9	1,200	12	0.06		< 0.0049	--	--	--	--
1,1,1-Trichloroethane	mg/kg	---	1,200	---	1,200	2.0		< 0.0049	--	--	--	--
1,1,2-Trichloroethane	mg/kg	8,200	1,800	8,200	1,800	0.02		< 0.0049	--	--	--	--
Vinyl Chloride	mg/kg	7.9	1.1	170	1.1	0.01		< 0.0049	--	--	--	--

Table 1 - Terracon Soil Analytical Results - VOCs
650 West 83rd Street, Chicago, IL
Project Number:A2157000

Analyte	Units	IEPA Tier 1 Soil Remediation Objectives					Sample Identification	B-22 (4-6)	B-23 (1-3)	B-23 (4-6)	B-24 (1-3)	B-24 (6-8)
		Industrial/Commercial Properties		Construction Workers		Soil Component of the Groundwater Ingestion Route	Sample Depth (feet)	4' - 6'	1' - 3'	4' - 6'	1' - 3'	6' - 8'
		Ingestion	Inhalation	Ingestion	Inhalation	Class I	Date Collected	6/28/2013	6/27/2013	6/27/2013	6/27/2013	6/27/2013
Volatile Organic Analytical Parameters												
Benzene	mg/kg	100	1.60	2,300	2.2	0.03		--	--	--	< 0.005	< 0.0079
Toluene	mg/kg	410,000	650	410,000	42	12		--	--	--	< 0.005	< 0.0079
Ethylbenzene	mg/kg	200,000	400	20,000	58	13		--	--	--	< 0.005	< 0.0079
Xylenes (total)	mg/kg	410,000	320	41,000	5.6	150		--	--	--	< 0.015	< 0.024
Methyl Tertiary-Butyl Ether	mg/kg	20,000	8,800	2,000	140	0.32		--	--	--	--	--
Acetone	mg/kg	---	100,000	---	100,000	25		--	--	--	--	--
Bromodichloromethane	mg/kg	92	3,000	2,000	3,000	0.6		--	--	--	--	--
Bromoform	mg/kg	720	100	16,000	140	0.8		--	--	--	--	--
Bromomethane	mg/kg	2,900	15	1,000	3.9	0.2		--	--	--	--	--
2-Butanone	mg/kg	1,000,000	25,000	120,000	730	17		--	--	--	--	--
Carbon Disulfide	mg/kg	200,000	720	20,000	9.0	32		--	--	--	--	--
Carbon Tetrachloride	mg/kg	44	0.64	410	0.9	0.07		--	--	--	--	--
Chlorobenzene	mg/kg	41,000	210	4,100	1.3	1.0		--	--	--	--	--
Chloroethane	mg/kg	820,000	1,500	82,000	94	15		--	--	--	--	--
Chloroform	mg/kg	940	0.54	2,000	0.76	0.6		--	--	--	--	--
Chloromethane	mg/kg	8,200	170	820	1.1	0.14		--	--	--	--	--
cis-1,2-Dichloroethene	mg/kg	20,000	1,200	20,000	1,200	0.4		--	--	--	--	--
Dibromochloromethane	mg/kg	41,000	1,300	41,000	1,300	0.4		--	--	--	--	--
1,1-Dichloroethane	mg/kg	200,000	1,700	200,000	130	23		--	--	--	--	--
1,2-Dichloroethane	mg/kg	63	0.7	1,400	0.99	0.02		--	--	--	--	--
1,1-Dichloroethene	mg/kg	100,000	470	10,000	3.0	0.06		--	--	--	--	--
1,2-Dichloropropane	mg/kg	84	23	1,800	0.5	0.03		--	--	--	--	--
1,3-Dichloropropene (cis + trans)	mg/kg	57	2.1	1,200	0.39	*0.005*		--	--	--	--	--
2-Hexanone	mg/kg	82,000	110	8,200	0.72	1.3		--	--	--	--	--
4-Methyl-2-pentanone	mg/kg	---	3,100	---	340	2.5		--	--	--	--	--
Methylene Chloride	mg/kg	760	24	12,000	34	0.02		--	--	--	--	--
Styrene	mg/kg	410,000	1,500	41,000	430	4.0		--	--	--	--	--
1,1,2,2-Tetrachloroethane	mg/kg	120,000	2,000	12,000	2,000	3.3		--	--	--	--	--
Tetrachloroethene	mg/kg	110	20	2,400	28	0.06		--	--	--	--	--
trans-1,2-Dichloroethene	mg/kg	41,000	3,100	41,000	3,100	0.7		--	--	--	--	--
Trichloroethene	mg/kg	520	8.9	1,200	12	0.06		--	--	--	--	--
1,1,1-Trichloroethane	mg/kg	---	1,200	---	1,200	2.0		--	--	--	--	--
1,1,2-Trichloroethane	mg/kg	8,200	1,800	8,200	1,800	0.02		--	--	--	--	--
Vinyl Chloride	mg/kg	7.9	1.1	170	1.1	0.01		--	--	--	--	--

Table 1 - Terracon Soil Analytical Results - VOCs
650 West 83rd Street, Chicago, IL
Project Number:A2157000

Analyte	Units	IEPA Tier 1 Soil Remediation Objectives					Sample Identification	B-25 (1-3)	B-25 (4-6)	B-26 (1-3)	B-26 (6-8)	B-27 (1-3)
		Industrial/Commercial Properties		Construction Workers		Soil Component of the Groundwater Ingestion Route	Sample Depth (feet)	1' - 3'	4' - 6'	1' - 3'	6' - 8'	1' - 3'
		Ingestion	Inhalation	Ingestion	Inhalation	Class I	Date Collected	6/26/2013	6/26/2013	6/26/2013	6/26/2013	6/26/2013
Volatile Organic Analytical Parameters												
Benzene	mg/kg	100	1.60	2,300	2.2	0.03		< 0.0055	< 0.0054	< 0.0059	< 0.0043	< 0.0057
Toluene	mg/kg	410,000	650	410,000	42	12		< 0.0055	< 0.0054	< 0.0059	< 0.0043	< 0.0057
Ethylbenzene	mg/kg	200,000	400	20,000	58	13		< 0.0055	< 0.0054	< 0.0059	< 0.0043	< 0.0057
Xylenes (total)	mg/kg	410,000	320	41,000	5.6	150		< 0.016	< 0.016	< 0.018	< 0.013	< 0.017
Methyl Tertiary-Butyl Ether	mg/kg	20,000	8,800	2,000	140	0.32		--	--	--	--	--
Acetone	mg/kg	—	100,000	—	100,000	25		--	--	--	--	--
Bromodichloromethane	mg/kg	92	3,000	2,000	3,000	0.6		--	--	--	--	--
Bromoform	mg/kg	720	100	16,000	140	0.8		--	--	--	--	--
Bromomethane	mg/kg	2,900	15	1,000	3.9	0.2		--	--	--	--	--
2-Butanone	mg/kg	1,000,000	25,000	120,000	730	17		--	--	--	--	--
Carbon Disulfide	mg/kg	200,000	720	20,000	9.0	32		--	--	--	--	--
Carbon Tetrachloride	mg/kg	44	0.64	410	0.9	0.07		--	--	--	--	--
Chlorobenzene	mg/kg	41,000	210	4,100	1.3	1.0		--	--	--	--	--
Chloroethane	mg/kg	820,000	1,500	82,000	94	15		--	--	--	--	--
Chloroform	mg/kg	940	0.54	2,000	0.76	0.6		--	--	--	--	--
Chloromethane	mg/kg	8,200	170	820	1.1	0.14		--	--	--	--	--
cis-1,2-Dichloroethene	mg/kg	20,000	1,200	20,000	1,200	0.4		--	--	--	--	--
Dibromochloromethane	mg/kg	41,000	1,300	41,000	1,300	0.4		--	--	--	--	--
1,1-Dichloroethane	mg/kg	200,000	1,700	200,000	130	23		--	--	--	--	--
1,2-Dichloroethane	mg/kg	63	0.7	1,400	0.99	0.02		--	--	--	--	--
1,1-Dichloroethene	mg/kg	100,000	470	10,000	3.0	0.06		--	--	--	--	--
1,2-Dichloropropane	mg/kg	84	23	1,800	0.5	0.03		--	--	--	--	--
1,3-Dichloropropene (cis + trans)	mg/kg	57	2.1	1,200	0.39	*0.005*		--	--	--	--	--
2-Hexanone	mg/kg	82,000	110	8,200	0.72	1.3		--	--	--	--	--
4-Methyl-2-pentanone	mg/kg	—	3,100	—	340	2.5		--	--	--	--	--
Methylene Chloride	mg/kg	760	24	12,000	34	0.02		--	--	--	--	--
Styrene	mg/kg	410,000	1,500	41,000	430	4.0		--	--	--	--	--
1,1,2,2-Tetrachloroethane	mg/kg	120,000	2,000	12,000	2,000	3.3		--	--	--	--	--
Tetrachloroethene	mg/kg	110	20	2,400	28	0.06		--	--	--	--	--
trans-1,2-Dichloroethene	mg/kg	41,000	3,100	41,000	3,100	0.7		--	--	--	--	--
Trichloroethene	mg/kg	520	8.9	1,200	12	0.06		--	--	--	--	--
1,1,1-Trichloroethane	mg/kg	—	1,200	—	1,200	2.0		--	--	--	--	--
1,1,2-Trichloroethane	mg/kg	8,200	1,800	8,200	1,800	0.02		--	--	--	--	--
Vinyl Chloride	mg/kg	7.9	1.1	170	1.1	0.01		--	--	--	--	--

Table 1 - Terracon Soil Analytical Results - VOCs
650 West 83rd Street, Chicago, IL
Project Number:A2157000

Analyte	Units	IEPA Tier 1 Soil Remediation Objectives					Sample Identification	B-27 (6-8)	B-28 (1-3)	B-28 (4-6)	B-29 (1-3)	B-29 (4-6)
		Industrial/Commercial Properties		Construction Workers		Soil Component of the Groundwater Ingestion Route	Sample Depth (feet)	6' - 8'	1' - 3'	4' - 6'	1' - 3'	4' - 6'
		Ingestion	Inhalation	Ingestion	Inhalation	Class I	Date Collected	6/26/2013	6/28/2013	6/28/2013	6/28/2013	6/28/2013
Volatile Organic Analytical Parameters												
Benzene	mg/kg	100	1.60	2,300	2.2	0.03		< 0.0054	< 0.0051	< 0.0049	0.0061	< 0.0067
Toluene	mg/kg	410,000	650	410,000	42	12		< 0.0054	< 0.0051	< 0.0049	< 0.0049	< 0.0067
Ethylbenzene	mg/kg	200,000	400	20,000	58	13		< 0.0054	< 0.0051	< 0.0049	< 0.0049	< 0.0067
Xylenes (total)	mg/kg	410,000	320	41,000	5.6	150		< 0.016	< 0.015	< 0.015	< 0.015	< 0.02
Methyl Tertiary-Butyl Ether	mg/kg	20,000	8,800	2,000	140	0.32		--	--	--	--	--
Acetone	mg/kg	---	100,000	---	100,000	25		--	--	--	--	--
Bromodichloromethane	mg/kg	92	3,000	2,000	3,000	0.6		--	--	--	--	--
Bromoform	mg/kg	720	100	16,000	140	0.8		--	--	--	--	--
Bromomethane	mg/kg	2,900	15	1,000	3.9	0.2		--	--	--	--	--
2-Butanone	mg/kg	1,000,000	25,000	120,000	730	17		--	--	--	--	--
Carbon Disulfide	mg/kg	200,000	720	20,000	9.0	32		--	--	--	--	--
Carbon Tetrachloride	mg/kg	44	0.64	410	0.9	0.07		--	--	--	--	--
Chlorobenzene	mg/kg	41,000	210	4,100	1.3	1.0		--	--	--	--	--
Chloroethane	mg/kg	820,000	1,500	82,000	94	15		--	--	--	--	--
Chloroform	mg/kg	940	0.54	2,000	0.76	0.6		--	--	--	--	--
Chloromethane	mg/kg	8,200	170	820	1.1	0.14		--	--	--	--	--
cis-1,2-Dichloroethene	mg/kg	20,000	1,200	20,000	1,200	0.4		--	--	--	--	--
Dibromochloromethane	mg/kg	41,000	1,300	41,000	1,300	0.4		--	--	--	--	--
1,1-Dichloroethane	mg/kg	200,000	1,700	200,000	130	23		--	--	--	--	--
1,2-Dichloroethane	mg/kg	63	0.7	1,400	0.99	0.02		--	--	--	--	--
1,1-Dichloroethene	mg/kg	100,000	470	10,000	3.0	0.06		--	--	--	--	--
1,2-Dichloropropane	mg/kg	84	23	1,800	0.5	0.03		--	--	--	--	--
1,3-Dichloropropene (cis + trans)	mg/kg	57	2.1	1,200	0.39	*0.005*		--	--	--	--	--
2-Hexanone	mg/kg	82,000	110	8,200	0.72	1.3		--	--	--	--	--
4-Methyl-2-pentanone	mg/kg	---	3,100	---	340	2.5		--	--	--	--	--
Methylene Chloride	mg/kg	760	24	12,000	34	0.02		--	--	--	--	--
Styrene	mg/kg	410,000	1,500	41,000	430	4.0		--	--	--	--	--
1,1,2,2-Tetrachloroethane	mg/kg	120,000	2,000	12,000	2,000	3.3		--	--	--	--	--
Tetrachloroethene	mg/kg	110	20	2,400	28	0.06		--	--	--	--	--
trans-1,2-Dichloroethene	mg/kg	41,000	3,100	41,000	3,100	0.7		--	--	--	--	--
Trichloroethene	mg/kg	520	8.9	1,200	12	0.06		--	--	--	--	--
1,1,1-Trichloroethane	mg/kg	---	1,200	---	1,200	2.0		--	--	--	--	--
1,1,2-Trichloroethane	mg/kg	8,200	1,800	8,200	1,800	0.02		--	--	--	--	--
Vinyl Chloride	mg/kg	7.9	1.1	170	1.1	0.01		--	--	--	--	--

Table 1 - Terracon Soil Analytical Results - VOCs
650 West 83rd Street, Chicago, IL
Project Number:A2157000

Analyte	Units	IEPA Tier 1 Soil Remediation Objectives					Sample Identification	B-30 (1-3)	B-30 (4-6)	B-31 (1-3)	B-31 (6-8)	B-32 (1-3)
		Industrial/Commercial Properties		Construction Workers		Soil Component of the Groundwater Ingestion Route	Sample Depth (feet)	1' - 3'	4' - 6'	1' - 3'	6' - 8'	1' - 3'
		Ingestion	Inhalation	Ingestion	Inhalation	Class I	Date Collected	6/28/2013	6/28/2013	6/27/2013	6/27/2013	6/26/2013
Volatile Organic Analytical Parameters												
Benzene	mg/kg	100	1.60	2,300	2.2	0.03		< 0.0048	< 0.0054	< 0.0045	< 0.0051	< 0.0055
Toluene	mg/kg	410,000	650	410,000	42	12		< 0.0048	< 0.0054	< 0.0045	< 0.0051	< 0.0055
Ethylbenzene	mg/kg	200,000	400	20,000	58	13		< 0.0048	< 0.0054	< 0.0045	< 0.0051	< 0.0055
Xylenes (total)	mg/kg	410,000	320	41,000	5.6	150		< 0.014	< 0.016	< 0.013	< 0.015	< 0.017
Methyl Tertiary-Butyl Ether	mg/kg	20,000	8,800	2,000	140	0.32		--	--	--	--	--
Acetone	mg/kg	—	100,000	---	100,000	25		--	--	--	--	--
Bromodichloromethane	mg/kg	92	3,000	2,000	3,000	0.6		--	--	--	--	--
Bromoform	mg/kg	720	100	16,000	140	0.8		--	--	--	--	--
Bromomethane	mg/kg	2,900	15	1,000	3.9	0.2		--	--	--	--	--
2-Butanone	mg/kg	1,000,000	25,000	120,000	730	17		--	--	--	--	--
Carbon Disulfide	mg/kg	200,000	720	20,000	9.0	32		--	--	--	--	--
Carbon Tetrachloride	mg/kg	44	0.64	410	0.9	0.07		--	--	--	--	--
Chlorobenzene	mg/kg	41,000	210	4,100	1.3	1.0		--	--	--	--	--
Chloroethane	mg/kg	820,000	1,500	82,000	94	15		--	--	--	--	--
Chloroform	mg/kg	940	0.54	2,000	0.76	0.6		--	--	--	--	--
Chloromethane	mg/kg	8,200	170	820	1.1	0.14		--	--	--	--	--
cis-1,2-Dichloroethene	mg/kg	20,000	1,200	20,000	1,200	0.4		--	--	--	--	--
Dibromochloromethane	mg/kg	41,000	1,300	41,000	1,300	0.4		--	--	--	--	--
1,1-Dichloroethane	mg/kg	200,000	1,700	200,000	130	23		--	--	--	--	--
1,2-Dichloroethane	mg/kg	63	0.7	1,400	0.99	0.02		--	--	--	--	--
1,1-Dichloroethene	mg/kg	100,000	470	10,000	3.0	0.06		--	--	--	--	--
1,2-Dichloropropane	mg/kg	84	23	1,800	0.5	0.03		--	--	--	--	--
1,3-Dichloropropene (cis + trans)	mg/kg	57	2.1	1,200	0.39	*0.005*		--	--	--	--	--
2-Hexanone	mg/kg	82,000	110	8,200	0.72	1.3		--	--	--	--	--
4-Methyl-2-pentanone	mg/kg	—	3,100	---	340	2.5		--	--	--	--	--
Methylene Chloride	mg/kg	760	24	12,000	34	0.02		--	--	--	--	--
Styrene	mg/kg	410,000	1,500	41,000	430	4.0		--	--	--	--	--
1,1,2,2-Tetrachloroethane	mg/kg	120,000	2,000	12,000	2,000	3.3		--	--	--	--	--
Tetrachloroethene	mg/kg	110	20	2,400	28	0.06		--	--	--	--	--
trans-1,2-Dichloroethene	mg/kg	41,000	3,100	41,000	3,100	0.7		--	--	--	--	--
Trichloroethene	mg/kg	520	8.9	1,200	12	0.06		--	--	--	--	--
1,1,1-Trichloroethane	mg/kg	—	1,200	---	1,200	2.0		--	--	--	--	--
1,1,2-Trichloroethane	mg/kg	8,200	1,800	8,200	1,800	0.02		--	--	--	--	--
Vinyl Chloride	mg/kg	7.9	1.1	170	1.1	0.01		--	--	--	--	--

Table 1 - Terracon Soil Analytical Results - VOCs
650 West 83rd Street, Chicago, IL
Project Number:A2157000

Analyte	Units	IEPA Tier 1 Soil Remediation Objectives					Sample Identification	B-32 (6-8)	B-33 (1-3)	B-33 (4-6)	B-34 (1-3)	B-34 (4-6)
		Industrial/Commercial Properties		Construction Workers		Soil Component of the Groundwater Ingestion Route	Sample Depth (feet)	6' - 8'	1' - 3'	4' - 6'	1' - 3'	4' - 6'
		Ingestion	Inhalation	Ingestion	Inhalation	Class I	Date Collected	6/26/2013	6/26/2013	6/26/2013	6/25/2013	6/25/2013
Volatile Organic Analytical Parameters												
Benzene	mg/kg	100	1.60	2,300	2.2	0.03		< 0.0089	< 0.0055	< 0.0048	< 0.0041	< 0.0067
Toluene	mg/kg	410,000	650	410,000	42	12		< 0.0089	< 0.0055	< 0.0048	< 0.0041	< 0.0067
Ethylbenzene	mg/kg	200,000	400	20,000	58	13		< 0.0089	< 0.0055	< 0.0048	< 0.0041	< 0.0067
Xylenes (total)	mg/kg	410,000	320	41,000	5.6	150		< 0.027	< 0.017	< 0.014	< 0.012	< 0.02
Methyl Tertiary-Butyl Ether	mg/kg	20,000	8,800	2,000	140	0.32		--	--	< 0.0048	< 0.0041	--
Acetone	mg/kg	---	100,000	---	100,000	25		--	--	< 0.072	< 0.062	--
Bromodichloromethane	mg/kg	92	3,000	2,000	3,000	0.6		--	--	< 0.0048	< 0.0041	--
Bromoform	mg/kg	720	100	16,000	140	0.8		--	--	< 0.0048	< 0.0041	--
Bromomethane	mg/kg	2,900	15	1,000	3.9	0.2		--	--	< 0.0096	< 0.0083	--
2-Butanone	mg/kg	1,000,000	25,000	120,000	730	17		--	--	< 0.072	< 0.062	--
Carbon Disulfide	mg/kg	200,000	720	20,000	9.0	32		--	--	< 0.048	< 0.041	--
Carbon Tetrachloride	mg/kg	44	0.64	410	0.9	0.07		--	--	< 0.0048	< 0.0041	--
Chlorobenzene	mg/kg	41,000	210	4,100	1.3	1.0		--	--	< 0.0048	< 0.0041	--
Chloroethane	mg/kg	820,000	1,500	82,000	94	15		--	--	< 0.0096	< 0.0083	--
Chloroform	mg/kg	940	0.54	2,000	0.76	0.6		--	--	< 0.0048	< 0.0041	--
Chloromethane	mg/kg	8,200	170	820	1.1	0.14		--	--	< 0.0096	< 0.0083	--
cis-1,2-Dichloroethene	mg/kg	20,000	1,200	20,000	1,200	0.4		--	--	< 0.0048	< 0.0041	--
Dibromochloromethane	mg/kg	41,000	1,300	41,000	1,300	0.4		--	--	< 0.0048	< 0.0041	--
1,1-Dichloroethane	mg/kg	200,000	1,700	200,000	130	23		--	--	< 0.0048	< 0.0041	--
1,2-Dichloroethane	mg/kg	63	0.7	1,400	0.99	0.02		--	--	< 0.0048	< 0.0041	--
1,1-Dichloroethene	mg/kg	100,000	470	10,000	3.0	0.06		--	--	< 0.0048	< 0.0041	--
1,2-Dichloropropane	mg/kg	84	23	1,800	0.5	0.03		--	--	< 0.0048	< 0.0041	--
1,3-Dichloropropene (cis + trans)	mg/kg	57	2.1	1,200	0.39	*0.005*		--	--	< 0.0019	< 0.0017	--
2-Hexanone	mg/kg	82,000	110	8,200	0.72	1.3		--	--	< 0.019	< 0.017	--
4-Methyl-2-pentanone	mg/kg	---	3,100	---	340	2.5		--	--	< 0.019	< 0.017	--
Methylene Chloride	mg/kg	760	24	12,000	34	0.02		--	--	< 0.0096	< 0.0083	--
Styrene	mg/kg	410,000	1,500	41,000	430	4.0		--	--	< 0.0048	< 0.0041	--
1,1,2,2-Tetrachloroethane	mg/kg	120,000	2,000	12,000	2,000	3.3		--	--	< 0.0048	< 0.0041	--
Tetrachloroethene	mg/kg	110	20	2,400	28	0.06		--	--	< 0.0048	< 0.0041	--
trans-1,2-Dichloroethene	mg/kg	41,000	3,100	41,000	3,100	0.7		--	--	< 0.0048	< 0.0041	--
Trichloroethene	mg/kg	520	8.9	1,200	12	0.06		--	--	< 0.0048	< 0.0041	--
1,1,1-Trichloroethane	mg/kg	---	1,200	---	1,200	2.0		--	--	< 0.0048	< 0.0041	--
1,1,2-Trichloroethane	mg/kg	8,200	1,800	8,200	1,800	0.02		--	--	< 0.0048	< 0.0041	--
Vinyl Chloride	mg/kg	7.9	1.1	170	1.1	0.01		--	--	< 0.0048	< 0.0041	--

Table 1 - Terracon Soil Analytical Results - VOCs
650 West 83rd Street, Chicago, IL
Project Number:A2157000

Analyte	Units	IEPA Tier 1 Soil Remediation Objectives					Sample Identification	B-35 (1-3)	B-35 (4-6)	B-36 (1-3)	B-36 (4-6)	B-37 (1-3)
		Industrial/Commercial Properties		Construction Workers		Soil Component of the Groundwater Ingestion Route	Sample Depth (feet)	1' - 3'	4' - 6'	1' - 3'	4' - 6'	1' - 3'
		Ingestion	Inhalation	Ingestion	Inhalation	Class I	Date Collected	6/26/2013	6/26/2013	6/26/2013	6/26/2013	6/27/2013
Volatile Organic Analytical Parameters												
Benzene	mg/kg	100	1.60	2,300	2.2	0.03		< 0.0052	< 0.008	< 0.0045	< 0.0067	< 0.0085
Toluene	mg/kg	410,000	650	410,000	42	12		< 0.0052	< 0.008	< 0.0045	< 0.0067	< 0.0085
Ethylbenzene	mg/kg	200,000	400	20,000	58	13		< 0.0052	< 0.008	< 0.0045	< 0.0067	< 0.0085
Xylenes (total)	mg/kg	410,000	320	41,000	5.6	150		< 0.016	< 0.024	< 0.014	< 0.02	< 0.026
Methyl Tertiary-Butyl Ether	mg/kg	20,000	8,800	2,000	140	0.32		--	--	--	--	--
Acetone	mg/kg	---	100,000	---	100,000	25		--	--	--	--	--
Bromodichloromethane	mg/kg	92	3,000	2,000	3,000	0.6		--	--	--	--	--
Bromoform	mg/kg	720	100	16,000	140	0.8		--	--	--	--	--
Bromomethane	mg/kg	2,900	15	1,000	3.9	0.2		--	--	--	--	--
2-Butanone	mg/kg	1,000,000	25,000	120,000	730	17		--	--	--	--	--
Carbon Disulfide	mg/kg	200,000	720	20,000	9.0	32		--	--	--	--	--
Carbon Tetrachloride	mg/kg	44	0.64	410	0.9	0.07		--	--	--	--	--
Chlorobenzene	mg/kg	41,000	210	4,100	1.3	1.0		--	--	--	--	--
Chloroethane	mg/kg	820,000	1,500	82,000	94	15		--	--	--	--	--
Chloroform	mg/kg	940	0.54	2,000	0.76	0.6		--	--	--	--	--
Chloromethane	mg/kg	8,200	170	820	1.1	0.14		--	--	--	--	--
cis-1,2-Dichloroethene	mg/kg	20,000	1,200	20,000	1,200	0.4		--	--	--	--	--
Dibromochloromethane	mg/kg	41,000	1,300	41,000	1,300	0.4		--	--	--	--	--
1,1-Dichloroethane	mg/kg	200,000	1,700	200,000	130	23		--	--	--	--	--
1,2-Dichloroethane	mg/kg	63	0.7	1,400	0.99	0.02		--	--	--	--	--
1,1-Dichloroethene	mg/kg	100,000	470	10,000	3.0	0.06		--	--	--	--	--
1,2-Dichloropropane	mg/kg	84	23	1,800	0.5	0.03		--	--	--	--	--
1,3-Dichloropropene (cis + trans)	mg/kg	57	2.1	1,200	0.39	*0.005*		--	--	--	--	--
2-Hexanone	mg/kg	82,000	110	8,200	0.72	1.3		--	--	--	--	--
4-Methyl-2-pentanone	mg/kg	---	3,100	---	340	2.5		--	--	--	--	--
Methylene Chloride	mg/kg	760	24	12,000	34	0.02		--	--	--	--	--
Styrene	mg/kg	410,000	1,500	41,000	430	4.0		--	--	--	--	--
1,1,2,2-Tetrachloroethane	mg/kg	120,000	2,000	12,000	2,000	3.3		--	--	--	--	--
Tetrachloroethene	mg/kg	110	20	2,400	28	0.06		--	--	--	--	--
trans-1,2-Dichloroethene	mg/kg	41,000	3,100	41,000	3,100	0.7		--	--	--	--	--
Trichloroethene	mg/kg	520	8.9	1,200	12	0.06		--	--	--	--	--
1,1,1-Trichloroethane	mg/kg	---	1,200	---	1,200	2.0		--	--	--	--	--
1,1,2-Trichloroethane	mg/kg	8,200	1,800	8,200	1,800	0.02		--	--	--	--	--
Vinyl Chloride	mg/kg	7.9	1.1	170	1.1	0.01		--	--	--	--	--

Table 1 - Terracon Soil Analytical Results - VOCs
650 West 83rd Street, Chicago, IL
Project Number:A2157000

Analyte	Units	IEPA Tier 1 Soil Remediation Objectives					Sample Identification	B-37 (6-8)	B-101 (6-8)	B-103 (6-8)	B-104 (6-8)	B-105 (6-8)
		Industrial/Commercial Properties		Construction Workers		Soil Component of the Groundwater Ingestion Route	Sample Depth (feet)	6' - 8'	6' - 8'	6' - 8'	6' - 8'	6' - 8'
		Ingestion	Inhalation	Ingestion	Inhalation	Class I	Date Collected	6/27/2013	9/27/2013	9/27/2013	9/27/2013	9/27/2013
Volatile Organic Analytical Parameters												
Benzene	mg/kg	100	1.60	2,300	2.2	0.03		< 0.006	< 0.0057	< 0.0073	--	< 0.0057
Toluene	mg/kg	410,000	650	410,000	42	12		< 0.006	< 0.0057	< 0.0073	--	< 0.0057
Ethylbenzene	mg/kg	200,000	400	20,000	58	13		< 0.006	< 0.0057	< 0.0073	--	< 0.0057
Xylenes (total)	mg/kg	410,000	320	41,000	5.6	150		< 0.018	< 0.017	< 0.022	--	< 0.017
Methyl Tertiary-Butyl Ether	mg/kg	20,000	8,800	2,000	140	0.32		--	--	--	--	--
Acetone	mg/kg	---	100,000	---	100,000	25		--	--	--	--	--
Bromodichloromethane	mg/kg	92	3,000	2,000	3,000	0.6		--	--	--	--	--
Bromoform	mg/kg	720	100	16,000	140	0.8		--	--	--	--	--
Bromomethane	mg/kg	2,900	15	1,000	3.9	0.2		--	--	--	--	--
2-Butanone	mg/kg	1,000,000	25,000	120,000	730	17		--	--	--	--	--
Carbon Disulfide	mg/kg	200,000	720	20,000	9.0	32		--	--	--	--	--
Carbon Tetrachloride	mg/kg	44	0.64	410	0.9	0.07		--	--	--	--	--
Chlorobenzene	mg/kg	41,000	210	4,100	1.3	1.0		--	--	--	--	--
Chloroethane	mg/kg	820,000	1,500	82,000	94	15		--	--	--	--	--
Chloroform	mg/kg	940	0.54	2,000	0.76	0.6		--	--	--	--	--
Chloromethane	mg/kg	8,200	170	820	1.1	0.14		--	--	--	--	--
cis-1,2-Dichloroethene	mg/kg	20,000	1,200	20,000	1,200	0.4		--	--	--	--	--
Dibromochloromethane	mg/kg	41,000	1,300	41,000	1,300	0.4		--	--	--	--	--
1,1-Dichloroethane	mg/kg	200,000	1,700	200,000	130	23		--	--	--	--	--
1,2-Dichloroethane	mg/kg	63	0.7	1,400	0.99	0.02		--	--	--	--	--
1,1-Dichloroethene	mg/kg	100,000	470	10,000	3.0	0.06		--	--	--	--	--
1,2-Dichloropropane	mg/kg	84	23	1,800	0.5	0.03		--	--	--	--	--
1,3-Dichloropropene (cis + trans)	mg/kg	57	2.1	1,200	0.39	*0.005*		--	--	--	--	--
2-Hexanone	mg/kg	82,000	110	8,200	0.72	1.3		--	--	--	--	--
4-Methyl-2-pentanone	mg/kg	---	3,100	---	340	2.5		--	--	--	--	--
Methylene Chloride	mg/kg	760	24	12,000	34	0.02		--	--	--	--	--
Styrene	mg/kg	410,000	1,500	41,000	430	4.0		--	--	--	--	--
1,1,2,2-Tetrachloroethane	mg/kg	120,000	2,000	12,000	2,000	3.3		--	--	--	--	--
Tetrachloroethene	mg/kg	110	20	2,400	28	0.06		--	--	--	--	--
trans-1,2-Dichloroethene	mg/kg	41,000	3,100	41,000	3,100	0.7		--	--	--	--	--
Trichloroethene	mg/kg	520	8.9	1,200	12	0.06		--	--	--	--	--
1,1,1-Trichloroethane	mg/kg	---	1,200	---	1,200	2.0		--	--	--	--	--
1,1,2-Trichloroethane	mg/kg	8,200	1,800	8,200	1,800	0.02		--	--	--	--	--
Vinyl Chloride	mg/kg	7.9	1.1	170	1.1	0.01		--	--	--	--	--

Table 1 - Terracon Soil Analytical Results - VOCs
650 West 83rd Street, Chicago, IL
Project Number:A2157000

Analyte	Units	IEPA Tier 1 Soil Remediation Objectives					Sample Identification	B-106 (6-8)	B-107 (6-8)
		Industrial/Commercial Properties		Construction Workers		Soil Component of the Groundwater Ingestion Route	Sample Depth (feet)	6' - 8'	6' - 8'
		Ingestion	Inhalation	Ingestion	Inhalation	Class I	Date Collected	9/27/2013	9/27/2013
Volatile Organic Analytical Parameters									
Benzene	mg/kg	100	1.60	2,300	2.2	0.03		--	< 0.0065
Toluene	mg/kg	410,000	650	410,000	42	12		--	< 0.0065
Ethylbenzene	mg/kg	200,000	400	20,000	58	13		--	< 0.0065
Xylenes (total)	mg/kg	410,000	320	41,000	5.6	150		--	< 0.019
Methyl Tertiary-Butyl Ether	mg/kg	20,000	8,800	2,000	140	0.32		--	--
Acetone	mg/kg	---	100,000	---	100,000	25		--	--
Bromodichloromethane	mg/kg	92	3,000	2,000	3,000	0.6		--	--
Bromoform	mg/kg	720	100	16,000	140	0.8		--	--
Bromomethane	mg/kg	2,900	15	1,000	3.9	0.2		--	--
2-Butanone	mg/kg	1,000,000	25,000	120,000	730	17		--	--
Carbon Disulfide	mg/kg	200,000	720	20,000	9.0	32		--	--
Carbon Tetrachloride	mg/kg	44	0.64	410	0.9	0.07		--	--
Chlorobenzene	mg/kg	41,000	210	4,100	1.3	1.0		--	--
Chloroethane	mg/kg	820,000	1,500	82,000	94	15		--	--
Chloroform	mg/kg	940	0.54	2,000	0.76	0.6		--	--
Chloromethane	mg/kg	8,200	170	820	1.1	0.14		--	--
cis-1,2-Dichloroethene	mg/kg	20,000	1,200	20,000	1,200	0.4		--	--
Dibromochloromethane	mg/kg	41,000	1,300	41,000	1,300	0.4		--	--
1,1-Dichloroethane	mg/kg	200,000	1,700	200,000	130	23		--	--
1,2-Dichloroethane	mg/kg	63	0.7	1,400	0.99	0.02		--	--
1,1-Dichloroethene	mg/kg	100,000	470	10,000	3.0	0.06		--	--
1,2-Dichloropropane	mg/kg	84	23	1,800	0.5	0.03		--	--
1,3-Dichloropropene (cis + trans)	mg/kg	57	2.1	1,200	0.39	*0.005*		--	--
2-Hexanone	mg/kg	82,000	110	8,200	0.72	1.3		--	--
4-Methyl-2-pentanone	mg/kg	—	3,100	—	340	2.5		--	--
Methylene Chloride	mg/kg	760	24	12,000	34	0.02		--	--
Styrene	mg/kg	410,000	1,500	41,000	430	4.0		--	--
1,1,2,2-Tetrachloroethane	mg/kg	120,000	2,000	12,000	2,000	3.3		--	--
Tetrachloroethene	mg/kg	110	20	2,400	28	0.06		--	--
trans-1,2-Dichloroethene	mg/kg	41,000	3,100	41,000	3,100	0.7		--	--
Trichloroethene	mg/kg	520	8.9	1,200	12	0.06		--	--
1,1,1-Trichloroethane	mg/kg	—	1,200	—	1,200	2.0		--	--
1,1,2-Trichloroethane	mg/kg	8,200	1,800	8,200	1,800	0.02		--	--
Vinyl Chloride	mg/kg	7.9	1.1	170	1.1	0.01		--	--

Table 2 - Terracon Soil Analytical Results - SVOCs
650 West 83rd Street, Chicago, IL
Project Number:A2157000

Analyte	Units	IEPA Tier 1 Soil Remediation Objectives					Background	Sample Identification	B-1 (1-3)	B-1 (4-6)	B-2 (1-3)	B-2 (6-8)	B-3 (1-3)
		Industrial/Commercial Properties		Construction Workers		Soil Component of the Groundwater Ingestion Route		Sample Depth (feet)	1' - 3'	4' - 6'	1' - 3'	6' - 8'	1' - 3'
		Ingestion	Inhalation	Ingestion	Inhalation	Class I	Chicago	Date Collected	6/27/2013	6/27/2013	6/27/2013	6/27/2013	6/27/2013
Semivolatile Organic Analytical Parameters													
Acenaphthene	mg/kg	120,000	---	120,000	---	570	0.09		0.57	< 0.038	< 0.037	< 0.04	< 0.41
Acenaphthylene	mg/kg	61,000	—	61,000	---	85	0.03		0.36	< 0.038	0.043	< 0.04	< 0.41
Anthracene	mg/kg	610,000	---	610,000	---	12,000	0.25		2.3	0.04	0.15	< 0.04	0.59
Benzo(a)anthracene	mg/kg	8.0	---	170	---	2.0	1.1		4.6	0.18	0.57	< 0.04	2.2
Benzo(a)pyrene	mg/kg	0.8	—	17	---	8.0	1.3		4.6	0.17	0.6	< 0.04	2.3
Benzo(b)fluoranthene	mg/kg	8.0	—	170	---	5.0	1.5		4.2	0.23	0.59	< 0.04	2.3
Benzo(g,h,i)perylene	mg/kg	61,000	---	61,000	---	27,000	0.68		2.5	0.11	0.35	< 0.04	1.4
Benzo(k)fluoranthene	mg/kg	78	—	1,700	---	49	0.99		3.7	0.14	0.42	< 0.04	2.1
Chrysene	mg/kg	780	—	17,000	---	160	1.2		4.4	0.19	0.58	< 0.04	2.6
Dibenzo(a,h)anthracene	mg/kg	0.8	---	17	---	2.0	0.2		1.4	0.073	0.17	< 0.04	0.8
Fluoranthene	mg/kg	82,000	—	82,000	—	4,300	2.7		10	0.3	1.1	< 0.04	4.2
Fluorene	mg/kg	82,000	—	82,000	---	560	0.1		1.1	< 0.038	< 0.037	< 0.04	< 0.41
Indeno(1,2,3-c,d)pyrene	mg/kg	8	—	170	—	14	0.86		2.3	0.093	0.3	< 0.04	1.2
Naphthalene	mg/kg	41,000	270	4,100	1.8	12	0.04		< 0.35	< 0.038	< 0.037	< 0.04	< 0.41
Phenanthrene	mg/kg	61,000	—	61,000	—	200	1.3		7.5	0.11	0.55	< 0.04	1.9
Pyrene	mg/kg	61,000	---	61,000	---	4,200	1.9		7.9	0.28	1	< 0.04	3.8
bis(2-Chloroethoxy) methane	mg/kg	—	—	—	---	---	---		< 1.8	< 0.2	--	--	--
bis(2-Chloroethyl) ether	mg/kg	5.0	*0.66*	75	*0.66*	*0.66*	---		< 1.8	< 0.2	--	--	--
bis(2-Ethylhexyl)phthalate	mg/kg	410	31,000	4,100	31,000	3,600	---		< 8.9	< 0.96	--	--	--
4-Bromophenyl-phenyl ether	mg/kg	---	—	—	—	—	—		< 1.8	< 0.2	--	--	--
Butylbenzylphthalate	mg/kg	410,000	930	410,000	930	930	---		< 1.8	< 0.2	--	--	--
Carbazole	mg/kg	290	—	6,200	—	0.6	---		< 1.8	< 0.2	--	--	--
4-Chloroaniline	mg/kg	8,200	---	820	---	0.7	—		< 1.8	< 0.2	--	--	--
2-Chloronaphthalene	mg/kg	160,000	—	160,000	—	49	---		< 1.8	< 0.2	--	--	--
4-Chloro-3-methylphenol	mg/kg	14,000	---	41,000	---	24	---		< 3.5	< 0.38	--	--	--
2-Chlorophenol	mg/kg	10,000	53,000	10,000	53,000	4.0	---		< 1.8	< 0.2	--	--	--
4-Chlorophenyl-phenyl ether	mg/kg	---	---	---	---	—	---		< 1.8	< 0.2	--	--	--
Dibenzofuran	mg/kg	4,100	—	4,100	—	6.1	---		< 1.8	< 0.2	--	--	--
1,2-Dichlorobenzene	mg/kg	180,000	560	18,000	310	17	---		< 1.8	< 0.2	--	--	--
1,3-Dichlorobenzene	mg/kg	1,800	570	180	570	0.2	—		< 1.8	< 0.2	--	--	--
1,4-Dichlorobenzene	mg/kg	—	17,000	—	340	2.0	---		< 1.8	< 0.2	--	--	--

Table 2 - Terracon Soil Analytical Results - SVOCs
650 West 83rd Street, Chicago, IL
Project Number:A2157000

Analyte	Units	IEPA Tier 1 Soil Remediation Objectives					Background	Sample Identification	B-3 (4-6)	B-4 (1-3)	B-4 (4-6)	B-5 (1-3)	B-5 (4-6)
		Industrial/Commercial Properties		Construction Workers		Soil Component of the Groundwater Ingestion Route		Sample Depth (feet)	4' - 6'	1' - 3'	4' - 6'	1' - 3'	4' - 6'
		Ingestion	Inhalation	Ingestion	Inhalation	Class I	Chicago	Date Collected	6/27/2013	6/27/2013	6/27/2013	6/25/2013	6/25/2013
Semivolatile Organic Analytical Parameters													
Acenaphthene	mg/kg	120,000	—	120,000	—	570	0.09		0.073	< 0.044	< 0.04	0.43	< 0.037
Acenaphthylene	mg/kg	61,000	—	61,000	—	85	0.03		0.26	< 0.044	< 0.04	0.095	< 0.037
Anthracene	mg/kg	610,000	—	610,000	—	12,000	0.25		0.84	< 0.044	< 0.04	1.6	0.044
Benzo(a)anthracene	mg/kg	8.0	—	170	—	2.0	1.1		3.3	< 0.044	0.1	3.7	0.13
Benzo(a)pyrene	mg/kg	0.8	—	17	—	8.0	1.3		4.3	< 0.044	0.1	3.6	0.17
Benzo(b)fluoranthene	mg/kg	8.0	—	170	—	5.0	1.5		2.3	< 0.044	0.087	3.5	0.16
Benzo(g,h,i)perylene	mg/kg	61,000	—	61,000	—	27,000	0.68		2.4	< 0.044	0.058	2	0.12
Benzo(k)fluoranthene	mg/kg	78	—	1,700	—	49	0.99		2.9	< 0.044	0.1	2.7	0.12
Chrysene	mg/kg	780	—	17,000	—	160	1.2		3.8	< 0.044	0.12	3.9	0.18
Dibenzo(a,h)anthracene	mg/kg	0.8	—	17	—	2.0	0.2		0.78	< 0.044	< 0.04	1.1	< 0.037
Fluoranthene	mg/kg	82,000	—	82,000	—	4,300	2.7		6.1	< 0.044	0.22	9.6	0.22
Fluorene	mg/kg	82,000	—	82,000	—	560	0.1		0.15	< 0.044	< 0.04	0.53	< 0.037
Indeno(1,2,3-c,d)pyrene	mg/kg	8	—	170	—	14	0.86		1.7	< 0.044	0.057	1.8	0.086
Naphthalene	mg/kg	41,000	270	4,100	1.8	12	0.04		0.087	< 0.044	< 0.04	0.38	< 0.037
Phenanthrene	mg/kg	61,000	—	61,000	—	200	1.3		0.52	< 0.044	0.17	6.9	0.11
Pyrene	mg/kg	61,000	—	61,000	—	4,200	1.9		9.1	< 0.044	0.2	7.9	0.24
bis(2-Chloroethoxy) methane	mg/kg	—	—	—	—	—	—		–	–	–	–	–
bis(2-Chloroethyl) ether	mg/kg	5.0	*0.66*	75	*0.66*	*0.66*	—		–	–	–	–	–
bis(2-Ethylhexyl)phthalate	mg/kg	410	31,000	4,100	31,000	3,600	—		–	–	–	–	–
4-Bromophenyl-phenyl ether	mg/kg	—	—	—	—	—	—		–	–	–	–	–
Butylbenzylphthalate	mg/kg	410,000	930	410,000	930	930	—		–	–	–	–	–
Carbazole	mg/kg	290	—	6,200	—	0.6	—		–	–	–	–	–
4-Chloroaniline	mg/kg	8,200	—	820	—	0.7	—		–	–	–	–	–
2-Chloronaphthalene	mg/kg	160,000	—	160,000	—	49	—		–	–	–	–	–
4-Chloro-3-methylphenol	mg/kg	14,000	—	41,000	—	24	—		–	–	–	–	–
2-Chlorophenol	mg/kg	10,000	53,000	10,000	53,000	4.0	—		–	–	–	–	–
4-Chlorophenyl-phenyl ether	mg/kg	—	—	—	—	—	—		–	–	–	–	–
Dibenzofuran	mg/kg	4,100	—	4,100	—	6.1	—		–	–	–	–	–
1,2-Dichlorobenzene	mg/kg	180,000	560	18,000	310	17	—		–	–	–	–	–
1,3-Dichlorobenzene	mg/kg	1,800	570	180	570	0.2	—		–	–	–	–	–
1,4-Dichlorobenzene	mg/kg	—	17,000	—	340	2.0	—		–	–	–	–	–

Table 2 - Terracon Soil Analytical Results - SVOCs
650 West 83rd Street, Chicago, IL
Project Number:A2157000

Analyte	Units	IEPA Tier 1 Soil Remediation Objectives					Background	Sample Identification	B-6 (1-3)	B-6 (6-8)	B-7 (1-3)	B-7 (4-6)	B-8 (1-3)
		Industrial/Commercial Properties		Construction Workers		Soil Component of the Groundwater Ingestion Route		Sample Depth (feet)	1' - 3'	6' - 8'	1' - 3'	4' - 6'	1' - 3'
		Ingestion	Inhalation	Ingestion	Inhalation	Class I	Chicago	Date Collected	6/25/2013	6/25/2013	6/27/2013	6/27/2013	6/26/2013
Semivolatile Organic Analytical Parameters													
Acenaphthene	mg/kg	120,000	—	120,000	—	570	0.09		2	0.087	0.33	< 0.06	8.8
Acenaphthylene	mg/kg	61,000	---	61,000	—	85	0.03		0.059	0.078	0.19	< 0.06	4.9
Anthracene	mg/kg	610,000	—	610,000	—	12,000	0.25		7.2	0.32	1.4	< 0.06	42
Benzo(a)anthracene	mg/kg	8.0	---	170	—	2.0	1.1		7.4	0.95	4.4	0.073	77
Benzo(a)pyrene	mg/kg	0.8	---	17	---	8.0	1.3		6.4	0.87	4.3	0.071	73
Benzo(b)fluoranthene	mg/kg	8.0	---	170	—	5.0	1.5		4.4	1	4.6	< 0.06	53
Benzo(g,h,i)perylene	mg/kg	61,000	—	61,000	—	27,000	0.68		2.5	0.53	2.4	< 0.06	30
Benzo(k)fluoranthene	mg/kg	78	---	1,700	—	49	0.99		4.1	0.64	2.9	0.081	61
Chrysene	mg/kg	780	—	17,000	---	160	1.2		6.6	1.1	4.5	0.071	70
Dibenzo(a,h)anthracene	mg/kg	0.8	—	17	—	2.0	0.2		1.3	0.27	1.2	< 0.06	16
Fluoranthene	mg/kg	82,000	---	82,000	---	4,300	2.7		21	2.4	9.8	0.14	180
Fluorene	mg/kg	82,000	—	82,000	—	560	0.1		3.4	0.14	0.42	< 0.06	18
Indeno(1,2,3-c,d)pyrene	mg/kg	8	---	170	—	14	0.86		2.4	0.47	2.2	< 0.06	28
Naphthalene	mg/kg	41,000	270	4,100	1.8	12	0.04		0.75	0.078	0.09	< 0.06	5.7
Phenanthrene	mg/kg	61,000	---	61,000	—	200	1.3		22	1.9	5.4	0.091	160
Pyrene	mg/kg	61,000	—	61,000	---	4,200	1.9		16	1.9	7.8	0.14	140
bis(2-Chloroethoxy) methane	mg/kg	---	—	—	—	—	---		--	--	--	--	--
bis(2-Chloroethyl) ether	mg/kg	5.0	*0.66*	75	*0.66*	*0.66*	---		--	--	--	--	--
bis(2-Ethylhexyl)phthalate	mg/kg	410	31,000	4,100	31,000	3,600	—		--	--	--	--	--
4-Bromophenyl-phenyl ether	mg/kg	—	—	—	—	---	---		--	--	--	--	--
Butylbenzylphthalate	mg/kg	410,000	930	410,000	930	930	—		--	--	--	--	--
Carbazole	mg/kg	290	—	6,200	---	0.6	---		--	--	--	--	--
4-Chloroaniline	mg/kg	8,200	---	820	—	0.7	---		--	--	--	--	--
2-Chloronaphthalene	mg/kg	160,000	—	160,000	---	49	---		--	--	--	--	--
4-Chloro-3-methylphenol	mg/kg	14,000	---	41,000	—	24	---		--	--	--	--	--
2-Chlorophenol	mg/kg	10,000	53,000	10,000	53,000	4.0	---		--	--	--	--	--
4-Chlorophenyl-phenyl ether	mg/kg	---	---	---	—	—	---		--	--	--	--	--
Dibenzofuran	mg/kg	4,100	—	4,100	---	6.1	—		--	--	--	--	--
1,2-Dichlorobenzene	mg/kg	180,000	560	18,000	310	17	---		--	--	--	--	--
1,3-Dichlorobenzene	mg/kg	1,800	570	180	570	0.2	---		--	--	--	--	--
1,4-Dichlorobenzene	mg/kg	---	17,000	---	340	2.0	---		--	--	--	--	--

Table 2 - Terracon Soil Analytical Results - SVOCs
650 West 83rd Street, Chicago, IL
Project Number:A2157000

Analyte	Units	IEPA Tier 1 Soil Remediation Objectives					Background	Sample Identification	B-8 (4-6)	B-9 (1-3)	B-9 (4-6)	B-10 (1-3)	B-10 (4-6)
		Industrial/Commercial Properties		Construction Workers		Soil Component of the Groundwater Ingestion Route		Sample Depth (feet)	4' - 6'	1' - 3'	4' - 6'	1' - 3'	4' - 6'
		Ingestion	Inhalation	Ingestion	Inhalation	Class I	Chicago	Date Collected	6/26/2013	6/26/2013	6/26/2013	6/25/2013	6/25/2013
Semivolatile Organic Analytical Parameters													
Acenaphthene	mg/kg	120,000	—	120,000	—	570	0.09		1.9	< 0.36	1.3	0.13	0.077
Acenaphthylene	mg/kg	61,000	—	61,000	—	85	0.03		0.42	< 0.36	0.76	0.067	< 0.043
Anthracene	mg/kg	610,000	—	610,000	—	12,000	0.25		9.7	< 0.36	3.3	0.4	0.17
Benzo(a)anthracene	mg/kg	8.0	—	170	—	2.0	1.1		19	0.44	6.2	0.83	0.49
Benzo(a)pyrene	mg/kg	0.8	—	17	—	8.0	1.3		18	1.2	5.7	0.76	0.52
Benzo(b)fluoranthene	mg/kg	8.0	—	170	—	5.0	1.5		14	0.81	5.3	0.77	0.55
Benzo(g,h,i)perylene	mg/kg	61,000	—	61,000	—	27,000	0.68		8	1.1	2.6	0.52	0.32
Benzo(k)fluoranthene	mg/kg	78	—	1,700	—	49	0.99		17	0.52	4.6	0.74	0.39
Chrysene	mg/kg	780	—	17,000	—	160	1.2		18	0.6	6.2	0.86	0.59
Dibenzo(a,h)anthracene	mg/kg	0.8	—	17	—	2.0	0.2		4.2	0.51	1.5	0.25	0.17
Fluoranthene	mg/kg	82,000	—	82,000	—	4,300	2.7		40	0.86	15	2.2	0.96
Fluorene	mg/kg	82,000	—	82,000	—	560	0.1		3.7	< 0.36	2.7	0.32	0.065
Indeno(1,2,3-c,d)pyrene	mg/kg	8	—	170	—	14	0.86		7.7	0.73	2.4	0.48	0.28
Naphthalene	mg/kg	41,000	270	4,100	1.8	12	0.04		1	< 0.36	3.1	0.3	0.15
Phenanthrene	mg/kg	61,000	—	61,000	—	200	1.3		32	0.43	14	1.9	0.66
Pyrene	mg/kg	61,000	—	61,000	—	4,200	1.9		32	0.98	12	1.7	0.93
bis(2-Chloroethoxy) methane	mg/kg	—	—	—	—	—	—		< 0.22	--	--	--	--
bis(2-Chloroethyl) ether	mg/kg	5.0	*0.66*	75	*0.66*	*0.66*	—		< 0.22	--	--	--	--
bis(2-Ethylhexyl)phthalate	mg/kg	410	31,000	4,100	31,000	3,600	—		< 1.1	--	--	--	--
4-Bromophenyl-phenyl ether	mg/kg	—	—	—	—	—	—		< 0.22	--	--	--	--
Butylbenzylphthalate	mg/kg	410,000	930	410,000	930	930	—		< 0.22	--	--	--	--
Carbazole	mg/kg	290	—	6,200	—	0.6	—		2	--	--	--	--
4-Chloroaniline	mg/kg	8,200	—	820	—	0.7	—		< 0.22	--	--	--	--
2-Chloronaphthalene	mg/kg	160,000	—	160,000	—	49	—		< 0.22	--	--	--	--
4-Chloro-3-methylphenol	mg/kg	14,000	—	41,000	—	24	—		< 0.44	--	--	--	--
2-Chlorophenol	mg/kg	10,000	53,000	10,000	53,000	4.0	—		< 0.22	--	--	--	--
4-Chlorophenyl-phenyl ether	mg/kg	—	—	—	—	—	—		< 0.22	--	--	--	--
Dibenzofuran	mg/kg	4,100	—	4,100	—	6.1	—		2.2	--	--	--	--
1,2-Dichlorobenzene	mg/kg	180,000	560	18,000	310	17	—		< 0.22	--	--	--	--
1,3-Dichlorobenzene	mg/kg	1,800	570	180	570	0.2	—		< 0.22	--	--	--	--
1,4-Dichlorobenzene	mg/kg	—	17,000	—	340	2.0	—		< 0.22	--	--	--	--

Table 2 - Terracon Soil Analytical Results - SVOCs
650 West 83rd Street, Chicago, IL
Project Number:A2157000

Analyte	Units	IEPA Tier 1 Soil Remediation Objectives					Background	Sample Identification	B-11 (1-3)	B-11 (4-6)	B-12 (1-3)	B-12 (4-6)	B-13 (1-3)
		Industrial/Commercial Properties		Construction Workers		Soil Component of the Groundwater Ingestion Route		Sample Depth (feet)	1' - 3'	4' - 6'	1' - 3'	4' - 6'	1' - 3'
		Ingestion	Inhalation	Ingestion	Inhalation	Class I	Chicago	Date Collected	6/27/2013	6/27/2013	6/28/2013	6/28/2013	6/28/2013
Semivolatile Organic Analytical Parameters													
Acenaphthene	mg/kg	120,000	---	120,000	---	570	0.09		< 0.042	< 0.04	< 0.04	< 0.039	< 0.04
Acenaphthylene	mg/kg	61,000	---	61,000	---	85	0.03		< 0.042	< 0.04	0.047	0.051	0.047
Anthracene	mg/kg	610,000	---	610,000	---	12,000	0.25		< 0.042	< 0.04	0.055	0.1	0.13
Benzo(a)anthracene	mg/kg	8.0	---	170	---	2.0	1.1		0.068	0.19	0.25	0.28	0.58
Benzo(a)pyrene	mg/kg	0.8	---	17	---	8.0	1.3		0.064	0.14	0.35	0.31	0.6
Benzo(b)fluoranthene	mg/kg	8.0	---	170	---	5.0	1.5		0.062	0.13	0.4	0.25	0.64
Benzo(g,h,i)perylene	mg/kg	61,000	---	61,000	---	27,000	0.68		0.071	0.1	0.3	0.15	0.35
Benzo(k)fluoranthene	mg/kg	78	---	1,700	---	49	0.99		0.086	0.14	0.27	0.19	0.46
Chrysene	mg/kg	780	---	17,000	---	160	1.2		0.083	0.2	0.35	0.29	0.63
Dibenzo(a,h)anthracene	mg/kg	0.8	---	17	---	2.0	0.2		< 0.042	0.053	0.15	0.078	0.2
Fluoranthene	mg/kg	82,000	---	82,000	---	4,300	2.7		0.099	0.26	0.28	0.53	1
Fluorene	mg/kg	82,000	---	82,000	---	560	0.1		< 0.042	< 0.04	< 0.04	< 0.039	< 0.04
Indeno(1,2,3-c,d)pyrene	mg/kg	8	---	170	---	14	0.86		0.061	0.071	0.24	0.12	0.3
Naphthalene	mg/kg	41,000	270	4,100	1.8	12	0.04		< 0.042	< 0.04	0.1	< 0.039	< 0.04
Phenanthrene	mg/kg	61,000	---	61,000	---	200	1.3		0.1	0.36	0.17	0.34	0.54
Pyrene	mg/kg	61,000	---	61,000	---	4,200	1.9		0.12	0.34	0.26	0.52	0.91
bis(2-Chloroethoxy) methane	mg/kg	---	---	---	---	---	---		--	< 0.21	--	--	--
bis(2-Chloroethyl) ether	mg/kg	5.0	*0.66*	75	*0.66*	*0.66*	---		--	< 0.21	--	--	--
bis(2-Ethylhexyl)phthalate	mg/kg	410	31,000	4,100	31,000	3,600	---		--	< 1	--	--	--
4-Bromophenyl-phenyl ether	mg/kg	---	---	---	---	---	---		--	< 0.21	--	--	--
Butylbenzylphthalate	mg/kg	410,000	930	410,000	930	930	---		--	< 0.21	--	--	--
Carbazole	mg/kg	290	---	6,200	---	0.6	---		--	< 0.21	--	--	--
4-Chloroaniline	mg/kg	8,200	---	820	---	0.7	---		--	< 0.21	--	--	--
2-Chloronaphthalene	mg/kg	160,000	---	160,000	---	49	---		--	< 0.21	--	--	--
4-Chloro-3-methylphenol	mg/kg	14,000	---	41,000	---	24	---		--	< 0.4	--	--	--
2-Chlorophenol	mg/kg	10,000	53,000	10,000	53,000	4.0	---		--	< 0.21	--	--	--
4-Chlorophenyl-phenyl ether	mg/kg	---	---	---	---	---	---		--	< 0.21	--	--	--
Dibenzofuran	mg/kg	4,100	---	4,100	---	6.1	---		--	< 0.21	--	--	--
1,2-Dichlorobenzene	mg/kg	180,000	560	18,000	310	17	---		--	< 0.21	--	--	--
1,3-Dichlorobenzene	mg/kg	1,800	570	180	570	0.2	---		--	< 0.21	--	--	--
1,4-Dichlorobenzene	mg/kg	---	17,000	---	340	2.0	---		--	< 0.21	--	--	--

Table 2 - Terracon Soil Analytical Results - SVOCs
650 West 83rd Street, Chicago, IL
Project Number:A2157000

Analyte	Units	IEPA Tier 1 Soil Remediation Objectives					Background	Sample Identification	B-13 (4-6)	B-14 (1-3)	B-14 (6-8)	B-14VD (8-10)	B-15 (1-3)
		Industrial/Commercial Properties		Construction Workers		Soil Component of the Groundwater Ingestion Route		Sample Depth (feet)	4' - 6'	1' - 3'	6' - 8'	8' - 10'	1' - 3'
		Ingestion	Inhalation	Ingestion	Inhalation	Class I	Chicago	Date Collected	6/28/2013	6/27/2013	6/27/2013	9/26/2013	6/27/2013
Semivolatile Organic Analytical Parameters													
Acenaphthene	mg/kg	120,000	---	120,000	---	570	0.09		< 0.042	< 0.036	67	0.22	0.72
Acenaphthylene	mg/kg	61,000	---	61,000	---	85	0.03		< 0.042	< 0.036	39	0.088	0.41
Anthracene	mg/kg	610,000	---	610,000	---	12,000	0.25		0.05	0.1	160	0.55	1.7
Benzo(a)anthracene	mg/kg	8.0	---	170	---	2.0	1.1		0.11	0.42	200	0.83	7.1
Benzo(a)pyrene	mg/kg	0.8	---	17	---	8.0	1.3		0.13	0.46	190	0.79	8.4
Benzo(b)fluoranthene	mg/kg	8.0	---	170	---	5.0	1.5		0.13	0.44	160	0.63	8.7
Benzo(g,h,i)perylene	mg/kg	61,000	---	61,000	---	27,000	0.68		0.097	0.26	85	0.5	5.3
Benzo(k)fluoranthene	mg/kg	78	---	1,700	---	49	0.99		0.085	0.33	140	0.62	6.1
Chrysene	mg/kg	780	---	17,000	---	160	1.2		0.14	0.45	200	0.85	8.5
Dibenzo(a,h)anthracene	mg/kg	0.8	---	17	---	2.0	0.2		< 0.042	0.14	44	0.26	2.4
Fluoranthene	mg/kg	82,000	---	82,000	---	4,300	2.7		0.17	0.83	480	1.8	19
Fluorene	mg/kg	82,000	---	82,000	---	560	0.1		< 0.042	< 0.036	140	0.35	0.71
Indeno(1,2,3-c,d)pyrene	mg/kg	8	---	170	---	14	0.86		0.087	0.24	79	0.45	4.4
Naphthalene	mg/kg	41,000	270	4,100	1.8	12	0.04		< 0.042	< 0.036	170	0.51	< 0.37
Phenanthrene	mg/kg	61,000	---	61,000	---	200	1.3		0.13	0.36	600	2.1	9.1
Pyrene	mg/kg	61,000	---	61,000	---	4,200	1.9		0.2	0.84	420	1.6	15
bis(2-Chloroethoxy) methane	mg/kg	---	---	---	---	---	---		--	--	--	--	--
bis(2-Chloroethyl) ether	mg/kg	5.0	*0.66*	75	*0.66*	*0.66*	---		--	--	--	--	--
bis(2-Ethylhexyl)phthalate	mg/kg	410	31,000	4,100	31,000	3,600	---		--	--	--	--	--
4-Bromophenyl-phenyl ether	mg/kg	---	---	---	---	---	---		--	--	--	--	--
Butylbenzylphthalate	mg/kg	410,000	930	410,000	930	930	---		--	--	--	--	--
Carbazole	mg/kg	290	---	6,200	---	0.6	---		--	--	--	--	--
4-Chloroaniline	mg/kg	8,200	---	820	---	0.7	---		--	--	--	--	--
2-Chloronaphthalene	mg/kg	160,000	---	160,000	---	49	---		--	--	--	--	--
4-Chloro-3-methylphenol	mg/kg	14,000	---	41,000	---	24	---		--	--	--	--	--
2-Chlorophenol	mg/kg	10,000	53,000	10,000	53,000	4.0	---		--	--	--	--	--
4-Chlorophenyl-phenyl ether	mg/kg	---	---	---	---	---	---		--	--	--	--	--
Dibenzofuran	mg/kg	4,100	---	4,100	---	6.1	---		--	--	--	--	--
1,2-Dichlorobenzene	mg/kg	180,000	560	18,000	310	17	---		--	--	--	--	--
1,3-Dichlorobenzene	mg/kg	1,800	570	180	570	0.2	---		--	--	--	--	--
1,4-Dichlorobenzene	mg/kg	---	17,000	---	340	2.0	---		--	--	--	--	--

Table 2 - Terracon Soil Analytical Results - SVOCs
650 West 83rd Street, Chicago, IL
Project Number:A2157000

Analyte	Units	IEPA Tier 1 Soil Remediation Objectives					Background	Sample Identification	B-15 (4-6)	B-16 (1-3)	B-16 (4-6)	B-17 (1-3)	B-17 (4-6)
		Industrial/Commercial Properties		Construction Workers		Soil Component of the Groundwater Ingestion Route		Sample Depth (feet)	4' - 6'	1' - 3'	4' - 6'	1' - 3'	4' - 6'
		Ingestion	Inhalation	Ingestion	Inhalation	Class I	Chicago	Date Collected	6/27/2013	6/27/2013	6/27/2013	6/26/2013	6/26/2013
Semivolatile Organic Analytical Parameters													
Acenaphthene	mg/kg	120,000	---	120,000	---	570	0.09		0.35	< 0.038	< 0.044	< 0.41	< 0.053
Acenaphthylene	mg/kg	61,000	---	61,000	---	85	0.03		< 0.037	< 0.038	< 0.044	< 0.41	< 0.053
Anthracene	mg/kg	610,000	---	610,000	---	12,000	0.25		0.088	0.072	< 0.044	< 0.41	< 0.053
Benzo(a)anthracene	mg/kg	8.0	---	170	---	2.0	1.1		0.22	0.13	< 0.044	0.89	0.058
Benzo(a)pyrene	mg/kg	0.8	---	17	---	8.0	1.3		0.21	0.11	< 0.044	0.92	0.062
Benzo(b)fluoranthene	mg/kg	8.0	---	170	---	5.0	1.5		0.23	0.09	< 0.044	0.68	0.067
Benzo(g,h,i)perylene	mg/kg	61,000	---	61,000	---	27,000	0.68		0.11	0.062	< 0.044	0.45	< 0.053
Benzo(k)fluoranthene	mg/kg	78	---	1,700	---	49	0.99		0.16	0.096	< 0.044	0.47	< 0.053
Chrysene	mg/kg	780	---	17,000	---	160	1.2		0.25	0.12	< 0.044	0.86	0.081
Dibenzo(a,h)anthracene	mg/kg	0.8	---	17	---	2.0	0.2		0.069	< 0.038	< 0.044	< 0.41	< 0.053
Fluoranthene	mg/kg	82,000	---	82,000	---	4,300	2.7		0.62	0.24	0.047	1.8	0.11
Fluorene	mg/kg	82,000	---	82,000	---	560	0.1		0.061	< 0.038	< 0.044	< 0.41	< 0.053
Indeno(1,2,3-c,d)pyrene	mg/kg	8	---	170	---	14	0.86		0.095	0.044	< 0.044	0.42	< 0.053
Naphthalene	mg/kg	41,000	270	4,100	1.8	12	0.04		< 0.037	< 0.038	< 0.044	< 0.41	< 0.053
Phenanthrene	mg/kg	61,000	---	61,000	---	200	1.3		0.32	0.2	< 0.044	0.82	0.084
Pyrene	mg/kg	61,000	---	61,000	---	4,200	1.9		0.47	0.22	< 0.044	1.4	0.11
bis(2-Chloroethoxy) methane	mg/kg	---	---	---	---	---	---		--	< 0.2	< 0.23	--	--
bis(2-Chloroethyl) ether	mg/kg	5.0	*0.66*	75	*0.66*	*0.66*	---		--	< 0.2	< 0.23	--	--
bis(2-Ethylhexyl)phthalate	mg/kg	410	31,000	4,100	31,000	3,600	---		--	< 0.96	< 1.1	--	--
4-Bromophenyl-phenyl ether	mg/kg	---	---	---	---	---	---		--	< 0.2	< 0.23	--	--
Butylbenzylphthalate	mg/kg	410,000	930	410,000	930	930	---		--	< 0.2	< 0.23	--	--
Carbazole	mg/kg	290	---	6,200	---	0.6	---		--	< 0.2	< 0.23	--	--
4-Chloroaniline	mg/kg	8,200	---	820	---	0.7	---		--	< 0.2	< 0.23	--	--
2-Chloronaphthalene	mg/kg	160,000	---	160,000	---	49	---		--	< 0.2	< 0.23	--	--
4-Chloro-3-methylphenol	mg/kg	14,000	---	41,000	---	24	---		--	< 0.38	< 0.44	--	--
2-Chlorophenol	mg/kg	10,000	53,000	10,000	53,000	4.0	---		--	< 0.2	< 0.23	--	--
4-Chlorophenyl-phenyl ether	mg/kg	---	---	---	---	---	---		--	< 0.2	< 0.23	--	--
Dibenzofuran	mg/kg	4,100	---	4,100	---	6.1	---		--	< 0.2	< 0.23	--	--
1,2-Dichlorobenzene	mg/kg	180,000	560	18,000	310	17	---		--	< 0.2	< 0.23	--	--
1,3-Dichlorobenzene	mg/kg	1,800	570	180	570	0.2	---		--	< 0.2	< 0.23	--	--
1,4-Dichlorobenzene	mg/kg	---	17,000	---	340	2.0	---		--	< 0.2	< 0.23	--	--

Table 2 - Terracon Soil Analytical Results - SVOCs
650 West 83rd Street, Chicago, IL
Project Number:A2157000

Analyte	Units	IEPA Tier 1 Soil Remediation Objectives					Background	Sample Identification	B-18 (1-3)	B-18 (4-6)	B-19 (1-3)	B-19 (4-6)	B-20 (1-3)
		Industrial/Commercial Properties		Construction Workers		Soil Component of the Groundwater Ingestion Route		Sample Depth (feet)	1' - 3'	4' - 6'	1' - 3'	4' - 6'	1' - 3'
		Ingestion	Inhalation	Ingestion	Inhalation	Class I	Chicago	Date Collected	6/26/2013	6/26/2013	6/26/2013	6/26/2013	6/27/2013
Semivolatile Organic Analytical Parameters													
Acenaphthene	mg/kg	120,000	—	120,000	—	570	0.09		< 0.37	< 0.043	0.22	< 0.047	< 0.041
Acenaphthylene	mg/kg	61,000	—	61,000	—	85	0.03		0.86	< 0.043	0.16	< 0.047	< 0.041
Anthracene	mg/kg	610,000	—	610,000	—	12,000	0.25		2.4	< 0.043	0.63	< 0.047	0.41
Benzo(a)anthracene	mg/kg	8.0	—	170	—	2.0	1.1		8.2	< 0.043	1.8	0.049	2.5
Benzo(a)pyrene	mg/kg	0.8	—	17	—	8.0	1.3		8.7	< 0.043	1.9	0.054	1.8
Benzo(b)fluoranthene	mg/kg	8.0	—	170	—	5.0	1.5		8.9	< 0.043	1.7	< 0.047	2.2
Benzo(g,h,i)perylene	mg/kg	61,000	—	61,000	—	27,000	0.68		4.4	< 0.043	0.9	< 0.047	1
Benzo(k)fluoranthene	mg/kg	78	—	1,700	—	49	0.99		6.2	< 0.043	1.5	< 0.047	1.4
Chrysene	mg/kg	780	—	17,000	—	160	1.2		7.7	< 0.043	1.9	0.064	2.8
Dibenzo(a,h)anthracene	mg/kg	0.8	—	17	—	2.0	0.2		2.2	< 0.043	0.5	< 0.047	0.59
Fluoranthene	mg/kg	82,000	—	82,000	—	4,300	2.7		18	0.044	3.7	0.11	3.8
Fluorene	mg/kg	82,000	—	82,000	—	560	0.1		0.55	< 0.043	0.15	< 0.047	< 0.041
Indeno(1,2,3-c,d)pyrene	mg/kg	8	—	170	—	14	0.86		4.2	< 0.043	0.83	< 0.047	0.93
Naphthalene	mg/kg	41,000	270	4,100	1.8	12	0.04		< 0.37	< 0.043	0.09	< 0.047	< 0.041
Phenanthrene	mg/kg	61,000	—	61,000	—	200	1.3		6.5	0.049	1.6	0.094	1.5
Pyrene	mg/kg	61,000	—	61,000	—	4,200	1.9		16	0.054	3.3	0.11	3.7
bis(2-Chloroethoxy) methane	mg/kg	—	—	—	—	—	—		--	--	--	--	< 0.21
bis(2-Chloroethyl) ether	mg/kg	5.0	*0.66*	75	*0.66*	*0.66*	—		--	--	--	--	< 0.21
bis(2-Ethylhexyl)phthalate	mg/kg	410	31,000	4,100	31,000	3,600	—		--	--	--	--	< 1
4-Bromophenyl-phenyl ether	mg/kg	—	—	—	—	—	—		--	--	--	--	< 0.21
Butylbenzylphthalate	mg/kg	410,000	930	410,000	930	930	—		--	--	--	--	< 0.21
Carbazole	mg/kg	290	—	6,200	—	0.6	—		--	--	--	--	< 0.21
4-Chloroaniline	mg/kg	8,200	—	820	—	0.7	—		--	--	--	--	< 0.21
2-Chloronaphthalene	mg/kg	160,000	—	160,000	—	49	—		--	--	--	--	< 0.21
4-Chloro-3-methylphenol	mg/kg	14,000	—	41,000	—	24	—		--	--	--	--	< 0.41
2-Chlorophenol	mg/kg	10,000	53,000	10,000	53,000	4.0	—		--	--	--	--	< 0.21
4-Chlorophenyl-phenyl ether	mg/kg	—	—	—	—	—	—		--	--	--	--	< 0.21
Dibenzofuran	mg/kg	4,100	—	4,100	—	6.1	—		--	--	--	--	< 0.21
1,2-Dichlorobenzene	mg/kg	180,000	560	18,000	310	17	—		--	--	--	--	< 0.21
1,3-Dichlorobenzene	mg/kg	1,800	570	180	570	0.2	—		--	--	--	--	< 0.21
1,4-Dichlorobenzene	mg/kg	—	17,000	—	340	2.0	—		--	--	--	--	< 0.21

Table 2 - Terracon Soil Analytical Results - SVOCs
650 West 83rd Street, Chicago, IL
Project Number:A2157000

Analyte	Units	IEPA Tier 1 Soil Remediation Objectives					Background	Sample Identification	B-20 (4-6)	B-21 (1-3)	B-21 (4-6)	B-24 (1-3)	B-24 (6-8)
		Industrial/Commercial Properties		Construction Workers		Soil Component of the Groundwater Ingestion Route		Sample Depth (feet)	4' - 6'	1' - 3'	4' - 6'	1' - 3'	6' - 8'
		Ingestion	Inhalation	Ingestion	Inhalation	Class I	Chicago	Date Collected	6/27/2013	6/27/2013	6/27/2013	6/27/2013	6/27/2013
Semivolatile Organic Analytical Parameters													
Acenaphthene	mg/kg	120,000	---	120,000	---	570	0.09		< 0.048	< 0.043	< 0.041	< 0.36	< 0.052
Acenaphthylene	mg/kg	61,000	---	61,000	---	85	0.03		< 0.048	< 0.043	< 0.041	< 0.36	< 0.052
Anthracene	mg/kg	610,000	---	610,000	---	12,000	0.25		< 0.048	< 0.043	< 0.041	< 0.36	< 0.052
Benzo(a)anthracene	mg/kg	8.0	---	170	---	2.0	1.1		0.13	< 0.043	< 0.041	0.37	< 0.052
Benzo(a)pyrene	mg/kg	0.8	---	17	---	8.0	1.3		0.14	< 0.043	< 0.041	0.44	< 0.052
Benzo(b)fluoranthene	mg/kg	8.0	---	170	---	5.0	1.5		0.075	< 0.043	< 0.041	0.41	< 0.052
Benzo(g,h,i)perylene	mg/kg	61,000	---	61,000	---	27,000	0.68		0.09	< 0.043	< 0.041	< 0.36	< 0.052
Benzo(k)fluoranthene	mg/kg	78	---	1,700	---	49	0.99		0.12	< 0.043	< 0.041	< 0.36	< 0.052
Chrysene	mg/kg	780	---	17,000	---	160	1.2		0.17	< 0.043	< 0.041	0.44	< 0.052
Dibenzo(a,h)anthracene	mg/kg	0.8	---	17	---	2.0	0.2		< 0.048	< 0.043	< 0.041	< 0.36	< 0.052
Fluoranthene	mg/kg	82,000	---	82,000	---	4,300	2.7		0.18	0.05	< 0.041	0.71	0.068
Fluorene	mg/kg	82,000	---	82,000	---	560	0.1		< 0.048	< 0.043	< 0.041	< 0.36	< 0.052
Indeno(1,2,3-c,d)pyrene	mg/kg	8	---	170	---	14	0.86		0.053	< 0.043	< 0.041	< 0.36	< 0.052
Naphthalene	mg/kg	41,000	270	4,100	1.8	12	0.04		< 0.048	< 0.043	< 0.041	< 0.36	< 0.052
Phenanthrene	mg/kg	61,000	---	61,000	---	200	1.3		0.11	0.12	< 0.041	< 0.36	0.07
Pyrene	mg/kg	61,000	---	61,000	---	4,200	1.9		0.29	0.044	< 0.041	0.68	0.079
bis(2-Chloroethoxy) methane	mg/kg	---	---	---	---	---	---		--	--	--	--	--
bis(2-Chloroethyl) ether	mg/kg	5.0	*0.66*	75	*0.66*	*0.66*	---		--	--	--	--	--
bis(2-Ethylhexyl)phthalate	mg/kg	410	31,000	4,100	31,000	3,600	---		--	--	--	--	--
4-Bromophenyl-phenyl ether	mg/kg	---	---	---	---	---	---		--	--	--	--	--
Butylbenzylphthalate	mg/kg	410,000	930	410,000	930	930	---		--	--	--	--	--
Carbazole	mg/kg	290	---	6,200	---	0.6	---		--	--	--	--	--
4-Chloroaniline	mg/kg	8,200	---	820	---	0.7	---		--	--	--	--	--
2-Chloronaphthalene	mg/kg	160,000	---	160,000	---	49	---		--	--	--	--	--
4-Chloro-3-methylphenol	mg/kg	14,000	---	41,000	---	24	---		--	--	--	--	--
2-Chlorophenol	mg/kg	10,000	53,000	10,000	53,000	4.0	---		--	--	--	--	--
4-Chlorophenyl-phenyl ether	mg/kg	---	---	---	---	---	---		--	--	--	--	--
Dibenzofuran	mg/kg	4,100	---	4,100	---	6.1	---		--	--	--	--	--
1,2-Dichlorobenzene	mg/kg	180,000	560	18,000	310	17	---		--	--	--	--	--
1,3-Dichlorobenzene	mg/kg	1,800	570	180	570	0.2	---		--	--	--	--	--
1,4-Dichlorobenzene	mg/kg	---	17,000	---	340	2.0	---		--	--	--	--	--

Table 2 - Terracon Soil Analytical Results - SVOCs
650 West 83rd Street, Chicago, IL
Project Number:A2157000

Analyte	Units	IEPA Tier 1 Soil Remediation Objectives					Background	Sample Identification	B-25 (1-3)	B-25 (4-6)	B-26 (1-3)	B-26 (6-8)	B-27 (1-3)
		Industrial/Commercial Properties		Construction Workers		Soil Component of the Groundwater Ingestion Route		Sample Depth (feet)	1' - 3'	4' - 6'	1' - 3'	6' - 8'	1' - 3'
		Ingestion	Inhalation	Ingestion	Inhalation	Class I	Chicago	Date Collected	6/26/2013	6/26/2013	6/26/2013	6/26/2013	6/26/2013
Semivolatile Organic Analytical Parameters													
Acenaphthene	mg/kg	120,000	---	120,000	---	570	0.09		0.17	0.46	6.2	< 0.04	0.94
Acenaphthylene	mg/kg	61,000	---	61,000	---	85	0.03		0.21	0.2	< 0.39	< 0.04	0.52
Anthracene	mg/kg	610,000	---	610,000	---	12,000	0.25		0.99	1.4	20	< 0.04	3.7
Benzo(a)anthracene	mg/kg	8.0	---	170	---	2.0	1.1		2.7	2.3	29	< 0.04	8.7
Benzo(a)pyrene	mg/kg	0.8	---	17	---	8.0	1.3		2.7	2	22	< 0.04	8.1
Benzo(b)fluoranthene	mg/kg	8.0	---	170	---	5.0	1.5		2.3	2.1	22	< 0.04	8
Benzo(g,h,i)perylene	mg/kg	61,000	---	61,000	---	27,000	0.68		1.4	0.94	10	< 0.04	4.1
Benzo(k)fluoranthene	mg/kg	78	---	1,700	---	49	0.99		2.1	1.4	19	< 0.04	6.4
Chrysene	mg/kg	780	---	17,000	---	160	1.2		2.6	2.3	31	< 0.04	8.8
Dibenzo(a,h)anthracene	mg/kg	0.8	---	17	---	2.0	0.2		0.65	0.54	6.4	< 0.04	2.3
Fluoranthene	mg/kg	82,000	---	82,000	---	4,300	2.7		6.1	5.3	70	< 0.04	20
Fluorene	mg/kg	82,000	---	82,000	---	560	0.1		0.29	1.4	11	< 0.04	1.4
Indeno(1,2,3-c,d)pyrene	mg/kg	8	---	170	---	14	0.86		1.2	0.86	9.5	< 0.04	3.9
Naphthalene	mg/kg	41,000	270	4,100	1.8	12	0.04		0.06	1.2	5.5	< 0.04	0.12
Phenanthrene	mg/kg	61,000	---	61,000	---	200	1.3		3.1	5.7	76	< 0.04	11
Pyrene	mg/kg	61,000	---	61,000	---	4,200	1.9		4.9	4.3	53	< 0.04	16
bis(2-Chloroethoxy) methane	mg/kg	---	---	---	---	---	---		--	--	--	--	--
bis(2-Chloroethyl) ether	mg/kg	5.0	*0.66*	75	*0.66*	*0.66*	---		--	--	--	--	--
bis(2-Ethylhexyl)phthalate	mg/kg	410	31,000	4,100	31,000	3,600	---		--	--	--	--	--
4-Bromophenyl-phenyl ether	mg/kg	---	---	---	---	---	---		--	--	--	--	--
Butylbenzylphthalate	mg/kg	410,000	930	410,000	930	930	---		--	--	--	--	--
Carbazole	mg/kg	290	---	6,200	---	0.6	---		--	--	--	--	--
4-Chloroaniline	mg/kg	8,200	---	820	---	0.7	---		--	--	--	--	--
2-Chloronaphthalene	mg/kg	160,000	---	160,000	---	49	---		--	--	--	--	--
4-Chloro-3-methylphenol	mg/kg	14,000	---	41,000	---	24	---		--	--	--	--	--
2-Chlorophenol	mg/kg	10,000	53,000	10,000	53,000	4.0	---		--	--	--	--	--
4-Chlorophenyl-phenyl ether	mg/kg	---	---	---	---	---	---		--	--	--	--	--
Dibenzofuran	mg/kg	4,100	---	4,100	---	6.1	---		--	--	--	--	--
1,2-Dichlorobenzene	mg/kg	180,000	560	18,000	310	17	---		--	--	--	--	--
1,3-Dichlorobenzene	mg/kg	1,800	570	180	570	0.2	---		--	--	--	--	--
1,4-Dichlorobenzene	mg/kg	---	17,000	---	340	2.0	---		--	--	--	--	--

Table 2 - Terracon Soil Analytical Results - SVOCs
650 West 83rd Street, Chicago, IL
Project Number:A2157000

Analyte	Units	IEPA Tier 1 Soil Remediation Objectives					Background	Sample Identification	B-27 (6-8)	B-28 (1-3)	B-28 (4-6)	B-29 (1-3)	B-29 (4-6)
		Industrial/Commercial Properties		Construction Workers		Soil Component of the Groundwater Ingestion Route		Sample Depth (feet)	6' - 8'	1' - 3'	4' - 6'	1' - 3'	4' - 6'
		Ingestion	Inhalation	Ingestion	Inhalation	Class I	Chicago	Date Collected	6/26/2013	6/28/2013	6/28/2013	6/28/2013	6/28/2013
Semivolatile Organic Analytical Parameters													
Acenaphthene	mg/kg	120,000	—	120,000	—	570	0.09		0.13	< 0.039	< 0.038	0.18	< 0.039
Acenaphthylene	mg/kg	61,000	—	61,000	—	85	0.03		0.055	0.073	< 0.038	0.11	< 0.039
Anthracene	mg/kg	610,000	—	610,000	—	12,000	0.25		0.24	0.21	< 0.038	0.68	< 0.039
Benzo(a)anthracene	mg/kg	8.0	—	170	—	2.0	1.1		0.79	0.68	< 0.038	1.7	0.048
Benzo(a)pyrene	mg/kg	0.8	—	17	—	8.0	1.3		0.89	0.62	< 0.038	1.7	< 0.039
Benzo(b)fluoranthene	mg/kg	8.0	—	170	—	5.0	1.5		1	0.67	< 0.038	1.6	< 0.039
Benzo(g,h,i)perylene	mg/kg	61,000	—	61,000	—	27,000	0.68		0.65	0.41	< 0.038	0.96	< 0.039
Benzo(k)fluoranthene	mg/kg	78	—	1,700	—	49	0.99		0.67	0.44	< 0.038	1.2	< 0.039
Chrysene	mg/kg	780	—	17,000	—	160	1.2		1.1	0.67	< 0.038	1.7	0.045
Dibenzo(a,h)anthracene	mg/kg	0.8	—	17	—	2.0	0.2		0.31	0.2	< 0.038	0.5	< 0.039
Fluoranthene	mg/kg	82,000	—	82,000	—	4,300	2.7		1.6	1.3	< 0.038	3.2	0.09
Fluorene	mg/kg	82,000	—	82,000	—	560	0.1		0.13	0.041	< 0.038	0.23	< 0.039
Indeno(1,2,3-c,d)pyrene	mg/kg	8	—	170	—	14	0.86		0.49	0.34	< 0.038	0.86	< 0.039
Naphthalene	mg/kg	41,000	270	4,100	1.8	12	0.04		0.24	< 0.039	< 0.038	0.062	< 0.039
Phenanthrene	mg/kg	61,000	—	61,000	—	200	1.3		1.3	0.61	< 0.038	2.1	0.092
Pyrene	mg/kg	61,000	—	61,000	—	4,200	1.9		1.7	1.1	< 0.038	2.8	0.075
bis(2-Chloroethoxy) methane	mg/kg	—	—	—	—	—	—		—	—	—	—	—
bis(2-Chloroethyl) ether	mg/kg	5.0	*0.66*	75	*0.66*	*0.66*	—		—	—	—	—	—
bis(2-Ethylhexyl)phthalate	mg/kg	410	31,000	4,100	31,000	3,600	—		—	—	—	—	—
4-Bromophenyl-phenyl ether	mg/kg	—	—	—	—	—	—		—	—	—	—	—
Butylbenzylphthalate	mg/kg	410,000	930	410,000	930	930	—		—	—	—	—	—
Carbazole	mg/kg	290	—	6,200	—	0.6	—		—	—	—	—	—
4-Chloroaniline	mg/kg	8,200	—	820	—	0.7	—		—	—	—	—	—
2-Chloronaphthalene	mg/kg	160,000	—	160,000	—	49	—		—	—	—	—	—
4-Chloro-3-methylphenol	mg/kg	14,000	—	41,000	—	24	—		—	—	—	—	—
2-Chlorophenol	mg/kg	10,000	53,000	10,000	53,000	4.0	—		—	—	—	—	—
4-Chlorophenyl-phenyl ether	mg/kg	—	—	—	—	—	—		—	—	—	—	—
Dibenzofuran	mg/kg	4,100	—	4,100	—	6.1	—		—	—	—	—	—
1,2-Dichlorobenzene	mg/kg	180,000	560	18,000	310	17	—		—	—	—	—	—
1,3-Dichlorobenzene	mg/kg	1,800	570	180	570	0.2	—		—	—	—	—	—
1,4-Dichlorobenzene	mg/kg	—	17,000	—	340	2.0	—		—	—	—	—	—

Table 2 - Terracon Soil Analytical Results - SVOCs
650 West 83rd Street, Chicago, IL
Project Number:A2157000

Analyte	Units	IEPA Tier 1 Soil Remediation Objectives					Background	Sample Identification	B-30 (1-3)	B-30 (4-6)	B-31 (1-3)	B-31 (6-8)	B-32 (1-3)
		Industrial/Commercial Properties		Construction Workers		Soil Component of the Groundwater Ingestion Route		Sample Depth (feet)	1' - 3'	4' - 6'	1' - 3'	6' - 8'	1' - 3'
		Ingestion	Inhalation	Ingestion	Inhalation	Class I	Chicago	Date Collected	6/28/2013	6/28/2013	6/27/2013	6/27/2013	6/26/2013
Semivolatile Organic Analytical Parameters													
Acenaphthene	mg/kg	120,000	—	120,000	—	570	0.09		< 0.042	0.053	0.28	< 0.045	0.1
Acenaphthylene	mg/kg	61,000	—	61,000	—	85	0.03		< 0.042	< 0.042	0.24	< 0.045	0.19
Anthracene	mg/kg	610,000	—	610,000	—	12,000	0.25		< 0.042	0.18	1.1	< 0.045	0.51
Benzo(a)anthracene	mg/kg	8.0	—	170	—	2.0	1.1		< 0.042	0.36	2.8	< 0.045	1.8
Benzo(a)pyrene	mg/kg	0.8	—	17	—	8.0	1.3		< 0.042	0.38	2.8	< 0.045	2.1
Benzo(b)fluoranthene	mg/kg	8.0	—	170	—	5.0	1.5		< 0.042	0.34	2.4	< 0.045	2
Benzo(g,h,i)perylene	mg/kg	61,000	—	61,000	—	27,000	0.68		< 0.042	0.2	1.6	< 0.045	1.2
Benzo(k)fluoranthene	mg/kg	78	—	1,700	—	49	0.99		< 0.042	0.25	2.3	< 0.045	1.6
Chrysene	mg/kg	780	—	17,000	—	160	1.2		< 0.042	0.35	2.9	< 0.045	2
Dibenzo(a,h)anthracene	mg/kg	0.8	—	17	—	2.0	0.2		< 0.042	0.11	0.76	< 0.045	0.57
Fluoranthene	mg/kg	82,000	—	82,000	—	4,300	2.7		< 0.042	0.8	6.1	0.061	3.8
Fluorene	mg/kg	82,000	—	82,000	—	560	0.1		< 0.042	0.057	0.36	< 0.045	0.12
Indeno(1,2,3-c,d)pyrene	mg/kg	8	—	170	—	14	0.86		< 0.042	0.15	1.4	< 0.045	1.1
Naphthalene	mg/kg	41,000	270	4,100	1.8	12	0.04		< 0.042	< 0.042	0.078	< 0.045	0.095
Phenanthrene	mg/kg	61,000	—	61,000	—	200	1.3		< 0.042	0.52	4.1	0.053	1.8
Pyrene	mg/kg	61,000	—	61,000	—	4,200	1.9		< 0.042	0.85	5.3	0.047	3.5
bis(2-Chloroethoxy) methane	mg/kg	—	—	—	—	—	—		--	--	--	--	--
bis(2-Chloroethyl) ether	mg/kg	5.0	*0.66*	75	*0.66*	*0.66*	—		--	--	--	--	--
bis(2-Ethylhexyl)phthalate	mg/kg	410	31,000	4,100	31,000	3,600	—		--	--	--	--	--
4-Bromophenyl-phenyl ether	mg/kg	—	—	—	—	—	—		--	--	--	--	--
Butylbenzylphthalate	mg/kg	410,000	930	410,000	930	930	—		--	--	--	--	--
Carbazole	mg/kg	290	—	6,200	—	0.6	—		--	--	--	--	--
4-Chloroaniline	mg/kg	8,200	—	820	—	0.7	—		--	--	--	--	--
2-Chloronaphthalene	mg/kg	160,000	—	160,000	—	49	—		--	--	--	--	--
4-Chloro-3-methylphenol	mg/kg	14,000	—	41,000	—	24	—		--	--	--	--	--
2-Chlorophenol	mg/kg	10,000	53,000	10,000	53,000	4.0	—		--	--	--	--	--
4-Chlorophenyl-phenyl ether	mg/kg	—	—	—	—	—	—		--	--	--	--	--
Dibenzofuran	mg/kg	4,100	—	4,100	—	6.1	—		--	--	--	--	--
1,2-Dichlorobenzene	mg/kg	180,000	560	18,000	310	17	—		--	--	--	--	--
1,3-Dichlorobenzene	mg/kg	1,800	570	180	570	0.2	—		--	--	--	--	--
1,4-Dichlorobenzene	mg/kg	—	17,000	—	340	2.0	—		--	--	--	--	--

Table 2 - Terracon Soil Analytical Results - SVOCs
650 West 83rd Street, Chicago, IL
Project Number:A2157000

Analyte	Units	IEPA Tier 1 Soil Remediation Objectives					Background	Sample Identification	B-32 (6-8)	B-33 (1-3)	B-33 (4-6)	B-34 (1-3)	B-34 (4-6)
		Industrial/Commercial Properties		Construction Workers		Soil Component of the Groundwater Ingestion Route		Sample Depth (feet)	6' - 8'	1' - 3'	4' - 6'	1' - 3'	4' - 6'
		Ingestion	Inhalation	Ingestion	Inhalation	Class I	Chicago	Date Collected	6/26/2013	6/26/2013	6/26/2013	6/25/2013	6/25/2013
Semivolatile Organic Analytical Parameters													
Acenaphthene	mg/kg	120,000	---	120,000	---	570	0.09		< 0.058	0.071	0.069	0.37	< 0.043
Acenaphthylene	mg/kg	61,000	---	61,000	---	85	0.03		< 0.058	0.061	0.14	0.16	< 0.043
Anthracene	mg/kg	610,000	---	610,000	---	12,000	0.25		< 0.058	0.31	0.5	1.2	0.043
Benzo(a)anthracene	mg/kg	8.0	---	170	---	2.0	1.1		< 0.058	0.79	1.6	2.7	0.1
Benzo(a)pyrene	mg/kg	0.8	---	17	---	8.0	1.3		< 0.058	0.76	1.4	2.5	0.098
Benzo(b)fluoranthene	mg/kg	8.0	---	170	---	5.0	1.5		< 0.058	0.72	1.3	2.1	0.073
Benzo(g,h,i)perylene	mg/kg	61,000	---	61,000	---	27,000	0.68		< 0.058	0.45	0.77	1.2	0.051
Benzo(k)fluoranthene	mg/kg	78	---	1,700	---	49	0.99		< 0.058	0.62	1.1	2.2	0.08
Chrysene	mg/kg	780	---	17,000	---	160	1.2		< 0.058	0.8	1.5	2.9	0.14
Dibenzo(a,h)anthracene	mg/kg	0.8	---	17	---	2.0	0.2		< 0.058	0.24	0.38	0.66	< 0.043
Fluoranthene	mg/kg	82,000	---	82,000	---	4,300	2.7		< 0.058	1.8	3.5	7.5	0.2
Fluorene	mg/kg	82,000	---	82,000	---	560	0.1		< 0.058	0.13	0.16	0.42	< 0.043
Indeno(1,2,3-c,d)pyrene	mg/kg	8	---	170	---	14	0.86		< 0.058	0.39	0.69	1.1	< 0.043
Naphthalene	mg/kg	41,000	270	4,100	1.8	12	0.04		< 0.058	0.049	< 0.041	0.28	< 0.043
Phenanthrene	mg/kg	61,000	---	61,000	---	200	1.3		< 0.058	1.1	1.6	4.5	0.22
Pyrene	mg/kg	61,000	---	61,000	---	4,200	1.9		< 0.058	1.5	2.9	6.5	0.26
bis(2-Chloroethoxy) methane	mg/kg	---	---	---	---	---	---		--	--	--	< 0.2	--
bis(2-Chloroethyl) ether	mg/kg	5.0	*0.66*	75	*0.66*	*0.66*	---		--	--	--	< 0.2	--
bis(2-Ethylhexyl)phthalate	mg/kg	410	31,000	4,100	31,000	3,600	---		--	--	--	< 1	--
4-Bromophenyl-phenyl ether	mg/kg	---	---	---	---	---	---		--	--	--	< 0.2	--
Butylbenzylphthalate	mg/kg	410,000	930	410,000	930	930	---		--	--	--	< 0.2	--
Carbazole	mg/kg	290	---	6,200	---	0.6	---		--	--	--	0.31	--
4-Chloroaniline	mg/kg	8,200	---	820	---	0.7	---		--	--	--	< 0.2	--
2-Chloronaphthalene	mg/kg	160,000	---	160,000	---	49	---		--	--	--	< 0.2	--
4-Chloro-3-methylphenol	mg/kg	14,000	---	41,000	---	24	---		--	--	--	< 0.4	--
2-Chlorophenol	mg/kg	10,000	53,000	10,000	53,000	4.0	---		--	--	--	< 0.2	--
4-Chlorophenyl-phenyl ether	mg/kg	---	---	---	---	---	---		--	--	--	< 0.2	--
Dibenzofuran	mg/kg	4,100	---	4,100	---	6.1	---		--	--	--	< 0.2	--
1,2-Dichlorobenzene	mg/kg	180,000	560	18,000	310	17	---		--	--	--	< 0.2	--
1,3-Dichlorobenzene	mg/kg	1,800	570	180	570	0.2	---		--	--	--	< 0.2	--
1,4-Dichlorobenzene	mg/kg	---	17,000	---	340	2.0	---		--	--	--	< 0.2	--

Table 2 - Terracon Soil Analytical Results - SVOCs
650 West 83rd Street, Chicago, IL
Project Number:A2157000

Analyte	Units	IEPA Tier 1 Soil Remediation Objectives					Background	Sample Identification	B-35 (1-3)	B-35 (4-6)	B-36 (1-3)	B-36 (4-6)	B-37 (1-3)
		Industrial/Commercial Properties		Construction Workers		Soil Component of the Groundwater Ingestion Route		Sample Depth (feet)	1' - 3'	4' - 6'	1' - 3'	4' - 6'	1' - 3'
		Ingestion	Inhalation	Ingestion	Inhalation	Class I	Chicago	Date Collected	6/26/2013	6/26/2013	6/26/2013	6/26/2013	6/27/2013
Semivolatile Organic Analytical Parameters													
Acenaphthene	mg/kg	120,000	—	120,000	—	570	0.09		5.6	17	0.05	0.075	0.73
Acenaphthylene	mg/kg	61,000	—	61,000	—	85	0.03		1.2	2.2	0.05	0.092	0.43
Anthracene	mg/kg	610,000	—	610,000	—	12,000	0.25		15	42	0.12	0.22	2.3
Benzo(a)anthracene	mg/kg	8.0	—	170	—	2.0	1.1		23	72	0.63	0.6	6
Benzo(a)pyrene	mg/kg	0.8	—	17	—	8.0	1.3		21	67	0.79	0.55	5.9
Benzo(b)fluoranthene	mg/kg	8.0	—	170	—	5.0	1.5		17	57	0.79	0.59	6
Benzo(g,h,i)perylene	mg/kg	61,000	—	61,000	—	27,000	0.68		9.8	32	0.51	0.27	3.1
Benzo(k)fluoranthene	mg/kg	78	—	1,700	—	49	0.99		18	52	0.84	0.34	4.7
Chrysene	mg/kg	780	—	17,000	—	160	1.2		23	77	0.83	0.67	6.4
Dibenzo(a,h)anthracene	mg/kg	0.8	—	17	—	2.0	0.2		5.5	16	0.25	0.15	1.6
Fluoranthene	mg/kg	82,000	—	82,000	—	4,300	2.7		48	180	1.3	1.4	13
Fluorene	mg/kg	82,000	—	82,000	—	560	0.1		8.7	20	0.039	0.14	1
Indeno(1,2,3-c,d)pyrene	mg/kg	8	—	170	—	14	0.86		7.7	28	0.42	0.23	2.8
Naphthalene	mg/kg	41,000	270	4,100	1.8	12	0.04		8.1	2.9	< 0.037	0.047	0.54
Phenanthrene	mg/kg	61,000	—	61,000	—	200	1.3		46	160	0.5	1.2	8.9
Pyrene	mg/kg	61,000	—	61,000	—	4,200	1.9		42	160	1.1	1.3	11
bis(2-Chloroethoxy) methane	mg/kg	—	—	—	—	—	—		--	--	--	--	--
bis(2-Chloroethyl) ether	mg/kg	5.0	*0.66*	75	*0.66*	*0.66*	—		--	--	--	--	--
bis(2-Ethylhexyl)phthalate	mg/kg	410	31,000	4,100	31,000	3,600	—		--	--	--	--	--
4-Bromophenyl-phenyl ether	mg/kg	—	—	—	—	—	—		--	--	--	--	--
Butylbenzylphthalate	mg/kg	410,000	930	410,000	930	930	—		--	--	--	--	--
Carbazole	mg/kg	290	—	6,200	—	0.6	—		--	--	--	--	--
4-Chloroaniline	mg/kg	8,200	—	820	—	0.7	—		--	--	--	--	--
2-Chloronaphthalene	mg/kg	160,000	—	160,000	—	49	—		--	--	--	--	--
4-Chloro-3-methylphenol	mg/kg	14,000	—	41,000	—	24	—		--	--	--	--	--
2-Chlorophenol	mg/kg	10,000	53,000	10,000	53,000	4.0	—		--	--	--	--	--
4-Chlorophenyl-phenyl ether	mg/kg	—	—	—	—	—	—		--	--	--	--	--
Dibenzofuran	mg/kg	4,100	—	4,100	—	6.1	—		--	--	--	--	--
1,2-Dichlorobenzene	mg/kg	180,000	560	18,000	310	17	—		--	--	--	--	--
1,3-Dichlorobenzene	mg/kg	1,800	570	180	570	0.2	—		--	--	--	--	--
1,4-Dichlorobenzene	mg/kg	—	17,000	—	340	2.0	—		--	--	--	--	--

Table 2 - Terracon Soil Analytical Results - SVOCs
650 West 83rd Street, Chicago, IL
Project Number:A2157000

Analyte	Units	IEPA Tier 1 Soil Remediation Objectives					Background	Sample Identification	B-37 (6-8)	B-101 (6-8)	B-103 (6-8)	B-104 (6-8)	B-105 (6-8)
		Industrial/Commercial Properties		Construction Workers		Soil Component of the Groundwater Ingestion Route		Sample Depth (feet)	6' - 8'	6' - 8'	6' - 8'	6' - 8'	6' - 8'
		Ingestion	Inhalation	Ingestion	Inhalation	Class I	Chicago	Date Collected	6/27/2013	9/27/2013	9/27/2013	9/27/2013	9/27/2013
Semivolatile Organic Analytical Parameters													
Acenaphthene	mg/kg	120,000	---	120,000	---	570	0.09		0.34	0.4	190	84	33
Acenaphthylene	mg/kg	61,000	---	61,000	---	85	0.03		0.094	0.056	65	48	18
Anthracene	mg/kg	610,000	---	610,000	---	12,000	0.25		0.87	0.72	380	220	76
Benzo(a)anthracene	mg/kg	8.0	---	170	---	2.0	1.1		1.7	1.5	560	300	130
Benzo(a)pyrene	mg/kg	0.8	---	17	---	8.0	1.3		1.6	1.5	500	300	120
Benzo(b)fluoranthene	mg/kg	8.0	---	170	---	5.0	1.5		1.1	1.2	470	250	96
Benzo(g,h,i)perylene	mg/kg	61,000	---	61,000	---	27,000	0.68		0.8	0.99	350	160	73
Benzo(k)fluoranthene	mg/kg	78	---	1,700	---	49	0.99		1.1	1.2	420	230	91
Chrysene	mg/kg	780	---	17,000	---	160	1.2		1.8	1.6	570	290	130
Dibenzo(a,h)anthracene	mg/kg	0.8	---	17	---	2.0	0.2		0.39	0.47	170	81	39
Fluoranthene	mg/kg	82,000	---	82,000	---	4,300	2.7		3	3	1300	550	300
Fluorene	mg/kg	82,000	---	82,000	---	560	0.1		0.38	0.48	280	170	51
Indeno(1,2,3-c,d)pyrene	mg/kg	8	---	170	---	14	0.86		0.65	0.88	320	140	66
Naphthalene	mg/kg	41,000	270	4,100	1.8	12	0.04		0.12	1	510	250	54
Phenanthrene	mg/kg	61,000	---	61,000	---	200	1.3		4.1	3	1300	680	300
Pyrene	mg/kg	61,000	---	61,000	---	4,200	1.9		4.1	2.8	1200	480	260
bis(2-Chloroethoxy) methane	mg/kg	---	---	---	---	---	---		--	--	--	--	--
bis(2-Chloroethyl) ether	mg/kg	5.0	*0.66*	75	*0.66*	*0.66*	---		--	--	--	--	--
bis(2-Ethylhexyl)phthalate	mg/kg	410	31,000	4,100	31,000	3,600	---		--	--	--	--	--
4-Bromophenyl-phenyl ether	mg/kg	---	---	---	---	---	---		--	--	--	--	--
Butylbenzylphthalate	mg/kg	410,000	930	410,000	930	930	---		--	--	--	--	--
Carbazole	mg/kg	290	---	6,200	---	0.6	---		--	--	--	--	--
4-Chloroaniline	mg/kg	8,200	---	820	---	0.7	---		--	--	--	--	--
2-Chloronaphthalene	mg/kg	160,000	---	160,000	---	49	---		--	--	--	--	--
4-Chloro-3-methylphenol	mg/kg	14,000	---	41,000	---	24	---		--	--	--	--	--
2-Chlorophenol	mg/kg	10,000	53,000	10,000	53,000	4.0	---		--	--	--	--	--
4-Chlorophenyl-phenyl ether	mg/kg	---	---	---	---	---	---		--	--	--	--	--
Dibenzofuran	mg/kg	4,100	---	4,100	---	6.1	---		--	--	--	--	--
1,2-Dichlorobenzene	mg/kg	180,000	560	18,000	310	17	---		--	--	--	--	--
1,3-Dichlorobenzene	mg/kg	1,800	570	180	570	0.2	---		--	--	--	--	--
1,4-Dichlorobenzene	mg/kg	---	17,000	---	340	2.0	---		--	--	--	--	--

Table 2 - Terracon Soil Analytical Results - SVOCs
650 West 83rd Street, Chicago, IL
Project Number:A2157000

Analyte	Units	IEPA Tier 1 Soil Remediation Objectives					Background	Sample Identification	B-107 (6-8)	B-122 (1-3)	B-123 (1-3)	B-124 (1-3)	B-124 (4-6)
		Industrial/Commercial Properties		Construction Workers		Soil Component of the Groundwater Ingestion Route		Sample Depth (feet)	6' - 8'	1' - 3'	1' - 3'	1' - 3'	4' - 6'
		Ingestion	Inhalation	Ingestion	Inhalation	Class I	Chicago	Date Collected	9/27/2013	9/26/2013	9/26/2013	9/27/2013	9/27/2013
Semivolatile Organic Analytical Parameters													
Acenaphthene	mg/kg	120,000	—	120,000	---	570	0.09		< 0.044	< 0.37	< 0.042	0.054	< 0.038
Acenaphthylene	mg/kg	61,000	---	61,000	---	85	0.03		0.07	< 0.37	< 0.042	< 0.041	0.039
Anthracene	mg/kg	610,000	—	610,000	---	12,000	0.25		0.1	0.45	0.12	0.1	0.058
Benzo(a)anthracene	mg/kg	8.0	—	170	---	2.0	1.1		0.5	1.3	0.54	0.2	0.26
Benzo(a)pyrene	mg/kg	0.8	---	17	—	8.0	1.3		0.64	1.5	0.47	0.2	0.28
Benzo(b)fluoranthene	mg/kg	8.0	---	170	---	5.0	1.5		0.46	1.2	0.54	0.17	0.21
Benzo(g,h,i)perylene	mg/kg	61,000	—	61,000	—	27,000	0.68		0.47	1.2	0.38	0.13	0.21
Benzo(k)fluoranthene	mg/kg	78	---	1,700	—	49	0.99		0.45	0.91	0.37	0.15	0.21
Chrysene	mg/kg	780	—	17,000	—	160	1.2		0.52	1.4	0.56	0.22	0.25
Dibenzo(a,h)anthracene	mg/kg	0.8	—	17	---	2.0	0.2		0.19	0.57	0.21	0.072	0.095
Fluoranthene	mg/kg	82,000	—	82,000	—	4,300	2.7		0.89	2.1	0.95	0.42	0.5
Fluorene	mg/kg	82,000	---	82,000	—	560	0.1		< 0.044	< 0.37	< 0.042	0.049	< 0.038
Indeno(1,2,3-c,d)pyrene	mg/kg	8	—	170	---	14	0.86		0.37	0.95	0.37	0.11	0.18
Naphthalene	mg/kg	41,000	270	4,100	1.8	12	0.04		< 0.044	< 0.37	< 0.042	0.082	< 0.038
Phenanthrene	mg/kg	61,000	—	61,000	---	200	1.3		0.28	1.2	0.53	0.43	0.2
Pyrene	mg/kg	61,000	---	61,000	—	4,200	1.9		1	2	0.79	0.41	0.48
bis(2-Chloroethoxy) methane	mg/kg	---	—	---	---	—	---		–	--	--	--	--
bis(2-Chloroethyl) ether	mg/kg	5.0	*0.66*	75	*0.66*	*0.66*	—		–	--	--	--	--
bis(2-Ethythexyl)phthalate	mg/kg	410	31,000	4,100	31,000	3,600	—		–	–	–	–	–
4-Bromophenyl-phenyl ether	mg/kg	—	—	---	---	---	—		–	--	--	--	--
Butylbenzylphthalate	mg/kg	410,000	930	410,000	930	930	—		–	–	–	–	–
Carbazole	mg/kg	290	---	6,200	—	0.6	—		--	–	–	–	--
4-Chloroaniline	mg/kg	8,200	—	820	---	0.7	---		–	–	–	–	–
2-Chloronaphthalene	mg/kg	160,000	—	160,000	---	49	—		–	–	--	--	--
4-Chloro-3-methylphenol	mg/kg	14,000	---	41,000	---	24	—		--	–	–	–	–
2-Chlorophenol	mg/kg	10,000	53,000	10,000	53,000	4.0	---		–	--	--	--	--
4-Chlorophenyl-phenyl ether	mg/kg	—	---	---	—	---	—		--	–	–	–	–
Dibenzofuran	mg/kg	4,100	—	4,100	---	6.1	---		–	–	–	–	–
1,2-Dichlorobenzene	mg/kg	180,000	560	18,000	310	17	—		–	--	--	--	--
1,3-Dichlorobenzene	mg/kg	1,800	570	180	570	0.2	—		--	–	–	--	--
1,4-Dichlorobenzene	mg/kg	---	17,000	---	340	2.0	---		–	–	–	–	–

Table 2 - Terracon Soil Analytical Results - SVOCs
650 West 83rd Street, Chicago, IL
Project Number:A2157000

Analyte	Units	IEPA Tier 1 Soil Remediation Objectives					Background	Sample Identification	B-125 (1-3)	B-125 (4-6)	B-126 (1-3)	B-126 (4-6)	B-127 (1-3)
		Industrial/Commercial Properties		Construction Workers		Soil Component of the Groundwater Ingestion Route		Sample Depth (feet)	1' - 3'	4' - 6'	1' - 3'	4' - 6'	1' - 3'
		Ingestion	Inhalation	Ingestion	Inhalation	Class I	Chicago	Date Collected	9/27/2013	9/27/2013	9/27/2013	9/27/2013	9/27/2013
Semivolatile Organic Analytical Parameters													
Acenaphthene	mg/kg	120,000	—	120,000	—	570	0.09		0.23	< 0.044	< 0.04	< 0.043	1.2
Acenaphthylene	mg/kg	61,000	---	61,000	---	85	0.03		0.08	< 0.044	< 0.04	< 0.043	< 0.36
Anthracene	mg/kg	610,000	—	610,000	—	12,000	0.25		0.62	< 0.044	< 0.04	< 0.043	2.7
Benzo(a)anthracene	mg/kg	8.0	---	170	---	2.0	1.1		2.3	< 0.044	< 0.04	< 0.043	12
Benzo(a)pyrene	mg/kg	0.8	---	17	---	8.0	1.3		2.4	< 0.044	< 0.04	< 0.043	11
Benzo(b)fluoranthene	mg/kg	8.0	---	170	---	5.0	1.5		2.4	< 0.044	< 0.04	< 0.043	13
Benzo(g,h,i)perylene	mg/kg	61,000	—	61,000	—	27,000	0.68		1.6	< 0.044	< 0.04	< 0.043	7.2
Benzo(k)fluoranthene	mg/kg	78	---	1,700	---	49	0.99		1.9	< 0.044	< 0.04	< 0.043	9.3
Chrysene	mg/kg	780	—	17,000	---	160	1.2		2.5	< 0.044	< 0.04	0.044	14
Dibenzo(a,h)anthracene	mg/kg	0.8	---	17	---	2.0	0.2		0.8	< 0.044	< 0.04	< 0.043	3.9
Fluoranthene	mg/kg	82,000	—	82,000	---	4,300	2.7		4.2	< 0.044	< 0.04	0.055	28
Fluorene	mg/kg	82,000	---	82,000	---	560	0.1		0.23	< 0.044	< 0.04	< 0.043	0.94
Indeno(1,2,3-c,d)pyrene	mg/kg	8	—	170	---	14	0.86		1.5	< 0.044	< 0.04	< 0.043	6.8
Naphthalene	mg/kg	41,000	270	4,100	1.8	12	0.04		0.093	< 0.044	< 0.04	< 0.043	< 0.36
Phenanthrene	mg/kg	61,000	—	61,000	---	200	1.3		2.6	< 0.044	< 0.04	0.045	14
Pyrene	mg/kg	61,000	---	61,000	---	4,200	1.9		4.1	< 0.044	< 0.04	0.079	22
bis(2-Chloroethoxy) methane	mg/kg	---	---	---	---	---	---		--	--	--	--	--
bis(2-Chloroethyl) ether	mg/kg	5.0	*0.66*	75	*0.66*	*0.66*	---		--	--	--	--	--
bis(2-Ethylhexyl)phthalate	mg/kg	410	31,000	4,100	31,000	3,600	—		--	--	--	--	--
4-Bromophenyl-phenyl ether	mg/kg	---	---	---	---	---	---		--	--	--	--	--
Butylbenzylphthalate	mg/kg	410,000	930	410,000	930	930	—		--	--	--	--	--
Carbazole	mg/kg	290	—	6,200	—	0.6	---		--	--	--	--	--
4-Chloroaniline	mg/kg	8,200	---	820	---	0.7	---		--	--	--	--	--
2-Chloronaphthalene	mg/kg	160,000	---	160,000	---	49	---		--	--	--	--	--
4-Chloro-3-methylphenol	mg/kg	14,000	---	41,000	---	24	—		--	--	--	--	--
2-Chlorophenol	mg/kg	10,000	53,000	10,000	53,000	4.0	---		--	--	--	--	--
4-Chlorophenyl-phenyl ether	mg/kg	---	---	---	---	---	---		--	--	--	--	--
Dibenzofuran	mg/kg	4,100	—	4,100	—	6.1	—		--	--	--	--	--
1,2-Dichlorobenzene	mg/kg	180,000	560	18,000	310	17	---		--	--	--	--	--
1,3-Dichlorobenzene	mg/kg	1,800	570	180	570	0.2	---		--	--	--	--	--
1,4-Dichlorobenzene	mg/kg	---	17,000	---	340	2.0	---		--	--	--	--	--

Table 2 - Terracon Soil Analytical Results - SVOCs
650 West 83rd Street, Chicago, IL
Project Number:A2157000

Analyte	Units	IEPA Tier 1 Soil Remediation Objectives					Background	Sample Identification	B-128 (1-3)	B-129 (1-3)	B-130 (1-3)	B-130 (4-6)	B-131 (1-3)
		Industrial/Commercial Properties		Construction Workers		Soil Component of the Groundwater Ingestion Route		Sample Depth (feet)	1' - 3'	1' - 3'	1' - 3'	4' - 6'	1' - 3'
		Ingestion	Inhalation	Ingestion	Inhalation	Class I	Chicago	Date Collected	9/27/2013	9/27/2013	9/27/2013	9/27/2013	9/27/2013
Semivolatile Organic Analytical Parameters													
Acenaphthene	mg/kg	120,000	—	120,000	---	570	0.09		0.26	0.14	1.1	< 0.041	1.1
Acenaphthylene	mg/kg	61,000	---	61,000	—	85	0.03		0.13	0.062	0.78	< 0.041	1.2
Anthracene	mg/kg	610,000	—	610,000	---	12,000	0.25		1.2	0.52	5.3	0.23	4.9
Benzo(a)anthracene	mg/kg	8.0	---	170	—	2.0	1.1		3.7	2.2	14	0.94	14
Benzo(a)pyrene	mg/kg	0.8	—	17	---	8.0	1.3		3.5	2.3	12	0.91	12
Benzo(b)fluoranthene	mg/kg	8.0	—	170	---	5.0	1.5		3.1	2.4	9.4	0.51	8
Benzo(g,h,i)perylene	mg/kg	61,000	—	61,000	—	27,000	0.68		2.4	1.6	7.2	0.46	7.4
Benzo(k)fluoranthene	mg/kg	78	---	1,700	—	49	0.99		3.1	1.8	9.5	0.56	9.2
Chrysene	mg/kg	780	—	17,000	---	160	1.2		3.9	2.4	15	0.84	15
Dibenzo(a,h)anthracene	mg/kg	0.8	---	17	—	2.0	0.2		1.3	0.79	3.6	0.21	3.5
Fluoranthene	mg/kg	82,000	—	82,000	---	4,300	2.7		7.1	4.1	29	1.4	26
Fluorene	mg/kg	82,000	---	82,000	—	560	0.1		0.34	0.14	1.5	< 0.041	1.8
Indeno(1,2,3-c,d)pyrene	mg/kg	8	—	170	---	14	0.86		2.2	1.5	6.5	0.32	6.2
Naphthalene	mg/kg	41,000	270	4,100	1.8	12	0.04		0.13	< 0.041	0.24	< 0.041	0.26
Phenanthrene	mg/kg	61,000	—	61,000	---	200	1.3		4.6	1.9	19	0.21	22
Pyrene	mg/kg	61,000	---	61,000	—	4,200	1.9		5.8	3.7	30	2.5	33
bis(2-Chloroethoxy) methane	mg/kg	---	—	—	---	—	—		--	--	--	--	--
bis(2-Chloroethyl) ether	mg/kg	5.0	*0.66*	75	*0.66*	*0.66*	—		--	--	--	--	--
bis(2-Ethylhexyl)phthalate	mg/kg	410	31,000	4,100	31,000	3,600	—		--	--	--	--	--
4-Bromophenyl-phenyl ether	mg/kg	—	—	---	---	—	---		--	--	--	--	--
Butylbenzylphthalate	mg/kg	410,000	930	410,000	930	930	—		--	--	--	--	--
Carbazole	mg/kg	290	—	6,200	—	0.6	---		--	--	--	--	--
4-Chloroaniline	mg/kg	8,200	—	820	---	0.7	—		--	--	--	--	--
2-Chloronaphthalene	mg/kg	160,000	—	160,000	---	49	—		--	--	--	--	--
4-Chloro-3-methylphenol	mg/kg	14,000	---	41,000	—	24	—		--	--	--	--	--
2-Chlorophenol	mg/kg	10,000	53,000	10,000	53,000	4.0	—		--	--	--	--	--
4-Chlorophenyl-phenyl ether	mg/kg	—	---	---	—	---	---		--	--	--	--	--
Dibenzofuran	mg/kg	4,100	—	4,100	---	6.1	—		--	--	--	--	--
1,2-Dichlorobenzene	mg/kg	180,000	560	18,000	310	17	---		--	--	--	--	--
1,3-Dichlorobenzene	mg/kg	1,800	570	180	570	0.2	---		--	--	--	--	--
1,4-Dichlorobenzene	mg/kg	---	17,000	—	340	2.0	—		--	--	--	--	--

Table 2 - Terracon Soil Analytical Results - SVOCs
650 West 83rd Street, Chicago, IL
Project Number:A2157000

Analyte	Units	IEPA Tier 1 Soil Remediation Objectives					Background	Sample Identification	B-131 (4-6)	B-132 (1-3)	B-132 (4-6)	B-133 (1-3)	B-133 (4-6)
		Industrial/Commercial Properties		Construction Workers		Soil Component of the Groundwater Ingestion Route		Sample Depth (feet)	4' - 6'	1' - 3'	4' - 6'	1' - 3'	4' - 6'
		Ingestion	Inhalation	Ingestion	Inhalation	Class I	Chicago	Date Collected	9/27/2013	9/27/2013	9/27/2013	9/27/2013	9/27/2013
Semivolatile Organic Analytical Parameters													
Acenaphthene	mg/kg	120,000	—	120,000	—	570	0.09		0.078	1	0.29	6.2	< 0.05
Acenaphthylene	mg/kg	61,000	—	61,000	—	85	0.03		0.11	0.51	0.15	4.2	< 0.05
Anthracene	mg/kg	610,000	—	610,000	—	12,000	0.25		0.4	3.8	0.97	18	0.052
Benzo(a)anthracene	mg/kg	8.0	—	170	—	2.0	1.1		1.1	11	3.6	39	0.12
Benzo(a)pyrene	mg/kg	0.8	—	17	—	8.0	1.3		1.2	9.7	3.2	36	0.12
Benzo(b)fluoranthene	mg/kg	8.0	—	170	—	5.0	1.5		1	7.8	2.2	30	0.092
Benzo(g,h,i)perylene	mg/kg	61,000	—	61,000	—	27,000	0.68		0.77	6.1	2	22	0.089
Benzo(k)fluoranthene	mg/kg	78	—	1,700	—	49	0.99		1	7.5	2.6	31	0.093
Chrysene	mg/kg	780	—	17,000	—	160	1.2		1.1	12	3.7	42	0.13
Dibenzo(a,h)anthracene	mg/kg	0.8	—	17	—	2.0	0.2		0.39	3.3	0.98	12	< 0.05
Fluoranthene	mg/kg	82,000	—	82,000	—	4,300	2.7		2.3	22	6.1	86	0.25
Fluorene	mg/kg	82,000	—	82,000	—	560	0.1		0.19	1.2	0.35	9.7	< 0.05
Indeno(1,2,3-c,d)pyrene	mg/kg	8	—	170	—	14	0.86		0.67	5.5	1.6	20	0.054
Naphthalene	mg/kg	41,000	270	4,100	1.8	12	0.04		< 0.048	0.62	0.17	5.4	< 0.05
Phenanthrene	mg/kg	61,000	—	61,000	—	200	1.3		1.4	12	3.4	79	0.2
Pyrene	mg/kg	61,000	—	61,000	—	4,200	1.9		2	21	7.4	76	0.26
bis(2-Chloroethoxy) methane	mg/kg	—	—	—	—	—	—		--	--	--	--	--
bis(2-Chloroethyl) ether	mg/kg	5.0	*0.66*	75	*0.66*	*0.66*	—		--	--	--	--	--
bis(2-Ethylhexyl)phthalate	mg/kg	410	31,000	4,100	31,000	3,600	—		--	--	--	--	--
4-Bromophenyl-phenyl ether	mg/kg	—	—	—	—	—	—		--	--	--	--	--
Butylbenzylphthalate	mg/kg	410,000	930	410,000	930	930	—		--	--	--	--	--
Carbazole	mg/kg	290	—	6,200	—	0.6	—		--	--	--	--	--
4-Chloroaniline	mg/kg	8,200	—	820	—	0.7	—		--	--	--	--	--
2-Chloronaphthalene	mg/kg	160,000	—	160,000	—	49	—		--	--	--	--	--
4-Chloro-3-methylphenol	mg/kg	14,000	—	41,000	—	24	—		--	--	--	--	--
2-Chlorophenol	mg/kg	10,000	53,000	10,000	53,000	4.0	—		--	--	--	--	--
4-Chlorophenyl-phenyl ether	mg/kg	—	—	—	—	—	—		--	--	--	--	--
Dibenzofuran	mg/kg	4,100	—	4,100	—	6.1	—		--	--	--	--	--
1,2-Dichlorobenzene	mg/kg	180,000	560	18,000	310	17	—		--	--	--	--	--
1,3-Dichlorobenzene	mg/kg	1,800	570	180	570	0.2	—		--	--	--	--	--
1,4-Dichlorobenzene	mg/kg	—	17,000	—	340	2.0	—		--	--	--	--	--

Table 2 - Terracon Soil Analytical Results - SVOCs
650 West 83rd Street, Chicago, IL
Project Number:A2157000

Analyte	Units	IEPA Tier 1 Soil Remediation Objectives					Background	Sample Identification	B-207 (6-8')	B-208 (6-8')	B-209 (6-8')
		Industrial/Commercial Properties		Construction Workers		Soil Component of the Groundwater Ingestion Route		Sample Depth (feet)	(6-8')	(6-8')	(6-8')
		Ingestion	Inhalation	Ingestion	Inhalation	Class I	Chicago	Date Collected	02/20/2015	02/20/2015	02/20/2015
Semivolatile Organic Analytical Parameters											
Acenaphthene	mg/kg	120,000	—	120,000	—	570	0.09		0.42	9.0	0.11
Acenaphthylene	mg/kg	61,000	—	61,000	—	85	0.03		0.21	6.3	0.11
Anthracene	mg/kg	610,000	—	610,000	—	12,000	0.25		1.4	26	0.20
Benzo(a)anthracene	mg/kg	8.0	—	170	—	2.0	1.1		3.3	34	0.56
Benzo(a)pyrene	mg/kg	0.8	—	17	—	8.0	1.3		2.8	30	0.53
Benzo(b)fluoranthene	mg/kg	8.0	—	170	—	5.0	1.5		2.1	25	0.61
Benzo(g,h,i)perylene	mg/kg	61,000	—	61,000	—	27,000	0.68		1.8	14	0.36
Benzo(k)fluoranthene	mg/kg	78	—	1,700	—	49	0.99		2.0	25	0.37
Chrysene	mg/kg	780	—	17,000	—	160	1.2		3.6	31	0.70
Dibenzo(a,h)anthracene	mg/kg	0.8	—	17	—	2.0	0.2		0.90	8.4	0.19
Fluoranthene	mg/kg	82,000	—	82,000	—	4,300	2.7		6.1	70	1.2
Fluorene	mg/kg	82,000	—	82,000	—	560	0.1		0.56	20	0.078
Indeno(1,2,3-c,d)pyrene	mg/kg	8	—	170	—	14	0.86		1.4	14	0.28
Naphthalene	mg/kg	41,000	270	4,100	1.8	12	0.04		0.26	32	< 0.046
Phenanthrene	mg/kg	61,000	—	61,000	—	200	1.3		5.0	88	0.80
Pyrene	mg/kg	61,000	—	61,000	—	4,200	1.9		7.2	57	1.2
bis(2-Chloroethoxy) methane	mg/kg	—	—	—	—	—	—		--	--	--
bis(2-Chloroethyl) ether	mg/kg	5.0	*0.66*	75	*0.66*	*0.66*	—		--	--	--
bis(2-Ethylhexyl)phthalate	mg/kg	410	31,000	4,100	31,000	3,600	—		--	--	--
4-Bromophenyl-phenyl ether	mg/kg	—	—	—	—	—	—		--	--	--
Butylbenzylphthalate	mg/kg	410,000	930	410,000	930	930	—		--	--	--
Carbazole	mg/kg	290	—	6,200	—	0.6	—		--	--	--
4-Chloroaniline	mg/kg	8,200	—	820	—	0.7	—		--	--	--
2-Chloronaphthalene	mg/kg	160,000	—	160,000	—	49	—		--	--	--
4-Chloro-3-methylphenol	mg/kg	14,000	—	41,000	—	24	—		--	--	--
2-Chlorophenol	mg/kg	10,000	53,000	10,000	53,000	4.0	—		--	--	--
4-Chlorophenyl-phenyl ether	mg/kg	—	—	—	—	—	—		--	--	--
Dibenzofuran	mg/kg	4,100	—	4,100	—	6.1	—		--	--	--
1,2-Dichlorobenzene	mg/kg	180,000	560	18,000	310	17	—		--	--	--
1,3-Dichlorobenzene	mg/kg	1,800	570	180	570	0.2	—		--	--	--
1,4-Dichlorobenzene	mg/kg	—	17,000	—	340	2.0	—		--	--	--

Table 2 - Terracon Soil Analytical Results - SVOCs
650 West 83rd Street, Chicago, IL
Project Number:A2157000

Analyte	Units	IEPA Tier 1 Soil Remediation Objectives					Background	Sample Identification	B-1 (1-3)	B-1 (4-6)	B-2 (1-3)	B-2 (6-8)	B-3 (1-3)
		Industrial/Commercial Properties		Construction Workers		Soil Component of the Groundwater Ingestion Route		Sample Depth (feet)	1' - 3'	4' - 6'	1' - 3'	6' - 8'	1' - 3'
		Ingestion	Inhalation	Ingestion	Inhalation	Class I	Chicago	Date Collected	6/27/2013	6/27/2013	6/27/2013	6/27/2013	6/27/2013
Semivolatile Organic Analytical Parameters													
3,3'-Dichlorobenzidine	mg/kg	13	---	280	---	*1.3*	---		< 1.8	< 0.2	--	--	--
2,4-Dichlorophenol	mg/kg	6,100	---	610	---	1.0	---		< 1.8	< 0.2	--	--	--
Diethylphthalate	mg/kg	1,000,000	2,000	1,000,000	2,000	470	---		< 1.8	< 0.2	--	--	--
Dimethylphthalate	mg/kg	1,000,000	1,300	1,000,000	1,300	380	---		< 1.8	< 0.2	--	--	--
Di-n-butylphthalate	mg/kg	200,000	2,300	200,000	2,300	2,300	---		< 1.8	< 0.2	--	--	--
2,4-Dimethylphenol	mg/kg	41,000	---	41,000	---	9.0	---		< 1.8	< 0.2	--	--	--
4,6-Dinitro-2-methylphenol	mg/kg	200	---	820	---	---	---		< 3.5	< 0.38	--	--	--
2,4-Dinitrophenol	mg/kg	4,100	---	410	---	*3.3*	---		< 8.9	< 0.96	--	--	--
2,4-Dinitrotoluene	mg/kg	8.4	---	180	---	*0.25*	---		< 0.35	< 0.038	--	--	--
2,6-dinitrotoluene	mg/kg	8.4	---	180	---	*0.26*	---		< 0.35	< 0.038	--	--	--
Di-n-octylphthalate	mg/kg	41,000	10,000	4,100	10,000	10,000	---		< 1.8	< 0.2	--	--	--
Hexachlorobenzene	mg/kg	4.00000	1.8	78	2.6	2.0	---		< 1.8	< 0.2	--	--	--
Hexachlorobutadiene	mg/kg	410	1,000	41	180	2.90000	---		< 1.8	< 0.2	--	--	--
Hexachlorocyclopentadiene	mg/kg	14,000	16	14,000	1.10000	400	---		< 1.8	< 0.2	--	--	--
Hexachloroethane	mg/kg	2,000	---	2,000	---	0.5	---		< 1.8	< 0.2	--	--	--
Isophorone	mg/kg	410,000	4,600	410,000	4,600	8.0	---		< 1.8	< 0.2	--	--	--
2-Methylnaphthalene	mg/kg	8,200	---	820	---	7.2	---		< 1.8	< 0.2	--	--	--
2-Methylphenol	mg/kg	100,000	---	100,000	---	15	---		< 1.8	< 0.2	--	--	--
4-Methylphenol	mg/kg	10,000	---	1,000	---	0.2	---		< 1.8	< 0.2	--	--	--
2-Nitroaniline	mg/kg	6,100	56	610	3.6	0.14	---		< 1.8	< 0.2	--	--	--
3-Nitroanaline	mg/kg	610	400	61	26	0.01	---		< 1.8	< 0.2	--	--	--
4-Nitroaniline	mg/kg	6,100	1,600	610	110	0.1	---		< 1.8	< 0.2	--	--	--
Nitrobenzene	mg/kg	1,000	140	1,000	9.4	*0.26*	---		< 0.35	< 0.038	--	--	--
2-Nitrophenol	mg/kg	---	---	---	---	---	---		< 1.8	< 0.2	--	--	--
4-Nitrophenol	mg/kg	16,000	---	16,000	---	---	---		< 3.5	< 0.38	--	--	--
N-Nitroso-di-n-propylamine	mg/kg	0.8	---	18	---	0.0018	---		< 0.35	< 0.038	--	--	--
N-nitrosodiphenylamine	mg/kg	41,000	270	4,100	1.8	1.0	---		< 0.35	< 0.038	--	--	--
2,2'-oxybis (1-chloropropane)	mg/kg	82,000	1,300	8,200	1,300	2.4	---		< 1.8	< 0.2	--	--	--
Pentachlorophenol	mg/kg	24	---	520	---	0.03	---		< 0.72	< 0.077	--	--	--
Phenol	mg/kg	610,000	---	61,000	---	100	---		< 1.8	< 0.2	--	--	--
1,2,4-Trichlorobenzene	mg/kg	20,000	3,200	2,000	920	5.0	---		< 1.8	< 0.2	--	--	--
2,4,5-Trichlorophenol	mg/kg	200,000	---	200,000	---	270	---		< 1.8	< 0.2	--	--	--
2,4,6-Trichlorophenol	mg/kg	520	390	11,000	540	*0.66*	---		< 1.8	< 0.2	--	--	--

Table 2 - Terracon Soil Analytical Results - SVOCs
650 West 83rd Street, Chicago, IL
Project Number:A2157000

Analyte	Units	IEPA Tier 1 Soil Remediation Objectives					Background	Sample Identification	B-3 (4-6)	B-4 (1-3)	B-4 (4-6)	B-5 (1-3)	B-5 (4-6)
		Industrial/Commercial Properties		Construction Workers		Soil Component of the Groundwater Ingestion Route		Sample Depth (feet)	4' - 6'	1' - 3'	4' - 6'	1' - 3'	4' - 6'
		Ingestion	Inhalation	Ingestion	Inhalation	Class I	Chicago	Date Collected	6/27/2013	6/27/2013	6/27/2013	6/25/2013	6/25/2013
Semivolatile Organic Analytical Parameters													
3,3'-Dichlorobenzidine	mg/kg	13	—	280	—	*1.3*	—		—	—	—	—	—
2,4-Dichlorophenol	mg/kg	6,100	—	610	—	1.0	—		—	—	—	—	—
Diethylphthalate	mg/kg	1,000,000	2,000	1,000,000	2,000	470	—		—	—	—	—	—
Dimethylphthalate	mg/kg	1,000,000	1,300	1,000,000	1,300	380	—		—	—	—	—	—
Di-n-butylphthalate	mg/kg	200,000	2,300	200,000	2,300	2,300	—		—	—	—	—	—
2,4-Dimethylphenol	mg/kg	41,000	—	41,000	—	9.0	—		—	—	—	—	—
4,6-Dinitro-2-methylphenol	mg/kg	200	—	820	—	—	—		—	—	—	—	—
2,4-Dinitrophenol	mg/kg	4,100	—	410	—	*3.3*	—		—	—	—	—	—
2,4-Dinitrotoluene	mg/kg	8.4	—	180	—	*0.25*	—		—	—	—	—	—
2,6-dinitrotoluene	mg/kg	8.4	—	180	—	*0.26*	—		—	—	—	—	—
Di-n-octylphthalate	mg/kg	41,000	10,000	4,100	10,000	10,000	—		—	—	—	—	—
Hexachlorobenzene	mg/kg	4.00000	1.8	78	2.6	2.0	—		—	—	—	—	—
Hexachlorobutadiene	mg/kg	410	1,000	41	180	2.90000	—		—	—	—	—	—
Hexachlorocyclopentadiene	mg/kg	14,000	16	14,000	1.10000	400	—		—	—	—	—	—
Hexachloroethane	mg/kg	2,000	—	2,000	—	0.5	—		—	—	—	—	—
Isophorone	mg/kg	410,000	4,600	410,000	4,600	8.0	—		—	—	—	—	—
2-Methylnaphthalene	mg/kg	8,200	—	820	—	7.2	—		—	—	—	—	—
2-Methylphenol	mg/kg	100,000	—	100,000	—	15	—		—	—	—	—	—
4-Methylphenol	mg/kg	10,000	—	1,000	—	0.2	—		—	—	—	—	—
2-Nitroaniline	mg/kg	6,100	56	610	3.6	0.14	—		—	—	—	—	—
3-Nitroanaline	mg/kg	610	400	61	26	0.01	—		—	—	—	—	—
4-Nitroaniline	mg/kg	6,100	1,600	610	110	0.1	—		—	—	—	—	—
Nitrobenzene	mg/kg	1,000	140	1,000	9.4	*0.26*	—		—	—	—	—	—
2-Nitrophenol	mg/kg	—	—	—	—	—	—		—	—	—	—	—
4-Nitrophenol	mg/kg	16,000	—	16,000	—	—	—		—	—	—	—	—
N-Nitroso-di-n-propylamine	mg/kg	0.8	—	18	—	0.0018	—		—	—	—	—	—
N-nitrosodiphenylamine	mg/kg	41,000	270	4,100	1.8	1.0	—		—	—	—	—	—
2,2'-oxybis (1-chloropropane)	mg/kg	82,000	1,300	8,200	1,300	2.4	—		—	—	—	—	—
Pentachlorophenol	mg/kg	24	—	520	—	0.03	—		—	—	—	—	—
Phenol	mg/kg	610,000	—	61,000	—	100	—		—	—	—	—	—
1,2,4-Trichlorobenzene	mg/kg	20,000	3,200	2,000	920	5.0	—		—	—	—	—	—
2,4,5-Trichlorophenol	mg/kg	200,000	—	200,000	—	270	—		—	—	—	—	—
2,4,6-Trichlorophenol	mg/kg	520	390	11,000	540	*0.66*	—		—	—	—	—	—

Table 2 - Terracon Soil Analytical Results - SVOCs
650 West 83rd Street, Chicago, IL
Project Number:A2157000

Analyte	Units	IEPA Tier 1 Soil Remediation Objectives					Background	Sample Identification	B-6 (1-3)	B-6 (6-8)	B-7 (1-3)	B-7 (4-6)	B-8 (1-3)
		Industrial/Commercial Properties		Construction Workers		Soil Component of the Groundwater Ingestion Route		Sample Depth (feet)	1' - 3'	6' - 8'	1' - 3'	4' - 6'	1' - 3'
		Ingestion	Inhalation	Ingestion	Inhalation	Class I	Chicago	Date Collected	6/25/2013	6/25/2013	6/27/2013	6/27/2013	6/26/2013
Semivolatile Organic Analytical Parameters													
3,3'-Dichlorobenzidine	mg/kg	13	—	280	—	1.3	—		—	—	—	—	—
2,4-Dichlorophenol	mg/kg	6,100	---	610	---	1.0	---		—	--	--	--	—
Diethylphthalate	mg/kg	1,000,000	2,000	1,000,000	2,000	470	—		—	--	—	--	—
Dimethylphthalate	mg/kg	1,000,000	1,300	1,000,000	1,300	380	---		--	--	--	--	--
Di-n-butylphthalate	mg/kg	200,000	2,300	200,000	2,300	2,300	—		—	--	—	--	—
2,4-Dimethylphenol	mg/kg	41,000	—	41,000	—	9.0	—		—	—	—	—	—
4,6-Dinitro-2-methylphenol	mg/kg	200	---	820	---	---	—		--	--	--	--	--
2,4-Dinitrophenol	mg/kg	4,100	—	410	—	3.3	—		—	—	—	—	—
2,4-Dinitrotoluene	mg/kg	8.4	---	180	---	*0.25*	—		--	--	--	--	--
2,6-dinitrotoluene	mg/kg	8.4	—	180	---	*0.26*	---		—	—	—	—	—
Di-n-octylphthalate	mg/kg	41,000	10,000	4,100	10,000	10,000	—		--	--	—	--	--
Hexachlorobenzene	mg/kg	4.00000	1.8	78	2.6	2.0	—		--	--	—	--	—
Hexachlorobutadiene	mg/kg	410	1,000	41	180	2.90000	---		--	--	--	--	--
Hexachlorocyclopentadiene	mg/kg	14,000	16	14,000	1.10000	400	—		—	—	—	—	—
Hexachloroethane	mg/kg	2,000	---	2,000	—	0.5	—		--	--	—	--	--
Isophorone	mg/kg	410,000	4,600	410,000	4,600	8.0	—		—	—	—	—	—
2-Methylnaphthalene	mg/kg	8,200	---	820	---	7.2	—		—	--	--	--	--
2-Methylphenol	mg/kg	100,000	—	100,000	---	15	—		—	—	—	—	—
4-Methylphenol	mg/kg	10,000	---	1,000	---	0.2	—		--	--	—	--	--
2-Nitroaniline	mg/kg	6,100	56	610	3.6	0.14	—		—	—	—	—	—
3-Nitroanaline	mg/kg	610	400	61	26	0.01	—		--	--	--	--	--
4-Nitroaniline	mg/kg	6,100	1,600	610	110	0.1	---		—	—	--	--	—
Nitrobenzene	mg/kg	1,000	140	1,000	9.4	*0.26*	—		--	--	—	--	—
2-Nitrophenol	mg/kg	—	—	—	—	—	—		—	—	—	—	—
4-Nitrophenol	mg/kg	16,000	---	16,000	---	---	---		--	--	--	--	—
N-Nitroso-di-n-propylamine	mg/kg	0.8	—	18	---	0.0018	---		—	—	—	—	—
N-nitrosodiphenylamine	mg/kg	41,000	270	4,100	1.8	1.0	—		--	--	—	--	--
2,2'-oxybis (1-chloropropane)	mg/kg	82,000	1,300	8,200	1,300	2.4	---		—	—	—	—	—
Pentachlorophenol	mg/kg	24	---	520	---	0.03	—		--	--	—	--	—
Phenol	mg/kg	610,000	—	61,000	—	100	—		—	—	—	—	—
1,2,4-Trichlorobenzene	mg/kg	20,000	3,200	2,000	920	5.0	—		--	--	—	--	--
2,4,5-Trichlorophenol	mg/kg	200,000	—	200,000	—	270	—		—	—	—	—	—
2,4,6-Trichlorophenol	mg/kg	520	390	11,000	540	*0.66*	—		--	--	--	--	--

Table 2 - Terracon Soil Analytical Results - SVOCs
650 West 83rd Street, Chicago, IL
Project Number:A2157000

Analyte	Units	IEPA Tier 1 Soil Remediation Objectives					Background	Sample Identification	B-8 (4-6)	B-9 (1-3)	B-9 (4-6)	B-10 (1-3)	B-10 (4-6)
		Industrial/Commercial Properties		Construction Workers		Soil Component of the Groundwater Ingestion Route		Sample Depth (feet)	4' - 6'	1' - 3'	4' - 6'	1' - 3'	4' - 6'
		Ingestion	Inhalation	Ingestion	Inhalation	Class I	Chicago	Date Collected	6/26/2013	6/26/2013	6/26/2013	6/25/2013	6/25/2013
Semivolatile Organic Analytical Parameters													
3,3'-Dichlorobenzidine	mg/kg	13	---	280	---	*1.3*	—		< 0.22	--	--	--	--
2,4-Dichlorophenol	mg/kg	6,100	---	610	—	1.0	---		< 0.22	--	--	--	--
Diethylphthalate	mg/kg	1,000,000	2,000	1,000,000	2,000	470	—		< 0.22	--	--	--	--
Dimethylphthalate	mg/kg	1,000,000	1,300	1,000,000	1,300	380	---		< 0.22	--	--	--	--
Di-n-butylphthalate	mg/kg	200,000	2,300	200,000	2,300	2,300	—		< 0.22	--	--	--	--
2,4-Dimethylphenol	mg/kg	41,000	---	41,000	---	9.0	---		< 0.22	--	--	--	--
4,6-Dinitro-2-methylphenol	mg/kg	200	—	820	---	---	---		< 0.44	--	--	--	--
2,4-Dinitrophenol	mg/kg	4,100	---	410	—	*3.3*	—		< 1.1	--	--	--	--
2,4-Dinitrotoluene	mg/kg	8.4	—	180	---	*0.25*	—		< 0.044	--	--	--	--
2,6-dinitrotoluene	mg/kg	8.4	---	180	—	*0.26*	—		< 0.044	--	--	--	--
Di-n-octylphthalate	mg/kg	41,000	10,000	4,100	10,000	10,000	—		< 0.22	--	--	--	--
Hexachlorobenzene	mg/kg	4.00000	1.8	78	2.6	2.0	—		< 0.22	--	--	--	--
Hexachlorobutadiene	mg/kg	410	1,000	41	180	2.90000	---		< 0.22	--	--	--	--
Hexachlorocyclopentadiene	mg/kg	14,000	16	14,000	1.10000	400	—		< 0.22	--	--	--	--
Hexachloroethane	mg/kg	2,000	---	2,000	---	0.5	—		< 0.22	--	--	--	--
Isophorone	mg/kg	410,000	4,600	410,000	4,600	8.0	—		< 0.22	--	--	--	--
2-Methylnaphthalene	mg/kg	8,200	---	820	---	7.2	—		0.62	--	--	--	--
2-Methylphenol	mg/kg	100,000	---	100,000	---	15	—		< 0.22	--	--	--	--
4-Methylphenol	mg/kg	10,000	—	1,000	---	0.2	---		< 0.22	--	--	--	--
2-Nitroaniline	mg/kg	6,100	56	610	3.6	0.14	—		< 0.22	--	--	--	--
3-Nitroanaline	mg/kg	610	400	61	26	0.01	---		< 0.22	--	--	--	--
4-Nitroaniline	mg/kg	6,100	1,600	610	110	0.1	—		< 0.22	--	--	--	--
Nitrobenzene	mg/kg	1,000	140	1,000	9.4	*0.26*	---		< 0.044	--	--	--	--
2-Nitrophenol	mg/kg	---	—	—	—	---	---		< 0.22	--	--	--	--
4-Nitrophenol	mg/kg	16,000	---	16,000	—	—	—		< 0.44	--	--	--	--
N-Nitroso-di-n-propylamine	mg/kg	0.8	—	18	—	0.0018	---		< 0.044	--	--	--	--
N-nitrosodiphenylamine	mg/kg	41,000	270	4,100	1.8	1.0	—		< 0.044	--	--	--	--
2,2'-oxybis (1-chloropropane)	mg/kg	82,000	1,300	8,200	1,300	2.4	---		< 0.22	--	--	--	--
Pentachlorophenol	mg/kg	24	---	520	---	0.03	—		< 0.088	--	--	--	--
Phenol	mg/kg	610,000	---	61,000	---	100	—		< 0.22	--	--	--	--
1,2,4-Trichlorobenzene	mg/kg	20,000	3,200	2,000	920	5.0	---		< 0.22	--	--	--	--
2,4,5-Trichlorophenol	mg/kg	200,000	---	200,000	---	270	—		< 0.22	--	--	--	--
2,4,6-Trichlorophenol	mg/kg	520	390	11,000	540	*0.66*	---		< 0.22	--	--	--	--

Table 2 - Terracon Soil Analytical Results - SVOCs
650 West 83rd Street, Chicago, IL
Project Number:A2157000

Analyte	Units	IEPA Tier 1 Soil Remediation Objectives					Background	Sample Identification	B-11 (1-3)	B-11 (4-6)	B-12 (1-3)	B-12 (4-6)	B-13 (1-3)
		Industrial/Commercial Properties		Construction Workers		Soil Component of the Groundwater Ingestion Route		Sample Depth (feet)	1' - 3'	4' - 6'	1' - 3'	4' - 6'	1' - 3'
		Ingestion	Inhalation	Ingestion	Inhalation	Class I	Chicago	Date Collected	6/27/2013	6/27/2013	6/28/2013	6/28/2013	6/28/2013
Semivolatile Organic Analytical Parameters													
3,3'-Dichlorobenzidine	mg/kg	13	---	280	---	*1.3*	---		--	< 0.21	--	--	--
2,4-Dichlorophenol	mg/kg	6,100	---	610	---	1.0	---		--	< 0.21	--	--	--
Diethylphthalate	mg/kg	1,000,000	2,000	1,000,000	2,000	470	---		--	< 0.21	--	--	--
Dimethylphthalate	mg/kg	1,000,000	1,300	1,000,000	1,300	380	---		--	< 0.21	--	--	--
Di-n-butylphthalate	mg/kg	200,000	2,300	200,000	2,300	2,300	---		--	< 0.21	--	--	--
2,4-Dimethylphenol	mg/kg	41,000	---	41,000	---	9.0	---		--	< 0.21	--	--	--
4,6-Dinitro-2-methylphenol	mg/kg	200	---	820	---	---	---		--	< 0.4	--	--	--
2,4-Dinitrophenol	mg/kg	4,100	---	410	---	*3.3*	---		--	< 1	--	--	--
2,4-Dinitrotoluene	mg/kg	8.4	---	180	---	*0.25*	---		--	< 0.04	--	--	--
2,6-dinitrotoluene	mg/kg	8.4	---	180	---	*0.26*	---		--	< 0.04	--	--	--
Di-n-octylphthalate	mg/kg	41,000	10,000	4,100	10,000	10,000	---		--	< 0.21	--	--	--
Hexachlorobenzene	mg/kg	4.00000	1.8	78	2.6	2.0	---		--	< 0.21	--	--	--
Hexachlorobutadiene	mg/kg	410	1,000	41	180	2.90000	---		--	< 0.21	--	--	--
Hexachlorocyclopentadiene	mg/kg	14,000	16	14,000	1.10000	400	---		--	< 0.21	--	--	--
Hexachloroethane	mg/kg	2,000	---	2,000	---	0.5	---		--	< 0.21	--	--	--
Isophorone	mg/kg	410,000	4,600	410,000	4,600	8.0	---		--	< 0.21	--	--	--
2-Methylnaphthalene	mg/kg	8,200	---	820	---	7.2	---		--	< 0.21	--	--	--
2-Methylphenol	mg/kg	100,000	---	100,000	---	15	---		--	< 0.21	--	--	--
4-Methylphenol	mg/kg	10,000	---	1,000	---	0.2	---		--	< 0.21	--	--	--
2-Nitroaniline	mg/kg	6,100	56	610	3.6	0.14	---		--	< 0.21	--	--	--
3-Nitroanaline	mg/kg	610	400	61	26	0.01	---		--	< 0.21	--	--	--
4-Nitroaniline	mg/kg	6,100	1,600	610	110	0.1	---		--	< 0.21	--	--	--
Nitrobenzene	mg/kg	1,000	140	1,000	9.4	*0.26*	---		--	< 0.04	--	--	--
2-Nitrophenol	mg/kg	---	---	---	---	---	---		--	< 0.21	--	--	--
4-Nitrophenol	mg/kg	16,000	---	16,000	---	---	---		--	< 0.4	--	--	--
N-Nitroso-di-n-propylamine	mg/kg	0.8	---	18	---	0.0018	---		--	< 0.04	--	--	--
N-nitrosodiphenylamine	mg/kg	41,000	270	4,100	1.8	1.0	---		--	< 0.04	--	--	--
2,2'-oxybis (1-chloropropane)	mg/kg	82,000	1,300	8,200	1,300	2.4	---		--	< 0.21	--	--	--
Pentachlorophenol	mg/kg	24	---	520	---	0.03	---		--	< 0.081	--	--	--
Phenol	mg/kg	610,000	---	61,000	---	100	---		--	< 0.21	--	--	--
1,2,4-Trichlorobenzene	mg/kg	20,000	3,200	2,000	920	5.0	---		--	< 0.21	--	--	--
2,4,5-Trichlorophenol	mg/kg	200,000	---	200,000	---	270	---		--	< 0.21	--	--	--
2,4,6-Trichlorophenol	mg/kg	520	390	11,000	540	*0.66*	---		--	< 0.21	--	--	--

Table 2 - Terracon Soil Analytical Results - SVOCs
650 West 83rd Street, Chicago, IL
Project Number:A2157000

Analyte	Units	IEPA Tier 1 Soil Remediation Objectives					Background	Sample Identification	B-13 (4-6)	B-14 (1-3)	B-14 (6-8)	B-14VD (8-10)	B-15 (1-3)
		Industrial/Commercial Properties		Construction Workers		Soil Component of the Groundwater Ingestion Route		Sample Depth (feet)	4' - 6'	1' - 3'	6' - 8'	8' - 10'	1' - 3'
		Ingestion	Inhalation	Ingestion	Inhalation	Class I	Chicago	Date Collected	6/28/2013	6/27/2013	6/27/2013	9/26/2013	6/27/2013
Semivolatile Organic Analytical Parameters													
3,3'-Dichlorobenzidine	mg/kg	13	---	280	---	*1.3*	---		--	--	--	--	--
2,4-Dichlorophenol	mg/kg	6,100	---	610	---	1.0	---		--	--	--	--	--
Diethylphthalate	mg/kg	1,000,000	2,000	1,000,000	2,000	470	---		--	--	--	--	--
Dimethylphthalate	mg/kg	1,000,000	1,300	1,000,000	1,300	380	---		--	--	--	--	--
Di-n-butylphthalate	mg/kg	200,000	2,300	200,000	2,300	2,300	---		--	--	--	--	--
2,4-Dimethylphenol	mg/kg	41,000	---	41,000	---	9.0	---		--	--	--	--	--
4,6-Dinitro-2-methylphenol	mg/kg	200	---	820	---	---	---		--	--	--	--	--
2,4-Dinitrophenol	mg/kg	4,100	---	410	---	*3.3*	---		--	--	--	--	--
2,4-Dinitrotoluene	mg/kg	8.4	---	180	---	*0.25*	---		--	--	--	--	--
2,6-dinitrotoluene	mg/kg	8.4	---	180	---	*0.26*	---		--	--	--	--	--
Di-n-octylphthalate	mg/kg	41,000	10,000	4,100	10,000	10,000	---		--	--	--	--	--
Hexachlorobenzene	mg/kg	4.00000	1.8	78	2.6	2.0	---		--	--	--	--	--
Hexachlorobutadiene	mg/kg	410	1,000	41	180	2.90000	---		--	--	--	--	--
Hexachlorocyclopentadiene	mg/kg	14,000	16	14,000	1.10000	400	---		--	--	--	--	--
Hexachloroethane	mg/kg	2,000	---	2,000	---	0.5	---		--	--	--	--	--
Isophorone	mg/kg	410,000	4,600	410,000	4,600	8.0	---		--	--	--	--	--
2-Methylnaphthalene	mg/kg	8,200	---	820	---	7.2	---		--	--	--	--	--
2-Methylphenol	mg/kg	100,000	---	100,000	---	15	---		--	--	--	--	--
4-Methylphenol	mg/kg	10,000	---	1,000	---	0.2	---		--	--	--	--	--
2-Nitroaniline	mg/kg	6,100	56	610	3.6	0.14	---		--	--	--	--	--
3-Nitroanaline	mg/kg	610	400	61	26	0.01	---		--	--	--	--	--
4-Nitroaniline	mg/kg	6,100	1,600	610	110	0.1	---		--	--	--	--	--
Nitrobenzene	mg/kg	1,000	140	1,000	9.4	*0.26*	---		--	--	--	--	--
2-Nitrophenol	mg/kg	---	---	---	---	---	---		--	--	--	--	--
4-Nitrophenol	mg/kg	16,000	---	16,000	---	---	---		--	--	--	--	--
N-Nitroso-di-n-propylamine	mg/kg	0.8	---	18	---	0.0018	---		--	--	--	--	--
N-nitrosodiphenylamine	mg/kg	41,000	270	4,100	1.8	1.0	---		--	--	--	--	--
2,2'-oxybis (1-chloropropane)	mg/kg	82,000	1,300	8,200	1,300	2.4	---		--	--	--	--	--
Pentachlorophenol	mg/kg	24	---	520	---	0.03	---		--	--	--	--	--
Phenol	mg/kg	610,000	---	61,000	---	100	---		--	--	--	--	--
1,2,4-Trichlorobenzene	mg/kg	20,000	3,200	2,000	920	5.0	---		--	--	--	--	--
2,4,5-Trichlorophenol	mg/kg	200,000	---	200,000	---	270	---		--	--	--	--	--
2,4,6-Trichlorophenol	mg/kg	520	390	11,000	540	*0.66*	---		--	--	--	--	--

Table 2 - Terracon Soil Analytical Results - SVOCs
650 West 83rd Street, Chicago, IL
Project Number:A2157000

Analyte	Units	IEPA Tier 1 Soil Remediation Objectives					Background	Sample Identification	B-15 (4-6)	B-16 (1-3)	B-16 (4-6)	B-17 (1-3)	B-17 (4-6)
		Industrial/Commercial Properties		Construction Workers		Soil Component of the Groundwater Ingestion Route		Sample Depth (feet)	4' - 6'	1' - 3'	4' - 6'	1' - 3'	4' - 6'
		Ingestion	Inhalation	Ingestion	Inhalation	Class I	Chicago	Date Collected	6/27/2013	6/27/2013	6/27/2013	6/26/2013	6/26/2013
Semivolatile Organic Analytical Parameters													
3,3'-Dichlorobenzidine	mg/kg	13	—	280	—	*1.3*	—		–	< 0.2	< 0.23	–	–
2,4-Dichlorophenol	mg/kg	6,100	—	610	—	1.0	—		–	< 0.2	< 0.23	–	–
Diethylphthalate	mg/kg	1,000,000	2,000	1,000,000	2,000	470	—		–	< 0.2	< 0.23	–	–
Dimethylphthalate	mg/kg	1,000,000	1,300	1,000,000	1,300	380	—		–	< 0.2	< 0.23	–	–
Di-n-butylphthalate	mg/kg	200,000	2,300	200,000	2,300	2,300	—		–	< 0.2	< 0.23	–	–
2,4-Dimethylphenol	mg/kg	41,000	—	41,000	—	9.0	—		–	< 0.2	< 0.23	–	–
4,6-Dinitro-2-methylphenol	mg/kg	200	—	820	—	—	—		–	< 0.38	< 0.44	–	–
2,4-Dinitrophenol	mg/kg	4,100	—	410	—	3.3	—		–	< 0.96	< 1.1	–	–
2,4-Dinitrotoluene	mg/kg	8.4	—	180	—	*0.25*	—		–	< 0.038	< 0.044	–	–
2,6-dinitrotoluene	mg/kg	8.4	—	180	—	*0.26*	—		–	< 0.038	< 0.044	–	–
Di-n-octylphthalate	mg/kg	41,000	10,000	4,100	10,000	10,000	—		–	< 0.2	< 0.23	–	–
Hexachlorobenzene	mg/kg	4.00000	1.8	78	2.6	2.0	—		–	< 0.2	< 0.23	–	–
Hexachlorobutadiene	mg/kg	410	1,000	41	180	2.90000	—		–	< 0.2	< 0.23	–	–
Hexachlorocyclopentadiene	mg/kg	14,000	16	14,000	1.10000	400	—		–	< 0.2	< 0.23	–	–
Hexachloroethane	mg/kg	2,000	—	2,000	—	0.5	—		–	< 0.2	< 0.23	–	–
Isophorone	mg/kg	410,000	4,600	410,000	4,600	8.0	—		–	< 0.2	< 0.23	–	–
2-Methylnaphthalene	mg/kg	8,200	—	820	—	7.2	—		–	< 0.2	< 0.23	–	–
2-Methylphenol	mg/kg	100,000	—	100,000	—	15	—		–	< 0.2	< 0.23	–	–
4-Methylphenol	mg/kg	10,000	—	1,000	—	0.2	—		–	< 0.2	< 0.23	–	–
2-Nitroaniline	mg/kg	6,100	56	610	3.6	0.14	—		–	< 0.2	< 0.23	–	–
3-Nitroanaline	mg/kg	610	400	61	26	0.01	—		–	< 0.2	< 0.23	–	–
4-Nitroaniline	mg/kg	6,100	1,600	610	110	0.1	—		–	< 0.2	< 0.23	–	–
Nitrobenzene	mg/kg	1,000	140	1,000	9.4	*0.26*	—		–	< 0.038	< 0.044	–	–
2-Nitrophenol	mg/kg	—	—	—	—	—	—		–	< 0.2	< 0.23	–	–
4-Nitrophenol	mg/kg	16,000	—	16,000	—	—	—		–	< 0.38	< 0.44	–	–
N-Nitroso-di-n-propylamine	mg/kg	0.8	—	18	—	0.0018	—		–	< 0.038	< 0.044	–	–
N-nitrosodiphenylamine	mg/kg	41,000	270	4,100	1.8	1.0	—		–	< 0.038	< 0.044	–	–
2,2'-oxybis (1-chloropropane)	mg/kg	82,000	1,300	8,200	1,300	2.4	—		–	< 0.2	< 0.23	–	–
Pentachlorophenol	mg/kg	24	—	520	—	0.03	—		–	< 0.077	< 0.09	–	–
Phenol	mg/kg	610,000	—	61,000	—	100	—		–	< 0.2	< 0.23	–	–
1,2,4-Trichlorobenzene	mg/kg	20,000	3,200	2,000	920	5.0	—		–	< 0.2	< 0.23	–	–
2,4,5-Trichlorophenol	mg/kg	200,000	—	200,000	—	270	—		–	< 0.2	< 0.23	–	–
2,4,6-Trichlorophenol	mg/kg	520	390	11,000	540	*0.66*	—		–	< 0.2	< 0.23	–	–

Table 2 - Terracon Soil Analytical Results - SVOCs
650 West 83rd Street, Chicago, IL
Project Number:A2157000

Analyte	Units	IEPA Tier 1 Soil Remediation Objectives					Background	Sample Identification	B-18 (1-3)	B-18 (4-6)	B-19 (1-3)	B-19 (4-6)	B-20 (1-3)
		Industrial/Commercial Properties		Construction Workers		Soil Component of the Groundwater Ingestion Route		Sample Depth (feet)	1' - 3'	4' - 6'	1' - 3'	4' - 6'	1' - 3'
		Ingestion	Inhalation	Ingestion	Inhalation	Class I	Chicago	Date Collected	6/26/2013	6/26/2013	6/26/2013	6/26/2013	6/27/2013
Semivolatile Organic Analytical Parameters													
3,3'-Dichlorobenzidine	mg/kg	13	---	280	---	*1.3*	---		--	--	--	--	< 0.21
2,4-Dichlorophenol	mg/kg	6,100	---	610	---	1.0	---		--	--	--	--	< 0.21
Diethylphthalate	mg/kg	1,000,000	2,000	1,000,000	2,000	470	---		--	--	--	--	< 0.21
Dimethylphthalate	mg/kg	1,000,000	1,300	1,000,000	1,300	380	---		--	--	--	--	< 0.21
Di-n-butylphthalate	mg/kg	200,000	2,300	200,000	2,300	2,300	---		--	--	--	--	< 0.21
2,4-Dimethylphenol	mg/kg	41,000	---	41,000	---	9.0	---		--	--	--	--	< 0.21
4,6-Dinitro-2-methylphenol	mg/kg	200	---	820	---	---	---		--	--	--	--	< 0.41
2,4-Dinitrophenol	mg/kg	4,100	---	410	---	*3.3*	---		--	--	--	--	< 1
2,4-Dinitrotoluene	mg/kg	8.4	---	180	---	*0.25*	---		--	--	--	--	< 0.041
2,6-dinitrotoluene	mg/kg	8.4	---	180	---	*0.26*	---		--	--	--	--	< 0.041
Di-n-octylphthalate	mg/kg	41,000	10,000	4,100	10,000	10,000	---		--	--	--	--	< 0.21
Hexachlorobenzene	mg/kg	4.00000	1.8	78	2.6	2.0	---		--	--	--	--	< 0.21
Hexachlorobutadiene	mg/kg	410	1,000	41	180	2.90000	---		--	--	--	--	< 0.21
Hexachlorocyclopentadiene	mg/kg	14,000	16	14,000	1.10000	400	---		--	--	--	--	< 0.21
Hexachloroethane	mg/kg	2,000	---	2,000	---	0.5	---		--	--	--	--	< 0.21
Isophorone	mg/kg	410,000	4,600	410,000	4,600	8.0	---		--	--	--	--	< 0.21
2-Methylnaphthalene	mg/kg	8,200	---	820	---	7.2	---		--	--	--	--	< 0.21
2-Methylphenol	mg/kg	100,000	---	100,000	---	15	---		--	--	--	--	< 0.21
4-Methylphenol	mg/kg	10,000	---	1,000	---	0.2	---		--	--	--	--	< 0.21
2-Nitroaniline	mg/kg	6,100	56	610	3.6	0.14	---		--	--	--	--	< 0.21
3-Nitroanaline	mg/kg	610	400	61	26	0.01	---		--	--	--	--	< 0.21
4-Nitroaniline	mg/kg	6,100	1,600	610	110	0.1	---		--	--	--	--	< 0.21
Nitrobenzene	mg/kg	1,000	140	1,000	9.4	*0.26*	---		--	--	--	--	< 0.041
2-Nitrophenol	mg/kg	---	---	---	---	---	---		--	--	--	--	< 0.21
4-Nitrophenol	mg/kg	16,000	---	16,000	---	---	---		--	--	--	--	< 0.41
N-Nitroso-di-n-propylamine	mg/kg	0.8	---	18	---	0.0018	---		--	--	--	--	< 0.041
N-nitrosodiphenylamine	mg/kg	41,000	270	4,100	1.8	1.0	---		--	--	--	--	< 0.041
2,2'-oxybis (1-chloropropane)	mg/kg	82,000	1,300	8,200	1,300	2.4	---		--	--	--	--	< 0.21
Pentachlorophenol	mg/kg	24	---	520	---	0.03	---		--	--	--	--	< 0.083
Phenol	mg/kg	610,000	---	61,000	---	100	---		--	--	--	--	< 0.21
1,2,4-Trichlorobenzene	mg/kg	20,000	3,200	2,000	920	5.0	---		--	--	--	--	< 0.21
2,4,5-Trichlorophenol	mg/kg	200,000	---	200,000	---	270	---		--	--	--	--	< 0.21
2,4,6-Trichlorophenol	mg/kg	520	390	11,000	540	*0.66*	---		--	--	--	--	< 0.21

Table 2 - Terracon Soil Analytical Results - SVOCs
650 West 83rd Street, Chicago, IL
Project Number:A2157000

Analyte	Units	IEPA Tier 1 Soil Remediation Objectives					Background	Sample Identification	B-20 (4-6)	B-21 (1-3)	B-21 (4-6)	B-24 (1-3)	B-24 (6-8)
		Industrial/Commercial Properties		Construction Workers		Soil Component of the Groundwater Ingestion Route		Sample Depth (feet)	4' - 6'	1' - 3'	4' - 6'	1' - 3'	6' - 8'
		Ingestion	Inhalation	Ingestion	Inhalation	Class I	Chicago	Date Collected	6/27/2013	6/27/2013	6/27/2013	6/27/2013	6/27/2013
Semivolatile Organic Analytical Parameters													
3,3'-Dichlorobenzidine	mg/kg	13	—	280	—	1.3	—		--	--	--	--	--
2,4-Dichlorophenol	mg/kg	6,100	—	610	—	1.0	—		--	--	--	--	--
Diethylphthalate	mg/kg	1,000,000	2,000	1,000,000	2,000	470	—		--	--	--	--	--
Dimethylphthalate	mg/kg	1,000,000	1,300	1,000,000	1,300	380	—		--	--	--	--	--
Di-n-butylphthalate	mg/kg	200,000	2,300	200,000	2,300	2,300	—		--	--	--	--	--
2,4-Dimethylphenol	mg/kg	41,000	—	41,000	—	9.0	—		--	--	--	--	--
4,6-Dinitro-2-methylphenol	mg/kg	200	—	820	—	—	—		--	--	--	--	--
2,4-Dinitrophenol	mg/kg	4,100	—	410	—	3.3	—		--	--	--	--	--
2,4-Dinitrotoluene	mg/kg	8.4	—	180	—	0.25	—		--	--	--	--	--
2,6-dinitrotoluene	mg/kg	8.4	—	180	—	0.26	—		--	--	--	--	--
Di-n-octylphthalate	mg/kg	41,000	10,000	4,100	10,000	10,000	—		--	--	--	--	--
Hexachlorobenzene	mg/kg	4.00000	1.8	78	2.6	2.0	—		--	--	--	--	--
Hexachlorobutadiene	mg/kg	410	1,000	41	180	2.90000	—		--	--	--	--	--
Hexachlorocyclopentadiene	mg/kg	14,000	16	14,000	1.10000	400	—		--	--	--	--	--
Hexachloroethane	mg/kg	2,000	—	2,000	—	0.5	—		--	--	--	--	--
Isophorone	mg/kg	410,000	4,600	410,000	4,600	8.0	—		--	--	--	--	--
2-Methylnaphthalene	mg/kg	8,200	—	820	—	7.2	—		--	--	--	--	--
2-Methylphenol	mg/kg	100,000	—	100,000	—	15	—		--	--	--	--	--
4-Methylphenol	mg/kg	10,000	—	1,000	—	0.2	—		--	--	--	--	--
2-Nitroaniline	mg/kg	6,100	56	610	3.6	0.14	—		--	--	--	--	--
3-Nitroanaline	mg/kg	610	400	61	26	0.01	—		--	--	--	--	--
4-Nitroaniline	mg/kg	6,100	1,600	610	110	0.1	—		--	--	--	--	--
Nitrobenzene	mg/kg	1,000	140	1,000	9.4	0.26	—		--	--	--	--	--
2-Nitrophenol	mg/kg	—	—	—	—	—	—		--	--	--	--	--
4-Nitrophenol	mg/kg	16,000	—	16,000	—	—	—		--	--	--	--	--
N-Nitroso-di-n-propylamine	mg/kg	0.8	—	18	—	0.0018	—		--	--	--	--	--
N-nitrosodiphenylamine	mg/kg	41,000	270	4,100	1.8	1.0	—		--	--	--	--	--
2,2'-oxybis (1-chloropropane)	mg/kg	82,000	1,300	8,200	1,300	2.4	—		--	--	--	--	--
Pentachlorophenol	mg/kg	24	—	520	—	0.03	—		--	--	--	--	--
Phenol	mg/kg	610,000	—	61,000	—	100	—		--	--	--	--	--
1,2,4-Trichlorobenzene	mg/kg	20,000	3,200	2,000	920	5.0	—		--	--	--	--	--
2,4,5-Trichlorophenol	mg/kg	200,000	—	200,000	—	270	—		--	--	--	--	--
2,4,6-Trichlorophenol	mg/kg	520	390	11,000	540	0.66	—		--	--	--	--	--

Table 2 - Terracon Soil Analytical Results - SVOCs
650 West 83rd Street, Chicago, IL
Project Number:A2157000

Analyte	Units	IEPA Tier 1 Soil Remediation Objectives					Background	Sample Identification	B-25 (1-3)	B-25 (4-6)	B-26 (1-3)	B-26 (6-8)	B-27 (1-3)
		Industrial/Commercial Properties		Construction Workers		Soil Component of the Groundwater Ingestion Route		Sample Depth (feet)	1' - 3'	4' - 6'	1' - 3'	6' - 8'	1' - 3'
		Ingestion	Inhalation	Ingestion	Inhalation	Class I	Chicago	Date Collected	6/26/2013	6/26/2013	6/26/2013	6/26/2013	6/26/2013
Semivolatile Organic Analytical Parameters													
3,3'-Dichlorobenzidine	mg/kg	13	---	280	---	*1.3*	---		--	--	--	--	--
2,4-Dichlorophenol	mg/kg	6,100	---	610	---	1.0	---		--	--	--	--	--
Diethylphthalate	mg/kg	1,000,000	2,000	1,000,000	2,000	470	---		--	--	--	--	--
Dimethylphthalate	mg/kg	1,000,000	1,300	1,000,000	1,300	380	---		--	--	--	--	--
Di-n-butylphthalate	mg/kg	200,000	2,300	200,000	2,300	2,300	---		--	--	--	--	--
2,4-Dimethylphenol	mg/kg	41,000	---	41,000	---	9.0	---		--	--	--	--	--
4,6-Dinitro-2-methylphenol	mg/kg	200	---	820	---	---	---		--	--	--	--	--
2,4-Dinitrophenol	mg/kg	4,100	---	410	---	*3.3*	---		--	--	--	--	--
2,4-Dinitrotoluene	mg/kg	8.4	---	180	---	*0.25*	---		--	--	--	--	--
2,6-dinitrotoluene	mg/kg	8.4	---	180	---	*0.26*	---		--	--	--	--	--
Di-n-octylphthalate	mg/kg	41,000	10,000	4,100	10,000	10,000	---		--	--	--	--	--
Hexachlorobenzene	mg/kg	4.00000	1.8	78	2.6	2.0	---		--	--	--	--	--
Hexachlorobutadiene	mg/kg	410	1,000	41	180	2.90000	---		--	--	--	--	--
Hexachlorocyclopentadiene	mg/kg	14,000	16	14,000	1.10000	400	---		--	--	--	--	--
Hexachloroethane	mg/kg	2,000	---	2,000	---	0.5	---		--	--	--	--	--
Isophorone	mg/kg	410,000	4,600	410,000	4,600	8.0	---		--	--	--	--	--
2-Methylnaphthalene	mg/kg	8,200	---	820	---	7.2	---		--	--	--	--	--
2-Methylphenol	mg/kg	100,000	---	100,000	---	15	---		--	--	--	--	--
4-Methylphenol	mg/kg	10,000	---	1,000	---	0.2	---		--	--	--	--	--
2-Nitroaniline	mg/kg	6,100	56	610	3.6	0.14	---		--	--	--	--	--
3-Nitroanaline	mg/kg	610	400	61	26	0.01	---		--	--	--	--	--
4-Nitroaniline	mg/kg	6,100	1,600	610	110	0.1	---		--	--	--	--	--
Nitrobenzene	mg/kg	1,000	140	1,000	9.4	*0.26*	---		--	--	--	--	--
2-Nitrophenol	mg/kg	---	---	---	---	---	---		--	--	--	--	--
4-Nitrophenol	mg/kg	16,000	---	16,000	---	---	---		--	--	--	--	--
N-Nitroso-di-n-propylamine	mg/kg	0.8	---	18	---	0.0018	---		--	--	--	--	--
N-nitrosodiphenylamine	mg/kg	41,000	270	4,100	1.8	1.0	---		--	--	--	--	--
2,2'-oxybis (1-chloropropane)	mg/kg	82,000	1,300	8,200	1,300	2.4	---		--	--	--	--	--
Pentachlorophenol	mg/kg	24	---	520	---	0.03	---		--	--	--	--	--
Phenol	mg/kg	610,000	---	61,000	---	100	---		--	--	--	--	--
1,2,4-Trichlorobenzene	mg/kg	20,000	3,200	2,000	920	5.0	---		--	--	--	--	--
2,4,5-Trichlorophenol	mg/kg	200,000	---	200,000	---	270	---		--	--	--	--	--
2,4,6-Trichlorophenol	mg/kg	520	390	11,000	540	*0.66*	---		--	--	--	--	--

Table 2 - Terracon Soil Analytical Results - SVOCs
650 West 83rd Street, Chicago, IL
Project Number:A2157000

Analyte	Units	IEPA Tier 1 Soil Remediation Objectives					Background	Sample Identification	B-27 (6-8)	B-28 (1-3)	B-28 (4-6)	B-29 (1-3)	B-29 (4-6)
		Industrial/Commercial Properties		Construction Workers		Soil Component of the Groundwater Ingestion Route		Sample Depth (feet)	6' - 8'	1' - 3'	4' - 6'	1' - 3'	4' - 6'
		Ingestion	Inhalation	Ingestion	Inhalation	Class I	Chicago	Date Collected	6/26/2013	6/28/2013	6/28/2013	6/28/2013	6/28/2013
Semivolatile Organic Analytical Parameters													
3,3'-Dichlorobenzidine	mg/kg	13	---	280	---	*1.3*	---		--	--	--	--	--
2,4-Dichlorophenol	mg/kg	6,100	---	610	---	1.0	---		--	--	--	--	--
Diethylphthalate	mg/kg	1,000,000	2,000	1,000,000	2,000	470	---		--	--	--	--	--
Dimethylphthalate	mg/kg	1,000,000	1,300	1,000,000	1,300	380	---		--	--	--	--	--
Di-n-butylphthalate	mg/kg	200,000	2,300	200,000	2,300	2,300	---		--	--	--	--	--
2,4-Dimethylphenol	mg/kg	41,000	---	41,000	---	9.0	---		--	--	--	--	--
4,6-Dinitro-2-methylphenol	mg/kg	200	---	820	---	---	---		--	--	--	--	--
2,4-Dinitrophenol	mg/kg	4,100	---	410	---	*3.3*	---		--	--	--	--	--
2,4-Dinitrotoluene	mg/kg	8.4	---	180	---	*0.25*	---		--	--	--	--	--
2,6-dinitrotoluene	mg/kg	8.4	---	180	---	*0.26*	---		--	--	--	--	--
Di-n-octylphthalate	mg/kg	41,000	10,000	4,100	10,000	10,000	---		--	--	--	--	--
Hexachlorobenzene	mg/kg	4.00000	1.8	78	2.6	2.0	---		--	--	--	--	--
Hexachlorobutadiene	mg/kg	410	1,000	41	180	2.90000	---		--	--	--	--	--
Hexachlorocyclopentadiene	mg/kg	14,000	16	14,000	1.10000	400	---		--	--	--	--	--
Hexachloroethane	mg/kg	2,000	---	2,000	---	0.5	---		--	--	--	--	--
Isophorone	mg/kg	410,000	4,600	410,000	4,600	8.0	---		--	--	--	--	--
2-Methylnaphthalene	mg/kg	8,200	---	820	---	7.2	---		--	--	--	--	--
2-Methylphenol	mg/kg	100,000	---	100,000	---	15	---		--	--	--	--	--
4-Methylphenol	mg/kg	10,000	---	1,000	---	0.2	---		--	--	--	--	--
2-Nitroaniline	mg/kg	6,100	56	610	3.6	0.14	---		--	--	--	--	--
3-Nitroanaline	mg/kg	610	400	61	26	0.01	---		--	--	--	--	--
4-Nitroaniline	mg/kg	6,100	1,600	610	110	0.1	---		--	--	--	--	--
Nitrobenzene	mg/kg	1,000	140	1,000	9.4	*0.26*	---		--	--	--	--	--
2-Nitrophenol	mg/kg	---	---	---	---	---	---		--	--	--	--	--
4-Nitrophenol	mg/kg	16,000	---	16,000	---	---	---		--	--	--	--	--
N-Nitroso-di-n-propylamine	mg/kg	0.8	---	18	---	0.0018	---		--	--	--	--	--
N-nitrosodiphenylamine	mg/kg	41,000	270	4,100	1.8	1.0	---		--	--	--	--	--
2,2'-oxybis (1-chloropropane)	mg/kg	82,000	1,300	8,200	1,300	2.4	---		--	--	--	--	--
Pentachlorophenol	mg/kg	24	---	520	---	0.03	---		--	--	--	--	--
Phenol	mg/kg	610,000	---	61,000	---	100	---		--	--	--	--	--
1,2,4-Trichlorobenzene	mg/kg	20,000	3,200	2,000	920	5.0	---		--	--	--	--	--
2,4,5-Trichlorophenol	mg/kg	200,000	---	200,000	---	270	---		--	--	--	--	--
2,4,6-Trichlorophenol	mg/kg	520	390	11,000	540	*0.66*	---		--	--	--	--	--

Table 2 - Terracon Soil Analytical Results - SVOCs
650 West 83rd Street, Chicago, IL
Project Number:A2157000

Analyte	Units	IEPA Tier 1 Soil Remediation Objectives					Background	Sample Identification	B-30 (1-3)	B-30 (4-6)	B-31 (1-3)	B-31 (6-8)	B-32 (1-3)
		Industrial/Commercial Properties		Construction Workers		Soil Component of the Groundwater Ingestion Route		Sample Depth (feet)	1' - 3'	4' - 6'	1' - 3'	6' - 8'	1' - 3'
		Ingestion	Inhalation	Ingestion	Inhalation	Class I	Chicago	Date Collected	6/28/2013	6/28/2013	6/27/2013	6/27/2013	6/26/2013
Semivolatile Organic Analytical Parameters													
3,3'-Dichlorobenzidine	mg/kg	13	—	280	—	*1.3*	—		—	—	—	—	—
2,4-Dichlorophenol	mg/kg	6,100	—	610	—	1.0	—		—	—	—	—	—
Diethylphthalate	mg/kg	1,000,000	2,000	1,000,000	2,000	470	—		—	—	—	—	—
Dimethylphthalate	mg/kg	1,000,000	1,300	1,000,000	1,300	380	—		—	—	—	—	—
Di-n-butylphthalate	mg/kg	200,000	2,300	200,000	2,300	2,300	—		—	—	—	—	—
2,4-Dimethylphenol	mg/kg	41,000	—	41,000	—	9.0	—		—	—	—	—	—
4,6-Dinitro-2-methylphenol	mg/kg	200	—	820	—	—	—		—	—	—	—	—
2,4-Dinitrophenol	mg/kg	4,100	—	410	—	*3.3*	—		—	—	—	—	—
2,4-Dinitrotoluene	mg/kg	8.4	—	180	—	*0.25*	—		—	—	—	—	—
2,6-dinitrotoluene	mg/kg	8.4	—	180	—	*0.26*	—		—	—	—	—	—
Di-n-octylphthalate	mg/kg	41,000	10,000	4,100	10,000	10,000	—		—	—	—	—	—
Hexachlorobenzene	mg/kg	4.00000	1.8	78	2.6	2.0	—		—	—	—	—	—
Hexachlorobutadiene	mg/kg	410	1,000	41	180	2.90000	—		—	—	—	—	—
Hexachlorocyclopentadiene	mg/kg	14,000	16	14,000	1.10000	400	—		—	—	—	—	—
Hexachloroethane	mg/kg	2,000	—	2,000	—	0.5	—		—	—	—	—	—
Isophorone	mg/kg	410,000	4,600	410,000	4,600	8.0	—		—	—	—	—	—
2-Methylnaphthalene	mg/kg	8,200	—	820	—	7.2	—		—	—	—	—	—
2-Methylphenol	mg/kg	100,000	—	100,000	—	15	—		—	—	—	—	—
4-Methylphenol	mg/kg	10,000	—	1,000	—	0.2	—		—	—	—	—	—
2-Nitroaniline	mg/kg	6,100	56	610	3.6	0.14	—		—	—	—	—	—
3-Nitroanaline	mg/kg	610	400	61	26	0.01	—		—	—	—	—	—
4-Nitroaniline	mg/kg	6,100	1,600	610	110	0.1	—		—	—	—	—	—
Nitrobenzene	mg/kg	1,000	140	1,000	9.4	*0.26*	—		—	—	—	—	—
2-Nitrophenol	mg/kg	—	—	—	—	—	—		—	—	—	—	—
4-Nitrophenol	mg/kg	16,000	—	16,000	—	—	—		—	—	—	—	—
N-Nitroso-di-n-propylamine	mg/kg	0.8	—	18	—	0.0018	—		—	—	—	—	—
N-nitrosodiphenylamine	mg/kg	41,000	270	4,100	1.8	1.0	—		—	—	—	—	—
2,2'-oxybis (1-chloropropane)	mg/kg	82,000	1,300	8,200	1,300	2.4	—		—	—	—	—	—
Pentachlorophenol	mg/kg	24	—	520	—	0.03	—		—	—	—	—	—
Phenol	mg/kg	610,000	—	61,000	—	100	—		—	—	—	—	—
1,2,4-Trichlorobenzene	mg/kg	20,000	3,200	2,000	920	5.0	—		—	—	—	—	—
2,4,5-Trichlorophenol	mg/kg	200,000	—	200,000	—	270	—		—	—	—	—	—
2,4,6-Trichlorophenol	mg/kg	520	390	11,000	540	*0.66*	—		—	—	—	—	—

Table 2 - Terracon Soil Analytical Results - SVOCs
650 West 83rd Street, Chicago, IL
Project Number:A2157000

Analyte	Units	IEPA Tier 1 Soil Remediation Objectives					Background	Sample Identification	B-32 (6-8)	B-33 (1-3)	B-33 (4-6)	B-34 (1-3)	B-34 (4-6)
		Industrial/Commercial Properties		Construction Workers		Soil Component of the Groundwater Ingestion Route		Sample Depth (feet)	6' - 8'	1' - 3'	4' - 6'	1' - 3'	4' - 6'
		Ingestion	Inhalation	Ingestion	Inhalation	Class I	Chicago	Date Collected	6/26/2013	6/26/2013	6/26/2013	6/25/2013	6/25/2013
Semivolatile Organic Analytical Parameters													
3,3'-Dichlorobenzidine	mg/kg	13	---	280	---	*1.3*	---		---	---	---	< 0.2	---
2,4-Dichlorophenol	mg/kg	6,100	---	610	---	1.0	---		---	---	---	< 0.2	---
Diethylphthalate	mg/kg	1,000,000	2,000	1,000,000	2,000	470	---		---	---	---	< 0.2	---
Dimethylphthalate	mg/kg	1,000,000	1,300	1,000,000	1,300	380	---		---	---	---	< 0.2	---
Di-n-butylphthalate	mg/kg	200,000	2,300	200,000	2,300	2,300	---		---	---	---	< 0.2	---
2,4-Dimethylphenol	mg/kg	41,000	---	41,000	---	9.0	---		---	---	---	< 0.2	---
4,6-Dinitro-2-methylphenol	mg/kg	200	---	820	---	---	---		---	---	---	< 0.4	---
2,4-Dinitrophenol	mg/kg	4,100	---	410	---	*3.3*	---		---	---	---	< 1	---
2,4-Dinitrotoluene	mg/kg	8.4	---	180	---	*0.25*	---		---	---	---	< 0.04	---
2,6-dinitrotoluene	mg/kg	8.4	---	180	---	*0.26*	---		---	---	---	< 0.04	---
Di-n-octylphthalate	mg/kg	41,000	10,000	4,100	10,000	10,000	---		---	---	---	< 0.2	---
Hexachlorobenzene	mg/kg	4.00000	1.8	78	2.6	2.0	---		---	---	---	< 0.2	---
Hexachlorobutadiene	mg/kg	410	1,000	41	180	2.90000	---		---	---	---	< 0.2	---
Hexachlorocyclopentadiene	mg/kg	14,000	16	14,000	1.10000	400	---		---	---	---	< 0.2	---
Hexachloroethane	mg/kg	2,000	---	2,000	---	0.5	---		---	---	---	< 0.2	---
Isophorone	mg/kg	410,000	4,600	410,000	4,600	8.0	---		---	---	---	< 0.2	---
2-Methylnaphthalene	mg/kg	8,200	---	820	---	7.2	---		---	---	---	< 0.2	---
2-Methylphenol	mg/kg	100,000	---	100,000	---	15	---		---	---	---	< 0.2	---
4-Methylphenol	mg/kg	10,000	---	1,000	---	0.2	---		---	---	---	< 0.2	---
2-Nitroaniline	mg/kg	6,100	56	610	3.6	0.14	---		---	---	---	< 0.2	---
3-Nitroanaline	mg/kg	610	400	61	26	0.01	---		---	---	---	< 0.2	---
4-Nitroaniline	mg/kg	6,100	1,600	610	110	0.1	---		---	---	---	< 0.2	---
Nitrobenzene	mg/kg	1,000	140	1,000	9.4	*0.26*	---		---	---	---	< 0.04	---
2-Nitrophenol	mg/kg	---	---	---	---	---	---		---	---	---	< 0.2	---
4-Nitrophenol	mg/kg	16,000	---	16,000	---	---	---		---	---	---	< 0.4	---
N-Nitroso-di-n-propylamine	mg/kg	0.8	---	18	---	0.0018	---		---	---	---	< 0.04	---
N-nitrosodiphenylamine	mg/kg	41,000	270	4,100	1.8	1.0	---		---	---	---	< 0.04	---
2,2'-oxybis (1-chloropropane)	mg/kg	82,000	1,300	8,200	1,300	2.4	---		---	---	---	< 0.2	---
Pentachlorophenol	mg/kg	24	---	520	---	0.03	---		---	---	---	< 0.08	---
Phenol	mg/kg	610,000	---	61,000	---	100	---		---	---	---	< 0.2	---
1,2,4-Trichlorobenzene	mg/kg	20,000	3,200	2,000	920	5.0	---		---	---	---	< 0.2	---
2,4,5-Trichlorophenol	mg/kg	200,000	---	200,000	---	270	---		---	---	---	< 0.2	---
2,4,6-Trichlorophenol	mg/kg	520	390	11,000	540	*0.66*	---		---	---	---	< 0.2	---

Table 2 - Terracon Soil Analytical Results - SVOCs
650 West 83rd Street, Chicago, IL
Project Number:A2157000

Analyte	Units	IEPA Tier 1 Soil Remediation Objectives					Background	Sample Identification	B-35 (1-3)	B-35 (4-6)	B-36 (1-3)	B-36 (4-6)	B-37 (1-3)
		Industrial/Commercial Properties		Construction Workers		Soil Component of the Groundwater Ingestion Route		Sample Depth (feet)	1' - 3'	4' - 6'	1' - 3'	4' - 6'	1' - 3'
		Ingestion	Inhalation	Ingestion	Inhalation	Class I	Chicago	Date Collected	6/26/2013	6/26/2013	6/26/2013	6/26/2013	6/27/2013
Semivolatile Organic Analytical Parameters													
3,3'-Dichlorobenzidine	mg/kg	13	—	280	---	*1.3*	—		--	--	--	--	--
2,4-Dichlorophenol	mg/kg	6,100	---	610	—	1.0	—		--	--	--	--	--
Diethylphthalate	mg/kg	1,000,000	2,000	1,000,000	2,000	470	---		--	--	--	--	--
Dimethylphthalate	mg/kg	1,000,000	1,300	1,000,000	1,300	380	—		--	--	--	--	--
Di-n-butylphthalate	mg/kg	200,000	2,300	200,000	2,300	2,300	—		--	--	--	--	--
2,4-Dimethylphenol	mg/kg	41,000	---	41,000	---	9.0	—		--	--	--	--	--
4,6-Dinitro-2-methylphenol	mg/kg	200	—	820	---	---	---		--	--	--	--	--
2,4-Dinitrophenol	mg/kg	4,100	---	410	---	*3.3*	—		--	--	--	--	--
2,4-Dinitrotoluene	mg/kg	8.4	—	180	---	*0.25*	---		--	--	--	--	--
2,6-dinitrotoluene	mg/kg	8.4	---	180	---	*0.26*	—		--	--	--	--	--
Di-n-octylphthalate	mg/kg	41,000	10,000	4,100	10,000	10,000	---		--	--	--	--	--
Hexachlorobenzene	mg/kg	4.00000	1.8	78	2.6	2.0	—		--	--	--	--	--
Hexachlorobutadiene	mg/kg	410	1,000	41	180	2.90000	---		--	--	--	--	--
Hexachlorocyclopentadiene	mg/kg	14,000	16	14,000	1.10000	400	—		--	--	--	--	--
Hexachloroethane	mg/kg	2,000	—	2,000	—	0.5	---		--	--	--	--	--
Isophorone	mg/kg	410,000	4,600	410,000	4,600	8.0	—		--	--	--	--	--
2-Methylnaphthalene	mg/kg	8,200	—	820	—	7.2	---		--	--	--	--	--
2-Methylphenol	mg/kg	100,000	—	100,000	---	15	---		--	--	--	--	--
4-Methylphenol	mg/kg	10,000	---	1,000	---	0.2	—		--	--	--	--	--
2-Nitroaniline	mg/kg	6,100	56	610	3.6	0.14	---		--	--	--	--	--
3-Nitroanaline	mg/kg	610	400	61	26	0.01	---		--	--	--	--	--
4-Nitroaniline	mg/kg	6,100	1,600	610	110	0.1	—		--	--	--	--	--
Nitrobenzene	mg/kg	1,000	140	1,000	9.4	*0.26*	---		--	--	--	--	--
2-Nitrophenol	mg/kg	—	—	—	---	—	---		--	--	--	--	--
4-Nitrophenol	mg/kg	16,000	---	16,000	---	—	—		--	--	--	--	--
N-Nitroso-di-n-propylamine	mg/kg	0.8	—	18	---	0.0018	---		--	--	--	--	--
N-nitrosodiphenylamine	mg/kg	41,000	270	4,100	1.8	1.0	—		--	--	--	--	--
2,2'-oxybis (1-chloropropane)	mg/kg	82,000	1,300	8,200	1,300	2.4	---		--	--	--	--	--
Pentachlorophenol	mg/kg	24	---	520	---	0.03	—		--	--	--	--	--
Phenol	mg/kg	610,000	---	61,000	---	100	—		--	--	--	--	--
1,2,4-Trichlorobenzene	mg/kg	20,000	3,200	2,000	920	5.0	---		--	--	--	--	--
2,4,5-Trichlorophenol	mg/kg	200,000	---	200,000	---	270	—		--	--	--	--	--
2,4,6-Trichlorophenol	mg/kg	520	390	11,000	540	*0.66*	---		--	--	--	--	--

Table 2 - Terracon Soil Analytical Results - SVOCs
650 West 83rd Street, Chicago, IL
Project Number:A2157000

Analyte	Units	IEPA Tier 1 Soil Remediation Objectives					Background	Sample Identification	B-37 (6-8)	B-101 (6-8)	B-103 (6-8)	B-104 (6-8)	B-105 (6-8)
		Industrial/Commercial Properties		Construction Workers		Soil Component of the Groundwater Ingestion Route		Sample Depth (feet)	6' - 8'	6' - 8'	6' - 8'	6' - 8'	6' - 8'
		Ingestion	Inhalation	Ingestion	Inhalation	Class I	Chicago	Date Collected	6/27/2013	9/27/2013	9/27/2013	9/27/2013	9/27/2013
Semivolatile Organic Analytical Parameters													
3,3'-Dichlorobenzidine	mg/kg	13	---	280	---	*1.3*	---		--	--	--	--	--
2,4-Dichlorophenol	mg/kg	6,100	---	610	---	1.0	---		--	--	--	--	--
Diethylphthalate	mg/kg	1,000,000	2,000	1,000,000	2,000	470	---		--	--	--	--	--
Dimethylphthalate	mg/kg	1,000,000	1,300	1,000,000	1,300	380	---		--	--	--	--	--
Di-n-butylphthalate	mg/kg	200,000	2,300	200,000	2,300	2,300	---		--	--	--	--	--
2,4-Dimethylphenol	mg/kg	41,000	---	41,000	---	9.0	---		--	--	--	--	--
4,6-Dinitro-2-methylphenol	mg/kg	200	---	820	---	---	---		--	--	--	--	--
2,4-Dinitrophenol	mg/kg	4,100	---	410	---	3.3	---		--	--	--	--	--
2,4-Dinitrotoluene	mg/kg	8.4	---	180	---	*0.25*	---		--	--	--	--	--
2,6-dinitrotoluene	mg/kg	8.4	---	180	---	*0.26*	---		--	--	--	--	--
Di-n-octylphthalate	mg/kg	41,000	10,000	4,100	10,000	10,000	---		--	--	--	--	--
Hexachlorobenzene	mg/kg	4.00000	1.8	78	2.6	2.0	---		--	--	--	--	--
Hexachlorobutadiene	mg/kg	410	1,000	41	180	2.90000	---		--	--	--	--	--
Hexachlorocyclopentadiene	mg/kg	14,000	16	14,000	1.10000	400	---		--	--	--	--	--
Hexachloroethane	mg/kg	2,000	---	2,000	---	0.5	---		--	--	--	--	--
Isophorone	mg/kg	410,000	4,600	410,000	4,600	8.0	---		--	--	--	--	--
2-Methylnaphthalene	mg/kg	8,200	---	820	---	7.2	---		--	--	--	--	--
2-Methylphenol	mg/kg	100,000	---	100,000	---	15	---		--	--	--	--	--
4-Methylphenol	mg/kg	10,000	---	1,000	---	0.2	---		--	--	--	--	--
2-Nitroaniline	mg/kg	6,100	56	610	3.6	0.14	---		--	--	--	--	--
3-Nitroanaline	mg/kg	610	400	61	26	0.01	---		--	--	--	--	--
4-Nitroaniline	mg/kg	6,100	1,600	610	110	0.1	---		--	--	--	--	--
Nitrobenzene	mg/kg	1,000	140	1,000	9.4	*0.26*	---		--	--	--	--	--
2-Nitrophenol	mg/kg	---	---	---	---	---	---		--	--	--	--	--
4-Nitrophenol	mg/kg	16,000	---	16,000	---	---	---		--	--	--	--	--
N-Nitroso-di-n-propylamine	mg/kg	0.8	---	18	---	0.0018	---		--	--	--	--	--
N-nitrosodiphenylamine	mg/kg	41,000	270	4,100	1.8	1.0	---		--	--	--	--	--
2,2'-oxybis (1-chloropropane)	mg/kg	82,000	1,300	8,200	1,300	2.4	---		--	--	--	--	--
Pentachlorophenol	mg/kg	24	---	520	---	0.03	---		--	--	--	--	--
Phenol	mg/kg	610,000	---	61,000	---	100	---		--	--	--	--	--
1,2,4-Trichlorobenzene	mg/kg	20,000	3,200	2,000	920	5.0	---		--	--	--	--	--
2,4,5-Trichlorophenol	mg/kg	200,000	---	200,000	---	270	---		--	--	--	--	--
2,4,6-Trichlorophenol	mg/kg	520	390	11,000	540	*0.66*	---		--	--	--	--	--

Table 2 - Terracon Soil Analytical Results - SVOCs
650 West 83rd Street, Chicago, IL
Project Number:A2157000

Analyte	Units	IEPA Tier 1 Soil Remediation Objectives					Background	Sample Identification	B-107 (6-8)	B-122 (1-3)	B-123 (1-3)	B-124 (1-3)	B-124 (4-6)
		Industrial/Commercial Properties		Construction Workers		Soil Component of the Groundwater Ingestion Route		Sample Depth (feet)	6' - 8'	1' - 3'	1' - 3'	1' - 3'	4' - 6'
		Ingestion	Inhalation	Ingestion	Inhalation	Class I	Chicago	Date Collected	9/27/2013	9/26/2013	9/26/2013	9/27/2013	9/27/2013
Semivolatile Organic Analytical Parameters													
3,3'-Dichlorobenzidine	mg/kg	13	---	280	---	*1.3*	---		--	--	--	--	--
2,4-Dichlorophenol	mg/kg	6,100	---	610	---	1.0	---		--	--	--	--	--
Diethylphthalate	mg/kg	1,000,000	2,000	1,000,000	2,000	470	---		--	--	--	--	--
Dimethylphthalate	mg/kg	1,000,000	1,300	1,000,000	1,300	380	---		--	--	--	--	--
Di-n-butylphthalate	mg/kg	200,000	2,300	200,000	2,300	2,300	---		--	--	--	--	--
2,4-Dimethylphenol	mg/kg	41,000	---	41,000	---	9.0	---		--	--	--	--	--
4,6-Dinitro-2-methylphenol	mg/kg	200	---	820	---	---	---		--	--	--	--	--
2,4-Dinitrophenol	mg/kg	4,100	---	410	---	*3.3*	---		--	--	--	--	--
2,4-Dinitrotoluene	mg/kg	8.4	---	180	---	*0.25*	---		--	--	--	--	--
2,6-dinitrotoluene	mg/kg	8.4	---	180	---	*0.26*	---		--	--	--	--	--
Di-n-octylphthalate	mg/kg	41,000	10,000	4,100	10,000	10,000	---		--	--	--	--	--
Hexachlorobenzene	mg/kg	4.00000	1.8	78	2.6	2.0	---		--	--	--	--	--
Hexachlorobutadiene	mg/kg	410	1,000	41	180	2.90000	---		--	--	--	--	--
Hexachlorocyclopentadiene	mg/kg	14,000	16	14,000	1.10000	400	---		--	--	--	--	--
Hexachloroethane	mg/kg	2,000	---	2,000	---	0.5	---		--	--	--	--	--
Isophorone	mg/kg	410,000	4,600	410,000	4,600	8.0	---		--	--	--	--	--
2-Methylnaphthalene	mg/kg	8,200	---	820	---	7.2	---		--	--	--	--	--
2-Methylphenol	mg/kg	100,000	---	100,000	---	15	---		--	--	--	--	--
4-Methylphenol	mg/kg	10,000	---	1,000	---	0.2	---		--	--	--	--	--
2-Nitroaniline	mg/kg	6,100	56	610	3.6	0.14	---		--	--	--	--	--
3-Nitroanaline	mg/kg	610	400	61	26	0.01	---		--	--	--	--	--
4-Nitroaniline	mg/kg	6,100	1,600	610	110	0.1	---		--	--	--	--	--
Nitrobenzene	mg/kg	1,000	140	1,000	9.4	*0.26*	---		--	--	--	--	--
2-Nitrophenol	mg/kg	---	---	---	---	---	---		--	--	--	--	--
4-Nitrophenol	mg/kg	16,000	---	16,000	---	---	---		--	--	--	--	--
N-Nitroso-di-n-propylamine	mg/kg	0.8	---	18	---	0.0018	---		--	--	--	--	--
N-nitrosodiphenylamine	mg/kg	41,000	270	4,100	1.8	1.0	---		--	--	--	--	--
2,2'-oxybis (1-chloropropane)	mg/kg	82,000	1,300	8,200	1,300	2.4	---		--	--	--	--	--
Pentachlorophenol	mg/kg	24	---	520	---	0.03	---		--	--	--	--	--
Phenol	mg/kg	610,000	---	61,000	---	100	---		--	--	--	--	--
1,2,4-Trichlorobenzene	mg/kg	20,000	3,200	2,000	920	5.0	---		--	--	--	--	--
2,4,5-Trichlorophenol	mg/kg	200,000	---	200,000	---	270	---		--	--	--	--	--
2,4,6-Trichlorophenol	mg/kg	520	390	11,000	540	*0.66*	---		--	--	--	--	--

Table 2 - Terracon Soil Analytical Results - SVOCs
650 West 83rd Street, Chicago, IL
Project Number:A2157000

Analyte	Units	IEPA Tier 1 Soil Remediation Objectives					Background	Sample Identification	B-125 (1-3)	B-125 (4-6)	B-126 (1-3)	B-126 (4-6)	B-127 (1-3)
		Industrial/Commercial Properties		Construction Workers		Soil Component of the Groundwater Ingestion Route		Sample Depth (feet)	1' - 3'	4' - 6'	1' - 3'	4' - 6'	1' - 3'
		Ingestion	Inhalation	Ingestion	Inhalation	Class I	Chicago	Date Collected	9/27/2013	9/27/2013	9/27/2013	9/27/2013	9/27/2013
Semivolatile Organic Analytical Parameters													
3,3'-Dichlorobenzidine	mg/kg	13	—	280	—	1.3	—		—	—	—	—	—
2,4-Dichlorophenol	mg/kg	6,100	—	610	—	1.0	—		—	—	—	—	—
Diethylphthalate	mg/kg	1,000,000	2,000	1,000,000	2,000	470	—		—	—	—	—	—
Dimethylphthalate	mg/kg	1,000,000	1,300	1,000,000	1,300	380	—		—	—	—	—	—
Di-n-butylphthalate	mg/kg	200,000	2,300	200,000	2,300	2,300	—		—	—	—	—	—
2,4-Dimethylphenol	mg/kg	41,000	—	41,000	—	9.0	—		—	—	—	—	—
4,6-Dinitro-2-methylphenol	mg/kg	200	—	820	—	—	—		—	—	—	—	—
2,4-Dinitrophenol	mg/kg	4,100	—	410	—	3.3	—		—	—	—	—	—
2,4-Dinitrotoluene	mg/kg	8.4	—	180	—	0.25	—		—	—	—	—	—
2,6-dinitrotoluene	mg/kg	8.4	—	180	—	0.26	—		—	—	—	—	—
Di-n-octylphthalate	mg/kg	41,000	10,000	4,100	10,000	10,000	—		—	—	—	—	—
Hexachlorobenzene	mg/kg	4.00000	1.8	78	2.6	2.0	—		—	—	—	—	—
Hexachlorobutadiene	mg/kg	410	1,000	41	180	2.90000	—		—	—	—	—	—
Hexachlorocyclopentadiene	mg/kg	14,000	16	14,000	1.10000	400	—		—	—	—	—	—
Hexachloroethane	mg/kg	2,000	—	2,000	—	0.5	—		—	—	—	—	—
Isophorone	mg/kg	410,000	4,600	410,000	4,600	8.0	—		—	—	—	—	—
2-Methylnaphthalene	mg/kg	8,200	—	820	—	7.2	—		—	—	—	—	—
2-Methylphenol	mg/kg	100,000	—	100,000	—	15	—		—	—	—	—	—
4-Methylphenol	mg/kg	10,000	—	1,000	—	0.2	—		—	—	—	—	—
2-Nitroaniline	mg/kg	6,100	56	610	3.6	0.14	—		—	—	—	—	—
3-Nitroanaline	mg/kg	610	400	61	26	0.01	—		—	—	—	—	—
4-Nitroaniline	mg/kg	6,100	1,600	610	110	0.1	—		—	—	—	—	—
Nitrobenzene	mg/kg	1,000	140	1,000	9.4	0.26	—		—	—	—	—	—
2-Nitrophenol	mg/kg	—	—	—	—	—	—		—	—	—	—	—
4-Nitrophenol	mg/kg	16,000	—	16,000	—	—	—		—	—	—	—	—
N-Nitroso-di-n-propylamine	mg/kg	0.8	—	18	—	0.0018	—		—	—	—	—	—
N-nitrosodiphenylamine	mg/kg	41,000	270	4,100	1.8	1.0	—		—	—	—	—	—
2,2'-oxybis (1-chloropropane)	mg/kg	82,000	1,300	8,200	1,300	2.4	—		—	—	—	—	—
Pentachlorophenol	mg/kg	24	—	520	—	0.03	—		—	—	—	—	—
Phenol	mg/kg	610,000	—	61,000	—	100	—		—	—	—	—	—
1,2,4-Trichlorobenzene	mg/kg	20,000	3,200	2,000	920	5.0	—		—	—	—	—	—
2,4,5-Trichlorophenol	mg/kg	200,000	—	200,000	—	270	—		—	—	—	—	—
2,4,6-Trichlorophenol	mg/kg	520	390	11,000	540	0.66	—		—	—	—	—	—

Table 2 - Terracon Soil Analytical Results - SVOCs
650 West 83rd Street, Chicago, IL
Project Number:A2157000

Analyte	Units	IEPA Tier 1 Soil Remediation Objectives					Background	Sample Identification	B-128 (1-3)	B-129 (1-3)	B-130 (1-3)	B-130 (4-6)	B-131 (1-3)
		Industrial/Commercial Properties		Construction Workers		Soil Component of the Groundwater Ingestion Route		Sample Depth (feet)	1' - 3'	1' - 3'	1' - 3'	4' - 6'	1' - 3'
		Ingestion	Inhalation	Ingestion	Inhalation	Class I	Chicago	Date Collected	9/27/2013	9/27/2013	9/27/2013	9/27/2013	9/27/2013
Semivolatile Organic Analytical Parameters													
3,3'-Dichlorobenzidine	mg/kg	13	—	280	—	1.3	—		—	—	—	—	—
2,4-Dichlorophenol	mg/kg	6,100	—	610	—	1.0	—		—	—	—	—	—
Diethylphthalate	mg/kg	1,000,000	2,000	1,000,000	2,000	470	—		—	—	—	—	—
Dimethylphthalate	mg/kg	1,000,000	1,300	1,000,000	1,300	380	—		—	—	—	—	—
Di-n-butylphthalate	mg/kg	200,000	2,300	200,000	2,300	2,300	—		—	—	—	—	—
2,4-Dimethylphenol	mg/kg	41,000	—	41,000	—	9.0	—		—	—	—	—	—
4,6-Dinitro-2-methylphenol	mg/kg	200	—	820	—	—	—		—	—	—	—	—
2,4-Dinitrophenol	mg/kg	4,100	—	410	—	3.3	—		—	—	—	—	—
2,4-Dinitrotoluene	mg/kg	8.4	—	180	—	0.25	—		—	—	—	—	—
2,6-dinitrotoluene	mg/kg	8.4	—	180	—	0.26	—		—	—	—	—	—
Di-n-octylphthalate	mg/kg	41,000	10,000	4,100	10,000	10,000	—		—	—	—	—	—
Hexachlorobenzene	mg/kg	4.00000	1.8	78	2.6	2.0	—		—	—	—	—	—
Hexachlorobutadiene	mg/kg	410	1,000	41	180	2.90000	—		—	—	—	—	—
Hexachlorocyclopentadiene	mg/kg	14,000	16	14,000	1.10000	400	—		—	—	—	—	—
Hexachloroethane	mg/kg	2,000	—	2,000	—	0.5	—		—	—	—	—	—
Isophorone	mg/kg	410,000	4,600	410,000	4,600	8.0	—		—	—	—	—	—
2-Methylnaphthalene	mg/kg	8,200	—	820	—	7.2	—		—	—	—	—	—
2-Methylphenol	mg/kg	100,000	—	100,000	—	15	—		—	—	—	—	—
4-Methylphenol	mg/kg	10,000	—	1,000	—	0.2	—		—	—	—	—	—
2-Nitroaniline	mg/kg	6,100	56	610	3.6	0.14	—		—	—	—	—	—
3-Nitroanaline	mg/kg	610	400	61	26	0.01	—		—	—	—	—	—
4-Nitroaniline	mg/kg	6,100	1,600	610	110	0.1	—		—	—	—	—	—
Nitrobenzene	mg/kg	1,000	140	1,000	9.4	0.26	—		—	—	—	—	—
2-Nitrophenol	mg/kg	—	—	—	—	—	—		—	—	—	—	—
4-Nitrophenol	mg/kg	16,000	—	16,000	—	—	—		—	—	—	—	—
N-Nitroso-di-n-propylamine	mg/kg	0.8	—	18	—	0.0018	—		—	—	—	—	—
N-nitrosodiphenylamine	mg/kg	41,000	270	4,100	1.8	1.0	—		—	—	—	—	—
2,2'-oxybis (1-chloropropane)	mg/kg	82,000	1,300	8,200	1,300	2.4	—		—	—	—	—	—
Pentachlorophenol	mg/kg	24	—	520	—	0.03	—		—	—	—	—	—
Phenol	mg/kg	610,000	—	61,000	—	100	—		—	—	—	—	—
1,2,4-Trichlorobenzene	mg/kg	20,000	3,200	2,000	920	5.0	—		—	—	—	—	—
2,4,5-Trichlorophenol	mg/kg	200,000	—	200,000	—	270	—		—	—	—	—	—
2,4,6-Trichlorophenol	mg/kg	520	390	11,000	540	0.66	—		—	—	—	—	—

Table 2 - Terracon Soil Analytical Results - SVOCs
650 West 83rd Street, Chicago, IL
Project Number:A2157000

Analyte	Units	IEPA Tier 1 Soil Remediation Objectives					Background	Sample Identification	B-131 (4-6)	B-132 (1-3)	B-132 (4-6)	B-133 (1-3)	B-133 (4-6)
		Industrial/Commercial Properties		Construction Workers		Soil Component of the Groundwater Ingestion Route		Sample Depth (feet)	4' - 6'	1' - 3'	4' - 6'	1' - 3'	4' - 6'
		Ingestion	Inhalation	Ingestion	Inhalation	Class I	Chicago	Date Collected	9/27/2013	9/27/2013	9/27/2013	9/27/2013	9/27/2013
Semivolatile Organic Analytical Parameters													
3,3'-Dichlorobenzidine	mg/kg	13	—	280	—	*1.3*	—		—	—	—	—	—
2,4-Dichlorophenol	mg/kg	6,100	—	610	—	1.0	—		—	—	—	—	—
Diethylphthalate	mg/kg	1,000,000	2,000	1,000,000	2,000	470	—		—	—	—	—	—
Dimethylphthalate	mg/kg	1,000,000	1,300	1,000,000	1,300	380	—		—	—	—	—	—
Di-n-butylphthalate	mg/kg	200,000	2,300	200,000	2,300	2,300	—		—	—	—	—	—
2,4-Dimethylphenol	mg/kg	41,000	—	41,000	—	9.0	—		—	—	—	—	—
4,6-Dinitro-2-methylphenol	mg/kg	200	—	820	—	—	—		—	—	—	—	—
2,4-Dinitrophenol	mg/kg	4,100	—	410	—	*3.3*	—		—	—	—	—	—
2,4-Dinitrotoluene	mg/kg	8.4	—	180	—	*0.25*	—		—	—	—	—	—
2,6-dinitrotoluene	mg/kg	8.4	—	180	—	*0.26*	—		—	—	—	—	—
Di-n-octylphthalate	mg/kg	41,000	10,000	4,100	10,000	10,000	—		—	—	—	—	—
Hexachlorobenzene	mg/kg	4.00000	1.8	78	2.6	2.0	—		—	—	—	—	—
Hexachlorobutadiene	mg/kg	410	1,000	41	180	2.90000	—		—	—	—	—	—
Hexachlorocyclopentadiene	mg/kg	14,000	16	14,000	1.10000	400	—		—	—	—	—	—
Hexachloroethane	mg/kg	2,000	—	2,000	—	0.5	—		—	—	—	—	—
Isophorone	mg/kg	410,000	4,600	410,000	4,600	8.0	—		—	—	—	—	—
2-Methylnaphthalene	mg/kg	8,200	—	820	—	7.2	—		—	—	—	—	—
2-Methylphenol	mg/kg	100,000	—	100,000	—	15	—		—	—	—	—	—
4-Methylphenol	mg/kg	10,000	—	1,000	—	0.2	—		—	—	—	—	—
2-Nitroaniline	mg/kg	6,100	56	610	3.6	0.14	—		—	—	—	—	—
3-Nitroanaline	mg/kg	610	400	61	26	0.01	—		—	—	—	—	—
4-Nitroaniline	mg/kg	6,100	1,600	610	110	0.1	—		—	—	—	—	—
Nitrobenzene	mg/kg	1,000	140	1,000	9.4	*0.26*	—		—	—	—	—	—
2-Nitrophenol	mg/kg	—	—	—	—	—	—		—	—	—	—	—
4-Nitrophenol	mg/kg	16,000	—	16,000	—	—	—		—	—	—	—	—
N-Nitroso-di-n-propylamine	mg/kg	0.8	—	18	—	0.0018	—		—	—	—	—	—
N-nitrosodiphenylamine	mg/kg	41,000	270	4,100	1.8	1.0	—		—	—	—	—	—
2,2'-oxybis (1-chloropropane)	mg/kg	82,000	1,300	8,200	1,300	2.4	—		—	—	—	—	—
Pentachlorophenol	mg/kg	24	—	520	—	0.03	—		—	—	—	—	—
Phenol	mg/kg	610,000	—	61,000	—	100	—		—	—	—	—	—
1,2,4-Trichlorobenzene	mg/kg	20,000	3,200	2,000	920	5.0	—		—	—	—	—	—
2,4,5-Trichlorophenol	mg/kg	200,000	—	200,000	—	270	—		—	—	—	—	—
2,4,6-Trichlorophenol	mg/kg	520	390	11,000	540	*0.66*	—		—	—	—	—	—

Table 2 - Terracon Soil Analytical Results - SVOCs
650 West 83rd Street, Chicago, IL
Project Number:A2157000

Analyte	Units	IEPA Tier 1 Soil Remediation Objectives					Background	Sample Identification	B-207 (6-8')	B-208 (6-8')	B-209 (6-8')
		Industrial/Commercial Properties		Construction Workers		Soil Component of the Groundwater Ingestion Route		Sample Depth (feet)	(6-8')	(6-8')	(6-8')
		Ingestion	Inhalation	Ingestion	Inhalation	Class I	Chicago	Date Collected	02/20/2015	02/20/2015	02/20/2015
Semivolatile Organic Analytical Parameters											
3,3'-Dichlorobenzidine	mg/kg	13	---	280	—	*1.3*	---		--	--	--
2,4-Dichlorophenol	mg/kg	6,100	—	610	---	1.0	—		--	--	—
Diethylphthalate	mg/kg	1,000,000	2,000	1,000,000	2,000	470	---		--	--	--
Dimethylphthalate	mg/kg	1,000,000	1,300	1,000,000	1,300	380	—		--	--	—
Di-n-butylphthalate	mg/kg	200,000	2,300	200,000	2,300	2,300	---		—	--	--
2,4-Dimethylphenol	mg/kg	41,000	—	41,000	---	9.0	—		—	—	—
4,6-Dinitro-2-methylphenol	mg/kg	200	---	820	—	—	—		--	--	--
2,4-Dinitrophenol	mg/kg	4,100	—	410	—	*3.3*	---		—	—	—
2,4-Dinitrotoluene	mg/kg	8.4	---	180	—	*0.25*	---		--	--	--
2,6-dinitrotoluene	mg/kg	8.4	—	180	---	*0.26*	—		—	—	—
Di-n-octylphthalate	mg/kg	41,000	10,000	4,100	10,000	10,000	---		--	--	--
Hexachlorobenzene	mg/kg	4.00000	1.8	78	2.6	2.0	---		—	—	—
Hexachlorobutadiene	mg/kg	410	1,000	41	180	2.90000	---		--	--	--
Hexachlorocyclopentadiene	mg/kg	14,000	16	14,000	1.10000	400	—		—	—	—
Hexachloroethane	mg/kg	2,000	---	2,000	—	0.5	---		--	--	--
Isophorone	mg/kg	410,000	4,600	410,000	4,600	8.0	—		—	—	—
2-Methylnaphthalene	mg/kg	8,200	---	820	—	7.2	---		--	--	--
2-Methylphenol	mg/kg	100,000	---	100,000	—	15	---		—	—	--
4-Methylphenol	mg/kg	10,000	—	1,000	---	0.2	—		--	--	--
2-Nitroaniline	mg/kg	6,100	56	610	3.6	0.14	---		—	—	--
3-Nitroanaline	mg/kg	610	400	61	26	0.01	—		--	--	--
4-Nitroaniline	mg/kg	6,100	1,600	610	110	0.1	—		—	—	--
Nitrobenzene	mg/kg	1,000	140	1,000	9.4	*0.26*	—		--	--	--
2-Nitrophenol	mg/kg	---	---	—	---	---	---		—	—	--
4-Nitrophenol	mg/kg	16,000	—	16,000	---	—	—		--	--	—
N-Nitroso-di-n-propylamine	mg/kg	0.8	---	18	—	0.0018	---		—	—	--
N-nitrosodiphenylamine	mg/kg	41,000	270	4,100	1.8	1.0	—		--	--	—
2,2'-oxybis (1-chloropropane)	mg/kg	82,000	1,300	8,200	1,300	2.4	---		--	--	--
Pentachlorophenol	mg/kg	24	—	520	—	0.03	---		—	—	—
Phenol	mg/kg	610,000	—	61,000	—	100	---		—	—	--
1,2,4-Trichlorobenzene	mg/kg	20,000	3,200	2,000	920	5.0	—		--	--	—
2,4,5-Trichlorophenol	mg/kg	200,000	---	200,000	—	270	---		—	—	--
2,4,6-Trichlorophenol	mg/kg	520	390	11,000	540	*0.66*	—		--	--	—

Table 3 - Terracon Soil Analytical Results - Inorganic Constituents
650 West 83rd Street, Chicago, IL
Project Number:A2157000

Analyte	Units	IEPA Tier 1 Soil Remediation Objectives				Sample Identification	B-1 (1-3)	B-1 (4-6)	B-2 (1-3)	B-2 (6-8)	B-3 (1-3)	B-3 (4-6)	B-4 (1-3)
		Industrial/Commercial Properties		Construction Workers		Sample Depth (feet)	1' - 3'	4' - 6'	1' - 3'	6' - 8'	1' - 3'	4' - 6'	1' - 3'
						Date Collected	6/27/2013	6/27/2013	6/27/2013	6/27/2013	6/27/2013	6/27/2013	6/27/2013
		Ingestion	Inhalation	Ingestion	Inhalation								
Inorganic Analytical Parameters													
Arsenic	mg/kg	13	1,200	61	25,000		4.6	3.9	8.4	10	11	19	23
Barium	mg/kg	140,000	910,000	14,000	870,000		100	140	120	74	390	140	110
Cadmium	mg/kg	2,000	2,800	200	59,000		0.75	< 0.57	1.3	< 0.56	5	8.2	0.79
Chromium, total	mg/kg	6,100	420	4,100	690		24	6.7	12	12	18	13	13
Lead	mg/kg	800	—	700	—		170	39	370	19	550	1300	290
Mercury	mg/kg	610	16	61	0.1		1.5	< 0.02	1.8	< 0.019	0.13	1	0.073
Selenium	mg/kg	10,000	—	1,000	—		< 1.1	< 1.1	< 1.1	< 1.1	1.5	3	1.3
Silver	mg/kg	10,000	—	1,000	—		< 1.1	< 1.1	< 1.1	< 1.1	< 1.2	< 1.5	< 1.2
Aluminum	mg/kg	1,000,000	1,000,000	200,000	870,000		5200	10000	—	—	—	—	—
Antimony	mg/kg	820	—	82	—		< 2.3	< 2.3	—	—	—	—	—
Beryllium	mg/kg	4,100	2,100	410	44,000		0.72	1.1	—	—	—	—	—
Calcium	mg/kg	—	—	—	—		160000	200000	—	—	—	—	—
Cobalt	mg/kg	120,000	—	12,000	—		3.4	3.1	—	—	—	—	—
Copper	mg/kg	82,000	—	8,200	—		45	10	—	—	—	—	—
Cyanide	mg/kg	41,000	—	4,100	—		< 0.27	< 0.29	—	—	—	—	—
Iron	mg/kg	—	—	—	—		14000	20000	—	—	—	—	—
Magnesium	mg/kg	—	—	730,000	—		74000	53000	—	—	—	—	—
Manganese	mg/kg	41,000	91,000	4,100	8,700		660	1800	—	—	—	—	—
Nickel	mg/kg	41,000	21,000	4,100	440,000		12	10	—	—	—	—	—
Potassium	mg/kg	—	—	—	—		820	570	—	—	—	—	—
Sodium	mg/kg	—	—	—	—		340	250	—	—	—	—	—
Thallium	mg/kg	160	—	160	—		< 1.1	< 1.1	—	—	—	—	—
Vanadium	mg/kg	14,000	—	1,400	—		29	11	—	—	—	—	—
Zinc	mg/kg	610,000	—	61,000	—		140	47	—	—	—	—	—

Table 3 - Terracon Soil Analytical Results - Inorganic Constituents
650 West 83rd Street, Chicago, IL
Project Number:A2157000

Analyte	Units	IEPA Tier 1 Soil Remediation Objectives				Sample Identification	B-4 (4-6)	B-5 (1-3)	B-5 (4-6)	B-6 (1-3)	B-6 (6-8)	B-7 (1-3)	B-7 (4-6)
		Industrial/Commercial Properties		Construction Workers		Sample Depth (feet)	4' - 6'	1' - 3'	4' - 6'	1' - 3'	6' - 8'	1' - 3'	4' - 6'
		Ingestion	Inhalation	Ingestion	Inhalation	Date Collected	6/27/2013	6/25/2013	6/25/2013	6/25/2013	6/25/2013	6/27/2013	6/27/2013
Inorganic Analytical Parameters													
Arsenic	mg/kg	13	1,200	61	25,000		18	29	7.1	16	4.4	6.1	15
Barium	mg/kg	140,000	910,000	14,000	870,000		400	2500	290	63	120	220	240
Cadmium	mg/kg	2,000	2,800	200	59,000		3.8	6.6	< 0.53	0.59	6.8	3.5	1.3
Chromium, total	mg/kg	6,100	420	4,100	690		9.9	64	20	22	12	52	13
Lead	mg/kg	800	---	700	---		680	3600	370	24	19	720	550
Mercury	mg/kg	610	16	61	0.1		0.27	0.65	0.078	< 0.023	< 0.025	0.094	0.72
Selenium	mg/kg	10,000	---	1,000	---		< 1.2	1.9	< 1.1	< 1.1	1.2	< 1.2	2.3
Silver	mg/kg	10,000	---	1,000	---		1.6	2	< 1.1	< 1.1	< 1.2	< 1.2	< 1.8
Aluminum	mg/kg	1,000,000	1,000,000	200,000	870,000		--	--	--	--	--	--	--
Antimony	mg/kg	820	---	82	---		--	--	--	--	--	--	--
Beryllium	mg/kg	4,100	2,100	410	44,000		--	--	--	--	--	--	--
Calcium	mg/kg	---	---	---	---		--	--	--	--	--	--	--
Cobalt	mg/kg	120,000	---	12,000	---		--	--	--	--	--	--	--
Copper	mg/kg	82,000	---	8,200	---		--	--	--	--	--	--	--
Cyanide	mg/kg	41,000	---	4,100	---		--	--	--	--	--	--	--
Iron	mg/kg	---	---	---	---		--	--	--	--	--	--	--
Magnesium	mg/kg	---	---	730,000	---		--	--	--	--	--	--	--
Manganese	mg/kg	41,000	91,000	4,100	8,700		--	--	--	--	--	--	--
Nickel	mg/kg	41,000	21,000	4,100	440,000		--	--	--	--	--	--	--
Potassium	mg/kg	---	---	---	---		--	--	--	--	--	--	--
Sodium	mg/kg	---	---	---	---		--	--	--	--	--	--	--
Thallium	mg/kg	160	---	160	---		--	--	--	--	--	--	--
Vanadium	mg/kg	14,000	---	1,400	---		--	--	--	--	--	--	--
Zinc	mg/kg	610,000	---	61,000	---		--	--	--	--	--	--	--

Table 3 - Terracon Soil Analytical Results - Inorganic Constituents
650 West 83rd Street, Chicago, IL
Project Number:A2157000

Analyte	Units	IEPA Tier 1 Soil Remediation Objectives				Sample Identification	B-8 (1-3)	B-8 (4-6)	B-9 (1-3)	B-9 (4-6)	B-10 (1-3)	B-10 (4-6)	B-11 (1-3)
		Industrial/Commercial Properties		Construction Workers		Sample Depth (feet)	1' - 3'	4' - 6'	1' - 3'	4' - 6'	1' - 3'	4' - 6'	1' - 3'
		Ingestion	Inhalation	Ingestion	Inhalation	Date Collected	6/26/2013	6/26/2013	6/26/2013	6/26/2013	6/25/2013	6/25/2013	6/27/2013
Inorganic Analytical Parameters													
Arsenic	mg/kg	13	1,200	61	25,000		4.8	7.2	6.6	7.2	11	7.2	13
Barium	mg/kg	140,000	910,000	14,000	870,000		120	230	490	230	41	80	920
Cadmium	mg/kg	2,000	2,800	200	59,000		< 0.61	1.2	< 0.58	1.1	< 0.55	< 0.61	3.1
Chromium, total	mg/kg	6,100	420	4,100	690		13	15	13	18	17	17	14
Lead	mg/kg	800	---	700	---		130	57	64	140	31	76	33000
Mercury	mg/kg	610	16	61	0.1		< 0.023	0.038	0.041	0.34	0.026	0.5	< 0.024
Selenium	mg/kg	10,000	---	1,000	---		< 1.2	< 1.2	< 1.2	< 1.5	< 1.1	< 1.2	1.4
Silver	mg/kg	10,000	---	1,000	---		< 1.2	< 1.2	< 1.2	< 1.5	< 1.1	< 1.2	< 1.1
Aluminum	mg/kg	1,000,000	1,000,000	200,000	870,000		--	8500	--	--	--	--	--
Antimony	mg/kg	820	---	82	---		--	< 2.4	--	--	--	--	--
Beryllium	mg/kg	4,100	2,100	410	44,000		--	2.5	--	--	--	--	--
Calcium	mg/kg	---	---	---	---		--	24000	--	--	--	--	--
Cobalt	mg/kg	120,000	---	12,000	---		--	5.7	--	--	--	--	--
Copper	mg/kg	82,000	---	8,200	---		--	20	--	--	--	--	--
Cyanide	mg/kg	41,000	---	4,100	---		--	< 0.33	--	--	--	--	--
Iron	mg/kg	---	---	---	---		--	24000	--	--	--	--	--
Magnesium	mg/kg	---	---	730,000	---		--	8400	--	--	--	--	--
Manganese	mg/kg	41,000	91,000	4,100	8,700		--	230	--	--	--	--	--
Nickel	mg/kg	41,000	21,000	4,100	440,000		--	20	--	--	--	--	--
Potassium	mg/kg	---	---	---	---		--	970	--	--	--	--	--
Sodium	mg/kg	---	---	---	---		--	540	--	--	--	--	--
Thallium	mg/kg	160	---	160	---		--	< 1.2	--	--	--	--	--
Vanadium	mg/kg	14,000	---	1,400	---		--	28	--	--	--	--	--
Zinc	mg/kg	610,000	---	61,000	---		--	110	--	--	--	--	--

Table 3 - Terracon Soil Analytical Results - Inorganic Constituents
650 West 83rd Street, Chicago, IL
Project Number:A2157000

Analyte	Units	IEPA Tier 1 Soil Remediation Objectives				Sample Identification	B-11 (4-6)	B-12 (1-3)	B-12 (4-6)	B-13 (1-3)	B-13 (4-6)	B-14 (1-3)	B-14 (6-8)
		Industrial/Commercial Properties		Construction Workers		Sample Depth (feet)	4' - 6'	1' - 3'	4' - 6'	1' - 3'	4' - 6'	1' - 3'	6' - 8'
		Ingestion	Inhalation	Ingestion	Inhalation	Date Collected	6/27/2013	6/28/2013	6/28/2013	6/28/2013	6/28/2013	6/27/2013	6/27/2013
Inorganic Analytical Parameters													
Arsenic	mg/kg	13	1,200	61	25,000		3.6	12	7.7	19	7.4	3.4	12
Barium	mg/kg	140,000	910,000	14,000	870,000		55	86	63	200	260	21	140
Cadmium	mg/kg	2,000	2,800	200	59,000		< 0.58	1.3	< 0.63	1.6	< 1.3	< 0.53	< 0.54
Chromium, total	mg/kg	6,100	420	4,100	690		7.8	18	19	13	7.1	4.5	17
Lead	mg/kg	800	—	700	—		320	140	42	340	1000	58	350
Mercury	mg/kg	610	16	61	0.1		< 0.019	0.73	0.63	< 0.021	< 0.024	0.039	0.18
Selenium	mg/kg	10,000	—	1,000	—		< 1.2	< 1.2	< 1.3	< 2.3	< 2.6	< 1.1	< 1.1
Silver	mg/kg	10,000	—	1,000	—		< 1.2	< 1.2	< 1.3	< 2.3	< 2.6	< 1.1	< 1.1
Aluminum	mg/kg	1,000,000	1,000,000	200,000	870,000		3500	--	--	--	--	--	--
Antimony	mg/kg	820	—	82	—		< 2.3	--	--	--	--	--	--
Beryllium	mg/kg	4,100	2,100	410	44,000		0.65	--	--	--	--	--	--
Calcium	mg/kg	—	—	—	—		86000	--	--	--	--	--	--
Cobalt	mg/kg	120,000	—	12,000	—		5.7	--	--	--	--	--	--
Copper	mg/kg	82,000	—	8,200	—		7.2	--	--	--	--	--	--
Cyanide	mg/kg	41,000	—	4,100	—		< 0.31	--	--	--	--	--	--
Iron	mg/kg	—	—	—	—		12000	--	--	--	--	--	--
Magnesium	mg/kg	—	—	730,000	—		29000	--	--	--	--	--	--
Manganese	mg/kg	41,000	91,000	4,100	8,700		390	--	--	--	--	--	--
Nickel	mg/kg	41,000	21,000	4,100	440,000		11	--	--	--	--	--	--
Potassium	mg/kg	—	—	—	—		390	--	--	--	--	--	--
Sodium	mg/kg	—	—	—	—		290	--	--	--	--	--	--
Thallium	mg/kg	160	—	160	—		< 1.2	--	--	--	--	--	--
Vanadium	mg/kg	14,000	—	1,400	—		15	--	--	--	--	--	--
Zinc	mg/kg	610,000	—	61,000	—		70	--	--	--	--	--	--

Table 3 - Terracon Soil Analytical Results - Inorganic Constituents
650 West 83rd Street, Chicago, IL
Project Number:A2157000

Analyte	Units	IEPA Tier 1 Soil Remediation Objectives				Sample Identification	B-15 (1-3)	B-15 (4-6)	B-16 (1-3)	B-16 (4-6)	B-17 (1-3)	B-17 (4-6)	B-18 (1-3)
		Industrial/Commercial Properties		Construction Workers		Sample Depth (feet)	1' - 3'	4' - 6'	1' - 3'	4' - 6'	1' - 3'	4' - 6'	1' - 3'
		Ingestion	Inhalation	Ingestion	Inhalation	Date Collected	6/27/2013	6/27/2013	6/27/2013	6/27/2013	6/26/2013	6/26/2013	6/26/2013
Inorganic Analytical Parameters													
Arsenic	mg/kg	13	1,200	61	25,000		4	4.4	7.8	23	14	31	8.1
Barium	mg/kg	140,000	910,000	14,000	870,000		180	130	92	1000	880	560	1500
Cadmium	mg/kg	2,000	2,800	200	59,000		< 0.54	< 0.52	< 0.5	2.3	3.2	2.4	0.82
Chromium, total	mg/kg	6,100	420	4,100	690		14	10	26	17	35	30	23
Lead	mg/kg	800	—	700	—		240	13	120	7700	1200	890	150
Mercury	mg/kg	610	16	61	0.1		0.054	< 0.017	0.024	0.13	0.2	0.17	0.096
Selenium	mg/kg	10,000	—	1,000	—		< 1.1	< 1	< 1	1.4	< 1.1	2.3	< 1.1
Silver	mg/kg	10,000	—	1,000	—		< 1.1	< 1	< 1	< 1.4	1.7	< 1.5	< 1.1
Aluminum	mg/kg	1,000,000	1,000,000	200,000	870,000		--	--	13000	9400	--	--	--
Antimony	mg/kg	820	—	82	—		--	--	< 2	630	--	--	--
Beryllium	mg/kg	4,100	2,100	410	44,000		--	--	0.86	2.6	--	--	--
Calcium	mg/kg	—	—	—	—		--	--	48000	15000	--	--	--
Cobalt	mg/kg	120,000	—	12,000	—		--	--	14	7.3	--	--	--
Copper	mg/kg	82,000	—	8,200	—		--	--	41	90	--	--	--
Cyanide	mg/kg	41,000	—	4,100	—		--	--	< 0.29	< 0.34	--	--	--
Iron	mg/kg	—	—	—	—		--	--	29000	36000	--	--	--
Magnesium	mg/kg	—	—	730,000	—		--	--	23000	3900	--	--	--
Manganese	mg/kg	41,000	91,000	4,100	8,700		--	--	460	440	--	--	--
Nickel	mg/kg	41,000	21,000	4,100	440,000		--	--	36	36	--	--	--
Potassium	mg/kg	—	—	—	—		--	--	2100	2200	--	--	--
Sodium	mg/kg	—	—	—	—		--	--	670	1400	--	--	--
Thallium	mg/kg	160	—	160	—		--	--	< 1	< 1.4	--	--	--
Vanadium	mg/kg	14,000	—	1,400	—		--	--	24	42	--	--	--
Zinc	mg/kg	610,000	—	61,000	—		--	--	78	380	--	--	--

Table 3 - Terracon Soil Analytical Results - Inorganic Constituents
650 West 83rd Street, Chicago, IL
Project Number:A2157000

Analyte	Units	IEPA Tier 1 Soil Remediation Objectives				Sample Identification	B-18 (4-6)	B-19 (1-3)	B-19 (4-6)	B-20 (1-3)	B-20 (4-6)	B-21 (1-3)	B-21 (4-6)
		Industrial/Commercial Properties		Construction Workers		Sample Depth (feet)	4' - 6'	1' - 3'	4' - 6'	1' - 3'	4' - 6'	1' - 3'	4' - 6'
		Ingestion	Inhalation	Ingestion	Inhalation	Date Collected	6/26/2013	6/26/2013	6/26/2013	6/27/2013	6/27/2013	6/27/2013	6/27/2013
Inorganic Analytical Parameters													
Arsenic	mg/kg	13	1,200	61	25,000		3.3	7.3	1.9	7.9	8.7	5.6	2.2
Barium	mg/kg	140,000	910,000	14,000	870,000		69	130	42	120	90	180	18
Cadmium	mg/kg	2,000	2,800	200	59,000		< 0.63	0.7	< 0.7	0.84	3	1.1	< 0.64
Chromium, total	mg/kg	6,100	420	4,100	690		7.9	12	9.6	13	12	10	7.4
Lead	mg/kg	800	—	700	—		310	150	11	180	31	12	6.1
Mercury	mg/kg	610	16	61	0.1		0.053	0.086	< 0.025	< 0.022	< 0.026	< 0.023	< 0.024
Selenium	mg/kg	10,000	—	1,000	—		< 1.3	< 1.1	< 1.4	< 1.3	1.7	< 1.2	< 1.3
Silver	mg/kg	10,000	—	1,000	—		< 1.3	< 1.1	< 1.4	< 1.3	< 1.4	< 1.2	< 1.3
Aluminum	mg/kg	1,000,000	1,000,000	200,000	870,000		--	--	--	6500	--	--	--
Antimony	mg/kg	820	—	82	—		--	--	--	< 2.6	--	--	--
Beryllium	mg/kg	4,100	2,100	410	44,000		--	--	--	1	--	--	--
Calcium	mg/kg	—	—	—	—		--	--	--	57000	--	--	--
Cobalt	mg/kg	120,000	—	12,000	—		--	--	--	7.8	--	--	--
Copper	mg/kg	82,000	—	8,200	—		--	--	--	25	--	--	--
Cyanide	mg/kg	41,000	—	4,100	—		--	--	--	< 0.31	--	--	--
Iron	mg/kg	—	—	—	—		--	--	--	20000	--	--	--
Magnesium	mg/kg	—	—	730,000	—		--	--	--	20000	--	--	--
Manganese	mg/kg	41,000	91,000	4,100	8,700		--	--	--	370	--	--	--
Nickel	mg/kg	41,000	21,000	4,100	440,000		--	--	--	20	--	--	--
Potassium	mg/kg	—	—	—	—		--	--	--	1000	--	--	--
Sodium	mg/kg	—	—	—	—		--	--	--	270	--	--	--
Thallium	mg/kg	160	—	160	—		--	--	--	< 1.3	--	--	--
Vanadium	mg/kg	14,000	—	1,400	—		--	--	--	24	--	--	--
Zinc	mg/kg	610,000	—	61,000	—		--	--	--	120	--	--	--

Table 3 - Terracon Soil Analytical Results - Inorganic Constituents
650 West 83rd Street, Chicago, IL
Project Number:A2157000

Analyte	Units	IEPA Tier 1 Soil Remediation Objectives				Sample Identification	B-24 (1-3)	B-24 (6-8)	B-25 (1-3)	B-25 (4-6)	B-26 (1-3)	B-26 (6-8)	B-27 (1-3)
		Industrial/Commercial Properties		Construction Workers		Sample Depth (feet)	1' - 3'	6' - 8'	1' - 3'	4' - 6'	1' - 3'	6' - 8'	1' - 3'
		Ingestion	Inhalation	Ingestion	Inhalation	Date Collected	6/27/2013	6/27/2013	6/26/2013	6/26/2013	6/26/2013	6/26/2013	6/26/2013
Inorganic Analytical Parameters													
Arsenic	mg/kg	13	1,200	61	25,000		4.4	7.5	11	6.5	27	7.3	19
Barium	mg/kg	140,000	910,000	14,000	870,000		73	71	120	530	300	47	350
Cadmium	mg/kg	2,000	2,800	200	59,000		0.88	< 0.77	< 0.61	1.4	2.1	< 0.55	2.3
Chromium, total	mg/kg	6,100	420	4,100	690		8.8	10	15	18	18	16	23
Lead	mg/kg	800	—	700	—		160	38	150	180	600	18	790
Mercury	mg/kg	610	16	61	0.1		0.19	0.051	0.17	0.046	0.36	< 0.023	0.47
Selenium	mg/kg	10,000	—	1,000	—		< 1	1.7	< 1.2	< 1.3	1.6	< 1.1	1.2
Silver	mg/kg	10,000	—	1,000	—		< 1	< 1.5	< 1.2	< 1.3	< 1.1	< 1.1	< 1.2
Aluminum	mg/kg	1,000,000	1,000,000	200,000	870,000		--	--	--	--	--	--	--
Antimony	mg/kg	820	—	82	—		--	--	--	--	--	--	--
Beryllium	mg/kg	4,100	2,100	410	44,000		--	--	--	--	--	--	--
Calcium	mg/kg	—	—	—	—		--	--	--	--	--	--	--
Cobalt	mg/kg	120,000	—	12,000	—		--	--	--	--	--	--	--
Copper	mg/kg	82,000	—	8,200	—		--	--	--	--	--	--	--
Cyanide	mg/kg	41,000	—	4,100	—		--	--	--	--	--	--	--
Iron	mg/kg	—	—	—	—		--	--	--	--	--	--	--
Magnesium	mg/kg	—	—	730,000	—		--	--	--	--	--	--	--
Manganese	mg/kg	41,000	91,000	4,100	8,700		--	--	--	--	--	--	--
Nickel	mg/kg	41,000	21,000	4,100	440,000		--	--	--	--	--	--	--
Potassium	mg/kg	—	—	—	—		--	--	--	--	--	--	--
Sodium	mg/kg	—	—	—	—		--	--	--	--	--	--	--
Thallium	mg/kg	160	—	160	—		--	--	--	--	--	--	--
Vanadium	mg/kg	14,000	—	1,400	—		--	--	--	--	--	--	--
Zinc	mg/kg	610,000	—	61,000	—		--	--	--	--	--	--	--

Table 3 - Terracon Soil Analytical Results - Inorganic Constituents
650 West 83rd Street, Chicago, IL
Project Number:A2157000

Analyte	Units	IEPA Tier 1 Soil Remediation Objectives				Sample Identification	B-27 (6-8)	B-28 (1-3)	B-28 (4-6)	B-29 (1-3)	B-29 (4-6)	B-30 (1-3)	B-30 (4-6)
		Industrial/Commercial Properties		Construction Workers		Sample Depth (feet)	6' - 8'	1' - 3'	4' - 6'	1' - 3'	4' - 6'	1' - 3'	4' - 6'
		Ingestion	Inhalation	Ingestion	Inhalation	Date Collected	6/26/2013	6/28/2013	6/28/2013	6/28/2013	6/28/2013	6/28/2013	6/28/2013
Inorganic Analytical Parameters													
Arsenic	mg/kg	13	1,200	61	25,000		13	8.4	11	12	15	5.6	15
Barium	mg/kg	140,000	910,000	14,000	870,000		340	360	24	230	170	12	62
Cadmium	mg/kg	2,000	2,800	200	59,000		4.3	1.2	< 0.55	1	< 0.54	< 0.68	< 0.62
Chromium, total	mg/kg	6,100	420	4,100	690		40	12	7.6	14	6.9	8.4	17
Lead	mg/kg	800	---	700	—		620	510	14	430	140	13	67
Mercury	mg/kg	610	16	61	0.1		0.38	0.31	0.032	0.14	< 0.023	< 0.024	0.32
Selenium	mg/kg	10,000	—	1,000	---		< 1.4	< 1.1	< 1.1	< 1.2	< 1.1	< 1.4	< 1.2
Silver	mg/kg	10,000	—	1,000	---		1.4	< 1.1	< 1.1	< 1.2	< 1.1	< 1.4	< 1.2
Aluminum	mg/kg	1,000,000	1,000,000	200,000	870,000		--	--	--	--	--	--	--
Antimony	mg/kg	820	---	82	—		--	--	--	--	--	--	--
Beryllium	mg/kg	4,100	2,100	410	44,000		--	--	--	--	--	--	--
Calcium	mg/kg	---	---	---	---		--	--	--	--	--	--	--
Cobalt	mg/kg	120,000	—	12,000	---		--	--	--	--	--	--	--
Copper	mg/kg	82,000	—	8,200	---		--	--	--	--	--	--	--
Cyanide	mg/kg	41,000	—	4,100	---		--	--	--	--	--	--	--
Iron	mg/kg	---	---	---	—		--	--	--	--	--	--	--
Magnesium	mg/kg	---	---	730,000	—		--	--	--	--	--	--	--
Manganese	mg/kg	41,000	91,000	4,100	8,700		--	--	--	--	--	--	--
Nickel	mg/kg	41,000	21,000	4,100	440,000		--	--	--	--	--	--	--
Potassium	mg/kg	---	---	---	—		--	--	--	--	--	--	--
Sodium	mg/kg	---	---	---	---		--	--	--	--	--	--	--
Thallium	mg/kg	160	—	160	---		--	--	--	--	--	--	--
Vanadium	mg/kg	14,000	—	1,400	---		--	--	--	--	--	--	--
Zinc	mg/kg	610,000	—	61,000	—		--	--	--	--	--	--	--

Table 3 - Terracon Soil Analytical Results - Inorganic Constituents
650 West 83rd Street, Chicago, IL
Project Number:A2157000

Analyte	Units	IEPA Tier 1 Soil Remediation Objectives				Sample Identification	B-31 (1-3)	B-31 (6-8)	B-32 (1-3)	B-32 (6-8)	B-33 (1-3)	B-33 (4-6)	B-34 (1-3)
		Industrial/Commercial Properties		Construction Workers		Sample Depth (feet)	1' - 3'	6' - 8'	1' - 3'	6' - 8'	1' - 3'	4' - 6'	1' - 3'
		Ingestion	Inhalation	Ingestion	Inhalation	Date Collected	6/27/2013	6/27/2013	6/26/2013	6/26/2013	6/26/2013	6/26/2013	6/25/2013
Inorganic Analytical Parameters													
Arsenic	mg/kg	13	1,200	61	25,000		7.1	6.2	8.8	6.8	6.3	6.4	6.3
Barium	mg/kg	140,000	910,000	14,000	870,000		100	50	200	110	64	110	170
Cadmium	mg/kg	2,000	2,800	200	59,000		1	0.65	0.81	< 0.9	0.52	< 0.64	0.68
Chromium, total	mg/kg	6,100	420	4,100	690		12	13	16	28	17	9.8	14
Lead	mg/kg	800	—	700	—		370	24	260	29	110	44	100
Mercury	mg/kg	610	16	61	0.1		0.12	0.025	0.12	0.039	0.054	0.14	0.42
Selenium	mg/kg	10,000	—	1,000	—		< 1	< 1.3	< 1.1	< 1.8	< 1	< 1.3	< 1.2
Silver	mg/kg	10,000	—	1,000	—		< 1	< 1.3	< 1.1	< 1.8	< 1	< 1.3	< 1.2
Aluminum	mg/kg	1,000,000	1,000,000	200,000	870,000		--	--	--	--	--	--	8600
Antimony	mg/kg	820	—	82	—		--	--	--	--	--	--	< 2.3
Beryllium	mg/kg	4,100	2,100	410	44,000		--	--	--	--	--	--	1.9
Calcium	mg/kg	—	—	—	—		--	--	--	--	--	--	33000
Cobalt	mg/kg	120,000	—	12,000	—		--	--	--	--	--	--	6.7
Copper	mg/kg	82,000	—	8,200	—		--	--	--	--	--	--	32
Cyanide	mg/kg	41,000	—	4,100	—		--	--	--	--	--	--	< 0.3
Iron	mg/kg	—	—	—	—		--	--	--	--	--	--	19000
Magnesium	mg/kg	—	—	730,000	—		--	--	--	--	--	--	15000
Manganese	mg/kg	41,000	91,000	4,100	8,700		--	--	--	--	--	--	290
Nickel	mg/kg	41,000	21,000	4,100	440,000		--	--	--	--	--	--	32
Potassium	mg/kg	—	—	—	—		--	--	--	--	--	--	990
Sodium	mg/kg	—	—	—	—		--	--	--	--	--	--	1100
Thallium	mg/kg	160	—	160	—		--	--	--	--	--	--	< 1.2
Vanadium	mg/kg	14,000	—	1,400	—		--	--	--	--	--	--	30
Zinc	mg/kg	610,000	—	61,000	—		--	--	--	--	--	--	140

Table 3 - Terracon Soil Analytical Results - Inorganic Constituents
650 West 83rd Street, Chicago, IL
Project Number:A2157000

Analyte	Units	IEPA Tier 1 Soil Remediation Objectives				Sample Identification	B-34 (4-6)	B-35 (1-3)	B-35 (4-6)	B-36 (1-3)	B-36 (4-6)	B-37 (1-3)	B-37 (6-8)
		Industrial/Commercial Properties		Construction Workers		Sample Depth (feet)	4' - 6'	1' - 3'	4' - 6'	1' - 3'	4' - 6'	1' - 3'	6' - 8'
		Ingestion	Inhalation	Ingestion	Inhalation	Date Collected	6/25/2013	6/26/2013	6/26/2013	6/26/2013	6/26/2013	6/27/2013	6/27/2013
Inorganic Analytical Parameters													
Arsenic	mg/kg	13	1,200	61	25,000		2.4	16	24	9.5	11	5.5	5.6
Barium	mg/kg	140,000	910,000	14,000	870,000		45	660	1000	4000	74	140	66
Cadmium	mg/kg	2,000	2,800	200	59,000		< 0.63	2.5	6.6	1.9	< 0.55	1.2	< 0.59
Chromium, total	mg/kg	6,100	420	4,100	690		13	24	39	19	19	19	14
Lead	mg/kg	800	—	700	—		19	680	920	160	19	190	330
Mercury	mg/kg	610	16	61	0.1		< 0.02	0.75	1.5	0.098	0.027	0.17	0.21
Selenium	mg/kg	10,000	—	1,000	—		< 1.3	< 1.2	< 1.5	< 1.1	< 1.1	< 1.1	< 1.2
Silver	mg/kg	10,000	—	1,000	—		< 1.3	< 1.2	2.7	< 1.1	< 1.1	< 1.1	< 1.2
Aluminum	mg/kg	1,000,000	1,000,000	200,000	870,000		--	--	--	--	--	--	--
Antimony	mg/kg	820	—	82	—		--	--	--	--	--	--	--
Beryllium	mg/kg	4,100	2,100	410	44,000		--	--	--	--	--	--	--
Calcium	mg/kg	—	—	—	—		--	--	--	--	--	--	--
Cobalt	mg/kg	120,000	—	12,000	—		--	--	--	--	--	--	--
Copper	mg/kg	82,000	—	8,200	—		--	--	--	--	--	--	--
Cyanide	mg/kg	41,000	—	4,100	—		--	--	--	--	--	--	--
Iron	mg/kg	—	—	—	—		--	--	--	--	--	--	--
Magnesium	mg/kg	—	—	730,000	—		--	--	--	--	--	--	--
Manganese	mg/kg	41,000	91,000	4,100	8,700		--	--	--	--	--	--	--
Nickel	mg/kg	41,000	21,000	4,100	440,000		--	--	--	--	--	--	--
Potassium	mg/kg	—	—	—	—		--	--	--	--	--	--	--
Sodium	mg/kg	—	—	—	—		--	--	--	--	--	--	--
Thallium	mg/kg	160	—	160	—		--	--	--	--	--	--	--
Vanadium	mg/kg	14,000	—	1,400	—		--	--	--	--	--	--	--
Zinc	mg/kg	610,000	—	61,000	—		--	--	--	--	--	--	--

Table 3 - Terracon Soil Analytical Results - Inorganic Constituents
650 West 83rd Street, Chicago, IL
Project Number:A2157000

Analyte	Units	IEPA Tier 1 Soil Remediation Objectives				Sample Identification	B-119 (1-3)	B-119 (6-8)	B-122 (4-6)	B-123 (4-6)
		Industrial/Commercial Properties		Construction Workers		Sample Depth (feet)	1' - 3'	6' - 8'	4' - 6'	4' - 6'
		Ingestion	Inhalation	Ingestion	Inhalation	Date Collected	9/27/2013	9/27/2013	9/26/2013	9/26/2013
Inorganic Analytical Parameters										
Arsenic	mg/kg	13	1,200	61	25,000		--	--	13	8.2
Barium	mg/kg	140,000	910,000	14,000	870,000		--	--	--	--
Cadmium	mg/kg	2,000	2,800	200	59,000		--	--	--	--
Chromium, total	mg/kg	6,100	420	4,100	690		--	--	--	--
Lead	mg/kg	800	---	700	---		990	14	--	--
Mercury	mg/kg	610	16	61	0.1		--	--	--	--
Selenium	mg/kg	10,000	---	1,000	---		--	--	--	--
Silver	mg/kg	10,000	---	1,000	---		--	--	--	--
Aluminum	mg/kg	1,000,000	1,000,000	200,000	870,000		--	--	--	--
Antimony	mg/kg	820	---	82	---		--	--	--	--
Beryllium	mg/kg	4,100	2,100	410	44,000		--	--	--	--
Calcium	mg/kg	---	---	---	---		--	--	--	--
Cobalt	mg/kg	120,000	---	12,000	---		--	--	--	--
Copper	mg/kg	82,000	---	8,200	---		--	--	--	--
Cyanide	mg/kg	41,000	---	4,100	---		--	--	--	--
Iron	mg/kg	---	---	---	---		--	--	--	--
Magnesium	mg/kg	---	---	730,000	---		--	--	--	--
Manganese	mg/kg	41,000	91,000	4,100	8,700		--	--	--	--
Nickel	mg/kg	41,000	21,000	4,100	440,000		--	--	--	--
Potassium	mg/kg	---	---	---	---		--	--	--	--
Sodium	mg/kg	---	---	---	---		--	--	--	--
Thallium	mg/kg	160	---	160	---		--	--	--	--
Vanadium	mg/kg	14,000	---	1,400	---		--	--	--	--
Zinc	mg/kg	610,000	---	61,000	---		--	--	--	--

Table 4 - Terracon Soil Analytical Results - pH-Specific Constituents
650 West 83rd Street, Chicago, IL
Project Number:A2157000

Analyte	Units	Background	pH-Specific Tier 1 SROs Soil Component to Groundwater Class 1					Sample Identification	B-1 (1-3)	B-1 (4-6)	B-2 (1-3)	B-2 (6-8)	B-3 (1-3)	B-3 (4-6)	B-4 (1-3)
			6.9	7.25	7.75	8.25	8.75	Date Collected	6/27/2013	6/27/2013	6/27/2013	6/27/2013	6/27/2013	6/27/2013	6/27/2013
		Chicago	7.24	7.74	8.24	8.74	9								
pH-Specific Compounds								pH	8.4	11.6	8.4**	11.6**	8.4**	11.6**	8.4**
Arsenic	mg/kg	13	29	30	31	32	33		4.6	3.9	8.4	10	11	**19**	**23**
Barium	mg/kg	110	1,700	1,800	2,100	---	---		100	**140**	**120**	74	**390**	**140**	110
Cadmium	mg/kg	0.6	11	59	430	---	---		**0.75**	< 0.57	**1.3**	< 0.56	**5**	**8.2**	**0.79**
Chromium, total *	mg/kg	16.2	36	32	28	24	21		**24**	6.7	12	12	**18**	13	13
Chromium, ion, hexavalent	mg/kg	---	36	32	28	24	21		--	--	--	--	--	--	--
Lead	mg/kg	36	107	107	107	107	282		**170**	**39**	**370**	19	**550**	**1300**	**290**
Mercury	mg/kg	0.06	3.3	6.4	8.0	---	---		**1.5**	< 0.02	**1.8**	< 0.019	**0.13**	**1**	**0.073**
Selenium	mg/kg	0.48	4.5	3.3	2.4	1.8	1.3		< 1.1	< 1.1	< 1.1	< 1.1	**1.5**	**3**	**1.3**
Silver	mg/kg	0.55	13	39	110	---	---		< 1.1	< 1.1	< 1.1	< 1.1	< 1.2	< 1.5	< 1.2
Aluminum	mg/kg	9,500	---	---	---	---	---		5200	**10000**	--	--	--	--	--
Antimony	mg/kg	4.0	5	5	5	5	5		< 2.3	< 2.3	--	--	--	--	--
Beryllium	mg/kg	0.59	140	1,000	8,000	---	---		**0.72**	**1.1**	--	--	--	--	--
Calcium	mg/kg	9,300	---	---	---	---	---		**160000**	**200000**	--	--	--	--	--
Cobalt	mg/kg	8.9	---	---	---	---	---		3.4	3.1	--	--	--	--	--
Copper	mg/kg	19.6	200,000	330,000	330,000	---	---		**45**	10	--	--	--	--	--
Cyanide	mg/kg	0.51	40	40	40	40	40		< 0.27	< 0.29	--	--	--	--	--
Iron	mg/kg	15,900	---	---	---	---	---		14000	**20000**	--	--	--	--	--
Magnesium	mg/kg	4,820	---	---	---	---	---		**74000**	**53000**	--	--	--	--	--
Manganese	mg/kg	636	---	---	---	---	---		**660**	**1800**	--	--	--	--	--
Nickel	mg/kg	18	180	700	3,800	---	---		12	10	--	--	--	--	--
Potassium	mg/kg	1,268	---	---	---	---	---		820	570	--	--	--	--	--
Sodium	mg/kg	130	---	---	---	---	---		**340**	**250**	--	--	--	--	--
Thallium	mg/kg	0.32	3.0	3.4	3.8	4.4	4.9		< 1.1	< 1.1	--	--	--	--	--
Vanadium	mg/kg	25.2	980	980	980	980	980		**29**	11	--	--	--	--	--
Zinc	mg/kg	95	7,500	16,000	53,000	---	---		**140**	47	--	--	--	--	--

Table 4 - Terracon Soil Analytical Results - pH-Specific Constituents
650 West 83rd Street, Chicago, IL
Project Number:A2157000

Analyte	Units	Background	pH-Specific Tier 1 SROs Soil Component to Groundwater Class 1					Sample Identification	B-4 (4-6)	B-5 (1-3)	B-5 (4-6)	B-6 (1-3)	B-6 (6-8)	B-7 (1-3)	B-7 (4-6)
			6.9	7.25	7.75	8.25	8.75	Date Collected	6/27/2013	6/25/2013	6/25/2013	6/25/2013	6/25/2013	6/27/2013	6/27/2013
		Chicago	7.24	7.74	8.24	8.74	9								
pH-Specific Compounds								pH	11.6**	8.4**	11.6**	8.4**	11.6**	8.3**	8.0**
Arsenic	mg/kg	13	29	30	31	32	33		**18**	**29**	7.1	**16**	4.4	6.1	**15**
Barium	mg/kg	110	1,700	1,800	2,100	—	—		**400**	**2500**	**290**	63	**120**	**220**	**240**
Cadmium	mg/kg	0.6	11	59	430	—	—		**3.8**	**6.6**	< 0.53	0.59	**6.8**	**3.5**	**1.3**
Chromium, total *	mg/kg	16.2	36	32	28	24	21		9.9	**64**	**20**	**22**	12	**52**	13
Chromium, ion, hexavalent	mg/kg	---	36	32	28	24	21		–	<0.48	–	--	--	--	--
Lead	mg/kg	36	107	107	107	107	282		**680**	**3600**	**370**	24	19	**720**	**550**
Mercury	mg/kg	0.06	3.3	6.4	8.0	—	—		**0.27**	**0.65**	**0.078**	< 0.023	< 0.025	**0.094**	**0.72**
Selenium	mg/kg	0.48	4.5	3.3	2.4	1.8	1.3		< 1.2	**1.9**	< 1.1	< 1.1	**1.2**	< 1.2	**2.3**
Silver	mg/kg	0.55	13	39	110	—	—		**1.6**	**2**	< 1.1	< 1.1	< 1.2	< 1.2	< 1.8
Aluminum	mg/kg	9,500	—	—	—	—	—		--	--	–	–	--	--	--
Antimony	mg/kg	4.0	5	5	5	5	5		--	--	--	--	--	–	–
Beryllium	mg/kg	0.59	140	1,000	8,000	---	---		–	–	–	–	--	--	--
Calcium	mg/kg	9,300	—	—	—	—	—		--	--	--	--	--	–	–
Cobalt	mg/kg	8.9	---	---	---	---	---		–	–	--	--	--	--	–
Copper	mg/kg	19.6	200,000	330,000	330,000	---	---		--	--	--	–	–	–	--
Cyanide	mg/kg	0.51	40	40	40	40	40		–	–	--	--	--	--	--
Iron	mg/kg	15,900	—	—	—	---	---		--	--	--	--	--	--	--
Magnesium	mg/kg	4,820	---	---	---	—	—		--	--	--	--	--	–	–
Manganese	mg/kg	636	---	---	---	---	---		–	–	–	–	--	--	--
Nickel	mg/kg	18	180	700	3,800	---	---		--	--	–	--	--	--	--
Potassium	mg/kg	1,268	—	—	—	---	---		--	--	--	--	–	–	–
Sodium	mg/kg	130	---	---	---	—	—		–	–	--	--	--	--	–
Thallium	mg/kg	0.32	3.0	3.4	3.8	4.4	4.9		--	--	–	–	--	--	--
Vanadium	mg/kg	25.2	980	980	980	980	980		--	--	--	--	–	–	–
Zinc	mg/kg	95	7,500	16,000	53,000	—	—		–	–	–	--	--	--	--

Table 4 - Terracon Soil Analytical Results - pH-Specific Constituents
650 West 83rd Street, Chicago, IL
Project Number:A2157000

Analyte	Units	Background	pH-Specific Tier 1 SROs Soil Component to Groundwater Class 1					Sample Identification	B-8 (1-3)	B-8 (4-6)	B-9 (1-3)	B-9 (4-6)	B-10 (1-3)	B-10 (4-6)	B-11 (1-3)
			6.9	7.25	7.75	8.25	8.75	Date Collected	6/26/2013	6/26/2013	6/26/2013	6/26/2013	6/25/2013	6/25/2013	6/27/2013
		Chicago	7.24	7.74	8.24	8.74	9								
pH-Specific Compounds								pH	8.3	8	8.3**	8.0**	8.3**	8.4**	8.3**
Arsenic	mg/kg	13	29	30	31	32	33		4.8	7.2	6.6	7.2	11	7.2	13
Barium	mg/kg	110	1,700	1,800	2,100	—	—		**120**	**230**	**490**	**230**	41	80	**920**
Cadmium	mg/kg	0.6	11	59	430	—	—		< 0.61	**1.2**	< 0.58	**1.1**	< 0.55	< 0.61	**3.1**
Chromium, total *	mg/kg	16.2	36	32	28	24	21		13	15	13	**18**	**17**	**17**	14
Chromium, ion, hexavalent	mg/kg	---	36	32	28	24	21		--	--	--	--	--	--	--
Lead	mg/kg	36	107	107	107	107	282		**130**	**57**	**64**	**140**	31	**76**	**33000**
Mercury	mg/kg	0.06	3.3	6.4	8.0	—	—		< 0.023	0.038	0.041	**0.34**	0.026	**0.5**	< 0.024
Selenium	mg/kg	0.48	4.5	3.3	2.4	1.8	1.3		< 1.2	< 1.2	< 1.2	< 1.5	< 1.1	< 1.2	**1.4**
Silver	mg/kg	0.55	13	39	110	---	---		< 1.2	< 1.2	< 1.2	< 1.5	< 1.1	< 1.2	< 1.1
Aluminum	mg/kg	9,500	---	---	---	---	---		--	8500	--	--	--	--	--
Antimony	mg/kg	4.0	5	5	5	5	5		--	< 2.4	--	--	--	--	--
Beryllium	mg/kg	0.59	140	1,000	8,000	---	---		--	**2.5**	--	--	--	--	--
Calcium	mg/kg	9,300	—	—	—	—	—		--	**24000**	--	--	--	--	--
Cobalt	mg/kg	8.9	---	---	---	---	---		--	5.7	--	--	--	--	--
Copper	mg/kg	19.6	200,000	330,000	330,000	—	—		--	**20**	--	--	--	--	--
Cyanide	mg/kg	0.51	40	40	40	40	40		--	< 0.33	--	--	--	--	--
Iron	mg/kg	15,900	—	—	—	—	—		--	**24000**	--	--	--	--	--
Magnesium	mg/kg	4,820	---	---	---	---	---		--	**8400**	--	--	--	--	--
Manganese	mg/kg	636	—	—	—	—	—		--	230	--	--	--	--	--
Nickel	mg/kg	18	180	700	3,800	—	—		--	**20**	--	--	--	--	--
Potassium	mg/kg	1,268	---	---	---	---	---		--	970	--	--	--	--	--
Sodium	mg/kg	130	—	—	—	—	—		--	**540**	--	--	--	--	--
Thallium	mg/kg	0.32	3.0	3.4	3.8	4.4	4.9		--	< 1.2	--	--	--	--	--
Vanadium	mg/kg	25.2	980	980	980	980	980		--	**28**	--	--	--	--	--
Zinc	mg/kg	95	7,500	16,000	53,000	---	---		--	**110**	--	--	--	--	--

Table 4 - Terracon Soil Analytical Results - pH-Specific Constituents
650 West 83rd Street, Chicago, IL
Project Number:A2157000

Analyte	Units	Background	pH-Specific Tier 1 SROs Soil Component to Groundwater					Sample Identification	B-11 (4-6)	B-12 (1-3)	B-12 (4-6)	B-13 (1-3)	B-13 (4-6)	B-14 (1-3)	B-14 (6-8)
			Class 1												
			6.9	7.25	7.75	8.25	8.75	Date Collected	6/27/2013	6/28/2013	6/28/2013	6/28/2013	6/28/2013	6/27/2013	6/27/2013
		Chicago	7.24	7.74	8.24	8.74	9								
pH-Specific Compounds								pH	8.4	8	7.9	8.0**	7.9**	8.0**	7.9**
Arsenic	mg/kg	13	29	30	31	32	33		3.6	12	7.7	**19**	7.4	3.4	12
Barium	mg/kg	110	1,700	1,800	2,100	---	---		55	86	63	**200**	**260**	21	**140**
Cadmium	mg/kg	0.6	11	59	430	—	—		< 0.58	**1.3**	< 0.63	**1.6**	< 1.3	< 0.53	< 0.54
Chromium, total *	mg/kg	16.2	36	32	28	24	21		7.8	**18**	**19**	13	7.1	4.5	**17**
Chromium, ion, hexavalent	mg/kg	---	36	32	28	24	21		--	--	--	--	--	--	--
Lead	mg/kg	36	107	107	107	107	282		**320**	**140**	**42**	**340**	**1000**	**58**	**350**
Mercury	mg/kg	0.06	3.3	6.4	8.0	---	---		< 0.019	**0.73**	**0.63**	< 0.021	< 0.024	0.039	**0.18**
Selenium	mg/kg	0.48	4.5	3.3	2.4	1.8	1.3		< 1.2	< 1.2	< 1.3	< 2.3	< 2.6	< 1.1	< 1.1
Silver	mg/kg	0.55	13	39	110	—	—		< 1.2	< 1.2	< 1.3	< 2.3	< 2.6	< 1.1	< 1.1
Aluminum	mg/kg	9,500	---	---	---	---	---		3500	--	--	--	--	--	--
Antimony	mg/kg	4.0	5	5	5	5	5		< 2.3	--	--	--	--	--	--
Beryllium	mg/kg	0.59	140	1,000	8,000	---	---		**0.65**	--	--	--	--	--	--
Calcium	mg/kg	9,300	—	—	—	—	—		**86000**	--	--	--	--	--	--
Cobalt	mg/kg	8.9	---	---	---	---	---		5.7	--	--	--	--	--	--
Copper	mg/kg	19.6	200,000	330,000	330,000	---	---		7.2	--	--	--	--	--	--
Cyanide	mg/kg	0.51	40	40	40	40	40		< 0.31	--	--	--	--	--	--
Iron	mg/kg	15,900	---	---	---	---	---		12000	--	--	--	--	--	--
Magnesium	mg/kg	4,820	—	—	—	—	—		**29000**	--	--	--	--	--	--
Manganese	mg/kg	636	---	---	---	---	---		390	--	--	--	--	--	--
Nickel	mg/kg	18	180	700	3,800	---	---		11	--	--	--	--	--	--
Potassium	mg/kg	1,268	—	—	—	—	—		390	--	--	--	--	--	--
Sodium	mg/kg	130	---	---	---	---	---		**290**	--	--	--	--	--	--
Thallium	mg/kg	0.32	3.0	3.4	3.8	4.4	4.9		< 1.2	--	--	--	--	--	--
Vanadium	mg/kg	25.2	980	980	980	980	980		15	--	--	--	--	--	--
Zinc	mg/kg	95	7,500	16,000	53,000	—	—		70	--	--	--	--	--	--

Table 4 - Terracon Soil Analytical Results - pH-Specific Constituents
650 West 83rd Street, Chicago, IL
Project Number:A2157000

Analyte	Units	Background	pH-Specific Tier 1 SROs Soil Component to Groundwater Class 1					Sample Identification	B-15 (1-3)	B-15 (4-6)	B-16 (1-3)	B-16 (4-6)	B-17 (1-3)	B-17 (4-6)	B-18 (1-3)
			6.9	7.25	7.75	8.25	8.75	Date Collected	6/27/2013	6/27/2013	6/27/2013	6/27/2013	6/26/2013	6/26/2013	6/26/2013
		Chicago	7.24	7.74	8.24	8.74	9								
pH-Specific Compounds								pH	8.0**	8.5	8.9	7.1	8.9**	7.1**	8.9**
Arsenic	mg/kg	13	29	30	31	32	33		4	4.4	7.8	**23**	**14**	**31**	8.1
Barium	mg/kg	110	1,700	1,800	2,100	—	—		**180**	130	92	**1000**	**880**	**560**	**1500**
Cadmium	mg/kg	0.6	11	59	430	—	—		< 0.54	< 0.52	< 0.5	**2.3**	**3.2**	**2.4**	**0.82**
Chromium, total *	mg/kg	16.2	36	32	28	24	21		14	10	**26**	**17**	**35**	**30**	**23**
Chromium, ion, hexavalent	mg/kg	—	36	32	28	24	21		--	--	--	--	--	--	--
Lead	mg/kg	36	107	107	107	107	282		**240**	13	**120**	**7700**	**1200**	**890**	**150**
Mercury	mg/kg	0.06	3.3	6.4	8.0	—	—		0.054	< 0.017	0.024	**0.13**	**0.2**	**0.17**	**0.096**
Selenium	mg/kg	0.48	4.5	3.3	2.4	1.8	1.3		< 1.1	< 1	< 1	**1.4**	< 1.1	**2.3**	< 1.1
Silver	mg/kg	0.55	13	39	110	—	—		< 1.1	< 1	< 1	< 1.4	**1.7**	< 1.5	< 1.1
Aluminum	mg/kg	9,500	—	—	—	—	—		--	--	**13000**	9400	--	--	--
Antimony	mg/kg	4.0	5	5	5	5	5		--	--	< 2	**630**	--	--	--
Beryllium	mg/kg	0.59	140	1,000	8,000	—	—		--	--	**0.86**	**2.6**	--	--	--
Calcium	mg/kg	9,300	—	—	—	—	—		--	--	**48000**	**15000**	--	--	--
Cobalt	mg/kg	8.9	—	—	—	—	—		--	--	**14**	7.3	--	--	--
Copper	mg/kg	19.6	200,000	330,000	330,000	—	—		--	--	**41**	**90**	--	--	--
Cyanide	mg/kg	0.51	40	40	40	40	40		--	--	< 0.29	< 0.34	--	--	--
Iron	mg/kg	15,900	—	—	—	—	—		--	--	**29000**	**36000**	--	--	--
Magnesium	mg/kg	4,820	—	—	—	—	—		--	--	**23000**	3900	--	--	--
Manganese	mg/kg	636	—	—	—	—	—		--	--	460	440	--	--	--
Nickel	mg/kg	18	180	700	3,800	—	—		--	--	**36**	**36**	--	--	--
Potassium	mg/kg	1,268	—	—	—	—	—		--	--	**2100**	**2200**	--	--	--
Sodium	mg/kg	130	—	—	—	—	—		--	--	**670**	**1400**	--	--	--
Thallium	mg/kg	0.32	3.0	3.4	3.8	4.4	4.9		--	--	< 1	< 1.4	--	--	--
Vanadium	mg/kg	25.2	980	980	980	980	980		--	--	24	**42**	--	--	--
Zinc	mg/kg	95	7,500	16,000	53,000	—	—		--	--	78	**380**	--	--	--

Table 4 - Terracon Soil Analytical Results - pH-Specific Constituents
650 West 83rd Street, Chicago, IL
Project Number:A2157000

Analyte	Units	Background	pH-Specific Tier 1 SROs Soil Component to Groundwater					Sample Identification	B-18 (4-6)	B-19 (1-3)	B-19 (4-6)	B-20 (1-3)	B-20 (4-6)	B-21 (1-3)	B-21 (4-6)
			Class 1												
			6.9	7.25	7.75	8.25	8.75	Date Collected	6/26/2013	6/26/2013	6/26/2013	6/27/2013	6/27/2013	6/27/2013	6/27/2013
		Chicago	7.24	7.74	8.24	8.74	9								
pH-Specific Compounds								pH	7.1**	8.1**	7.1**	8.1	8.4**	8.1**	8.4**
Arsenic	mg/kg	13	29	30	31	32	33		3.3	7.3	1.9	7.9	8.7	5.6	2.2
Barium	mg/kg	110	1,700	1,800	2,100	—	—		69	**130**	42	**120**	90	**180**	18
Cadmium	mg/kg	0.6	11	59	430	—	—		< 0.63	**0.7**	< 0.7	**0.84**	**3**	**1.1**	< 0.64
Chromium, total *	mg/kg	16.2	36	32	28	24	21		7.9	12	9.6	13	12	10	7.4
Chromium, ion, hexavalent	mg/kg	—	36	32	28	24	21		--	--	--	--	--	--	--
Lead	mg/kg	36	107	107	107	107	282		**310**	**150**	11	**180**	31	12	6.1
Mercury	mg/kg	0.06	3.3	6.4	8.0	—	—		0.053	**0.086**	< 0.025	< 0.022	< 0.026	< 0.023	< 0.024
Selenium	mg/kg	0.48	4.5	3.3	2.4	1.8	1.3		< 1.3	< 1.1	< 1.4	< 1.3	**1.7**	< 1.2	< 1.3
Silver	mg/kg	0.55	13	39	110	—	—		< 1.3	< 1.1	< 1.4	< 1.3	< 1.4	< 1.2	< 1.3
Aluminum	mg/kg	9,500	—	—	—	—	—		--	--	--	6500	--	--	--
Antimony	mg/kg	4.0	5	5	5	5	5		--	--	--	< 2.6	--	--	--
Beryllium	mg/kg	0.59	140	1,000	8,000	—	—		--	--	--	**1**	--	--	--
Calcium	mg/kg	9,300	—	—	—	—	—		--	--	--	**57000**	--	--	--
Cobalt	mg/kg	8.9	—	—	—	—	—		--	--	--	7.8	--	--	--
Copper	mg/kg	19.6	200,000	330,000	330,000	—	—		--	--	--	**25**	--	--	--
Cyanide	mg/kg	0.51	40	40	40	40	40		--	--	--	< 0.31	--	--	--
Iron	mg/kg	15,900	—	—	—	—	—		--	--	--	**20000**	--	--	--
Magnesium	mg/kg	4,820	—	—	—	—	—		--	--	--	**20000**	--	--	--
Manganese	mg/kg	636	—	—	—	—	—		--	--	--	370	--	--	--
Nickel	mg/kg	18	180	700	3,800	—	—		--	--	--	**20**	--	--	--
Potassium	mg/kg	1,268	—	—	—	—	—		--	--	--	1000	--	--	--
Sodium	mg/kg	130	—	—	—	—	—		--	--	--	**270**	--	--	--
Thallium	mg/kg	0.32	3.0	3.4	3.8	4.4	4.9		--	--	--	< 1.3	--	--	--
Vanadium	mg/kg	25.2	980	980	980	980	980		--	--	--	24	--	--	--
Zinc	mg/kg	95	7,500	16,000	53,000	—	—		--	--	--	**120**	--	--	--

Table 4 - Terracon Soil Analytical Results - pH-Specific Constituents
650 West 83rd Street, Chicago, IL
Project Number:A2157000

Analyte	Units	Background	pH-Specific Tier 1 SROs Soil Component to Groundwater Class 1					Sample Identification	B-24 (1-3)	B-24 (6-8)	B-25 (1-3)	B-25 (4-6)	B-26 (1-3)	B-26 (6-8)	B-27 (1-3)
			6.9	7.25	7.75	8.25	8.75	Date Collected	6/27/2013	6/27/2013	6/26/2013	6/26/2013	6/26/2013	6/26/2013	6/26/2013
		Chicago	7.24	7.74	8.24	8.74	9								
pH-Specific Compounds								pH	7.5**	7.5**	8.3**	7.5**	9.2**	7.5**	9.2**
Arsenic	mg/kg	13	29	30	31	32	33		4.4	7.5	11	6.5	**27**	7.3	**19**
Barium	mg/kg	110	1,700	1,800	2,100	—	—		73	71	**120**	**530**	**300**	47	**350**
Cadmium	mg/kg	0.6	11	59	430	---	---		**0.88**	< 0.77	< 0.61	**1.4**	**2.1**	< 0.55	**2.3**
Chromium, total *	mg/kg	16.2	36	32	28	24	21		8.8	10	15	**18**	**18**	16	**23**
Chromium, ion, hexavalent	mg/kg	---	36	32	28	24	21		--	--	--	--	--	--	--
Lead	mg/kg	36	107	107	107	107	282		**160**	**38**	**150**	**180**	**600**	18	**790**
Mercury	mg/kg	0.06	3.3	6.4	8.0	—	—		**0.19**	0.051	**0.17**	0.046	**0.36**	< 0.023	**0.47**
Selenium	mg/kg	0.48	4.5	3.3	2.4	1.8	1.3		< 1	**1.7**	< 1.2	< 1.3	**1.6**	< 1.1	**1.2**
Silver	mg/kg	0.55	13	39	110	—	—		< 1	< 1.5	< 1.2	< 1.3	< 1.1	< 1.1	< 1.2
Aluminum	mg/kg	9,500	---	---	---	---	---		--	--	--	--	--	--	--
Antimony	mg/kg	4.0	5	5	5	5	5		--	--	--	--	--	--	--
Beryllium	mg/kg	0.59	140	1,000	8,000	---	---		--	--	--	--	--	--	--
Calcium	mg/kg	9,300	—	—	—	—	—		--	--	--	--	--	--	--
Cobalt	mg/kg	8.9	—	—	—	—	—		--	--	--	--	--	--	--
Copper	mg/kg	19.6	200,000	330,000	330,000	—	—		--	--	--	--	--	--	--
Cyanide	mg/kg	0.51	40	40	40	40	40		--	--	--	--	--	--	--
Iron	mg/kg	15,900	—	—	—	—	—		--	--	--	--	--	--	--
Magnesium	mg/kg	4,820	---	---	—	—	—		--	--	--	--	--	--	--
Manganese	mg/kg	636	—	—	—	—	—		--	--	--	--	--	--	--
Nickel	mg/kg	18	180	700	3,800	—	—		--	--	--	--	--	--	--
Potassium	mg/kg	1,268	---	---	---	---	---		--	--	--	--	--	--	--
Sodium	mg/kg	130	—	—	—	—	—		--	--	--	--	--	--	--
Thallium	mg/kg	0.32	3.0	3.4	3.8	4.4	4.9		--	--	--	--	--	--	--
Vanadium	mg/kg	25.2	980	980	980	980	980		--	--	--	--	--	--	--
Zinc	mg/kg	95	7,500	16,000	53,000	---	---		--	--	--	--	--	--	--

Table 4 - Terracon Soil Analytical Results - pH-Specific Constituents
650 West 83rd Street, Chicago, IL
Project Number:A2157000

Analyte	Units	Background	pH-Specific Tier 1 SROs Soil Component to Groundwater Class 1					Sample Identification	B-27 (6-8)	B-28 (1-3)	B-28 (4-6)	B-29 (1-3)	B-29 (4-6)	B-30 (1-3)	B-30 (4-6)
			6.9	7.25	7.75	8.25	8.75	Date Collected	6/26/2013	6/28/2013	6/28/2013	6/28/2013	6/28/2013	6/28/2013	6/28/2013
		Chicago	7.24	7.74	8.24	8.74	9								
pH-Specific Compounds								pH	7.5**	7.5**	7.9**	7.5	7.9**	8.3**	7.5**
Arsenic	mg/kg	13	29	30	31	32	33		13	8.4	11	12	**15**	5.6	**15**
Barium	mg/kg	110	1,700	1,800	2,100	---	---		**340**	**360**	24	**230**	**170**	12	62
Cadmium	mg/kg	0.6	11	59	430	---	---		**4.3**	**1.2**	< 0.55	**1**	< 0.54	< 0.68	< 0.62
Chromium, total *	mg/kg	16.2	36	32	28	24	21		**40**	12	7.6	14	6.9	8.4	**17**
Chromium, ion, hexavalent	mg/kg	---	36	32	28	24	21		--	--	--	--	--	--	--
Lead	mg/kg	36	107	107	107	107	282		**620**	**510**	14	**430**	**140**	13	**67**
Mercury	mg/kg	0.06	3.3	6.4	8.0	---	---		**0.38**	**0.31**	0.032	**0.14**	< 0.023	< 0.024	**0.32**
Selenium	mg/kg	0.48	4.5	3.3	2.4	1.8	1.3		< 1.4	< 1.1	< 1.1	< 1.2	< 1.1	< 1.4	< 1.2
Silver	mg/kg	0.55	13	39	110	---	---		**1.4**	< 1.1	< 1.1	< 1.2	< 1.1	< 1.4	< 1.2
Aluminum	mg/kg	9,500	---	---	---	---	---		--	--	--	--	--	--	--
Antimony	mg/kg	4.0	5	5	5	5	5		--	--	--	--	--	--	--
Beryllium	mg/kg	0.59	140	1,000	8,000	---	---		--	--	--	--	--	--	--
Calcium	mg/kg	9,300	---	---	---	---	---		--	--	--	--	--	--	--
Cobalt	mg/kg	8.9	---	---	---	---	---		--	--	--	--	--	--	--
Copper	mg/kg	19.6	200,000	330,000	330,000	---	---		--	--	--	--	--	--	--
Cyanide	mg/kg	0.51	40	40	40	40	40		--	--	--	--	--	--	--
Iron	mg/kg	15,900	---	---	---	---	---		--	--	--	--	--	--	--
Magnesium	mg/kg	4,820	---	---	---	---	---		--	--	--	--	--	--	--
Manganese	mg/kg	636	---	---	---	---	---		--	--	--	--	--	--	--
Nickel	mg/kg	18	180	700	3,800	---	---		--	--	--	--	--	--	--
Potassium	mg/kg	1,268	---	---	---	---	---		--	--	--	--	--	--	--
Sodium	mg/kg	130	---	---	---	---	---		--	--	--	--	--	--	--
Thallium	mg/kg	0.32	3.0	3.4	3.8	4.4	4.9		--	--	--	--	--	--	--
Vanadium	mg/kg	25.2	980	980	980	980	980		--	--	--	--	--	--	--
Zinc	mg/kg	95	7,500	16,000	53,000	---	---		--	--	--	--	--	--	--

Table 4 - Terracon Soil Analytical Results - pH-Specific Constituents
650 West 83rd Street, Chicago, IL
Project Number:A2157000

Analyte	Units	Background	pH-Specific Tier 1 SROs Soil Component to Groundwater					Sample Identification	B-31 (1-3)	B-31 (6-8)	B-32 (1-3)	B-32 (6-8)	B-33 (1-3)	B-33 (4-6)	B-34 (1-3)
			Class 1												
			6.9	7.25	7.75	8.25	8.75	Date Collected	6/27/2013	6/27/2013	6/26/2013	6/26/2013	6/26/2013	6/26/2013	6/25/2013
		Chicago	7.24	7.74	8.24	8.74	9								
pH-Specific Compounds								pH	8.3	7.5	8.3**	7.5**	8.3**	7.5**	9.2
Arsenic	mg/kg	13	29	30	31	32	33		7.1	6.2	8.8	6.8	6.3	6.4	6.3
Barium	mg/kg	110	1,700	1,800	2,100	---	---		100	50	**200**	110	64	110	**170**
Cadmium	mg/kg	0.6	11	59	430	---	---		**1**	**0.65**	**0.81**	< 0.9	0.52	< 0.64	**0.68**
Chromium, total *	mg/kg	16.2	36	32	28	24	21		12	13	16	**28**	**17**	9.8	14
Chromium, ion, hexavalent	mg/kg	---	36	32	28	24	21		--	--	--	--	--	--	--
Lead	mg/kg	36	107	107	107	107	282		**370**	24	**260**	29	**110**	**44**	**100**
Mercury	mg/kg	0.06	3.3	6.4	8.0	---	---		**0.12**	0.025	**0.12**	0.039	0.054	**0.14**	**0.42**
Selenium	mg/kg	0.48	4.5	3.3	2.4	1.8	1.3		< 1	< 1.3	< 1.1	< 1.8	< 1	< 1.3	< 1.2
Silver	mg/kg	0.55	13	39	110	---	---		< 1	< 1.3	< 1.1	< 1.8	< 1	< 1.3	< 1.2
Aluminum	mg/kg	9,500	---	---	---	---	---		--	--	--	--	--	--	8600
Antimony	mg/kg	4.0	5	5	5	5	5		--	--	--	--	--	--	< 2.3
Beryllium	mg/kg	0.59	140	1,000	8,000	---	---		--	--	--	--	--	--	**1.9**
Calcium	mg/kg	9,300	---	---	---	---	---		--	--	--	--	--	--	**33000**
Cobalt	mg/kg	8.9	---	---	---	---	---		--	--	--	--	--	--	6.7
Copper	mg/kg	19.6	200,000	330,000	330,000	---	---		--	--	--	--	--	--	**32**
Cyanide	mg/kg	0.51	40	40	40	40	40		--	--	--	--	--	--	< 0.3
Iron	mg/kg	15,900	---	---	---	---	---		--	--	--	--	--	--	**19000**
Magnesium	mg/kg	4,820	---	---	---	---	---		--	--	--	--	--	--	**15000**
Manganese	mg/kg	636	---	---	---	---	---		--	--	--	--	--	--	290
Nickel	mg/kg	18	180	700	3,800	---	---		--	--	--	--	--	--	**32**
Potassium	mg/kg	1,268	---	---	---	---	---		--	--	--	--	--	--	990
Sodium	mg/kg	130	---	---	---	---	---		--	--	--	--	--	--	**1100**
Thallium	mg/kg	0.32	3.0	3.4	3.8	4.4	4.9		--	--	--	--	--	--	< 1.2
Vanadium	mg/kg	25.2	980	980	980	980	980		--	--	--	--	--	--	**30**
Zinc	mg/kg	95	7,500	16,000	53,000	---	---		--	--	--	--	--	--	**140**

Table 4 - Terracon Soil Analytical Results - pH-Specific Constituents
650 West 83rd Street, Chicago, IL
Project Number:A2157000

Analyte	Units	Background	pH-Specific Tier 1 SROs Soil Component to Groundwater Class 1					Sample Identification	B-34 (4-6)	B-35 (1-3)	B-35 (4-6)	B-36 (1-3)	B-36 (4-6)	B-37 (1-3)	B-37 (6-8)
			6.9	7.25	7.75	8.25	8.75	Date Collected	6/25/2013	6/26/2013	6/26/2013	6/26/2013	6/26/2013	6/27/2013	6/27/2013
		Chicago	7.24	7.74	8.24	8.74	9								
pH-Specific Compounds								pH	7.5**	9.2**	7.5**	9.2**	7.5**	9.2**	7.5**
Arsenic	mg/kg	13	29	30	31	32	33		2.4	**16**	**24**	9.5	11	5.5	5.6
Barium	mg/kg	110	1,700	1,800	2,100	---	---		45	**660**	**1000**	**4000**	74	**140**	66
Cadmium	mg/kg	0.6	11	59	430	—	—		< 0.63	**2.5**	**6.6**	**1.9**	< 0.55	**1.2**	< 0.59
Chromium, total *	mg/kg	16.2	36	32	28	24	21		13	**24**	**39**	**19**	**19**	**19**	14
Chromium, ion, hexavalent	mg/kg	---	36	32	28	24	21		--	--	--	--	--	--	--
Lead	mg/kg	36	107	107	107	107	282		19	**680**	**920**	**160**	19	**190**	**330**
Mercury	mg/kg	0.06	3.3	6.4	8.0	---	---		< 0.02	**0.75**	**1.5**	**0.098**	0.027	**0.17**	**0.21**
Selenium	mg/kg	0.48	4.5	3.3	2.4	1.8	1.3		< 1.3	< 1.2	< 1.5	< 1.1	< 1.1	< 1.1	< 1.2
Silver	mg/kg	0.55	13	39	110	—	—		< 1.3	< 1.2	**2.7**	< 1.1	< 1.1	< 1.1	< 1.2
Aluminum	mg/kg	9,500	---	---	---	---	---		--	--	--	--	--	--	--
Antimony	mg/kg	4.0	5	5	5	5	5		—	—	—	—	--	--	--
Beryllium	mg/kg	0.59	140	1,000	8,000	---	---		--	--	—	—	—	—	—
Calcium	mg/kg	9,300	—	—	—	---	---		--	--	--	--	--	--	--
Cobalt	mg/kg	8.9	---	---	—	—	—		—	—	—	--	--	--	--
Copper	mg/kg	19.6	200,000	330,000	330,000	---	---		--	--	—	—	--	—	—
Cyanide	mg/kg	0.51	40	40	40	40	40		—	—	--	--	--	--	--
Iron	mg/kg	15,900	---	---	---	---	---		--	--	—	—	—	—	—
Magnesium	mg/kg	4,820	—	—	---	---	---		--	--	--	--	--	--	--
Manganese	mg/kg	636	---	---	—	—	—		—	—	—	—	—	—	—
Nickel	mg/kg	18	180	700	3,800	---	—		—	—	—	—	—	—	—
Potassium	mg/kg	1,268	—	—	---	---	---		--	--	--	--	--	--	--
Sodium	mg/kg	130	---	---	—	—	—		—	—	—	—	--	--	--
Thallium	mg/kg	0.32	3.0	3.4	3.8	4.4	4.9		--	--	--	--	--	—	—
Vanadium	mg/kg	25.2	980	980	980	980	980		--	--	--	--	--	--	--
Zinc	mg/kg	95	7,500	16,000	53,000	---	---		—	—	—	—	—	—	—

Table 4 - Terracon Soil Analytical Results - pH-Specific Constituents
650 West 83rd Street, Chicago, IL
Project Number:A2157000

Analyte	Units	Background	pH-Specific Tier 1 SROs Soil Component to Groundwater Class 1					Sample Identification	B-119 (1-3)	B-119 (6-8)	B-122 (4-6)	B-123 (4-6)
			6.9	7.25	7.75	8.25	8.75	Date Collected	9/27/2013	9/27/2013	9/26/2013	9/26/2013
		Chicago	7.24	7.74	8.24	8.74	9					
pH-Specific Compounds								pH	7.5	8.6	7.9**	7.9**
Arsenic	mg/kg	13	29	30	31	32	33		--	--	13	8.2
Barium	mg/kg	110	1,700	1,800	2,100	---	---		--	--	--	--
Cadmium	mg/kg	0.6	11	59	430	---	---		--	--	--	--
Chromium, total *	mg/kg	16.2	36	32	28	24	21		--	--	--	--
Chromium, ion, hexavalent	mg/kg	---	36	32	28	24	21		--	--	--	--
Lead	mg/kg	36	107	107	107	107	282		**990**	14	--	--
Mercury	mg/kg	0.06	3.3	6.4	8.0	---	---		--	--	--	--
Selenium	mg/kg	0.48	4.5	3.3	2.4	1.8	1.3		--	--	--	--
Silver	mg/kg	0.55	13	39	110	---	---		--	--	--	--
Aluminum	mg/kg	9,500	---	---	---	---	---		--	--	--	--
Antimony	mg/kg	4.0	5	5	5	5	5		--	--	--	--
Beryllium	mg/kg	0.59	140	1,000	8,000	---	---		--	--	--	--
Calcium	mg/kg	9,300	---	---	---	---	---		--	--	--	--
Cobalt	mg/kg	8.9	---	---	---	---	---		--	--	--	--
Copper	mg/kg	19.6	200,000	330,000	330,000	---	---		--	--	--	--
Cyanide	mg/kg	0.51	40	40	40	40	40		--	--	--	--
Iron	mg/kg	15,900	---	---	---	---	---		--	--	--	--
Magnesium	mg/kg	4,820	---	---	---	---	---		--	--	--	--
Manganese	mg/kg	636	---	---	---	---	---		--	--	--	--
Nickel	mg/kg	18	180	700	3,800	---	---		--	--	--	--
Potassium	mg/kg	1,268	---	---	---	---	---		--	--	--	--
Sodium	mg/kg	130	---	---	---	---	---		--	--	--	--
Thallium	mg/kg	0.32	3.0	3.4	3.8	4.4	4.9		--	--	--	--
Vanadium	mg/kg	25.2	980	980	980	980	980		--	--	--	--
Zinc	mg/kg	95	7,500	16,000	53,000	---	---		--	--	--	--

Table 5 - Terracon Soil Analytical Results - Pesticides/PCBs
650 West 83rd Street, Chicago, IL
Project Number:A2157000

Analyte	Units	IEPA Tier 1 Soil Remediation Objectives					Sample Identification	B-1 (1-3)	B-1 (4-6)	B-8 (4-6)	B-11 (4-6)
		Industrial/Commercial Properties		Construction Workers		Soil Component of the Groundwater Ingestion Route	Sample Depth (feet)	1' - 3'	4' - 6'	4' - 6'	4' - 6'
		Ingestion	Inhalation	Ingestion	Inhalation	Class I	Date Collected	6/27/2013	6/27/2013	6/26/2013	6/27/2013
Pesticide and Aroclors Organic Analytical Parameters											
Aldrin	mg/kg	*0.94*	6.6	6.1	9.3	*0.94*		< 0.0017	< 0.0019	< 0.0021	< 0.002
alpha-BHC	mg/kg	0.9	1.5	20	2.1	*0.0074*		< 0.0017	< 0.0019	< 0.0021	< 0.002
alpha-Chlordane	mg/kg	16	140	100	22	10		< 0.0017	< 0.0019	< 0.0021	< 0.002
beta-BHC	mg/kg	—	—	—	—	—		< 0.0017	< 0.0019	< 0.0021	< 0.002
delta-BHC	mg/kg	—	—	—	—	—		< 0.0017	< 0.0019	< 0.0021	< 0.002
Dieldrin	mg/kg	*0.603*	2.2	7.8	3.1	*0.603*		< 0.0017	< 0.0019	< 0.0021	< 0.002
4,4'-DDD	mg/kg	24	—	520	—	16		< 0.0017	< 0.0019	< 0.0021	< 0.002
4,4'-DDE	mg/kg	17	—	370	—	54		< 0.0017	< 0.0019	< 0.0021	< 0.002
4,4'-DDT	mg/kg	17	1,500	100	2,100	32		< 0.0017	< 0.0019	< 0.0021	< 0.002
Endosulfan I	mg/kg	12,000	—	1,200	—	18		< 0.0017	< 0.0019	< 0.0021	< 0.002
Endosulfan II	mg/kg	12,000	—	1,200	—	18		< 0.0017	< 0.0019	< 0.0021	< 0.002
Endosulfan sulfate	mg/kg	12,000	—	1,200	—	18		< 0.0017	< 0.0019	< 0.0021	< 0.002
Endrin	mg/kg	610	—	61	—	1.0		< 0.0017	< 0.0019	< 0.0021	< 0.002
Endrin aldehyde	mg/kg	610	—	61	—	1.0		< 0.0017	< 0.0019	< 0.0021	< 0.002
Endrin ketone	mg/kg	610	—	61	—	1.0		< 0.0017	< 0.0019	< 0.0021	< 0.002
gamma-BHC	mg/kg	4.0	—	96	—	0.009		< 0.0017	< 0.0019	< 0.0021	< 0.002
gamma-Chlordane	mg/kg	16	140	100	22	10		< 0.0017	< 0.0019	< 0.0021	< 0.002
Heptachlor	mg/kg	1.0	11	28	16	23		< 0.0017	< 0.0019	< 0.0021	< 0.002
Heptachlor epoxide	mg/kg	1.0	9.2	2.7	13	1.0		< 0.0017	< 0.0019	< 0.0021	< 0.002
Methoxychlor	mg/kg	10,000	—	1,000	—	160		< 0.0017	< 0.0019	< 0.0021	< 0.002
Toxaphene	mg/kg	5.2	170	110	240	31		< 0.036	< 0.038	< 0.044	< 0.04
Aroclor - 1016	mg/kg	—	—	—	—	—		< 0.085	< 0.092	< 0.11	< 0.097
Aroclor - 1221	mg/kg	—	—	—	—	—		< 0.085	< 0.092	< 0.11	< 0.097
Aroclor - 1232	mg/kg	—	—	—	—	—		< 0.085	< 0.092	< 0.11	< 0.097
Aroclor - 1242	mg/kg	—	—	—	—	—		< 0.085	< 0.092	< 0.11	< 0.097
Aroclor - 1248	mg/kg	—	—	—	—	—		< 0.085	< 0.092	< 0.11	< 0.097
Aroclor - 1254	mg/kg	—	—	—	—	—		< 0.085	< 0.092	< 0.11	< 0.097
Aroclor - 1260	mg/kg	—	—	—	—	—		< 0.085	< 0.092	< 0.11	< 0.097
Polychlorinated Biphenyls (PCBs)	mg/kg	1.0	—	1.0	—	—		< 0.085	< 0.092	< 0.11	< 0.097

Table 5 - Terracon Soil Analytical Results - Pesticides/PCBs
650 West 83rd Street, Chicago, IL
Project Number:A2157000

Analyte	Units	IEPA Tier 1 Soil Remediation Objectives					Sample Identification	B-16 (1-3)	B-16 (4-6)	B-20 (1-3)	B-34 (1-3)
		Industrial/Commercial Properties		Construction Workers		Soil Component of the Groundwater Ingestion Route	Sample Depth (feet)	1' - 3'	4' - 6'	1' - 3'	1' - 3'
		Ingestion	Inhalation	Ingestion	Inhalation	Class I	Date Collected	6/27/2013	6/27/2013	6/27/2013	6/25/2013
Pesticide and Aroclors Organic Analytical Parameters											
Aldrin	mg/kg	*0.94*	6.6	6.1	9.3	*0.94*		< 0.0018	< 0.0022	< 0.002	< 0.0019
alpha-BHC	mg/kg	0.9	1.5	20	2.1	*0.0074*		< 0.0018	< 0.0022	< 0.002	< 0.0019
alpha-Chlordane	mg/kg	16	140	100	22	10		< 0.0018	< 0.0022	< 0.002	< 0.0019
beta-BHC	mg/kg	—	—	—	—	—		< 0.0018	< 0.0022	< 0.002	< 0.0019
delta-BHC	mg/kg	—	—	—	—	—		< 0.0018	< 0.0022	< 0.002	< 0.0019
Dieldrin	mg/kg	*0.603*	2.2	7.8	3.1	*0.603*		< 0.0018	< 0.0022	< 0.002	< 0.0019
4,4'-DDD	mg/kg	24	—	520	—	16		< 0.0018	< 0.0022	< 0.002	< 0.0019
4,4'-DDE	mg/kg	17	—	370	—	54		< 0.0018	< 0.0022	< 0.002	< 0.0019
4,4'-DDT	mg/kg	17	1,500	100	2,100	32		< 0.0018	< 0.0022	< 0.002	< 0.0019
Endosulfan I	mg/kg	12,000	—	1,200	—	18		< 0.0018	< 0.0022	< 0.002	< 0.0019
Endosulfan II	mg/kg	12,000	—	1,200	—	18		< 0.0018	< 0.0022	< 0.002	< 0.0019
Endosulfan sulfate	mg/kg	12,000	—	1,200	—	18		< 0.0018	< 0.0022	< 0.002	< 0.0019
Endrin	mg/kg	610	—	61	—	1.0		< 0.0018	< 0.0022	< 0.002	< 0.0019
Endrin aldehyde	mg/kg	610	—	61	—	1.0		< 0.0018	< 0.0022	< 0.002	< 0.0019
Endrin ketone	mg/kg	610	—	61	—	1.0		< 0.0018	< 0.0022	< 0.002	< 0.0019
gamma-BHC	mg/kg	4.0	—	96	—	0.009		< 0.0018	< 0.0022	< 0.002	< 0.0019
gamma-Chlordane	mg/kg	16	140	100	22	10		< 0.0018	< 0.0022	< 0.002	< 0.0019
Heptachlor	mg/kg	1.0	11	28	16	23		< 0.0018	< 0.0022	< 0.002	< 0.0019
Heptachlor epoxide	mg/kg	1.0	9.2	2.7	13	1.0		< 0.0018	< 0.0022	< 0.002	< 0.0019
Methoxychlor	mg/kg	10,000	—	1,000	—	160		< 0.0018	< 0.0022	< 0.002	< 0.0019
Toxaphene	mg/kg	5.2	170	110	240	31		< 0.038	< 0.045	< 0.041	< 0.04
Aroclor - 1016	mg/kg	—	—	—	—	—		< 0.092	< 0.11	< 0.097	< 0.096
Aroclor - 1221	mg/kg	—	—	—	—	—		< 0.092	< 0.11	< 0.097	< 0.096
Aroclor - 1232	mg/kg	—	—	—	—	—		< 0.092	< 0.11	< 0.097	< 0.096
Aroclor - 1242	mg/kg	—	—	—	—	—		< 0.092	< 0.11	< 0.097	< 0.096
Aroclor - 1248	mg/kg	—	—	—	—	—		< 0.092	< 0.11	< 0.097	< 0.096
Aroclor - 1254	mg/kg	—	—	—	—	—		< 0.092	< 0.11	< 0.097	< 0.096
Aroclor - 1260	mg/kg	—	—	—	—	—		< 0.092	< 0.11	< 0.097	< 0.096
Polychlorinated Biphenyls (PCBs)	mg/kg	1.0	—	1.0	—	—		< 0.092	< 0.11	< 0.097	< 0.096

Table 6 - Terracon Soil Analytical Results - Herbicides
650 West 83rd Street, Chicago, IL
Project Number:A2157000

Analyte	Units	IEPA Tier 1 Soil Remediation Objectives					Sample Identification	B-1 (1-3)	B-1 (4-6)	B-8 (4-6)	B-11 (4-6)	B-16 (1-3)
		Industrial/Commercial Properties		Construction Workers		Soil Component of the Groundwater Ingestion Route	Sample Depth (feet)	1' - 3'	4' - 6'	4' - 6'	4' - 6'	1' - 3'
		Ingestion	Inhalation	Ingestion	Inhalation	Class I	Date Collected	6/27/2013	6/27/2013	6/26/2013	6/27/2013	6/27/2013
Herbicides												
2,4,5-T	mg/kg	20,000	—	20,000	—	5.2		< 0.0036	< 0.0038	--	< 0.004	--
2,4,5-TP (Silvex)	mg/kg	16,000	—	1,600	—	11		< 0.0036	< 0.0038	< 0.0043	< 0.004	--
2,4-D	mg/kg	20,000	—	2,000	—	1.5		< 0.0036	< 0.0038	< 0.0043	< 0.004	--
2,4-DB	mg/kg	—	—	—	—	—		< 0.0072	< 0.0077	--	< 0.0082	--
3,5-Dichlorobenzoic Acid	mg/kg	—	—	—	—	—		< 0.0036	< 0.0038	--	< 0.004	--
4-Nitrophenol	mg/kg	—	—	—	—	—		< 3.5	< 0.38	< 0.44	< 0.4	< 0.38
Acifluorfen	mg/kg	—	—	—	—	—		--	--	--	--	--
Chloramben	mg/kg	31,000	—	3,100	—	10		< 0.0036	< 0.0038	--	< 0.004	--
Dalapon	mg/kg	61,000	—	6,100	—	0.85		< 0.036	< 0.038	< 0.043	< 0.04	--
Dicamba	mg/kg	61,000	—	6,100	—	0.86		< 0.0072	< 0.0077	--	< 0.0082	--
Dichlorprop	mg/kg	—	—	—	—	—		< 0.0072	< 0.0077	--	< 0.0082	--
Dinoseb	mg/kg	2,000	—	200	—	0.25		< 0.0072	< 0.0077	< 0.0088	< 0.0082	--
MCPA	mg/kg	1,000	—	100	—	0.02		< 0.0072	< 0.0077	--	< 0.0082	--
MCPP	mg/kg	2,000	—	2,000	—	0.03		--	--	--	--	--
Pentachlorophenol	mg/kg	24	—	520	—	0.03		< 0.72	< 0.077	< 0.088	< 0.081	< 0.077
Picloram	mg/kg	140,000	—	14,000	—	2.0		< 0.0072	< 0.0077	< 0.0088	< 0.0082	--

Table 6 - Terracon Soil Analytical Results - Herbicides
650 West 83rd Street, Chicago, IL
Project Number:A2157000

Analyte	Units	IEPA Tier 1 Soil Remediation Objectives					Sample Identification	B-16 (4-6)	B-20 (1-3)	B-34 (1-3)
		Industrial/Commercial Properties		Construction Workers		Soil Component of the Groundwater Ingestion Route	Sample Depth (feet)	4' - 6'	1' - 3'	1' - 3'
		Ingestion	Inhalation	Ingestion	Inhalation	Class I	Date Collected	6/27/2013	6/27/2013	6/25/2013
Herbicides										
2,4,5-T	mg/kg	20,000	—	20,000	—	5.2		—	< 0.0041	< 0.004
2,4,5-TP (Silvex)	mg/kg	16,000	—	1,600	—	11		—	< 0.0041	< 0.004
2,4-D	mg/kg	20,000	—	2,000	—	1.5		—	< 0.0041	< 0.004
2,4-DB	mg/kg	—	—	—	—	—		—	< 0.0081	< 0.008
3,5-Dichlorobenzoic Acid	mg/kg	—	—	—	—	—		—	< 0.0041	< 0.004
4-Nitrophenol	mg/kg	—	—	—	—	—		< 0.44	< 0.41	< 0.4
Acifluorfen	mg/kg	—	—	—	—	—		—	—	—
Chloramben	mg/kg	31,000	—	3,100	—	10		—	< 0.0041	< 0.004
Dalapon	mg/kg	61,000	—	6,100	—	0.85		—	< 0.041	< 0.04
Dicamba	mg/kg	61,000	—	6,100	—	0.86		—	< 0.0081	< 0.008
Dichlorprop	mg/kg	—	—	—	—	—		—	< 0.0081	< 0.008
Dinoseb	mg/kg	2,000	—	200	—	0.25		—	< 0.0081	< 0.008
MCPA	mg/kg	1,000	—	100	—	0.02		—	< 0.0081	< 0.008
MCPP	mg/kg	2,000	—	2,000	—	0.03		—	—	—
Pentachlorophenol	mg/kg	24	—	520	—	0.03		< 0.09	< 0.083	< 0.08
Picloram	mg/kg	140,000	—	14,000	—	2.0		—	< 0.0081	< 0.008

Table 7 - Terracon Soil Analytical Results - SPLP/TCLP Inorganics
650 West 83rd Street, Chicago, IL
Project Number:A2157000

Analyte	Units	Tier 1 Groundwater Remediation Objectives	Hazardous Waste Toxicity Characteristic (35 IAC 721.124)	Sample Identification	B-3 (4-6)	B-5 (1-3)	B-11 (1-3)	B-11 (4-6)	B-13 (4-6)	B-16 (4-6)
				Sample Depth (feet)	4' - 6'	1' - 3'	1' - 3'	4' - 6'	4' - 6'	4' - 6'
				Date Collected	6/27/2013	6/25/2013	6/27/2013	6/27/2013	6/28/2013	6/27/2013
		Class I	mg/L							
SPLP Inorganic Analytical Parameters										
Aluminum	mg/L	3.5	—		--	--	--	--	--	--
Antimony	mg/L	0.006	—		--	--	--	--	--	--
Arsenic	mg/L	0.05	—		--	--	--	--	--	--
Barium	mg/L	2.0	—		--	--	--	--	--	--
Cobalt	mg/L	1.00	—		--	--	--	--	--	--
Iron	mg/L	5.00	—		--	--	--	--	--	--
Lead	mg/L	0.0075	—		--	--	--	--	--	--
Nickel	mg/L	0.10	—		--	--	--	--	--	--
Selenium	mg/L	0.05	—		--	--	--	--	--	--
TCLP Inorganic Analytical Parameters										
Lead	mg/L	0.0075	5.0		170	1.1	66	1.7	78	17

Table 7 - Terracon Soil Analytical Results - SPLP/TCLP Inorganics
650 West 83rd Street, Chicago, IL
Project Number:A2157000

Analyte	Units	Tier 1 Groundwater Remediation Objectives	Hazardous Waste Toxicity Characteristic (35 IAC 721.124)	Sample Identification	B-16VD (8-10)	B-17 (1-3)	B-106 (6-8)	B-108 (6-8)	B-108B(4-6)	B-110 (6-8)
				Sample Depth (feet)	8' - 10'	1' - 3'	6' - 8'	6' - 8'	4' - 6'	6' - 8'
		Class I	mg/L	Date Collected	9/26/2013	6/26/2013	9/27/2013	9/26/2013	10/23/2013	9/26/2013
SPLP Inorganic Analytical Parameters										
Aluminum	mg/L	3.5	---		--	--	--	--	--	--
Antimony	mg/L	0.006	---		--	--	--	--	--	--
Arsenic	mg/L	0.05	---		--	--	--	--	--	--
Barium	mg/L	2.0	---		--	--	--	--	--	--
Cobalt	mg/L	1.00	---		--	--	--	--	--	--
Iron	mg/L	5.00	---		--	--	--	--	--	--
Lead	mg/L	0.0075	---		--	--	--	--	--	--
Nickel	mg/L	0.10	---		--	--	--	--	--	--
Selenium	mg/L	0.05	---		--	--	--	--	--	--
TCLP Inorganic Analytical Parameters										
Lead	mg/L	0.0075	5.0		< 0.0083	0.2	4.6	0.18	0.081	0.018

Table 7 - Terracon Soil Analytical Results - SPLP/TCLP Inorganics
650 West 83rd Street, Chicago, IL
Project Number:A2157000

Analyte	Units	Tier 1 Groundwater Remediation Objectives	Hazardous Waste Toxicity Characteristic (35 IAC 721.124)	Sample Identification	B-110B (4-6)	B-112 (6-8)	B-112B (4-6)	B-114 (6-8)	B-114B(4-6)	B-116 (6-8)
				Sample Depth (feet)	4' - 6'	6' - 8'	4' - 6'	6' - 8'	4' - 6'	6' - 8'
		Class I	mg/L	Date Collected	10/23/2013	9/26/2013	10/23/2013	9/26/2013	10/23/2013	9/27/2013
SPLP Inorganic Analytical Parameters										
Aluminum	mg/L	3.5	—		--	--	--	--	--	--
Antimony	mg/L	0.006	—		--	--	--	--	--	--
Arsenic	mg/L	0.05	—		--	--	--	--	--	--
Barium	mg/L	2.0	—		--	--	--	--	--	--
Cobalt	mg/L	1.00	—		--	--	--	--	--	--
Iron	mg/L	5.00	—		--	--	--	--	--	--
Lead	mg/L	0.0075	—		--	--	--	--	--	--
Nickel	mg/L	0.10	—		--	--	--	--	--	--
Selenium	mg/L	0.05	—		--	--	--	--	--	--
TCLP Inorganic Analytical Parameters										
Lead	mg/L	0.0075	5.0		0.03	< 0.005	0.0056	0.0064	0.0073	0.029

Table 7 - Terracon Soil Analytical Results - SPLP/TCLP Inorganics
650 West 83rd Street, Chicago, IL
Project Number:A2157000

Analyte	Units	Tier 1 Groundwater Remediation Objectives	Hazardous Waste	Sample Identification	B-116B(1-3)	B-118 (6-8)	B-118B(1-3)	B-120 (6-8)	B-120B(1-3)	B-134 (4-6)
			Toxicity Characteristic (35 IAC 721.124)	Sample Depth (feet)	1' - 3'	6' - 8'	1' - 3'	6' - 8'	1' - 3'	4' - 6'
		Class I	mg/L	Date Collected	10/23/2013	9/27/2013	10/23/2013	9/27/2013	10/23/2013	10/23/2013
SPLP Inorganic Analytical Parameters										
Aluminum	mg/L	3.5	—		--	--	--	--	--	--
Antimony	mg/L	0.006	—		--	--	--	--	--	--
Arsenic	mg/L	0.05	—		--	--	--	--	--	--
Barium	mg/L	2.0	—		--	--	--	--	--	--
Cobalt	mg/L	1.00	—		--	--	--	--	--	--
Iron	mg/L	5.00	—		--	--	--	--	--	--
Lead	mg/L	0.0075	—		--	--	--	--	--	--
Nickel	mg/L	0.10	—		--	--	--	--	--	--
Selenium	mg/L	0.05	—		--	--	--	--	--	--
TCLP Inorganic Analytical Parameters										
Lead	mg/L	0.0075	5.0		< 0.005	0.014	0.16	< 0.005	0.015	0.46

Table 7 - Terracon Soil Analytical Results - SPLP/TCLP Inorganics
650 West 83rd Street, Chicago, IL
Project Number:A2157000

Analyte	Units	Tier 1 Groundwater Remediation Objectives	Hazardous Waste Toxicity Characteristic (35 IAC 721.124)	Sample Identification	B-201 (4-6')	B-202 (4-6')	B-203 (6-8')	B-204 (4-6')	B-205 (4-6')	B-206 (4-6')
				Sample Depth (feet)	(4-6')	(4-6')	(6-8')	(4-6')	(4-6')	(4-6')
		Class I	mg/L	Date Collected	02/20/2015	02/20/2015	02/20/2015	02/20/2015	02/20/2015	02/20/2015
SPLP Inorganic Analytical Parameters										
Aluminum	mg/L	3.5	---		--	--	--	--	--	--
Antimony	mg/L	0.006	---		--	--	--	--	--	--
Arsenic	mg/L	0.05	---		--	--	--	--	--	--
Barium	mg/L	2.0	---		--	--	--	--	--	--
Cobalt	mg/L	1.00	---		--	--	--	--	--	--
Iron	mg/L	5.00	---		--	--	--	--	--	--
Lead	mg/L	0.0075	---		--	--	--	--	--	--
Nickel	mg/L	0.10	---		--	--	--	--	--	--
Selenium	mg/L	0.05	---		--	--	--	--	--	--
TCLP Inorganic Analytical Parameters										
Lead	mg/L	0.0075	5.0		0.14	0.38	0.046	0.27	0.16	0.14

Table 7 - Terracon Soil Analytical Results - SPLP/TCLP Inorganics
650 West 83rd Street, Chicago, IL
Project Number:A2157000

Analyte	Units	Tier 1 Groundwater Remediation Objectives	Hazardous Waste Toxicity Characteristic (35 IAC 721.124)	Sample Identification	B-211 (6-8')	B-212 (1-3')	B-213 (1-3')	B-213 (4-6')	B-214 (1-3')
				Sample Depth (feet)	(6-8')	(1-3')	(1-3')	(4-6')	(1-3')
				Date Collected	02/20/2015	02/20/2015	02/20/2015	02/20/2015	02/20/2015
		Class I	mg/L						
SPLP Inorganic Analytical Parameters									
Aluminum	mg/L	3.5	—		--	--	1.0	--	--
Antimony	mg/L	0.006	—		--	--	--	0.0086	--
Arsenic	mg/L	0.05	—		--	--	--	--	0.0066
Barium	mg/L	2.0	—		--	0.023	--	--	--
Cobalt	mg/L	1.00	—		--	--	< 0.0040	--	--
Iron	mg/L	5.00	—		--	--	--	0.69	--
Lead	mg/L	0.0075	—		0.093	--	--	--	--
Nickel	mg/L	0.10	—		--	--	< 0.0080	--	--
Selenium	mg/L	0.05	—		--	< 0.0040	--	--	< 0.0040
TCLP Inorganic Analytical Parameters									
Lead	mg/L	0.0075	5.0		--	--	--	--	--

Table 8 - Terracon Groundwater Analytical Results
Terracon Project No: A2157000
650 West 83rd Street, Chicago, IL

Analyte		Units	Groundwater Remediation Objectives	Tier 1 Groundwater Remediation Objectives for the Indoor Inhalation Exposure Route		Sample ID	MW-5	MW-10	MW-34	MW-122
			Groundwater Ingestion Route Values	Diffusion and Advection	Diffusion Only					
				Ground Water	Ground Water					
			Class I	Industrial/ Commercial	Industrial/ Commercial	Date Collected	6/27/2013 & 7/19/2013	6/27/2013 & 7/19/2013	6/27/2013 & 7/19/2013	9/26/2013
Volatile Organic Analytical Parameters										
71-43-2	Benzene	mg/L	0.005	0.41	2.6		< 0.005	< 0.005	< 0.005	< 0.002
108-88-3	Toluene	mg/L	1.0	530	530		< 0.005	< 0.005	< 0.005	< 0.005
100-41-4	Ethylbenzene	mg/L	0.7	1.4	8.1		< 0.005	< 0.005	< 0.005	< 0.005
1330-20-7	Xylenes (total)	mg/L	10.0	93	110		< 0.005	< 0.005	< 0.005	0.014
1634-04-4	Methyl Tertiary-Butyl Ether	mg/L	0.07	6800	51000		< 0.005	< 0.005	< 0.005	< 0.005
67-64-1	Acetone	mg/L	6.3	1000000	1000000		< 0.100	< 0.100	< 0.100	< 0.1
75-27-4	Bromodichloromethane	mg/L	0.0002	6700	6700		< 0.002	< 0.002	< 0.002	< 0.002
75-25-2	Bromoform	mg/L	0.001	12	1300		< 0.002	< 0.002	< 0.002	< 0.002
78-93-3	2-Butanone	mg/L	4.2	48000	220000		< 0.005	< 0.005	< 0.005	< 0.005
75-15-0	Carbon Disulfide	mg/L	0.7	210	820		< 0.005	< 0.005	< 0.005	< 0.005
56-23-5	Carbon Tetrachloride	mg/L	0.005	0.076	0.31		< 0.005	< 0.005	< 0.005	< 0.005
108-90-7	Chlorobenzene	mg/L	0.1	82	470		< 0.005	< 0.005	< 0.005	< 0.005
75-00-3	Chloroethane	mg/L	---	---	---		< 0.005	< 0.005	< 0.005	< 0.005
67-66-3	Chloroform	mg/L	0.0002	0.15	1.1		< 0.005	< 0.005	< 0.005	< 0.005
74-87-3	Chloromethane	mg/L	---	---	---		< 0.005	< 0.005	< 0.005	< 0.005
156-59-2	cis-1,2-Dichloroethene	mg/L	0.07	3500	3500		< 0.005	< 0.005	< 0.005	< 0.005
124-48-1	Dibromochloromethane	mg/L	0.14	2600	2600		< 0.005	< 0.005	< 0.005	< 0.005
75-34-3	1,1-Dichloroethane	mg/L	0.7	580	4100		< 0.005	< 0.005	< 0.005	< 0.005
107-06-2	1,2-Dichloroethane	mg/L	0.005	0.22	3.5		< 0.005	< 0.005	< 0.005	< 0.005
75-35-4	1,1-Dichloroethene	mg/L	0.007	74	300		< 0.005	< 0.005	< 0.005	< 0.005
78-87-5	1,2-Dichloropropane	mg/L	0.005	0.48	4.5		< 0.005	< 0.005	< 0.005	< 0.005
10061-02-6	1,3-Dichloropropene (cis + trans)	mg/L	0.001	0.52	2.6		< 0.002	< 0.002	< 0.002	< 0.002
591-78-6	2-Hexanone	mg/L	0.035	---	---		< 0.005	< 0.005	< 0.005	< 0.005
108-10-1	4-Methyl-2-pentanone	mg/L	0.56	---	---		< 0.005	< 0.005	< 0.005	< 0.005
75-09-2	Methylene Chloride	mg/L	0.005	8.2	84		< 0.005	< 0.005	< 0.005	< 0.005
100-42-5	Styrene	mg/L	0.1	310	310		< 0.005	< 0.005	< 0.005	< 0.005
79-34-5	1,1,2,2-Tetrachloroethane	mg/L	0.0043	---	---		< 0.005	< 0.005	< 0.005	< 0.005
127-18-4	Tetrachloroethene	mg/L	0.005	0.34	1.6		< 0.002	< 0.002	< 0.002	< 0.002
156-60-5	trans-1,2-Dichloroethene	mg/L	0.1	51	310		< 0.005	< 0.005	< 0.005	< 0.005
79-01-6	Trichloroethene	mg/L	0.005	1.3	6.7		< 0.002	< 0.002	< 0.002	< 0.002
71-55-6	1,1,1-Trichloroethane	mg/L	0.2	1300	1300		< 0.005	< 0.005	< 0.005	< 0.005
79-00-5	1,1,2-Trichloroethane	mg/L	0.005	4400	4400		< 0.005	< 0.005	< 0.005	< 0.005
75-01-4	Vinyl Chloride	mg/L	0.002	0.21	0.75		< 0.002	< 0.002	< 0.002	< 0.002
Semivolatile Organic Analytical Parameters - PNAs										
83-32-9	Acenaphthene	mg/L	0.42	---	---		< 0.010	< 0.001	< 0.001	< 0.010
208-96-8	Acenaphthylene	mg/L	0.21	---	---		< 0.010	< 0.001	< 0.001	< 0.010
120-12-7	Anthracene	mg/L	2.1	---	---		< 0.010	< 0.0005	< 0.0005	< 0.010
56-55-3	Benzo(a)anthracene	mg/L	0.00013	---	---		< 0.002	< 0.0001	< 0.0001	< 0.002
50-32-8	Benzo(a)pyrene	mg/L	0.0002	---	---		< 0.003	< 0.0002	< 0.0002	< 0.003

Table 8 - Terracon Groundwater Analytical Results
Terracon Project No: A2157000
650 West 83rd Street, Chicago, IL

Analyte		Units	Groundwater Remediation Objectives	Tier 1 Groundwater Remediation Objectives for the Indoor Inhalation Exposure Route		Sample ID	MW-5	MW-10	MW-34	MW-122
			Groundwater Ingestion Route Values	Diffusion and Advection	Diffusion Only					
				Ground Water	Ground Water					
			Class I	Industrial/ Commercial	Industrial/ Commercial	Date Collected	6/27/2013 & 7/19/2013	6/27/2013 & 7/19/2013	6/27/2013 & 7/19/2013	9/26/2013
205-99-2	Benzo(b)fluoranthene	mg/L	0.00018	---	---		< 0.002	< 0.00018	< 0.00018	< 0.002
191-24-2	Benzo(g,h,i)perylene	mg/L	0.21	---	---		< 0.010	< 0.0003	< 0.0003	< 0.010
207-08-9	Benzo(k)fluoranthene	mg/L	0.00017	---	---		< 0.005	< 0.00017	< 0.00017	< 0.005
218-01-9	Chrysene	mg/L	0.0015	---	---		< 0.003	< 0.0002	< 0.0002	< 0.003
53-70-3	Dibenzo(a,h)anthracene	mg/L	0.0003	---	---		< 0.010	< 0.0002	< 0.0002	< 0.010
206-44-0	Fluoranthene	mg/L	0.28	---	---		< 0.010	< 0.0002	< 0.0002	< 0.010
86-73-7	Fluorene	mg/L	0.28	---	---		< 0.010	< 0.002	< 0.002	< 0.010
193-39-5	Indeno(1,2,3-c,d)pyrene	mg/L	0.00043	---	---		< 0.010	< 0.0003	< 0.0003	< 0.010
91-20-3	Naphthalene	mg/L	0.14	0.32	13		< 0.012	< 0.001	< 0.001	< 0.012
85-01-8	Phenanthrene	mg/L	0.21	---	---		< 0.010	< 0.0005	< 0.0005	< 0.010
129-00-0	Pyrene	mg/L	0.21	---	---		< 0.010	< 0.0002	< 0.0002	< 0.010
111-91-1	bis(2-Chloroethoxy) methane	mg/L	---	---	---		< 0.010	--	--	< 0.010
111-44-4	bis(2-Chloroethyl) ether	mg/L	0.01	0.43	48		< 0.010	--	--	< 0.010
117-81-7	bis(2-Ethylhexyl)phthalate	mg/L	0.006	---	---		< 0.005	--	--	< 0.005
101-55-3	4-Bromophenyl-phenyl ether	mg/L	---	---	---		< 0.010	--	--	< 0.010
85-68-7	Butylbenzylphthalate	mg/L	1.4	---	---		< 0.010	--	--	< 0.010
86-74-8	Carbazole	mg/L	---	---	---		< 0.010	--	--	< 0.010
106-47-8	4-Chloroaniline	mg/L	0.028	---	---		< 0.020	--	--	< 0.020
91-58-7	2-Chloronaphthalene	mg/L	0.56	---	---		< 0.012	--	--	< 0.012
59-50-7	4-Chloro-3-methylphenol	mg/L	0.49	---	---		< 0.020	--	--	< 0.020
95-57-8	2-Chlorophenol	mg/L	0.035	22000	22000		< 0.010	--	--	< 0.010
7005-72-3	4-Chlorophenyl-phenyl ether	mg/L	---	---	---		< 0.010	--	--	< 0.010
132-64-9	Dibenzofuran	mg/L	0.007	---	---		< 0.010	--	--	< 0.010
95-50-1	1,2-Dichlorobenzene	mg/L	0.6	160	160		< 0.010	--	--	< 0.010
541-73-1	1,3-Dichlorobenzene	mg/L	0.0063	---	---		< 0.010	--	--	< 0.010
106-46-7	1,4-Dichlorobenzene	mg/L	0.075	79	79		< 0.010	--	--	< 0.010
91-94-1	3,3'-Dichlorobenzidine	mg/L	0.02	---	---		< 0.020	--	--	< 0.020
120-83-2	2,4-Dichlorophenol	mg/L	0.021	---	---		< 0.010	--	--	< 0.010
84-66-2	Diethylphthalate	mg/L	5.6	---	---		< 0.010	--	--	< 0.010
131-11-3	Dimethylphthalate	mg/L	---	---	---		< 0.050	--	--	< 0.050
84-74-2	Di-n-butylphthalate	mg/L	0.7	---	---		< 0.011	--	--	< 0.011
105-67-9	2,4-Dimethylphenol	mg/L	0.14	---	---		< 0.010	--	--	< 0.010
534-52-1	4,6-Dinitro-2-methylphenol	mg/L	0.00056	---	---		< 0.050	--	--	< 0.050
51-28-5	2,4-Dinitrophenol	mg/L	0.014	---	---		< 0.010	--	--	< 0.010
121-14-2	2,4-Dinitrotoluene	mg/L	0.00002	---	---		< 0.0004	--	--	< 0.0004
606-20-2	2,6-dinitrotoluene	mg/L	0.00031	---	---		< 0.0007	--	--	< 0.0007
117-84-0	Di-n-octylphthalate	mg/L	0.14	---	---		< 0.010	--	--	< 0.010
118-74-1	Hexachlorobenzene	mg/L	0.00006	0.0062	0.0062		< 0.003	--	--	< 0.003
87-68-3	Hexachlorobutadiene	mg/L	0.007	---	---		< 0.011	--	--	< 0.011
77-47-4	Hexachlorocyclopentadiene	mg/L	0.05	0.26	1.5		< 0.012	--	--	< 0.012
67-72-1	Hexachloroethane	mg/L	0.007	50	50		< 0.0008	--	--	< 0.0008
78-59-1	Isophorone	mg/L	1.4	12000	12000		< 0.010	--	--	< 0.010

Table 8 - Terracon Groundwater Analytical Results
Terracon Project No: A2157000
650 West 83rd Street, Chicago, IL

Analyte		Units	Groundwater Remediation Objectives	Tier 1 Groundwater Remediation Objectives for the Indoor Inhalation Exposure Route		Sample ID	MW-5	MW-10	MW-34	MW-122
			Groundwater Ingestion Route Values	Diffusion and Advection	Diffusion Only					
				Ground Water	Ground Water					
			Class I	Industrial/ Commercial	Industrial/ Commercial	Date Collected	6/27/2013 & 7/19/2013	6/27/2013 & 7/19/2013	6/27/2013 & 7/19/2013	9/26/2013
91-57-6	2-Methylnaphthalene	mg/L	0.028	25	25		< 0.012	--	--	< 0.012
95-48-7	2-Methylphenol	mg/L	0.35	26000	26000		< 0.010	--	--	< 0.011
106-44-5	4-Methylphenol	mg/L	0.7	---	---		< 0.010	--	--	< 0.010
88-74-4	2-Nitroaniline	mg/L	0.105	---	---		< 0.050	--	--	< 0.050
99-09-2	3-Nitroanaline	mg/L	0.0021	---	---		< 0.050	--	--	< 0.050
100-01-6	4-Nitroaniline	mg/L	0.028	---	---		< 0.020	--	--	< 0.020
98-95-3	Nitrobenzene	mg/L	0.0035	2	170		< 0.012	--	--	< 0.012
88-75-5	2-Nitrophenol	mg/L	---	---	---		< 0.013	--	--	< 0.013
100-02-7	4-Nitrophenol	mg/L	0.056	---	---		< 0.050	--	--	< 0.050
621-64-7	N-Nitroso-di-n-propylamine	mg/L	0.0018	0.27	24		< 0.0007	--	--	< 0.0007
86-30-6	N-nitrosodiphenylamine	mg/L	0.0032	---	---		< 0.004	--	--	< 0.004
87-86-5	Pentachlorophenol	mg/L	0.001	---	---		< 0.0025	--	--	< 0.0025
108-95-2	Phenol	mg/L	0.1	83000	83000		< 0.010	--	--	< 0.010
120-82-1	1,2,4-Trichlorobenzene	mg/L	0.07	5.9	35		< 0.012	--	--	< 0.012
95-95-4	2,4,5-Trichlorophenol	mg/L	0.7	---	---		< 0.010	--	--	< 0.010
88-06-2	2,4,6-Trichlorophenol	mg/L	0.01	---	---		< 0.010	--	--	< 0.010
Pesticide and Aroclors Organic Analytical Parameters										
309-00-2	Aldrin	mg/L	0.014	---	---		< 0.00008	--	--	< 0.00008
319-84-6	alpha-BHC	mg/L	0.00011	---	---		< 0.00008	--	--	< 0.00008
319-85-7	beta-BHC	mg/L	---	---	---		< 0.00008	--	--	< 0.00008
319-86-8	delta-BHC	mg/L	---	---	---		< 0.00008	--	--	< 0.00008
60-57-1	Dieldrin	mg/L	0.009	---	---		< 0.00016	--	--	< 0.00016
72-54-8	4,4'-DDD	mg/L	0.014	---	---		< 0.00016	--	--	< 0.00016
72-55-9	4,4'-DDE	mg/L	0.01	---	---		< 0.00016	--	--	< 0.00016
50-29-3	4,4'-DDT	mg/L	0.006	---	---		< 0.00016	--	--	< 0.00016
959-98-8	Endosulfan I	mg/L	0.042	---	---		< 0.00008	--	--	< 0.00008
33213-65-9	Endosulfan II	mg/L	0.042	---	---		< 0.00016	--	--	< 0.00016
1031-07-8	Endosulfan sulfate	mg/L	0.042	---	---		< 0.00016	--	--	< 0.00016
72-20-8	Endrin	mg/L	0.002	---	---		< 0.00016	--	--	< 0.00016
7421-93-4	Endrin aldehyde	mg/L	0.002	---	---		< 0.00016	--	--	< 0.00016
53494-70-5	Endrin ketone	mg/L	0.002	---	---		< 0.00016	--	--	< 0.00016
58-89-9	gamma-BHC	mg/L	0.0002	---	---		< 0.00008	--	--	< 0.00008
76-44-8	Heptachlor	mg/L	0.0004	0.0096	0.18		< 0.00008	--	--	< 0.00008
1024-57-3	Heptachlor epoxide	mg/L	0.0002	---	---		< 0.00008	--	--	< 0.00008
72-43-5	Methoxychlor	mg/L	0.04	---	---		< 0.00008	--	--	< 0.00008
8001-35-2	Toxaphene	mg/L	0.003	---	---		< 0.00016	--	--	< 0.00016
12674-11-2	Aroclor - 1016	mg/L	0.0005	---	---		< 0.0008	--	--	< 0.00008
11104-28-2	Aroclor - 1221	mg/L	0.0005	---	---		< 0.0008	--	--	< 0.00008
11141-16-5	Aroclor - 1232	mg/L	0.0005	---	---		< 0.0008	--	--	< 0.00008
53469-21-9	Aroclor - 1242	mg/L	0.0005	---	---		< 0.0008	--	--	< 0.00008
12672-29-6	Aroclor - 1248	mg/L	0.0005	---	---		< 0.0008	--	--	< 0.00008

Table 8 - Terracon Groundwater Analytical Results
Terracon Project No: A2157000
650 West 83rd Street, Chicago, IL

Analyte		Units	Groundwater Remediation Objectives	Tier 1 Groundwater Remediation Objectives for the Indoor Inhalation Exposure Route		Sample ID	MW-5	MW-10	MW-34	MW-122
			Groundwater Ingestion Route Values	Diffusion and Advection	Diffusion Only					
				Ground Water	Ground Water					
			Class I	Industrial/ Commercial	Industrial/ Commercial	Date Collected	6/27/2013 & 7/19/2013	6/27/2013 & 7/19/2013	6/27/2013 & 7/19/2013	9/26/2013
11097-69-1	Aroclor - 1254	mg/L	0.0005	---	---		< 0.0016	--	--	< 0.0016
11096-82-5	Aroclor - 1260	mg/L	0.0005	---	---		< 0.0016	--	--	< 0.0016
1336-36-3	Polychlorinated Biphenyls (PCBs)	mg/L	0.0005	---	---		< 0.0016	--	--	< 0.0016
Inorganic Analytical Parameters										
7440-38-2	Arsenic	mg/L	0.05	---	---		< 0.012	0.029	0.007	0.013
7440-39-3	Barium	mg/L	2.0	---	---		0.117	0.107	0.143	0.228
7440-43-9	Cadmium	mg/L	0.005	---	---		< 0.002	< 0.002	< 0.002	0.004
7440-47-3	Chromium	mg/L	0.1	---	---		< 0.008	0.015	0.01	0.044
7439-92-1	Lead	mg/L	0.0075	---	---		0.012	0.063	0.026	0.082
7439-97-6	Mercury	mg/L	0.002	0.060	0.060		< 0.0005	< 0.0005	< 0.0005	< 0.0005
7782-49-2	Selenium	mg/L	0.05	---	---		< 0.002	< 0.004	< 0.004	< 0.002
7440-22-4	Silver	mg/L	0.05	---	---		< 0.004	< 0.002	< 0.002	< 0.001
7429-90-5	Aluminum	mg/L	3.5	---	---		4.65	--	--	4.62
7440-36-0	Antimony	mg/L	0.006	---	---		< 0.006	--	--	< 0.006
7440-41-7	Beryllium	mg/L	0.004	---	---		< 0.006	--	--	< 0.001
7440-70-2	Calcium	mg/L	---	---	---		223	--	--	469
7440-48-4	Cobalt	mg/L	1.0	---	---		< 0.012	--	--	0.036
7440-50-8	Copper	mg/L	0.65	---	---		0.01	--	--	0.037
57-12-5	Cyanide	mg/L	0.2	---	---		< 0.005	--	--	< 0.005
7439-89-6	Iron	mg/L	5.0	---	---		16.8	--	--	15.6
7439-95-4	Magnesium	mg/L	---	---	---		75.4	--	--	112
7439-96-5	Manganese	mg/L	0.15	---	---		1.42	--	--	2.94
7440-02-0	Nickel	mg/L	0.1	---	---		0.011	--	--	0.032
7440-09-7	Potassium	mg/L	---	---	---		11.3	--	--	16
7440-23-5	Sodium	mg/L	---	---	---		96.2	--	--	100
7440-28-0	Thallium	mg/L	0.002	---	---		< 0.01	--	--	0.01
7440-62-2	Vanadium	mg/L	0.049	---	---		< 0.012	--	--	0.02
7440-66-6	Zinc	mg/L	5.0	---	---		< 0.004	--	--	0.219
Herbicides										
93-72-1	2,4,5-TP (Silvex)	mg/L	0.05	---	---		< 0.001	--	--	--
94-75-7	2,4-D	mg/L	0.07	---	---		< 0.001	--	--	--
100-02-7	4-Nitrophenol	mg/L	---	---	---		< 0.050	--	--	--
75-99-0	Dalapon	mg/L	0.2	900000	900000		< 0.005	--	--	--
1918-00-9	Dicamba	mg/L	0.21	---	---		< 0.0003	--	--	--
88-85-7	Dinoseb	mg/L	0.007	---	---		< 0.001	--	--	--
93-65-2	MCPP	mg/L	---	---	---		< 0.050	--	--	--
87-86-5	Pentachlorophenol	mg/L	0.001	---	---		< 0.0025	--	--	--
1918-02-1	Picloram	mg/L	0.5	---	---		< 0.001	--	--	--
	pH	S.U.	---	---	---		6.74	--	6.85	7.03

Table 9 - Terracon Soil Gas Analytical Results
2FM West 83rd Street Phase II
650 West 83rd Street, Chicago, IL

Volatile Chemical	Units	Soil Gas Tier 1 Remediation Objectives			Sample Identification	SG-16	SG-14	SG-8b	SG-35b
		OUTDOOR Inhalation Exposure Route		INDOOR Inhalation Exposure Route	Sample Depth (feet)	–	–	–	–
				Diffusion and Advection	Date Collected	9/26/2013	9/26/2013	9/26/2013	9/26/2013
		Industrial / Commercial	Construction Workers	Industrial / Commercial					
Volatile Organic Analytical Parameters									
Benzene	mg/m^3	800	1100	2.8		0.0079	–	–	–
Toluene	mg/m^3	140000	50000	40000		0.0064	–	–	–
Ethylbenzene	mg/m^3	59000	8500	9.3		< 0.0019	–	–	–
Xylenes (total)	mg/m^3	49000	2900	840		0.0056	–	–	–
Methyl Tertiary-Butyl Ether	mg/m^3	1200000	23000	24000		0.019	–	–	–
Acetone	mg/m^3	750000	750000	750000		0.15	–	–	–
Bromodichloromethane	mg/m^3	450000	450000	450000		< 0.0027	–	–	–
Bromoform	mg/m^3	3500	4900	52		< 0.011	–	–	–
Bromomethane	mg/m^3	19000	2400	42		< 0.004	–	–	–
2-Butanone	mg/m^3	380000	15000	40000		0.024	–	–	–
Carbon Disulfide	mg/m^3	1500000	48000	5300		0.02	–	–	–
Carbon Tetrachloride	mg/m^3	550	770	1.5		< 0.0027	–	–	–
Chlorobenzene	mg/m^3	57000	3700	420		< 0.0019	–	–	–
Chloroform	mg/m^3	200	290	0.92		< 0.0021	–	–	–
cis-1,2-Dichloroethene	mg/m^3	1100000	1100000	1100000		< 0.0017	–	–	–
Dibromochloromethane	mg/m^3	57000	150	57000		< 0.0035	–	–	–
1,1-Dichloroethane	mg/m^3	1300000	90000	4200		< 0.0017	–	–	–
1,2-Dichloroethane	mg/m^3	130	180	0.81		< 0.0017	–	–	–
1,1-Dichloroethene	mg/m^3	820000	5300	1600		< 0.0017	–	–	–
1,2-Dichloropropane	mg/m^3	470	110	2.3		< 0.0019	–	–	–
1,3-Dichloropropene (cis + trans)	mg/m^3	3700	1400	6.2		< 0.0019	–	–	–
Methylene Chloride	mg/m^3	12000	5100	45		< 0.014	–	–	–
Styrene	mg/m^3	34000	16000	8500		< 0.0019	–	–	–
Tetrachloroethene	mg/m^3	690	970	4.0		< 0.0029	–	–	–
trans-1,2-Dichloroethene	mg/m^3	190000	12000	510		< 0.0017	–	–	–
Trichloroethene	mg/m^3	3300	1500	12		< 0.0023	–	–	–
1,1,1-Trichloroethane	mg/m^3	870000	89000	41000		< 0.0023	–	–	–
1,1,2-Trichloroethane	mg/m^3	170000	170000	170000		< 0.0023	–	–	–
Vinyl Chloride	mg/m^3	3000	3000	4.8		< 0.001	–	–	–
Semivolatile Organic Analytical Parameters									
Naphthalene	mg/m^3	620	5.8	0.75		0.0043	0.14	0.14	0.0062

Table Notes

Remediation Objectives from 35 Illinois Administrative Code Chapter 742: *Tiered Approach to Corrective Action Objectives* (TACO).

Remediation Objectives for Non-TACO compounds from Illinois Environmental Protection Agency's (IEPA's) web site (http://www.epa.state.il.us/land/taco/chemicals-not-in-taco-tier-1-tables.html).

mg/L = milligrams per liter, generally equivalent to parts per million (ppm)

mg/kg = milligrams per kilogram, generally equivalent to ppm

mg/m3 = milligrams per cubic meter

TCLP = Toxicity Characteristic Leaching Procedure

SPLP = Synthetic Precipitation Leaching Procedure

-- = Sample not analyzed for this constituent

--- = No IEPA Remediation Objective for this exposure route.

Bold = Inorganic analyte concentrations above background concentrations.

* In pH-specific table, hexavalent chromium used as RO for total chromium to allow for a conservative comparison.

** To adequately characterize the pH of the soil on site, 15 samples were selected throughout the entire site area and at each subsurface interval. Inorganic pH-specific analyses for samples with no laboratory pH value were evaluated using the nearest sample pH from the same subsurface interval.

[ ] = Highlighted cell indicates exceedance of Tier 1 Remedial Objective value. Background considered SRO value for many PNA constituents. Italicized Tier 1 ROs were changed to laboratory Accepted Detection Limits (ADL) per 35 IAC 742.510 a) 8.

Calcium, magnesium, sodium and potassium were detected over background in soil samples, but are considered nutrients in soil and do not require further consideration.

APPENDIX A
SRP DRM-1 & DRM-2 FORMS

Illinois Environmental Protection Agency

Bureau of Land • 1021 North Grand Avenue East • P.O. Box 19276 • Springfield • Illinois • 62794-9276

Site Remediation Program (SRP)
Application and Services Agreement (DRM-1) Form

For Illinois EPA Use:
Log No. _____
____ $500 Advance Partial Payment Included
____ DRM-2 SRP Form Included
____ DR–3 Request for Assessment Included

This fillable form may be completed online, a copy saved locally, printed and signed before it is submitted to the Remedial Project Management Section at the above address.

I. Site Identification:

Site Name: 650 W. 83rd Street County: Cook
Street Address: 650 W. 83rd Street P.O. Box: _____
City: Chicago State: IL Zip Code: 60620 Approx. site size (acres) 9
Illinois Inventory ID Number: _____ USEPA ID Number _____
Site Base Map Attached: ☑ Yes ☐ No Illinois EPA Permit(s): _____
LUST/IEMA Incident Number(s), if applicable: _____

II. Remediation Applicant ("RA"):

RA's Name: Mr./Ms. Ms. Kimberly Worthington Title: Deputy Commissioner
Company: City of Chicago, Department of Fleet and Facility Management (2FM)
Street Address: 30 North LaSalle Street, 3rd Floor P.O. Box: _____
City: Chicago State: IL Zip Code: 60602-2575 Phone: 312-744-9139
FEIN or SSN: 36-6005820

I hereby certify that I am authorized to sign this application and services agreement. I certify that the proposed project meets the eligibility criteria set forth in Section 58.1(a)(2) of the Environmental Protection Act (415 ILCS 5/58.1(1)(2)) and regulations promulgated thereunder and that this submittal and all attachments were prepared at my direction. In consideration for the Illinois EPA's agreement to provide (subject to applicable law, available resources, and receipt of the advance partial payment) review and evaluation services for activities carried out pursuant to Title 17 of the Illinois Environmental Protection Act (415 ILCS 5/58-58.12), I agree to:

(1) Conform with the procedures of Title 17 of the Illinois Environmental Protection Act (415 ILCS 5/58 - 58.12) and implementing regulations;

(2) Allow for or otherwise arrange site visits or other site evaluations by the Illinois EPA when requested;

(3) Pay any reasonable costs incurred and documented by the Illinois EPA in providing such services; and

(4) Make an advance partial payment to the Illinois EPA for such anticipated services provided in Section V of this application.

As the RA, I understand that I may terminate this services agreement at any time, by notifying the Illinois EPA in writing that services previously requested under the services agreement are no longer wanted. Within 180 days of receipt of the notice, the Illinois EPA shall provide me with a final invoice for services provided until the date of receipt of such notification.

To the best of my knowledge and belief, this request and all attachments are true, accurate and complete. I hereby certify that I have the authority to enter into this agreement.

Any person who knowingly makes a false, fictitious, or fraudulent material statement, orally or in writing, to the Illinois EPA commits a Class 4 felony. A second or subsequent conviction is a Class 3 felony. (415 ILCS 5/44(h)).

RA's Signature: _____ Date: 4/14/15

***In addition to the fees applicable under this Services Agreement, the recipient of a No Further Remediation (NFR) Letter must pay to the Illinois EPA an NFR Assessment in the amount of the lesser of $2500 or an amount equal to the costs incurred by the Illinois EPA under this Agreement (35 IAC 740.615)**

III. Project Objectives:

A. Release Letter Requested.

Please complete one of the subsections by checking applicable boxes and including other information (if necessary, additonal information may be attached to this application form):

☑ Comprehensive No Further Remediation ("NFR") Letter

☐ Focused NFR Letter
Identify the focused contaminants of concern by checking the applicable box(es):

☐ Volatiles ☐ BTEX ☐ PCBs ☐ Metals ☐ Semivolatiles ☐ PNAs
☐ Pesticides ☐ Other (identify) _____

☐ 4(y) Letter
Identify the focused contaminants of concern by checking the applicable box(es):

☐ Volatiles ☐ BTEX ☐ PCBs ☐ Metals ☐ Semivolatiles ☐ PNAs
☐ Pesticides ☐ Other (identify) _____

Identify the media of concern by checking the applicable box(es):

☐ Soil ☐ Sediments ☐ Other: _____

Identify the actions (e.g. drum removal, spill response, etc.):

B. Identify any support services being sought from the Illinois EPA in addition to the review and evaluation services. If necessary, additional information may be attached to this application form.

☑ No additional support services are being sought
☐ Assistance with community relations
☐ Sample collection and analyses
☐ Other (identify): _____

C. Anticipated Schedule

SRP Document	Projected Date of Receipt by Illinois EPA
Site Investigation Report	Mar 30, 2015
Remediation Objectives Report	Mar 30, 2015
Remedial Action Plan	Mar 30, 2015
Remedial Action Completion Report	Dec 30, 2016

D. Identify the current and post-remedation uses of the remediation site. If necessary, additional information may be attached to this application form.

Current Use:
Vacant graded land

Post-Remediation Use:
Industrial/Commercial

IV. Written Permission from the Property Owner (check one of the applicable boxes and provide additional information):

☑ RA is the property owner of the remediation site identified in Section 1 of this application

☐ RA is **not** the property owner of the remediation site identified in Section 1 of this application

Property Owner's Name: Mr./Ms. _____ _____ Title: _____

Company: _____

Street Address: _____ P.O. Box: _____

City: _____ State: _____ Zip Code: _____ Phone: _____

I hereby certify that the RA has my permission to enroll the site identified in Section 1 of this application into the Illinois EPA Site Remediation Program. I certify that the RA and designated representatives have permission to enter the indicated premises for the pupose of conducting remedial investigations or activities.

Any person who knowingly makes a false, fictitious, or fraudulent material statement, orally or in writing, to the Illinois EPA commits a Class 4 felony. A second or subsequent conviction is a Class 3 felony. (415 ILCS 5/44(h)).

_____ _____

Owner's Signature: Date:

For multiple property owners, attach additional sheets containing all the information above along with a signed, dated certification for each.

V. Advance Partial Payment:

The RA shall select one of the following advance partial payment plans:

☑ Plan 1: A $500 advance partial payment is included with this application. Please make the check payable to: Illinois Environmental Protection Agency". Please include "For Deposit in the Hazardous Waste Fund" and the Remedation Applicant's FEIN or SSN on the check; or

☐ Plan 2: Request that the Illinois EPA determine the appropriate partial payment (i.e., approximately one-half of the total anticipated costs of the Illinois EPA, not to exceed $5,000). A completed DRM-3 form ("Request for Assessment of Advance Partial Payment for Anticipated Services") must accompany this application so that the Illinois EPA may determine the appropriate advance partial payment specific to the services requested.

If this application contains plans and reports for review and evaluation by the Illinois EPA, a completed DRM-2 Form must also accompany this submittal.

The Illinois EPA is authorized to require this information under Section 415 ILCS 5/58 - 58.12 of the Environmental Protection Act and regulations promulgated thereunder. Disclosure of this information is required as a condition of participation in the Site Remediation Program. Failure to do so may prevent this form from being processed and could result in your application being rejected. This form has been approved by the Forms Management Center. All information submitted as part of this application is available to the public except when specifically designated by the RA to be treated confidentially as a trade secret or secret process in accordance with the Illinois Compiled Statutes, Section 7(a) of the Environmental Protection Act, applicable Rules and Regulations of the Illinois Pollution Control Board and applicable Illinois EPA rules and guidelines.

Legend

Approximate Remediation Site Boundary

Site Location	
Township	38N
Range	14E
Section	33

Project Mngr	RMO
Drawn By	SDM
Checked By	MAC
Approved By	MAC
Project No.	A215700
Scale	AS SHOWN
Revised By	
Date	January 21, 2015

Terracon
Consulting Engineers and Scientists
650 W. LAKE ST., SUITE 400 CHICAGO, ILLINOIS 60661
Ph: (312) 575-9614 Fax: (312) 575-0111

SITE BASE MAP

650 WEST 83RD STREET
CHICAGO, COOK COUNTY, ILLINOIS

EXHIBIT 1

Illinois Environmental Protection Agency

1021 N. Grand Avenue East, P.O. Box 19276, Springfield, Illinois 62794-9276 - (217)782-2829

Bruce Rauner, Governor Lisa Bonnett, Director

217/785-3300

CERTIFIED MAIL

7012 0470 0001 2969 0419

February 9, 2015

Kimberly Worthington
City of Chicago, Dept of Fleet & Facililty Management
30 North LaSalle Street, 3rd Floor
Chicago, IL 60602-2575

Re: 0316715228 -- Cook County
Chicago / City of Chicago-Dept of Fleet Mgmt/Old City Pound
Site Remediation/Technical Reports

Dear Ms. Worthington:

On February 9, 2015, your completed Site Remediation Program Application and Services Agreement was received by the Illinois Environmental Protection Agency ("Illinois EPA"), together with an advance partial payment in the amount of $500. The Illinois EPA project manager assigned to provide review and evaluation services for this project is Tim Murphy. All routine project communications, correspondence and documents should be directed to the project manager to ensure the quickest possible response. Mr. Tim Murphy is available at (217) 524-4823 or by e-mail at Tim.Murphy@illinois.gov. Enrollment information on this site and all others entered in the Site Remediation Program is available at http://epadata.epa.state.il.us/land/srp.

In accordance with 35 Illinois Administrative Code Part 740, Section 740.210(c)(4), the Remediation Applicant has agreed to pay any reasonable costs incurred and documented by the Agency in providing review and evaluation services. If you prefer to remit these payments by electronic funds transfer, please complete the attached Electronic Funds Transfer Request Form and submit it to the address listed on the form. Once the information on the form is reviewed and approved by the State of Illinois Comptroller's Office, a confirmation will be returned to you.

Welcome to the Illinois EPA's Site Remediation Program. We look forward to completing this project with you and extend our full cooperation and assistance. Please visit our web page at www.epa.state.il.us/land/cleanup-programs for additional information concerning the Site Remediation Program.

Sincerely,

P.J. Gebhardt
Remedial Project Management Section
Site Remediation Program
Division of Remediation Management
Bureau of Land

cc: Richard O'Brien, P.E.
Terracon
650 West Lake Street, Suite 420
Chicago, IL 60661

Bureau of Land File

Tim Murphy

APPENDIX B
SOIL BORING & MONITORING WELL LOGS

GENERAL NOTES

DESCRIPTION OF SYMBOLS AND ABBREVIATIONS

SAMPLING

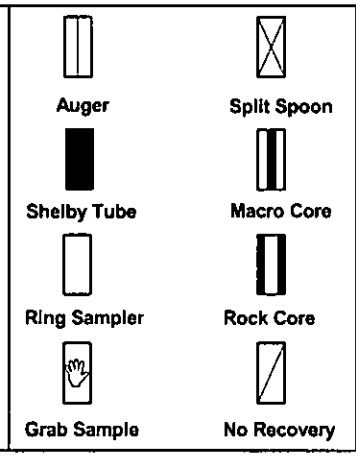

WATER LEVEL

Water levels indicated on the soil boring logs are the levels measured in the borehole at the times indicated. Groundwater level variations will occur over time. In low permeability soils, accurate determination of groundwater levels is not possible with short term water level observations.

FIELD TESTS

(HP)	Hand Penetrometer
(T)	Torvane
(b/f)	Standard Penetration Test (blows per foot)
(PID)	Photo-Ionization Detector
(OVA)	Organic Vapor Analyzer

DESCRIPTIVE SOIL CLASSIFICATION

Soil classification is based on the Unified Soil Classification System. Coarse Grained Soils have more than 50% of their dry weight retained on a #200 sieve; their principal descriptors are: boulders, cobbles, gravel or sand. Fine Grained Soils have less than 50% of their dry weight retained on a #200 sieve; they are principally described as clays if they are plastic, and silts if they are slightly plastic or non-plastic. Major constituents may be added as modifiers and minor constituents may be added according to the relative proportions based on grain size. In addition to gradation, coarse-grained soils are defined on the basis of their in-place relative density and fine-grained soils on the basis of their consistency.

LOCATION AND ELEVATION NOTES

Unless otherwise noted, Latitude and Longitude are approximately determined using a hand-held GPS device. The accuracy of such devices is variable. Surface elevation data annotated with +/- indicates that no actual topographical survey was conducted to confirm the surface elevation. Instead, the surface elevation was approximately determined from topographic maps of the area.

STRENGTH TERMS

RELATIVE DENSITY OF COARSE-GRAINED SOILS (More than 50% retained on No. 200 sieve.) Density determined by Standard Penetration Resistance Includes gravels, sands and silts.			CONSISTENCY OF FINE-GRAINED SOILS (50% or more passing the No. 200 sieve.) Consistency determined by laboratory shear strength testing, field visual-manual procedures or standard penetration resistance			
Descriptive Term (Density)	Standard Penetration or N-Value Blows/Ft.	Ring Sampler Blows/Ft.	Descriptive Term (Consistency)	Unconfined Compressive Strength, Qu, psf	Standard Penetration or N-Value Blows/Ft.	Ring Sampler Blows/Ft.
Very Loose	0 - 3	0 - 6	Very Soft	less than 500	0 - 1	< 3
Loose	4 - 9	7 - 18	Soft	500 to 1,000	2 - 4	3 - 4
Medium Dense	10 - 29	19 - 58	Medium-Stiff	1,000 to 2,000	4 - 8	5 - 9
Dense	30 - 50	59 - 98	Stiff	2,000 to 4,000	8 - 15	10 - 18
Very Dense	> 50	≥ 99	Very Stiff	4,000 to 8,000	15 - 30	19 - 42
			Hard	> 8,000	> 30	> 42

RELATIVE PROPORTIONS OF SAND AND GRAVEL

Descriptive Term(s) of other constituents	Percent of Dry Weight
Trace	< 15
With	15 - 29
Modifier	> 30

GRAIN SIZE TERMINOLOGY

Major Component of Sample	Particle Size
Boulders	Over 12 in. (300 mm)
Cobbles	12 in. to 3 in. (300mm to 75mm)
Gravel	3 in. to #4 sieve (75mm to 4.75 mm)
Sand	#4 to #200 sieve (4.75mm to 0.075mm
Silt or Clay	Passing #200 sieve (0.075mm)

RELATIVE PROPORTIONS OF FINES

Descriptive Term(s) of other constituents	Percent of Dry Weight
Trace	< 5
With	5 - 12
Modifier	> 12

PLASTICITY DESCRIPTION

Term	Plasticity Index
Non-plastic	0
Low	1 - 10
Medium	11 - 30
High	> 30

UNIFIED SOIL CLASSIFICATION SYSTEM

Criteria for Assigning Group Symbols and Group Names Using Laboratory Tests[A]					Soil Classification	
					Group Symbol	Group Name[B]
Coarse Grained Soils More than 50% retained on No. 200 sieve	Gravels More than 50% of coarse fraction retained on No. 4 sieve	Clean Gravels Less than 5% fines[C]	$Cu \geq 4$ and $1 \leq Cc \leq 3$[E]		GW	Well-graded gravel[F]
			$Cu < 4$ and/or $1 > Cc > 3$[E]		GP	Poorly graded gravel[F]
		Gravels with Fines More than 12% fines[C]	Fines classify as ML or MH		GM	Silty gravel[F,G,H]
			Fines classify as CL or CH		GC	Clayey gravel[F,G,H]
	Sands 50% or more of coarse fraction passes No. 4 sieve	Clean Sands Less than 5% fines[D]	$Cu \geq 6$ and $1 \leq Cc \leq 3$[E]		SW	Well-graded sand[I]
			$Cu < 6$ and/or $1 > Cc > 3$[E]		SP	Poorly graded sand[I]
		Sands with Fines More than 12% fines[D]	Fines classify as ML or MH		SM	Silty sand[G,H,I]
			Fines Classify as CL or CH		SC	Clayey sand[G,H,I]
Fine-Grained Soils 50% or more passes the No. 200 sieve	Silts and Clays Liquid limit less than 50	inorganic	PI > 7 and plots on or above "A" line[J]		CL	Lean clay[K,L,M]
			PI < 4 or plots below "A" line[J]		ML	Silt[K,L,M]
		organic	Liquid limit - oven dried / Liquid limit - not dried	< 0.75	OL	Organic clay[K,L,M,N] / Organic silt[K,L,M,O]
	Silts and Clays Liquid limit 50 or more	inorganic	PI plots on or above "A" line		CH	Fat clay[K,L,M]
			PI plots below "A" line		MH	Elastic Silt[K,L,M]
		organic	Liquid limit - oven dried / Liquid limit - not dried	< 0.75	OH	Organic clay[K,L,M,P] / Organic silt[K,L,M,Q]
Highly organic soils	Primarily organic matter, dark in color, and organic odor				PT	Peat

[A] Based on the material passing the 3-in. (75-mm) sieve

[B] If field sample contained cobbles or boulders, or both, add "with cobbles or boulders, or both" to group name.

[C] Gravels with 5 to 12% fines require dual symbols: GW-GM well-graded gravel with silt, GW-GC well-graded gravel with clay, GP-GM poorly graded gravel with silt, GP-GC poorly graded gravel with clay.

[D] Sands with 5 to 12% fines require dual symbols: SW-SM well-graded sand with silt, SW-SC well-graded sand with clay, SP-SM poorly graded sand with silt, SP-SC poorly graded sand with clay

[E] $Cu = D_{60}/D_{10}$ $\quad Cc = \dfrac{(D_{30})^2}{D_{10} \times D_{60}}$

[F] If soil contains ≥ 15% sand, add "with sand" to group name.

[G] If fines classify as CL-ML, use dual symbol GC-GM, or SC-SM.

[H] If fines are organic, add "with organic fines" to group name.

[I] If soil contains ≥ 15% gravel, add "with gravel" to group name.

[J] If Atterberg limits plot in shaded area, soil is a CL-ML, silty clay.

[K] If soil contains 15 to 29% plus No. 200, add "with sand" or "with gravel," whichever is predominant.

[L] If soil contains ≥ 30% plus No. 200 predominantly sand, add "sandy" to group name.

[M] If soil contains ≥ 30% plus No. 200, predominantly gravel, add "gravelly" to group name.

[N] PI ≥ 4 and plots on or above "A" line.

[O] PI < 4 or plots below "A" line.

[P] PI plots on or above "A" line.

[Q] PI plots below "A" line.

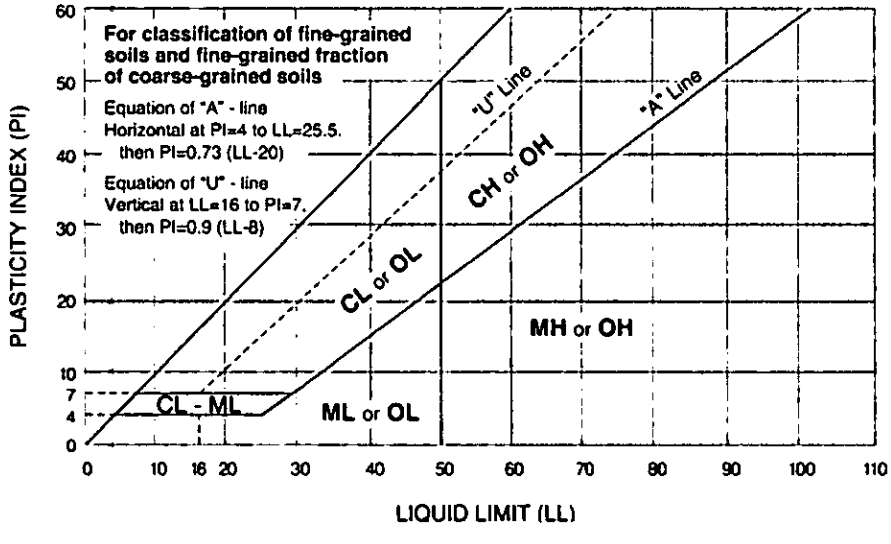

Terracon

BORING LOG NO. B-1

PROJECT: 650 W 83rd St. Phase II

CLIENT: City of Chicago 2FM
Chicago, Illinois

SITE: 650 West 83rd Street
Chicago, Illinois

LOCATION See Exhbit A-2

DEPTH	MATERIAL DESCRIPTION	DEPTH (ft)	WATER LEVEL OBSERVATIONS	SAMPLE TYPE	RECOVERY (in.)	OVA/PID (ppm)	SAMPLE NUMBER	SAMPLE SENT TO LAB (ID NUMBER)
	FILL - SILTY CLAY, trace sand, gravel, glass and brick, dark brown, moist, soft					*ND		B-1 (1'-3')
					30	*ND	1	
5.0						*ND		B-1 (4'-6')
	GRAVEL, trace sand and clay, coarse grained, brown, wet (fill)	5	▽		24	*ND	2	
8.0						*ND		
	SILTY CLAY (CL-ML), trace sand and gravel, gray, moist, soft	10			42	*ND	3	
						*ND		
16.0		15			48	*ND	4	
	Boring Terminated at 16 Feet							

The stratification lines represent the approximate transition between differing soil types and/or rock types; in-situ these transitions may be gradual or may occur at different depths than shown.

* ND indicates a reading of less than the field detection limit (FDL) of one (1) part per million isobutylene equivalents (ppmi).

Advancement Method:
Direct Push

Abandonment Method:
Boring backfilled with soil cuttings upon completion.

See Appendices for description of field procedures.
See Appendices for description of laboratory procedures and additional data (if any).
See Appendices for explanation of symbols and abbreviations.

Notes:

WATER LEVEL OBSERVATIONS

▽ *7' while sampling*

Terracon
650 West Lake Street, Suite 420
Chicago, Illinois

Boring Started: 6/27/2013 | Boring Completed: 6/27/2013
Drill Rig: GEO PROBE | Driller: Enviro Dynamics
Project No.: A2137008

THIS BORING LOG IS NOT VALID IF SEPARATED FROM ORIGINAL REPORT. ENVIRONMENTAL SMART LOG A2137008.GPJ ENV STANDARD 2012.GDT 7/11/13

BORING LOG NO. B-2

PROJECT: 650 W 83rd St. Phase II

CLIENT: City of Chicago 2FM
Chicago, Illinois

SITE: 650 West 83rd Street
Chicago, Illinois

LOCATION See Exhbit A-2

DEPTH	MATERIAL DESCRIPTION	DEPTH (ft)	WATER LEVEL OBSERVATIONS	SAMPLE TYPE	RECOVERY (In.)	OVA/PID (ppm)	SAMPLE NUMBER	SAMPLE SENT TO LAB (ID NUMBER)
	FILL - SILTY CLAY, trace sand, gravel, glass and brick, brown, moist, stiff					*ND		B-2 (1'-3')
					34	3.8	1	
4.0								
	SILTY CLAY (CL-ML), trace sand and gravel, brown, moist, stiff	5				*ND		B-2 (6'-8')
					42	*ND	2	
	gray, moist, soft		▽			*ND		
		10			30	*ND	3	
						*ND		
		15			33	*ND	4	
16.0								
	Boring Terminated at 16 Feet							

The stratification lines represent the approximate transition between differing soil types and/or rock types; in-situ these transitions may be gradual or may occur at different depths than shown.

* ND indicates a reading of less than the field detection limit (FDL) of one (1) part per million isobutylene equivalents (ppmi).

Advancement Method:
Direct Push

Abandonment Method:
Boring backfilled with soil cuttings upon completion.

See Appendices for description of field procedures.
See Appendices for description of laboratory procedures and additional data (if any).
See Appendices for explanation of symbols and abbreviations.

Notes:

WATER LEVEL OBSERVATIONS

▽ *8' while sampling*

Terracon
650 West Lake Street, Suite 420
Chicago, Illinois

Boring Started: 6/27/2013 | Boring Completed: 6/27/2013
Drill Rig: GEO PROBE | Driller: Enviro Dynamics
Project No.: A2137008

THIS BORING LOG IS NOT VALID IF SEPARATED FROM ORIGINAL REPORT. ENVIRONMENTAL SMART LOG A2137008.GPJ ENV STANDARD 2012.GDT 7/11/13

BORING LOG NO. B-3

PROJECT: 650 W 83rd St. Phase II

CLIENT: City of Chicago 2FM
Chicago, Illinois

SITE: 650 West 83rd Street
Chicago, Illinois

LOCATION See Exhbit A-2

DEPTH	MATERIAL DESCRIPTION	DEPTH (ft)	WATER LEVEL OBSERVATIONS	SAMPLE TYPE	RECOVERY (in.)	OVA/PID (ppm)	SAMPLE NUMBER	SAMPLE SENT TO LAB (ID NUMBER)
	FILL - CRUSHED CONCRETE/GRAVEL					*ND		B-3 (1'-3')
1.0	FILL - GRAVEL, trace sand, clay, glass, and brick, coarse grained, black, moist				30	*ND	1	
		5				*ND		B-3 (4'-6')
6.0					40	*ND	2	
7.0	FILL - SAND, trace gravel, fine grained, black, wet		▽					
	SILTY CLAY (CL-ML), trace sand and gravel, gray, moist, soft					*ND		
		10			30	*ND	3	
						*ND		
16.0		15			48	*ND	4	
	Boring Terminated at 16 Feet							

The stratification lines represent the approximate transition between differing soil types and/or rock types: in-situ these transitions may be gradual or may occur at different depths than shown.

* ND indicates a reading of less than the field detection limit (FDL) of one (1) part per million isobutylene equivalents (ppmi).

Advancement Method:
Direct Push

Abandonment Method:
Boring backfilled with soil cuttings upon completion.

See Appendices for description of field procedures.
See Appendices for description of laboratory procedures and additional data (if any).
See Appendices for explanation of symbols and abbreviations.

Notes:

WATER LEVEL OBSERVATIONS

▽ *7' while sampling*

Terracon
650 West Lake Street, Suite 420
Chicago, Illinois

Boring Started: 6/27/2013 | Boring Completed: 6/27/2013
Drill Rig: GEO PROBE | Driller: Enviro Dynamics
Project No.: A2137008

THIS BORING LOG IS NOT VALID IF SEPARATED FROM ORIGINAL REPORT. ENVIRONMENTAL SMART LOG A2137008.GPJ ENV STANDARD 2012.GDT 7/11/13

BORING LOG NO. B-4

PROJECT: 650 W 83rd St. Phase II

CLIENT: City of Chicago 2FM
Chicago, Illinois

SITE: 650 West 83rd Street
Chicago, Illinois

LOCATION See Exhbit A-2

DEPTH	MATERIAL DESCRIPTION	DEPTH (ft)	WATER LEVEL OBSERVATIONS	SAMPLE TYPE	RECOVERY (in.)	OVA/PID (ppm)	SAMPLE NUMBER	SAMPLE SENT TO LAB (ID NUMBER)
	FILL - GRAVEL, trace sand, glass , and brick, coarse grained, brown, moist, loose					*ND		B-4 (1'-3')
						*ND	1	
4.0								
	FILL - SILTY CLAY (CL-ML), trace sand, gravel and wood, gray, moist, soft					*ND		B-4 (4'-6')
		5						
6.0						*ND	2	
6.5	SAND (SP), trace gravel, fine grained, gray, wet		▽					
	SILTY CLAY (CL-ML), trace sand and gravel, gray, moist, stiff					*ND		
	gray, moist, soft							
		10				*ND	3	
						*ND		
							4	
		15						
16.0								
	Boring Terminated at 16 Feet							

The stratification lines represent the approximate transition between differing soil types and/or rock types; in-situ these transitions may be gradual or may occur at different depths than shown.

* ND indicates a reading of less than the field detection limit (FDL) of one (1) part per million isobutylene equivalents (ppmi).

Advancement Method:
Direct Push

Abandonment Method:
Boring backfilled with soil cuttings upon completion.

See Appendices for description of field procedures.
See Appendices for description of laboratory procedures and additional data (if any).
See Appendices for explanation of symbols and abbreviations.

Notes:

WATER LEVEL OBSERVATIONS

▽ 7' while sampling

Terracon
650 West Lake Street, Suite 420
Chicago, Illinois

Boring Started: 6/27/2013 | Boring Completed: 6/27/2013
Drill Rig: GEO PROBE | Driller: Enviro Dynamics
Project No.: A2137008

THIS BORING LOG IS NOT VALID IF SEPARATED FROM ORIGINAL REPORT. ENVIRONMENTAL SMART LOG A2137008.GPJ ENV STANDARD 2012.GDT 7/11/13

WELL LOG NO. B-5/MW-5

PROJECT: 650 W 83rd St. Phase II

CLIENT: City of Chicago 2FM
Chicago, Illinois

SITE: 650 West 83rd Street
Chicago, Illinois

DEPTH	MATERIAL DESCRIPTION	ELEVATION (Ft.)	INSTALLATION DETAILS	DEPTH (ft)	WATER LEVEL OBSERVATIONS	SAMPLE TYPE	RECOVERY (In.)	OVA/PID (ppm)	SAMPLE NUMBER	SAMPLE SENT TO LAB (ID NUMBER)
	LOCATION See Exhibit A-2 Surface Elev.: 98.94 (Ft.)		Well Completion:							
	FILL - SILTY CLAY, trace sand, gravel, crushed stone, glass and brick fragments, dark gray		Bentonite				30	*ND *ND	1	B-5 (1'-3')
4.0		95								
	FILL - CRUSHED GRAVEL, trace sand, brick, cinders, coarse grained, black, wet		Sand Filter	5			32	*ND *ND	2	B-5 (4'-6')
7.7		91								
	SAND (SP), fine grained, brown, wet						48	*ND *ND	3	
10.0		89		10						
	SILTY CLAY (CL-ML), trace sand and gravel, gray, soft		Screen				48	*ND *ND	4	
16.0		83		15						
	Boring Terminated at 16 Feet									
	2" well drilled									

The stratification lines represent the approximate transition between differing soil types and/or rock types; in-situ these transitions may be gradual or may occur at different depths than shown.

* ND indicates a reading of less than the field detection limit (FDL) of one (1) part per million isobutylene equivalents (ppmi).

Advancement Method:
Direct Push

Abandonment Method:
Boring backfilled with soil cuttings upon completion.

See Appendices for description of field procedures.
See Appendices for description of laboratory procedures and additional data (if any).
See Appendices for explanation of symbols and abbreviations.

Notes:
Top of Casing Elevation: 100.19'
Groundwater Elevation: 93.29'

WATER LEVEL OBSERVATIONS

- 7' while sampling
- 5.19' on 6/28/13
- 6.90 below TOC on 7/19/13

Terracon
650 West Lake Street, Suite 420
Chicago, Illinois

Well Started: 6/25/2013
Well Completed: 6/25/2013
Drill Rig: GEO PROBE
Driller: Enviro Dynamics
Project No.: A2137008

THIS BORING LOG IS NOT VALID IF SEPARATED FROM ORIGINAL REPORT. ENVIRONMENTAL SMART LOG A2137008.GPJ ENV STANDARD 2012.GDT 7/11/13

BORING LOG NO. B-6

PROJECT: 650 W 83rd St. Phase II

CLIENT: City of Chicago 2FM
Chicago, Illinois

SITE: 650 West 83rd Street
Chicago, Illinois

LOCATION See Exhbit A-2

DEPTH	MATERIAL DESCRIPTION	DEPTH (ft)	WATER LEVEL OBSERVATIONS	SAMPLE TYPE	RECOVERY (In.)	OVA/PID (ppm)	SAMPLE NUMBER	SAMPLE SENT TO LAB (ID NUMBER)
	FILL - SILTY CLAY, trace sand, gravel, glass and brick, brown, loose					*ND		B-6 (1'-3')
					34	*ND	1	
4.0								
	FILL - CRUSHED STONE, trace sand and cinders, black	5				*ND		B-6 (6'-8')
					29	*ND	2	
6.5								
	SAND (SP), fine grained, brown, wet		▽			*ND		
		10			32	*ND	3	
11.0								
	SILTY CLAY (CL-ML), trace sand and gravel, gray, moist, soft					*ND		
					48	*ND	4	
		15						
16.0								
	Boring Terminated at 16 Feet							

The stratification lines represent the approximate transition between differing soil types and/or rock types; in-situ these transitions may be gradual or may occur at different depths than shown.

* ND indicates a reading of less than the field detection limit (FDL) of one (1) part per million isobutylene equivalents (ppmi).

Advancement Method:
Direct Push

Abandonment Method:
Boring backfilled with soil cuttings upon completion.

See Appendices for description of field procedures.
See Appendices for description of laboratory procedures and additional data (if any).
See Appendices for explanation of symbols and abbreviations.

Notes:

WATER LEVEL OBSERVATIONS

▽ *8' while sampling*

Terracon
650 West Lake Street, Suite 420
Chicago, Illinois

Boring Started: 6/25/2013 | Boring Completed: 6/25/2013
Drill Rig: GEO PROBE | Driller: Enviro Dynamics
Project No.: A2137008

THIS BORING LOG IS NOT VALID IF SEPARATED FROM ORIGINAL REPORT. ENVIRONMENTAL SMART LOG A2137008.GPJ ENV STANDARD 2012.GDT 7/11/13

BORING LOG NO. B-7

PROJECT: 650 W 83rd St. Phase II

CLIENT: City of Chicago 2FM
Chicago, Illinois

SITE: 650 West 83rd Street
Chicago, Illinois

LOCATION See Exhbit A-2

DEPTH	MATERIAL DESCRIPTION	SAMPLE TYPE	RECOVERY (In.)	OVA/PID (ppm)	SAMPLE NUMBER	SAMPLE SENT TO LAB (ID NUMBER)
	FILL - GRAVEL, trace sand and clay, coarse grained, dark brown, moist, loose			*ND		B-7 (1'-3')
			33	*ND	1	
				*ND		B-7 (4'-6')
6.0	**SAND (SP)**, trace gravel, fine grained, brown, wet		27	*ND	2	
				*ND		
10.0	**SILTY CLAY (CL-ML)**, trace sand and gravel, gray, moist, soft		48	*ND	3	
				*ND		
16.0			48	*ND	4	
	Boring Terminated at 16 Feet					

DEPTH (ft): 5, 10, 15

WATER LEVEL OBSERVATIONS: ▽

The stratification lines represent the approximate transition between differing soil types and/or rock types; in-situ these transitions may be gradual or may occur at different depths than shown.

* ND indicates a reading of less than the field detection limit (FDL) of one (1) part per million isobutylene equivalents (ppmi).

Advancement Method:
Direct Push

Abandonment Method:
Boring backfilled with soil cuttings upon completion.

See Appendices for description of field procedures.
See Appendices for description of laboratory procedures and additional data (if any).
See Appendices for explanation of symbols and abbreviations.

Notes:

WATER LEVEL OBSERVATIONS

▽ *7' while sampling*

Terracon
650 West Lake Street, Suite 420
Chicago, Illinois

Boring Started: 6/27/2013 | Boring Completed: 6/27/2013
Drill Rig: GEO PROBE | Driller: Enviro Dynamics
Project No.: A2137008

THIS BORING LOG IS NOT VALID IF SEPARATED FROM ORIGINAL REPORT. ENVIRONMENTAL SMART LOG A2137008.GPJ ENV STANDARD 2012.GDT 7/11/13

BORING LOG NO. B-8

PROJECT: 650 W 83rd St. Phase II

CLIENT: City of Chicago 2FM
Chicago, Illinois

SITE: 650 West 83rd Street
Chicago, Illinois

LOCATION See Exhbit A-2

DEPTH	MATERIAL DESCRIPTION	DEPTH (ft)	WATER LEVEL OBSERVATIONS	SAMPLE TYPE	RECOVERY (in.)	OVA/PID (ppm)	SAMPLE NUMBER	SAMPLE SENT TO LAB (ID NUMBER)
	FILL - GRAVEL, trace sand, glass , brick, and clay, coarse grained, black, moist, loose					*ND		B-8 (1'-3')
					30	*ND	1	
						*ND		B-8 (4'-6')
6.0		5			30	*ND	2	
	SAND (SP), fine grained, brown, wet		▽					
8.0						*ND		
	SILTY CLAY (CL-ML), trace sand and gravel, gray, moist, soft	10			48	*ND	3	
						*ND		
16.0		15			48	*ND	4	
	Boring Terminated at 16 Feet							

The stratification lines represent the approximate transition between differing soil types and/or rock types; in-situ these transitions may be gradual or may occur at different depths than shown.

* ND indicates a reading of less than the field detection limit (FDL) of one (1) part per million isobutylene equivalents (ppmi).

Advancement Method:
Direct Push

Abandonment Method:
Boring backfilled with soil cuttings upon completion.

See Appendices for description of field procedures.
See Appendices for description of laboratory procedures and additional data (if any).
See Appendices for explanation of symbols and abbreviations.

Notes:

WATER LEVEL OBSERVATIONS

▽ *7' while sampling*

Terracon
650 West Lake Street, Suite 420
Chicago, Illinois

Boring Started: 6/26/2013 | Boring Completed: 6/26/2013
Drill Rig: GEO PROBE | Driller: Enviro Dynamics
Project No.: A2137008

THIS BORING LOG IS NOT VALID IF SEPARATED FROM ORIGINAL REPORT. ENVIRONMENTAL SMART LOG A2137008.GPJ ENV STANDARD 2012.GDT 7/11/13

BORING LOG NO. B-9

PROJECT: 650 W 83rd St. Phase II

CLIENT: City of Chicago 2FM
Chicago, Illinois

SITE: 650 West 83rd Street
Chicago, Illinois

GRAPHIC LOG	DEPTH	MATERIAL DESCRIPTION	DEPTH (ft)	WATER LEVEL OBSERVATIONS	SAMPLE TYPE	RECOVERY (In.)	OVA/PID (ppm)	SAMPLE NUMBER	SAMPLE SENT TO LAB (ID NUMBER)
		LOCATION See Exhbit A-2							
		FILL - GRAVEL, trace sand, brick and glass, coarse grained, black					*ND		B-9 (1'-3')
						36	7.7	1	
		weak Kerosene odor	5				*ND		B-9 (4'-6')
	6.0								
		SAND (SP), fine grained, brown, wet		▽		21	*ND	2	
	8.0								
		SILTY CLAY (CL-ML), trace sand and gravel, gray, medium stiff					*ND		
			10			46	*ND	3	
							*ND		
						46	*ND	4	
	16.0		15						
		Boring Terminated at 16 Feet							

The stratification lines represent the approximate transition between differing soil types and/or rock types; in-situ these transitions may be gradual or may occur at different depths than shown.

* ND indicates a reading of less than the field detection limit (FDL) of one (1) part per million isobutylene equivalents (ppmi).

Advancement Method:
Direct Push

Abandonment Method:
Boring backfilled with soil cuttings upon completion.

See Appendices for description of field procedures.
See Appendices for description of laboratory procedures and additional data (if any).
See Appendices for explanation of symbols and abbreviations.

Notes:

WATER LEVEL OBSERVATIONS

▽ *7' while sampling*

Terracon
650 West Lake Street, Suite 420
Chicago, Illinois

Boring Started: 6/26/2013 | Boring Completed: 6/26/2013
Drill Rig: GEO PROBE | Driller: Enviro Dynamics
Project No.: A2137008

THIS BORING LOG IS NOT VALID IF SEPARATED FROM ORIGINAL REPORT. ENVIRONMENTAL SMART LOG A2137008.GPJ ENV STANDARD 2012.GDT 7/11/13

WELL LOG NO. B-10/MW-10

PROJECT: 650 W 83rd St. Phase II

CLIENT: City of Chicago 2FM
Chicago, Illinois

SITE: 650 West 83rd Street
Chicago, Illinois

LOCATION See Exhibit A-2

Surface Elev.: 98.01 (Ft.)

DEPTH	MATERIAL DESCRIPTION	ELEVATION (Ft.)
0.0	**FILL - CRUSHED STONE**, trace sand, glass, and brick, coarse grained, black, moist	
2.0	**FILL - SILTY CLAY**, trace sand and gravel, dark brown, moist, stiff weak fuel odor @ 3'	96
4.0	**FILL - CRUSHED GRAVEL**, trace sand, cinders and brick, coarse grained, black, moist	94
6.0	**SAND (SP)**, fine grained, brown, wet	92
8.0	**SILTY CLAY (CL-ML)**, trace sand and gravel, gray, soft	90
16.0	*Boring Terminated at 16 Feet*	82

INSTALLATION DETAILS: Well Completion: Bentonite; Sand Filter; Screen

DEPTH (ft)	WATER LEVEL OBSERVATIONS	SAMPLE TYPE	RECOVERY (In.)	OVA/PID (ppm)	SAMPLE NUMBER	SAMPLE SENT TO LAB (ID NUMBER)
	▽			*ND		B-10 (1'-3')
			40	12.2	1	
				*ND		B-10 (4'-6')
5			38	*ND	2	
	▽			*ND		
10			46	*ND	3	
				*ND		
15			46	*ND	4	

The stratification lines represent the approximate transition between differing soil types and/or rock types; in-situ these transitions may be gradual or may occur at different depths than shown.

* ND indicates a reading of less than the field detection limit (FDL) of one (1) part per million isobutylene equivalents (ppmi).

Advancement Method:
Direct Push

Abandonment Method:
Boring backfilled with soil cuttings upon completion.

See Appendices for description of field procedures.
See Appendices for description of laboratory procedures and additional data (if any).
See Appendices for explanation of symbols and abbreviations.

Notes:
Top of Casing Elevation: 100.02'
Groundwater Elevation: 92.81'
1" diameter well

WATER LEVEL OBSERVATIONS

▽ *7' while sampling*
▽ *1.5' on 6/28/13*
7.21 below TOC on 7/19/13

Terracon
650 West Lake Street, Suite 420
Chicago, Illinois

Well Started: 6/25/2013
Well Completed: 6/25/2013
Drill Rig: GEO PROBE
Driller: Enviro Dynamics
Project No.: A2137008

THIS BORING LOG IS NOT VALID IF SEPARATED FROM ORIGINAL REPORT. ENVIRONMENTAL SMART LOG A2137008.GPJ ENV STANDARD 2012.GDT 7/11/13

BORING LOG NO. B-11

PROJECT: 650 W 83rd St. Phase II

CLIENT: City of Chicago 2FM
Chicago, Illinois

SITE: 650 West 83rd Street
Chicago, Illinois

LOCATION See Exhbit A-2

DEPTH	MATERIAL DESCRIPTION	DEPTH (ft)	WATER LEVEL OBSERVATIONS	SAMPLE TYPE	RECOVERY (In.)	OVA/PID (ppm)	SAMPLE NUMBER	SAMPLE SENT TO LAB (ID NUMBER)
0.3	**CONCRETE**, Approximately 4"							
	FILL - GRAVEL, trace sand, brick, and cinders, coarse grained, black, moist, loose				20	*ND *ND	1	B-11 (1'-3')
4.5	**SAND (SP)**, fine grained, brown, wet	5			28	*ND *ND	2	B-11 (4'-6')
6.0	**SILTY CLAY (CL-ML)**, trace sand and gravel, gray, moist, soft		▽		48	*ND *ND	3	
		10			48	*ND *ND	4	
16.0	***Boring Terminated at 16 Feet***	15						

The stratification lines represent the approximate transition between differing soil types and/or rock types; in-situ these transitions may be gradual or may occur at different depths than shown.

* ND indicates a reading of less than the field detection limit (FDL) of one (1) part per million isobutylene equivalents (ppmi).

Advancement Method:
Direct Push

Abandonment Method:
Boring backfilled with soil cuttings upon completion.

See Appendices for description of field procedures.
See Appendices for description of laboratory procedures and additional data (if any).
See Appendices for explanation of symbols and abbreviations.

Notes:

WATER LEVEL OBSERVATIONS

▽ *7' while sampling*

Terracon
650 West Lake Street, Suite 420
Chicago, Illinois

Boring Started: 6/27/2013 | Boring Completed: 6/27/2013
Drill Rig: GEO PROBE | Driller: Enviro Dynamics
Project No.: A2137008

THIS BORING LOG IS NOT VALID IF SEPARATED FROM ORIGINAL REPORT. ENVIRONMENTAL SMART LOG A2137008.GPJ ENV STANDARD 2012.GDT 7/11/13

BORING LOG NO. B-12

PROJECT: 650 W 83rd St. Phase II

CLIENT: City of Chicago 2FM
Chicago, Illinois

SITE: 650 West 83rd Street
Chicago, Illinois

LOCATION See Exhbit A-2

DEPTH	MATERIAL DESCRIPTION	DEPTH (ft)	WATER LEVEL OBSERVATIONS	SAMPLE TYPE	RECOVERY (In.)	OVA/PID (ppm)	SAMPLE NUMBER	SAMPLE SENT TO LAB (ID NUMBER)
	FILL - GRAVEL, trace sand, glass, brick, and clay, coarse grained, black, moist, loose					*ND		B-12 (1'-3')
					30	*ND	1	
						*ND		B-12 (4'-6')
6.0	**SAND (SP)**, fine grained, black to brown, wet	5	▽		30	*ND	2	
						*ND		
10.0	**SILTY CLAY (CL-ML)**, trace sand and gravel, gray, moist, soft	10			38	*ND	3	
						*ND		
16.0	***Boring Terminated at 16 Feet***	15			48	*ND	4	

The stratification lines represent the approximate transition between differing soil types and/or rock types; in-situ these transitions may be gradual or may occur at different depths than shown.

* ND indicates a reading of less than the field detection limit (FDL) of one (1) part per million isobutylene equivalents (ppmi).

Advancement Method:
Direct Push

Abandonment Method:
Boring backfilled with soil cuttings upon completion.

See Appendices for description of field procedures.
See Appendices for description of laboratory procedures and additional data (if any).
See Appendices for explanation of symbols and abbreviations.

Notes:

WATER LEVEL OBSERVATIONS

▽ *7' while sampling*

Terracon
650 West Lake Street, Suite 420
Chicago, Illinois

Boring Started: 6/28/2013 | Boring Completed: 6/28/2013
Drill Rig: GEO PROBE | Driller: Enviro Dynamics
Project No.: A2137008

THIS BORING LOG IS NOT VALID IF SEPARATED FROM ORIGINAL REPORT. ENVIRONMENTAL SMART LOG A2137008.GPJ ENV STANDARD 2012.GDT 7/11/13

BORING LOG NO. B-13

PROJECT: 650 W 83rd St. Phase II

CLIENT: City of Chicago 2FM
Chicago, Illinois

SITE: 650 West 83rd Street
Chicago, Illinois

LOCATION See Exhbit A-2

DEPTH	MATERIAL DESCRIPTION	DEPTH (ft)	WATER LEVEL OBSERVATIONS	SAMPLE TYPE	RECOVERY (In.)	OVA/PID (ppm)	SAMPLE NUMBER	SAMPLE SENT TO LAB (ID NUMBER)
	FILL - GRAVEL, trace sand, gravel, clay, wood, glass and brick, coarse grained, black, moist, loose					*ND		B-13 (1'-3')
					24	*ND	1	
5.0						*ND		B-13 (4'-6')
	FILL - SAND, trace gravel, fine grained, dark brown, wet	5	▽		28	*ND	2	
						*ND		
11.0		10			41	*ND	3	
	SILTY CLAY (CL-ML), trace sand and gravel, gray, moist, medium stiff					*ND		
					48	*ND	4	
		15				*ND		
					48	*ND	5	
	gray, moist, stiff	20				*ND		
					48	*ND	6	
24.0								
	Boring Terminated at 24 Feet							

The stratification lines represent the approximate transition between differing soil types and/or rock types; in-situ these transitions may be gradual or may occur at different depths than shown.

* ND indicates a reading of less than the field detection limit (FDL) of one (1) part per million isobutylene equivalents (ppm).

Advancement Method:
Direct Push

Abandonment Method:
Boring backfilled with soil cuttings upon completion.

See Appendices for description of field procedures.
See Appendices for description of laboratory procedures and additional data (if any).
See Appendices for explanation of symbols and abbreviations.

Notes:

WATER LEVEL OBSERVATIONS

▽ 7' while sampling

Terracon
650 West Lake Street, Suite 420
Chicago, Illinois

Boring Started: 6/28/2013 | Boring Completed: 6/28/2013
Drill Rig: GEO PROBE | Driller: Enviro Dynamics
Project No.: A2137008

THIS BORING LOG IS NOT VALID IF SEPARATED FROM ORIGINAL REPORT. ENVIRONMENTAL SMART LOG A2137008.GPJ ENV STANDARD 2012.GDT 7/16/13

BORING LOG NO. B-14

PROJECT: 650 W 83rd St. Phase II

CLIENT: City of Chicago 2FM
Chicago, Illinois

SITE: 650 West 83rd Street
Chicago, Illinois

LOCATION See Exhbit A-2

DEPTH	MATERIAL DESCRIPTION	DEPTH (ft)	WATER LEVEL OBSERVATIONS	SAMPLE TYPE	RECOVERY (In.)	OVA/PID (ppm)	SAMPLE NUMBER	SAMPLE SENT TO LAB (ID NUMBER)
	FILL - GRAVEL, trace sand, glass, brick, wood and clay, coarse grained, black, moist, loose					*ND		B-14 (1'-3')
					32	*ND	1	
		5				*ND		
					20	*ND	2	B-14 (6'-8')
8.0			▽					
	SAND (SP), fine grained, brown, wet					*ND		
10.0		10			24	*ND	3	
	SILTY CLAY (CL-ML), trace sand and gravel, gray, moist, soft					*ND		
					48	*ND	4	
16.0		15						
	Boring Terminated at 16 Feet							

The stratification lines represent the approximate transition between differing soil types and/or rock types; in-situ these transitions may be gradual or may occur at different depths than shown.

* ND indicates a reading of less than the field detection limit (FDL) of one (1) part per million isobutylene equivalents (ppmi).

Advancement Method:
Direct Push

Abandonment Method:
Boring backfilled with soil cuttings upon completion.

See Appendices for description of field procedures.
See Appendices for description of laboratory procedures and additional data (if any).
See Appendices for explanation of symbols and abbreviations.

Notes:

WATER LEVEL OBSERVATIONS

▽ *8' while sampling*

Terracon
650 West Lake Street, Suite 420
Chicago, Illinois

Boring Started: 6/27/2013 | Boring Completed: 6/27/2013

Drill Rig: GEO PROBE | Driller: Enviro Dynamics

Project No.: A2137008

THIS BORING LOG IS NOT VALID IF SEPARATED FROM ORIGINAL REPORT ENVIRONMENTAL SMART LOG A2137008.GPJ ENV STANDARD 2012.GDT 7/11/13

BORING LOG NO. B-15

PROJECT: 650 W 83rd St. Phase II

CLIENT: City of Chicago 2FM
Chicago, Illinois

SITE: 650 West 83rd Street
Chicago, Illinois

GRAPHIC LOG	DEPTH	MATERIAL DESCRIPTION	DEPTH (ft)	WATER LEVEL OBSERVATIONS	SAMPLE TYPE	RECOVERY (in.)	OVA/PID (ppm)	SAMPLE NUMBER	SAMPLE SENT TO LAB (ID NUMBER)
		LOCATION See Exhbit A-2							
		FILL - GRAVEL, trace sand, glass, brick, wood and clay, coarse grained, black, moist, loose					*ND		B-15 (1'-3')
						27	*ND	1	
		weak kerosene odor	5				*ND		B-15 (4'-6')
				▽		26	35.9	2	
	8.0								
		SAND (SP), fine grained, brown, moist					*ND		
	10.0		10			28	*ND	3	
		SILTY CLAY (CL-ML), trace sand and gravel, gray, moist, soft					*ND		
						38	*ND	4	
	16.0		15						
		Boring Terminated at 16 Feet							

The stratification lines represent the approximate transition between differing soil types and/or rock types; in-situ these transitions may be gradual or may occur at different depths than shown.

* ND indicates a reading of less than the field detection limit (FDL) of one (1) part per million isobutylene equivalents (ppmi).

Advancement Method:
Direct Push

Abandonment Method:
Boring backfilled with soil cuttings upon completion.

See Appendices for description of field procedures.
See Appendices for description of laboratory procedures and additional data (if any).
See Appendices for explanation of symbols and abbreviations.

Notes:

WATER LEVEL OBSERVATIONS

▽ *7' while sampling*

Terracon
650 West Lake Street, Suite 420
Chicago, Illinois

Boring Started: 6/27/2013 | Boring Completed: 6/27/2013
Drill Rig: GEO PROBE | Driller: Enviro Dynamics
Project No.: A2137008

THIS BORING LOG IS NOT VALID IF SEPARATED FROM ORIGINAL REPORT. ENVIRONMENTAL SMART LOG A2137008.GPJ ENV STANDARD 2012.GDT 7/11/13

BORING LOG NO. B-16

PROJECT: 650 W 83rd St. Phase II

CLIENT: City of Chicago 2FM
Chicago, Illinois

SITE: 650 West 83rd Street
Chicago, Illinois

LOCATION See Exhbit A-2

DEPTH	MATERIAL DESCRIPTION	DEPTH (ft)	WATER LEVEL OBSERVATIONS	SAMPLE TYPE	RECOVERY (in.)	OVA/PID (ppm)	SAMPLE NUMBER	SAMPLE SENT TO LAB (ID NUMBER)
	FILL - GRAVEL, trace sand, glass, brick, and clay, coarse grained, brown					20.1		B-16 (1'-3')
2.0	**FILL - SILTY CLAY**, trace sand and gravel, dark brown, stiff				24	2.5	1	
5.0	**FILL - GRAVEL**, trace sand, brick, and clay, coarse grained, black, wet	5				*ND		B-16 (4'-6')
			▽		35	*ND	2	
8.0	**SILTY CLAY (CL-ML)**, trace sand and gravel, gray, moist, soft					*ND		
		10			42	*ND	3	
						*ND		
16.0		15			48	*ND	4	
	Boring Terminated at 16 Feet							

The stratification lines represent the approximate transition between differing soil types and/or rock types; in-situ these transitions may be gradual or may occur at different depths than shown.

* ND indicates a reading of less than the field detection limit (FDL) of one (1) part per million isobutylene equivalents (ppmi).

Advancement Method:
Direct Push

Abandonment Method:
Boring backfilled with soil cuttings upon completion.

See Appendices for description of field procedures.
See Appendices for description of laboratory procedures and additional data (if any).
See Appendices for explanation of symbols and abbreviations.

Notes:

WATER LEVEL OBSERVATIONS

▽ 7' while sampling

Terracon
650 West Lake Street, Suite 420
Chicago, Illinois

Boring Started: 6/27/2013 | Boring Completed: 6/27/2013
Drill Rig: GEO PROBE | Driller: Enviro Dynamics
Project No.: A2137008

THIS BORING LOG IS NOT VALID IF SEPARATED FROM ORIGINAL REPORT. ENVIRONMENTAL SMART LOG A2137008.GPJ ENV STANDARD 2012.GDT 7/11/13

BORING LOG NO. B-17

PROJECT: 650 W 83rd St. Phase II

CLIENT: City of Chicago 2FM
Chicago, Illinois

SITE: 650 West 83rd Street
Chicago, Illinois

LOCATION See Exhbit A-2

DEPTH	MATERIAL DESCRIPTION	DEPTH (ft)	WATER LEVEL OBSERVATIONS	SAMPLE TYPE	RECOVERY (In.)	OVA/PID (ppm)	SAMPLE NUMBER	SAMPLE SENT TO LAB (ID NUMBER)
	FILL - GRAVEL, trace sand, clay, glass, brick, and cinders, coarse grained, black, moist					*ND		B-17 (1'-3')
1.3								
	FILL - SILTY CLAY, trace sand, gravel, glass and brick fragments, brown, stiff				40	*ND	1	
4.0								
	FILL - GRAVEL, trace sand, and brick, coarse grained, black, moist					*ND		B-17 (4'-6')
5.0								
	SAND (SP), fine grained, brown, wet	5	▽		30	*ND	2	
7.5								
	SILTY CLAY (CL-ML), trace sand and gravel, gray, moist, soft				46	*ND	3	
		10						
					48	*ND	4	
16.0		15						
	Boring Terminated at 16 Feet							

The stratification lines represent the approximate transition between differing soil types and/or rock types; in-situ these transitions may be gradual or may occur at different depths than shown.

* ND indicates a reading of less than the field detection limit (FDL) of one (1) part per million isobutylene equivalents (ppmi).

Advancement Method:
Direct Push

Abandonment Method:
Boring backfilled with soil cuttings upon completion.

See Appendices for description of field procedures.
See Appendices for description of laboratory procedures and additional data (if any).
See Appendices for explanation of symbols and abbreviations.

Notes:

WATER LEVEL OBSERVATIONS

▽ *7' while sampling*

Terracon
650 West Lake Street, Suite 420
Chicago, Illinois

Boring Started: 6/27/2013 | Boring Completed: 6/27/2013
Drill Rig: GEO PROBE | Driller: Enviro Dynamics
Project No.: A2137008

THIS BORING LOG IS NOT VALID IF SEPARATED FROM ORIGINAL REPORT. ENVIRONMENTAL SMART LOG A2137008.GPJ ENV STANDARD 2012.GDT 7/11/13

BORING LOG NO. B-18

PROJECT: 650 W 83rd St. Phase II

CLIENT: City of Chicago 2FM
Chicago, Illinois

SITE: 650 West 83rd Street
Chicago, Illinois

LOCATION See Exhbit A-2

DEPTH	MATERIAL DESCRIPTION	DEPTH (ft)	WATER LEVEL OBSERVATIONS	SAMPLE TYPE	RECOVERY (In.)	OVA/PID (ppm)	SAMPLE NUMBER	SAMPLE SENT TO LAB (ID NUMBER)
	FILL - GRAVEL, trace sand, brick and glass, coarse grained, black, weak odor of tar					28.2		B-18 (1'-3')
1.3								
	FILL - SILTY CLAY, trace sand and gravel, dark gray, stiff				36	*ND	1	
4.0								
	FILL - SAND, trace gravel, coarse grained, black, wet	5				*ND		B-18 (4'-6')
6.0					36	*ND	2	
	SAND (SP), fine grained, brown, wet		▽					
8.0						*ND		
	SILTY CLAY (CL-ML), trace sand and gravel, gray, medium stiff	10			48	*ND	3	
						*ND		
					48	*ND	4	
16.0		15						
	Boring Terminated at 16 Feet							

The stratification lines represent the approximate transition between differing soil types and/or rock types; in-situ these transitions may be gradual or may occur at different depths than shown.

* ND indicates a reading of less than the field detection limit (FDL) of one (1) part per million isobutylene equivalents (ppmi).

Advancement Method:
Direct Push

Abandonment Method:
Boring backfilled with soil cuttings upon completion.

See Appendices for description of field procedures.
See Appendices for description of laboratory procedures and additional data (if any).
See Appendices for explanation of symbols and abbreviations.

Notes:

WATER LEVEL OBSERVATIONS

▽ *7' while sampling*

Terracon
650 West Lake Street, Suite 420
Chicago, Illinois

Boring Started: 6/26/2013 | Boring Completed: 6/26/2013
Drill Rig: GEO PROBE | Driller: Enviro Dynamics
Project No.: A2137008

THIS BORING LOG IS NOT VALID IF SEPARATED FROM ORIGINAL REPORT ENVIRONMENTAL SMART LOG A2137008.GPJ ENV STANDARD 2012.GDT 7/11/13

BORING LOG NO. B-19

PROJECT: 650 W 83rd St. Phase II

CLIENT: City of Chicago 2FM
Chicago, Illinois

SITE: 650 West 83rd Street
Chicago, Illinois

LOCATION See Exhibit A-2

DEPTH	MATERIAL DESCRIPTION	DEPTH (ft)	WATER LEVEL OBSERVATIONS	SAMPLE TYPE	RECOVERY (in.)	OVA/PID (ppm)	SAMPLE NUMBER	SAMPLE SENT TO LAB (ID NUMBER)
1.0	FILL - GRAVEL, trace sand, glass, and brick, coarse grained, black, moist, loose					5.1		B-19 (1'-3')
3.0	FILL - SILTY CLAY, trace sand and gravel, dark gray, stiff				40	*ND	1	
6.0	FILL - GRAVEL, coarse grained, black, moist	5				*ND		B-19 (4'-6')
8.0	SAND (SP), fine grained, brown, wet		▽		36	*ND	2	
16.0	SILTY CLAY (CL-ML), trace sand and gravel, gray, moist, soft	10			48	*ND	3	
		15			48	*ND	4	
	Boring Terminated at 16 Feet							

The stratification lines represent the approximate transition between differing soil types and/or rock types; in-situ these transitions may be gradual or may occur at different depths than shown.

* ND indicates a reading of less than the field detection limit (FDL) of one (1) part per million isobutylene equivalents (ppmi).

Advancement Method:
Direct Push

Abandonment Method:
Boring backfilled with soil cuttings upon completion.

See Appendices for description of field procedures.
See Appendices for description of laboratory procedures and additional data (if any).
See Appendices for explanation of symbols and abbreviations.

Notes:

WATER LEVEL OBSERVATIONS

▽ 7' while sampling

Terracon
650 West Lake Street, Suite 420
Chicago, Illinois

Boring Started: 6/26/2013 | Boring Completed: 6/26/2013
Drill Rig: GEO PROBE | Driller: Enviro Dynamics
Project No.: A2137008

THIS BORING LOG IS NOT VALID IF SEPARATED FROM ORIGINAL REPORT. ENVIRONMENTAL SMART LOG A2137008.GPJ ENV STANDARD 2012.GDT 7/11/13

BORING LOG NO. B-20

PROJECT: 650 W 83rd St. Phase II

CLIENT: City of Chicago 2FM
Chicago, Illinois

SITE: 650 West 83rd Street
Chicago, Illinois

LOCATION See Exhbit A-2

DEPTH	MATERIAL DESCRIPTION	WATER LEVEL OBSERVATIONS	SAMPLE TYPE	RECOVERY (in.)	OVA/PID (ppm)	SAMPLE NUMBER	SAMPLE SENT TO LAB (ID NUMBER)
	FILL - GRAVEL, trace sand, and clay, coarse grained, dark brown, wet				*ND		B-20 (1'-3')
				20	*ND	1	
5		▽			*ND		B-20 (4'-6')
				28	*ND	2	
8.0	**SILTY CLAY (CL-ML)**, trace sand and gravel, gray, moist, soft				*ND		
10				46	*ND	3	
					*ND		
15				45	*ND	4	
16.0	***Boring Terminated at 16 Feet***						

The stratification lines represent the approximate transition between differing soil types and/or rock types; in-situ these transitions may be gradual or may occur at different depths than shown.

* ND indicates a reading of less than the field detection limit (FDL) of one (1) part per million isobutylene equivalents (ppmi).

Advancement Method:
Direct Push

Abandonment Method:
Boring backfilled with soil cuttings upon completion.

See Appendices for description of field procedures.
See Appendices for description of laboratory procedures and additional data (if any).
See Appendices for explanation of symbols and abbreviations.

Notes:

WATER LEVEL OBSERVATIONS

▽ 7' *while sampling*

Terracon
650 West Lake Street, Suite 420
Chicago, Illinois

Boring Started: 6/27/2013 | Boring Completed: 6/27/2013
Drill Rig: GEO PROBE | Driller: Enviro Dynamics
Project No.: A2137008

THIS BORING LOG IS NOT VALID IF SEPARATED FROM ORIGINAL REPORT. ENVIRONMENTAL SMART LOG A2137008.GPJ ENV STANDARD 2012.GDT 7/11/13

BORING LOG NO. B-21

PROJECT: 650 W 83rd St. Phase II

CLIENT: City of Chicago 2FM
Chicago, Illinois

SITE: 650 West 83rd Street
Chicago, Illinois

DEPTH	MATERIAL DESCRIPTION	DEPTH (ft)	WATER LEVEL OBSERVATIONS	SAMPLE TYPE	RECOVERY (In.)	OVA/PID (ppm)	SAMPLE NUMBER	SAMPLE SENT TO LAB (ID NUMBER)
	LOCATION See Exhibit A-2							
	FILL - GRAVEL, trace sand, brick and crushed stone, coarse grained, black, moist, loose					*ND		B-21 (1'-3')
					20	*ND	1	
						*ND		B-21 (4'-6')
6.0		5			24	*ND	2	
	SAND (SP), trace gravel and brick, fine grained, brown, wet		▽					
8.0						*ND		
	SILTY CLAY (CL-ML), trace sand and gravel, gray, moist, soft	10			48	*ND	3	
						*ND		
16.0		15			48	*ND	4	
	Boring Terminated at 16 Feet							

The stratification lines represent the approximate transition between differing soil types and/or rock types; in-situ these transitions may be gradual or may occur at different depths than shown.

* ND indicates a reading of less than the field detection limit (FDL) of one (1) part per million isobutylene equivalents (ppmi).

Advancement Method:
Direct Push

Abandonment Method:
Boring backfilled with soil cuttings upon completion.

See Appendices for description of field procedures.
See Appendices for description of laboratory procedures and additional data (if any).
See Appendices for explanation of symbols and abbreviations.

Notes:

WATER LEVEL OBSERVATIONS

▽ 7' while sampling

Terracon
650 West Lake Street, Suite 420
Chicago, Illinois

Boring Started: 6/27/2013 | Boring Completed: 6/27/2013
Drill Rig: GEO PROBE | Driller: Enviro Dynamics
Project No.: A2137008

THIS BORING LOG IS NOT VALID IF SEPARATED FROM ORIGINAL REPORT. ENVIRONMENTAL SMART LOG A2137008.GPJ ENV STANDARD 2012.GDT 7/11/13

BORING LOG NO. B-22

PROJECT: 650 W 83rd St. Phase II

CLIENT: City of Chicago 2FM
Chicago, Illinois

SITE: 650 West 83rd Street
Chicago, Illinois

LOCATION See Exhbit A-2

DEPTH	MATERIAL DESCRIPTION	DEPTH (ft)	WATER LEVEL OBSERVATIONS	SAMPLE TYPE	RECOVERY (In.)	OVA/PID (ppm)	SAMPLE NUMBER	SAMPLE SENT TO LAB (ID NUMBER)
	FILL - GRAVEL, trace sand, glass, brick, wood and cinders, coarse grained, black, wet					*ND		B-22 (1'-3') (hold)
					32	*ND	1	
						*ND		B-22 (4'-6') (hold)
		5			22	*ND	2	
7.0			▽					
	SAND (SP), fine grained, brown, wet					*ND		
10.0					40	*ND	3	
	SILTY CLAY (CL-ML), trace sand and gravel, gray, moist, soft	10						
						*ND		
					48	*ND	4	
16.0		15						
	Boring Terminated at 16 Feet							

The stratification lines represent the approximate transition between differing soil types and/or rock types; in-situ these transitions may be gradual or may occur at different depths than shown.

* ND indicates a reading of less than the field detection limit (FDL) of one (1) part per million isobutylene equivalents (ppmi).

Advancement Method:
Direct Push

Abandonment Method:
Boring backfilled with soil cuttings upon completion.

See Appendices for description of field procedures.
See Appendices for description of laboratory procedures and additional data (if any).
See Appendices for explanation of symbols and abbreviations.

Notes:

WATER LEVEL OBSERVATIONS

▽ 7' while sampling

Terracon
650 West Lake Street, Suite 420
Chicago, Illinois

Boring Started: 6/28/2013 | Boring Completed: 6/28/2013
Drill Rig: GEO PROBE | Driller: Enviro Dynamics
Project No.: A2137008

THIS BORING LOG IS NOT VALID IF SEPARATED FROM ORIGINAL REPORT. ENVIRONMENTAL SMART LOG A2137008.GPJ ENV STANDARD 2012.GDT 7/11/13

BORING LOG NO. B-23

PROJECT: 650 W 83rd St. Phase II

CLIENT: City of Chicago 2FM
Chicago, Illinois

SITE: 650 West 83rd Street
Chicago, Illinois

LOCATION See Exhbit A-2

DEPTH	MATERIAL DESCRIPTION	DEPTH (ft)	WATER LEVEL OBSERVATIONS	SAMPLE TYPE	RECOVERY (in.)	OVA/PID (ppm)	SAMPLE NUMBER	SAMPLE SENT TO LAB (ID NUMBER)
	FILL - GRAVEL, trace sand, brick, and cinders, coarse grained, black, moist, loose					*ND		B-23 (1'-3') (hold)
2.0	FILL - SILTY CLAY, trace sand, gravel, and brick, dark gray, stiff				36	*ND	1	
		5				*ND		B-23 (4'-6') (hold)
6.0	SAND (SP), fine grained, brown, moist				32	*ND	2	
	wet		▽			*ND		
10.0	SILTY CLAY (CL-ML), trace sand and gravel, gray, moist, soft	10			40	*ND	3	
						*ND		
16.0	*Boring Terminated at 16 Feet*	15			48	*ND	4	

The stratification lines represent the approximate transition between differing soil types and/or rock types; in-situ these transitions may be gradual or may occur at different depths than shown.

* ND indicates a reading of less than the field detection limit (FDL) of one (1) part per million isobutylene equivalents (ppmi).

Advancement Method:
Direct Push

Abandonment Method:
Boring backfilled with soil cuttings upon completion.

See Appendices for description of field procedures.
See Appendices for description of laboratory procedures and additional data (if any).
See Appendices for explanation of symbols and abbreviations.

Notes:

WATER LEVEL OBSERVATIONS

▽ 7' while sampling

Terracon
650 West Lake Street, Suite 420
Chicago, Illinois

Boring Started: 6/27/2013 | Boring Completed: 6/27/2013
Drill Rig: GEO PROBE | Driller: Enviro Dynamics
Project No.: A2137008

THIS BORING LOG IS NOT VALID IF SEPARATED FROM ORIGINAL REPORT. ENVIRONMENTAL SMART LOG A2137008.GPJ ENV STANDARD 2012.GDT 7/11/13

BORING LOG NO. B-24

PROJECT: 650 W 83rd St. Phase II

CLIENT: City of Chicago 2FM
Chicago, Illinois

SITE: 650 West 83rd Street
Chicago, Illinois

LOCATION See Exhbit A-2

DEPTH	MATERIAL DESCRIPTION	DEPTH (ft)	WATER LEVEL OBSERVATIONS	SAMPLE TYPE	RECOVERY (In.)	OVA/PID (ppm)	SAMPLE NUMBER	SAMPLE SENT TO LAB (ID NUMBER)
	FILL - GRAVEL, trace sand, glass, brick, and clay, coarse grained, black, moist, loose					*ND		B-24 (1'-3')
2.0					30	*ND	1	
	FILL - SILTY CLAY, trace sand, crushed stone and gravel, gray, stiff					*ND		
4.5						*ND		
	FILL - SAND AND GRAVEL, trace brick, coarse grained, black, moist, loose	5			25	*ND	2	B-24 (6'-8')
10.0						*ND		
10.5	**SAND (SP)**, fine grained, brown, wet	10			42	*ND	3	
	SILTY CLAY (CL-ML), trace sand and gravel, gray, moist, soft					*ND		
16.0		15			44	*ND	4	
	Boring Terminated at 16 Feet							

The stratification lines represent the approximate transition between differing soil types and/or rock types; in-situ these transitions may be gradual or may occur at different depths than shown.

* ND indicates a reading of less than the field detection limit (FDL) of one (1) part per million isobutylene equivalents (ppmi).

Advancement Method:
Direct Push

Abandonment Method:
Boring backfilled with soil cuttings upon completion.

See Appendices for description of field procedures.
See Appendices for description of laboratory procedures and additional data (if any).
See Appendices for explanation of symbols and abbreviations.

Notes:

WATER LEVEL OBSERVATIONS

▽ 8' while sampling

Terracon
650 West Lake Street, Suite 420
Chicago, Illinois

Boring Started: 6/27/2013 | Boring Completed: 6/27/2013
Drill Rig: GEO PROBE | Driller: Enviro Dynamics
Project No.: A2137008

THIS BORING LOG IS NOT VALID IF SEPARATED FROM ORIGINAL REPORT. ENVIRONMENTAL SMART LOG A2137008.GPJ ENV STANDARD 2012.GDT 7/11/13

BORING LOG NO. B-25

PROJECT: 650 W 83rd St. Phase II

CLIENT: City of Chicago 2FM
Chicago, Illinois

SITE: 650 West 83rd Street
Chicago, Illinois

LOCATION See Exhibit A-2

DEPTH	MATERIAL DESCRIPTION	DEPTH (ft)	WATER LEVEL OBSERVATIONS	SAMPLE TYPE	RECOVERY (in.)	OVA/PID (ppm)	SAMPLE NUMBER	SAMPLE SENT TO LAB (ID NUMBER)
	FILL - GRAVEL, trace sand, glass, brick, and cinders, coarse grained, black, moist, loose					*ND		B-25 (1'-3')
					38	*ND	1	
5.0						*ND		B-25 (4'-6')
	SAND (SP), fine grained, brown, wet	5						
6.0			▽		32	*ND	2	
	SILTY CLAY (CL-ML), trace sand and gravel, dark gray, moist, medium stiff					*ND		
	gray, moist, soft	10			48	*ND	3	
						*ND		
16.0		15			48	*ND	4	
	Boring Terminated at 16 Feet							

The stratification lines represent the approximate transition between differing soil types and/or rock types; in-situ these transitions may be gradual or may occur at different depths than shown.

* ND indicates a reading of less than the field detection limit (FDL) of one (1) part per million isobutylene equivalents (ppmi).

Advancement Method:
Direct Push

Abandonment Method:
Boring backfilled with soil cuttings upon completion.

See Appendices for description of field procedures.
See Appendices for description of laboratory procedures and additional data (if any).
See Appendices for explanation of symbols and abbreviations.

Notes:

WATER LEVEL OBSERVATIONS

▽ *7' while sampling*

Terracon
650 West Lake Street, Suite 420
Chicago, Illinois

Boring Started: 6/26/2013 | Boring Completed: 6/26/2013
Drill Rig: GEO PROBE | Driller: Enviro Dynamics
Project No.: A2137008

THIS BORING LOG IS NOT VALID IF SEPARATED FROM ORIGINAL REPORT. ENVIRONMENTAL SMART LOG A2137008.GPJ ENV STANDARD 2012.GDT 7/11/13

BORING LOG NO. B-26

PROJECT: 650 W 83rd St. Phase II

CLIENT: City of Chicago 2FM
Chicago, Illinois

SITE: 650 West 83rd Street
Chicago, Illinois

LOCATION See Exhbit A-2

DEPTH	MATERIAL DESCRIPTION	DEPTH (ft)	WATER LEVEL OBSERVATIONS	SAMPLE TYPE	RECOVERY (In.)	OVA/PID (ppm)	SAMPLE NUMBER	SAMPLE SENT TO LAB (ID NUMBER)
	FILL - GRAVEL, trace sand, glass, brick, and clay, coarse grained, black, moist, loose					*ND		B-26 (1'-3')
					27	*ND	1	
4.0								
	SILTY CLAY (CL-ML), trace sand and gravel, gray, moist, soft	5	▽			*ND		
					16	*ND	2	B-26 (6'-8')
						*ND		
		10			48	*ND	3	
						*ND		
					48	*ND	4	
16.0		15						
	Boring Terminated at 16 Feet							

The stratification lines represent the approximate transition between differing soil types and/or rock types; in-situ these transitions may be gradual or may occur at different depths than shown.

* ND indicates a reading of less than the field detection limit (FDL) of one (1) part per million isobutylene equivalents (ppmi).

Advancement Method:
Direct Push

Abandonment Method:
Boring backfilled with soil cuttings upon completion.

See Appendices for description of field procedures.
See Appendices for description of laboratory procedures and additional data (if any).
See Appendices for explanation of symbols and abbreviations.

Notes:

WATER LEVEL OBSERVATIONS

▽ *8' while sampling*

Terracon
650 West Lake Street, Suite 420
Chicago, Illinois

Boring Started: 6/26/2013 | Boring Completed: 6/26/2013
Drill Rig: GEO PROBE | Driller: Enviro Dynamics
Project No.: A2137008

THIS BORING LOG IS NOT VALID IF SEPARATED FROM ORIGINAL REPORT. ENVIRONMENTAL SMART LOG A2137008.GPJ ENV STANDARD 2012.GDT 7/11/13

BORING LOG NO. B-27

PROJECT: 650 W 83rd St. Phase II

CLIENT: City of Chicago 2FM
Chicago, Illinois

SITE: 650 West 83rd Street
Chicago, Illinois

LOCATION See Exhbit A-2

DEPTH	MATERIAL DESCRIPTION	GRAPHIC LOG	DEPTH (ft)	WATER LEVEL OBSERVATIONS	SAMPLE TYPE	RECOVERY (In.)	OVA/PID (ppm)	SAMPLE NUMBER	SAMPLE SENT TO LAB (ID NUMBER)
	FILL - GRAVEL, trace sand, glass, brick, and clay, coarse grained, black, moist, loose					24	*ND *ND	1	B-27 (1'-3')
			5			14	*ND *ND	2	B-27 (6'-8')
8.0	**SILTY CLAY (CL-ML)**, trace sand and gravel, gray, wet, soft			▽		28	*ND *ND	3	
			10			48	*ND *ND	4	
16.0	***Boring Terminated at 16 Feet***		15						

The stratification lines represent the approximate transition between differing soil types and/or rock types; in-situ these transitions may be gradual or may occur at different depths than shown.

* ND indicates a reading of less than the field detection limit (FDL) of one (1) part per million isobutylene equivalents (ppmi).

Advancement Method:
Direct Push

Abandonment Method:
Boring backfilled with soil cuttings upon completion.

See Appendices for description of field procedures.
See Appendices for description of laboratory procedures and additional data (if any).
See Appendices for explanation of symbols and abbreviations.

Notes:

WATER LEVEL OBSERVATIONS

▽ 8' while sampling

Terracon
650 West Lake Street, Suite 420
Chicago, Illinois

Boring Started: 6/26/2013 | Boring Completed: 6/26/2013
Drill Rig: GEO PROBE | Driller: Enviro Dynamics
Project No.: A2137008

THIS BORING LOG IS NOT VALID IF SEPARATED FROM ORIGINAL REPORT. ENVIRONMENTAL SMART LOG A2137008.GPJ ENV STANDARD 2012.GDT 7/11/13

BORING LOG NO. B-28

PROJECT: 650 W 83rd St. Phase II

CLIENT: City of Chicago 2FM
Chicago, Illinois

SITE: 650 West 83rd Street
Chicago, Illinois

LOCATION See Exhibit A-2

DEPTH	MATERIAL DESCRIPTION	DEPTH (ft)	WATER LEVEL OBSERVATIONS	SAMPLE TYPE	RECOVERY (in.)	OVA/PID (ppm)	SAMPLE NUMBER	SAMPLE SENT TO LAB (ID NUMBER)
	FILL - GRAVEL, trace sand, glass, brick, and clay, coarse grained, black, moist, loose					*ND		B-28 (1'-3')
					30	*ND	1	
4.0								
	FILL - SAND, trace gravel, brick and clay, brown, moist, loose	5				*ND		B-28 (4'-6')
			▽		32	*ND	2	
8.0								
	SILTY CLAY (CL-ML), trace sand and gravel, gray, moist, soft					*ND		
		10			48	*ND	3	
						*ND		
					48	*ND	4	
16.0		15						
	Boring Terminated at 16 Feet							

The stratification lines represent the approximate transition between differing soil types and/or rock types; in-situ these transitions may be gradual or may occur at different depths than shown.

* ND indicates a reading of less than the field detection limit (FDL) of one (1) part per million isobutylene equivalents (ppmi).

Advancement Method:
Direct Push

Abandonment Method:
Boring backfilled with soil cuttings upon completion.

See Appendices for description of field procedures.
See Appendices for description of laboratory procedures and additional data (if any).
See Appendices for explanation of symbols and abbreviations.

Notes:

WATER LEVEL OBSERVATIONS

▽ 7' while sampling

Terracon
650 West Lake Street, Suite 420
Chicago, Illinois

Boring Started: 6/28/2013 | Boring Completed: 6/28/2013
Drill Rig: GEO PROBE | Driller: Enviro Dynamics
Project No.: A2137008

THIS BORING LOG IS NOT VALID IF SEPARATED FROM ORIGINAL REPORT. ENVIRONMENTAL SMART LOG A2137008.GPJ ENV STANDARD 2012.GDT 7/11/13

BORING LOG NO. B-29

PROJECT: 650 W 83rd St. Phase II

CLIENT: City of Chicago 2FM
Chicago, Illinois

SITE: 650 West 83rd Street
Chicago, Illinois

LOCATION See Exhibit A-2

DEPTH	MATERIAL DESCRIPTION	DEPTH (ft)	WATER LEVEL OBSERVATIONS	SAMPLE TYPE	RECOVERY (in.)	OVA/PID (ppm)	SAMPLE NUMBER	SAMPLE SENT TO LAB (ID NUMBER)
	FILL - GRAVEL, trace sand, glass, brick, and clay, coarse grained, black, moist, loose				34	*ND *ND	1	B-29 (1'-3')
5.0	**SAND (SP)**, fine grained, brown, wet	5	▽		43	*ND *ND	2	B-29 (4'-6')
10.0	**SILTY CLAY (CL-ML)**, trace sand and gravel, gray, moist, soft	10			48	*ND *ND	3	
16.0		15			48	*ND *ND	4	
	Boring Terminated at 16 Feet							

The stratification lines represent the approximate transition between differing soil types and/or rock types; in-situ these transitions may be gradual or may occur at different depths than shown.

* ND indicates a reading of less than the field detection limit (FDL) of one (1) part per million isobutylene equivalents (ppmi).

Advancement Method:
Direct Push

Abandonment Method:
Boring backfilled with soil cuttings upon completion.

See Appendices for description of field procedures.
See Appendices for description of laboratory procedures and additional data (if any).
See Appendices for explanation of symbols and abbreviations.

Notes:

WATER LEVEL OBSERVATIONS

▽ *7' while sampling*

Terracon
650 West Lake Street, Suite 420
Chicago, Illinois

Boring Started: 6/28/2013 | Boring Completed: 6/28/2013
Drill Rig: GEO PROBE | Driller: Enviro Dynamics
Project No.: A2137008

THIS BORING LOG IS NOT VALID IF SEPARATED FROM ORIGINAL REPORT. ENVIRONMENTAL SMART LOG A2137008.GPJ ENV STANDARD 2012.GDT 7/11/13

BORING LOG NO. B-30

PROJECT: 650 W 83rd St. Phase II

CLIENT: City of Chicago 2FM
Chicago, Illinois

SITE: 650 West 83rd Street
Chicago, Illinois

LOCATION See Exhbit A-2

DEPTH	MATERIAL DESCRIPTION	DEPTH (ft)	WATER LEVEL OBSERVATIONS	SAMPLE TYPE	RECOVERY (in.)	OVA/PID (ppm)	SAMPLE NUMBER	SAMPLE SENT TO LAB (ID NUMBER)
	FILL - GRAVEL, trace sand, brick, and clay, coarse grained, black, moist, loose					*ND		B-30 (1'-3')
					35	*ND	1	
3.0								
	FILL - CRUSHED STONE, trace sand, loose					*ND		B-30 (4'-6')
6.0		5			27	*ND	2	
	SAND (SP), fine grained, black to brown, wet		▽			*ND		
10.0					45	*ND	3	
	SILTY CLAY (CL-ML), trace sand and gravel, gray, moist, soft	10				*ND		
					48	*ND	4	
16.0		15						
	Boring Terminated at 16 Feet							

The stratification lines represent the approximate transition between differing soil types and/or rock types; in-situ these transitions may be gradual or may occur at different depths than shown.

* ND indicates a reading of less than the field detection limit (FDL) of one (1) part per million isobutylene equivalents (ppmi).

Advancement Method:
Direct Push

Abandonment Method:
Boring backfilled with soil cuttings upon completion.

See Appendices for description of field procedures.
See Appendices for description of laboratory procedures and additional data (if any).
See Appendices for explanation of symbols and abbreviations.

Notes:

WATER LEVEL OBSERVATIONS

▽ 7' while sampling

Terracon
650 West Lake Street, Suite 420
Chicago, Illinois

Boring Started: 6/28/2013 | Boring Completed: 6/28/2013
Drill Rig: GEO PROBE | Driller: Enviro Dynamics
Project No.: A2137008

THIS BORING LOG IS NOT VALID IF SEPARATED FROM ORIGINAL REPORT. ENVIRONMENTAL SMART LOG A2137008.GPJ ENV STANDARD 2012.GDT 7/11/13

BORING LOG NO. B-31

PROJECT: 650 W 83rd St. Phase II

CLIENT: City of Chicago 2FM
Chicago, Illinois

SITE: 650 West 83rd Street
Chicago, Illinois

LOCATION See Exhbit A-2

DEPTH	MATERIAL DESCRIPTION	SAMPLE NUMBER	RECOVERY (In.)	OVA/PID (ppm)	SAMPLE SENT TO LAB (ID NUMBER)
	FILL - SILTY CLAY, trace sand, gravel, and brick, gray	1	42	*ND *ND	B-31 (1'-3')
5.0	**SILTY CLAY (CL-ML)**, trace sand and gravel, gray, moist, soft	2	36	*ND *ND	B-31 (6'-8')
7.0	**SAND (SP)**, fine grained, brown, moist	3	36	*ND *ND	
10.0	**SILTY CLAY (CL-ML)**, trace sand and gravel, gray, moist, soft	4	48	*ND *ND	
		5	48	*ND *ND	
		6	48	*ND *ND	
24.0	***Boring Terminated at 24 Feet***				

DEPTH (ft): 5, 10, 15, 20

WATER LEVEL OBSERVATIONS: ▽ 8' while sampling

The stratification lines represent the approximate transition between differing soil types and/or rock types; in-situ these transitions may be gradual or may occur at different depths than shown.

* ND indicates a reading of less than the field detection limit (FDL) of one (1) part per million isobutylene equivalents (ppmi).

Advancement Method:
Direct Push

Abandonment Method:
Boring backfilled with soil cuttings upon completion.

See Appendices for description of field procedures.
See Appendices for description of laboratory procedures and additional data (if any).
See Appendices for explanation of symbols and abbreviations.

Notes:

Terracon
650 West Lake Street, Suite 420
Chicago, Illinois

Boring Started: 6/27/2013 | Boring Completed: 6/27/2013
Drill Rig: GEO PROBE | Driller: Enviro Dynamics
Project No.: A2137008

THIS BORING LOG IS NOT VALID IF SEPARATED FROM ORIGINAL REPORT. ENVIRONMENTAL SMART LOG A2137008.GPJ ENV STANDARD 2012.GDT 7/11/13

BORING LOG NO. B-32

PROJECT: 650 W 83rd St. Phase II

CLIENT: City of Chicago 2FM
Chicago, Illinois

SITE: 650 West 83rd Street
Chicago, Illinois

LOCATION See Exhibit A-2

GRAPHIC LOG	DEPTH	MATERIAL DESCRIPTION	DEPTH (ft)	WATER LEVEL OBSERVATIONS	SAMPLE TYPE	RECOVERY (in.)	OVA/PID (ppm)	SAMPLE NUMBER	SAMPLE SENT TO LAB (ID NUMBER)
		FILL - GRAVEL, trace sand, glass, clay and brick, coarse grained, black, wet, loose					*ND		B-32 (1'-3')
						22	*ND	1	
							*ND		
	6.0		5			27	*ND	2	B-32 (6'-8')
		SILTY CLAY (CL-ML), trace sand and gravel, gray, moist, soft		▽			*ND		
						48	*ND	3	
			10				*ND		
						48	*ND	4	
	16.0		15						
		Boring Terminated at 16 Feet							

The stratification lines represent the approximate transition between differing soil types and/or rock types; in-situ these transitions may be gradual or may occur at different depths than shown.

* ND indicates a reading of less than the field detection limit (FDL) of one (1) part per million isobutylene equivalents (ppmi).

Advancement Method:
Direct Push

Abandonment Method:
Boring backfilled with soil cuttings upon completion.

See Appendices for description of field procedures.
See Appendices for description of laboratory procedures and additional data (if any).
See Appendices for explanation of symbols and abbreviations.

Notes:

WATER LEVEL OBSERVATIONS

▽ *8' while sampling*

Terracon
650 West Lake Street, Suite 420
Chicago, Illinois

Boring Started: 6/26/2013 | Boring Completed: 6/26/2013

Drill Rig: GEO PROBE | Driller: Enviro Dynamics

Project No.: A2137008

THIS BORING LOG IS NOT VALID IF SEPARATED FROM ORIGINAL REPORT ENVIRONMENTAL SMART LOG A2137008.GPJ ENV STANDARD 2012.GDT 7/11/13

BORING LOG NO. B-33

PROJECT: 650 W 83rd St. Phase II

CLIENT: City of Chicago 2FM
Chicago, Illinois

SITE: 650 West 83rd Street
Chicago, Illinois

GRAPHIC LOG	DEPTH	MATERIAL DESCRIPTION	DEPTH (ft)	WATER LEVEL OBSERVATIONS	SAMPLE TYPE	RECOVERY (In.)	OVA/PID (ppm)	SAMPLE NUMBER	SAMPLE SENT TO LAB (ID NUMBER)
		LOCATION See Exhbit A-2							
		FILL - GRAVEL, trace sand, glass, brick, and cinders, coarse grained, dark brown					*ND		B-33 (1'-3')
						33	*ND	1	
	5.0						7.9		B-33 (4'-6')
		FILL - SAND, fine grained, black, wet	5	▽		30	*ND	2	
	8.0								
		SILTY CLAY (CL-ML), trace sand and gravel, gray, moist, soft					*ND		
			10			48	*ND	3	
							*ND		
						48	*ND	4	
	16.0		15						
		Boring Terminated at 16 Feet							

The stratification lines represent the approximate transition between differing soil types and/or rock types; in-situ these transitions may be gradual or may occur at different depths than shown.

* ND indicates a reading of less than the field detection limit (FDL) of one (1) part per million isobutylene equivalents (ppmi).

Advancement Method:
Direct Push

Abandonment Method:
Boring backfilled with soil cuttings upon completion.

See Appendices for description of field procedures.
See Appendices for description of laboratory procedures and additional data (if any).
See Appendices for explanation of symbols and abbreviations.

Notes:

WATER LEVEL OBSERVATIONS

▽ *7' while sampling*

Terracon
650 West Lake Street, Suite 420
Chicago, Illinois

Boring Started: 6/26/2013 | Boring Completed: 6/26/2013
Drill Rig: GEO PROBE | Driller: Enviro Dynamics
Project No.: A2137008

THIS BORING LOG IS NOT VALID IF SEPARATED FROM ORIGINAL REPORT. ENVIRONMENTAL SMART LOG A2137008.GPJ ENV STANDARD 2012.GDT 7/11/13

WELL LOG NO. B-34/MW-34

PROJECT: 650 W 83rd St. Phase II

CLIENT: City of Chicago 2FM
Chicago, Illinois

SITE: 650 West 83rd Street
Chicago, Illinois

LOCATION See Exhbit A-2

Surface Elev.: 95.99 (Ft.)

DEPTH	MATERIAL DESCRIPTION	ELEVATION (Ft.)
	FILL - SILTY CLAY, trace sand, black	
3.3		92.5
	FILL - GRAVEL, trace sand, glass, brick, and cinders, coarse grained, black, weak kerosene odor, moist	
8.5		87.5
	SILTY CLAY (CL-ML), trace sand and gravel, gray, wet, soft	
16.0		80
	Boring Terminated at 16 Feet	

INSTALLATION DETAILS

Well Completion:

Bentonite

Sand Filter

Screen

DEPTH (ft)	WATER LEVEL OBSERVATIONS	SAMPLE TYPE	RECOVERY (In.)	OVA/PID (ppm)	SAMPLE NUMBER	SAMPLE SENT TO LAB (ID NUMBER)
	▽		35	*ND	1	B-34 (1'-3')
				*ND		
5			32	*ND	2	B-34 (4'-6')
	▽			*ND		
10			46	*ND	3	
				*ND		
15			46	*ND	4	

The stratification lines represent the approximate transition between differing soil types and/or rock types; in-situ these transitions may be gradual or may occur at different depths than shown.

* ND indicates a reading of less than the field detection limit (FDL) of one (1) part per million isobutylene equivalents (ppmi).

Advancement Method:
Direct Push

Abandonment Method:
Boring backfilled with soil cuttings upon completion.

See Appendices for description of field procedures.
See Appendices for description of laboratory procedures and additional data (if any).
See Appendices for explanation of symbols and abbreviations.

Notes:
Top of Casing Elevation: 99.15'
Groundwater Elevation: 92.76'
1" diameter well

WATER LEVEL OBSERVATIONS

▽ *7' while sampling*

▽ *1.91' on 06/28/13*

6.39 below TOC on 7/19/13

Terracon
650 West Lake Street, Suite 420
Chicago, Illinois

Well Started: 6/25/2013
Well Completed: 6/25/2013
Drill Rig: GEO PROBE
Driller: Enviro Dynamics
Project No.: A2137008

THIS BORING LOG IS NOT VALID IF SEPARATED FROM ORIGINAL REPORT. ENVIRONMENTAL SMART LOG A2137008.GPJ ENV STANDARD 2012.GDT 7/11/13

BORING LOG NO. B-35

PROJECT: 650 W 83rd St. Phase II

CLIENT: City of Chicago 2FM
Chicago, Illinois

SITE: 650 West 83rd Street
Chicago, Illinois

LOCATION See Exhbit A-2

DEPTH	MATERIAL DESCRIPTION	DEPTH (ft)	WATER LEVEL OBSERVATIONS	SAMPLE TYPE	RECOVERY (In.)	OVA/PID (ppm)	SAMPLE NUMBER	SAMPLE SENT TO LAB (ID NUMBER)
	FILL - GRAVEL, trace sand, glass, brick, and cinders, coarse grained, black, moist					*ND		B-35 (1'-3')
					36	*ND	1	
5.0						*ND		B-35 (4-6')
	SAND (SP), fine grained, brown, wet	5						
6.0					30	*ND	2	
	SILTY CLAY (CL-ML), trace sand and gravel, gray, moist, soft		▽			*ND		
		10			48	*ND	3	
						*ND		
16.0		15			48	*ND	4	
	Boring Terminated at 16 Feet							

The stratification lines represent the approximate transition between differing soil types and/or rock types; in-situ these transitions may be gradual or may occur at different depths than shown.

* ND indicates a reading of less than the field detection limit (FDL) of one (1) part per million isobutylene equivalents (ppmi).

Advancement Method:
Direct Push

Abandonment Method:
Boring backfilled with soil cuttings upon completion.

See Appendices for description of field procedures.
See Appendices for description of laboratory procedures and additional data (if any).
See Appendices for explanation of symbols and abbreviations.

Notes:

WATER LEVEL OBSERVATIONS

▽ *7' while sampling*

Terracon
650 West Lake Street, Suite 420
Chicago, Illinois

Boring Started: 6/26/2013 | Boring Completed: 6/26/2013
Drill Rig: GEO PROBE | Driller: Enviro Dynamics
Project No.: A2137008

THIS BORING LOG IS NOT VALID IF SEPARATED FROM ORIGINAL REPORT. ENVIRONMENTAL SMART LOG A2137008.GPJ ENV STANDARD 2012.GDT 7/11/13

BORING LOG NO. B-36

PROJECT: 650 W 83rd St. Phase II

CLIENT: City of Chicago 2FM
Chicago, Illinois

SITE: 650 West 83rd Street
Chicago, Illinois

LOCATION See Exhibit A-2

DEPTH	MATERIAL DESCRIPTION	DEPTH (ft)	WATER LEVEL OBSERVATIONS	SAMPLE TYPE	RECOVERY (In.)	OVA/PID (ppm)	SAMPLE NUMBER	SAMPLE SENT TO LAB (ID NUMBER)
	FILL - GRAVEL, trace sand, clay, glass, brick, and cinders, coarse grained, black, moist, loose					*ND		B-36 (1'-3')
					16	*ND	1	
5.0						*ND		B-36 (4'-6')
	FILL - SILTY CLAY, trace sand and gravel, gray, moist, soft	5						
6.0					26	*ND	2	
	SAND (SP), fine grained, gray, wet		▽					
8.0						*ND		
	SILTY CLAY (CL-ML), trace sand and gravel, gray, moist, soft	10			48	*ND	3	
						*ND		
					48	*ND	4	
16.0		15						
	Boring Terminated at 16 Feet							

The stratification lines represent the approximate transition between differing soil types and/or rock types; in-situ these transitions may be gradual or may occur at different depths than shown.

* ND indicates a reading of less than the field detection limit (FDL) of one (1) part per million isobutylene equivalents (ppmi).

Advancement Method:
Direct Push

Abandonment Method:
Boring backfilled with soil cuttings upon completion.

See Appendices for description of field procedures.
See Appendices for description of laboratory procedures and additional data (if any).
See Appendices for explanation of symbols and abbreviations.

Notes:

WATER LEVEL OBSERVATIONS

▽ *7' while sampling*

Terracon
650 West Lake Street, Suite 420
Chicago, Illinois

Boring Started: 6/26/2013	Boring Completed: 6/26/2013
Drill Rig: GEO PROBE	Driller: Enviro Dynamics
Project No.: A2137008	

THIS BORING LOG IS NOT VALID IF SEPARATED FROM ORIGINAL REPORT. ENVIRONMENTAL SMART LOG A2137008.GPJ ENV STANDARD 2012.GDT 7/11/13

BORING LOG NO. B-37

PROJECT: 650 W 83rd St. Phase II

CLIENT: City of Chicago 2FM
Chicago, Illinois

SITE: 650 West 83rd Street
Chicago, Illinois

GRAPHIC LOG	DEPTH	MATERIAL DESCRIPTION	DEPTH (ft)	WATER LEVEL OBSERVATIONS	SAMPLE TYPE	RECOVERY (In.)	OVA/PID (ppm)	SAMPLE NUMBER	SAMPLE SENT TO LAB (ID NUMBER)
		LOCATION See Exhibit A-2							
		FILL - SILTY CLAY, trace sand, gravel, cinders and brick, brown, moist, soft					*ND		B-37 (1'-3')
						27	*ND	1	
							*ND		
			5			30	*ND	2	B-37 (6'-8')
	8.0			▽					
		SILTY CLAY (CL-ML), trace sand and gravel, gray, moist, soft					*ND		
			10			48	*ND	3	
							*ND		
						48	*ND	4	
			15						
	16.0								
		Boring Terminated at 16 Feet							

The stratification lines represent the approximate transition between differing soil types and/or rock types; in-situ these transitions may be gradual or may occur at different depths than shown.

* ND indicates a reading of less than the field detection limit (FDL) of one (1) part per million isobutylene equivalents (ppmi).

Advancement Method:
Direct Push

Abandonment Method:
Boring backfilled with soil cuttings upon completion.

See Appendices for description of field procedures.
See Appendices for description of laboratory procedures and additional data (if any).
See Appendices for explanation of symbols and abbreviations.

Notes:

WATER LEVEL OBSERVATIONS

▽ *8' while sampling*

Terracon
650 West Lake Street, Suite 420
Chicago, Illinois

Boring Started: 6/27/2013 | Boring Completed: 6/27/2013
Drill Rig: GEO PROBE | Driller: Enviro Dynamics
Project No.: A2137008

THIS BORING LOG IS NOT VALID IF SEPARATED FROM ORIGINAL REPORT. ENVIRONMENTAL SMART LOG A2137008.GPJ ENV STANDARD 2012.GDT 7/11/13

BORING LOG NO. B-8b

PROJECT: 650 W 83rd St. Phase II ESA

CLIENT: City of Chicago 2FM
Chicago, Illinois

SITE: 650 West 83rd Street
Chicago, Illinois

LOCATION See Exhbit A-2

DEPTH	MATERIAL DESCRIPTION	DEPTH (ft)	WATER LEVEL OBSERVATIONS	SAMPLE TYPE	RECOVERY (in.)	OVA/PID (ppm)	SAMPLE NUMBER	SAMPLE SENT TO LAB (ID NUMBER)
	FILL - SILTY SAND, trace gravel, brown					*ND		B-8b (1'-3')
1.8								
2.0	FILL - CRUSHED STONE				41	*ND	1	
	FILL - SAND, trace gravel and silt, dark brown							
						*ND		B-8b (4'-6')
5.4		5	▽					
	SAND (SP), trace silt, brown, wet				32	*ND	2	
8.0								
	Boring Terminated at 8 Feet							

The stratification lines represent the approximate transition between differing soil types and/or rock types; in-situ these transitions may be gradual or may occur at different depths than shown.

* ND indicates a reading of less than the field detection limit (FDL) of one (1) part per million isobutylene equivalents (ppmi).

Advancement Method:
Direct Push

Abandonment Method:
Boring backfilled with soil cuttings upon completion.

See Appendices for description of field procedures.
See Appendices for description of laboratory procedures and additional data (if any).
See Appendices for explanation of symbols and abbreviations.

Notes:

WATER LEVEL OBSERVATIONS

▽ *5' while sampling*

Terracon
650 West Lake Street, Suite 420
Chicago, Illinois

Boring Started: 9/26/2013 | Boring Completed: 9/26/2013
Drill Rig: 6610 DT | Driller: Enviro-Dynamics
Project No.: A2137008

THIS BORING LOG IS NOT VALID IF SEPARATED FROM ORIGINAL REPORT. ENVIRONMENTAL SMART LOG A2137008 - 092613 AND 092713.GPJ TERRACON2012.GDT 10/11/13

BORING LOG NO. B-14VD

PROJECT: 650 W 83rd St. Phase II ESA

CLIENT: City of Chicago 2FM
Chicago, Illinois

SITE: 650 West 83rd Street
Chicago, Illinois

LOCATION See Exhbit A-2

DEPTH	MATERIAL DESCRIPTION	DEPTH (ft)	WATER LEVEL OBSERVATIONS	SAMPLE TYPE	RECOVERY (In.)	OVA/PID (ppm)	SAMPLE NUMBER	SAMPLE SENT TO LAB (ID NUMBER)
	FILL - SAND, trace gravel and silt, brown, dry					*ND		
2.0					26	N/A	1	
2.2	FILL - SILTY CLAY, trace gravel, gray							
	FILL - SAND, with silt, trace gravel, dark brown	5	▽			2.4		
					21	N/A	2	
8.6						*ND		
	SILTY CLAY (CL-ML), trace sand and gravel, gray, wet, very soft	10			29	*ND	3	B-14VD (8'-10') B-14VD (10'-12')
						*ND		
		15			46	*ND	4	B-14VD (12'-14')
16.0	*Boring Terminated at 16 Feet*							

The stratification lines represent the approximate transition between differing soil types and/or rock types; in-situ these transitions may be gradual or may occur at different depths than shown.

* ND indicates a reading of less than the field detection limit (FDL) of one (1) part per million isobutylene equivalents (ppmi).

Advancement Method:
Direct Push

Abandonment Method:
Boring backfilled with soil cuttings upon completion.

See Appendices for description of field procedures.
See Appendices for description of laboratory procedures and additional data (if any).
See Appendices for explanation of symbols and abbreviations.

Notes:

WATER LEVEL OBSERVATIONS

▽ *5' while sampling*

Terracon
650 West Lake Street, Suite 420
Chicago, Illinois

Boring Started: 9/26/2013 | Boring Completed: 9/26/2013
Drill Rig: 6610 DT | Driller: Enviro-Dynamics
Project No.: A2137008

THIS BORING LOG IS NOT VALID IF SEPARATED FROM ORIGINAL REPORT. ENVIRONMENTAL SMART LOG A2137008 - 092613 AND 092713.GPJ TERRACON2012.GDT 10/11/13

BORING LOG NO. B-16VD

PROJECT: 650 W 83rd St. Phase II ESA

CLIENT: City of Chicago 2FM
Chicago, Illinois

SITE: 650 West 83rd Street
Chicago, Illinois

LOCATION See Exhbit A-2

DEPTH	MATERIAL DESCRIPTION	DEPTH (ft)	WATER LEVEL OBSERVATIONS	SAMPLE TYPE	RECOVERY (In.)	OVA/PID (ppm)	SAMPLE NUMBER	SAMPLE SENT TO LAB (ID NUMBER)
	FILL - SILTY CLAY, with gravel and brick, dark brown					*ND		
					32	*ND	1	
4.0			▽					
	FILL - SAND, with gravel, dark gray, wet					*ND		
5.8		5			22	*ND	2	
	SILTY CLAY (CL-ML), trace sand and gravel, dark gray, wet, soft					*ND		
	gray, wet, very soft				41	*ND	3	B-16VD (8'-10')
		10						B-16VD (10'-12')
						*ND		B-16VD (12'-14')
					44	*ND	4	
16.0		15						
	Boring Terminated at 16 Feet							

The stratification lines represent the approximate transition between differing soil types and/or rock types; in-situ these transitions may be gradual or may occur at different depths than shown.

* ND indicates a reading of less than the field detection limit (FDL) of one (1) part per million isobutylene equivalents (ppmi).

Advancement Method:
Direct Push

Abandonment Method:
Boring backfilled with soil cuttings upon completion.

See Appendices for description of field procedures.
See Appendices for description of laboratory procedures and additional data (if any).
See Appendices for explanation of symbols and abbreviations.

Notes:

WATER LEVEL OBSERVATIONS

▽ *4' while sampling*

Terracon
650 West Lake Street, Suite 420
Chicago, Illinois

Boring Started: 9/26/2013 | Boring Completed: 9/26/2013
Drill Rig: 6610 DT | Driller: Enviro-Dynamics
Project No.: A2137008

THIS BORING LOG IS NOT VALID IF SEPARATED FROM ORIGINAL REPORT. ENVIRONMENTAL SMART LOG A2137008 - 092613 AND 092713.GPJ TERRACON2012.GDT 10/11/13

BORING LOG NO. B-35b

PROJECT: 650 W 83rd St. Phase II ESA

CLIENT: City of Chicago 2FM
Chicago, Illinois

SITE: 650 West 83rd Street
Chicago, Illinois

LOCATION See Exhbit A-2

DEPTH	MATERIAL DESCRIPTION	DEPTH (ft)	WATER LEVEL OBSERVATIONS	SAMPLE TYPE	RECOVERY (In.)	OVA/PID (ppm)	SAMPLE NUMBER	SAMPLE SENT TO LAB (ID NUMBER)
	FILL - SAND AND SILT, with gravel, brick and glass, brown					*ND		B-85b (1'-3')
					36	*ND	1	
4.0			▽					
	SAND (SP), trace gravel, brown, wet	5				*ND		B-85b (4'-6')
					40	*ND	2	
8.0								
	Boring Terminated at 8 Feet							

The stratification lines represent the approximate transition between differing soil types and/or rock types; in-situ these transitions may be gradual or may occur at different depths than shown.

* ND indicates a reading of less than the field detection limit (FDL) of one (1) part per million isobutylene equivalents (ppmi).

Advancement Method:
Direct Push

Abandonment Method:
Boring backfilled with soil cuttings upon completion.

See Appendices for description of field procedures.
See Appendices for description of laboratory procedures and additional data (if any).
See Appendices for explanation of symbols and abbreviations.

Notes:

WATER LEVEL OBSERVATIONS

▽ *4' while sampling*

Terracon
650 West Lake Street, Suite 420
Chicago, Illinois

Boring Started: 9/26/2013 | Boring Completed: 9/26/2013
Drill Rig: 6610 DT | Driller: Enviro-Dynamics
Project No.: A2137008

THIS BORING LOG IS NOT VALID IF SEPARATED FROM ORIGINAL REPORT. ENVIRONMENTAL SMART LOG A2137008 - 092613 AND 092713.GPJ TERRACON2012.GDT 10/11/13

BORING LOG NO. B-101

PROJECT: 650 W 83rd St. Phase II ESA

CLIENT: City of Chicago 2FM
Chicago, Illinois

SITE: 650 West 83rd Street
Chicago, Illinois

LOCATION See Exhbit A-2

DEPTH	MATERIAL DESCRIPTION	DEPTH (ft)	WATER LEVEL OBSERVATIONS	SAMPLE TYPE	RECOVERY (In.)	OVA/PID (ppm)	SAMPLE NUMBER	SAMPLE SENT TO LAB (ID NUMBER)
	FILL - SAND, trace gravel and brick, brown, dry					*ND		
1.9								
	FILL - SILTY CLAY, trace gravel, gray, dry, medium stiff				40	*ND	1	
						*ND		
5.6		5						
	FILL - SAND AND GRAVEL, black, wet		▽		38	*ND	2	B-101 (6'-8')
6.8								
	SAND (SP), gray, wet							
8.0								
	Boring Terminated at 8 Feet							

The stratification lines represent the approximate transition between differing soil types and/or rock types; in-situ these transitions may be gradual or may occur at different depths than shown.

* ND indicates a reading of less than the field detection limit (FDL) of one (1) part per million isobutylene equivalents (ppmi).

Advancement Method:
Direct Push

Abandonment Method:
Boring backfilled with soil cuttings upon completion.

See Appendices for description of field procedures.
See Appendices for description of laboratory procedures and additional data (if any).
See Appendices for explanation of symbols and abbreviations.

Notes:

WATER LEVEL OBSERVATIONS

▽ *6' while sampling*

Terracon
650 West Lake Street, Suite 420
Chicago, Illinois

Boring Started: 9/27/2013 | Boring Completed: 9/27/2013
Drill Rig: 6610 DT | Driller: Enviro-Dynamics
Project No.: A2137008

THIS BORING LOG IS NOT VALID IF SEPARATED FROM ORIGINAL REPORT. ENVIRONMENTAL SMART LOG A2137008 - 092613 AND 092713.GPJ TERRACON2012.GDT 10/11/13

BORING LOG NO. B-102

PROJECT: 650 W 83rd St. Phase II ESA

CLIENT: City of Chicago 2FM
Chicago, Illinois

SITE: 650 West 83rd Street
Chicago, Illinois

LOCATION See Exhibit A-2

DEPTH	MATERIAL DESCRIPTION	DEPTH (ft)	WATER LEVEL OBSERVATIONS	SAMPLE TYPE	RECOVERY (in.)	OVA/PID (ppm)	SAMPLE NUMBER	SAMPLE SENT TO LAB (ID NUMBER)
	FILL - SILTY CLAY, with sand, trace gravel and brick, brown and gray, dry					*ND		
					39	*ND	1	
						*ND		
		5						
6.0			▽		35	*ND	2	B-102 (6'-8')
6.6	**FILL - SAND AND GRAVEL**, trace gravel, black, wet							
	SAND (SP), gray, wet							
8.0	***Boring Terminated at 8 Feet***							

The stratification lines represent the approximate transition between differing soil types and/or rock types; in-situ these transitions may be gradual or may occur at different depths than shown.

* ND indicates a reading of less than the field detection limit (FDL) of one (1) part per million isobutylene equivalents (ppmi).

Advancement Method:
Direct Push

Abandonment Method:
Boring backfilled with soil cuttings upon completion.

See Appendices for description of field procedures.
See Appendices for description of laboratory procedures and additional data (if any).
See Appendices for explanation of symbols and abbreviations.

Notes:

WATER LEVEL OBSERVATIONS

▽ *6' while sampling*

Terracon
650 West Lake Street, Suite 420
Chicago, Illinois

Boring Started: 9/27/2013 | Boring Completed: 9/27/2013
Drill Rig: 6610 DT | Driller: Enviro-Dynamics
Project No.: A2137008

THIS BORING LOG IS NOT VALID IF SEPARATED FROM ORIGINAL REPORT. ENVIRONMENTAL SMART LOG A2137008 - 092613 AND 092713.GPJ TERRACON2012.GDT 10/11/13

BORING LOG NO. B-103

PROJECT: 650 W 83rd St. Phase II ESA

CLIENT: City of Chicago 2FM
Chicago, Illinois

SITE: 650 West 83rd Street
Chicago, Illinois

LOCATION See Exhibit A-2

DEPTH	MATERIAL DESCRIPTION	DEPTH (ft)	WATER LEVEL OBSERVATIONS	SAMPLE TYPE	RECOVERY (In.)	OVA/PID (ppm)	SAMPLE NUMBER	SAMPLE SENT TO LAB (ID NUMBER)
	FILL - SAND, with gravel, and brick, brown, dry					*ND		
1.8								
	FILL - SILTY CLAY, trace gravel, gray, dry, stiff				27	*ND	1	
4.0								
	FILL - SAND, with gravel, brick and stone, brown, dry					*ND		
5.3		5						
	FILL - SAND AND GRAVEL, dark brown, wet		▽		35	*ND	2	B-103 (6'-8')
8.0								
	Boring Terminated at 8 Feet							

The stratification lines represent the approximate transition between differing soil types and/or rock types; in-situ these transitions may be gradual or may occur at different depths than shown.

* ND indicates a reading of less than the field detection limit (FDL) of one (1) part per million isobutylene equivalents (ppmi).

Advancement Method:
Direct Push

Abandonment Method:
Boring backfilled with soil cuttings upon completion.

See Appendices for description of field procedures.
See Appendices for description of laboratory procedures and additional data (if any).
See Appendices for explanation of symbols and abbreviations.

Notes:

WATER LEVEL OBSERVATIONS

▽ *6' while sampling*

Terracon
650 West Lake Street, Suite 420
Chicago, Illinois

Boring Started: 9/27/2013 | Boring Completed: 9/27/2013
Drill Rig: 6610 DT | Driller: Enviro-Dynamics
Project No.: A2137008

THIS BORING LOG IS NOT VALID IF SEPARATED FROM ORIGINAL REPORT. ENVIRONMENTAL SMART LOG A2137008 - 092613 AND 092713.GPJ TERRACON2012.GDT 10/11/13

BORING LOG NO. B-104

PROJECT: 650 W 83rd St. Phase II ESA

CLIENT: City of Chicago 2FM
Chicago, Illinois

SITE: 650 West 83rd Street
Chicago, Illinois

GRAPHIC LOG	DEPTH	MATERIAL DESCRIPTION	DEPTH (ft)	WATER LEVEL OBSERVATIONS	SAMPLE TYPE	RECOVERY (In.)	OVA/PID (ppm)	SAMPLE NUMBER	SAMPLE SENT TO LAB (ID NUMBER)
		LOCATION See Exhbit A-2							
		FILL - SAND AND SILTY CLAY, trace gravel, brown, moist					*ND		
						39	*ND	1	
							*ND		
	5.8		5	▽		41	*ND	2	B-104 (6'-8')
		FILL - SAND AND GRAVEL, trace silt, black, wet							
	8.0								
		Boring Terminated at 8 Feet							

The stratification lines represent the approximate transition between differing soil types and/or rock types; in-situ these transitions may be gradual or may occur at different depths than shown.

* ND indicates a reading of less than the field detection limit (FDL) of one (1) part per million isobutylene equivalents (ppmi).

Advancement Method:
Direct Push

Abandonment Method:
Boring backfilled with soil cuttings upon completion.

See Appendices for description of field procedures.
See Appendices for description of laboratory procedures and additional data (if any).
See Appendices for explanation of symbols and abbreviations.

Notes:

WATER LEVEL OBSERVATIONS

▽ *6' while sampling*

Terracon
650 West Lake Street, Suite 420
Chicago, Illinois

Boring Started: 9/27/2013 | Boring Completed: 9/27/2013
Drill Rig: 6610 DT | Driller: Enviro-Dynamics
Project No.: A2137008

THIS BORING LOG IS NOT VALID IF SEPARATED FROM ORIGINAL REPORT. ENVIRONMENTAL SMART LOG A2137008 - 092613 AND 092713.GPJ TERRACON2012.GDT 10/11/13

BORING LOG NO. B-105

PROJECT: 650 W 83rd St. Phase II ESA

CLIENT: City of Chicago 2FM
Chicago, Illinois

SITE: 650 West 83rd Street
Chicago, Illinois

LOCATION See Exhbit A-2

GRAPHIC LOG	DEPTH	MATERIAL DESCRIPTION	DEPTH (ft)	WATER LEVEL OBSERVATIONS	SAMPLE TYPE	RECOVERY (in.)	OVA/PID (ppm)	SAMPLE NUMBER	SAMPLE SENT TO LAB (ID NUMBER)
		FILL - SAND, trace gravel and brick, brown					*ND		
	1.3								
		FILL - SILTY CLAY, trace gravel, gray, dry, stiff				39	*ND	1	
	4.0								
		FILL - SAND, trace gravel, brown, moist					*ND		
	5.2		5						
		FILL - SILTY CLAY, trace sand, gray, moist, soft		▽		42	*ND	2	B-105 (6'-8')
	6.2								
		FILL - SAND AND GRAVEL, black, wet							
	8.0								
		Boring Terminated at 8 Feet							

The stratification lines represent the approximate transition between differing soil types and/or rock types; in-situ these transitions may be gradual or may occur at different depths than shown.

* ND indicates a reading of less than the field detection limit (FDL) of one (1) part per million isobutylene equivalents (ppmi).

Advancement Method:
Direct Push

Abandonment Method:
Boring backfilled with soil cuttings upon completion.

See Appendices for description of field procedures.
See Appendices for description of laboratory procedures and additional data (if any).
See Appendices for explanation of symbols and abbreviations.

Notes:

WATER LEVEL OBSERVATIONS

▽ *6' while sampling*

Terracon
650 West Lake Street, Suite 420
Chicago, Illinois

Boring Started: 9/27/2013 | Boring Completed: 9/27/2013
Drill Rig: 6610 DT | Driller: Enviro-Dynamics
Project No.: A2137008

THIS BORING LOG IS NOT VALID IF SEPARATED FROM ORIGINAL REPORT. ENVIRONMENTAL SMART LOG A2137008 - 092613 AND 092713.GPJ TERRACON2012.GDT 10/11/13

BORING LOG NO. B-106

PROJECT: 650 W 83rd St. Phase II ESA

CLIENT: City of Chicago 2FM
Chicago, Illinois

SITE: 650 West 83rd Street
Chicago, Illinois

LOCATION See Exhbit A-2

DEPTH	MATERIAL DESCRIPTION	DEPTH (ft)	WATER LEVEL OBSERVATIONS	SAMPLE TYPE	RECOVERY (in.)	OVA/PID (ppm)	SAMPLE NUMBER	SAMPLE SENT TO LAB (ID NUMBER)
	FILL - SAND AND GRAVEL, trace brick, brown, dry					*ND		
2.2					32	*ND	1	
	FILL - SILTY CLAY, trace gravel, gray, soft							
4.5						*ND		
5.2	**FILL - CSRUSHED STONE**	5						
5.8	**FILL - BRICK AND WOOD**							
	FILL - SAND AND GRAVEL, black, wet		▽		33	*ND	2	B-106 (6'-8')
8.0								
	Boring Terminated at 8 Feet							

The stratification lines represent the approximate transition between differing soil types and/or rock types; in-situ these transitions may be gradual or may occur at different depths than shown.

* ND indicates a reading of less than the field detection limit (FDL) of one (1) part per million isobutylene equivalents (ppmi).

Advancement Method:
Direct Push

Abandonment Method:
Boring backfilled with soil cuttings upon completion.

See Appendices for description of field procedures.
See Appendices for description of laboratory procedures and additional data (if any).
See Appendices for explanation of symbols and abbreviations.

Notes:

WATER LEVEL OBSERVATIONS

▽ *6' while sampling*

Terracon
650 West Lake Street, Suite 420
Chicago, Illinois

Boring Started: 9/27/2013 | Boring Completed: 9/27/2013
Drill Rig: 6610 DT | Driller: Enviro-Dynamics
Project No.: A2137008

THIS BORING LOG IS NOT VALID IF SEPARATED FROM ORIGINAL REPORT. ENVIRONMENTAL SMART LOG A2137008 - 092613 AND 092713.GPJ TERRACON2012.GDT 10/11/13

BORING LOG NO. B-107

PROJECT: 650 W 83rd St. Phase II ESA

CLIENT: City of Chicago 2FM
Chicago, Illinois

SITE: 650 West 83rd Street
Chicago, Illinois

LOCATION See Exhibit A-2

DEPTH	MATERIAL DESCRIPTION	DEPTH (ft)	WATER LEVEL OBSERVATIONS	SAMPLE TYPE	RECOVERY (In.)	OVA/PID (ppm)	SAMPLE NUMBER	SAMPLE SENT TO LAB (ID NUMBER)
	FILL - SAND, trace gravel and brick, brown, dry					*ND		
2.4					36	*ND	1	
	FILL - CSRUSHED STONE							
4.0						*ND		
	FILL - SILTY CLAY, with gravel, trace stone, gray, moist, soft	5						
6.0			▽		39	*ND	2	B-107 (6'-8')
6.8	**FILL - SAND AND GRAVEL**, trace silt, black, wet							
	SAND (SP), gray, wet							
8.0								
	Boring Terminated at 8 Feet							

The stratification lines represent the approximate transition between differing soil types and/or rock types; in-situ these transitions may be gradual or may occur at different depths than shown.

* ND indicates a reading of less than the field detection limit (FDL) of one (1) part per million isobutylene equivalents (ppmi).

Advancement Method:
Direct Push

Abandonment Method:
Boring backfilled with soil cuttings upon completion.

See Appendices for description of field procedures.
See Appendices for description of laboratory procedures and additional data (if any).
See Appendices for explanation of symbols and abbreviations.

Notes:

WATER LEVEL OBSERVATIONS

▽ *6' while sampling*

Terracon
650 West Lake Street, Suite 420
Chicago, Illinois

Boring Started: 9/27/2013 | Boring Completed: 9/27/2013
Drill Rig: 6610 DT | Driller: Enviro-Dynamics
Project No.: A2137008

THIS BORING LOG IS NOT VALID IF SEPARATED FROM ORIGINAL REPORT. ENVIRONMENTAL SMART LOG A2137008 - 092613 AND 092713.GPJ TERRACON2012.GDT 10/11/13

BORING LOG NO. B-108

PROJECT: 650 W 83rd St. Phase II ESA

CLIENT: City of Chicago 2FM
Chicago, Illinois

SITE: 650 West 83rd Street
Chicago, Illinois

LOCATION See Exhibit A-2

DEPTH	MATERIAL DESCRIPTION	DEPTH (ft)	WATER LEVEL OBSERVATIONS	SAMPLE TYPE	RECOVERY (In.)	OVA/PID (ppm)	SAMPLE NUMBER	SAMPLE SENT TO LAB (ID NUMBER)
	FILL - SILTY CLAY, with gravel, trace sand, brown, dry, very stiff					*ND		
					39	*ND	1	
	wet, soft		▽			*ND		
5.0	FILL - SAND, trace gravel, dark brown, wet	5			34	*ND	2	B-108 (6'-8')
8.0	*Boring Terminated at 8 Feet*							

The stratification lines represent the approximate transition between differing soil types and/or rock types; in-situ these transitions may be gradual or may occur at different depths than shown.

* ND indicates a reading of less than the field detection limit (FDL) of one (1) part per million isobutylene equivalents (ppmi).

Advancement Method:
Direct Push

Abandonment Method:
Boring backfilled with soil cuttings upon completion.

See Appendices for description of field procedures.
See Appendices for description of laboratory procedures and additional data (if any).
See Appendices for explanation of symbols and abbreviations.

Notes:

WATER LEVEL OBSERVATIONS

▽ *4' while sampling*

Terracon
650 West Lake Street, Suite 420
Chicago, Illinois

Boring Started: 9/26/2013 | Boring Completed: 9/26/2013
Drill Rig: 6610 DT | Driller: Enviro-Dynamics
Project No.: A2137008

THIS BORING LOG IS NOT VALID IF SEPARATED FROM ORIGINAL REPORT. ENVIRONMENTAL SMART LOG A2137008 - 092613 AND 092713.GPJ TERRACON2012.GDT 10/11/13

BORING LOG NO. B-109

PROJECT: 650 W 83rd St. Phase II ESA

CLIENT: City of Chicago 2FM
Chicago, Illinois

SITE: 650 West 83rd Street
Chicago, Illinois

LOCATION See Exhbit A-2

DEPTH	MATERIAL DESCRIPTION	DEPTH (ft)	WATER LEVEL OBSERVATIONS	SAMPLE TYPE	RECOVERY (In.)	OVA/PID (ppm)	SAMPLE NUMBER	SAMPLE SENT TO LAB (ID NUMBER)
	FILL - SILTY CLAY, trace gravel, dark gray, dry, stiff					*ND		
					30	*ND	1	
	wet, soft		▽			*ND		
5.2		5						
	FILL - SAND AND GRAVEL, dark brown, wet				24	*ND	2	B-109 (6'-8')
8.0								
	Boring Terminated at 8 Feet							

The stratification lines represent the approximate transition between differing soil types and/or rock types; in-situ these transitions may be gradual or may occur at different depths than shown.

* ND indicates a reading of less than the field detection limit (FDL) of one (1) part per million isobutylene equivalents (ppmi).

Advancement Method:
Direct Push

Abandonment Method:
Boring backfilled with soil cuttings upon completion.

See Appendices for description of field procedures.
See Appendices for description of laboratory procedures and additional data (if any).
See Appendices for explanation of symbols and abbreviations.

Notes:

WATER LEVEL OBSERVATIONS

▽ *4' while sampling*

Terracon
650 West Lake Street, Suite 420
Chicago, Illinois

Boring Started: 9/26/2013 | Boring Completed: 9/26/2013
Drill Rig: 6610 DT | Driller: Enviro-Dynamics
Project No.: A2137008

THIS BORING LOG IS NOT VALID IF SEPARATED FROM ORIGINAL REPORT. ENVIRONMENTAL SMART LOG A2137008 - 092613 AND 092713.GPJ TERRACON2012.GDT 10/11/13

BORING LOG NO. B-110

PROJECT: 650 W 83rd St. Phase II ESA

CLIENT: City of Chicago 2FM
Chicago, Illinois

SITE: 650 West 83rd Street
Chicago, Illinois

LOCATION See Exhibit A-2

DEPTH	MATERIAL DESCRIPTION	DEPTH (ft)	WATER LEVEL OBSERVATIONS	SAMPLE TYPE	RECOVERY (In.)	OVA/PID (ppm)	SAMPLE NUMBER	SAMPLE SENT TO LAB (ID NUMBER)
	FILL - SILTY CLAY, trace gravel, dark gray, dry, medium stiff					*ND		
					32	*ND	1	
4.0								
	FILL - SILTY SAND, trace gravel, dark brown, wet		▽			*ND		
5.3		5						
	FILL - SAND AND GRAVEL, dark brown, wet				34	*ND	2	B-110 (6'-8')
8.0								
	Boring Terminated at 8 Feet							

The stratification lines represent the approximate transition between differing soil types and/or rock types; in-situ these transitions may be gradual or may occur at different depths than shown.

* ND indicates a reading of less than the field detection limit (FDL) of one (1) part per million isobutylene equivalents (ppmi).

Advancement Method:
Direct Push

Abandonment Method:
Boring backfilled with soil cuttings upon completion.

See Appendices for description of field procedures.
See Appendices for description of laboratory procedures and additional data (if any).
See Appendices for explanation of symbols and abbreviations.

Notes:

WATER LEVEL OBSERVATIONS

▽ *4.5' while sampling*

Terracon
650 West Lake Street, Suite 420
Chicago, Illinois

Boring Started: 9/26/2013 | Boring Completed: 9/26/2013
Drill Rig: 6610 DT | Driller: Enviro-Dynamics
Project No.: A2137008

THIS BORING LOG IS NOT VALID IF SEPARATED FROM ORIGINAL REPORT. ENVIRONMENTAL SMART LOG A2137008 - 092613 AND 092713.GPJ TERRACON2012.GDT 10/11/13

BORING LOG NO. B-111

PROJECT: 650 W 83rd St. Phase II ESA

CLIENT: City of Chicago 2FM
Chicago, Illinois

SITE: 650 West 83rd Street
Chicago, Illinois

LOCATION See Exhbit A-2

DEPTH	MATERIAL DESCRIPTION	DEPTH (ft)	WATER LEVEL OBSERVATIONS	SAMPLE TYPE	RECOVERY (In.)	OVA/PID (ppm)	SAMPLE NUMBER	SAMPLE SENT TO LAB (ID NUMBER)
	FILL - SILTY CLAY, with gravel, BRICK AND GLASS, gray, dry, stiff					*ND		
					44	*ND	1	
5.2						*ND		
	FILL - SAND AND GRAVEL, dark brown, wet	5	▽		43	*ND	2	B-111 (6'-8')
8.0								
	Boring Terminated at 8 Feet							

The stratification lines represent the approximate transition between differing soil types and/or rock types; in-situ these transitions may be gradual or may occur at different depths than shown.

* ND indicates a reading of less than the field detection limit (FDL) of one (1) part per million isobutylene equivalents (ppmi).

Advancement Method:
Direct Push

Abandonment Method:
Boring backfilled with soil cuttings upon completion.

See Appendices for description of field procedures.
See Appendices for description of laboratory procedures and additional data (if any).
See Appendices for explanation of symbols and abbreviations.

Notes:

WATER LEVEL OBSERVATIONS

▽ *6' while sampling*

Terracon
650 West Lake Street, Suite 420
Chicago, Illinois

Boring Started: 9/26/2013 | Boring Completed: 9/26/2013
Drill Rig: 6610 DT | Driller: Enviro-Dynamics
Project No.: A2137008

THIS BORING LOG IS NOT VALID IF SEPARATED FROM ORIGINAL REPORT. ENVIRONMENTAL SMART LOG A2137008 - 092613 AND 092713.GPJ TERRACON2012.GDT 10/11/13

BORING LOG NO. B-112

PROJECT: 650 W 83rd St. Phase II ESA

CLIENT: City of Chicago 2FM
Chicago, Illinois

SITE: 650 West 83rd Street
Chicago, Illinois

GRAPHIC LOG	DEPTH	MATERIAL DESCRIPTION	DEPTH (ft)	WATER LEVEL OBSERVATIONS	SAMPLE TYPE	RECOVERY (In.)	OVA/PID (ppm)	SAMPLE NUMBER	SAMPLE SENT TO LAB (ID NUMBER)
	LOCATION See Exhibit A-2								
		FILL - SILTY CLAY, with gravel, and brick, dark gray, dry					*ND		
						39	*ND	1	
	4.7						*ND		
	5.5	**FILL - SAND AND GRAVEL**, dark brown, wet	5	▽					
		SILTY CLAY (CL-ML), with sand, trace gravel, brown and gray, wet, soft				32	*ND	2	B-112 (6'-8')
	8.0								
		Boring Terminated at 8 Feet							

The stratification lines represent the approximate transition between differing soil types and/or rock types; in-situ these transitions may be gradual or may occur at different depths than shown.

* ND indicates a reading of less than the field detection limit (FDL) of one (1) part per million isobutylene equivalents (ppmi).

Advancement Method:
Direct Push

Abandonment Method:
Boring backfilled with soil cuttings upon completion.

See Appendices for description of field procedures.
See Appendices for description of laboratory procedures and additional data (if any).
See Appendices for explanation of symbols and abbreviations.

Notes:

WATER LEVEL OBSERVATIONS

▽ *5' while sampling*

Terracon
650 West Lake Street, Suite 420
Chicago, Illinois

Boring Started: 9/26/2013 | Boring Completed: 9/26/2013
Drill Rig: 6610 DT | Driller: Enviro-Dynamics
Project No.: A2137008

THIS BORING LOG IS NOT VALID IF SEPARATED FROM ORIGINAL REPORT. ENVIRONMENTAL SMART LOG A2137008 - 092613 AND 092713.GPJ TERRACON2012.GDT 10/11/13

BORING LOG NO. B-113

PROJECT: 650 W 83rd St. Phase II ESA

CLIENT: City of Chicago 2FM
Chicago, Illinois

SITE: 650 West 83rd Street
Chicago, Illinois

LOCATION See Exhbit A-2

DEPTH	MATERIAL DESCRIPTION	DEPTH (ft)	WATER LEVEL OBSERVATIONS	SAMPLE TYPE	RECOVERY (in.)	OVA/PID (ppm)	SAMPLE NUMBER	SAMPLE SENT TO LAB (ID NUMBER)
	FILL - SILTY CLAY, with gravel, brick and glass fragments, dark gray, dry					*ND		
					39	*ND	1	
4.0								
	FILL - SAND AND GRAVEL, dark brown, wet					*ND		
5.2		5	▽					
	SILTY CLAY (CL-ML), with sand, trace gravel, brown and gray, wet, soft				44	*ND	2	B-113 (6'-8')
8.0								
	Boring Terminated at 8 Feet							

The stratification lines represent the approximate transition between differing soil types and/or rock types; in-situ these transitions may be gradual or may occur at different depths than shown.

* ND indicates a reading of less than the field detection limit (FDL) of one (1) part per million isobutylene equivalents (ppmi).

Advancement Method:
Direct Push

Abandonment Method:
Boring backfilled with soil cuttings upon completion.

See Appendices for description of field procedures.
See Appendices for description of laboratory procedures and additional data (if any).
See Appendices for explanation of symbols and abbreviations.

Notes:

WATER LEVEL OBSERVATIONS

▽ *5' while sampling*

Terracon
650 West Lake Street, Suite 420
Chicago, Illinois

Boring Started: 9/26/2013 | Boring Completed: 9/26/2013
Drill Rig: 6610 DT | Driller: Enviro-Dynamics
Project No.: A2137008

THIS BORING LOG IS NOT VALID IF SEPARATED FROM ORIGINAL REPORT. ENVIRONMENTAL SMART LOG A2137008 - 092613 AND 092713.GPJ TERRACON2012.GDT 10/11/13

BORING LOG NO. B-114

PROJECT: 650 W 83rd St. Phase II ESA

CLIENT: City of Chicago 2FM
Chicago, Illinois

SITE: 650 West 83rd Street
Chicago, Illinois

LOCATION See Exhbit A-2

DEPTH	MATERIAL DESCRIPTION	DEPTH (ft)	WATER LEVEL OBSERVATIONS	SAMPLE TYPE	RECOVERY (in.)	OVA/PID (ppm)	SAMPLE NUMBER	SAMPLE SENT TO LAB (ID NUMBER)
	FILL - SILTY CLAY, trace sand and gravel, dark gray, moist, medium stiff					*ND		
					40	*ND	1	
4.0								
	FILL - SAND, with gravel and brick, dark gray, wet		▽			*ND		
5.3		5						
	SILTY CLAY (CL-ML), trace sand and gravel, brown, wet, soft				39	*ND	2	B-114 (6'-8')
8.0								
	Boring Terminated at 8 Feet							

The stratification lines represent the approximate transition between differing soil types and/or rock types; in-situ these transitions may be gradual or may occur at different depths than shown.

* ND indicates a reading of less than the field detection limit (FDL) of one (1) part per million isobutylene equivalents (ppmi).

Advancement Method:
Direct Push

Abandonment Method:
Boring backfilled with soil cuttings upon completion.

See Appendices for description of field procedures.
See Appendices for description of laboratory procedures and additional data (if any).
See Appendices for explanation of symbols and abbreviations.

Notes:

WATER LEVEL OBSERVATIONS

▽ *4.5' while sampling*

Terracon
650 West Lake Street, Suite 420
Chicago, Illinois

Boring Started: 9/26/2013 | Boring Completed: 9/26/2013
Drill Rig: 6610 DT | Driller: Enviro-Dynamics
Project No.: A2137008

THIS BORING LOG IS NOT VALID IF SEPARATED FROM ORIGINAL REPORT. ENVIRONMENTAL SMART LOG A2137008 - 092613 AND 092713.GPJ TERRACON2012.GDT 10/11/13

BORING LOG NO. B-115

PROJECT: 650 W 83rd St. Phase II ESA

CLIENT: City of Chicago 2FM
Chicago, Illinois

SITE: 650 West 83rd Street
Chicago, Illinois

LOCATION See Exhbit A-2

GRAPHIC LOG	DEPTH	MATERIAL DESCRIPTION	DEPTH (ft)	WATER LEVEL OBSERVATIONS	SAMPLE TYPE	RECOVERY (In.)	OVA/PID (ppm)	SAMPLE NUMBER	SAMPLE SENT TO LAB (ID NUMBER)
		FILL - SILTY CLAY, with gravel and brick, dark brown, dry					1.5		
						41	1.0	1	
			5	▽			*ND		
	5.7								
		FILL - SILTY SAND, trace gravel, dark brown, wet				42	*ND	2	B-105 (6'-8')
	8.0								
		Boring Terminated at 8 Feet							

The stratification lines represent the approximate transition between differing soil types and/or rock types; in-situ these transitions may be gradual or may occur at different depths than shown.

* ND indicates a reading of less than the field detection limit (FDL) of one (1) part per million isobutylene equivalents (ppmi).

Advancement Method:
Direct Push

Abandonment Method:
Boring backfilled with soil cuttings upon completion.

See Appendices for description of field procedures.
See Appendices for description of laboratory procedures and additional data (if any).
See Appendices for explanation of symbols and abbreviations.

Notes:

WATER LEVEL OBSERVATIONS

▽ 5' while sampling

Terracon
650 West Lake Street, Suite 420
Chicago, Illinois

Boring Started: 9/26/2013 | Boring Completed: 9/26/2013
Drill Rig: 6610 DT | Driller: Enviro-Dynamics
Project No.: A2137008

THIS BORING LOG IS NOT VALID IF SEPARATED FROM ORIGINAL REPORT. ENVIRONMENTAL SMART LOG A2137008 - 092613 AND 092713.GPJ TERRACON2012.GDT 10/11/13

BORING LOG NO. B-116

PROJECT: 650 W 83rd St. Phase II ESA

CLIENT: City of Chicago 2FM
Chicago, Illinois

SITE: 650 West 83rd Street
Chicago, Illinois

LOCATION See Exhibit A-2

GRAPHIC LOG	DEPTH	MATERIAL DESCRIPTION	DEPTH (ft)	WATER LEVEL OBSERVATIONS	SAMPLE TYPE	RECOVERY (In.)	OVA/PID (ppm)	SAMPLE NUMBER	SAMPLE SENT TO LAB (ID NUMBER)
		FILL - NO RECOVERY				0		1	
	4.0								
	4.6	FILL - CRUSHED STONE/CONCRETE, dark brown, dry					*ND		
		FILL - SAND AND GRAVEL, dark brown, wet	5	▽					
	5.9					36	*ND	2	B-116 (6'-8')
		SANDY SILT (ML), brown, wet							
	8.0								
		Boring Terminated at 8 Feet							

The stratification lines represent the approximate transition between differing soil types and/or rock types; in-situ these transitions may be gradual or may occur at different depths than shown.

* ND indicates a reading of less than the field detection limit (FDL) of one (1) part per million isobutylene equivalents (ppmi).

Advancement Method:
Direct Push

Abandonment Method:
Boring backfilled with soil cuttings upon completion.

See Appendices for description of field procedures.
See Appendices for description of laboratory procedures and additional data (if any).
See Appendices for explanation of symbols and abbreviations.

Notes:

WATER LEVEL OBSERVATIONS

▽ *5' while sampling*

Terracon
650 West Lake Street, Suite 420
Chicago, Illinois

Boring Started: 9/27/2013 | Boring Completed: 9/27/2013
Drill Rig: 6610 DT | Driller: Enviro-Dynamics
Project No.: A2137008

THIS BORING LOG IS NOT VALID IF SEPARATED FROM ORIGINAL REPORT. ENVIRONMENTAL SMART LOG A2137008 - 092613 AND 092713.GPJ TERRACON2012.GDT 10/11/13

BORING LOG NO. B-117

PROJECT: 650 W 83rd St. Phase II ESA

CLIENT: City of Chicago 2FM
Chicago, Illinois

SITE: 650 West 83rd Street
Chicago, Illinois

LOCATION See Exhbit A-2

GRAPHIC LOG	DEPTH	MATERIAL DESCRIPTION	DEPTH (ft)	WATER LEVEL OBSERVATIONS	SAMPLE TYPE	RECOVERY (In.)	OVA/PID (ppm)	SAMPLE NUMBER	SAMPLE SENT TO LAB (ID NUMBER)
		FILL - NO RECOVERY				0		1	
	4.0			▽			*ND		
		SANDY SILT (ML), trace gravel, brown, wet	5			28	*ND	2	B-117 (6'-8')
	8.0								
		Boring Terminated at 8 Feet							

The stratification lines represent the approximate transition between differing soil types and/or rock types; in-situ these transitions may be gradual or may occur at different depths than shown.

* ND indicates a reading of less than the field detection limit (FDL) of one (1) part per million isobutylene equivalents (ppmi).

Advancement Method:
Direct Push

Abandonment Method:
Boring backfilled with soil cuttings upon completion.

See Appendices for description of field procedures.
See Appendices for description of laboratory procedures and additional data (if any).
See Appendices for explanation of symbols and abbreviations.

Notes:

WATER LEVEL OBSERVATIONS

▽ *4' while sampling*

Terracon
650 West Lake Street, Suite 420
Chicago, Illinois

Boring Started: 9/27/2013 | Boring Completed: 9/27/2013
Drill Rig: 6610 DT | Driller: Enviro-Dynamics
Project No.: A2137008

THIS BORING LOG IS NOT VALID IF SEPARATED FROM ORIGINAL REPORT. ENVIRONMENTAL SMART LOG A2137008 - 092613 AND 092713.GPJ TERRACON2012.GDT 10/11/13

BORING LOG NO. B-118

PROJECT: 650 W 83rd St. Phase II ESA

CLIENT: City of Chicago 2FM
Chicago, Illinois

SITE: 650 West 83rd Street
Chicago, Illinois

GRAPHIC LOG	DEPTH	MATERIAL DESCRIPTION	DEPTH (ft)	WATER LEVEL OBSERVATIONS	SAMPLE TYPE	RECOVERY (In.)	OVA/PID (ppm)	SAMPLE NUMBER	SAMPLE SENT TO LAB (ID NUMBER)
		LOCATION See Exhibit A-2							
		FILL - NO RECOVERY							
	4.0					0		1	
	4.6	FILL - CRUSHED STONE/CONCRETE, dark brown, dry					*ND		
		FILL - SAND AND GRAVEL, dark brown, wet	5	▽					
	5.9					34	*ND	2	B-118 (6'-8')
		SANDY SILT (ML), brown, wet							
	8.0								
		Boring Terminated at 8 Feet							

The stratification lines represent the approximate transition between differing soil types and/or rock types; in-situ these transitions may be gradual or may occur at different depths than shown.

* ND indicates a reading of less than the field detection limit (FDL) of one (1) part per million isobutylene equivalents (ppm).

Advancement Method:
Direct Push

Abandonment Method:
Boring backfilled with soil cuttings upon completion.

See Appendices for description of field procedures.
See Appendices for description of laboratory procedures and additional data (if any).
See Appendices for explanation of symbols and abbreviations.

Notes:

WATER LEVEL OBSERVATIONS

▽ *5.5' while sampling*

Terracon
650 West Lake Street, Suite 420
Chicago, Illinois

Boring Started: 9/27/2013 | Boring Completed: 9/27/2013
Drill Rig: 6610 DT | Driller: Enviro-Dynamics
Project No.: A2137008

THIS BORING LOG IS NOT VALID IF SEPARATED FROM ORIGINAL REPORT. ENVIRONMENTAL SMART LOG A2137008 - 092613 AND 092713.GPJ TERRACON2012.GDT 10/11/13

BORING LOG NO. B-119

PROJECT: 650 W 83rd St. Phase II ESA

CLIENT: City of Chicago 2FM
Chicago, Illinois

SITE: 650 West 83rd Street
Chicago, Illinois

LOCATION See Exhibit A-2

DEPTH	MATERIAL DESCRIPTION	DEPTH (ft)	WATER LEVEL OBSERVATIONS	SAMPLE TYPE	RECOVERY (In.)	OVA/PID (ppm)	SAMPLE NUMBER	SAMPLE SENT TO LAB (ID NUMBER)
	FILL - SAND AND GRAVEL, with silt and brick, dark brown, wet					*ND		B-119 (1'-3')
					31	*ND	1	
						*ND		
5.3		5	▽					
	SANDY SILT (ML), brown, wet				36	*ND	2	B-119 (6'-8')
8.0								
	Boring Terminated at 8 Feet							

The stratification lines represent the approximate transition between differing soil types and/or rock types; in-situ these transitions may be gradual or may occur at different depths than shown.

* ND indicates a reading of less than the field detection limit (FDL) of one (1) part per million isobutylene equivalents (ppmi).

Advancement Method:
Direct Push

Abandonment Method:
Boring backfilled with soil cuttings upon completion.

See Appendices for description of field procedures.
See Appendices for description of laboratory procedures and additional data (if any).
See Appendices for explanation of symbols and abbreviations.

Notes:

WATER LEVEL OBSERVATIONS

▽ 5' while sampling

Terracon
650 West Lake Street, Suite 420
Chicago, Illinois

Boring Started: 9/27/2013 | Boring Completed: 9/27/2013
Drill Rig: 6610 DT | Driller: Enviro-Dynamics
Project No.: A2137008

THIS BORING LOG IS NOT VALID IF SEPARATED FROM ORIGINAL REPORT. ENVIRONMENTAL SMART LOG A2137008 - 092613 AND 092713.GPJ TERRACON2012.GDT 10/11/13

BORING LOG NO. B-120

PROJECT: 650 W 83rd St. Phase II ESA

CLIENT: City of Chicago 2FM
Chicago, Illinois

SITE: 650 West 83rd Street
Chicago, Illinois

LOCATION See Exhibit A-2

DEPTH	MATERIAL DESCRIPTION	DEPTH (ft)	WATER LEVEL OBSERVATIONS	SAMPLE TYPE	RECOVERY (In.)	OVA/PID (ppm)	SAMPLE NUMBER	SAMPLE SENT TO LAB (ID NUMBER)
	FILL - NO RECOVERY				0		1	
4.0								
4.5	**FILL - CRUSHED STONE/CONCRETE**, dark brown, dry					*ND		
	FILL - SAND AND GRAVEL, trace silt, dark brown, wet	5	▽		38	*ND	2	B-120 (6'-8')
8.0								
	Boring Terminated at 8 Feet							

The stratification lines represent the approximate transition between differing soil types and/or rock types; in-situ these transitions may be gradual or may occur at different depths than shown.

* ND indicates a reading of less than the field detection limit (FDL) of one (1) part per million isobutylene equivalents (ppmi).

Advancement Method:
Direct Push

Abandonment Method:
Boring backfilled with soil cuttings upon completion.

See Appendices for description of field procedures.
See Appendices for description of laboratory procedures and additional data (if any).
See Appendices for explanation of symbols and abbreviations.

Notes:

WATER LEVEL OBSERVATIONS

▽ *5.7' while sampling*

Terracon
650 West Lake Street, Suite 420
Chicago, Illinois

Boring Started: 9/27/2013 | Boring Completed: 9/27/2013
Drill Rig: 6610 DT | Driller: Enviro-Dynamics
Project No.: A2137008

THIS BORING LOG IS NOT VALID IF SEPARATED FROM ORIGINAL REPORT. ENVIRONMENTAL SMART LOG A2137008 - 092613 AND 092713.GPJ TERRACON2012.GDT 10/11/13

BORING LOG NO. B-121

PROJECT: 650 W 83rd St. Phase II ESA

CLIENT: City of Chicago 2FM
Chicago, Illinois

SITE: 650 West 83rd Street
Chicago, Illinois

GRAPHIC LOG	DEPTH	MATERIAL DESCRIPTION	DEPTH (ft)	WATER LEVEL OBSERVATIONS	SAMPLE TYPE	RECOVERY (In.)	OVA/PID (ppm)	SAMPLE NUMBER	SAMPLE SENT TO LAB (ID NUMBER)
		LOCATION See Exhibit A-2							
		FILL - NO RECOVERY				0		1	
	4.0								
		FILL - CRUSHED STONE/CONCRETE, with brick, dark brown, dry					*ND		
	5.0			▽					
	5.4	**FILL - SAND AND GRAVEL**, dark brown, wet	5						
		SANDY SILT (ML), brown, wet				34	*ND	2	B-121 (6'-8')
	8.0								
		Boring Terminated at 8 Feet							

The stratification lines represent the approximate transition between differing soil types and/or rock types; in-situ these transitions may be gradual or may occur at different depths than shown.

* ND indicates a reading of less than the field detection limit (FDL) of one (1) part per million isobutylene equivalents (ppmi).

Advancement Method:
Direct Push

Abandonment Method:
Boring backfilled with soil cuttings upon completion.

See Appendices for description of field procedures.
See Appendices for description of laboratory procedures and additional data (if any).
See Appendices for explanation of symbols and abbreviations.

Notes:

WATER LEVEL OBSERVATIONS

▽ *5' while sampling*

Terracon
650 West Lake Street, Suite 420
Chicago, Illinois

Boring Started: 9/27/2013 | Boring Completed: 9/27/2013
Drill Rig: 6610 DT | Driller: Enviro-Dynamics
Project No.: A2137008

THIS BORING LOG IS NOT VALID IF SEPARATED FROM ORIGINAL REPORT. ENVIRONMENTAL SMART LOG A2137008 - 092613 AND 092713.GPJ TERRACON2012.GDT 10/11/13

BORING LOG NO. B-122 / MW122

PROJECT: 650 W 83rd St. Phase II ESA

CLIENT: City of Chicago 2FM
Chicago, Illinois

SITE: 650 West 83rd Street
Chicago, Illinois

LOCATION See Exhibit A-2

DEPTH	MATERIAL DESCRIPTION	DEPTH (ft)	WATER LEVEL OBSERVATIONS	SAMPLE TYPE	RECOVERY (in.)	OVA/PID (ppm)	SAMPLE NUMBER	SAMPLE SENT TO LAB (ID NUMBER)
	FILL - SILTY SANDY CLAY, with gravel, dark brown, moist					*ND		B-122 (1'-3')
1.2								
	FILL - SANDY SILT, trace gravel, gray, moist				36	*ND	1	
4.0								
	FILL - SAND, with silt, trace gravel, dark brown, moist					*ND		B-122 (4'-6')
5.3		5						
	SAND (SP), trace gravel, brown, wet		▼		45	*ND	2	
						*ND		
9.8								
	SILTY CLAY (CL-ML), trace sand and gravel, gray, wet, soft	10			48	*ND	3	
						*ND		
					48	*ND	4	
16.0		15						
	Boring Terminated at 16 Feet							

1" diameter temporary monitoring well
screened from -14 to -4 feet bgs
Top of casing 1' above ground surface

The stratification lines represent the approximate transition between differing soil types and/or rock types; in-situ these transitions may be gradual or may occur at different depths than shown.

* ND indicates a reading of less than the field detection limit (FDL) of one (1) part per million isobutylene equivalents (ppmi).

Advancement Method:
Direct Push

Abandonment Method:
Well left on site per Client

See Appendices for description of field procedures.
See Appendices for description of laboratory procedures and additional data (if any).
See Appendices for explanation of symbols and abbreviations.

Notes:

WATER LEVEL OBSERVATIONS

▽ *4.5' while sampling*

▼ 5.98' below ground surface while groundater sampling

Terracon
650 West Lake Street, Suite 420
Chicago, Illinois

Boring Started: 9/26/2013 | Boring Completed: 9/26/2013
Drill Rig: 6610 DT | Driller: Enviro-Dynamics
Project No.: A2137008

THIS BORING LOG IS NOT VALID IF SEPARATED FROM ORIGINAL REPORT. ENVIRONMENTAL SMART LOG A2137008 - 092613 AND 092713.GPJ TERRACON2012.GDT 10/11/13

BORING LOG NO. B-123

PROJECT: 650 W 83rd St. Phase II ESA

CLIENT: City of Chicago 2FM
Chicago, Illinois

SITE: 650 West 83rd Street
Chicago, Illinois

LOCATION See Exhbit A-2

DEPTH	MATERIAL DESCRIPTION	DEPTH (ft)	WATER LEVEL OBSERVATIONS	SAMPLE TYPE	RECOVERY (In.)	OVA/PID (ppm)	SAMPLE NUMBER	SAMPLE SENT TO LAB (ID NUMBER)
0.5	**FILL - SAND**, trace gravel and silt, dark brown, moist					*ND		B-123 (1'-3')
1.1	**FILL - CRUSHED STONE**							
	SAND (SP), trace gravel, brown, moist				31	*ND	1	
						*ND		B-123 (4'-6')
		5	▽		37	*ND	2	
8.0	***Boring Terminated at 8 Feet***							

The stratification lines represent the approximate transition between differing soil types and/or rock types; in-situ these transitions may be gradual or may occur at different depths than shown.

* ND indicates a reading of less than the field detection limit (FDL) of one (1) part per million isobutylene equivalents (ppmi).

Advancement Method:
Direct Push

Abandonment Method:
Boring backfilled with soil cuttings upon completion.

See Appendices for description of field procedures.
See Appendices for description of laboratory procedures and additional data (if any).
See Appendices for explanation of symbols and abbreviations.

Notes:

WATER LEVEL OBSERVATIONS

▽ *6' while sampling*

Terracon
650 West Lake Street, Suite 420
Chicago, Illinois

Boring Started: 9/26/2013 | Boring Completed: 9/26/2013
Drill Rig: 6610 DT | Driller: Enviro-Dynamics
Project No.: A2137008

THIS BORING LOG IS NOT VALID IF SEPARATED FROM ORIGINAL REPORT. ENVIRONMENTAL SMART LOG A2137008 - 092613 AND 092713.GPJ TERRACON2012.GDT 10/11/13

BORING LOG NO. B-124

PROJECT: 650 W 83rd St. Phase II ESA

CLIENT: City of Chicago 2FM
Chicago, Illinois

SITE: 650 West 83rd Street
Chicago, Illinois

GRAPHIC LOG	DEPTH	MATERIAL DESCRIPTION	DEPTH (ft)	WATER LEVEL OBSERVATIONS	SAMPLE TYPE	RECOVERY (In.)	OVA/PID (ppm)	SAMPLE NUMBER	SAMPLE SENT TO LAB (ID NUMBER)
		LOCATION See Exhbit A-2							
		FILL - SANDY CLAY, WITH GRAVEL, with brick and glass, dark brown, dry					*ND		B-124 (1'-3')
						32	*ND	1	
	4.0			▽					
		FILL - SAND, trace gravel, dark brown, wet	5				*ND		B-124 (4'-6')
						20	*ND	2	
	8.0								
		Boring Terminated at 8 Feet							

The stratification lines represent the approximate transition between differing soil types and/or rock types; in-situ these transitions may be gradual or may occur at different depths than shown.

* ND indicates a reading of less than the field detection limit (FDL) of one (1) part per million isobutylene equivalents (ppmi).

Advancement Method:
Direct Push

Abandonment Method:
Boring backfilled with soil cuttings upon completion.

See Appendices for description of field procedures.
See Appendices for description of laboratory procedures and additional data (if any).
See Appendices for explanation of symbols and abbreviations.

Notes:

WATER LEVEL OBSERVATIONS

▽ *4' while sampling*

Terracon
650 West Lake Street, Suite 420
Chicago, Illinois

Boring Started: 9/27/2013 | Boring Completed: 9/27/2013
Drill Rig: 6610 DT | Driller: Enviro-Dynamics
Project No.: A2137008

THIS BORING LOG IS NOT VALID IF SEPARATED FROM ORIGINAL REPORT. ENVIRONMENTAL SMART LOG A2137008 - 092613 AND 092713.GPJ TERRACON2012.GDT 10/11/13

BORING LOG NO. B-125

PROJECT: 650 W 83rd St. Phase II ESA

CLIENT: City of Chicago 2FM
Chicago, Illinois

SITE: 650 West 83rd Street
Chicago, Illinois

LOCATION See Exhbit A-2

DEPTH	MATERIAL DESCRIPTION	DEPTH (ft)	WATER LEVEL OBSERVATIONS	SAMPLE TYPE	RECOVERY (In.)	OVA/PID (ppm)	SAMPLE NUMBER	SAMPLE SENT TO LAB (ID NUMBER)
	FILL - SILTY CLAY, WITH SAND AND GRAVEL, brown, dry					*ND		B-125 (1'-3')
2.2					33	*ND	1	
	FILL - SAND, trace gravel, dark brown, moist		▽					
						*ND		B-125 (4'-6')
5.6		5						
	SANDY SILT (ML), brown and gray, wet, medium dense				36	*ND	2	
8.0								
	Boring Terminated at 8 Feet							

The stratification lines represent the approximate transition between differing soil types and/or rock types; in-situ these transitions may be gradual or may occur at different depths than shown.

* ND indicates a reading of less than the field detection limit (FDL) of one (1) part per million isobutylene equivalents (ppmi).

Advancement Method:
Direct Push

Abandonment Method:
Boring backfilled with soil cuttings upon completion.

See Appendices for description of field procedures.
See Appendices for description of laboratory procedures and additional data (if any).
See Appendices for explanation of symbols and abbreviations.

Notes:

WATER LEVEL OBSERVATIONS

▽ *4' while sampling*

Terracon
650 West Lake Street, Suite 420
Chicago, Illinois

Boring Started: 9/27/2013 | Boring Completed: 9/27/2013
Drill Rig: 6610 DT | Driller: Enviro-Dynamics
Project No.: A2137008

THIS BORING LOG IS NOT VALID IF SEPARATED FROM ORIGINAL REPORT. ENVIRONMENTAL SMART LOG A2137008 - 092613 AND 092713.GPJ TERRACON2012.GDT 10/11/13

BORING LOG NO. B-126

PROJECT: 650 W 83rd St. Phase II ESA

CLIENT: City of Chicago 2FM
Chicago, Illinois

SITE: 650 West 83rd Street
Chicago, Illinois

LOCATION See Exhibit A-2

GRAPHIC LOG	DEPTH	MATERIAL DESCRIPTION	DEPTH (ft)	WATER LEVEL OBSERVATIONS	SAMPLE TYPE	RECOVERY (In.)	OVA/PID (ppm)	SAMPLE NUMBER	SAMPLE SENT TO LAB (ID NUMBER)
	0.3	**CONCRETE**					*ND		
		FILL - SAND, SILT AND GRAVEL, brown, dry							B-126 (1'-3')
						19	*ND	1	
	4.0								
		SANDY SILT (ML), trace gravel, brown, wet					*ND		B-126 (4'-6')
			5			22	*ND	2	
	8.0								
		Boring Terminated at 8 Feet							

The stratification lines represent the approximate transition between differing soil types and/or rock types; in-situ these transitions may be gradual or may occur at different depths than shown.

* ND indicates a reading of less than the field detection limit (FDL) of one (1) part per million isobutylene equivalents (ppmi)

Advancement Method:
Direct Push

Abandonment Method:
Boring backfilled with soil cuttings upon completion.

See Appendices for description of field procedures.
See Appendices for description of laboratory procedures and additional data (if any).
See Appendices for explanation of symbols and abbreviations.

Notes:

WATER LEVEL OBSERVATIONS

Terracon
650 West Lake Street, Suite 420
Chicago, Illinois

Boring Started: 9/27/2013 | Boring Completed: 9/27/2013
Drill Rig: 6610 DT | Driller: Enviro-Dynamics
Project No.: A2137008

THIS BORING LOG IS NOT VALID IF SEPARATED FROM ORIGINAL REPORT. ENVIRONMENTAL SMART LOG A2137008 - 092613 AND 092713.GPJ TERRACON2012.GDT 10/11/13

BORING LOG NO. B-26b

PROJECT: 650 W 83rd St. Phase II ESA

CLIENT: City of Chicago 2FM
Chicago, Illinois

SITE: 650 West 83rd Street
Chicago, Illinois

LOCATION See Exhbit A-2

DEPTH	MATERIAL DESCRIPTION	DEPTH (ft)	WATER LEVEL OBSERVATIONS	SAMPLE TYPE	RECOVERY (In.)	OVA/PID (ppm)	SAMPLE NUMBER	SAMPLE SENT TO LAB (ID NUMBER)
	FILL - SANDY LEAN CLAY, with gravel, brick, glass and cinders, dark brown, dry					*ND		B-26b (1'-3')
					31	*ND	1	
	wet		▽					
4.0	***Boring Terminated at 4 Feet***							

The stratification lines represent the approximate transition between differing soil types and/or rock types; in-situ these transitions may be gradual or may occur at different depths than shown.

* ND indicates a reading of less than the field detection limit (FDL) of one (1) part per million isobutylene equivalents (ppmi).

Advancement Method:
Direct Push

Abandonment Method:
Boring backfilled with soil cuttings upon completion.

See Appendices for description of field procedures.
See Appendices for description of laboratory procedures and additional data (if any).
See Appendices for explanation of symbols and abbreviations.

Notes:

WATER LEVEL OBSERVATIONS

▽ *3' while sampling*

Terracon
650 West Lake Street, Suite 420
Chicago, Illinois

Boring Started: 9/27/2013 | Boring Completed: 9/27/2013
Drill Rig: 6610 DT | Driller: Enviro-Dynamics
Project No.: A2137008

THIS BORING LOG IS NOT VALID IF SEPARATED FROM ORIGINAL REPORT. ENVIRONMENTAL SMART LOG A2137008 - 092613 AND 092713.GPJ TERRACON2012.GDT 10/11/13

BORING LOG NO. B-127

PROJECT: 650 W 83rd St. Phase II ESA

CLIENT: City of Chicago 2FM
Chicago, Illinois

SITE: 650 West 83rd Street
Chicago, Illinois

GRAPHIC LOG	LOCATION See Exhbit A-2 DEPTH — MATERIAL DESCRIPTION	DEPTH (ft)	WATER LEVEL OBSERVATIONS	SAMPLE TYPE	RECOVERY (In.)	OVA/PID (ppm)	SAMPLE NUMBER	SAMPLE SENT TO LAB (ID NUMBER)
	FILL - SANDY LEAN CLAY, with gravel, brick, glass and cinders, dark brown, dry					*ND		B-127 (1'-3')
			▽		29	*ND	1	
	wet 4.0							
	Boring Terminated at 4 Feet							

The stratification lines represent the approximate transition between differing soil types and/or rock types; in-situ these transitions may be gradual or may occur at different depths than shown.

* ND indicates a reading of less than the field detection limit (FDL) of one (1) part per million isobutylene equivalents (ppmi).

Advancement Method:
Direct Push

Abandonment Method:
Boring backfilled with soil cuttings upon completion.

See Appendices for description of field procedures.
See Appendices for description of laboratory procedures and additional data (if any).
See Appendices for explanation of symbols and abbreviations.

Notes:

WATER LEVEL OBSERVATIONS

▽ *3' while sampling*

Terracon
650 West Lake Street, Suite 420
Chicago, Illinois

Boring Started: 9/27/2013 | Boring Completed: 9/27/2013
Drill Rig: 6610 DT | Driller: Enviro-Dynamics
Project No.: A2137008

THIS BORING LOG IS NOT VALID IF SEPARATED FROM ORIGINAL REPORT. ENVIRONMENTAL SMART LOG A2137008 - 092613 AND 092713.GPJ TERRACON2012.GDT 10/11/13

BORING LOG NO. B-128

PROJECT: 650 W 83rd St. Phase II ESA

CLIENT: City of Chicago 2FM
Chicago, Illinois

SITE: 650 West 83rd Street
Chicago, Illinois

LOCATION See Exhibit A-2

GRAPHIC LOG	DEPTH	MATERIAL DESCRIPTION	DEPTH (ft)	WATER LEVEL OBSERVATIONS	SAMPLE TYPE	RECOVERY (in.)	OVA/PID (ppm)	SAMPLE NUMBER	SAMPLE SENT TO LAB (ID NUMBER)
		FILL - SANDY LEAN CLAY, with gravel, brick, glass and cinders, dark brown, dry					*ND		B-128 (1'-3')
	1.1								
		FILL - CRUSHED STONE, with sand and gravel, gray				38	*ND	1	
	4.0								
		Boring Terminated at 4 Feet							

The stratification lines represent the approximate transition between differing soil types and/or rock types; in-situ these transitions may be gradual or may occur at different depths than shown.

* ND indicates a reading of less than the field detection limit (FDL) of one (1) part per million isobutylene equivalents (ppmi).

Advancement Method:
Direct Push

Abandonment Method:
Boring backfilled with soil cuttings upon completion.

See Appendices for description of field procedures.
See Appendices for description of laboratory procedures and additional data (if any).
See Appendices for explanation of symbols and abbreviations.

Notes:

WATER LEVEL OBSERVATIONS

Terracon
650 West Lake Street, Suite 420
Chicago, Illinois

Boring Started: 9/27/2013 | Boring Completed: 9/27/2013
Drill Rig: 6610 DT | Driller: Enviro-Dynamics
Project No.: A2137008

THIS BORING LOG IS NOT VALID IF SEPARATED FROM ORIGINAL REPORT. ENVIRONMENTAL SMART LOG A2137008 - 092613 AND 092713.GPJ TERRACON2012.GDT 10/11/13

BORING LOG NO. B-129

PROJECT: 650 W 83rd St. Phase II ESA

CLIENT: City of Chicago 2FM
Chicago, Illinois

SITE: 650 West 83rd Street
Chicago, Illinois

LOCATION See Exhbit A-2

DEPTH	MATERIAL DESCRIPTION	DEPTH (ft)	WATER LEVEL OBSERVATIONS	SAMPLE TYPE	RECOVERY (in.)	OVA/PID (ppm)	SAMPLE NUMBER	SAMPLE SENT TO LAB (ID NUMBER)
	FILL - SAND AND GRAVEL, with silt, brick and glass, dark brown, dry					*ND		B-129 (1'-3')
			▽		36	*ND	1	
	wet							
4.0	*Boring Terminated at 4 Feet*							

The stratification lines represent the approximate transition between differing soil types and/or rock types; in-situ these transitions may be gradual or may occur at different depths than shown.

* ND indicates a reading of less than the field detection limit (FDL) of one (1) part per million isobutylene equivalents (ppmi).

Advancement Method:
Direct Push

Abandonment Method:
Boring backfilled with soil cuttings upon completion.

See Appendices for description of field procedures.
See Appendices for description of laboratory procedures and additional data (if any).
See Appendices for explanation of symbols and abbreviations.

Notes:

WATER LEVEL OBSERVATIONS

▽ *3' while sampling*

Terracon
650 West Lake Street, Suite 420
Chicago, Illinois

Boring Started: 9/27/2013 | Boring Completed: 9/27/2013
Drill Rig: 6610 DT | Driller: Enviro-Dynamics
Project No.: A2137008

THIS BORING LOG IS NOT VALID IF SEPARATED FROM ORIGINAL REPORT. ENVIRONMENTAL SMART LOG A2137008 - 092613 AND 092713.GPJ TERRACON2012.GDT 10/11/13

BORING LOG NO. B-130

PROJECT: 650 W 83rd St. Phase II ESA

CLIENT: City of Chicago 2FM
Chicago, Illinois

SITE: 650 West 83rd Street
Chicago, Illinois

LOCATION See Exhbit A-2

DEPTH	MATERIAL DESCRIPTION	DEPTH (ft)	WATER LEVEL OBSERVATIONS	SAMPLE TYPE	RECOVERY (in.)	OVA/PID (ppm)	SAMPLE NUMBER	SAMPLE SENT TO LAB (ID NUMBER)
	FILL - SILTY SAND, with gravel, brick, glass and cinders, dark brown, dry					*ND		B-130 (1'-3')
					38	*ND	1	
4.0			▽					
	SILTY SAND (SM), trace gravel, brown, wet					*ND		B-130 (4'-6')
5.2		5						
	SILTY CLAY (CL-ML), trace sand and gravel, gray, wet				29	*ND	2	
8.0								
	Boring Terminated at 8 Feet							

The stratification lines represent the approximate transition between differing soil types and/or rock types; in-situ these transitions may be gradual or may occur at different depths than shown.

* ND indicates a reading of less than the field detection limit (FDL) of one (1) part per million isobutylene equivalents (ppmi).

Advancement Method:
Direct Push

Abandonment Method:
Boring backfilled with soil cuttings upon completion.

See Appendices for description of field procedures.
See Appendices for description of laboratory procedures and additional data (if any).
See Appendices for explanation of symbols and abbreviations.

Notes:

WATER LEVEL OBSERVATIONS

▽ *4' while sampling*

Terracon
650 West Lake Street, Suite 420
Chicago, Illinois

Boring Started: 9/27/2013 | Boring Completed: 9/27/2013
Drill Rig: 6610 DT | Driller: Enviro-Dynamics
Project No.: A2137008

THIS BORING LOG IS NOT VALID IF SEPARATED FROM ORIGINAL REPORT. ENVIRONMENTAL SMART LOG A2137008 - 092613 AND 092713.GPJ TERRACON2012.GDT 10/11/13

BORING LOG NO. B-131

PROJECT: 650 W 83rd St. Phase II ESA

CLIENT: City of Chicago 2FM
Chicago, Illinois

SITE: 650 West 83rd Street
Chicago, Illinois

LOCATION See Exhibit A-2

GRAPHIC LOG	DEPTH	MATERIAL DESCRIPTION	DEPTH (ft)	WATER LEVEL OBSERVATIONS	SAMPLE TYPE	RECOVERY (in.)	OVA/PID (ppm)	SAMPLE NUMBER	SAMPLE SENT TO LAB (ID NUMBER)
		FILL - SAND AND GRAVEL, with silt, brown, moist					*ND		B-131 (1'-3')
						28	*ND	1	
	4.0			▽					
		SAND (SM), trace gravel and silt, dark brown, wet	5				*ND		B-131 (4'-6')
						24	*ND	2	
	8.0								
		Boring Terminated at 8 Feet							

The stratification lines represent the approximate transition between differing soil types and/or rock types; in-situ these transitions may be gradual or may occur at different depths than shown.

* ND indicates a reading of less than the field detection limit (FDL) of one (1) part per million isobutylene equivalents (ppmi).

Advancement Method:
Direct Push

Abandonment Method:
Boring backfilled with soil cuttings upon completion.

See Appendices for description of field procedures.
See Appendices for description of laboratory procedures and additional data (if any).
See Appendices for explanation of symbols and abbreviations.

Notes:

WATER LEVEL OBSERVATIONS

▽ *4' while sampling*

Terracon
650 West Lake Street, Suite 420
Chicago, Illinois

Boring Started: 9/27/2013 | Boring Completed: 9/27/2013
Drill Rig: 6610 DT | Driller: Enviro-Dynamics
Project No.: A2137008

THIS BORING LOG IS NOT VALID IF SEPARATED FROM ORIGINAL REPORT. ENVIRONMENTAL SMART LOG A2137008 - 092613 AND 092713.GPJ TERRACON2012.GDT 10/11/13

BORING LOG NO. B-132

PROJECT: 650 W 83rd St. Phase II ESA

CLIENT: City of Chicago 2FM
Chicago, Illinois

SITE: 650 West 83rd Street
Chicago, Illinois

LOCATION See Exhbit A-2

GRAPHIC LOG	DEPTH	MATERIAL DESCRIPTION	DEPTH (ft)	WATER LEVEL OBSERVATIONS	SAMPLE TYPE	RECOVERY (In.)	OVA/PID (ppm)	SAMPLE NUMBER	SAMPLE SENT TO LAB (ID NUMBER)
		FILL - SILTY SAND, with gravel, brick, and glass, dark brown, dry					*ND		B-132 (1'-3')
				▽		30	*ND	1	
	4.0								
		SILTY SAND (SM), trace gravel, gray, wet, very soft	5				*ND		B-132 (4'-6')
	5.7								
		SANDY SILT (ML), gray, wet				24	*ND	2	
	8.0								
		Boring Terminated at 8 Feet							

The stratification lines represent the approximate transition between differing soil types and/or rock types; in-situ these transitions may be gradual or may occur at different depths than shown.

* ND indicates a reading of less than the field detection limit (FDL) of one (1) part per million isobutylene equivalents (ppmi).

Advancement Method:
Direct Push

Abandonment Method:
Boring backfilled with soil cuttings upon completion.

See Appendices for description of field procedures.
See Appendices for description of laboratory procedures and additional data (if any).
See Appendices for explanation of symbols and abbreviations.

Notes:

WATER LEVEL OBSERVATIONS

▽ *3' while sampling*

Terracon
650 West Lake Street, Suite 420
Chicago, Illinois

Boring Started: 9/27/2013 | Boring Completed: 9/27/2013
Drill Rig: 6610 DT | Driller: Enviro-Dynamics
Project No.: A2137008

THIS BORING LOG IS NOT VALID IF SEPARATED FROM ORIGINAL REPORT. ENVIRONMENTAL SMART LOG A2137008 - 092613 AND 092713.GPJ TERRACON2012.GDT 10/11/13

BORING LOG NO. B-133

PROJECT: 650 W 83rd St. Phase II ESA

CLIENT: City of Chicago 2FM
Chicago, Illinois

SITE: 650 West 83rd Street
Chicago, Illinois

LOCATION See Exhbit A-2

DEPTH	MATERIAL DESCRIPTION	DEPTH (ft)	WATER LEVEL OBSERVATIONS	SAMPLE TYPE	RECOVERY (in.)	OVA/PID (ppm)	SAMPLE NUMBER	SAMPLE SENT TO LAB (ID NUMBER)
	FILL - SILT, WITH SAND, trace gravel, dark brown, moist					*ND		B-133 (1'-3')
			▽		36	*ND	1	
	wet							
4.0								
	FILL - SANDY SILT, dark brown, wet					*ND		B-133 (4'-6')
		5			12	*ND	2	
8.0								
	Boring Terminated at 8 Feet							

The stratification lines represent the approximate transition between differing soil types and/or rock types; in-situ these transitions may be gradual or may occur at different depths than shown.

* ND indicates a reading of less than the field detection limit (FDL) of one (1) part per million isobutylene equivalents (ppmi).

Advancement Method:
Direct Push

Abandonment Method:
Boring backfilled with soil cuttings upon completion.

See Appendices for description of field procedures.
See Appendices for description of laboratory procedures and additional data (if any).
See Appendices for explanation of symbols and abbreviations.

Notes:

WATER LEVEL OBSERVATIONS

▽ *2.5' while sampling*

Terracon
650 West Lake Street, Suite 420
Chicago, Illinois

Boring Started: 9/27/2013 | Boring Completed: 9/27/2013
Drill Rig: 6610 DT | Driller: Enviro-Dynamics
Project No.: A2137008

THIS BORING LOG IS NOT VALID IF SEPARATED FROM ORIGINAL REPORT. ENVIRONMENTAL SMART LOG A2137008 - 092613 AND 092713.GPJ TERRACON2012.GDT 10/11/13

PROBE LOG NO. B-201

PROJECT: 650 W. 83rd Street SRP

CLIENT: City of Chicago - Dept. of Fleet & Facility Mgmt.
Chicago, Illinois

SITE: 650 W. 83rd Street
Chicago, Illinois

LOCATION See Exhibit 3

DEPTH	MATERIAL DESCRIPTION	DEPTH (ft)	WATER LEVEL OBSERVATIONS	SAMPLE TYPE	RECOVERY (In.)	OVA/PID (ppm)	SAMPLE NUMBER	SAMPLE SENT TO LAB (ID NUMBER)
	FILL - SILTY CLAY, trace sand, brown					*ND		
	Concrete seam 4" thick with crushed limestone, gray				45		1	
5.0						*ND		B-201 (4'-5')
	Probe Terminated at 5 Feet	5						

The stratification lines represent the approximate transition between differing soil types and/or rock types; in-situ these transitions may be gradual or may occur at different depths than shown.

* ND indicates a reading of less than the field detection limit (FDL) of one (1) part per million isobutylene equivalents (ppmi).

Advancement Method:
Direct Push

Abandonment Method:
Boring backfilled with soil cuttings upon completion.

Notes:

WATER LEVEL OBSERVATIONS

None while drilling

None while at the completion of boring

Terracon
650 West Lake Street, Suite 420
Chicago, Illinois

Probe Started: 2/20/2015	Probe Completed: 2/20/2015
Drill Rig: Geo Probe 6610	Driller: Earth Solutions
Project No.: A2157000	

THIS BORING LOG IS NOT VALID IF SEPARATED FROM ORIGINAL REPORT. ENVIRONMENTAL SMART LOG A2157000.GPJ TERRACON2012.GDT 3/4/15

PROBE LOG NO. B-202

PROJECT: 650 W. 83rd Street SRP

CLIENT: City of Chicago - Dept. of Fleet & Facility Mgmt.
Chicago, Illinois

SITE: 650 W. 83rd Street
Chicago, Illinois

LOCATION See Exhibit 3

DEPTH	MATERIAL DESCRIPTION	DEPTH (ft)	WATER LEVEL OBSERVATIONS	SAMPLE TYPE	RECOVERY (in.)	OVA/PID (ppm)	SAMPLE NUMBER	SAMPLE SENT TO LAB (ID NUMBER)
	FILL - SILTY CLAY, trace sand, glass, cinders and gravel, brown					*ND		
					32		1	
	Crushed fill, black, wet					*ND		B-202 (4'-5')
5.0		5						
	Probe Terminated at 5 Feet							

The stratification lines represent the approximate transition between differing soil types and/or rock types; in-situ these transitions may be gradual or may occur at different depths than shown.

* ND indicates a reading of less than the field detection limit (FDL) of one (1) part per million isobutylene equivalents (ppmi).

Advancement Method:
Direct Push

Abandonment Method:
Boring backfilled with soil cuttings upon completion.

Notes:

WATER LEVEL OBSERVATIONS

None while drilling

None while at the completion of boring

Terracon
650 West Lake Street, Suite 420
Chicago, Illinois

Probe Started: 2/20/2015 | Probe Completed: 2/20/2015

Drill Rig: Geo Probe 6610 | Driller: Earth Solutions

Project No.: A2157000

THIS BORING LOG IS NOT VALID IF SEPARATED FROM ORIGINAL REPORT. ENVIRONMENTAL SMART LOG A2157000.GPJ TERRACON2012.GDT 3/4/15

PROBE LOG NO. B-203

PROJECT: 650 W. 83rd Street SRP

CLIENT: City of Chicago - Dept. of Fleet & Facility Mgmt.
Chicago, Illinois

SITE: 650 W. 83rd Street
Chicago, Illinois

LOCATION See Exhibit 3

DEPTH	MATERIAL DESCRIPTION	DEPTH (ft)	WATER LEVEL OBSERVATIONS	SAMPLE TYPE	RECOVERY (in.)	OVA/PID (ppm)	SAMPLE NUMBER	SAMPLE SENT TO LAB (ID NUMBER)
	FILL - SILTY CLAY, brown					*ND		
	2" thick slag, crushed asphalt and stone							
2.0	FILL - SAND, trace crushed stone, light brown				37		1	
3.0	FILL - SILTY CLAY, trace sand, light gray, soft					*ND		
		5						
						*ND		
7.0	FILL - CRUSHED BRICK, GRAVEL AND ASPHALT, black				36		2	B-203 (6'-8')
						*ND		
10.0	*Probe Terminated at 10 Feet*	10						

The stratification lines represent the approximate transition between differing soil types and/or rock types; in-situ these transitions may be gradual or may occur at different depths than shown.

* ND indicates a reading of less than the field detection limit (FDL) of one (1) part per million isobutylene equivalents (ppm).

Advancement Method:
Direct Push

Abandonment Method:
Boring backfilled with soil cuttings upon completion.

Notes:

WATER LEVEL OBSERVATIONS

None while drilling

None while at the completion of boring

Terracon
650 West Lake Street, Suite 420
Chicago, Illinois

Probe Started: 2/20/2015 | Probe Completed: 2/20/2015

Drill Rig: Geo Probe 6610 | Driller: Earth Solutions

Project No.: A2157000

THIS BORING LOG IS NOT VALID IF SEPARATED FROM ORIGINAL REPORT. ENVIRONMENTAL SMART LOG A2157000.GPJ TERRACON2012.GDT 3/4/15

PROBE LOG NO. B-204

PROJECT: 650 W. 83rd Street SRP

CLIENT: City of Chicago - Dept. of Fleet & Facility Mgmt.
Chicago, Illinois

SITE: 650 W. 83rd Street
Chicago, Illinois

LOCATION See Exhibit 3

DEPTH	MATERIAL DESCRIPTION	DEPTH (ft)	WATER LEVEL OBSERVATIONS	SAMPLE TYPE	RECOVERY (in.)	OVA/PID (ppm)	SAMPLE NUMBER	SAMPLE SENT TO LAB (ID NUMBER)
	FILL - SILTY CLAY, trace sand, brown					*ND		
					22		1	
						*ND		B-204 (4'-6')
	with cinders and crushed asphalt with gravel, gray, wet	5				*ND		
	with cinders and crushed asphalt				35		2	
						*ND		
10.0		10						
	Probe Terminated at 10 Feet							

The stratification lines represent the approximate transition between differing soil types and/or rock types; in-situ these transitions may be gradual or may occur at different depths than shown.

* ND indicates a reading of less than the field detection limit (FDL) of one (1) part per million isobutylene equivalents (ppmi).

Advancement Method:
Direct Push

Abandonment Method:
Boring backfilled with soil cuttings upon completion.

Notes:

WATER LEVEL OBSERVATIONS

None while drilling

None while at the completion of boring

Terracon
650 West Lake Street, Suite 420
Chicago, Illinois

Probe Started: 2/20/2015 | Probe Completed: 2/20/2015

Drill Rig: Geo Probe 6610 | Driller: Earth Solutions

Project No.: A2157000

THIS BORING LOG IS NOT VALID IF SEPARATED FROM ORIGINAL REPORT. ENVIRONMENTAL SMART LOG A2157000.GPJ TERRACON2012.GDT 3/4/15

PROBE LOG NO. B-205

PROJECT: 650 W. 83rd Street SRP

CLIENT: City of Chicago - Dept. of Fleet & Facility Mgmt.
Chicago, Illinois

SITE: 650 W. 83rd Street
Chicago, Illinois

LOCATION See Exhibit 3

DEPTH	MATERIAL DESCRIPTION	DEPTH (ft)	WATER LEVEL OBSERVATIONS	SAMPLE TYPE	RECOVERY (in.)	OVA/PID (ppm)	SAMPLE NUMBER	SAMPLE SENT TO LAB (ID NUMBER)
	FILL - SILTY CLAY, trace sand, cinders and crushed gravel, brown					*ND		
					45		1	
						*ND		B-205 (4'-6')
		5						
						*ND		
6.8								
	FILL - SAND, fine to medium grained, black, wet							
	light gray, moist				46		2	
						*ND		
10.0		10						
	Probe Terminated at 10 Feet							

The stratification lines represent the approximate transition between differing soil types and/or rock types; in-situ these transitions may be gradual or may occur at different depths than shown.

* ND indicates a reading of less than the field detection limit (FDL) of one (1) part per million isobutylene equivalents (ppmi).

Advancement Method:
Direct Push

Abandonment Method:
Boring backfilled with soil cuttings upon completion.

Notes:

WATER LEVEL OBSERVATIONS

None while drilling

None while at the completion of boring

Terracon
650 West Lake Street, Suite 420
Chicago, Illinois

Probe Started: 2/20/2015 | Probe Completed: 2/20/2015

Drill Rig: Geo Probe 6610 | Driller: Earth Solutions

Project No.: A2157000

THIS BORING LOG IS NOT VALID IF SEPARATED FROM ORIGINAL REPORT. ENVIRONMENTAL SMART LOG A2157000.GPJ TERRACON2012.GDT 3/4/15

PROBE LOG NO. B-206

PROJECT: 650 W. 83rd Street SRP

CLIENT: City of Chicago - Dept. of Fleet & Facility Mgmt.
Chicago, Illinois

SITE: 650 W. 83rd Street
Chicago, Illinois

LOCATION See Exhibit 3

DEPTH	MATERIAL DESCRIPTION	DEPTH (ft)	RECOVERY (in.)	OVA/PID (ppm)	SAMPLE NUMBER	SAMPLE SENT TO LAB (ID NUMBER)
	FILL - SILTY CLAY, with crushed gravel, light brown			*ND		
	6" crushed gravel seam		33		1	
	light gray			*ND		B-206 (4'-6')
	black, moist, soft	5				
	trace organics, black, wet			*ND		
7.8			41		2	
	FILL - SAND, fine grained, light gray, wet					
8.8						
	FILL - SILTY CLAY, trace sand and gravel, black, moist			*ND		
10.0		10				
	Probe Terminated at 10 Feet					

The stratification lines represent the approximate transition between differing soil types and/or rock types; in-situ these transitions may be gradual or may occur at different depths than shown.

* ND indicates a reading of less than the field detection limit (FDL) of one (1) part per million isobutylene equivalents (ppmi).

Advancement Method:
Direct Push

Abandonment Method:
Boring backfilled with soil cuttings upon completion.

Notes:

WATER LEVEL OBSERVATIONS

None while drilling

None while at the completion of boring

Terracon
650 West Lake Street, Suite 420
Chicago, Illinois

Probe Started: 2/20/2015 | Probe Completed: 2/20/2015

Drill Rig: Geo Probe 6610 | Driller: Earth Solutions

Project No.: A2157000

THIS BORING LOG IS NOT VALID IF SEPARATED FROM ORIGINAL REPORT. ENVIRONMENTAL SMART LOG A2157000.GPJ TERRACON2012.GDT 3/4/15

PROBE LOG NO. B-207

PROJECT: 650 W. 83rd Street SRP

CLIENT: City of Chicago - Dept. of Fleet & Facility Mgmt.
Chicago, Illinois

SITE: 650 W. 83rd Street
Chicago, Illinois

LOCATION See Exhibit 3

DEPTH	MATERIAL DESCRIPTION	DEPTH (ft)	WATER LEVEL OBSERVATIONS	SAMPLE TYPE	RECOVERY (in.)	OVA/PID (ppm)	SAMPLE NUMBER	SAMPLE SENT TO LAB (ID NUMBER)
	FILL - SILTY CLAY, with crushed gravel, brown					*ND		
					43		1	
3.0	FILL - ASPHALT, GLASS AND SAND, black					*ND		
4.5	FILL - SILTY CLAY, trace sand and gravel, gray, moist							
5.0	FILL - SAND WITH GRAVEL, with gravel, medium grained, light brown, wet	5				*ND		
	4" brick seam at 5.5'				37		2	B-207 (6'-8')
9.3						*ND		
	SAND (SP), fine grained, light gray, moist							
10.0	***Probe Terminated at 10 Feet***	10						
	First attempt refusal at 4', moved 2' West.							

The stratification lines represent the approximate transition between differing soil types and/or rock types; in-situ these transitions may be gradual or may occur at different depths than shown.

* ND indicates a reading of less than the field detection limit (FDL) of one (1) part per million isobutylene equivalents (ppmi).

Advancement Method:
Direct Push

Abandonment Method:
Boring backfilled with soil cuttings upon completion.

Notes:

WATER LEVEL OBSERVATIONS

None while drilling

None while at the completion of boring

Terracon
650 West Lake Street, Suite 420
Chicago, Illinois

Probe Started: 2/20/2015	Probe Completed: 2/20/2015
Drill Rig: Geo Probe 6610	Driller: Earth Solutions
Project No.: A2157000	

THIS BORING LOG IS NOT VALID IF SEPARATED FROM ORIGINAL REPORT. ENVIRONMENTAL SMART LOG A2157000.GPJ TERRACON2012.GDT 3/4/15

PROBE LOG NO. B-208

PROJECT: 650 W. 83rd Street SRP

CLIENT: City of Chicago - Dept. of Fleet & Facility Mgmt.
Chicago, Illinois

SITE: 650 W. 83rd Street
Chicago, Illinois

LOCATION See Exhibit 3

GRAPHIC LOG	DEPTH	MATERIAL DESCRIPTION	DEPTH (ft)	WATER LEVEL OBSERVATIONS	SAMPLE TYPE	RECOVERY (in.)	OVA/PID (ppm)	SAMPLE NUMBER	SAMPLE SENT TO LAB (ID NUMBER)
		FILL - CRUSHED GRAVEL, trace sand, black					*ND		
						48		1	
							*ND		
	5.0		5						
		FILL - BRICK AND CRUSHED ASPHALT, black					*ND		
						47		2	B-208 (6'-8')
	9.0						*ND		
		FILL - SAND, fine grained, light gray, moist							
	10.0		10						
		Probe Terminated at 10 Feet							

The stratification lines represent the approximate transition between differing soil types and/or rock types; in-situ these transitions may be gradual or may occur at different depths than shown.

* ND indicates a reading of less than the field detection limit (FDL) of one (1) part per million isobutylene equivalents (ppmi).

Advancement Method:
Direct Push

Abandonment Method:
Boring backfilled with soil cuttings upon completion.

Notes:

WATER LEVEL OBSERVATIONS

None while drilling

None while at the completion of boring

Terracon
650 West Lake Street, Suite 420
Chicago, Illinois

Probe Started: 2/20/2015 | Probe Completed: 2/20/2015

Drill Rig: Geo Probe 6610 | Driller: Earth Solutions

Project No.: A2157000

THIS BORING LOG IS NOT VALID IF SEPARATED FROM ORIGINAL REPORT. ENVIRONMENTAL SMART LOG A2157000.GPJ TERRACON2012.GDT 3/4/15

PROBE LOG NO. B-209

PROJECT: 650 W. 83rd Street SRP

CLIENT: City of Chicago - Dept. of Fleet & Facility Mgmt.
Chicago, Illinois

SITE: 650 W. 83rd Street
Chicago, Illinois

LOCATION See Exhibit 3

DEPTH	MATERIAL DESCRIPTION	DEPTH (ft)	WATER LEVEL OBSERVATIONS	SAMPLE TYPE	RECOVERY (in.)	OVA/PID (ppm)	SAMPLE NUMBER	SAMPLE SENT TO LAB (ID NUMBER)
	FILL - SILTY CLAY, with crushed brick and gravel					*ND		
					41		1	
	@ 3.75' black silty clay, medium stiff					*ND		
		5						
	light gray, with crushed porcelain					*ND		B-209 (6'-8')
7.3								
	FILL - BRICK, GRAVEL, GLASS AND SAND, black, wet				43		2	
						*ND		
10.0		10						
	Probe Terminated at 10 Feet							

The stratification lines represent the approximate transition between differing soil types and/or rock types; in-situ these transitions may be gradual or may occur at different depths than shown.

* ND indicates a reading of less than the field detection limit (FDL) of one (1) part per million isobutylene equivalents (ppmi).

Advancement Method:
Direct Push

Abandonment Method:
Boring backfilled with soil cuttings upon completion.

Notes:

WATER LEVEL OBSERVATIONS

None while drilling

None while at the completion of boring

Terracon
650 West Lake Street, Suite 420
Chicago, Illinois

Probe Started: 2/20/2015 | Probe Completed: 2/20/2015

Drill Rig: Geo Probe 6610 | Driller: Earth Solutions

Project No.: A2157000

THIS BORING LOG IS NOT VALID IF SEPARATED FROM ORIGINAL REPORT. ENVIRONMENTAL SMART LOG A2157000.GPJ TERRACON2012.GDT 3/4/15

PROBE LOG NO. B-210

PROJECT: 650 W. 83rd Street SRP

CLIENT: City of Chicago - Dept. of Fleet & Facility Mgmt.
Chicago, Illinois

SITE: 650 W. 83rd Street
Chicago, Illinois

LOCATION See Exhibit 3

DEPTH	MATERIAL DESCRIPTION	DEPTH (ft)	WATER LEVEL OBSERVATIONS	SAMPLE TYPE	RECOVERY (in.)	OVA/PID (ppm)	SAMPLE NUMBER	SAMPLE SENT TO LAB (ID NUMBER)
	FILL - SILTY CLAY, with sand, cinders, brick and gravel, brown					*ND		
					34		1	
4.3	with crushed gravel, black, wet, 4" slag seam at 4'		▽			*ND		
	FILL - SAND, with crushed gravel, brick and asphalt, fine grained, black, wet							
5.0		5						
	FILL - SILTY CLAY, with crushed gravel, black					*ND		B-210 (6'-8') (hold)
7.0								
	FILL - SAND, with crushed brick, gravel and asphalt, medium grained, black, wet				38		2	
	SAND, fine grained, light brown					*ND		
9.8								
10.0	FILL - SILTY CLAY, black, soft	10						
	Probe Terminated at 10 Feet							

The stratification lines represent the approximate transition between differing soil types and/or rock types; in-situ these transitions may be gradual or may occur at different depths than shown.

* ND indicates a reading of less than the field detection limit (FDL) of one (1) part per million isobutylene equivalents (ppmi).

Advancement Method:
Direct Push

Abandonment Method:
Boring backfilled with soil cuttings upon completion.

Notes:

WATER LEVEL OBSERVATIONS

▽ *4.25' while drilling*

None while at the completion of boring

Terracon
650 West Lake Street, Suite 420
Chicago, Illinois

Probe Started: 2/20/2015 | Probe Completed: 2/20/2015

Drill Rig: Geo Probe 6610 | Driller: Earth Solutions

Project No.: A2157000

THIS BORING LOG IS NOT VALID IF SEPARATED FROM ORIGINAL REPORT. ENVIRONMENTAL SMART LOG A2157000.GPJ TERRACON2012.GDT 3/4/15

PROBE LOG NO. B-211

PROJECT: 650 W. 83rd Street SRP

CLIENT: City of Chicago - Dept. of Fleet & Facility Mgmt.
Chicago, Illinois

SITE: 650 W. 83rd Street
Chicago, Illinois

LOCATION See Exhibit 3

GRAPHIC LOG	DEPTH	MATERIAL DESCRIPTION	DEPTH (ft)	WATER LEVEL OBSERVATIONS	SAMPLE TYPE	RECOVERY (in.)	OVA/PID (ppm)	SAMPLE NUMBER	SAMPLE SENT TO LAB (ID NUMBER)
	0.4	FILL - WOOD CHIPS							
		FILL - CINDERS					*ND		
	1.8								
	2.1	FILL - CRUSHED BRICKS							
		FILL - SAND, trace gravel				33		1	
	2.9								
		FILL - SILTY CLAY, gray					*ND		
	5.0		5						
		FILL - SAND, medium grained, brown, wet					*ND		
		black							B-211 (6'-8')
		with brick, cinders and gravel				38		2	
	9.0						*ND		
		FILL - SILTY CLAY, black, soft							
	10.0		10						
		Probe Terminated at 10 Feet							
		first attempt refusal at about 3'							

The stratification lines represent the approximate transition between differing soil types and/or rock types; in-situ these transitions may be gradual or may occur at different depths than shown.

* ND indicates a reading of less than the field detection limit (FDL) of one (1) part per million isobutylene equivalents (ppmi).

Advancement Method:
Direct Push

Abandonment Method:
Boring backfilled with soil cuttings upon completion.

Notes:

WATER LEVEL OBSERVATIONS

None while drilling

None while at the completion of boring

Terracon
650 West Lake Street, Suite 420
Chicago, Illinois

Probe Started: 2/20/2015	Probe Completed: 2/20/2015
Drill Rig: Geo Probe 6610	Driller: Earth Solutions
Project No.: A2157000	

THIS BORING LOG IS NOT VALID IF SEPARATED FROM ORIGINAL REPORT. ENVIRONMENTAL SMART LOG A2157000.GPJ TERRACON2012.GDT 3/4/15

PROBE LOG NO. B-212

PROJECT: 650 W. 83rd Street SRP

CLIENT: City of Chicago - Dept. of Fleet & Facility Mgmt.
Chicago, Illinois

SITE: 650 W. 83rd Street
Chicago, Illinois

LOCATION See Exhibit 3

GRAPHIC LOG	DEPTH	MATERIAL DESCRIPTION	DEPTH (ft)	WATER LEVEL OBSERVATIONS	SAMPLE TYPE	RECOVERY (In.)	OVA/PID (ppm)	SAMPLE NUMBER	SAMPLE SENT TO LAB (ID NUMBER)
		FILL - SILTY CLAY, with gravel and crushed bricks, brown					*ND		
						35		1	B-212 (1'-3')
							*ND		
	5.0		5						
		Probe Terminated at 5 Feet							

The stratification lines represent the approximate transition between differing soil types and/or rock types; in-situ these transitions may be gradual or may occur at different depths than shown.

* ND indicates a reading of less than the field detection limit (FDL) of one (1) part per million isobutylene equivalents (ppmi).

Advancement Method:
Direct Push

Abandonment Method:
Boring backfilled with soil cuttings upon completion.

Notes:

WATER LEVEL OBSERVATIONS

None while drilling

None while at the completion of boring

Terracon
650 West Lake Street, Suite 420
Chicago, Illinois

Probe Started: 2/20/2015 | Probe Completed: 2/20/2015

Drill Rig: Geo Probe 6610 | Driller: Earth Solutions

Project No.: A2157000

THIS BORING LOG IS NOT VALID IF SEPARATED FROM ORIGINAL REPORT. ENVIRONMENTAL SMART LOG A2157000.GPJ TERRACON2012.GDT 3/4/15

PROBE LOG NO. B-213

PROJECT: 650 W. 83rd Street SRP

CLIENT: City of Chicago - Dept. of Fleet & Facility Mgmt.
Chicago, Illinois

SITE: 650 W. 83rd Street
Chicago, Illinois

LOCATION See Exhibit 3

GRAPHIC LOG	DEPTH	MATERIAL DESCRIPTION	DEPTH (ft)	WATER LEVEL OBSERVATIONS	SAMPLE TYPE	RECOVERY (in.)	OVA/PID (ppm)	SAMPLE NUMBER	SAMPLE SENT TO LAB (ID NUMBER)
		FILL - SILTY CLAY, with wood chips, gravel, glass and crushed concrete, brown					*ND		
	2.0	FILL - CRUSHED GRAVEL/CONCRETE				60		1	B-213 (1'-3')
	3.0	FILL - SILTY CLAY, trace slag, gray, moist, hard					*ND		B-213 (4'-6')
	5.0	FILL - CRUSHED FILL, black, wet	5			33	*ND	2	
	8.5	FILL - SILTY CLAY, trace sand and gravel, dark gray, moist, soft					*ND		
	10.0	*Probe Terminated at 10 Feet*	10						

The stratification lines represent the approximate transition between differing soil types and/or rock types; in-situ these transitions may be gradual or may occur at different depths than shown.

* ND indicates a reading of less than the field detection limit (FDL) of one (1) part per million isobutylene equivalents (ppmi).

Advancement Method:
Direct Push

Abandonment Method:
Boring backfilled with soil cuttings upon completion.

Notes:

WATER LEVEL OBSERVATIONS

None while drilling

None while at the completion of boring

Terracon
650 West Lake Street, Suite 420
Chicago, Illinois

Probe Started: 2/20/2015	Probe Completed: 2/20/2015
Drill Rig: Geo Probe 6610	Driller: Earth Solutions
Project No.: A2157000	

THIS BORING LOG IS NOT VALID IF SEPARATED FROM ORIGINAL REPORT. ENVIRONMENTAL SMART LOG A2157000.GPJ TERRACON2012.GDT 3/4/15

PROBE LOG NO. B-214

PROJECT: 650 W. 83rd Street SRP

CLIENT: City of Chicago - Dept. of Fleet & Facility Mgmt.
Chicago, Illinois

SITE: 650 W. 83rd Street
Chicago, Illinois

LOCATION See Exhibit 3

GRAPHIC LOG	DEPTH	MATERIAL DESCRIPTION	DEPTH (ft)	WATER LEVEL OBSERVATIONS	SAMPLE TYPE	RECOVERY (in.)	OVA/PID (ppm)	SAMPLE NUMBER	SAMPLE SENT TO LAB (ID NUMBER)
		FILL - WOOD CHIPS							
	1.0	FILL - SILTY CLAY, trace sand, glass, cinders, and brick, light brown					*ND		
						30		1	B-214 (1'-3')
							*ND		
	5.0	*Probe Terminated at 5 Feet*	5						

The stratification lines represent the approximate transition between differing soil types and/or rock types; in-situ these transitions may be gradual or may occur at different depths than shown.

* ND indicates a reading of less than the field detection limit (FDL) of one (1) part per million isobutylene equivalents (ppmi).

Advancement Method:
Direct Push

Abandonment Method:
Boring backfilled with soil cuttings upon completion.

Notes:

WATER LEVEL OBSERVATIONS

None while drilling

None while at the completion of boring

Terracon
650 West Lake Street, Suite 420
Chicago, Illinois

Probe Started: 2/20/2015 | Probe Completed: 2/20/2015

Drill Rig: Geo Probe 6610 | Driller: Earth Solutions

Project No.: A2157000

THIS BORING LOG IS NOT VALID IF SEPARATED FROM ORIGINAL REPORT. ENVIRONMENTAL SMART LOG A2157000.GPJ TERRACON2012.GDT 3/4/15

APPENDIX C
HYDRAULIC CONDUCTIVITY INFORMATION

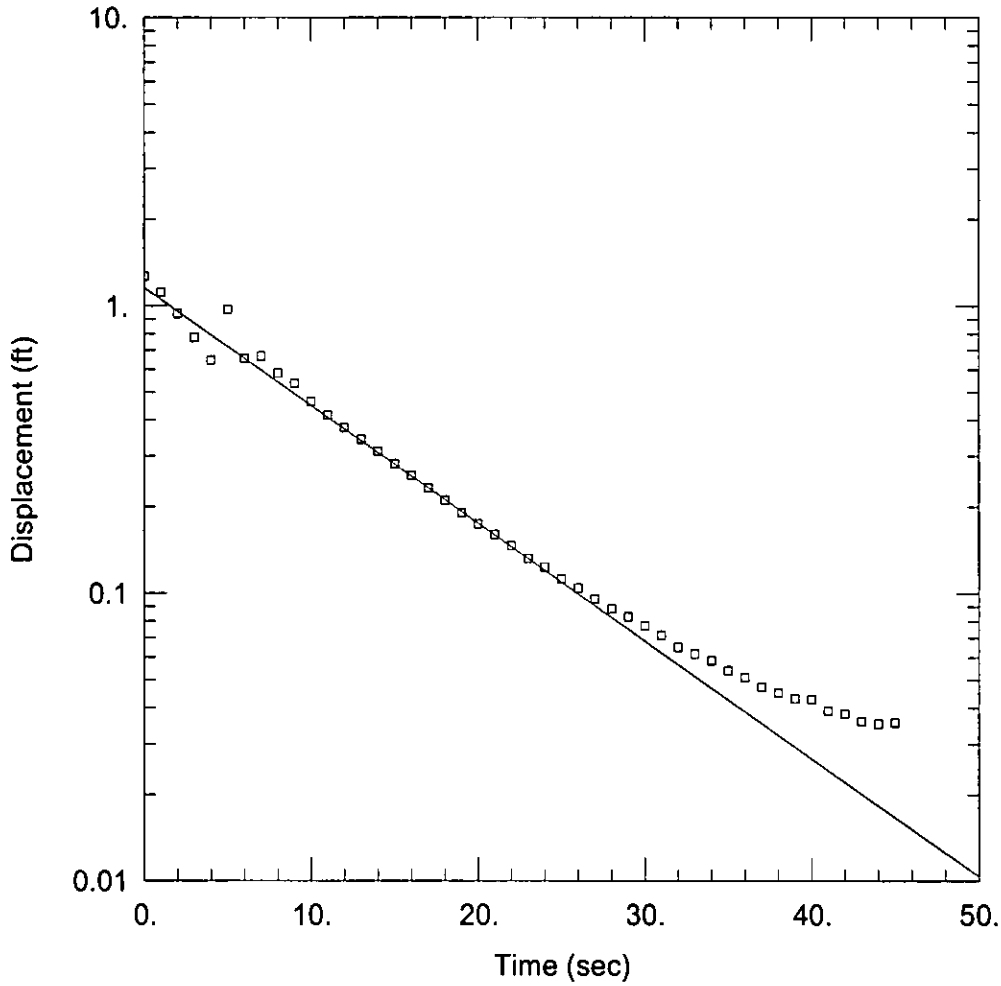

WELL TEST ANALYSIS

Data Set: N:\...\MW-5 pt001 1.aqt
Date: 07/11/13 Time: 13:04:40

PROJECT INFORMATION

Company: Terracon
Client: City of Chicago 2FM
Project: A2137008
Test Well: MW-5
Test Date: 7-3-13

AQUIFER DATA

Saturated Thickness: 9.55 ft Anisotropy Ratio (Kz/Kr): 0.1

WELL DATA (New Well)

Initial Displacement: 1.27 ft
Total Well Penetration Depth: 10. ft
Casing Radius: 0.083 ft
Static Water Column Height: 9.55 ft
Screen Length: 10. ft
Well Radius: 0.33 ft

SOLUTION

Aquifer Model: Unconfined
Solution Method: Bouwer-Rice
K = 0.002659 cm/sec
y0 = 1.147 ft

Data Set: N:\PROJECTS - OTHER OFFICES\CHICAGO - A2\2013\A2137008\Working Files\Calculations-Analysis
Date: 03/03/15
Time: 12:03:06

PROJECT INFORMATION

Company: Terracon
Client: City of Chicago 2FM
Project: A2137008
Test Date: 7-3-13
Test Well: MW-5

AQUIFER DATA

Saturated Thickness: 9.55 ft
Anisotropy Ratio (Kz/Kr): 0.1

SLUG TEST WELL DATA

Test Well: New Well

X Location: 0. ft
Y Location: 0. ft

Initial Displacement: 1.27 ft
Static Water Column Height: 9.55 ft
Casing Radius: 0.083 ft
Well Radius: 0.33 ft
Well Skin Radius: 0.33 ft
Screen Length: 10. ft
Total Well Penetration Depth: 10. ft

No. of Observations: 45

Observation Data

Time (sec)	Displacement (ft)	Time (sec)	Displacement (ft)
1.	1.115	24.	0.1231
2.	0.9395	25.	0.1122
3.	0.7766	26.	0.1042
4.	0.646	27.	0.0955
5.	0.9721	28.	0.0883
6.	0.6548	29.	0.0829
7.	0.6673	30.	0.0771
8.	0.5823	31.	0.0715
9.	0.5365	32.	0.0649
10.	0.4653	33.	0.0617
11.	0.4157	34.	0.0584
12.	0.3756	35.	0.0539
13.	0.3419	36.	0.051
14.	0.311	37.	0.0473
15.	0.2814	38.	0.0451
16.	0.2558	39.	0.0432
17.	0.2317	40.	0.0429
18.	0.2104	41.	0.0392
19.	0.1903	42.	0.0383
20.	0.1738	43.	0.036
21.	0.1599	44.	0.0353
22.	0.1459	45.	0.0356
23.	0.1319		

SOLUTION

Slug Test
Aquifer Model: Unconfined
Solution Method: Bouwer-Rice
ln(Re/rw): 2.568

VISUAL ESTIMATION RESULTS

Estimated Parameters

Parameter	Estimate	
K	0.002659	cm/sec
y0	1.147	ft

T = K*b = 0.7741 cm²/sec

APPENDIX D
WATER SUPPLY INFORMATION

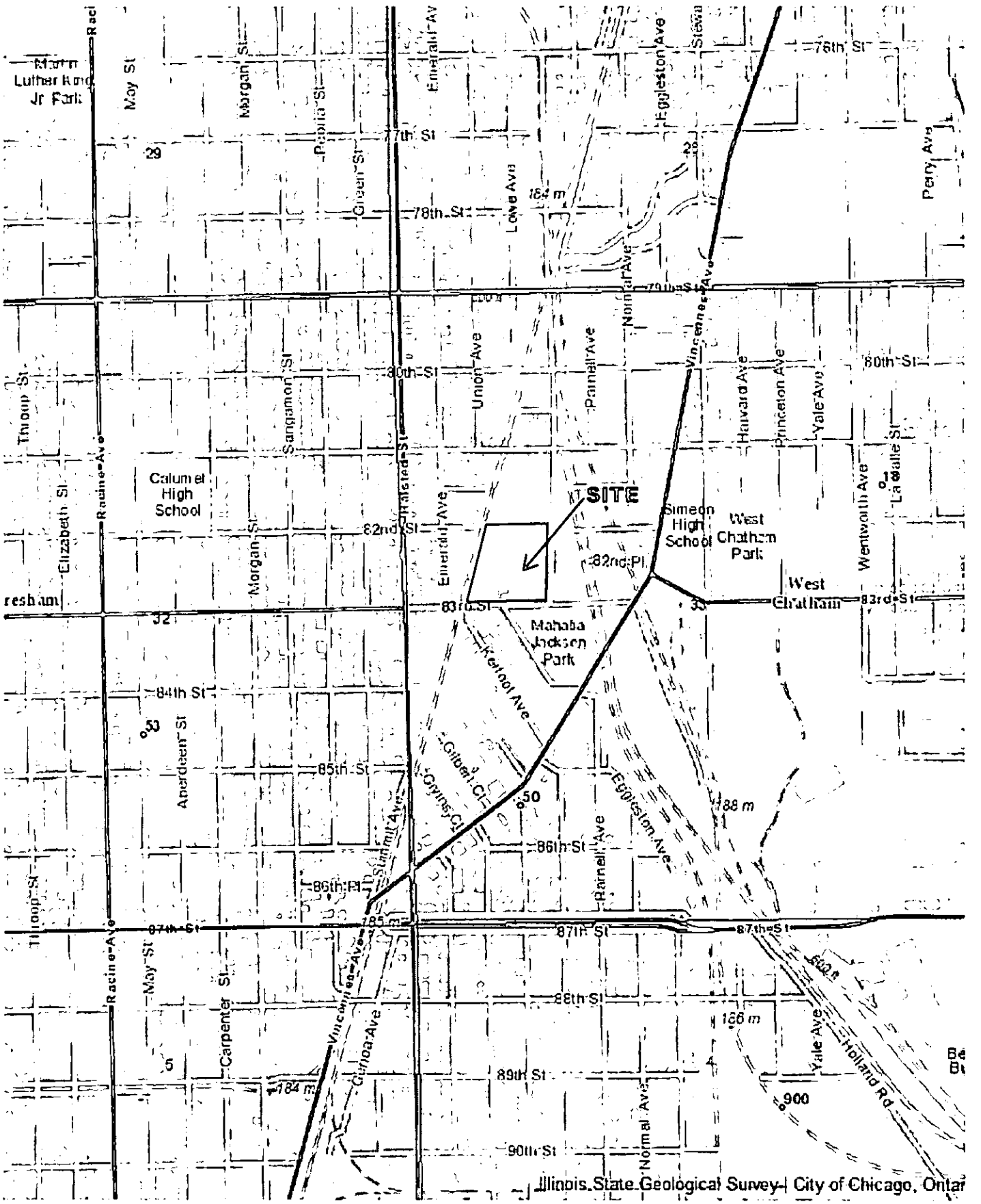

ILLINOIS STATE GEOLOGICAL SURVEY
PRAIRIE RESEARCH INSTITUTE

650 W 83rd Street Map

Printed:Feb 17, 2015

Illinois EPA FOIA Exemption Reference Sheet

SID: 33227

Agency ID: 170001848311 Media File Type: LAND
Bureau ID: 0316715228
Site Name: Chicago, City of-Dept of Fleet Mgmt/Old City Pound
Site Address1: 650 W 83rd St
Site Address2:
Site City: Chicago State: IL Zip: 60620-

This record has been determined to be partially or wholly exempt from public disclosure

Exemption Type:

Portion Removed

Exempt Doc #: 1 **Document Date:** 6 /1 /2015 **Staff:** MED

Document Description: COMPREHENSIVE SITE INVESTIGATION REPORT/REMEDIATION OBJECTIVES REPORT/REMEDIAL ACTION PLAN APPENDIX D

Category ID: 31A **Category Description:** SITE REMEDIATION - TECHNICAL **Exempt Type:** Portion Removed

Permit ID: **Date of Determination:** 6 /8 /2015

Mehta, Shweta D

From: Beard, Elaine <Elaine.Beard@Illinois.gov>
Sent: Wednesday, February 18, 2015 12:06 PM
To: Mehta, Shweta D
Cc: Tosetti, Jamie
Subject: RE: water well search

The Department's Division of Environmental Health can perform a record search on any well which is classified a non-community public water supply. A non-community public water supply is non-residential and serves at least 25 or more individuals. Staff searched the records and did not find any information regarding the specified property.

The Division does not retain information on community water wells, semi-private or private water wells (those wells owned by individuals). Information regarding these wells may be obtained by contacting the Illinois State Water Survey, 2204 Griffith Drive, Champaign, IL 61820, telephone 217-333-9043.

From: Mehta, Shweta D [mailto:Shweta.Mehta@terracon.com]
Sent: Tuesday, February 17, 2015 3:55 PM
To: Beard, Elaine
Cc: Tosetti, Jamie
Subject: RE: water well search

Hi Elaine,

Can you please email me the record of non-community public water wells within **Township 38N, Range 14E, Section 33**?

Site Location:
Cook County - 650 West 83rd Street, Chicago, Illinois

Let me know if you have questions.

Thanks for your help,

Shweta Mehta
Terracon Consultants, Inc.
650 West Lake Street, Suite 420 I Chicago, IL 60661
P [312] 985-0393 I F [312] 575-0111

Terracon provides environmental, facilities, geotechnical, and materials consulting engineering services delivered with responsiveness, resourcefulness, and reliability.

Private and confidential as detailed here (www.terracon.com/disclaimer). If you cannot access hyperlink, please e-mail sender.

Illinois Department of Public Health
Environmental Health
Pat Quinn, Governor

Water Wells

Approximately 5,000 new water wells are constructed and 2,700 abandoned wells are sealed in Illinois each year. A major consideration in constructing these wells is to prevent contamination from the ground surface or shallow ground water, sewage disposal systems and other hazardous sources, from entering the well. To ensure the safety of these water supplies, the division and local health departments review water well installation plans, issue permits for new well construction and inspect wells. The division licenses approximately 730 people who construct wells and/or install water well pumps. Staff consult with the public and local governments about private water supply issues and prepare publications concerning the use of surface water and groundwater supplies.

Water Well Contractor Search

Water Well Contractor Online Renewal

FACT SHEETS

A Safe Water Supply Depends on Location and Construction – Bored Wells
A Safe Water Supply Depends on Location and Construction – Drilled Wells
A Safe Water Supply Depends on Location and Construction – Driven Wells
Abandoned Wells - Hazards to Health and Safety
Alachlor and Atrazine in Groundwater
Arsenic in Groundwater
Commonly Found Substances in Drinking Water and Available Treatment - PDF
Cryptosporidiosis
Emergency Hauling, Storing and Disinfecting of Water Supplies
Giardiasis
Iron in Drinking Water
Nitrates in Drinking Water
Radium in Drinking Water
Vinyl Chloride in Groundwater
Well Sampling for Coliform and Nitrate

FORMS

Installation Report for Water Well Pumps - PDF
Application for Permit to Construct, Modify or Abandon a Water Well - Fillable PDF*
Water Well Construction Report - Fillable PDF*
Water Well Construction Report Instructions - Fillable PDF*
Water Well Sealing Form - Fillable PDF*

Closed Loop Wells

Application for Licensed Water Well Contractor's Closed Loop Well Certification - Fillable PDF*
Application for Permit to Construct, Modify or Seal a Closed Loop Well System - Fillable PDF*
Application for Registration as a State Closed Loop Well Contractor - Fillable PDF*
Examination Application for State Closed Loop Certification - Fillable PDF*

STUDY GUIDES

References Utilized in Examination for Licensed Water Well Contractors - PDF
References Utilized in Examination for Licensed Water Well Pump Installation Contractors - PDF
Study Manual for the Water Well and Pump Installation Contractors License Examinations - PDF

CODES

77 Ill. Adm. Code Part 915 The Illinois Water Well and Pump Installation Contractor's License Code | (Printer Friendly PDF)
77 Ill. Adm. Code Part 920 Illinois Water Well Construction Code | (Printer Friendly PDF)
77 Ill. Adm. Code Part 925 Illinois Water Well Pump Installation Code | (Printer Friendly PDF)

To order a hard copy of any or all of the codes, complete this **order form** and e-mail, mail or fax as instructed.

APPROVED WATER WELL AND CLOSED LOOP WELL CONSTRUCTION MATERIALS

Backflow Preventers - PDF
Closed Loop Well Piping - PDF
Grouts - PDF
Hand Pumps - PDF
Pitless Well Adapters and Units - PDF
Water Well Caps - PDF

GUIDANCE DOCUMENTS

Arsenic in Private Wells
Closed Loop Wells
Dewatering Wells
Monitoring Wells

WATER WELL DATA BASES

Illinois Environmental Protection Agency
http://maps.epa.state.il.us/website/swap/intro.htm

Illinois State Water Survey
http://www.isws.illinois.edu/data/gwdb/

Illinois State Geological Survey
http://www.isgs.uiuc.edu/maps-data-pub/wwdb/launchims.shtml

OTHER GROUNDWATER AND WATER WELL INTERNET SITES

Illinois Environmental Protection Agency
What You Need to Know About Private Drinking Water Wells
List of Accredited Laboratories

Illinois State Geological Survey

Illinois State Water Survey

***Fillable PDF Forms work best with the latest version of the Adobe Acrobat Reader**

Get Acrobat® Reader

NOTE: In order to view PDF documents,
you need a copy of the Adobe Acrobat Reader software.

idph online home

environmental health home

Illinois Department of Public Health
535 West Jefferson Street
Springfield, Illinois 62761
Phone 217-782-4977
Fax 217-782-3987
TTY 800-547-0466
Questions or Comments

Water Well Survey

In 2007, the former Department of Environment (DOE) conducted a potable well survey to determine if active potable wells exist in and nearby the city limits. Information was obtained from the Illinois State Geological Survey (ISGS) regarding all confirmed records of wells installed within the City limits of Chicago and 200 feet beyond. The well search revealed three categories of wells: community water supply wells (CWS); public, non-CWS wells; and private wells.

The well records available from the ISGS and the City's Department of Water Management were reviewed and it was determined that most water wells listed within the city and a 200-foot buffer zone of city limits are no longer in use. Two community water supply wells are confirmed in use outside of the city limits. Twenty-nine wells identified as public, non-community water supply wells and twelve wells identified as private are located within Cook County forest preserve areas. The existence or utilization of these wells was not confirmed. A total of 1,436 private well records were evaluated and the status of sixteen wells, on the edge or outside the city limits, cannot be confirmed. DOE believes that all other wells classified as water wells either do not exist or are no longer in use.

http://www.cityofchicago.org/city/en/depts/dgs/supp_info/water_well_survey.html

APPENDIX E
LABORATORY ANALYTICAL REPORTS

STAT Analysis Corporation
2242 West Harrison St., Suite 200, Chicago, IL 60612-3766
Tel: (312) 733-0551 Fax: (312) 733-2386 STATinfo@STATAnalysis.com
Accreditation Numbers: IEPA ELAP 100445; ORELAP IL300001;AIHA 101160; NVLAP LabCode 101202-

July 24, 2013

Terracon Consultants, Inc.
650 W. Lake Street
Suite 420
Chicago, IL 60661
Telephone: (312) 575-0014
Fax: (312) 575-0111

RE: A2137008, 650 West 83rd STAT Project No: 13060872

Dear Richard O'Brien:

STAT Analysis received 8 samples for the referenced project on 6/25/2013 3:15:00 PM. The analytical results are presented in the following report.

This report is revised to reflect additional analysis requested after the initial report was issued.

All analyses were performed in accordance with the requirements of 35 IAC Part 186 / NELAC standards. Analyses were performed in accordance with methods as referenced on the analytical report. Those analytical results expressed on a dry weight basis are also noted on the analytical report.

All analyses were performed within established holding time criteria, and all Quality Control criteria met EPA or laboratory specifications except when noted in the Case Narrative or Analytical Report. If required, an estimate of uncertainty for the analyses can be provided. A listing of accredited methods/parameters can also be provided.

Thank you for the opportunity to serve you and I look forward to working with you in the future. If you have any questions regarding the enclosed materials, please contact me at (312) 733-0551.

Sincerely,

Catia Giannini
Project Manager

The information contained in this report and any attachments is confidential information intended only for the use of the individual or entities named above. The results of this report relate only to the samples tested. If you have received this report in error, please notify us immediately by phone. This report shall not be reproduced, except in its entirety, unless written approval has been obtained from the laboratory. This analytical report shall become property of the Customer upon payment in full. Otherwise, STAT will be under no obligation to support, defend or discuss the analytical report.

MED

STAT Analysis Corporation

Date: July 24, 2013

Client: Terracon Consultants, Inc.
Project: A2137008, 650 West 83rd
Lab Order: 13060872

Work Order Sample Summary

Lab Sample ID	Client Sample ID	Tag Number	Collection Date	Date Received
13060872-001A	B-34 (1-3)		6/25/2013 8:50:00 AM	6/25/2013
13060872-001B	B-34 (1-3)		6/25/2013 8:50:00 AM	6/25/2013
13060872-002A	B-34 (4-6)		6/25/2013 9:00:00 AM	6/25/2013
13060872-002B	B-34 (4-6)		6/25/2013 9:00:00 AM	6/25/2013
13060872-003A	B-10 (1-3)		6/25/2013 9:30:00 AM	6/25/2013
13060872-003B	B-10 (1-3)		6/25/2013 9:30:00 AM	6/25/2013
13060872-004A	B-10 (4-6)		6/25/2013 10:00:00 AM	6/25/2013
13060872-004B	B-10 (4-6)		6/25/2013 10:00:00 AM	6/25/2013
13060872-005A	B-6 (1-3)		6/25/2013 11:30:00 AM	6/25/2013
13060872-005B	B-6 (1-3)		6/25/2013 11:30:00 AM	6/25/2013
13060872-006A	B-6 (6-8)		6/25/2013 11:45:00 AM	6/25/2013
13060872-006B	B-6 (6-8)		6/25/2013 11:45:00 AM	6/25/2013
13060872-007A	B-5 (1-3)		6/25/2013 10:20:00 AM	6/25/2013
13060872-007B	B-5 (1-3)		6/25/2013 10:20:00 AM	6/25/2013
13060872-008A	B-5 (4-6)		6/25/2013 10:30:00 AM	6/25/2013
13060872-008B	B-5 (4-6)		6/25/2013 10:30:00 AM	6/25/2013

STAT Analysis Corporation

Date: *July 24, 2013*

CLIENT: Terracon Consultants, Inc.
Project: A2137008, 650 West 83rd
Lab Order: 13060872

CASE NARRATIVE

The metals Matrix Spike/Matrix Spike Duplicate (MS/MSD) prepared from sample B-10 (1-3) (13060872-003) had Barium recovery outside control limits (157% (MSD) recovery, QC limits 75-125%; 27% RPD, QC limit <20%). Recovery in the MS was within control limits.

STAT Analysis Corporation
2242 West Harrison St., Suite 200, Chicago, IL 60612-3766
Tel: (312) 733-0551 Fax: (312) 733-2386 STATinfo@STATAnalysis.com
Accreditation Numbers: IEPA ELAP 100445; ORELAP IL300001; AIHA 101160; NVLAP LabCode 101202-

Date Reported: July 24, 2013
Date Printed: July 24, 2013

Client: Terracon Consultants, Inc.
Lab Order: 13060872
Project: A2137008, 650 West 83rd
Lab ID: 13060872-001

Client Sample ID: B-34 (1-3)
Collection Date: 6/25/2013 8:50:00 AM
Matrix: Soil

Analyses	Result	RL	Qualifier	Units	DF	Date Analyzed
PCBs		**SW8082 (SW3550B)**		Prep Date: **6/26/2013**		Analyst: **GVC**
Aroclor 1016	ND	0.096		mg/Kg-dry	1	6/26/2013
Aroclor 1221	ND	0.096		mg/Kg-dry	1	6/26/2013
Aroclor 1232	ND	0.096		mg/Kg-dry	1	6/26/2013
Aroclor 1242	ND	0.096		mg/Kg-dry	1	6/26/2013
Aroclor 1248	ND	0.096		mg/Kg-dry	1	6/26/2013
Aroclor 1254	ND	0.096		mg/Kg-dry	1	6/26/2013
Aroclor 1260	ND	0.096		mg/Kg-dry	1	6/26/2013
Pesticides		**SW8081 (SW3550B)**		Prep Date: **6/26/2013**		Analyst: **GVC**
4,4'-DDD	ND	0.0019		mg/Kg-dry	1	6/26/2013
4,4'-DDE	ND	0.0019		mg/Kg-dry	1	6/26/2013
4,4'-DDT	ND	0.0019		mg/Kg-dry	1	6/26/2013
Aldrin	ND	0.0019		mg/Kg-dry	1	6/26/2013
alpha-BHC	ND	0.0019		mg/Kg-dry	1	6/26/2013
alpha-Chlordane	ND	0.0019		mg/Kg-dry	1	6/26/2013
beta-BHC	ND	0.0019		mg/Kg-dry	1	6/26/2013
Chlordane	ND	0.019		mg/Kg-dry	1	6/26/2013
delta-BHC	ND	0.0019		mg/Kg-dry	1	6/26/2013
Dieldrin	ND	0.0019		mg/Kg-dry	1	6/26/2013
Endosulfan I	ND	0.0019		mg/Kg-dry	1	6/26/2013
Endosulfan II	ND	0.0019		mg/Kg-dry	1	6/26/2013
Endosulfan sulfate	ND	0.0019		mg/Kg-dry	1	6/26/2013
Endrin	ND	0.0019		mg/Kg-dry	1	6/26/2013
Endrin aldehyde	ND	0.0019		mg/Kg-dry	1	6/26/2013
Endrin ketone	ND	0.0019		mg/Kg-dry	1	6/26/2013
gamma-BHC	ND	0.0019		mg/Kg-dry	1	6/26/2013
gamma-Chlordane	ND	0.0019		mg/Kg-dry	1	6/26/2013
Heptachlor	ND	0.0019		mg/Kg-dry	1	6/26/2013
Heptachlor epoxide	ND	0.0019		mg/Kg-dry	1	6/26/2013
Methoxychlor	ND	0.0019		mg/Kg-dry	1	6/26/2013
Toxaphene	ND	0.04		mg/Kg-dry	1	6/26/2013
Herbicides in Soil		**SW8321A (SW3550B)**		Prep Date: **6/26/2013**		Analyst: **MEP**
2,4,5-T	ND	0.004		mg/Kg-dry	1	6/27/2013
2,4,5-TP (Silvex)	ND	0.004		mg/Kg-dry	1	6/27/2013
2,4-D	ND	0.004		mg/Kg-dry	1	6/27/2013
2,4-DB	ND	0.008		mg/Kg-dry	1	6/27/2013
3,5-Dichlorobenzoic Acid	ND	0.004	*	mg/Kg-dry	1	6/27/2013
4-Nitrophenol	ND	0.04	*	mg/Kg-dry	1	6/27/2013

Qualifiers:
ND - Not Detected at the Reporting Limit
J - Analyte detected below quantitation limits
B - Analyte detected in the associated Method Blank
HT - Sample received past holding time
* - Non-accredited parameter
RL - Reporting / Quantitation Limit for the analysis
S - Spike Recovery outside accepted recovery limits
R - RPD outside accepted recovery limits
E - Value above quantitation range
H - Holding time exceeded

STAT Analysis Corporation
2242 West Harrison St., Suite 200, Chicago, IL 60612-3766
Tel: (312) 733-0551 Fax: (312) 733-2386 STATinfo@STATAnalysis.com
Accreditation Numbers: IEPA ELAP 100445; ORELAP IL300001; AIHA 101160; NVLAP LabCode 101202-

Date Reported: July 24, 2013
Date Printed: July 24, 2013

Client: Terracon Consultants, Inc.
Lab Order: 13060872
Project: A2137008, 650 West 83rd
Lab ID: 13060872-001

Client Sample ID: B-34 (1-3)
Collection Date: 6/25/2013 8:50:00 AM
Matrix: Soil

Analyses	Result	RL	Qualifier	Units	DF	Date Analyzed
Herbicides in Soil	**SW8321A (SW3550B)**			Prep Date: **6/26/2013**		Analyst: **MEP**
Acifluorfen	ND	0.004	*	mg/Kg-dry	1	6/27/2013
Chloramben	ND	0.004	*	mg/Kg-dry	1	6/27/2013
Dalapon	ND	0.04		mg/Kg-dry	1	6/27/2013
Dicamba	ND	0.008		mg/Kg-dry	1	6/27/2013
Dichlorprop	ND	0.008		mg/Kg-dry	1	6/27/2013
Dinoseb	ND	0.008		mg/Kg-dry	1	6/27/2013
MCPA	ND	0.008		mg/Kg-dry	1	6/27/2013
MCPP	ND	0.004		mg/Kg-dry	1	6/27/2013
Pentachlorophenol	ND	0.012	*	mg/Kg-dry	1	6/27/2013
Picloram	ND	0.008	*	mg/Kg-dry	1	6/27/2013
Mercury	**SW7471A**			Prep Date: **6/28/2013**		Analyst: **LB**
Mercury	0.42	0.02		mg/Kg-dry	1	6/28/2013
Metals by ICP/MS	**SW6020 (SW3050B)**			Prep Date: **6/26/2013**		Analyst: **JG**
Aluminum	8600	230		mg/Kg-dry	100	6/26/2013
Antimony	ND	2.3		mg/Kg-dry	10	6/26/2013
Arsenic	6.3	1.2		mg/Kg-dry	10	6/26/2013
Barium	170	1.2		mg/Kg-dry	10	6/26/2013
Beryllium	1.9	0.57		mg/Kg-dry	10	6/26/2013
Cadmium	0.68	0.57		mg/Kg-dry	10	6/26/2013
Calcium	33000	690		mg/Kg-dry	100	6/26/2013
Chromium	14	1.2		mg/Kg-dry	10	6/26/2013
Cobalt	6.7	1.2		mg/Kg-dry	10	6/26/2013
Copper	32	2.9		mg/Kg-dry	10	6/26/2013
Iron	19000	340		mg/Kg-dry	100	6/26/2013
Lead	100	0.57		mg/Kg-dry	10	6/26/2013
Magnesium	15000	340		mg/Kg-dry	100	6/26/2013
Manganese	290	1.2		mg/Kg-dry	10	6/26/2013
Nickel	32	1.2		mg/Kg-dry	10	6/26/2013
Potassium	990	34		mg/Kg-dry	10	6/26/2013
Selenium	ND	1.2		mg/Kg-dry	10	6/26/2013
Silver	ND	1.2		mg/Kg-dry	10	6/26/2013
Sodium	1100	69		mg/Kg-dry	10	6/26/2013
Thallium	ND	1.2		mg/Kg-dry	10	6/26/2013
Vanadium	30	1.2		mg/Kg-dry	10	6/26/2013
Zinc	140	5.7		mg/Kg-dry	10	6/26/2013
Semivolatile Organic Compounds by GC/MS	**SW8270C (SW3550B)**			Prep Date: **6/26/2013**		Analyst: **DM**
Acenaphthene	0.37	0.04		mg/Kg-dry	1	6/28/2013

Qualifiers:
ND - Not Detected at the Reporting Limit
J - Analyte detected below quantitation limits
B - Analyte detected in the associated Method Blank
HT - Sample received past holding time
* - Non-accredited parameter
RL - Reporting / Quantitation Limit for the analysis
S - Spike Recovery outside accepted recovery limits
R - RPD outside accepted recovery limits
E - Value above quantitation range
H - Holding time exceeded

STAT Analysis Corporation
2242 West Harrison St., Suite 200, Chicago, IL 60612-3766
Tel: (312) 733-0551 Fax: (312) 733-2386 STATinfo@STATAnalysis.com
Accreditation Numbers: IEPA ELAP 100445; ORELAP IL300001; AIHA 101160; NVLAP LabCode 101202-

Date Reported: July 24, 2013
Date Printed: July 24, 2013

Client: Terracon Consultants, Inc.
Lab Order: 13060872
Project: A2137008, 650 West 83rd
Lab ID: 13060872-001

Client Sample ID: B-34 (1-3)
Collection Date: 6/25/2013 8:50:00 AM
Matrix: Soil

Analyses	Result	RL	Qualifier	Units	DF	Date Analyzed
Semivolatile Organic Compounds by GC/MS	**SW8270C (SW3550B)**			Prep Date: **6/26/2013**		Analyst: **DM**
Acenaphthylene	0.16	0.04		mg/Kg-dry	1	6/28/2013
Aniline	ND	0.4		mg/Kg-dry	1	6/28/2013
Anthracene	1.2	0.04		mg/Kg-dry	1	6/28/2013
Benz(a)anthracene	2.7	0.04		mg/Kg-dry	1	6/28/2013
Benzidine	ND	0.4		mg/Kg-dry	1	6/28/2013
Benzo(a)pyrene	2.5	0.04		mg/Kg-dry	1	6/28/2013
Benzo(b)fluoranthene	2.1	0.04		mg/Kg-dry	1	6/28/2013
Benzo(g,h,i)perylene	1.2	0.04		mg/Kg-dry	1	6/28/2013
Benzo(k)fluoranthene	2.2	0.04		mg/Kg-dry	1	6/28/2013
Benzoic acid	ND	1		mg/Kg-dry	1	6/28/2013
Benzyl alcohol	ND	0.2		mg/Kg-dry	1	6/28/2013
Bis(2-chloroethoxy)methane	ND	0.2		mg/Kg-dry	1	6/28/2013
Bis(2-chloroethyl)ether	ND	0.2		mg/Kg-dry	1	6/28/2013
Bis(2-ethylhexyl)phthalate	ND	1		mg/Kg-dry	1	6/28/2013
4-Bromophenyl phenyl ether	ND	0.2		mg/Kg-dry	1	6/28/2013
Butyl benzyl phthalate	ND	0.2		mg/Kg-dry	1	6/28/2013
Carbazole	0.31	0.2		mg/Kg-dry	1	6/28/2013
4-Chloroaniline	ND	0.2		mg/Kg-dry	1	6/28/2013
4-Chloro-3-methylphenol	ND	0.4		mg/Kg-dry	1	6/28/2013
2-Chloronaphthalene	ND	0.2		mg/Kg-dry	1	6/28/2013
2-Chlorophenol	ND	0.2		mg/Kg-dry	1	6/28/2013
4-Chlorophenyl phenyl ether	ND	0.2		mg/Kg-dry	1	6/28/2013
Chrysene	2.9	0.04		mg/Kg-dry	1	6/28/2013
Dibenz(a,h)anthracene	0.66	0.04		mg/Kg-dry	1	6/28/2013
Dibenzofuran	ND	0.2		mg/Kg-dry	1	6/28/2013
1,2-Dichlorobenzene	ND	0.2		mg/Kg-dry	1	6/28/2013
1,3-Dichlorobenzene	ND	0.2		mg/Kg-dry	1	6/28/2013
1,4-Dichlorobenzene	ND	0.2		mg/Kg-dry	1	6/28/2013
3,3'-Dichlorobenzidine	ND	0.2		mg/Kg-dry	1	6/28/2013
2,4-Dichlorophenol	ND	0.2		mg/Kg-dry	1	6/28/2013
Diethyl phthalate	ND	0.2		mg/Kg-dry	1	6/28/2013
2,4-Dimethylphenol	ND	0.2		mg/Kg-dry	1	6/28/2013
Dimethyl phthalate	ND	0.2		mg/Kg-dry	1	6/28/2013
4,6-Dinitro-2-methylphenol	ND	0.4		mg/Kg-dry	1	6/28/2013
2,4-Dinitrophenol	ND	1		mg/Kg-dry	1	6/28/2013
2,4-Dinitrotoluene	ND	0.04		mg/Kg-dry	1	6/28/2013
2,6-Dinitrotoluene	ND	0.04		mg/Kg-dry	1	6/28/2013
Di-n-butyl phthalate	ND	0.2		mg/Kg-dry	1	6/28/2013

Qualifiers:
ND - Not Detected at the Reporting Limit
J - Analyte detected below quantitation limits
B - Analyte detected in the associated Method Blank
HT - Sample received past holding time
* - Non-accredited parameter
RL - Reporting / Quantitation Limit for the analysis
S - Spike Recovery outside accepted recovery limits
R - RPD outside accepted recovery limits
E - Value above quantitation range
H - Holding time exceeded

STAT Analysis Corporation
2242 West Harrison St., Suite 200, Chicago, IL 60612-3766
Tel: (312) 733-0551 Fax: (312) 733-2386 STATinfo@STATAnalysis.com
Accreditation Numbers: IEPA ELAP 100445; ORELAP IL300001; AIHA 101160; NVLAP LabCode 101202-

Date Reported: July 24, 2013
Date Printed: July 24, 2013

Client: Terracon Consultants, Inc.
Lab Order: 13060872
Project: A2137008, 650 West 83rd
Lab ID: 13060872-001

Client Sample ID: B-34 (1-3)
Collection Date: 6/25/2013 8:50:00 AM
Matrix: Soil

Analyses	Result	RL	Qualifier	Units	DF	Date Analyzed
Semivolatile Organic Compounds by GC/MS	**SW8270C (SW3550B)**			Prep Date: **6/26/2013**		Analyst: **DM**
Di-n-octyl phthalate	ND	0.2		mg/Kg-dry	1	6/28/2013
Fluoranthene	7.5	0.2		mg/Kg-dry	5	7/1/2013
Fluorene	0.42	0.04		mg/Kg-dry	1	6/28/2013
Hexachlorobenzene	ND	0.2		mg/Kg-dry	1	6/28/2013
Hexachlorobutadiene	ND	0.2		mg/Kg-dry	1	6/28/2013
Hexachlorocyclopentadiene	ND	0.2		mg/Kg-dry	1	6/28/2013
Hexachloroethane	ND	0.2		mg/Kg-dry	1	6/28/2013
Indeno(1,2,3-cd)pyrene	1.1	0.04		mg/Kg-dry	1	6/28/2013
Isophorone	ND	0.2		mg/Kg-dry	1	6/28/2013
2-Methylnaphthalene	ND	0.2		mg/Kg-dry	1	6/28/2013
2-Methylphenol	ND	0.2		mg/Kg-dry	1	6/28/2013
4-Methylphenol	ND	0.2		mg/Kg-dry	1	6/28/2013
Naphthalene	0.28	0.04		mg/Kg-dry	1	6/28/2013
2-Nitroaniline	ND	0.2		mg/Kg-dry	1	6/28/2013
3-Nitroaniline	ND	0.2		mg/Kg-dry	1	6/28/2013
4-Nitroaniline	ND	0.2		mg/Kg-dry	1	6/28/2013
2-Nitrophenol	ND	0.2		mg/Kg-dry	1	6/28/2013
4-Nitrophenol	ND	0.4		mg/Kg-dry	1	6/28/2013
Nitrobenzene	ND	0.04		mg/Kg-dry	1	6/28/2013
N-Nitrosodi-n-propylamine	ND	0.04		mg/Kg-dry	1	6/28/2013
N-Nitrosodimethylamine	ND	0.2		mg/Kg-dry	1	6/28/2013
N-Nitrosodiphenylamine	ND	0.04		mg/Kg-dry	1	6/28/2013
2, 2'-oxybis(1-Chloropropane)	ND	0.2		mg/Kg-dry	1	6/28/2013
Pentachlorophenol	ND	0.08		mg/Kg-dry	1	6/28/2013
Phenanthrene	4.5	0.04		mg/Kg-dry	1	6/28/2013
Phenol	ND	0.2		mg/Kg-dry	1	6/28/2013
Pyrene	6.5	0.2		mg/Kg-dry	5	7/1/2013
Pyridine	ND	0.8		mg/Kg-dry	1	6/28/2013
1,2,4-Trichlorobenzene	ND	0.2		mg/Kg-dry	1	6/28/2013
2,4,5-Trichlorophenol	ND	0.2		mg/Kg-dry	1	6/28/2013
2,4,6-Trichlorophenol	ND	0.2		mg/Kg-dry	1	6/28/2013
Volatile Organic Compounds by GC/MS	**SW5035/8260B**			Prep Date: **6/26/2013**		Analyst: **PS**
Acetone	ND	0.062		mg/Kg-dry	1	7/1/2013
Benzene	ND	0.0041		mg/Kg-dry	1	7/1/2013
Bromodichloromethane	ND	0.0041		mg/Kg-dry	1	7/1/2013
Bromoform	ND	0.0041		mg/Kg-dry	1	7/1/2013
Bromomethane	ND	0.0083		mg/Kg-dry	1	7/1/2013
2-Butanone	ND	0.062		mg/Kg-dry	1	7/1/2013

Qualifiers:
ND - Not Detected at the Reporting Limit
J - Analyte detected below quantitation limits
B - Analyte detected in the associated Method Blank
HT - Sample received past holding time
* - Non-accredited parameter
RL - Reporting / Quantitation Limit for the analysis
S - Spike Recovery outside accepted recovery limits
R - RPD outside accepted recovery limits
E - Value above quantitation range
H - Holding time exceeded

STAT Analysis Corporation
2242 West Harrison St., Suite 200, Chicago, IL 60612-3766
Tel: (312) 733-0551 Fax: (312) 733-2386 STATinfo@STATAnalysis.com
Accreditation Numbers: IEPA ELAP 100445; ORELAP IL300001; AIHA 101160; NVLAP LabCode 101202-

Date Reported: July 24, 2013
Date Printed: July 24, 2013

Client: Terracon Consultants, Inc.
Lab Order: 13060872
Project: A2137008, 650 West 83rd
Lab ID: 13060872-001

Client Sample ID: B-34 (1-3)
Collection Date: 6/25/2013 8:50:00 AM
Matrix: Soil

Analyses	Result	RL	Qualifier	Units	DF	Date Analyzed
Volatile Organic Compounds by GC/MS	**SW5035/8260B**			Prep Date: **6/26/2013**		Analyst: **PS**
Carbon disulfide	ND	0.041		mg/Kg-dry	1	7/1/2013
Carbon tetrachloride	ND	0.0041		mg/Kg-dry	1	7/1/2013
Chlorobenzene	ND	0.0041		mg/Kg-dry	1	7/1/2013
Chloroethane	ND	0.0083		mg/Kg-dry	1	7/1/2013
Chloroform	ND	0.0041		mg/Kg-dry	1	7/1/2013
Chloromethane	ND	0.0083		mg/Kg-dry	1	7/1/2013
Dibromochloromethane	ND	0.0041		mg/Kg-dry	1	7/1/2013
1,1-Dichloroethane	ND	0.0041		mg/Kg-dry	1	7/1/2013
1,2-Dichloroethane	ND	0.0041		mg/Kg-dry	1	7/1/2013
1,1-Dichloroethene	ND	0.0041		mg/Kg-dry	1	7/1/2013
cis-1,2-Dichloroethene	ND	0.0041		mg/Kg-dry	1	7/1/2013
trans-1,2-Dichloroethene	ND	0.0041		mg/Kg-dry	1	7/1/2013
1,2-Dichloropropane	ND	0.0041		mg/Kg-dry	1	7/1/2013
cis-1,3-Dichloropropene	ND	0.0017		mg/Kg-dry	1	7/1/2013
trans-1,3-Dichloropropene	ND	0.0017		mg/Kg-dry	1	7/1/2013
Ethylbenzene	ND	0.0041		mg/Kg-dry	1	7/1/2013
2-Hexanone	ND	0.017		mg/Kg-dry	1	7/1/2013
4-Methyl-2-pentanone	ND	0.017		mg/Kg-dry	1	7/1/2013
Methylene chloride	ND	0.0083		mg/Kg-dry	1	7/1/2013
Methyl tert-butyl ether	ND	0.0041		mg/Kg-dry	1	7/1/2013
Styrene	ND	0.0041		mg/Kg-dry	1	7/1/2013
1,1,2,2-Tetrachloroethane	ND	0.0041		mg/Kg-dry	1	7/1/2013
Tetrachloroethene	ND	0.0041		mg/Kg-dry	1	7/1/2013
Toluene	ND	0.0041		mg/Kg-dry	1	7/1/2013
1,1,1-Trichloroethane	ND	0.0041		mg/Kg-dry	1	7/1/2013
1,1,2-Trichloroethane	ND	0.0041		mg/Kg-dry	1	7/1/2013
Trichloroethene	ND	0.0041		mg/Kg-dry	1	7/1/2013
Vinyl chloride	ND	0.0041		mg/Kg-dry	1	7/1/2013
Xylenes, Total	ND	0.012		mg/Kg-dry	1	7/1/2013
Cyanide, Total	**SW9012A**			Prep Date: **6/26/2013**		Analyst: **MDDT**
Cyanide	ND	0.3		mg/Kg-dry	1	6/27/2013
pH (25 °C)	**SW9045C**			Prep Date: **6/26/2013**		Analyst: **RW**
pH	9.2			pH Units	1	6/26/2013
Percent Moisture	**D2974**			Prep Date: **6/27/2013**		Analyst: **SDA**
Percent Moisture	17.4	0.2	*	wt%	1	6/27/2013

Qualifiers:
ND - Not Detected at the Reporting Limit
J - Analyte detected below quantitation limits
B - Analyte detected in the associated Method Blank
HT - Sample received past holding time
* - Non-accredited parameter
RL - Reporting / Quantitation Limit for the analysis
S - Spike Recovery outside accepted recovery limits
R - RPD outside accepted recovery limits
E - Value above quantitation range
H - Holding time exceeded

STAT Analysis Corporation
2242 West Harrison St., Suite 200, Chicago, IL 60612-3766
Tel: (312) 733-0551 Fax: (312) 733-2386 STATinfo@STATAnalysis.com
Accreditation Numbers: IEPA ELAP 100445; ORELAP IL300001; AIHA 101160; NVLAP LabCode 101202-

Date Reported: July 24, 2013
Date Printed: July 24, 2013

Client: Terracon Consultants, Inc.
Lab Order: 13060872
Project: A2137008, 650 West 83rd
Lab ID: 13060872-002

Client Sample ID: B-34 (4-6)
Collection Date: 6/25/2013 9:00:00 AM
Matrix: Soil

Analyses	Result	RL	Qualifier	Units	DF	Date Analyzed
Mercury	**SW7471A**			Prep Date: **6/28/2013**		Analyst: **LB**
Mercury	ND	0.02		mg/Kg-dry	1	6/28/2013
Metals by ICP/MS	**SW6020 (SW3050B)**			Prep Date: **7/1/2013**		Analyst: **JG**
Arsenic	2.4	1.3		mg/Kg-dry	10	7/1/2013
Barium	45	1.3		mg/Kg-dry	10	7/1/2013
Cadmium	ND	0.63		mg/Kg-dry	10	7/1/2013
Chromium	13	1.3		mg/Kg-dry	10	7/1/2013
Lead	19	0.63		mg/Kg-dry	10	7/1/2013
Selenium	ND	1.3		mg/Kg-dry	10	7/1/2013
Silver	ND	1.3		mg/Kg-dry	10	7/1/2013
Semivolatile Organic Compounds by GC/MS	**SW8270C (SW3550B)**			Prep Date: **6/26/2013**		Analyst: **DM**
Acenaphthene	ND	0.043		mg/Kg-dry	1	6/28/2013
Acenaphthylene	ND	0.043		mg/Kg-dry	1	6/28/2013
Anthracene	0.043	0.043		mg/Kg-dry	1	6/28/2013
Benz(a)anthracene	0.1	0.043		mg/Kg-dry	1	6/28/2013
Benzo(a)pyrene	0.098	0.043		mg/Kg-dry	1	6/28/2013
Benzo(b)fluoranthene	0.073	0.043		mg/Kg-dry	1	6/28/2013
Benzo(g,h,i)perylene	0.051	0.043		mg/Kg-dry	1	6/28/2013
Benzo(k)fluoranthene	0.08	0.043		mg/Kg-dry	1	6/28/2013
Chrysene	0.14	0.043		mg/Kg-dry	1	6/28/2013
Dibenz(a,h)anthracene	ND	0.043		mg/Kg-dry	1	6/28/2013
Fluoranthene	0.2	0.043		mg/Kg-dry	1	6/28/2013
Fluorene	ND	0.043		mg/Kg-dry	1	6/28/2013
Indeno(1,2,3-cd)pyrene	ND	0.043		mg/Kg-dry	1	6/28/2013
Naphthalene	ND	0.043		mg/Kg-dry	1	6/28/2013
Phenanthrene	0.22	0.043		mg/Kg-dry	1	6/28/2013
Pyrene	0.26	0.043		mg/Kg-dry	1	6/28/2013
BTEX by GC/MS	**SW5035/8260B**			Prep Date: **6/26/2013**		Analyst: **PS**
Benzene	ND	0.0067		mg/Kg-dry	1	7/1/2013
Ethylbenzene	ND	0.0067		mg/Kg-dry	1	7/1/2013
Toluene	ND	0.0067		mg/Kg-dry	1	7/1/2013
Xylenes, Total	ND	0.02		mg/Kg-dry	1	7/1/2013
Percent Moisture	**D2974**			Prep Date: **6/27/2013**		Analyst: **SDA**
Percent Moisture	24.2	0.2	*	wt%	1	6/27/2013

Qualifiers:
ND - Not Detected at the Reporting Limit
J - Analyte detected below quantitation limits
B - Analyte detected in the associated Method Blank
HT - Sample received past holding time
* - Non-accredited parameter
RL - Reporting / Quantitation Limit for the analysis
S - Spike Recovery outside accepted recovery limits
R - RPD outside accepted recovery limits
E - Value above quantitation range
H - Holding time exceeded

STAT Analysis Corporation
2242 West Harrison St., Suite 200, Chicago, IL 60612-3766
Tel: (312) 733-0551 Fax: (312) 733-2386 STATinfo@STATAnalysis.com
Accreditation Numbers: IEPA ELAP 100445; ORELAP IL300001; AIHA 101160; NVLAP LabCode 101202-

Date Reported: July 24, 2013
Date Printed: July 24, 2013

Client: Terracon Consultants, Inc.
Lab Order: 13060872
Project: A2137008, 650 West 83rd
Lab ID: 13060872-003

Client Sample ID: B-10 (1-3)
Collection Date: 6/25/2013 9:30:00 AM
Matrix: Soil

Analyses	Result	RL	Qualifier	Units	DF	Date Analyzed
Mercury	**SW7471A**			Prep Date: **6/28/2013**		Analyst: **LB**
Mercury	0.026	0.021		mg/Kg-dry	1	6/28/2013
Metals by ICP/MS	**SW6020 (SW3050B)**			Prep Date: **7/1/2013**		Analyst: **JG**
Arsenic	11	1.1		mg/Kg-dry	10	7/1/2013
Barium	41	1.1		mg/Kg-dry	10	7/1/2013
Cadmium	ND	0.55		mg/Kg-dry	10	7/1/2013
Chromium	17	1.1		mg/Kg-dry	10	7/1/2013
Lead	31	0.55		mg/Kg-dry	10	7/1/2013
Selenium	ND	1.1		mg/Kg-dry	10	7/1/2013
Silver	ND	1.1		mg/Kg-dry	10	7/1/2013
Semivolatile Organic Compounds by GC/MS	**SW8270C (SW3550B)**			Prep Date: **6/26/2013**		Analyst: **DM**
Acenaphthene	0.13	0.037		mg/Kg-dry	1	6/28/2013
Acenaphthylene	0.067	0.037		mg/Kg-dry	1	6/28/2013
Anthracene	0.4	0.037		mg/Kg-dry	1	6/28/2013
Benz(a)anthracene	0.83	0.037		mg/Kg-dry	1	6/28/2013
Benzo(a)pyrene	0.76	0.037		mg/Kg-dry	1	6/28/2013
Benzo(b)fluoranthene	0.77	0.037		mg/Kg-dry	1	6/28/2013
Benzo(g,h,i)perylene	0.52	0.037		mg/Kg-dry	1	6/28/2013
Benzo(k)fluoranthene	0.74	0.037		mg/Kg-dry	1	6/28/2013
Chrysene	0.86	0.037		mg/Kg-dry	1	6/28/2013
Dibenz(a,h)anthracene	0.25	0.037		mg/Kg-dry	1	6/28/2013
Fluoranthene	2.2	0.037		mg/Kg-dry	1	6/28/2013
Fluorene	0.32	0.037		mg/Kg-dry	1	6/28/2013
Indeno(1,2,3-cd)pyrene	0.48	0.037		mg/Kg-dry	1	6/28/2013
Naphthalene	0.3	0.037		mg/Kg-dry	1	6/28/2013
Phenanthrene	1.9	0.037		mg/Kg-dry	1	6/28/2013
Pyrene	1.7	0.037		mg/Kg-dry	1	6/28/2013
BTEX by GC/MS	**SW5035/8260B**			Prep Date: **6/26/2013**		Analyst: **PS**
Benzene	ND	0.0043		mg/Kg-dry	1	7/1/2013
Ethylbenzene	ND	0.0043		mg/Kg-dry	1	7/1/2013
Toluene	ND	0.0043		mg/Kg-dry	1	7/1/2013
Xylenes, Total	ND	0.013		mg/Kg-dry	1	7/1/2013
Percent Moisture	**D2974**			Prep Date: **6/27/2013**		Analyst: **SDA**
Percent Moisture	12.0	0.2	*	wt%	1	6/27/2013

Qualifiers:
ND - Not Detected at the Reporting Limit
J - Analyte detected below quantitation limits
B - Analyte detected in the associated Method Blank
HT - Sample received past holding time
* - Non-accredited parameter
RL - Reporting / Quantitation Limit for the analysis
S - Spike Recovery outside accepted recovery limits
R - RPD outside accepted recovery limits
E - Value above quantitation range
H - Holding time exceeded

STAT Analysis Corporation
2242 West Harrison St., Suite 200, Chicago, IL 60612-3766
Tel: (312) 733-0551 Fax: (312) 733-2386 STATinfo@STATAnalysis.com
Accreditation Numbers: IEPA ELAP 100445; ORELAP IL300001; AIHA 101160; NVLAP LabCode 101202-

Date Reported: July 24, 2013
Date Printed: July 24, 2013

Client: Terracon Consultants, Inc.
Lab Order: 13060872
Project: A2137008, 650 West 83rd
Lab ID: 13060872-004

Client Sample ID: B-10 (4-6)
Collection Date: 6/25/2013 10:00:00 AM
Matrix: Soil

Analyses	Result	RL	Qualifier	Units	DF	Date Analyzed
Mercury	**SW7471A**			Prep Date: **6/28/2013**		Analyst: **LB**
Mercury	0.5	0.02		mg/Kg-dry	1	6/28/2013
Metals by ICP/MS	**SW6020 (SW3050B)**			Prep Date: **7/1/2013**		Analyst: **JG**
Arsenic	7.2	1.2		mg/Kg-dry	10	7/1/2013
Barium	80	1.2		mg/Kg-dry	10	7/1/2013
Cadmium	ND	0.61		mg/Kg-dry	10	7/1/2013
Chromium	17	1.2		mg/Kg-dry	10	7/1/2013
Lead	76	0.61		mg/Kg-dry	10	7/1/2013
Selenium	ND	1.2		mg/Kg-dry	10	7/1/2013
Silver	ND	1.2		mg/Kg-dry	10	7/1/2013
Semivolatile Organic Compounds by GC/MS	**SW8270C (SW3550B)**			Prep Date: **6/26/2013**		Analyst: **DM**
Acenaphthene	0.077	0.043		mg/Kg-dry	1	7/1/2013
Acenaphthylene	ND	0.043		mg/Kg-dry	1	7/1/2013
Anthracene	0.17	0.043		mg/Kg-dry	1	7/1/2013
Benz(a)anthracene	0.49	0.043		mg/Kg-dry	1	7/1/2013
Benzo(a)pyrene	0.52	0.043		mg/Kg-dry	1	7/1/2013
Benzo(b)fluoranthene	0.55	0.043		mg/Kg-dry	1	7/1/2013
Benzo(g,h,i)perylene	0.32	0.043		mg/Kg-dry	1	7/1/2013
Benzo(k)fluoranthene	0.39	0.043		mg/Kg-dry	1	7/1/2013
Chrysene	0.59	0.043		mg/Kg-dry	1	7/1/2013
Dibenz(a,h)anthracene	0.17	0.043		mg/Kg-dry	1	7/1/2013
Fluoranthene	0.96	0.043		mg/Kg-dry	1	7/1/2013
Fluorene	0.065	0.043		mg/Kg-dry	1	7/1/2013
Indeno(1,2,3-cd)pyrene	0.28	0.043		mg/Kg-dry	1	7/1/2013
Naphthalene	0.15	0.043		mg/Kg-dry	1	7/1/2013
Phenanthrene	0.66	0.043		mg/Kg-dry	1	7/1/2013
Pyrene	0.93	0.043		mg/Kg-dry	1	7/1/2013
BTEX by GC/MS	**SW5035/8260B**			Prep Date: **6/26/2013**		Analyst: **PS**
Benzene	ND	0.0068		mg/Kg-dry	1	7/1/2013
Ethylbenzene	ND	0.0068		mg/Kg-dry	1	7/1/2013
Toluene	ND	0.0068		mg/Kg-dry	1	7/1/2013
Xylenes, Total	ND	0.02		mg/Kg-dry	1	7/1/2013
Percent Moisture	**D2974**			Prep Date: **6/27/2013**		Analyst: **SDA**
Percent Moisture	22.7	0.2	*	wt%	1	6/27/2013

Qualifiers:
ND - Not Detected at the Reporting Limit
J - Analyte detected below quantitation limits
B - Analyte detected in the associated Method Blank
HT - Sample received past holding time
* - Non-accredited parameter
RL - Reporting / Quantitation Limit for the analysis
S - Spike Recovery outside accepted recovery limits
R - RPD outside accepted recovery limits
E - Value above quantitation range
H - Holding time exceeded

STAT Analysis Corporation
2242 West Harrison St., Suite 200, Chicago, IL 60612-3766
Tel: (312) 733-0551 Fax: (312) 733-2386 STATinfo@STATAnalysis.com
Accreditation Numbers: IEPA ELAP 100445; ORELAP IL300001; AIHA 101160; NVLAP LabCode 101202-

Date Reported: July 24, 2013
Date Printed: July 24, 2013

Client: Terracon Consultants, Inc.
Lab Order: 13060872
Project: A2137008, 650 West 83rd
Lab ID: 13060872-005

Client Sample ID: B-6 (1-3)
Collection Date: 6/25/2013 11:30:00 AM
Matrix: Soil

Analyses	Result	RL	Qualifier	Units	DF	Date Analyzed
Mercury	**SW7471A**			Prep Date: **6/28/2013**		Analyst: **LB**
Mercury	ND	0.023		mg/Kg-dry	1	6/28/2013
Metals by ICP/MS	**SW6020 (SW3050B)**			Prep Date: **7/1/2013**		Analyst: **JG**
Arsenic	16	1.1		mg/Kg-dry	10	7/1/2013
Barium	63	1.1		mg/Kg-dry	10	7/1/2013
Cadmium	0.59	0.55		mg/Kg-dry	10	7/1/2013
Chromium	22	1.1		mg/Kg-dry	10	7/1/2013
Lead	24	0.55		mg/Kg-dry	10	7/1/2013
Selenium	ND	1.1		mg/Kg-dry	10	7/1/2013
Silver	ND	1.1		mg/Kg-dry	10	7/1/2013
Semivolatile Organic Compounds by GC/MS	**SW8270C (SW3550B)**			Prep Date: **6/26/2013**		Analyst: **DM**
Acenaphthene	2	0.038		mg/Kg-dry	1	6/28/2013
Acenaphthylene	0.059	0.038		mg/Kg-dry	1	6/28/2013
Anthracene	7.2	0.38		mg/Kg-dry	10	7/1/2013
Benz(a)anthracene	7.4	0.38		mg/Kg-dry	10	7/1/2013
Benzo(a)pyrene	6.4	0.38		mg/Kg-dry	10	7/1/2013
Benzo(b)fluoranthene	4.4	0.038		mg/Kg-dry	1	6/28/2013
Benzo(g,h,i)perylene	2.5	0.038		mg/Kg-dry	1	6/28/2013
Benzo(k)fluoranthene	4.1	0.038		mg/Kg-dry	1	6/28/2013
Chrysene	6.6	0.38		mg/Kg-dry	10	7/1/2013
Dibenz(a,h)anthracene	1.3	0.038		mg/Kg-dry	1	6/28/2013
Fluoranthene	21	0.38		mg/Kg-dry	10	7/1/2013
Fluorene	3.4	0.038		mg/Kg-dry	1	6/28/2013
Indeno(1,2,3-cd)pyrene	2.4	0.038		mg/Kg-dry	1	6/28/2013
Naphthalene	0.75	0.038		mg/Kg-dry	1	6/28/2013
Phenanthrene	22	0.38		mg/Kg-dry	10	7/1/2013
Pyrene	16	0.38		mg/Kg-dry	10	7/1/2013
BTEX by GC/MS	**SW5035/8260B**			Prep Date: **6/26/2013**		Analyst: **PS**
Benzene	ND	0.0044		mg/Kg-dry	1	7/1/2013
Ethylbenzene	ND	0.0044		mg/Kg-dry	1	7/1/2013
Toluene	ND	0.0044		mg/Kg-dry	1	7/1/2013
Xylenes, Total	ND	0.013		mg/Kg-dry	1	7/1/2013
Percent Moisture	**D2974**			Prep Date: **6/27/2013**		Analyst: **SDA**
Percent Moisture	14.7	0.2	*	wt%	1	6/27/2013

Qualifiers:
ND - Not Detected at the Reporting Limit
J - Analyte detected below quantitation limits
B - Analyte detected in the associated Method Blank
HT - Sample received past holding time
* - Non-accredited parameter
RL - Reporting / Quantitation Limit for the analysis
S - Spike Recovery outside accepted recovery limits
R - RPD outside accepted recovery limits
E - Value above quantitation range
H - Holding time exceeded

STAT Analysis Corporation
2242 West Harrison St., Suite 200, Chicago, IL 60612-3766
Tel: (312) 733-0551 Fax: (312) 733-2386 STATinfo@STATAnalysis.com
Accreditation Numbers: IEPA ELAP 100445; ORELAP IL300001; AIHA 101160; NVLAP LabCode 101202-

Date Reported: July 24, 2013
Date Printed: July 24, 2013

Client: Terracon Consultants, Inc.
Lab Order: 13060872
Project: A2137008, 650 West 83rd
Lab ID: 13060872-006

Client Sample ID: B-6 (6-8)
Collection Date: 6/25/2013 11:45:00 AM
Matrix: Soil

Analyses	Result	RL	Qualifier	Units	DF	Date Analyzed
Mercury	**SW7471A**			Prep Date: **6/28/2013**		Analyst: **LB**
Mercury	ND	0.025		mg/Kg-dry	1	6/28/2013
Metals by ICP/MS	**SW6020 (SW3050B)**			Prep Date: **7/1/2013**		Analyst: **JG**
Arsenic	4.4	1.2		mg/Kg-dry	10	7/1/2013
Barium	120	1.2		mg/Kg-dry	10	7/1/2013
Cadmium	6.8	0.59		mg/Kg-dry	10	7/1/2013
Chromium	12	1.2		mg/Kg-dry	10	7/1/2013
Lead	19	0.59		mg/Kg-dry	10	7/1/2013
Selenium	1.2	1.2		mg/Kg-dry	10	7/1/2013
Silver	ND	1.2		mg/Kg-dry	10	7/1/2013
Semivolatile Organic Compounds by GC/MS	**SW8270C (SW3550B)**			Prep Date: **6/26/2013**		Analyst: **DM**
Acenaphthene	0.087	0.042		mg/Kg-dry	1	6/28/2013
Acenaphthylene	0.078	0.042		mg/Kg-dry	1	6/28/2013
Anthracene	0.32	0.042		mg/Kg-dry	1	6/28/2013
Benz(a)anthracene	0.95	0.042		mg/Kg-dry	1	6/28/2013
Benzo(a)pyrene	0.87	0.042		mg/Kg-dry	1	6/28/2013
Benzo(b)fluoranthene	1	0.042		mg/Kg-dry	1	6/28/2013
Benzo(g,h,i)perylene	0.53	0.042		mg/Kg-dry	1	6/28/2013
Benzo(k)fluoranthene	0.64	0.042		mg/Kg-dry	1	6/28/2013
Chrysene	1.1	0.042		mg/Kg-dry	1	6/28/2013
Dibenz(a,h)anthracene	0.27	0.042		mg/Kg-dry	1	6/28/2013
Fluoranthene	2.4	0.042		mg/Kg-dry	1	6/28/2013
Fluorene	0.14	0.042		mg/Kg-dry	1	6/28/2013
Indeno(1,2,3-cd)pyrene	0.47	0.042		mg/Kg-dry	1	6/28/2013
Naphthalene	0.078	0.042		mg/Kg-dry	1	6/28/2013
Phenanthrene	1.9	0.042		mg/Kg-dry	1	6/28/2013
Pyrene	1.9	0.042		mg/Kg-dry	1	6/28/2013
BTEX by GC/MS	**SW5035/8260B**			Prep Date: **6/26/2013**		Analyst: **PS**
Benzene	ND	0.0078		mg/Kg-dry	1	7/1/2013
Ethylbenzene	ND	0.0078		mg/Kg-dry	1	7/1/2013
Toluene	ND	0.0078		mg/Kg-dry	1	7/1/2013
Xylenes, Total	ND	0.023		mg/Kg-dry	1	7/1/2013
Percent Moisture	**D2974**			Prep Date: **6/27/2013**		Analyst: **SDA**
Percent Moisture	22.6	0.2	*	wt%	1	6/27/2013

Qualifiers:
ND - Not Detected at the Reporting Limit
J - Analyte detected below quantitation limits
B - Analyte detected in the associated Method Blank
HT - Sample received past holding time
* - Non-accredited parameter
RL - Reporting / Quantitation Limit for the analysis
S - Spike Recovery outside accepted recovery limits
R - RPD outside accepted recovery limits
E - Value above quantitation range
H - Holding time exceeded

STAT Analysis Corporation
2242 West Harrison St., Suite 200, Chicago, IL 60612-3766
Tel: (312) 733-0551 Fax: (312) 733-2386 STATinfo@STATAnalysis.com
Accreditation Numbers: IEPA ELAP 100445; ORELAP IL300001; AIHA 101160; NVLAP LabCode 101202-

Date Reported: July 24, 2013
Date Printed: July 24, 2013

Client: Terracon Consultants, Inc.
Lab Order: 13060872
Project: A2137008, 650 West 83rd
Lab ID: 13060872-007

Client Sample ID: B-5 (1-3)
Collection Date: 6/25/2013 10:20:00 AM
Matrix: Soil

Analyses	Result	RL	Qualifier	Units	DF	Date Analyzed
Mercury	**SW7471A**			Prep Date: **6/28/2013**		Analyst: **LB**
Mercury	0.65	0.02		mg/Kg-dry	1	6/28/2013
Metals by ICP/MS	**SW6020 (SW3050B)**			Prep Date: **7/1/2013**		Analyst: **JG**
Arsenic	29	1.1		mg/Kg-dry	10	7/1/2013
Barium	2500	1.1		mg/Kg-dry	10	7/1/2013
Cadmium	6.6	0.55		mg/Kg-dry	10	7/1/2013
Chromium	64	1.1		mg/Kg-dry	10	7/1/2013
Lead	3600	0.55		mg/Kg-dry	10	7/1/2013
Selenium	1.9	1.1		mg/Kg-dry	10	7/1/2013
Silver	2	1.1		mg/Kg-dry	10	7/1/2013
TCLP Metals by ICP/MS	**SW1311/6020 (SW3005A)**			Prep Date: **7/17/2013**		Analyst: **JG**
Lead	1.1	0.005		mg/L	5	7/17/2013
Semivolatile Organic Compounds by GC/MS	**SW8270C (SW3550B)**			Prep Date: **6/26/2013**		Analyst: **DM**
Acenaphthene	0.43	0.039		mg/Kg-dry	1	6/28/2013
Acenaphthylene	0.095	0.039		mg/Kg-dry	1	6/28/2013
Anthracene	1.6	0.039		mg/Kg-dry	1	6/28/2013
Benz(a)anthracene	3.7	0.039		mg/Kg-dry	1	6/28/2013
Benzo(a)pyrene	3.6	0.039		mg/Kg-dry	1	6/28/2013
Benzo(b)fluoranthene	3.5	0.039		mg/Kg-dry	1	6/28/2013
Benzo(g,h,i)perylene	2	0.039		mg/Kg-dry	1	6/28/2013
Benzo(k)fluoranthene	2.7	0.039		mg/Kg-dry	1	6/28/2013
Chrysene	3.9	0.039		mg/Kg-dry	1	6/28/2013
Dibenz(a,h)anthracene	1.1	0.039		mg/Kg-dry	1	6/28/2013
Fluoranthene	9.6	0.2		mg/Kg-dry	5	7/1/2013
Fluorene	0.53	0.039		mg/Kg-dry	1	6/28/2013
Indeno(1,2,3-cd)pyrene	1.8	0.039		mg/Kg-dry	1	6/28/2013
Naphthalene	0.38	0.039		mg/Kg-dry	1	6/28/2013
Phenanthrene	6.9	0.2		mg/Kg-dry	5	7/1/2013
Pyrene	7.9	0.2		mg/Kg-dry	5	7/1/2013
BTEX by GC/MS	**SW5035/8260B**			Prep Date: **6/26/2013**		Analyst: **PS**
Benzene	ND	0.0054		mg/Kg-dry	1	7/1/2013
Ethylbenzene	ND	0.0054		mg/Kg-dry	1	7/1/2013
Toluene	ND	0.0054		mg/Kg-dry	1	7/1/2013
Xylenes, Total	ND	0.016		mg/Kg-dry	1	7/1/2013
Hexavalent Chromium	**SW7196A (SW3060A)**			Prep Date: **7/23/2013**		Analyst: **YZ**
Chromium, Hexavalent	ND	0.48		mg/Kg-dry	1	7/23/2013

Qualifiers:
ND - Not Detected at the Reporting Limit
J - Analyte detected below quantitation limits
B - Analyte detected in the associated Method Blank
HT - Sample received past holding time
* - Non-accredited parameter
RL - Reporting / Quantitation Limit for the analysis
S - Spike Recovery outside accepted recovery limits
R - RPD outside accepted recovery limits
E - Value above quantitation range
H - Holding time exceeded

STAT Analysis Corporation
2242 West Harrison St., Suite 200, Chicago, IL 60612-3766
Tel: (312) 733-0551 Fax: (312) 733-2386 STATinfo@STATAnalysis.com
Accreditation Numbers: IEPA ELAP 100445; ORELAP IL300001; AIHA 101160; NVLAP LabCode 101202-

Date Reported: July 24, 2013
Date Printed: July 24, 2013

Client:	Terracon Consultants, Inc.	**Client Sample ID:**	B-5 (1-3)
Lab Order:	13060872	**Collection Date:**	6/25/2013 10:20:00 AM
Project:	A2137008, 650 West 83rd	**Matrix:**	Soil
Lab ID:	13060872-007		

Analyses	Result	RL	Qualifier	Units	DF	Date Analyzed
Percent Moisture	**D2974**			Prep Date: **6/27/2013**		Analyst: **SDA**
Percent Moisture	16.6	0.2	*	wt%	1	6/27/2013

Qualifiers:
ND - Not Detected at the Reporting Limit
J - Analyte detected below quantitation limits
B - Analyte detected in the associated Method Blank
HT - Sample received past holding time
* - Non-accredited parameter
RL - Reporting / Quantitation Limit for the analysis
S - Spike Recovery outside accepted recovery limits
R - RPD outside accepted recovery limits
E - Value above quantitation range
H - Holding time exceeded

STAT Analysis Corporation
2242 West Harrison St., Suite 200, Chicago, IL 60612-3766
Tel: (312) 733-0551 Fax: (312) 733-2386 STATinfo@STATAnalysis.com
Accreditation Numbers: IEPA ELAP 100445; ORELAP IL300001; AIHA 101160; NVLAP LabCode 101202-

Date Reported: July 24, 2013
Date Printed: July 24, 2013

Client: Terracon Consultants, Inc.
Lab Order: 13060872
Project: A2137008, 650 West 83rd
Lab ID: 13060872-008

Client Sample ID: B-5 (4-6)
Collection Date: 6/25/2013 10:30:00 AM
Matrix: Soil

Analyses	Result	RL	Qualifier	Units	DF	Date Analyzed
Mercury	**SW7471A**			Prep Date: **6/28/2013**		Analyst: **LB**
Mercury	0.078	0.018		mg/Kg-dry	1	6/28/2013
Metals by ICP/MS	**SW6020 (SW3050B)**			Prep Date: **7/1/2013**		Analyst: **JG**
Arsenic	7.1	1.1		mg/Kg-dry	10	7/1/2013
Barium	290	1.1		mg/Kg-dry	10	7/1/2013
Cadmium	ND	0.53		mg/Kg-dry	10	7/1/2013
Chromium	20	1.1		mg/Kg-dry	10	7/1/2013
Lead	370	0.53		mg/Kg-dry	10	7/1/2013
Selenium	ND	1.1		mg/Kg-dry	10	7/1/2013
Silver	ND	1.1		mg/Kg-dry	10	7/1/2013
Semivolatile Organic Compounds by GC/MS	**SW8270C (SW3550B)**			Prep Date: **6/26/2013**		Analyst: **DM**
Acenaphthene	ND	0.037		mg/Kg-dry	1	6/28/2013
Acenaphthylene	ND	0.037		mg/Kg-dry	1	6/28/2013
Anthracene	0.044	0.037		mg/Kg-dry	1	6/28/2013
Benz(a)anthracene	0.13	0.037		mg/Kg-dry	1	6/28/2013
Benzo(a)pyrene	0.17	0.037		mg/Kg-dry	1	6/28/2013
Benzo(b)fluoranthene	0.16	0.037		mg/Kg-dry	1	6/28/2013
Benzo(g,h,i)perylene	0.12	0.037		mg/Kg-dry	1	6/28/2013
Benzo(k)fluoranthene	0.12	0.037		mg/Kg-dry	1	6/28/2013
Chrysene	0.18	0.037		mg/Kg-dry	1	6/28/2013
Dibenz(a,h)anthracene	ND	0.037		mg/Kg-dry	1	6/28/2013
Fluoranthene	0.22	0.037		mg/Kg-dry	1	6/28/2013
Fluorene	ND	0.037		mg/Kg-dry	1	6/28/2013
Indeno(1,2,3-cd)pyrene	0.086	0.037		mg/Kg-dry	1	6/28/2013
Naphthalene	ND	0.037		mg/Kg-dry	1	6/28/2013
Phenanthrene	0.11	0.037		mg/Kg-dry	1	6/28/2013
Pyrene	0.24	0.037		mg/Kg-dry	1	6/28/2013
BTEX by GC/MS	**SW5035/8260B**			Prep Date: **6/26/2013**		Analyst: **PS**
Benzene	ND	0.0057		mg/Kg-dry	1	7/1/2013
Ethylbenzene	ND	0.0057		mg/Kg-dry	1	7/1/2013
Toluene	ND	0.0057		mg/Kg-dry	1	7/1/2013
Xylenes, Total	ND	0.017		mg/Kg-dry	1	7/1/2013
Percent Moisture	**D2974**			Prep Date: **6/27/2013**		Analyst: **SDA**
Percent Moisture	11.5	0.2	*	wt%	1	6/27/2013

Qualifiers:
ND - Not Detected at the Reporting Limit
J - Analyte detected below quantitation limits
B - Analyte detected in the associated Method Blank
HT - Sample received past holding time
* - Non-accredited parameter
RL - Reporting / Quantitation Limit for the analysis
S - Spike Recovery outside accepted recovery limits
R - RPD outside accepted recovery limits
E - Value above quantitation range
H - Holding time exceeded

STAT Analysis Corporation
2242 W. Harrison, Suite 200, Chicago, Illinois 60612 Phone: (312) 733-0551 Fax: (312) 733-2386
e-mail address: STATinfo@STATAnalysis.com AIHA, NVLAP and NELAP accredited

CHAIN OF CUSTODY RECORD

Nº: 850441 Page : ____ of ____

Company: Terracon
Project Number: 42137008 Client Tracking No.:
Project Name: 650 west 83rd
Project Location: Chicago, IL
Sampler(s): J. Sullivan
Report To: Richard O'Brien Phone:
Fax:
QC Level: 1 ____ 2 ____ 3 ____ 4 ____ e-mail: rmobrien@terracon.com

P.O. No.:
Quote No.:

Turn Around: STANDARD
Results Needed: / / am/pm

Client Sample Number/Description:	Date Taken	Time Taken	Matrix	Comp.	Grab	Preserv.	No. of Containers	VOC	SVOC	Pesticides + PCB	TAL Inorganics	Herbicides	BTEX	PNA	RCRA metals	Remarks	Lab No:
B-34 (1-3)	6-25-13	850	S		X		4	X	X	X	X	X	X				001
B-34 (4-6)		900	S		X		4										002
B-10 (1-3)		930	S		X		4						X	X	X		003
B-10 (4-6)		1000	S		X		4						X	X	X		004
B-6 (1-3)		1130	S		X		4						X	X	X		005
B-6 (6-8)		1145	S		X		4						X	X	X		006
B-5 (1-3)		1020	S		X		4						X	X	X		007
B-5 (4-6)		1030	S		X		4						X	X	X		008

Relinquished by: (Signature)	Date/Time: 6/25/13	1411
Received by: (Signature)	Date/Time: 6/25/13	14:11
Relinquished by: (Signature)	Date/Time: 6/25/13	15:15
Received by: (Signature)	Date/Time: 6/25/13	1515
Relinquished by: (Signature)	Date/Time:	
Received by: (Signature)	Date/Time:	

Comments:

Preservation Code: A = None B = HNO_3 C = NaOH
D = H_2SO_4 E = HCl F = 5035/EnCore G = Other

Laboratory Work Order No.: 13060672

Received on Ice: Yes [X] No [ ]
Temperature: 3.1 °C

STAT Analysis Corporation

Sample Receipt Checklist

Client Name TERRACON - CHICAGO | Date and Time Received: 6/25/2013 3:15:00 PM

Work Order Number 13060872 | Received by: TJW

Checklist completed by: _____ 6/25/13 (Signature / Date) | Reviewed by: EMP (Initials) 6/26/13 (Date)

Matrix: | Carrier name | Client Delivered

Shipping container/cooler in good condition?	Yes ☑	No ☐	Not Present ☐
Custody seals intact on shippping container/cooler?	Yes ☐	No ☐	Not Present ☑
Custody seals intact on sample bottles?	Yes ☐	No ☐	Not Present ☑
Chain of custody present?	Yes ☑	No ☐	
Chain of custody signed when relinquished and received?	Yes ☑	No ☐	
Chain of custody agrees with sample labels/containers?	Yes ☑	No ☐	
Samples in proper container/bottle?	Yes ☑	No ☐	
Sample containers intact?	Yes ☑	No ☐	
Sufficient sample volume for indicated test?	Yes ☑	No ☐	
All samples received within holding time?	Yes ☑	No ☐	
Container or Temp Blank temperature in compliance?	Yes ☑	No ☐	Temperature 3.4 °C
Water - VOA vials have zero headspace?	No VOA vials submitted ☐	Yes ☐	No ☐
Water - Samples pH checked?	Yes ☐	No ☐	Checked by:
Water - Samples properly preserved?	Yes ☐	No ☐	pH Adjusted?

Any No response must be detailed in the comments section below.

Comments:

Client / Person contacted: Date contacted: Contacted by:

Response:

Craig Chawla

From: O'Brien, Richard M [rmobrien@terracon.com]
Sent: Tuesday, July 16, 2013 7:57 AM
To: Craig Chawla
Subject: A2137008, 650 West 83rd

Hi Eamon,

Regarding the samples we submitted for A2137008, 650 West 83rd, please analyze the following on standard turnaround:

B-5(1-3) Hexavalent Chromium
B-5(1-3) TCLP Lead
B-11(1-3) TCLP Lead
B-16(4-6) TCLP Lead

B-1(4-6) foc
B-16(1-3) foc

Thanks,

Richard O'Brien, P.E.
Senior Project Engineer
Environmental Services

Terracon Consultants, Inc.
650 West Lake Street, Suite 420 I Chicago, IL 60661
P [312] 575-0014 I F [312] 575-0111 I C [312] 443-2958
rmobrien@terracon.com I terracon.com

From: Craig Chawla [mailto:cchawla@statanalysis.com]
Sent: Monday, July 15, 2013 7:33 PM
To: O'Brien, Richard M
Subject: A2137008, 650 West 83rd 13060872

Richard,

Attached is the invoice for project A2137008, 650 West 83rd received 6/25/2013.

In an effort to increase efficiency and conserve resources, STAT Analysis has adopted paperless reporting. The attached pdf files can be printed as the final copy. You will not receive a hardcopy in the mail. Please review the attached invoice and submit to accounts payable for payment.

Craig Chawla
STAT Analysis Corporation
2242 W. Harrison, Suite 200
Chicago, IL 60612
(312)733-0551

The information contained in this e-mail message and any attachments is confidential information intended only for the use of the individual or entities named above. If the reader of this message is not the intended recipient you are hereby notified that any dissemination, distribution, or copying of this

STAT Analysis Corporation
2242 West Harrison St., Suite 200, Chicago, IL 60612-3766
Tel: (312) 733-0551 Fax: (312) 733-2386 STATinfo@STATAnalysis.com
Accreditation Numbers: IEPA ELAP 100445; ORELAP IL300001;AIHA 101160; NVLAP LabCode 101202-

September 30, 2013

Terracon Consultants, Inc.
650 W. Lake Street
Suite 420
Chicago, IL 60661
Telephone: (312) 575-0014
Fax: (312) 575-0111

RE: A2137008, 650 West 83rd, Chicago, IL STAT Project No: 13061017

Dear Richard O'Brien:

STAT Analysis received 12 samples for the referenced project on 6/28/2013 3:34:00 PM. The analytical results are presented in the following report.

This report is revised to reflect additional analysis requested after the initial report was issued.

All analyses were performed in accordance with the requirements of 35 IAC Part 186 / NELAC standards. Analyses were performed in accordance with methods as referenced on the analytical report. Those analytical results expressed on a dry weight basis are also noted on the analytical report.

All analyses were performed within established holding time criteria, and all Quality Control criteria met EPA or laboratory specifications except when noted in the Case Narrative or Analytical Report. If required, an estimate of uncertainty for the analyses can be provided. A listing of accredited methods/parameters can also be provided.

Thank you for the opportunity to serve you and I look forward to working with you in the future. If you have any questions regarding the enclosed materials, please contact me at (312) 733-0551.

Sincerely,

Frank Capoccia
Project Manager

The information contained in this report and any attachments is confidential information intended only for the use of the individual or entities named above. The results of this report relate only to the samples tested. If you have received this report in error, please notify us immediately by phone. This report shall not be reproduced, except in its entirety, unless written approval has been obtained from the laboratory. This analytical report shall become property of the Customer upon payment in full. Otherwise, STAT will be under no obligation to support, defend or discuss the analytical report.

Client: Terracon Consultants, Inc.
Project: A2137008, 650 West 83rd, Chicago, IL
Lab Order: 13061017

Work Order Sample Summary

Lab Sample ID	Client Sample ID	Tag Number	Collection Date	Date Received
13061017-001A	B-12 (1-3)		6/28/2013 10:40:00 AM	6/28/2013
13061017-001B	B-12 (1-3)		6/28/2013 10:40:00 AM	6/28/2013
13061017-002A	B-12 (4-6)		6/28/2013 10:50:00 AM	6/28/2013
13061017-002B	B-12 (4-6)		6/28/2013 10:50:00 AM	6/28/2013
13061017-003A	B-29 (1-3)		6/28/2013 9:35:00 AM	6/28/2013
13061017-003B	B-29 (1-3)		6/28/2013 9:35:00 AM	6/28/2013
13061017-004A	B-29 (4-6)		6/28/2013 9:45:00 AM	6/28/2013
13061017-004B	B-29 (4-6)		6/28/2013 9:45:00 AM	6/28/2013
13061017-005A	B-28 (1-3)		6/28/2013 9:00:00 AM	6/28/2013
13061017-005B	B-28 (1-3)		6/28/2013 9:00:00 AM	6/28/2013
13061017-006A	B-28 (4-6)		6/28/2013 9:10:00 AM	6/28/2013
13061017-006B	B-28 (4-6)		6/28/2013 9:10:00 AM	6/28/2013
13061017-007A	B-30 (1-3)		6/28/2013 8:20:00 AM	6/28/2013
13061017-007B	B-30 (1-3)		6/28/2013 8:20:00 AM	6/28/2013
13061017-008A	B-30 (4-6)		6/28/2013 8:30:00 AM	6/28/2013
13061017-008B	B-30 (4-6)		6/28/2013 8:30:00 AM	6/28/2013
13061017-009A	B-22 (1-3)		6/28/2013 11:45:00 AM	6/28/2013
13061017-009B	B-22 (1-3)		6/28/2013 11:45:00 AM	6/28/2013
13061017-010A	B-22 (4-6)		6/28/2013 12:00:00 PM	6/28/2013
13061017-010B	B-22 (4-6)		6/28/2013 12:00:00 PM	6/28/2013
13061017-011A	B-13 (1-3)		6/28/2013 11:15:00 AM	6/28/2013
13061017-011B	B-13 (1-3)		6/28/2013 11:15:00 AM	6/28/2013
13061017-012A	B-13 (4-6)		6/28/2013 11:25:00 AM	6/28/2013
13061017-012B	B-13 (4-6)		6/28/2013 11:25:00 AM	6/28/2013

STAT Analysis Corporation
2242 West Harrison St., Suite 200, Chicago, IL 60612-3766
Tel: (312) 733-0551 Fax: (312) 733-2386 STATinfo@STATAnalysis.com
Accreditation Numbers: IEPA ELAP 100445; ORELAP IL300001; AIHA 101160; NVLAP LabCode 101202

Date Reported: September 30, 2013
Date Printed: September 30, 2013

Client: Terracon Consultants, Inc.
Lab Order: 13061017
Project: A2137008, 650 West 83rd, Chicago, IL
Lab ID: 13061017-001

Client Sample ID: B-12 (1-3)
Collection Date 6/28/2013 10:40:00 AM
Matrix: Soil

Analyses	Result	RL	Qualifier	Units	DF	Date Analyzed
Mercury	**SW7471A**			Prep Date: **7/3/2013**		Analyst: **LB**
Mercury	0.73	0.022		mg/Kg-dry	1	7/3/2013
Metals by ICP/MS	**SW6020 (SW3050B)**			Prep Date: **7/3/2013**		Analyst: **JG**
Arsenic	12	1.2		mg/Kg-dry	10	7/3/2013
Barium	86	1.2		mg/Kg-dry	10	7/3/2013
Cadmium	1.3	0.61		mg/Kg-dry	10	7/3/2013
Chromium	18	1.2		mg/Kg-dry	10	7/3/2013
Lead	140	0.61		mg/Kg-dry	10	7/5/2013
Selenium	ND	1.2		mg/Kg-dry	10	7/3/2013
Silver	ND	1.2		mg/Kg-dry	10	7/3/2013
Semivolatile Organic Compounds by GC/MS	**SW8270C (SW3550B)**			Prep Date: **6/29/2013**		Analyst: **DM**
Acenaphthene	ND	0.04		mg/Kg-dry	1	7/3/2013
Acenaphthylene	0.047	0.04		mg/Kg-dry	1	7/3/2013
Anthracene	0.055	0.04		mg/Kg-dry	1	7/3/2013
Benz(a)anthracene	0.25	0.04		mg/Kg-dry	1	7/3/2013
Benzo(a)pyrene	0.35	0.04		mg/Kg-dry	1	7/3/2013
Benzo(b)fluoranthene	0.4	0.04		mg/Kg-dry	1	7/3/2013
Benzo(g,h,i)perylene	0.3	0.04		mg/Kg-dry	1	7/3/2013
Benzo(k)fluoranthene	0.27	0.04		mg/Kg-dry	1	7/3/2013
Chrysene	0.35	0.04		mg/Kg-dry	1	7/3/2013
Dibenz(a,h)anthracene	0.15	0.04		mg/Kg-dry	1	7/3/2013
Fluoranthene	0.28	0.04		mg/Kg-dry	1	7/3/2013
Fluorene	ND	0.04		mg/Kg-dry	1	7/3/2013
Indeno(1,2,3-cd)pyrene	0.24	0.04		mg/Kg-dry	1	7/3/2013
Naphthalene	0.1	0.04		mg/Kg-dry	1	7/3/2013
Phenanthrene	0.17	0.04		mg/Kg-dry	1	7/3/2013
Pyrene	0.26	0.04		mg/Kg-dry	1	7/3/2013
BTEX by GC/MS	**SW5035/8260B**			Prep Date: **7/2/2013**		Analyst: **PS**
Benzene	ND	0.0056		mg/Kg-dry	1	7/3/2013
Ethylbenzene	ND	0.0056		mg/Kg-dry	1	7/3/2013
Toluene	ND	0.0056		mg/Kg-dry	1	7/3/2013
Xylenes, Total	ND	0.017		mg/Kg-dry	1	7/3/2013
pH (25 °C)	**SW9045C**			Prep Date: **7/2/2013**		Analyst: **RW**
pH	8.0			pH Units	1	7/2/2013
Percent Moisture	**D2974**			Prep Date: **7/2/2013**		Analyst: **SDA**
Percent Moisture	18.0	0.2	*	wt%	1	7/2/2013

Qualifiers:
ND - Not Detected at the Reporting Limit
J - Analyte detected below quantitation limits
B - Analyte detected in the associated Method Blank
HT - Sample received past holding time
* - Non-accredited parameter
RL - Reporting / Quantitation Limit for the analysis
S - Spike Recovery outside accepted recovery limits
R - RPD outside accepted recovery limits
E - Value above quantitation range
H - Holding time exceeded

STAT Analysis Corporation
2242 West Harrison St., Suite 200, Chicago, IL 60612-3766
Tel: (312) 733-0551 Fax: (312) 733-2386 STATinfo@STATAnalysis.com
Accreditation Numbers: IEPA ELAP 100445; ORELAP IL300001; AIHA 101160; NVLAP LabCode 101202

Date Reported: September 30, 2013
Date Printed: September 30, 2013

Client: Terracon Consultants, Inc.
Lab Order: 13061017
Project: A2137008, 650 West 83rd, Chicago, IL
Lab ID: 13061017-002

Client Sample ID: B-12 (4-6)
Collection Date 6/28/2013 10:50:00 AM
Matrix: Soil

Analyses	Result	RL	Qualifier	Units	DF	Date Analyzed
Mercury	**SW7471A**			Prep Date: **7/3/2013**		Analyst: **LB**
Mercury	0.63	0.023		mg/Kg-dry	1	7/3/2013
Metals by ICP/MS	**SW6020 (SW3050B)**			Prep Date: **7/3/2013**		Analyst: **JG**
Arsenic	7.7	1.3		mg/Kg-dry	10	7/3/2013
Barium	63	1.3		mg/Kg-dry	10	7/3/2013
Cadmium	ND	0.63		mg/Kg-dry	10	7/3/2013
Chromium	19	1.3		mg/Kg-dry	10	7/3/2013
Lead	42	0.63		mg/Kg-dry	10	7/5/2013
Selenium	ND	1.3		mg/Kg-dry	10	7/3/2013
Silver	ND	1.3		mg/Kg-dry	10	7/3/2013
Semivolatile Organic Compounds by GC/MS	**SW8270C (SW3550B)**			Prep Date: **6/29/2013**		Analyst: **DM**
Acenaphthene	ND	0.039		mg/Kg-dry	1	7/3/2013
Acenaphthylene	0.051	0.039		mg/Kg-dry	1	7/3/2013
Anthracene	0.1	0.039		mg/Kg-dry	1	7/3/2013
Benz(a)anthracene	0.28	0.039		mg/Kg-dry	1	7/3/2013
Benzo(a)pyrene	0.31	0.039		mg/Kg-dry	1	7/3/2013
Benzo(b)fluoranthene	0.25	0.039		mg/Kg-dry	1	7/3/2013
Benzo(g,h,i)perylene	0.15	0.039		mg/Kg-dry	1	7/3/2013
Benzo(k)fluoranthene	0.19	0.039		mg/Kg-dry	1	7/3/2013
Chrysene	0.29	0.039		mg/Kg-dry	1	7/3/2013
Dibenz(a,h)anthracene	0.078	0.039		mg/Kg-dry	1	7/3/2013
Fluoranthene	0.53	0.039		mg/Kg-dry	1	7/3/2013
Fluorene	ND	0.039		mg/Kg-dry	1	7/3/2013
Indeno(1,2,3-cd)pyrene	0.12	0.039		mg/Kg-dry	1	7/3/2013
Naphthalene	ND	0.039		mg/Kg-dry	1	7/3/2013
Phenanthrene	0.34	0.039		mg/Kg-dry	1	7/3/2013
Pyrene	0.52	0.039		mg/Kg-dry	1	7/3/2013
BTEX by GC/MS	**SW5035/8260B**			Prep Date: **7/2/2013**		Analyst: **ART**
Benzene	ND	0.0049		mg/Kg-dry	1	7/4/2013
Ethylbenzene	ND	0.0049		mg/Kg-dry	1	7/4/2013
Toluene	ND	0.0049		mg/Kg-dry	1	7/4/2013
Xylenes, Total	ND	0.015		mg/Kg-dry	1	7/4/2013
pH (25 °C)	**SW9045C**			Prep Date: **7/2/2013**		Analyst: **RW**
pH	7.9			pH Units	1	7/2/2013
Percent Moisture	**D2974**			Prep Date: **7/2/2013**		Analyst: **SDA**
Percent Moisture	16.9	0.2	*	wt%	1	7/2/2013

Qualifiers:
ND - Not Detected at the Reporting Limit
J - Analyte detected below quantitation limits
B - Analyte detected in the associated Method Blank
HT - Sample received past holding time
* - Non-accredited parameter
RL - Reporting / Quantitation Limit for the analysis
S - Spike Recovery outside accepted recovery limits
R - RPD outside accepted recovery limits
E - Value above quantitation range
H - Holding time exceeded

STAT Analysis Corporation
2242 West Harrison St., Suite 200, Chicago, IL 60612-3766
Tel: (312) 733-0551 Fax: (312) 733-2386 STATinfo@STATAnalysis.com
Accreditation Numbers: IEPA ELAP 100445; ORELAP IL300001; AIHA 101160; NVLAP LabCode 101202

Date Reported: September 30, 2013
Date Printed: September 30, 2013

Client: Terracon Consultants, Inc.
Lab Order: 13061017
Project: A2137008, 650 West 83rd, Chicago, IL
Lab ID: 13061017-003

Client Sample ID: B-29 (1-3)
Collection Date 6/28/2013 9:35:00 AM
Matrix: Soil

Analyses	Result	RL	Qualifier	Units	DF	Date Analyzed
Mercury	**SW7471A**			Prep Date: **7/3/2013**		Analyst: **LB**
Mercury	0.14	0.022		mg/Kg-dry	1	7/3/2013
Metals by ICP/MS	**SW6020 (SW3050B)**			Prep Date: **7/3/2013**		Analyst: **JG**
Arsenic	12	1.2		mg/Kg-dry	10	7/3/2013
Barium	230	1.2		mg/Kg-dry	10	7/3/2013
Cadmium	1	0.59		mg/Kg-dry	10	7/3/2013
Chromium	14	1.2		mg/Kg-dry	10	7/3/2013
Lead	430	0.59		mg/Kg-dry	10	7/5/2013
Selenium	ND	1.2		mg/Kg-dry	10	7/3/2013
Silver	ND	1.2		mg/Kg-dry	10	7/3/2013
Semivolatile Organic Compounds by GC/MS	**SW8270C (SW3550B)**			Prep Date: **6/29/2013**		Analyst: **DM**
Acenaphthene	0.18	0.039		mg/Kg-dry	1	7/3/2013
Acenaphthylene	0.11	0.039		mg/Kg-dry	1	7/3/2013
Anthracene	0.68	0.039		mg/Kg-dry	1	7/3/2013
Benz(a)anthracene	1.7	0.039		mg/Kg-dry	1	7/3/2013
Benzo(a)pyrene	1.7	0.039		mg/Kg-dry	1	7/3/2013
Benzo(b)fluoranthene	1.6	0.039		mg/Kg-dry	1	7/3/2013
Benzo(g,h,i)perylene	0.96	0.039		mg/Kg-dry	1	7/3/2013
Benzo(k)fluoranthene	1.2	0.039		mg/Kg-dry	1	7/3/2013
Chrysene	1.7	0.039		mg/Kg-dry	1	7/3/2013
Dibenz(a,h)anthracene	0.5	0.039		mg/Kg-dry	1	7/3/2013
Fluoranthene	3.2	0.039		mg/Kg-dry	1	7/3/2013
Fluorene	0.23	0.039		mg/Kg-dry	1	7/3/2013
Indeno(1,2,3-cd)pyrene	0.86	0.039		mg/Kg-dry	1	7/3/2013
Naphthalene	0.062	0.039		mg/Kg-dry	1	7/3/2013
Phenanthrene	2.1	0.039		mg/Kg-dry	1	7/3/2013
Pyrene	2.8	0.039		mg/Kg-dry	1	7/3/2013
BTEX by GC/MS	**SW5035/8260B**			Prep Date: **7/2/2013**		Analyst: **PS**
Benzene	0.0061	0.0049		mg/Kg-dry	1	7/3/2013
Ethylbenzene	ND	0.0049		mg/Kg-dry	1	7/3/2013
Toluene	ND	0.0049		mg/Kg-dry	1	7/3/2013
Xylenes, Total	ND	0.015		mg/Kg-dry	1	7/3/2013
pH (25 °C)	**SW9045C**			Prep Date: **7/2/2013**		Analyst: **RW**
pH	7.5			pH Units	1	7/2/2013
Percent Moisture	**D2974**			Prep Date: **7/2/2013**		Analyst: **SDA**
Percent Moisture	15.6	0.2	*	wt%	1	7/2/2013

Qualifiers:
ND - Not Detected at the Reporting Limit
J - Analyte detected below quantitation limits
B - Analyte detected in the associated Method Blank
HT - Sample received past holding time
* - Non-accredited parameter
RL - Reporting / Quantitation Limit for the analysis
S - Spike Recovery outside accepted recovery limits
R - RPD outside accepted recovery limits
E - Value above quantitation range
H - Holding time exceeded

STAT Analysis Corporation
2242 West Harrison St., Suite 200, Chicago, IL 60612-3766
Tel: (312) 733-0551 Fax: (312) 733-2386 STATinfo@STATAnalysis.com
Accreditation Numbers: IEPA ELAP 100445; ORELAP IL300001; AIHA 101160; NVLAP LabCode 101202

Date Reported: September 30, 2013
Date Printed: September 30, 2013

Client: Terracon Consultants, Inc.
Lab Order: 13061017
Project: A2137008, 650 West 83rd, Chicago, IL
Lab ID: 13061017-004

Client Sample ID: B-29 (4-6)
Collection Date 6/28/2013 9:45:00 AM
Matrix: Soil

Analyses	Result	RL	Qualifier	Units	DF	Date Analyzed
Mercury	**SW7471A**			Prep Date: **7/3/2013**		Analyst: **LB**
Mercury	ND	0.023		mg/Kg-dry	1	7/3/2013
Metals by ICP/MS	**SW6020 (SW3050B)**			Prep Date: **7/3/2013**		Analyst: **JG**
Arsenic	15	1.1		mg/Kg-dry	10	7/3/2013
Barium	170	1.1		mg/Kg-dry	10	7/3/2013
Cadmium	ND	0.54		mg/Kg-dry	10	7/3/2013
Chromium	6.9	1.1		mg/Kg-dry	10	7/3/2013
Lead	140	0.54		mg/Kg-dry	10	7/5/2013
Selenium	ND	1.1		mg/Kg-dry	10	7/3/2013
Silver	ND	1.1		mg/Kg-dry	10	7/3/2013
Semivolatile Organic Compounds by GC/MS	**SW8270C (SW3550B)**			Prep Date: **6/29/2013**		Analyst: **DM**
Acenaphthene	ND	0.039		mg/Kg-dry	1	7/3/2013
Acenaphthylene	ND	0.039		mg/Kg-dry	1	7/3/2013
Anthracene	ND	0.039		mg/Kg-dry	1	7/3/2013
Benz(a)anthracene	0.048	0.039		mg/Kg-dry	1	7/3/2013
Benzo(a)pyrene	ND	0.039		mg/Kg-dry	1	7/3/2013
Benzo(b)fluoranthene	ND	0.039		mg/Kg-dry	1	7/3/2013
Benzo(g,h,i)perylene	ND	0.039		mg/Kg-dry	1	7/3/2013
Benzo(k)fluoranthene	ND	0.039		mg/Kg-dry	1	7/3/2013
Chrysene	0.045	0.039		mg/Kg-dry	1	7/3/2013
Dibenz(a,h)anthracene	ND	0.039		mg/Kg-dry	1	7/3/2013
Fluoranthene	0.09	0.039		mg/Kg-dry	1	7/3/2013
Fluorene	ND	0.039		mg/Kg-dry	1	7/3/2013
Indeno(1,2,3-cd)pyrene	ND	0.039		mg/Kg-dry	1	7/3/2013
Naphthalene	ND	0.039		mg/Kg-dry	1	7/3/2013
Phenanthrene	0.092	0.039		mg/Kg-dry	1	7/3/2013
Pyrene	0.075	0.039		mg/Kg-dry	1	7/3/2013
BTEX by GC/MS	**SW5035/8260B**			Prep Date: **7/2/2013**		Analyst: **PS**
Benzene	ND	0.0067		mg/Kg-dry	1	7/3/2013
Ethylbenzene	ND	0.0067		mg/Kg-dry	1	7/3/2013
Toluene	ND	0.0067		mg/Kg-dry	1	7/3/2013
Xylenes, Total	ND	0.02		mg/Kg-dry	1	7/3/2013
Percent Moisture	**D2974**			Prep Date: **7/2/2013**		Analyst: **SDA**
Percent Moisture	17.3	0.2	*	wt%	1	7/2/2013

Qualifiers:
ND - Not Detected at the Reporting Limit
J - Analyte detected below quantitation limits
B - Analyte detected in the associated Method Blank
HT - Sample received past holding time
* - Non-accredited parameter
RL - Reporting / Quantitation Limit for the analysis
S - Spike Recovery outside accepted recovery limits
R - RPD outside accepted recovery limits
E - Value above quantitation range
H - Holding time exceeded

STAT Analysis Corporation
2242 West Harrison St., Suite 200, Chicago, IL 60612-3766
Tel: (312) 733-0551 Fax: (312) 733-2386 STATinfo@STATAnalysis.com
Accreditation Numbers: IEPA ELAP 100445; ORELAP IL300001; AIHA 101160; NVLAP LabCode 101202

Date Reported: September 30, 2013
Date Printed: September 30, 2013

Client: Terracon Consultants, Inc.
Lab Order: 13061017
Project: A2137008, 650 West 83rd, Chicago, IL
Lab ID: 13061017-005

Client Sample ID: B-28 (1-3)
Collection Date 6/28/2013 9:00:00 AM
Matrix: Soil

Analyses	Result	RL	Qualifier	Units	DF	Date Analyzed
Mercury	**SW7471A**			Prep Date: **7/3/2013**		Analyst: **LB**
Mercury	0.31	0.022		mg/Kg-dry	1	7/3/2013
Metals by ICP/MS	**SW6020 (SW3050B)**			Prep Date: **7/3/2013**		Analyst: **JG**
Arsenic	8.4	1.1		mg/Kg-dry	10	7/3/2013
Barium	360	1.1		mg/Kg-dry	10	7/3/2013
Cadmium	1.2	0.57		mg/Kg-dry	10	7/3/2013
Chromium	12	1.1		mg/Kg-dry	10	7/3/2013
Lead	510	0.57		mg/Kg-dry	10	7/3/2013
Selenium	ND	1.1		mg/Kg-dry	10	7/3/2013
Silver	ND	1.1		mg/Kg-dry	10	7/3/2013
Semivolatile Organic Compounds by GC/MS	**SW8270C (SW3550B)**			Prep Date: **6/29/2013**		Analyst: **DM**
Acenaphthene	ND	0.039		mg/Kg-dry	1	7/3/2013
Acenaphthylene	0.073	0.039		mg/Kg-dry	1	7/3/2013
Anthracene	0.21	0.039		mg/Kg-dry	1	7/3/2013
Benz(a)anthracene	0.68	0.039		mg/Kg-dry	1	7/3/2013
Benzo(a)pyrene	0.62	0.039		mg/Kg-dry	1	7/3/2013
Benzo(b)fluoranthene	0.67	0.039		mg/Kg-dry	1	7/3/2013
Benzo(g,h,i)perylene	0.41	0.039		mg/Kg-dry	1	7/3/2013
Benzo(k)fluoranthene	0.44	0.039		mg/Kg-dry	1	7/3/2013
Chrysene	0.67	0.039		mg/Kg-dry	1	7/3/2013
Dibenz(a,h)anthracene	0.2	0.039		mg/Kg-dry	1	7/3/2013
Fluoranthene	1.3	0.039		mg/Kg-dry	1	7/3/2013
Fluorene	0.041	0.039		mg/Kg-dry	1	7/3/2013
Indeno(1,2,3-cd)pyrene	0.34	0.039		mg/Kg-dry	1	7/3/2013
Naphthalene	ND	0.039		mg/Kg-dry	1	7/3/2013
Phenanthrene	0.61	0.039		mg/Kg-dry	1	7/3/2013
Pyrene	1.1	0.039		mg/Kg-dry	1	7/3/2013
BTEX by GC/MS	**SW5035/8260B**			Prep Date: **7/2/2013**		Analyst: **PS**
Benzene	ND	0.0051		mg/Kg-dry	1	7/3/2013
Ethylbenzene	ND	0.0051		mg/Kg-dry	1	7/3/2013
Toluene	ND	0.0051		mg/Kg-dry	1	7/3/2013
Xylenes, Total	ND	0.015		mg/Kg-dry	1	7/3/2013
Percent Moisture	**D2974**			Prep Date: **7/2/2013**		Analyst: **SDA**
Percent Moisture	15.9	0.2	*	wt%	1	7/2/2013

Qualifiers:
ND - Not Detected at the Reporting Limit
J - Analyte detected below quantitation limits
B - Analyte detected in the associated Method Blank
HT - Sample received past holding time
* - Non-accredited parameter
RL - Reporting / Quantitation Limit for the analysis
S - Spike Recovery outside accepted recovery limits
R - RPD outside accepted recovery limits
E - Value above quantitation range
H - Holding time exceeded

STAT Analysis Corporation
2242 West Harrison St., Suite 200, Chicago, IL 60612-3766
Tel: (312) 733-0551 Fax: (312) 733-2386 STATinfo@STATAnalysis.com
Accreditation Numbers: IEPA ELAP 100445; ORELAP IL300001; AIHA 101160; NVLAP LabCode 101202

Date Reported: September 30, 2013
Date Printed: September 30, 2013

Client: Terracon Consultants, Inc.
Lab Order: 13061017
Project: A2137008, 650 West 83rd, Chicago, IL
Lab ID: 13061017-006

Client Sample ID: B-28 (4-6)
Collection Date 6/28/2013 9:10:00 AM
Matrix: Soil

Analyses	Result	RL	Qualifier	Units	DF	Date Analyzed
Mercury	**SW7471A**			Prep Date: **7/3/2013**		Analyst: **LB**
Mercury	0.032	0.022		mg/Kg-dry	1	7/3/2013
Metals by ICP/MS	**SW6020 (SW3050B)**			Prep Date: **7/3/2013**		Analyst: **JG**
Arsenic	11	1.1		mg/Kg-dry	10	7/3/2013
Barium	24	1.1		mg/Kg-dry	10	7/3/2013
Cadmium	ND	0.55		mg/Kg-dry	10	7/3/2013
Chromium	7.6	1.1		mg/Kg-dry	10	7/3/2013
Lead	14	0.55		mg/Kg-dry	10	7/3/2013
Selenium	ND	1.1		mg/Kg-dry	10	7/3/2013
Silver	ND	1.1		mg/Kg-dry	10	7/3/2013
Semivolatile Organic Compounds by GC/MS	**SW8270C (SW3550B)**			Prep Date: **6/29/2013**		Analyst: **DM**
Acenaphthene	ND	0.038		mg/Kg-dry	1	7/3/2013
Acenaphthylene	ND	0.038		mg/Kg-dry	1	7/3/2013
Anthracene	ND	0.038		mg/Kg-dry	1	7/3/2013
Benz(a)anthracene	ND	0.038		mg/Kg-dry	1	7/3/2013
Benzo(a)pyrene	ND	0.038		mg/Kg-dry	1	7/3/2013
Benzo(b)fluoranthene	ND	0.038		mg/Kg-dry	1	7/3/2013
Benzo(g,h,i)perylene	ND	0.038		mg/Kg-dry	1	7/3/2013
Benzo(k)fluoranthene	ND	0.038		mg/Kg-dry	1	7/3/2013
Chrysene	ND	0.038		mg/Kg-dry	1	7/3/2013
Dibenz(a,h)anthracene	ND	0.038		mg/Kg-dry	1	7/3/2013
Fluoranthene	ND	0.038		mg/Kg-dry	1	7/3/2013
Fluorene	ND	0.038		mg/Kg-dry	1	7/3/2013
Indeno(1,2,3-cd)pyrene	ND	0.038		mg/Kg-dry	1	7/3/2013
Naphthalene	ND	0.038		mg/Kg-dry	1	7/3/2013
Phenanthrene	ND	0.038		mg/Kg-dry	1	7/3/2013
Pyrene	ND	0.038		mg/Kg-dry	1	7/3/2013
BTEX by GC/MS	**SW5035/8260B**			Prep Date: **7/2/2013**		Analyst: **PS**
Benzene	ND	0.0049		mg/Kg-dry	1	7/3/2013
Ethylbenzene	ND	0.0049		mg/Kg-dry	1	7/3/2013
Toluene	ND	0.0049		mg/Kg-dry	1	7/3/2013
Xylenes, Total	ND	0.015		mg/Kg-dry	1	7/3/2013
Percent Moisture	**D2974**			Prep Date: **7/2/2013**		Analyst: **SDA**
Percent Moisture	14.9	0.2	*	wt%	1	7/2/2013

Qualifiers:
ND - Not Detected at the Reporting Limit
J - Analyte detected below quantitation limits
B - Analyte detected in the associated Method Blank
HT - Sample received past holding time
* - Non-accredited parameter
RL - Reporting / Quantitation Limit for the analysis
S - Spike Recovery outside accepted recovery limits
R - RPD outside accepted recovery limits
E - Value above quantitation range
H - Holding time exceeded

STAT Analysis Corporation
2242 West Harrison St., Suite 200, Chicago, IL 60612-3766
Tel: (312) 733-0551 Fax: (312) 733-2386 STATinfo@STATAnalysis.com
Accreditation Numbers: IEPA ELAP 100445; ORELAP IL300001; AIHA 101160; NVLAP LabCode 101202

Date Reported: September 30, 2013
Date Printed: September 30, 2013

Client: Terracon Consultants, Inc.
Lab Order: 13061017
Project: A2137008, 650 West 83rd, Chicago, IL
Lab ID: 13061017-007

Client Sample ID: B-30 (1-3)
Collection Date 6/28/2013 8:20:00 AM
Matrix: Soil

Analyses	Result	RL	Qualifier	Units	DF	Date Analyzed
Mercury	**SW7471A**			Prep Date: **7/3/2013**		Analyst: **LB**
Mercury	ND	0.024		mg/Kg-dry	1	7/3/2013
Metals by ICP/MS	**SW6020 (SW3050B)**			Prep Date: **7/3/2013**		Analyst: **JG**
Arsenic	5.6	1.4		mg/Kg-dry	10	7/3/2013
Barium	12	1.4		mg/Kg-dry	10	7/3/2013
Cadmium	ND	0.68		mg/Kg-dry	10	7/3/2013
Chromium	8.4	1.4		mg/Kg-dry	10	7/3/2013
Lead	13	0.68		mg/Kg-dry	10	7/3/2013
Selenium	ND	1.4		mg/Kg-dry	10	7/3/2013
Silver	ND	1.4		mg/Kg-dry	10	7/3/2013
Semivolatile Organic Compounds by GC/MS	**SW8270C (SW3550B)**			Prep Date: **6/29/2013**		Analyst: **DM**
Acenaphthene	ND	0.042		mg/Kg-dry	1	7/3/2013
Acenaphthylene	ND	0.042		mg/Kg-dry	1	7/3/2013
Anthracene	ND	0.042		mg/Kg-dry	1	7/3/2013
Benz(a)anthracene	ND	0.042		mg/Kg-dry	1	7/3/2013
Benzo(a)pyrene	ND	0.042		mg/Kg-dry	1	7/3/2013
Benzo(b)fluoranthene	ND	0.042		mg/Kg-dry	1	7/3/2013
Benzo(g,h,i)perylene	ND	0.042		mg/Kg-dry	1	7/3/2013
Benzo(k)fluoranthene	ND	0.042		mg/Kg-dry	1	7/3/2013
Chrysene	ND	0.042		mg/Kg-dry	1	7/3/2013
Dibenz(a,h)anthracene	ND	0.042		mg/Kg-dry	1	7/3/2013
Fluoranthene	ND	0.042		mg/Kg-dry	1	7/3/2013
Fluorene	ND	0.042		mg/Kg-dry	1	7/3/2013
Indeno(1,2,3-cd)pyrene	ND	0.042		mg/Kg-dry	1	7/3/2013
Naphthalene	ND	0.042		mg/Kg-dry	1	7/3/2013
Phenanthrene	ND	0.042		mg/Kg-dry	1	7/3/2013
Pyrene	ND	0.042		mg/Kg-dry	1	7/3/2013
BTEX by GC/MS	**SW5035/8260B**			Prep Date: **7/2/2013**		Analyst: **PS**
Benzene	ND	0.0048		mg/Kg-dry	1	7/3/2013
Ethylbenzene	ND	0.0048		mg/Kg-dry	1	7/3/2013
Toluene	ND	0.0048		mg/Kg-dry	1	7/3/2013
Xylenes, Total	ND	0.014		mg/Kg-dry	1	7/3/2013
Percent Moisture	**D2974**			Prep Date: **7/2/2013**		Analyst: **SDA**
Percent Moisture	22.2	0.2	*	wt%	1	7/2/2013

Qualifiers:
ND - Not Detected at the Reporting Limit
J - Analyte detected below quantitation limits
B - Analyte detected in the associated Method Blank
HT - Sample received past holding time
* - Non-accredited parameter
RL - Reporting / Quantitation Limit for the analysis
S - Spike Recovery outside accepted recovery limits
R - RPD outside accepted recovery limits
E - Value above quantitation range
H - Holding time exceeded

STAT Analysis Corporation
2242 West Harrison St., Suite 200, Chicago, IL 60612-3766
Tel: (312) 733-0551 Fax: (312) 733-2386 STATinfo@STATAnalysis.com
Accreditation Numbers: IEPA ELAP 100445; ORELAP IL300001; AIHA 101160; NVLAP LabCode 101202

Date Reported: September 30, 2013
Date Printed: September 30, 2013

Client: Terracon Consultants, Inc.
Lab Order: 13061017
Project: A2137008, 650 West 83rd, Chicago, IL
Lab ID: 13061017-008

Client Sample ID: B-30 (4-6)
Collection Date 6/28/2013 8:30:00 AM
Matrix: Soil

Analyses	Result	RL	Qualifier	Units	DF	Date Analyzed
Mercury	**SW7471A**			Prep Date: **7/3/2013**		Analyst: **LB**
Mercury	0.32	0.02		mg/Kg-dry	1	7/3/2013
Metals by ICP/MS	**SW6020 (SW3050B)**			Prep Date: **7/3/2013**		Analyst: **JG**
Arsenic	15	1.2		mg/Kg-dry	10	7/3/2013
Barium	62	1.2		mg/Kg-dry	10	7/3/2013
Cadmium	ND	0.62		mg/Kg-dry	10	7/3/2013
Chromium	17	1.2		mg/Kg-dry	10	7/3/2013
Lead	67	0.62		mg/Kg-dry	10	7/3/2013
Selenium	ND	1.2		mg/Kg-dry	10	7/3/2013
Silver	ND	1.2		mg/Kg-dry	10	7/3/2013
Semivolatile Organic Compounds by GC/MS	**SW8270C (SW3550B)**			Prep Date: **6/29/2013**		Analyst: **DM**
Acenaphthene	0.053	0.042		mg/Kg-dry	1	7/3/2013
Acenaphthylene	ND	0.042		mg/Kg-dry	1	7/3/2013
Anthracene	0.18	0.042		mg/Kg-dry	1	7/3/2013
Benz(a)anthracene	0.36	0.042		mg/Kg-dry	1	7/3/2013
Benzo(a)pyrene	0.38	0.042		mg/Kg-dry	1	7/3/2013
Benzo(b)fluoranthene	0.34	0.042		mg/Kg-dry	1	7/3/2013
Benzo(g,h,i)perylene	0.2	0.042		mg/Kg-dry	1	7/3/2013
Benzo(k)fluoranthene	0.25	0.042		mg/Kg-dry	1	7/3/2013
Chrysene	0.35	0.042		mg/Kg-dry	1	7/3/2013
Dibenz(a,h)anthracene	0.11	0.042		mg/Kg-dry	1	7/3/2013
Fluoranthene	0.8	0.042		mg/Kg-dry	1	7/3/2013
Fluorene	0.057	0.042		mg/Kg-dry	1	7/3/2013
Indeno(1,2,3-cd)pyrene	0.15	0.042		mg/Kg-dry	1	7/3/2013
Naphthalene	ND	0.042		mg/Kg-dry	1	7/3/2013
Phenanthrene	0.52	0.042		mg/Kg-dry	1	7/3/2013
Pyrene	0.85	0.042		mg/Kg-dry	1	7/3/2013
BTEX by GC/MS	**SW5035/8260B**			Prep Date: **7/2/2013**		Analyst: **PS**
Benzene	ND	0.0054		mg/Kg-dry	1	7/3/2013
Ethylbenzene	ND	0.0054		mg/Kg-dry	1	7/3/2013
Toluene	ND	0.0054		mg/Kg-dry	1	7/3/2013
Xylenes, Total	ND	0.016		mg/Kg-dry	1	7/3/2013
Percent Moisture	**D2974**			Prep Date: **7/2/2013**		Analyst: **SDA**
Percent Moisture	22.5	0.2	*	wt%	1	7/2/2013

Qualifiers:
ND - Not Detected at the Reporting Limit
J - Analyte detected below quantitation limits
B - Analyte detected in the associated Method Blank
HT - Sample received past holding time
* - Non-accredited parameter
RL - Reporting / Quantitation Limit for the analysis
S - Spike Recovery outside accepted recovery limits
R - RPD outside accepted recovery limits
E - Value above quantitation range
H - Holding time exceeded

STAT Analysis Corporation
2242 West Harrison St., Suite 200, Chicago, IL 60612-3766
Tel: (312) 733-0551 Fax: (312) 733-2386 STATinfo@STATAnalysis.com
Accreditation Numbers: IEPA ELAP 100445; ORELAP IL300001; AIHA 101160; NVLAP LabCode 101202

Date Reported: September 30, 2013
Date Printed: September 30, 2013

Client: Terracon Consultants, Inc.
Lab Order: 13061017
Project: A2137008, 650 West 83rd, Chicago, IL
Lab ID: 13061017-011

Client Sample ID: B-13 (1-3)
Collection Date 6/28/2013 11:15:00 AM
Matrix: Soil

Analyses	Result	RL	Qualifier	Units	DF	Date Analyzed
Mercury	**SW7471A**			Prep Date: **7/5/2013**		Analyst: **LB**
Mercury	ND	0.021		mg/Kg-dry	1	7/5/2013
Metals by ICP/MS	**SW6020 (SW3050B)**			Prep Date: **7/9/2013**		Analyst: **JG**
Arsenic	19	2.3		mg/Kg-dry	20	7/10/2013
Barium	200	2.3		mg/Kg-dry	20	7/10/2013
Cadmium	1.6	1.2		mg/Kg-dry	20	7/10/2013
Chromium	13	2.3		mg/Kg-dry	20	7/10/2013
Lead	340	1.2		mg/Kg-dry	20	7/10/2013
Selenium	ND	2.3		mg/Kg-dry	20	7/10/2013
Silver	ND	2.3		mg/Kg-dry	20	7/10/2013
Semivolatile Organic Compounds by GC/MS	**SW8270C (SW3550B)**			Prep Date: **7/1/2013**		Analyst: **DM**
Acenaphthene	ND	0.04		mg/Kg-dry	1	7/4/2013
Acenaphthylene	0.047	0.04		mg/Kg-dry	1	7/4/2013
Anthracene	0.13	0.04		mg/Kg-dry	1	7/4/2013
Benz(a)anthracene	0.58	0.04		mg/Kg-dry	1	7/4/2013
Benzo(a)pyrene	0.6	0.04		mg/Kg-dry	1	7/4/2013
Benzo(b)fluoranthene	0.64	0.04		mg/Kg-dry	1	7/4/2013
Benzo(g,h,i)perylene	0.35	0.04		mg/Kg-dry	1	7/4/2013
Benzo(k)fluoranthene	0.46	0.04		mg/Kg-dry	1	7/4/2013
Chrysene	0.63	0.04		mg/Kg-dry	1	7/4/2013
Dibenz(a,h)anthracene	0.2	0.04		mg/Kg-dry	1	7/4/2013
Fluoranthene	1	0.04		mg/Kg-dry	1	7/4/2013
Fluorene	ND	0.04		mg/Kg-dry	1	7/4/2013
Indeno(1,2,3-cd)pyrene	0.3	0.04		mg/Kg-dry	1	7/4/2013
Naphthalene	ND	0.04		mg/Kg-dry	1	7/4/2013
Phenanthrene	0.54	0.04		mg/Kg-dry	1	7/4/2013
Pyrene	0.91	0.04		mg/Kg-dry	1	7/4/2013
BTEX by GC/MS	**SW5035/8260B**			Prep Date: **7/2/2013**		Analyst: **PS**
Benzene	ND	0.006		mg/Kg-dry	1	7/3/2013
Ethylbenzene	ND	0.006		mg/Kg-dry	1	7/3/2013
Toluene	ND	0.006		mg/Kg-dry	1	7/3/2013
Xylenes, Total	ND	0.018		mg/Kg-dry	1	7/3/2013
Percent Moisture	**D2974**			Prep Date: **7/3/2013**		Analyst: **SDA**
Percent Moisture	17.7	0.2	*	wt%	1	7/3/2013

Qualifiers:
ND - Not Detected at the Reporting Limit
J - Analyte detected below quantitation limits
B - Analyte detected in the associated Method Blank
HT - Sample received past holding time
* - Non-accredited parameter
RL - Reporting / Quantitation Limit for the analysis
S - Spike Recovery outside accepted recovery limits
R - RPD outside accepted recovery limits
E - Value above quantitation range
H - Holding time exceeded

STAT Analysis Corporation
2242 West Harrison St., Suite 200, Chicago, IL 60612-3766
Tel: (312) 733-0551 Fax: (312) 733-2386 STATinfo@STATAnalysis.com
Accreditation Numbers: IEPA ELAP 100445; ORELAP IL300001; AIHA 101160; NVLAP LabCode 101202

Date Reported: September 30, 2013
Date Printed: September 30, 2013

Client: Terracon Consultants, Inc.
Lab Order: 13061017
Project: A2137008, 650 West 83rd, Chicago, IL
Lab ID: 13061017-012

Client Sample ID: B-13 (4-6)
Collection Date: 6/28/2013 11:25:00 AM
Matrix: Soil

Analyses	Result	RL	Qualifier	Units	DF	Date Analyzed
Mercury	**SW7471A**			Prep Date: **7/5/2013**		Analyst: **LB**
Mercury	ND	0.024		mg/Kg-dry	1	7/5/2013
Metals by ICP/MS	**SW6020 (SW3050B)**			Prep Date: **7/9/2013**		Analyst: **JG**
Arsenic	7.4	2.6		mg/Kg-dry	20	7/10/2013
Barium	260	2.6		mg/Kg-dry	20	7/10/2013
Cadmium	ND	1.3		mg/Kg-dry	20	7/10/2013
Chromium	7.1	2.6		mg/Kg-dry	20	7/10/2013
Lead	1000	1.3		mg/Kg-dry	20	7/10/2013
Selenium	ND	2.6		mg/Kg-dry	20	7/10/2013
Silver	ND	2.6		mg/Kg-dry	20	7/10/2013
TCLP Metals by ICP/MS	**SW1311/6020 (SW3005A)**			Prep Date: **9/24/2013**		Analyst: **JG**
Lead	78	1		mg/L	1000	9/25/2013
Semivolatile Organic Compounds by GC/MS	**SW8270C (SW3550B)**			Prep Date: **7/1/2013**		Analyst: **DM**
Acenaphthene	ND	0.042		mg/Kg-dry	1	7/4/2013
Acenaphthylene	ND	0.042		mg/Kg-dry	1	7/4/2013
Anthracene	0.05	0.042		mg/Kg-dry	1	7/4/2013
Benz(a)anthracene	0.11	0.042		mg/Kg-dry	1	7/4/2013
Benzo(a)pyrene	0.13	0.042		mg/Kg-dry	1	7/4/2013
Benzo(b)fluoranthene	0.13	0.042		mg/Kg-dry	1	7/4/2013
Benzo(g,h,i)perylene	0.097	0.042		mg/Kg-dry	1	7/4/2013
Benzo(k)fluoranthene	0.085	0.042		mg/Kg-dry	1	7/4/2013
Chrysene	0.14	0.042		mg/Kg-dry	1	7/4/2013
Dibenz(a,h)anthracene	ND	0.042		mg/Kg-dry	1	7/4/2013
Fluoranthene	0.17	0.042		mg/Kg-dry	1	7/4/2013
Fluorene	ND	0.042		mg/Kg-dry	1	7/4/2013
Indeno(1,2,3-cd)pyrene	0.087	0.042		mg/Kg-dry	1	7/4/2013
Naphthalene	ND	0.042		mg/Kg-dry	1	7/4/2013
Phenanthrene	0.13	0.042		mg/Kg-dry	1	7/4/2013
Pyrene	0.2	0.042		mg/Kg-dry	1	7/4/2013
BTEX by GC/MS	**SW5035/8260B**			Prep Date: **7/2/2013**		Analyst: **PS**
Benzene	ND	0.0075		mg/Kg-dry	1	7/3/2013
Ethylbenzene	ND	0.0075		mg/Kg-dry	1	7/3/2013
Toluene	ND	0.0075		mg/Kg-dry	1	7/3/2013
Xylenes, Total	ND	0.022		mg/Kg-dry	1	7/3/2013
Percent Moisture	**D2974**			Prep Date: **7/3/2013**		Analyst: **SDA**
Percent Moisture	22.4	0.2	*	wt%	1	7/3/2013

Qualifiers:
ND - Not Detected at the Reporting Limit
J - Analyte detected below quantitation limits
B - Analyte detected in the associated Method Blank
HT - Sample received past holding time
* - Non-accredited parameter
RL - Reporting / Quantitation Limit for the analysis
S - Spike Recovery outside accepted recovery limits
R - RPD outside accepted recovery limits
E - Value above quantitation range
H - Holding time exceeded

STAT Analysis Corporation
2242 W. Harrison, Suite 200, Chicago, Illinois 60612 Phone: (312) 733-0551 Fax: (312) 733-2386
e-mail address: STATinfo@STATAnalysis.com AIHA, NVLAP and NELAP accredited

CHAIN OF CUSTODY RECORD

N°: 850552 Page: ____ of ____

Company: TERRACON
Project Number: AZ137008 Client Tracking No.:
Project Name: 650 west 83rd
Project Location: Chicago IL
Sampler(s): J. Sullivan
Report To: Richard O'Brien Phone:
Fax:
QC Level: 1 ____ 2 ____ 3 ____ 4 ____ e-mail: rmobrien@terracon.com

P.O. No.:
Quote No.:

Turn Around: Standard
Results Needed: / / am/pm

Client Sample Number/Description:	Date Taken	Time Taken	Matrix	Comp.	Grab	Preserv.	No. of Containers	Btex	PNA	RCRA metals	Remarks	Lab No.
B-12 (1-3)	6-25-13	1040	S		X		4	X	X	X		001
B-12 (4-6)		1050	S		X		4	X	X	X		002
B-29 (1-3)		935						X	X	X		003
B-29 (4-6)		945						X	X	X		004
B-28 (1-3)		900						X	X	X		005
B-28 (4-6)		910						X	X	X		006
B-30 (1-3)		820						X	X	X		007
B-30 (4-6)		830						X	X	X		008
B-22 (1-3)		1145						X	X	X	HOLD	009
B-22 (4-6)		1200						X	X	X	HOLD	010

Relinquished by: (Signature) Date/Time: 6/25/13 1220
Received by: (Signature) Date/Time: 6/28/13 1220
Relinquished by: (Signature) Date/Time: 6/28/13 3:34
Received by: (Signature) Date/Time: 6/28/13 1534
Relinquished by: (Signature) Date/Time:
Received by: (Signature) Date/Time:

Comments:

Preservation Code: A = None B = HNO_3 C = NaOH
D = H_2SO_4 E = HCl F = 5035/EnCore G = Other

Laboratory Work Order No.: 1306107

Received on Ice: Yes [X] No [ ]
Temperature: 3.6 °C

STAT Analysis Corporation

Sample Receipt Checklist

Client Name TERRACON - CHICAGO | Date and Time Received: 6/28/2013 3:34:00 PM

Work Order Number 13061017 | Received by: TJW

Checklist completed by: _____ 6/29/13 (Signature / Date) | Reviewed by: FC 7/1/13 (Initials / Date)

Matrix:	Carrier name	Client Delivered			
Shipping container/cooler in good condition?		Yes ☑	No ☐	Not Present ☐	
Custody seals intact on shippping container/cooler?		Yes ☐	No ☐	Not Present ☑	
Custody seals intact on sample bottles?		Yes ☐	No ☐	Not Present ☑	
Chain of custody present?		Yes ☑	No ☐		
Chain of custody signed when relinquished and received?		Yes ☑	No ☐		
Chain of custody agrees with sample labels/containers?		Yes ☐	No ☑		
Samples in proper container/bottle?		Yes ☑	No ☐		
Sample containers intact?		Yes ☑	No ☐		
Sufficient sample volume for indicated test?		Yes ☑	No ☐		
All samples received within holding time?		Yes ☑	No ☐		
Container or Temp Blank temperature in compliance?		Yes ☑	No ☐	Temperature	3.6 °C
Water - VOA vials have zero headspace?	No VOA vials submitted ☐		Yes ☐	No ☐	
Water - Samples pH checked?		Yes ☐	No ☐	Checked by:	
Water - Samples properly preserved?		Yes ☐	No ☐	pH Adjusted?	

Any No response must be detailed in the comments section below.

Comments: Samples B-13(1-3) (1306l017-011) & B-13(4-6) (1306l017-012) submitted but not listed on COC.

Client / Person contacted: Richard O'Brien Date contacted: 7/1/13 Contacted by: Frank C.

Response: Submit B-13(1-3) & B-13(4-6) for Btex, PNA, and RCRA metals.

Craig Chawla

From: O'Brien, Richard M [rmobrien@terracon.com]
Sent: Monday, July 01, 2013 9:19 AM
To: Craig Chawla
Subject: 650 W. 83rd Street

Hi Craig,

I have a few changes regarding the samples submitted last Tuesday (6/25) – Friday (6/28) for 650 W. 83rd Street by Jason Juliano for us. Please run the following on standard turnaround:

B18(1-3) – Change from BTEX to VOCs
B33(4-6) – Change from BTEX to VOCs
B15(subsurface) – Change from BTEX to VOCs, add pH

B16(1-3) – Change to IEPA Target Compound List
B16(subsurface) – Change to IEPA Target Compound List

B-8(1-3) – Add pH
B29(1-3) – Add pH
B29(subsurface) – Add pH
B12(1-3) – Add pH
B12(subsurface) – Add pH
B31(1-3) – Add pH
B31(subsurface) – Add pH

Note I do not have the "subsurface" intervals listed in samples listed at the moment. They are most likely (4-6) or (6-8). Let me know if you have any questions.

Thanks,

Richard O'Brien, P.E.
Senior Project Engineer
Environmental Services

Terracon Consultants, Inc.
650 West Lake Street, Suite 420 I Chicago, IL 60661
P [312] 575-0014 I F [312] 575-0111 I C [312] 443-2958
rmobrien@terracon.com I terracon.com

Terracon provides geotechnical, environmental, construction materials, and facilities consulting engineering services delivered with responsiveness, resourcefulness, and reliability.

Private and confidential as detailed here (www.terracon.com/disclaimer). If you cannot access hyperlink, please e-mail sender.

Frank Capoccia

From: O'Brien, Richard M [rmobrien@terracon.com]
Sent: Monday, September 23, 2013 4:22 PM
To: Frank Capoccia
Cc: Toth, Matthew J
Subject: RE: TOR 00005 - Additional TCLP Lab Analyssis Request

Hi Frank,

For the 650 W 83rd Job with samples submitted last week of June 2013, we would like to do TCLP lead analysis on the following samples on standard turnaround:

B3(4-6)

B11(4-6)

B13(4-6)

B17(1-3)

Thanks,

Richard O'Brien, P.E.
Senior Project Engineer
Environmental Services

Terracon Consultants, Inc.
650 West Lake Street, Suite 420 I Chicago, IL 60661
P [312] 575-0014 I F [312] 575-0111 I C [312] 443-2958
rmobrien@terracon.com I terracon.com

Terracon provides environmental, facilities, geotechnical, and materials consulting engineering services delivered with responsiveness, resourcefulness, and reliability.

Private and confidential as detailed here (www.terracon.com/disclaimer). If you cannot access hyperlink, please e-mail sender.

STAT Analysis Corporation
2242 West Harrison St., Suite 200, Chicago, IL 60612-3766
Tel: (312) 733-0551 Fax: (312) 733-2386 STATinfo@STATAnalysis.com
Accreditation Numbers: IEPA ELAP 100445; ORELAP IL300001;AIHA 101160; NVLAP LabCode 101202-

September 30, 2013

Terracon Consultants, Inc.
135 Ambassador Drive
Naperville, IL 60540
Telephone: (630) 717-4263
Fax: (630) 357-9489

RE: A2137008, 650 West 83rd, Chicago, IL STAT Project No: 13060993

Dear Richard O'Brien:

STAT Analysis received 30 samples for the referenced project on 6/27/2013 4:18:00 PM. The analytical results are presented in the following report.

This report is revised to reflect additional analysis requested after the initial report was issued.

All analyses were performed in accordance with the requirements of 35 IAC Part 186 / NELAC standards. Analyses were performed in accordance with methods as referenced on the analytical report. Those analytical results expressed on a dry weight basis are also noted on the analytical report.

All analyses were performed within established holding time criteria, and all Quality Control criteria met EPA or laboratory specifications except when noted in the Case Narrative or Analytical Report. If required, an estimate of uncertainty for the analyses can be provided. A listing of accredited methods/parameters can also be provided.

Thank you for the opportunity to serve you and I look forward to working with you in the future. If you have any questions regarding the enclosed materials, please contact me at (312) 733-0551.

Sincerely,

Frank Capoccia
Project Manager

The information contained in this report and any attachments is confidential information intended only for the use of the individual or entities named above. The results of this report relate only to the samples tested. If you have received this report in error, please notify us immediately by phone. This report shall not be reproduced, except in its entirety, unless written approval has been obtained from the laboratory. This analytical report shall become property of the Customer upon payment in full. Otherwise, STAT will be under no obligation to support, defend or discuss the analytical report.

Client: Terracon Consultants, Inc.
Project: A2137008, 650 West 83rd, Chicago, IL
Lab Order: 13060993

Work Order Sample Summary

Lab Sample ID	Client Sample ID	Tag Number	Collection Date	Date Received
13060993-001A	B-4 (1-3)		6/27/2013 2:20:00 PM	6/27/2013
13060993-001B	B-4 (1-3)		6/27/2013 2:20:00 PM	6/27/2013
13060993-002A	B-4 (4-6)		6/27/2013 2:30:00 PM	6/27/2013
13060993-002B	B-4 (4-6)		6/27/2013 2:30:00 PM	6/27/2013
13060993-003A	B-37 (1-3)		6/27/2013 2:00:00 PM	6/27/2013
13060993-003B	B-37 (1-3)		6/27/2013 2:00:00 PM	6/27/2013
13060993-004A	B-37 (6-8)		6/27/2013 2:10:00 PM	6/27/2013
13060993-004B	B-37 (6-8)		6/27/2013 2:10:00 PM	6/27/2013
13060993-005A	B-1 (1-3)		6/27/2013 1:35:00 PM	6/27/2013
13060993-005B	B-1 (1-3)		6/27/2013 1:35:00 PM	6/27/2013
13060993-006A	B-1 (4-6)		6/27/2013 1:40:00 PM	6/27/2013
13060993-006B	B-1 (4-6)		6/27/2013 1:40:00 PM	6/27/2013
13060993-007A	B-24 (1-3)		6/27/2013 11:00:00 AM	6/27/2013
13060993-007B	B-24 (1-3)		6/27/2013 11:00:00 AM	6/27/2013
13060993-008A	B-24 (6-8)		6/27/2013 11:10:00 AM	6/27/2013
13060993-008B	B-24 (6-8)		6/27/2013 11:10:00 AM	6/27/2013
13060993-009A	B-2 (1-3)		6/27/2013 1:20:00 PM	6/27/2013
13060993-009B	B-2 (1-3)		6/27/2013 1:20:00 PM	6/27/2013
13060993-010A	B-2 (6-8)		6/27/2013 1:25:00 PM	6/27/2013
13060993-010B	B-2 (6-8)		6/27/2013 1:25:00 PM	6/27/2013
13060993-011A	B-23 (1-3)		6/27/2013 11:20:00 AM	6/27/2013
13060993-011B	B-23 (1-3)		6/27/2013 11:20:00 AM	6/27/2013
13060993-012A	B-23 (4-6)		6/27/2013 11:35:00 AM	6/27/2013
13060993-012B	B-23 (4-6)		6/27/2013 11:35:00 AM	6/27/2013
13060993-013A	B-3 (1-3)		6/27/2013 1:00:00 PM	6/27/2013
13060993-013B	B-3 (1-3)		6/27/2013 1:00:00 PM	6/27/2013
13060993-014A	B-3 (4-6)		6/27/2013 1:15:00 PM	6/27/2013
13060993-014B	B-3 (4-6)		6/27/2013 1:15:00 PM	6/27/2013
13060993-015A	B-14 (1-3)		6/27/2013 10:40:00 AM	6/27/2013
13060993-015B	B-14 (1-3)		6/27/2013 10:40:00 AM	6/27/2013
13060993-016A	B-14 (6-8)		6/27/2013 10:45:00 AM	6/27/2013
13060993-016B	B-14 (6-8)		6/27/2013 10:45:00 AM	6/27/2013
13060993-017A	B-15 (1-3)		6/27/2013 10:20:00 AM	6/27/2013
13060993-017B	B-15 (1-3)		6/27/2013 10:20:00 AM	6/27/2013
13060993-018A	B-15 (4-6)		6/27/2013 10:30:00 AM	6/27/2013
13060993-018B	B-15 (4-6)		6/27/2013 10:30:00 AM	6/27/2013
13060993-019A	B-31 (1-3)		6/27/2013 9:45:00 AM	6/27/2013
13060993-019B	B-31 (1-3)		6/27/2013 9:45:00 AM	6/27/2013

Client:	Terracon Consultants, Inc.	
Project:	A2137008, 650 West 83rd, Chicago, IL	**Work Order Sample Summary**
Lab Order:	13060993	

Lab Sample ID	Client Sample ID	Tag Number	Collection Date	Date Received
13060993-020A	B-31 (6-8)		6/27/2013 10:00:00 AM	6/27/2013
13060993-020B	B-31 (6-8)		6/27/2013 10:00:00 AM	6/27/2013
13060993-021A	B-16 (1-3)		6/27/2013 9:15:00 AM	6/27/2013
13060993-021B	B-16 (1-3)		6/27/2013 9:15:00 AM	6/27/2013
13060993-022A	B-16 (4-6)		6/27/2013 9:20:00 AM	6/27/2013
13060993-022B	B-16 (4-6)		6/27/2013 9:20:00 AM	6/27/2013
13060993-023A	B-7 (1-3)		6/27/2013 9:00:00 AM	6/27/2013
13060993-023B	B-7 (1-3)		6/27/2013 9:00:00 AM	6/27/2013
13060993-024A	B-7 (4-6)		6/27/2013 9:10:00 AM	6/27/2013
13060993-024B	B-7 (4-6)		6/27/2013 9:10:00 AM	6/27/2013
13060993-025A	B-20 (1-3)		6/27/2013 8:35:00 AM	6/27/2013
13060993-025B	B-20 (1-3)		6/27/2013 8:35:00 AM	6/27/2013
13060993-026A	B-20 (4-6)		6/27/2013 8:25:00 AM	6/27/2013
13060993-026B	B-20 (4-6)		6/27/2013 8:25:00 AM	6/27/2013
13060993-027A	B-21 (1-3)		6/27/2013 8:00:00 AM	6/27/2013
13060993-027B	B-21 (1-3)		6/27/2013 8:00:00 AM	6/27/2013
13060993-028A	B-21 (4-6)		6/27/2013 8:10:00 AM	6/27/2013
13060993-028B	B-21 (4-6)		6/27/2013 8:10:00 AM	6/27/2013
13060993-029A	B-11 (1-3)		6/27/2013 7:40:00 AM	6/27/2013
13060993-029B	B-11 (1-3)		6/27/2013 7:40:00 AM	6/27/2013
13060993-030A	B-11 (4-6)		6/27/2013 7:45:00 AM	6/27/2013
13060993-030B	B-11 (4-6)		6/27/2013 7:45:00 AM	6/27/2013

STAT Analysis Corporation

Date: *September 30, 2013*

CLIENT:	Terracon Consultants, Inc.
Project:	A2137008, 650 West 83rd, Chicago, IL
Lab Order:	13060993

CASE NARRATIVE

The VOC soil Laboratory Control Sample/Laboratory Control Sample Duplicate (LCS/LCSD) analyzed 07/01/2013 had recovery of Bromomethane outside of control limits (43%/46% (LCS/LCSD) recovery, QC limits 70-130%).

The VOC soil Laboratory Control Sample/Laboratory Control Sample Duplicate (LCS/LCSD) analyzed 07/02/2013 had recovery of the following compounds outside of control limits:
Chloromethane: (69% (LCS) recovery, QC limits 70-130%)
Bromomethane: (28%/32% (LCS/LCSD) recovery, QC limits 70-130%)

STAT Analysis Corporation
2242 West Harrison St., Suite 200, Chicago, IL 60612-3766
Tel: (312) 733-0551 Fax: (312) 733-2386 STATinfo@STATAnalysis.com
Accreditation Numbers: IEPA ELAP 100445; ORELAP IL300001; AIHA 101160; NVLAP LabCode 101202

Date Reported: September 30, 2013
Date Printed: September 30, 2013

Client: Terracon Consultants, Inc.
Lab Order: 13060993
Project: A2137008, 650 West 83rd, Chicago, IL
Lab ID: 13060993-001

Client Sample ID: B-4 (1-3)
Collection Date 6/27/2013 2:20:00 PM
Matrix: Soil

Analyses	Result	RL	Qualifier	Units	DF	Date Analyzed
Mercury	**SW7471A**			Prep Date: **7/5/2013**		Analyst: **LB**
Mercury	0.073	0.024		mg/Kg-dry	1	7/5/2013
Metals by ICP/MS	**SW6020 (SW3050B)**			Prep Date: **7/2/2013**		Analyst: **JG**
Arsenic	23	1.2		mg/Kg-dry	10	7/2/2013
Barium	110	1.2		mg/Kg-dry	10	7/2/2013
Cadmium	0.79	0.62		mg/Kg-dry	10	7/2/2013
Chromium	13	1.2		mg/Kg-dry	10	7/2/2013
Lead	290	0.62		mg/Kg-dry	10	7/2/2013
Selenium	1.3	1.2		mg/Kg-dry	10	7/2/2013
Silver	ND	1.2		mg/Kg-dry	10	7/2/2013
Semivolatile Organic Compounds by GC/MS	**SW8270C (SW3550B)**			Prep Date: **7/1/2013**		Analyst: **DM**
Acenaphthene	ND	0.044		mg/Kg-dry	1	7/2/2013
Acenaphthylene	ND	0.044		mg/Kg-dry	1	7/2/2013
Anthracene	ND	0.044		mg/Kg-dry	1	7/2/2013
Benz(a)anthracene	ND	0.044		mg/Kg-dry	1	7/2/2013
Benzo(a)pyrene	ND	0.044		mg/Kg-dry	1	7/2/2013
Benzo(b)fluoranthene	ND	0.044		mg/Kg-dry	1	7/2/2013
Benzo(g,h,i)perylene	ND	0.044		mg/Kg-dry	1	7/2/2013
Benzo(k)fluoranthene	ND	0.044		mg/Kg-dry	1	7/2/2013
Chrysene	ND	0.044		mg/Kg-dry	1	7/2/2013
Dibenz(a,h)anthracene	ND	0.044		mg/Kg-dry	1	7/2/2013
Fluoranthene	ND	0.044		mg/Kg-dry	1	7/2/2013
Fluorene	ND	0.044		mg/Kg-dry	1	7/2/2013
Indeno(1,2,3-cd)pyrene	ND	0.044		mg/Kg-dry	1	7/2/2013
Naphthalene	ND	0.044		mg/Kg-dry	1	7/2/2013
Phenanthrene	ND	0.044		mg/Kg-dry	1	7/2/2013
Pyrene	ND	0.044		mg/Kg-dry	1	7/2/2013
BTEX by GC/MS	**SW5035/8260B**			Prep Date: **7/1/2013**		Analyst: **PS**
Benzene	ND	0.0063		mg/Kg-dry	1	7/2/2013
Ethylbenzene	ND	0.0063		mg/Kg-dry	1	7/2/2013
Toluene	ND	0.0063		mg/Kg-dry	1	7/2/2013
Xylenes, Total	ND	0.019		mg/Kg-dry	1	7/2/2013
Percent Moisture	**D2974**			Prep Date: **7/2/2013**		Analyst: **SDA**
Percent Moisture	25.0	0.2	*	wt%	1	7/2/2013

Qualifiers:
ND - Not Detected at the Reporting Limit
J - Analyte detected below quantitation limits
B - Analyte detected in the associated Method Blank
HT - Sample received past holding time
* - Non-accredited parameter
RL - Reporting / Quantitation Limit for the analysis
S - Spike Recovery outside accepted recovery limits
R - RPD outside accepted recovery limits
E - Value above quantitation range
H - Holding time exceeded

STAT Analysis Corporation
2242 West Harrison St., Suite 200, Chicago, IL 60612-3766
Tel: (312) 733-0551 Fax: (312) 733-2386 STATinfo@STATAnalysis.com
Accreditation Numbers: IEPA ELAP 100445; ORELAP IL300001; AIHA 101160; NVLAP LabCode 101202

Date Reported: September 30, 2013
Date Printed: September 30, 2013

Client: Terracon Consultants, Inc.
Lab Order: 13060993
Project: A2137008, 650 West 83rd, Chicago, IL
Lab ID: 13060993-002

Client Sample ID: B-4 (4-6)
Collection Date 6/27/2013 2:30:00 PM
Matrix: Soil

Analyses	Result	RL	Qualifier	Units	DF	Date Analyzed
Mercury	**SW7471A**			Prep Date: **7/5/2013**		Analyst: **LB**
Mercury	0.27	0.02		mg/Kg-dry	1	7/5/2013
Metals by ICP/MS	**SW6020 (SW3050B)**			Prep Date: **7/2/2013**		Analyst: **JG**
Arsenic	18	1.2		mg/Kg-dry	10	7/2/2013
Barium	400	1.2		mg/Kg-dry	10	7/2/2013
Cadmium	3.8	0.61		mg/Kg-dry	10	7/2/2013
Chromium	9.9	1.2		mg/Kg-dry	10	7/2/2013
Lead	680	0.61		mg/Kg-dry	10	7/2/2013
Selenium	ND	1.2		mg/Kg-dry	10	7/2/2013
Silver	1.6	1.2		mg/Kg-dry	10	7/2/2013
Semivolatile Organic Compounds by GC/MS	**SW8270C (SW3550B)**			Prep Date: **7/1/2013**		Analyst: **DM**
Acenaphthene	ND	0.04		mg/Kg-dry	1	7/2/2013
Acenaphthylene	ND	0.04		mg/Kg-dry	1	7/2/2013
Anthracene	ND	0.04		mg/Kg-dry	1	7/2/2013
Benz(a)anthracene	0.1	0.04		mg/Kg-dry	1	7/2/2013
Benzo(a)pyrene	0.1	0.04		mg/Kg-dry	1	7/2/2013
Benzo(b)fluoranthene	0.087	0.04		mg/Kg-dry	1	7/2/2013
Benzo(g,h,i)perylene	0.058	0.04		mg/Kg-dry	1	7/2/2013
Benzo(k)fluoranthene	0.1	0.04		mg/Kg-dry	1	7/2/2013
Chrysene	0.12	0.04		mg/Kg-dry	1	7/2/2013
Dibenz(a,h)anthracene	ND	0.04		mg/Kg-dry	1	7/2/2013
Fluoranthene	0.22	0.04		mg/Kg-dry	1	7/2/2013
Fluorene	ND	0.04		mg/Kg-dry	1	7/2/2013
Indeno(1,2,3-cd)pyrene	0.057	0.04		mg/Kg-dry	1	7/2/2013
Naphthalene	ND	0.04		mg/Kg-dry	1	7/2/2013
Phenanthrene	0.17	0.04		mg/Kg-dry	1	7/2/2013
Pyrene	0.2	0.04		mg/Kg-dry	1	7/2/2013
BTEX by GC/MS	**SW5035/8260B**			Prep Date: **7/1/2013**		Analyst: **PS**
Benzene	ND	0.0046		mg/Kg-dry	1	7/2/2013
Ethylbenzene	ND	0.0046		mg/Kg-dry	1	7/2/2013
Toluene	ND	0.0046		mg/Kg-dry	1	7/2/2013
Xylenes, Total	ND	0.013		mg/Kg-dry	1	7/2/2013
Percent Moisture	**D2974**			Prep Date: **7/2/2013**		Analyst: **SDA**
Percent Moisture	17.7	0.2	*	wt%	1	7/2/2013

Qualifiers:

ND - Not Detected at the Reporting Limit
J - Analyte detected below quantitation limits
B - Analyte detected in the associated Method Blank
HT - Sample received past holding time
* - Non-accredited parameter
RL - Reporting / Quantitation Limit for the analysis
S - Spike Recovery outside accepted recovery limits
R - RPD outside accepted recovery limits
E - Value above quantitation range
H - Holding time exceeded

STAT Analysis Corporation
2242 West Harrison St., Suite 200, Chicago, IL 60612-3766
Tel: (312) 733-0551 Fax: (312) 733-2386 STATinfo@STATAnalysis.com
Accreditation Numbers: IEPA ELAP 100445; ORELAP IL300001; AIHA 101160; NVLAP LabCode 101202

Date Reported: September 30, 2013
Date Printed: September 30, 2013

Client: Terracon Consultants, Inc.
Lab Order: 13060993
Project: A2137008, 650 West 83rd, Chicago, IL
Lab ID: 13060993-003

Client Sample ID: B-37 (1-3)
Collection Date 6/27/2013 2:00:00 PM
Matrix: Soil

Analyses	Result	RL	Qualifier	Units	DF	Date Analyzed
Mercury	**SW7471A**			Prep Date: **7/5/2013**		Analyst: **LB**
Mercury	0.17	0.023		mg/Kg-dry	1	7/5/2013
Metals by ICP/MS	**SW6020 (SW3050B)**			Prep Date: **7/2/2013**		Analyst: **JG**
Arsenic	5.5	1.1		mg/Kg-dry	10	7/2/2013
Barium	140	1.1		mg/Kg-dry	10	7/2/2013
Cadmium	1.2	0.55		mg/Kg-dry	10	7/2/2013
Chromium	19	1.1		mg/Kg-dry	10	7/2/2013
Lead	190	0.55		mg/Kg-dry	10	7/2/2013
Selenium	ND	1.1		mg/Kg-dry	10	7/2/2013
Silver	ND	1.1		mg/Kg-dry	10	7/2/2013
Semivolatile Organic Compounds by GC/MS	**SW8270C (SW3550B)**			Prep Date: **7/1/2013**		Analyst: **DM**
Acenaphthene	0.73	0.038		mg/Kg-dry	1	7/2/2013
Acenaphthylene	0.43	0.038		mg/Kg-dry	1	7/2/2013
Anthracene	2.3	0.038		mg/Kg-dry	1	7/2/2013
Benz(a)anthracene	6	0.38		mg/Kg-dry	10	7/3/2013
Benzo(a)pyrene	5.9	0.38		mg/Kg-dry	10	7/3/2013
Benzo(b)fluoranthene	6	0.38		mg/Kg-dry	10	7/3/2013
Benzo(g,h,i)perylene	3.1	0.038		mg/Kg-dry	1	7/2/2013
Benzo(k)fluoranthene	4.7	0.38		mg/Kg-dry	10	7/3/2013
Chrysene	6.4	0.38		mg/Kg-dry	10	7/3/2013
Dibenz(a,h)anthracene	1.6	0.038		mg/Kg-dry	1	7/2/2013
Fluoranthene	13	0.38		mg/Kg-dry	10	7/3/2013
Fluorene	1	0.038		mg/Kg-dry	1	7/2/2013
Indeno(1,2,3-cd)pyrene	2.8	0.038		mg/Kg-dry	1	7/2/2013
Naphthalene	0.54	0.038		mg/Kg-dry	1	7/2/2013
Phenanthrene	8.9	0.38		mg/Kg-dry	10	7/3/2013
Pyrene	11	0.38		mg/Kg-dry	10	7/3/2013
BTEX by GC/MS	**SW5035/8260B**			Prep Date: **7/1/2013**		Analyst: **PS**
Benzene	ND	0.0085		mg/Kg-dry	1	7/2/2013
Ethylbenzene	ND	0.0085		mg/Kg-dry	1	7/2/2013
Toluene	ND	0.0085		mg/Kg-dry	1	7/2/2013
Xylenes, Total	ND	0.026		mg/Kg-dry	1	7/2/2013
Percent Moisture	**D2974**			Prep Date: **7/2/2013**		Analyst: **SDA**
Percent Moisture	14.3	0.2	*	wt%	1	7/2/2013

Qualifiers:
ND - Not Detected at the Reporting Limit
J - Analyte detected below quantitation limits
B - Analyte detected in the associated Method Blank
HT - Sample received past holding time
* - Non-accredited parameter
RL - Reporting / Quantitation Limit for the analysis
S - Spike Recovery outside accepted recovery limits
R - RPD outside accepted recovery limits
E - Value above quantitation range
H - Holding time exceeded

STAT Analysis Corporation
2242 West Harrison St., Suite 200, Chicago, IL 60612-3766
Tel: (312) 733-0551 Fax: (312) 733-2386 STATinfo@STATAnalysis.com
Accreditation Numbers: IEPA ELAP 100445; ORELAP IL300001; AIHA 101160; NVLAP LabCode 101202

Date Reported: September 30, 2013
Date Printed: September 30, 2013

Client: Terracon Consultants, Inc.
Lab Order: 13060993
Project: A2137008, 650 West 83rd, Chicago, IL
Lab ID: 13060993-004

Client Sample ID: B-37 (6-8)
Collection Date 6/27/2013 2:10:00 PM
Matrix: Soil

Analyses	Result	RL	Qualifier	Units	DF	Date Analyzed
Mercury	**SW7471A**			Prep Date: **7/5/2013**		Analyst: **LB**
Mercury	0.21	0.021		mg/Kg-dry	1	7/5/2013
Metals by ICP/MS	**SW6020 (SW3050B)**			Prep Date: **7/2/2013**		Analyst: **JG**
Arsenic	5.6	1.2		mg/Kg-dry	10	7/2/2013
Barium	66	1.2		mg/Kg-dry	10	7/2/2013
Cadmium	ND	0.59		mg/Kg-dry	10	7/2/2013
Chromium	14	1.2		mg/Kg-dry	10	7/2/2013
Lead	330	0.59		mg/Kg-dry	10	7/2/2013
Selenium	ND	1.2		mg/Kg-dry	10	7/2/2013
Silver	ND	1.2		mg/Kg-dry	10	7/2/2013
Semivolatile Organic Compounds by GC/MS	**SW8270C (SW3550B)**			Prep Date: **7/1/2013**		Analyst: **DM**
Acenaphthene	0.34	0.042		mg/Kg-dry	1	7/2/2013
Acenaphthylene	0.094	0.042		mg/Kg-dry	1	7/2/2013
Anthracene	0.87	0.042		mg/Kg-dry	1	7/2/2013
Benz(a)anthracene	1.7	0.042		mg/Kg-dry	1	7/2/2013
Benzo(a)pyrene	1.6	0.042		mg/Kg-dry	1	7/2/2013
Benzo(b)fluoranthene	1.1	0.042		mg/Kg-dry	1	7/2/2013
Benzo(g,h,i)perylene	0.8	0.042		mg/Kg-dry	1	7/2/2013
Benzo(k)fluoranthene	1.1	0.042		mg/Kg-dry	1	7/2/2013
Chrysene	1.8	0.042		mg/Kg-dry	1	7/2/2013
Dibenz(a,h)anthracene	0.39	0.042		mg/Kg-dry	1	7/2/2013
Fluoranthene	3	0.042		mg/Kg-dry	1	7/2/2013
Fluorene	0.38	0.042		mg/Kg-dry	1	7/2/2013
Indeno(1,2,3-cd)pyrene	0.65	0.042		mg/Kg-dry	1	7/2/2013
Naphthalene	0.12	0.042		mg/Kg-dry	1	7/2/2013
Phenanthrene	4.1	0.042		mg/Kg-dry	1	7/2/2013
Pyrene	4.1	0.042		mg/Kg-dry	1	7/2/2013
BTEX by GC/MS	**SW5035/8260B**			Prep Date: **7/1/2013**		Analyst: **PS**
Benzene	ND	0.006		mg/Kg-dry	1	7/2/2013
Ethylbenzene	ND	0.006		mg/Kg-dry	1	7/2/2013
Toluene	ND	0.006		mg/Kg-dry	1	7/2/2013
Xylenes, Total	ND	0.018		mg/Kg-dry	1	7/2/2013
Percent Moisture	**D2974**			Prep Date: **7/2/2013**		Analyst: **SDA**
Percent Moisture	21.6	0.2	*	wt%	1	7/2/2013

Qualifiers:
ND - Not Detected at the Reporting Limit
J - Analyte detected below quantitation limits
B - Analyte detected in the associated Method Blank
HT - Sample received past holding time
* - Non-accredited parameter
RL - Reporting / Quantitation Limit for the analysis
S - Spike Recovery outside accepted recovery limits
R - RPD outside accepted recovery limits
E - Value above quantitation range
H - Holding time exceeded

STAT Analysis Corporation
2242 West Harrison St., Suite 200, Chicago, IL 60612-3766
Tel: (312) 733-0551 Fax: (312) 733-2386 STATinfo@STATAnalysis.com
Accreditation Numbers: IEPA ELAP 100445; ORELAP IL300001; AIHA 101160; NVLAP LabCode 101202

Date Reported: September 30, 2013
Date Printed: September 30, 2013

Client: Terracon Consultants, Inc.
Lab Order: 13060993
Project: A2137008, 650 West 83rd, Chicago, IL
Lab ID: 13060993-005

Client Sample ID: B-1 (1-3)
Collection Date 6/27/2013 1:35:00 PM
Matrix: Soil

Analyses	Result	RL	Qualifier	Units	DF	Date Analyzed
PCBs	**SW8082 (SW3550B)**			Prep Date: **6/28/2013**		Analyst: **GVC**
Aroclor 1016	ND	0.085		mg/Kg-dry	1	6/30/2013
Aroclor 1221	ND	0.085		mg/Kg-dry	1	6/30/2013
Aroclor 1232	ND	0.085		mg/Kg-dry	1	6/30/2013
Aroclor 1242	ND	0.085		mg/Kg-dry	1	6/30/2013
Aroclor 1248	ND	0.085		mg/Kg-dry	1	6/30/2013
Aroclor 1254	ND	0.085		mg/Kg-dry	1	6/30/2013
Aroclor 1260	ND	0.085		mg/Kg-dry	1	6/30/2013
Pesticides	**SW8081 (SW3550B)**			Prep Date: **6/28/2013**		Analyst: **GVC**
4,4'-DDD	ND	0.0017		mg/Kg-dry	1	6/30/2013
4,4'-DDE	ND	0.0017		mg/Kg-dry	1	6/30/2013
4,4'-DDT	ND	0.0017		mg/Kg-dry	1	6/30/2013
Aldrin	ND	0.0017		mg/Kg-dry	1	6/30/2013
alpha-BHC	ND	0.0017		mg/Kg-dry	1	6/30/2013
alpha-Chlordane	ND	0.0017		mg/Kg-dry	1	6/30/2013
beta-BHC	ND	0.0017		mg/Kg-dry	1	6/30/2013
Chlordane	ND	0.017		mg/Kg-dry	1	6/30/2013
delta-BHC	ND	0.0017		mg/Kg-dry	1	6/30/2013
Dieldrin	ND	0.0017		mg/Kg-dry	1	6/30/2013
Endosulfan I	ND	0.0017		mg/Kg-dry	1	6/30/2013
Endosulfan II	ND	0.0017		mg/Kg-dry	1	6/30/2013
Endosulfan sulfate	ND	0.0017		mg/Kg-dry	1	6/30/2013
Endrin	ND	0.0017		mg/Kg-dry	1	6/30/2013
Endrin aldehyde	ND	0.0017		mg/Kg-dry	1	6/30/2013
Endrin ketone	ND	0.0017		mg/Kg-dry	1	6/30/2013
gamma-BHC	ND	0.0017		mg/Kg-dry	1	6/30/2013
gamma-Chlordane	ND	0.0017		mg/Kg-dry	1	6/30/2013
Heptachlor	ND	0.0017		mg/Kg-dry	1	6/30/2013
Heptachlor epoxide	ND	0.0017		mg/Kg-dry	1	6/30/2013
Methoxychlor	ND	0.0017		mg/Kg-dry	1	6/30/2013
Toxaphene	ND	0.036		mg/Kg-dry	1	6/30/2013
Herbicides in Soil	**SW8321A (SW3550B)**			Prep Date: **7/1/2013**		Analyst: **MEP**
2,4,5-T	ND	0.0036		mg/Kg-dry	1	7/2/2013
2,4,5-TP (Silvex)	ND	0.0036		mg/Kg-dry	1	7/2/2013
2,4-D	ND	0.0036		mg/Kg-dry	1	7/2/2013
2,4-DB	ND	0.0072		mg/Kg-dry	1	7/2/2013
3,5-Dichlorobenzoic Acid	ND	0.0036	*	mg/Kg-dry	1	7/2/2013
4-Nitrophenol	ND	0.036	*	mg/Kg-dry	1	7/2/2013

Qualifiers:
ND - Not Detected at the Reporting Limit
J - Analyte detected below quantitation limits
B - Analyte detected in the associated Method Blank
HT - Sample received past holding time
* - Non-accredited parameter
RL - Reporting / Quantitation Limit for the analysis
S - Spike Recovery outside accepted recovery limits
R - RPD outside accepted recovery limits
E - Value above quantitation range
H - Holding time exceeded

STAT Analysis Corporation
2242 West Harrison St., Suite 200, Chicago, IL 60612-3766
Tel: (312) 733-0551 Fax: (312) 733-2386 STATinfo@STATAnalysis.com
Accreditation Numbers: IEPA ELAP 100445; ORELAP IL300001; AIHA 101160; NVLAP LabCode 101202

Date Reported: September 30, 2013
Date Printed: September 30, 2013

Client: Terracon Consultants, Inc.
Lab Order: 13060993
Project: A2137008, 650 West 83rd, Chicago, IL
Lab ID: 13060993-005

Client Sample ID: B-1 (1-3)
Collection Date 6/27/2013 1:35:00 PM
Matrix: Soil

Analyses	Result	RL	Qualifier	Units	DF	Date Analyzed
Herbicides in Soil	**SW8321A (SW3550B)**			Prep Date: **7/1/2013**		Analyst: **MEP**
Acifluorfen	ND	0.0036	*	mg/Kg-dry	1	7/2/2013
Chloramben	ND	0.0036	*	mg/Kg-dry	1	7/2/2013
Dalapon	ND	0.036		mg/Kg-dry	1	7/2/2013
Dicamba	ND	0.0072		mg/Kg-dry	1	7/2/2013
Dichlorprop	ND	0.0072		mg/Kg-dry	1	7/2/2013
Dinoseb	ND	0.0072		mg/Kg-dry	1	7/2/2013
MCPA	ND	0.0072		mg/Kg-dry	1	7/2/2013
MCPP	ND	0.0036		mg/Kg-dry	1	7/2/2013
Pentachlorophenol	ND	0.011	*	mg/Kg-dry	1	7/2/2013
Picloram	ND	0.0072	*	mg/Kg-dry	1	7/2/2013
Mercury	**SW7471A**			Prep Date: **7/5/2013**		Analyst: **LB**
Mercury	1.5	0.084		mg/Kg-dry	5	7/5/2013
Metals by ICP/MS	**SW6020 (SW3050B)**			Prep Date: **7/3/2013**		Analyst: **JG**
Aluminum	5200	23		mg/Kg-dry	10	7/3/2013
Antimony	ND	2.3		mg/Kg-dry	10	7/3/2013
Arsenic	4.6	1.1		mg/Kg-dry	10	7/3/2013
Barium	100	1.1		mg/Kg-dry	10	7/3/2013
Beryllium	0.72	0.57		mg/Kg-dry	10	7/3/2013
Cadmium	0.75	0.57		mg/Kg-dry	10	7/3/2013
Calcium	160000	680		mg/Kg-dry	100	7/3/2013
Chromium	24	1.1		mg/Kg-dry	10	7/3/2013
Cobalt	3.4	1.1		mg/Kg-dry	10	7/3/2013
Copper	45	2.8		mg/Kg-dry	10	7/3/2013
Iron	14000	340		mg/Kg-dry	100	7/3/2013
Lead	170	0.57		mg/Kg-dry	10	7/3/2013
Magnesium	74000	340		mg/Kg-dry	100	7/3/2013
Manganese	660	1.1		mg/Kg-dry	10	7/3/2013
Nickel	12	1.1		mg/Kg-dry	10	7/3/2013
Potassium	820	34		mg/Kg-dry	10	7/3/2013
Selenium	ND	1.1		mg/Kg-dry	10	7/3/2013
Silver	ND	1.1		mg/Kg-dry	10	7/3/2013
Sodium	340	68		mg/Kg-dry	10	7/3/2013
Thallium	ND	1.1		mg/Kg-dry	10	7/3/2013
Vanadium	29	1.1		mg/Kg-dry	10	7/3/2013
Zinc	140	5.7		mg/Kg-dry	10	7/3/2013
Semivolatile Organic Compounds by GC/MS	**SW8270C (SW3550B)**			Prep Date: **7/1/2013**		Analyst: **DM**
Acenaphthene	0.57	0.35		mg/Kg-dry	1	7/2/2013

Qualifiers:
ND - Not Detected at the Reporting Limit
J - Analyte detected below quantitation limits
B - Analyte detected in the associated Method Blank
HT - Sample received past holding time
* - Non-accredited parameter
RL - Reporting / Quantitation Limit for the analysis
S - Spike Recovery outside accepted recovery limits
R - RPD outside accepted recovery limits
E - Value above quantitation range
H - Holding time exceeded

STAT Analysis Corporation
2242 West Harrison St., Suite 200, Chicago, IL 60612-3766
Tel: (312) 733-0551 Fax: (312) 733-2386 STATinfo@STATAnalysis.com
Accreditation Numbers: IEPA ELAP 100445; ORELAP IL300001; AIHA 101160; NVLAP LabCode 101202

Date Reported: September 30, 2013
Date Printed: September 30, 2013

Client: Terracon Consultants, Inc.
Lab Order: 13060993
Project: A2137008, 650 West 83rd, Chicago, IL
Lab ID: 13060993-005

Client Sample ID: B-1 (1-3)
Collection Date 6/27/2013 1:35:00 PM
Matrix: Soil

Analyses	Result	RL	Qualifier	Units	DF	Date Analyzed
Semivolatile Organic Compounds by GC/MS	**SW8270C (SW3550B)**		Prep Date: **7/1/2013**			Analyst: **DM**
Acenaphthylene	0.36	0.35		mg/Kg-dry	1	7/2/2013
Aniline	ND	3.6		mg/Kg-dry	1	7/2/2013
Anthracene	2.3	0.35		mg/Kg-dry	1	7/2/2013
Benz(a)anthracene	4.6	0.35		mg/Kg-dry	1	7/2/2013
Benzidine	ND	3.5		mg/Kg-dry	1	7/2/2013
Benzo(a)pyrene	4.6	0.35		mg/Kg-dry	1	7/2/2013
Benzo(b)fluoranthene	4.2	0.35		mg/Kg-dry	1	7/2/2013
Benzo(g,h,i)perylene	2.5	0.35		mg/Kg-dry	1	7/2/2013
Benzo(k)fluoranthene	3.7	0.35		mg/Kg-dry	1	7/2/2013
Benzoic acid	ND	8.9		mg/Kg-dry	1	7/2/2013
Benzyl alcohol	ND	1.8		mg/Kg-dry	1	7/2/2013
Bis(2-chloroethoxy)methane	ND	1.8		mg/Kg-dry	1	7/2/2013
Bis(2-chloroethyl)ether	ND	1.8		mg/Kg-dry	1	7/2/2013
Bis(2-ethylhexyl)phthalate	ND	8.9		mg/Kg-dry	1	7/2/2013
4-Bromophenyl phenyl ether	ND	1.8		mg/Kg-dry	1	7/2/2013
Butyl benzyl phthalate	ND	1.8		mg/Kg-dry	1	7/2/2013
Carbazole	ND	1.8		mg/Kg-dry	1	7/2/2013
4-Chloroaniline	ND	1.8		mg/Kg-dry	1	7/2/2013
4-Chloro-3-methylphenol	ND	3.5		mg/Kg-dry	1	7/2/2013
2-Chloronaphthalene	ND	1.8		mg/Kg-dry	1	7/2/2013
2-Chlorophenol	ND	1.8		mg/Kg-dry	1	7/2/2013
4-Chlorophenyl phenyl ether	ND	1.8		mg/Kg-dry	1	7/2/2013
Chrysene	4.4	0.35		mg/Kg-dry	1	7/2/2013
Dibenz(a,h)anthracene	1.4	0.35		mg/Kg-dry	1	7/2/2013
Dibenzofuran	ND	1.8		mg/Kg-dry	1	7/2/2013
1,2-Dichlorobenzene	ND	1.8		mg/Kg-dry	1	7/2/2013
1,3-Dichlorobenzene	ND	1.8		mg/Kg-dry	1	7/2/2013
1,4-Dichlorobenzene	ND	1.8		mg/Kg-dry	1	7/2/2013
3,3'-Dichlorobenzidine	ND	1.8		mg/Kg-dry	1	7/2/2013
2,4-Dichlorophenol	ND	1.8		mg/Kg-dry	1	7/2/2013
Diethyl phthalate	ND	1.8		mg/Kg-dry	1	7/2/2013
2,4-Dimethylphenol	ND	1.8		mg/Kg-dry	1	7/2/2013
Dimethyl phthalate	ND	1.8		mg/Kg-dry	1	7/2/2013
4,6-Dinitro-2-methylphenol	ND	3.5		mg/Kg-dry	1	7/2/2013
2,4-Dinitrophenol	ND	8.9		mg/Kg-dry	1	7/2/2013
2,4-Dinitrotoluene	ND	0.35		mg/Kg-dry	1	7/2/2013
2,6-Dinitrotoluene	ND	0.35		mg/Kg-dry	1	7/2/2013
Di-n-butyl phthalate	ND	1.8		mg/Kg-dry	1	7/2/2013

Qualifiers:
ND - Not Detected at the Reporting Limit
J - Analyte detected below quantitation limits
B - Analyte detected in the associated Method Blank
HT - Sample received past holding time
* - Non-accredited parameter
RL - Reporting / Quantitation Limit for the analysis
S - Spike Recovery outside accepted recovery limits
R - RPD outside accepted recovery limits
E - Value above quantitation range
H - Holding time exceeded

STAT Analysis Corporation
2242 West Harrison St., Suite 200, Chicago, IL 60612-3766
Tel: (312) 733-0551 Fax: (312) 733-2386 STATinfo@STATAnalysis.com
Accreditation Numbers: IEPA ELAP 100445; ORELAP IL300001; AIHA 101160; NVLAP LabCode 101202

Date Reported: September 30, 2013
Date Printed: September 30, 2013

Client: Terracon Consultants, Inc.
Lab Order: 13060993
Project: A2137008, 650 West 83rd, Chicago, IL
Lab ID: 13060993-005

Client Sample ID: B-1 (1-3)
Collection Date 6/27/2013 1:35:00 PM
Matrix: Soil

Analyses	Result	RL	Qualifier	Units	DF	Date Analyzed
Semivolatile Organic Compounds by GC/MS	**SW8270C (SW3550B)**			Prep Date: **7/1/2013**		Analyst: **DM**
Di-n-octyl phthalate	ND	1.8		mg/Kg-dry	1	7/2/2013
Fluoranthene	10	0.35		mg/Kg-dry	1	7/2/2013
Fluorene	1.1	0.35		mg/Kg-dry	1	7/2/2013
Hexachlorobenzene	ND	1.8		mg/Kg-dry	1	7/2/2013
Hexachlorobutadiene	ND	1.8		mg/Kg-dry	1	7/2/2013
Hexachlorocyclopentadiene	ND	1.8		mg/Kg-dry	1	7/2/2013
Hexachloroethane	ND	1.8		mg/Kg-dry	1	7/2/2013
Indeno(1,2,3-cd)pyrene	2.3	0.35		mg/Kg-dry	1	7/2/2013
Isophorone	ND	1.8		mg/Kg-dry	1	7/2/2013
2-Methylnaphthalene	ND	1.8		mg/Kg-dry	1	7/2/2013
2-Methylphenol	ND	1.8		mg/Kg-dry	1	7/2/2013
4-Methylphenol	ND	1.8		mg/Kg-dry	1	7/2/2013
Naphthalene	ND	0.35		mg/Kg-dry	1	7/2/2013
2-Nitroaniline	ND	1.8		mg/Kg-dry	1	7/2/2013
3-Nitroaniline	ND	1.8		mg/Kg-dry	1	7/2/2013
4-Nitroaniline	ND	1.8		mg/Kg-dry	1	7/2/2013
2-Nitrophenol	ND	1.8		mg/Kg-dry	1	7/2/2013
4-Nitrophenol	ND	3.5		mg/Kg-dry	1	7/2/2013
Nitrobenzene	ND	0.35		mg/Kg-dry	1	7/2/2013
N-Nitrosodi-n-propylamine	ND	0.35		mg/Kg-dry	1	7/2/2013
N-Nitrosodimethylamine	ND	1.8		mg/Kg-dry	1	7/2/2013
N-Nitrosodiphenylamine	ND	0.35		mg/Kg-dry	1	7/2/2013
2, 2'-oxybis(1-Chloropropane)	ND	1.8		mg/Kg-dry	1	7/2/2013
Pentachlorophenol	ND	0.72		mg/Kg-dry	1	7/2/2013
Phenanthrene	7.5	0.35		mg/Kg-dry	1	7/2/2013
Phenol	ND	1.8		mg/Kg-dry	1	7/2/2013
Pyrene	7.9	0.35		mg/Kg-dry	1	7/2/2013
Pyridine	ND	7.2		mg/Kg-dry	1	7/2/2013
1,2,4-Trichlorobenzene	ND	1.8		mg/Kg-dry	1	7/2/2013
2,4,5-Trichlorophenol	ND	1.8		mg/Kg-dry	1	7/2/2013
2,4,6-Trichlorophenol	ND	1.8		mg/Kg-dry	1	7/2/2013
Volatile Organic Compounds by GC/MS	**SW5035/8260B**			Prep Date: **7/1/2013**		Analyst: **PS**
Acetone	ND	0.085		mg/Kg-dry	1	7/1/2013
Benzene	ND	0.0056		mg/Kg-dry	1	7/1/2013
Bromodichloromethane	ND	0.0056		mg/Kg-dry	1	7/1/2013
Bromoform	ND	0.0056		mg/Kg-dry	1	7/1/2013
Bromomethane	ND	0.011		mg/Kg-dry	1	7/1/2013
2-Butanone	ND	0.085		mg/Kg-dry	1	7/1/2013

Qualifiers:
ND - Not Detected at the Reporting Limit
J - Analyte detected below quantitation limits
B - Analyte detected in the associated Method Blank
HT - Sample received past holding time
* - Non-accredited parameter
RL - Reporting / Quantitation Limit for the analysis
S - Spike Recovery outside accepted recovery limits
R - RPD outside accepted recovery limits
E - Value above quantitation range
H - Holding time exceeded

STAT Analysis Corporation
2242 West Harrison St., Suite 200, Chicago, IL 60612-3766
Tel: (312) 733-0551 Fax: (312) 733-2386 STATinfo@STATAnalysis.com
Accreditation Numbers: IEPA ELAP 100445; ORELAP IL300001; AIHA 101160; NVLAP LabCode 101202

Date Reported: September 30, 2013
Date Printed: September 30, 2013

Client: Terracon Consultants, Inc.
Lab Order: 13060993
Project: A2137008, 650 West 83rd, Chicago, IL
Lab ID: 13060993-005

Client Sample ID: B-1 (1-3)
Collection Date 6/27/2013 1:35:00 PM
Matrix: Soil

Analyses	Result	RL	Qualifier	Units	DF	Date Analyzed
Volatile Organic Compounds by GC/MS	**SW5035/8260B**			Prep Date: **7/1/2013**		Analyst: **PS**
Carbon disulfide	ND	0.056		mg/Kg-dry	1	7/1/2013
Carbon tetrachloride	ND	0.0056		mg/Kg-dry	1	7/1/2013
Chlorobenzene	ND	0.0056		mg/Kg-dry	1	7/1/2013
Chloroethane	ND	0.011		mg/Kg-dry	1	7/1/2013
Chloroform	ND	0.0056		mg/Kg-dry	1	7/1/2013
Chloromethane	ND	0.011		mg/Kg-dry	1	7/1/2013
Dibromochloromethane	ND	0.0056		mg/Kg-dry	1	7/1/2013
1,1-Dichloroethane	ND	0.0056		mg/Kg-dry	1	7/1/2013
1,2-Dichloroethane	ND	0.0056		mg/Kg-dry	1	7/1/2013
1,1-Dichloroethene	ND	0.0056		mg/Kg-dry	1	7/1/2013
cis-1,2-Dichloroethene	ND	0.0056		mg/Kg-dry	1	7/1/2013
trans-1,2-Dichloroethene	ND	0.0056		mg/Kg-dry	1	7/1/2013
1,2-Dichloropropane	ND	0.0056		mg/Kg-dry	1	7/1/2013
cis-1,3-Dichloropropene	ND	0.0023		mg/Kg-dry	1	7/1/2013
trans-1,3-Dichloropropene	ND	0.0023		mg/Kg-dry	1	7/1/2013
Ethylbenzene	ND	0.0056		mg/Kg-dry	1	7/1/2013
2-Hexanone	ND	0.023		mg/Kg-dry	1	7/1/2013
4-Methyl-2-pentanone	ND	0.023		mg/Kg-dry	1	7/1/2013
Methylene chloride	ND	0.011		mg/Kg-dry	1	7/1/2013
Methyl tert-butyl ether	ND	0.0056		mg/Kg-dry	1	7/1/2013
Styrene	ND	0.0056		mg/Kg-dry	1	7/1/2013
1,1,2,2-Tetrachloroethane	ND	0.0056		mg/Kg-dry	1	7/1/2013
Tetrachloroethene	ND	0.0056		mg/Kg-dry	1	7/1/2013
Toluene	ND	0.0056		mg/Kg-dry	1	7/1/2013
1,1,1-Trichloroethane	ND	0.0056		mg/Kg-dry	1	7/1/2013
1,1,2-Trichloroethane	ND	0.0056		mg/Kg-dry	1	7/1/2013
Trichloroethene	ND	0.0056		mg/Kg-dry	1	7/1/2013
Vinyl chloride	ND	0.0056		mg/Kg-dry	1	7/1/2013
Xylenes, Total	ND	0.017		mg/Kg-dry	1	7/1/2013
Cyanide, Total	**SW9012A**			Prep Date: **7/1/2013**		Analyst: **YZ**
Cyanide	ND	0.27		mg/Kg-dry	1	7/2/2013
pH (25 °C)	**SW9045C**			Prep Date: **6/29/2013**		Analyst: **PBG**
pH	8.4			pH Units	1	6/29/2013
Percent Moisture	**D2974**			Prep Date: **7/2/2013**		Analyst: **SDA**
Percent Moisture	7.2	0.2	*	wt%	1	7/2/2013

Qualifiers:
ND - Not Detected at the Reporting Limit
J - Analyte detected below quantitation limits
B - Analyte detected in the associated Method Blank
HT - Sample received past holding time
* - Non-accredited parameter
RL - Reporting / Quantitation Limit for the analysis
S - Spike Recovery outside accepted recovery limits
R - RPD outside accepted recovery limits
E - Value above quantitation range
H - Holding time exceeded

STAT Analysis Corporation
2242 West Harrison St., Suite 200, Chicago, IL 60612-3766
Tel: (312) 733-0551 Fax: (312) 733-2386 STATinfo@STATAnalysis.com
Accreditation Numbers: IEPA ELAP 100445; ORELAP IL300001; AIHA 101160; NVLAP LabCode 101202

Date Reported: September 30, 2013
Date Printed: September 30, 2013

Client: Terracon Consultants, Inc.
Lab Order: 13060993
Project: A2137008, 650 West 83rd, Chicago, IL
Lab ID: 13060993-006

Client Sample ID: B-1 (4-6)
Collection Date 6/27/2013 1:40:00 PM
Matrix: Soil

Analyses	Result	RL	Qualifier	Units	DF	Date Analyzed
PCBs	**SW8082 (SW3550B)**			Prep Date: **6/28/2013**		Analyst: **GVC**
Aroclor 1016	ND	0.092		mg/Kg-dry	1	6/30/2013
Aroclor 1221	ND	0.092		mg/Kg-dry	1	6/30/2013
Aroclor 1232	ND	0.092		mg/Kg-dry	1	6/30/2013
Aroclor 1242	ND	0.092		mg/Kg-dry	1	6/30/2013
Aroclor 1248	ND	0.092		mg/Kg-dry	1	6/30/2013
Aroclor 1254	ND	0.092		mg/Kg-dry	1	6/30/2013
Aroclor 1260	ND	0.092		mg/Kg-dry	1	6/30/2013
Pesticides	**SW8081 (SW3550B)**			Prep Date: **6/28/2013**		Analyst: **GVC**
4,4'-DDD	ND	0.0019		mg/Kg-dry	1	6/30/2013
4,4'-DDE	ND	0.0019		mg/Kg-dry	1	6/30/2013
4,4'-DDT	ND	0.0019		mg/Kg-dry	1	6/30/2013
Aldrin	ND	0.0019		mg/Kg-dry	1	6/30/2013
alpha-BHC	ND	0.0019		mg/Kg-dry	1	6/30/2013
alpha-Chlordane	ND	0.0019		mg/Kg-dry	1	6/30/2013
beta-BHC	ND	0.0019		mg/Kg-dry	1	6/30/2013
Chlordane	ND	0.019		mg/Kg-dry	1	6/30/2013
delta-BHC	ND	0.0019		mg/Kg-dry	1	6/30/2013
Dieldrin	ND	0.0019		mg/Kg-dry	1	6/30/2013
Endosulfan I	ND	0.0019		mg/Kg-dry	1	6/30/2013
Endosulfan II	ND	0.0019		mg/Kg-dry	1	6/30/2013
Endosulfan sulfate	ND	0.0019		mg/Kg-dry	1	6/30/2013
Endrin	ND	0.0019		mg/Kg-dry	1	6/30/2013
Endrin aldehyde	ND	0.0019		mg/Kg-dry	1	6/30/2013
Endrin ketone	ND	0.0019		mg/Kg-dry	1	6/30/2013
gamma-BHC	ND	0.0019		mg/Kg-dry	1	6/30/2013
gamma-Chlordane	ND	0.0019		mg/Kg-dry	1	6/30/2013
Heptachlor	ND	0.0019		mg/Kg-dry	1	6/30/2013
Heptachlor epoxide	ND	0.0019		mg/Kg-dry	1	6/30/2013
Methoxychlor	ND	0.0019		mg/Kg-dry	1	6/30/2013
Toxaphene	ND	0.038		mg/Kg-dry	1	6/30/2013
Herbicides in Soil	**SW8321A (SW3550B)**			Prep Date: **7/1/2013**		Analyst: **MEP**
2,4,5-T	ND	0.0038		mg/Kg-dry	1	7/2/2013
2,4,5-TP (Silvex)	ND	0.0038		mg/Kg-dry	1	7/2/2013
2,4-D	ND	0.0038		mg/Kg-dry	1	7/2/2013
2,4-DB	ND	0.0077		mg/Kg-dry	1	7/2/2013
3,5-Dichlorobenzoic Acid	ND	0.0038	*	mg/Kg-dry	1	7/2/2013
4-Nitrophenol	ND	0.038	*	mg/Kg-dry	1	7/2/2013

Qualifiers:
ND - Not Detected at the Reporting Limit
J - Analyte detected below quantitation limits
B - Analyte detected in the associated Method Blank
HT - Sample received past holding time
* - Non-accredited parameter
RL - Reporting / Quantitation Limit for the analysis
S - Spike Recovery outside accepted recovery limits
R - RPD outside accepted recovery limits
E - Value above quantitation range
H - Holding time exceeded

STAT Analysis Corporation
2242 West Harrison St., Suite 200, Chicago, IL 60612-3766
Tel: (312) 733-0551 Fax: (312) 733-2386 STATinfo@STATAnalysis.com
Accreditation Numbers: IEPA ELAP 100445; ORELAP IL300001; AIHA 101160; NVLAP LabCode 101202

Date Reported: September 30, 2013
Date Printed: September 30, 2013

Client: Terracon Consultants, Inc.
Lab Order: 13060993
Project: A2137008, 650 West 83rd, Chicago, IL
Lab ID: 13060993-006

Client Sample ID: B-1 (4-6)
Collection Date 6/27/2013 1:40:00 PM
Matrix: Soil

Analyses	Result	RL	Qualifier	Units	DF	Date Analyzed
Herbicides in Soil	**SW8321A (SW3550B)**			Prep Date: **7/1/2013**		Analyst: **MEP**
Acifluorfen	ND	0.0038	*	mg/Kg-dry	1	7/2/2013
Chloramben	ND	0.0038	*	mg/Kg-dry	1	7/2/2013
Dalapon	ND	0.038		mg/Kg-dry	1	7/2/2013
Dicamba	ND	0.0077		mg/Kg-dry	1	7/2/2013
Dichlorprop	ND	0.0077		mg/Kg-dry	1	7/2/2013
Dinoseb	ND	0.0077		mg/Kg-dry	1	7/2/2013
MCPA	ND	0.0077		mg/Kg-dry	1	7/2/2013
MCPP	ND	0.0038		mg/Kg-dry	1	7/2/2013
Pentachlorophenol	ND	0.012	*	mg/Kg-dry	1	7/2/2013
Picloram	ND	0.0077	*	mg/Kg-dry	1	7/2/2013
Mercury	**SW7471A**			Prep Date: **7/5/2013**		Analyst: **LB**
Mercury	ND	0.02		mg/Kg-dry	1	7/5/2013
Metals by ICP/MS	**SW6020 (SW3050B)**			Prep Date: **7/3/2013**		Analyst: **JG**
Aluminum	10000	230		mg/Kg-dry	100	7/3/2013
Antimony	ND	2.3		mg/Kg-dry	10	7/3/2013
Arsenic	3.9	1.1		mg/Kg-dry	10	7/3/2013
Barium	140	1.1		mg/Kg-dry	10	7/3/2013
Beryllium	1.1	0.57		mg/Kg-dry	10	7/3/2013
Cadmium	ND	0.57		mg/Kg-dry	10	7/3/2013
Calcium	200000	690		mg/Kg-dry	100	7/3/2013
Chromium	6.7	1.1		mg/Kg-dry	10	7/3/2013
Cobalt	3.1	1.1		mg/Kg-dry	10	7/3/2013
Copper	10	2.9		mg/Kg-dry	10	7/3/2013
Iron	20000	340		mg/Kg-dry	100	7/3/2013
Lead	39	0.57		mg/Kg-dry	10	7/3/2013
Magnesium	53000	34		mg/Kg-dry	10	7/3/2013
Manganese	1800	11		mg/Kg-dry	100	7/3/2013
Nickel	10	1.1		mg/Kg-dry	10	7/3/2013
Potassium	570	34		mg/Kg-dry	10	7/3/2013
Selenium	ND	1.1		mg/Kg-dry	10	7/3/2013
Silver	ND	1.1		mg/Kg-dry	10	7/3/2013
Sodium	250	69		mg/Kg-dry	10	7/3/2013
Thallium	ND	1.1		mg/Kg-dry	10	7/3/2013
Vanadium	11	1.1		mg/Kg-dry	10	7/3/2013
Zinc	47	5.7		mg/Kg-dry	10	7/3/2013
Semivolatile Organic Compounds by GC/MS	**SW8270C (SW3550B)**			Prep Date: **7/1/2013**		Analyst: **DM**
Acenaphthene	ND	0.038		mg/Kg-dry	1	7/2/2013

Qualifiers:
ND - Not Detected at the Reporting Limit
J - Analyte detected below quantitation limits
B - Analyte detected in the associated Method Blank
HT - Sample received past holding time
* - Non-accredited parameter
RL - Reporting / Quantitation Limit for the analysis
S - Spike Recovery outside accepted recovery limits
R - RPD outside accepted recovery limits
E - Value above quantitation range
H - Holding time exceeded

STAT Analysis Corporation
2242 West Harrison St., Suite 200, Chicago, IL 60612-3766
Tel: (312) 733-0551 Fax: (312) 733-2386 STATinfo@STATAnalysis.com
Accreditation Numbers: IEPA ELAP 100445; ORELAP IL300001; AIHA 101160; NVLAP LabCode 101202

Date Reported: September 30, 2013
Date Printed: September 30, 2013

Client: Terracon Consultants, Inc.
Lab Order: 13060993
Project: A2137008, 650 West 83rd, Chicago, IL
Lab ID: 13060993-006

Client Sample ID: B-1 (4-6)
Collection Date 6/27/2013 1:40:00 PM
Matrix: Soil

Analyses	Result	RL	Qualifier	Units	DF	Date Analyzed
Semivolatile Organic Compounds by GC/MS	**SW8270C (SW3550B)**			Prep Date: **7/1/2013**		Analyst: **DM**
Acenaphthylene	ND	0.038		mg/Kg-dry	1	7/2/2013
Aniline	ND	0.38		mg/Kg-dry	1	7/2/2013
Anthracene	0.04	0.038		mg/Kg-dry	1	7/2/2013
Benz(a)anthracene	0.18	0.038		mg/Kg-dry	1	7/2/2013
Benzidine	ND	0.38		mg/Kg-dry	1	7/2/2013
Benzo(a)pyrene	0.17	0.038		mg/Kg-dry	1	7/2/2013
Benzo(b)fluoranthene	0.23	0.038		mg/Kg-dry	1	7/2/2013
Benzo(g,h,i)perylene	0.11	0.038		mg/Kg-dry	1	7/2/2013
Benzo(k)fluoranthene	0.14	0.038		mg/Kg-dry	1	7/2/2013
Benzoic acid	ND	0.96		mg/Kg-dry	1	7/2/2013
Benzyl alcohol	ND	0.2		mg/Kg-dry	1	7/2/2013
Bis(2-chloroethoxy)methane	ND	0.2		mg/Kg-dry	1	7/2/2013
Bis(2-chloroethyl)ether	ND	0.2		mg/Kg-dry	1	7/2/2013
Bis(2-ethylhexyl)phthalate	ND	0.96		mg/Kg-dry	1	7/2/2013
4-Bromophenyl phenyl ether	ND	0.2		mg/Kg-dry	1	7/2/2013
Butyl benzyl phthalate	ND	0.2		mg/Kg-dry	1	7/2/2013
Carbazole	ND	0.2		mg/Kg-dry	1	7/2/2013
4-Chloroaniline	ND	0.2		mg/Kg-dry	1	7/2/2013
4-Chloro-3-methylphenol	ND	0.38		mg/Kg-dry	1	7/2/2013
2-Chloronaphthalene	ND	0.2		mg/Kg-dry	1	7/2/2013
2-Chlorophenol	ND	0.2		mg/Kg-dry	1	7/2/2013
4-Chlorophenyl phenyl ether	ND	0.2		mg/Kg-dry	1	7/2/2013
Chrysene	0.19	0.038		mg/Kg-dry	1	7/2/2013
Dibenz(a,h)anthracene	0.073	0.038		mg/Kg-dry	1	7/2/2013
Dibenzofuran	ND	0.2		mg/Kg-dry	1	7/2/2013
1,2-Dichlorobenzene	ND	0.2		mg/Kg-dry	1	7/2/2013
1,3-Dichlorobenzene	ND	0.2		mg/Kg-dry	1	7/2/2013
1,4-Dichlorobenzene	ND	0.2		mg/Kg-dry	1	7/2/2013
3,3'-Dichlorobenzidine	ND	0.2		mg/Kg-dry	1	7/2/2013
2,4-Dichlorophenol	ND	0.2		mg/Kg-dry	1	7/2/2013
Diethyl phthalate	ND	0.2		mg/Kg-dry	1	7/2/2013
2,4-Dimethylphenol	ND	0.2		mg/Kg-dry	1	7/2/2013
Dimethyl phthalate	ND	0.2		mg/Kg-dry	1	7/2/2013
4,6-Dinitro-2-methylphenol	ND	0.38		mg/Kg-dry	1	7/2/2013
2,4-Dinitrophenol	ND	0.96		mg/Kg-dry	1	7/2/2013
2,4-Dinitrotoluene	ND	0.038		mg/Kg-dry	1	7/2/2013
2,6-Dinitrotoluene	ND	0.038		mg/Kg-dry	1	7/2/2013
Di-n-butyl phthalate	ND	0.2		mg/Kg-dry	1	7/2/2013

Qualifiers:
ND - Not Detected at the Reporting Limit
J - Analyte detected below quantitation limits
B - Analyte detected in the associated Method Blank
HT - Sample received past holding time
* - Non-accredited parameter
RL - Reporting / Quantitation Limit for the analysis
S - Spike Recovery outside accepted recovery limits
R - RPD outside accepted recovery limits
E - Value above quantitation range
H - Holding time exceeded

STAT Analysis Corporation
2242 West Harrison St., Suite 200, Chicago, IL 60612-3766
Tel: (312) 733-0551 Fax: (312) 733-2386 STATinfo@STATAnalysis.com
Accreditation Numbers: IEPA ELAP 100445; ORELAP IL300001; AIHA 101160; NVLAP LabCode 101202

Date Reported: September 30, 2013
Date Printed: September 30, 2013

Client: Terracon Consultants, Inc.
Lab Order: 13060993
Project: A2137008, 650 West 83rd, Chicago, IL
Lab ID: 13060993-006

Client Sample ID: B-1 (4-6)
Collection Date 6/27/2013 1:40:00 PM
Matrix: Soil

Analyses	Result	RL	Qualifier	Units	DF	Date Analyzed
Semivolatile Organic Compounds by GC/MS	**SW8270C (SW3550B)**			Prep Date: **7/1/2013**		Analyst: **DM**
Di-n-octyl phthalate	ND	0.2		mg/Kg-dry	1	7/2/2013
Fluoranthene	0.3	0.038		mg/Kg-dry	1	7/2/2013
Fluorene	ND	0.038		mg/Kg-dry	1	7/2/2013
Hexachlorobenzene	ND	0.2		mg/Kg-dry	1	7/2/2013
Hexachlorobutadiene	ND	0.2		mg/Kg-dry	1	7/2/2013
Hexachlorocyclopentadiene	ND	0.2		mg/Kg-dry	1	7/2/2013
Hexachloroethane	ND	0.2		mg/Kg-dry	1	7/2/2013
Indeno(1,2,3-cd)pyrene	0.093	0.038		mg/Kg-dry	1	7/2/2013
Isophorone	ND	0.2		mg/Kg-dry	1	7/2/2013
2-Methylnaphthalene	ND	0.2		mg/Kg-dry	1	7/2/2013
2-Methylphenol	ND	0.2		mg/Kg-dry	1	7/2/2013
4-Methylphenol	ND	0.2		mg/Kg-dry	1	7/2/2013
Naphthalene	ND	0.038		mg/Kg-dry	1	7/2/2013
2-Nitroaniline	ND	0.2		mg/Kg-dry	1	7/2/2013
3-Nitroaniline	ND	0.2		mg/Kg-dry	1	7/2/2013
4-Nitroaniline	ND	0.2		mg/Kg-dry	1	7/2/2013
2-Nitrophenol	ND	0.2		mg/Kg-dry	1	7/2/2013
4-Nitrophenol	ND	0.38		mg/Kg-dry	1	7/2/2013
Nitrobenzene	ND	0.038		mg/Kg-dry	1	7/2/2013
N-Nitrosodi-n-propylamine	ND	0.038		mg/Kg-dry	1	7/2/2013
N-Nitrosodimethylamine	ND	0.2		mg/Kg-dry	1	7/2/2013
N-Nitrosodiphenylamine	ND	0.038		mg/Kg-dry	1	7/2/2013
2, 2'-oxybis(1-Chloropropane)	ND	0.2		mg/Kg-dry	1	7/2/2013
Pentachlorophenol	ND	0.077		mg/Kg-dry	1	7/2/2013
Phenanthrene	0.11	0.038		mg/Kg-dry	1	7/2/2013
Phenol	ND	0.2		mg/Kg-dry	1	7/2/2013
Pyrene	0.28	0.038		mg/Kg-dry	1	7/2/2013
Pyridine	ND	0.77		mg/Kg-dry	1	7/2/2013
1,2,4-Trichlorobenzene	ND	0.2		mg/Kg-dry	1	7/2/2013
2,4,5-Trichlorophenol	ND	0.2		mg/Kg-dry	1	7/2/2013
2,4,6-Trichlorophenol	ND	0.2		mg/Kg-dry	1	7/2/2013
Volatile Organic Compounds by GC/MS	**SW5035/8260B**			Prep Date: **7/1/2013**		Analyst: **PS**
Acetone	ND	0.083		mg/Kg-dry	1	7/3/2013
Benzene	ND	0.0056		mg/Kg-dry	1	7/3/2013
Bromodichloromethane	ND	0.0056		mg/Kg-dry	1	7/3/2013
Bromoform	ND	0.0056		mg/Kg-dry	1	7/3/2013
Bromomethane	ND	0.011		mg/Kg-dry	1	7/3/2013
2-Butanone	ND	0.083		mg/Kg-dry	1	7/3/2013

Qualifiers:
ND - Not Detected at the Reporting Limit
J - Analyte detected below quantitation limits
B - Analyte detected in the associated Method Blank
HT - Sample received past holding time
* - Non-accredited parameter
RL - Reporting / Quantitation Limit for the analysis
S - Spike Recovery outside accepted recovery limits
R - RPD outside accepted recovery limits
E - Value above quantitation range
H - Holding time exceeded

STAT Analysis Corporation
2242 West Harrison St., Suite 200, Chicago, IL 60612-3766
Tel: (312) 733-0551 Fax: (312) 733-2386 STATinfo@STATAnalysis.com
Accreditation Numbers: IEPA ELAP 100445; ORELAP IL300001; AIHA 101160; NVLAP LabCode 101202

Date Reported: September 30, 2013
Date Printed: September 30, 2013

Client: Terracon Consultants, Inc.
Lab Order: 13060993
Project: A2137008, 650 West 83rd, Chicago, IL
Lab ID: 13060993-006

Client Sample ID: B-1 (4-6)
Collection Date 6/27/2013 1:40:00 PM
Matrix: Soil

Analyses	Result	RL	Qualifier	Units	DF	Date Analyzed
Volatile Organic Compounds by GC/MS	**SW5035/8260B**			Prep Date: **7/1/2013**		Analyst: **PS**
Carbon disulfide	ND	0.056		mg/Kg-dry	1	7/3/2013
Carbon tetrachloride	ND	0.0056		mg/Kg-dry	1	7/3/2013
Chlorobenzene	ND	0.0056		mg/Kg-dry	1	7/3/2013
Chloroethane	ND	0.011		mg/Kg-dry	1	7/3/2013
Chloroform	ND	0.0056		mg/Kg-dry	1	7/3/2013
Chloromethane	ND	0.011		mg/Kg-dry	1	7/3/2013
Dibromochloromethane	ND	0.0056		mg/Kg-dry	1	7/3/2013
1,1-Dichloroethane	ND	0.0056		mg/Kg-dry	1	7/3/2013
1,2-Dichloroethane	ND	0.0056		mg/Kg-dry	1	7/3/2013
1,1-Dichloroethene	ND	0.0056		mg/Kg-dry	1	7/3/2013
cis-1,2-Dichloroethene	ND	0.0056		mg/Kg-dry	1	7/3/2013
trans-1,2-Dichloroethene	ND	0.0056		mg/Kg-dry	1	7/3/2013
1,2-Dichloropropane	ND	0.0056		mg/Kg-dry	1	7/3/2013
cis-1,3-Dichloropropene	ND	0.0022		mg/Kg-dry	1	7/3/2013
trans-1,3-Dichloropropene	ND	0.0022		mg/Kg-dry	1	7/3/2013
Ethylbenzene	ND	0.0056		mg/Kg-dry	1	7/3/2013
2-Hexanone	ND	0.022		mg/Kg-dry	1	7/3/2013
4-Methyl-2-pentanone	ND	0.022		mg/Kg-dry	1	7/3/2013
Methylene chloride	ND	0.011		mg/Kg-dry	1	7/3/2013
Methyl tert-butyl ether	ND	0.0056		mg/Kg-dry	1	7/3/2013
Styrene	ND	0.0056		mg/Kg-dry	1	7/3/2013
1,1,2,2-Tetrachloroethane	ND	0.0056		mg/Kg-dry	1	7/3/2013
Tetrachloroethene	ND	0.0056		mg/Kg-dry	1	7/3/2013
Toluene	ND	0.0056		mg/Kg-dry	1	7/3/2013
1,1,1-Trichloroethane	ND	0.0056		mg/Kg-dry	1	7/3/2013
1,1,2-Trichloroethane	ND	0.0056		mg/Kg-dry	1	7/3/2013
Trichloroethene	ND	0.0056		mg/Kg-dry	1	7/3/2013
Vinyl chloride	ND	0.0056		mg/Kg-dry	1	7/3/2013
Xylenes, Total	ND	0.017		mg/Kg-dry	1	7/3/2013
Cyanide, Total	**SW9012A**			Prep Date: **7/1/2013**		Analyst: **YZ**
Cyanide	ND	0.29		mg/Kg-dry	1	7/2/2013
Organic Carbon Content	**D2974**			Prep Date: **7/16/2013**		Analyst: **SDA**
Organic Carbon Content	3.5	0.01	*	wt%	1	7/16/2013
pH (25 °C)	**SW9045C**			Prep Date: **6/29/2013**		Analyst: **PBG**
pH	11.6			pH Units	1	6/29/2013
Percent Moisture	**D2974**			Prep Date: **7/2/2013**		Analyst: **SDA**

Qualifiers:

ND - Not Detected at the Reporting Limit
J - Analyte detected below quantitation limits
B - Analyte detected in the associated Method Blank
HT - Sample received past holding time
* - Non-accredited parameter
RL - Reporting / Quantitation Limit for the analysis
S - Spike Recovery outside accepted recovery limits
R - RPD outside accepted recovery limits
E - Value above quantitation range
H - Holding time exceeded

STAT Analysis Corporation
2242 West Harrison St., Suite 200, Chicago, IL 60612-3766
Tel: (312) 733-0551 Fax: (312) 733-2386 STATinfo@STATAnalysis.com
Accreditation Numbers: IEPA ELAP 100445; ORELAP IL300001; AIHA 101160; NVLAP LabCode 101202

Date Reported: September 30, 2013
Date Printed: September 30, 2013

Client:	Terracon Consultants, Inc.	**Client Sample ID:**	B-1 (4-6)
Lab Order:	13060993	**Collection Date**	6/27/2013 1:40:00 PM
Project:	A2137008, 650 West 83rd, Chicago, IL	**Matrix:**	Soil
Lab ID:	13060993-006		

Analyses	Result	RL	Qualifier	Units	DF	Date Analyzed
Percent Moisture	**D2974**			Prep Date: **7/2/2013**		Analyst: **SDA**
Percent Moisture	14.1	0.2	*	wt%	1	7/2/2013

Qualifiers:

- ND - Not Detected at the Reporting Limit
- J - Analyte detected below quantitation limits
- B - Analyte detected in the associated Method Blank
- HT - Sample received past holding time
- * - Non-accredited parameter
- RL - Reporting / Quantitation Limit for the analysis
- S - Spike Recovery outside accepted recovery limits
- R - RPD outside accepted recovery limits
- E - Value above quantitation range
- H - Holding time exceeded

STAT Analysis Corporation
2242 West Harrison St., Suite 200, Chicago, IL 60612-3766
Tel: (312) 733-0551 Fax: (312) 733-2386 STATinfo@STATAnalysis.com
Accreditation Numbers: IEPA ELAP 100445; ORELAP IL300001; AIHA 101160; NVLAP LabCode 101202

Date Reported: September 30, 2013
Date Printed: September 30, 2013

Client: Terracon Consultants, Inc.
Lab Order: 13060993
Project: A2137008, 650 West 83rd, Chicago, IL
Lab ID: 13060993-007

Client Sample ID: B-24 (1-3)
Collection Date 6/27/2013 11:00:00 AM
Matrix: Soil

Analyses	Result	RL	Qualifier	Units	DF	Date Analyzed
Mercury	**SW7471A**			Prep Date: **7/5/2013**		Analyst: **LB**
Mercury	0.19	0.018		mg/Kg-dry	1	7/5/2013
Metals by ICP/MS	**SW6020 (SW3050B)**			Prep Date: **7/2/2013**		Analyst: **JG**
Arsenic	4.4	1		mg/Kg-dry	10	7/2/2013
Barium	73	1		mg/Kg-dry	10	7/2/2013
Cadmium	0.88	0.5		mg/Kg-dry	10	7/2/2013
Chromium	8.8	1		mg/Kg-dry	10	7/2/2013
Lead	160	0.5		mg/Kg-dry	10	7/2/2013
Selenium	ND	1		mg/Kg-dry	10	7/2/2013
Silver	ND	1		mg/Kg-dry	10	7/2/2013
Semivolatile Organic Compounds by GC/MS	**SW8270C (SW3550B)**			Prep Date: **7/1/2013**		Analyst: **DM**
Acenaphthene	ND	0.36		mg/Kg-dry	1	7/2/2013
Acenaphthylene	ND	0.36		mg/Kg-dry	1	7/2/2013
Anthracene	ND	0.36		mg/Kg-dry	1	7/2/2013
Benz(a)anthracene	0.37	0.36		mg/Kg-dry	1	7/2/2013
Benzo(a)pyrene	0.44	0.36		mg/Kg-dry	1	7/2/2013
Benzo(b)fluoranthene	0.41	0.36		mg/Kg-dry	1	7/2/2013
Benzo(g,h,i)perylene	ND	0.36		mg/Kg-dry	1	7/2/2013
Benzo(k)fluoranthene	ND	0.36		mg/Kg-dry	1	7/2/2013
Chrysene	0.44	0.36		mg/Kg-dry	1	7/2/2013
Dibenz(a,h)anthracene	ND	0.36		mg/Kg-dry	1	7/2/2013
Fluoranthene	0.71	0.36		mg/Kg-dry	1	7/2/2013
Fluorene	ND	0.36		mg/Kg-dry	1	7/2/2013
Indeno(1,2,3-cd)pyrene	ND	0.36		mg/Kg-dry	1	7/2/2013
Naphthalene	ND	0.36		mg/Kg-dry	1	7/2/2013
Phenanthrene	ND	0.36		mg/Kg-dry	1	7/2/2013
Pyrene	0.68	0.36		mg/Kg-dry	1	7/2/2013
BTEX by GC/MS	**SW5035/8260B**			Prep Date: **7/1/2013**		Analyst: **PS**
Benzene	ND	0.005		mg/Kg-dry	1	7/2/2013
Ethylbenzene	ND	0.005		mg/Kg-dry	1	7/2/2013
Toluene	ND	0.005		mg/Kg-dry	1	7/2/2013
Xylenes, Total	ND	0.015		mg/Kg-dry	1	7/2/2013
Percent Moisture	**D2974**			Prep Date: **7/2/2013**		Analyst: **SDA**
Percent Moisture	7.7	0.2	*	wt%	1	7/2/2013

Qualifiers:
ND - Not Detected at the Reporting Limit
J - Analyte detected below quantitation limits
B - Analyte detected in the associated Method Blank
HT - Sample received past holding time
* - Non-accredited parameter
RL - Reporting / Quantitation Limit for the analysis
S - Spike Recovery outside accepted recovery limits
R - RPD outside accepted recovery limits
E - Value above quantitation range
H - Holding time exceeded

STAT Analysis Corporation
2242 West Harrison St., Suite 200, Chicago, IL 60612-3766
Tel: (312) 733-0551 Fax: (312) 733-2386 STATinfo@STATAnalysis.com
Accreditation Numbers: IEPA ELAP 100445; ORELAP IL300001; AIHA 101160; NVLAP LabCode 101202

Date Reported: September 30, 2013
Date Printed: September 30, 2013

Client: Terracon Consultants, Inc.
Lab Order: 13060993
Project: A2137008, 650 West 83rd, Chicago, IL
Lab ID: 13060993-008

Client Sample ID: B-24 (6-8)
Collection Date 6/27/2013 11:10:00 AM
Matrix: Soil

Analyses	Result	RL	Qualifier	Units	DF	Date Analyzed
Mercury	**SW7471A**			Prep Date: **7/5/2013**		Analyst: **LB**
Mercury	0.051	0.026		mg/Kg-dry	1	7/5/2013
Metals by ICP/MS	**SW6020 (SW3050B)**			Prep Date: **7/2/2013**		Analyst: **JG**
Arsenic	7.5	1.5		mg/Kg-dry	10	7/3/2013
Barium	71	1.5		mg/Kg-dry	10	7/3/2013
Cadmium	ND	0.77		mg/Kg-dry	10	7/3/2013
Chromium	10	1.5		mg/Kg-dry	10	7/3/2013
Lead	38	0.77		mg/Kg-dry	10	7/3/2013
Selenium	1.7	1.5		mg/Kg-dry	10	7/3/2013
Silver	ND	1.5		mg/Kg-dry	10	7/3/2013
Semivolatile Organic Compounds by GC/MS	**SW8270C (SW3550B)**			Prep Date: **7/1/2013**		Analyst: **DM**
Acenaphthene	ND	0.052		mg/Kg-dry	1	7/2/2013
Acenaphthylene	ND	0.052		mg/Kg-dry	1	7/2/2013
Anthracene	ND	0.052		mg/Kg-dry	1	7/2/2013
Benz(a)anthracene	ND	0.052		mg/Kg-dry	1	7/2/2013
Benzo(a)pyrene	ND	0.052		mg/Kg-dry	1	7/2/2013
Benzo(b)fluoranthene	ND	0.052		mg/Kg-dry	1	7/2/2013
Benzo(g,h,i)perylene	ND	0.052		mg/Kg-dry	1	7/2/2013
Benzo(k)fluoranthene	ND	0.052		mg/Kg-dry	1	7/2/2013
Chrysene	ND	0.052		mg/Kg-dry	1	7/2/2013
Dibenz(a,h)anthracene	ND	0.052		mg/Kg-dry	1	7/2/2013
Fluoranthene	0.068	0.052		mg/Kg-dry	1	7/2/2013
Fluorene	ND	0.052		mg/Kg-dry	1	7/2/2013
Indeno(1,2,3-cd)pyrene	ND	0.052		mg/Kg-dry	1	7/2/2013
Naphthalene	ND	0.052		mg/Kg-dry	1	7/2/2013
Phenanthrene	0.07	0.052		mg/Kg-dry	1	7/2/2013
Pyrene	0.079	0.052		mg/Kg-dry	1	7/2/2013
BTEX by GC/MS	**SW5035/8260B**			Prep Date: **7/1/2013**		Analyst: **ERP**
Benzene	ND	0.0079		mg/Kg-dry	1	7/2/2013
Ethylbenzene	ND	0.0079		mg/Kg-dry	1	7/2/2013
Toluene	ND	0.0079		mg/Kg-dry	1	7/2/2013
Xylenes, Total	ND	0.024		mg/Kg-dry	1	7/2/2013
Percent Moisture	**D2974**			Prep Date: **7/2/2013**		Analyst: **SDA**
Percent Moisture	37.3	0.2	*	wt%	1	7/2/2013

Qualifiers:
ND - Not Detected at the Reporting Limit
J - Analyte detected below quantitation limits
B - Analyte detected in the associated Method Blank
HT - Sample received past holding time
* - Non-accredited parameter
RL - Reporting / Quantitation Limit for the analysis
S - Spike Recovery outside accepted recovery limits
R - RPD outside accepted recovery limits
E - Value above quantitation range
H - Holding time exceeded

STAT Analysis Corporation
2242 West Harrison St., Suite 200, Chicago, IL 60612-3766
Tel: (312) 733-0551 Fax: (312) 733-2386 STATinfo@STATAnalysis.com
Accreditation Numbers: IEPA ELAP 100445; ORELAP IL300001; AIHA 101160; NVLAP LabCode 101202

Date Reported: September 30, 2013
Date Printed: September 30, 2013

Client: Terracon Consultants, Inc.
Lab Order: 13060993
Project: A2137008, 650 West 83rd, Chicago, IL
Lab ID: 13060993-009

Client Sample ID: B-2 (1-3)
Collection Date 6/27/2013 1:20:00 PM
Matrix: Soil

Analyses	Result	RL	Qualifier	Units	DF	Date Analyzed
Mercury	**SW7471A**			Prep Date: **7/5/2013**		Analyst: **LB**
Mercury	1.8	0.096		mg/Kg-dry	5	7/5/2013
Metals by ICP/MS	**SW6020 (SW3050B)**			Prep Date: **7/2/2013**		Analyst: **JG**
Arsenic	8.4	1.1		mg/Kg-dry	10	7/3/2013
Barium	120	1.1		mg/Kg-dry	10	7/3/2013
Cadmium	1.3	0.56		mg/Kg-dry	10	7/3/2013
Chromium	12	1.1		mg/Kg-dry	10	7/3/2013
Lead	370	0.56		mg/Kg-dry	10	7/3/2013
Selenium	ND	1.1		mg/Kg-dry	10	7/3/2013
Silver	ND	1.1		mg/Kg-dry	10	7/3/2013
Semivolatile Organic Compounds by GC/MS	**SW8270C (SW3550B)**			Prep Date: **7/1/2013**		Analyst: **DM**
Acenaphthene	ND	0.037		mg/Kg-dry	1	7/2/2013
Acenaphthylene	0.043	0.037		mg/Kg-dry	1	7/2/2013
Anthracene	0.15	0.037		mg/Kg-dry	1	7/2/2013
Benz(a)anthracene	0.57	0.037		mg/Kg-dry	1	7/2/2013
Benzo(a)pyrene	0.6	0.037		mg/Kg-dry	1	7/2/2013
Benzo(b)fluoranthene	0.59	0.037		mg/Kg-dry	1	7/2/2013
Benzo(g,h,i)perylene	0.35	0.037		mg/Kg-dry	1	7/2/2013
Benzo(k)fluoranthene	0.42	0.037		mg/Kg-dry	1	7/2/2013
Chrysene	0.58	0.037		mg/Kg-dry	1	7/2/2013
Dibenz(a,h)anthracene	0.17	0.037		mg/Kg-dry	1	7/2/2013
Fluoranthene	1.1	0.037		mg/Kg-dry	1	7/2/2013
Fluorene	ND	0.037		mg/Kg-dry	1	7/2/2013
Indeno(1,2,3-cd)pyrene	0.3	0.037		mg/Kg-dry	1	7/2/2013
Naphthalene	ND	0.037		mg/Kg-dry	1	7/2/2013
Phenanthrene	0.55	0.037		mg/Kg-dry	1	7/2/2013
Pyrene	1	0.037		mg/Kg-dry	1	7/2/2013
BTEX by GC/MS	**SW5035/8260B**			Prep Date: **7/1/2013**		Analyst: **ERP**
Benzene	ND	0.0063		mg/Kg-dry	1	7/2/2013
Ethylbenzene	ND	0.0063		mg/Kg-dry	1	7/2/2013
Toluene	ND	0.0063		mg/Kg-dry	1	7/2/2013
Xylenes, Total	ND	0.019		mg/Kg-dry	1	7/2/2013
Percent Moisture	**D2974**			Prep Date: **7/2/2013**		Analyst: **SDA**
Percent Moisture	11.5	0.2	*	wt%	1	7/2/2013

Qualifiers:
ND - Not Detected at the Reporting Limit
J - Analyte detected below quantitation limits
B - Analyte detected in the associated Method Blank
HT - Sample received past holding time
* - Non-accredited parameter
RL - Reporting / Quantitation Limit for the analysis
S - Spike Recovery outside accepted recovery limits
R - RPD outside accepted recovery limits
E - Value above quantitation range
H - Holding time exceeded

STAT Analysis Corporation
2242 West Harrison St., Suite 200, Chicago, IL 60612-3766
Tel: (312) 733-0551 Fax: (312) 733-2386 STATinfo@STATAnalysis.com
Accreditation Numbers: IEPA ELAP 100445; ORELAP IL300001; AIHA 101160; NVLAP LabCode 101202

Date Reported: September 30, 2013
Date Printed: September 30, 2013

Client: Terracon Consultants, Inc.
Lab Order: 13060993
Project: A2137008, 650 West 83rd, Chicago, IL
Lab ID: 13060993-010

Client Sample ID: B-2 (6-8)
Collection Date 6/27/2013 1:25:00 PM
Matrix: Soil

Analyses	Result	RL	Qualifier	Units	DF	Date Analyzed
Mercury	**SW7471A**			Prep Date: **7/5/2013**		Analyst: **LB**
Mercury	ND	0.019		mg/Kg-dry	1	7/5/2013
Metals by ICP/MS	**SW6020 (SW3050B)**			Prep Date: **7/2/2013**		Analyst: **JG**
Arsenic	10	1.1		mg/Kg-dry	10	7/3/2013
Barium	74	1.1		mg/Kg-dry	10	7/3/2013
Cadmium	ND	0.56		mg/Kg-dry	10	7/3/2013
Chromium	12	1.1		mg/Kg-dry	10	7/3/2013
Lead	19	0.56		mg/Kg-dry	10	7/3/2013
Selenium	ND	1.1		mg/Kg-dry	10	7/3/2013
Silver	ND	1.1		mg/Kg-dry	10	7/3/2013
Semivolatile Organic Compounds by GC/MS	**SW8270C (SW3550B)**			Prep Date: **7/1/2013**		Analyst: **DM**
Acenaphthene	ND	0.04		mg/Kg-dry	1	7/2/2013
Acenaphthylene	ND	0.04		mg/Kg-dry	1	7/2/2013
Anthracene	ND	0.04		mg/Kg-dry	1	7/2/2013
Benz(a)anthracene	ND	0.04		mg/Kg-dry	1	7/2/2013
Benzo(a)pyrene	ND	0.04		mg/Kg-dry	1	7/2/2013
Benzo(b)fluoranthene	ND	0.04		mg/Kg-dry	1	7/2/2013
Benzo(g,h,i)perylene	ND	0.04		mg/Kg-dry	1	7/2/2013
Benzo(k)fluoranthene	ND	0.04		mg/Kg-dry	1	7/2/2013
Chrysene	ND	0.04		mg/Kg-dry	1	7/2/2013
Dibenz(a,h)anthracene	ND	0.04		mg/Kg-dry	1	7/2/2013
Fluoranthene	ND	0.04		mg/Kg-dry	1	7/2/2013
Fluorene	ND	0.04		mg/Kg-dry	1	7/2/2013
Indeno(1,2,3-cd)pyrene	ND	0.04		mg/Kg-dry	1	7/2/2013
Naphthalene	ND	0.04		mg/Kg-dry	1	7/2/2013
Phenanthrene	ND	0.04		mg/Kg-dry	1	7/2/2013
Pyrene	ND	0.04		mg/Kg-dry	1	7/2/2013
BTEX by GC/MS	**SW5035/8260B**			Prep Date: **7/1/2013**		Analyst: **ERP**
Benzene	ND	0.0049		mg/Kg-dry	1	7/2/2013
Ethylbenzene	ND	0.0049		mg/Kg-dry	1	7/2/2013
Toluene	ND	0.0049		mg/Kg-dry	1	7/2/2013
Xylenes, Total	ND	0.015		mg/Kg-dry	1	7/2/2013
Percent Moisture	**D2974**			Prep Date: **7/2/2013**		Analyst: **SDA**
Percent Moisture	18.4	0.2	*	wt%	1	7/2/2013

Qualifiers:
ND - Not Detected at the Reporting Limit
J - Analyte detected below quantitation limits
B - Analyte detected in the associated Method Blank
HT - Sample received past holding time
* - Non-accredited parameter
RL - Reporting / Quantitation Limit for the analysis
S - Spike Recovery outside accepted recovery limits
R - RPD outside accepted recovery limits
E - Value above quantitation range
H - Holding time exceeded

STAT Analysis Corporation
2242 West Harrison St., Suite 200, Chicago, IL 60612-3766
Tel: (312) 733-0551 Fax: (312) 733-2386 STATinfo@STATAnalysis.com
Accreditation Numbers: IEPA ELAP 100445; ORELAP IL300001; AIHA 101160; NVLAP LabCode 101202

Date Reported: September 30, 2013
Date Printed: September 30, 2013

Client: Terracon Consultants, Inc.
Lab Order: 13060993
Project: A2137008, 650 West 83rd, Chicago, IL
Lab ID: 13060993-013

Client Sample ID: B-3 (1-3)
Collection Date 6/27/2013 1:00:00 PM
Matrix: Soil

Analyses	Result	RL	Qualifier	Units	DF	Date Analyzed
Mercury	**SW7471A**			Prep Date: **7/5/2013**		Analyst: **LB**
Mercury	0.13	0.021		mg/Kg-dry	1	7/5/2013
Metals by ICP/MS	**SW6020 (SW3050B)**			Prep Date: **7/2/2013**		Analyst: **JG**
Arsenic	11	1.2		mg/Kg-dry	10	7/3/2013
Barium	390	1.2		mg/Kg-dry	10	7/3/2013
Cadmium	5	0.59		mg/Kg-dry	10	7/3/2013
Chromium	18	1.2		mg/Kg-dry	10	7/3/2013
Lead	550	0.59		mg/Kg-dry	10	7/3/2013
Selenium	1.5	1.2		mg/Kg-dry	10	7/3/2013
Silver	ND	1.2		mg/Kg-dry	10	7/3/2013
Semivolatile Organic Compounds by GC/MS	**SW8270C (SW3550B)**			Prep Date: **7/1/2013**		Analyst: **DM**
Acenaphthene	ND	0.41		mg/Kg-dry	1	7/2/2013
Acenaphthylene	ND	0.41		mg/Kg-dry	1	7/2/2013
Anthracene	0.59	0.41		mg/Kg-dry	1	7/2/2013
Benz(a)anthracene	2.2	0.41		mg/Kg-dry	1	7/2/2013
Benzo(a)pyrene	2.3	0.41		mg/Kg-dry	1	7/2/2013
Benzo(b)fluoranthene	2.3	0.41		mg/Kg-dry	1	7/2/2013
Benzo(g,h,i)perylene	1.4	0.41		mg/Kg-dry	1	7/2/2013
Benzo(k)fluoranthene	2.1	0.41		mg/Kg-dry	1	7/2/2013
Chrysene	2.6	0.41		mg/Kg-dry	1	7/2/2013
Dibenz(a,h)anthracene	0.8	0.41		mg/Kg-dry	1	7/2/2013
Fluoranthene	4.2	0.41		mg/Kg-dry	1	7/2/2013
Fluorene	ND	0.41		mg/Kg-dry	1	7/2/2013
Indeno(1,2,3-cd)pyrene	1.2	0.41		mg/Kg-dry	1	7/2/2013
Naphthalene	ND	0.41		mg/Kg-dry	1	7/2/2013
Phenanthrene	1.9	0.41		mg/Kg-dry	1	7/2/2013
Pyrene	3.8	0.41		mg/Kg-dry	1	7/2/2013
BTEX by GC/MS	**SW5035/8260B**			Prep Date: **7/1/2013**		Analyst: **ERP**
Benzene	ND	0.0074		mg/Kg-dry	1	7/2/2013
Ethylbenzene	ND	0.0074		mg/Kg-dry	1	7/2/2013
Toluene	ND	0.0074		mg/Kg-dry	1	7/2/2013
Xylenes, Total	ND	0.022		mg/Kg-dry	1	7/2/2013
Percent Moisture	**D2974**			Prep Date: **7/2/2013**		Analyst: **SDA**
Percent Moisture	20.0	0.2	*	wt%	1	7/2/2013

Qualifiers:
ND - Not Detected at the Reporting Limit
J - Analyte detected below quantitation limits
B - Analyte detected in the associated Method Blank
HT - Sample received past holding time
* - Non-accredited parameter
RL - Reporting / Quantitation Limit for the analysis
S - Spike Recovery outside accepted recovery limits
R - RPD outside accepted recovery limits
E - Value above quantitation range
H - Holding time exceeded

STAT Analysis Corporation
2242 West Harrison St., Suite 200, Chicago, IL 60612-3766
Tel: (312) 733-0551 Fax: (312) 733-2386 STATinfo@STATAnalysis.com
Accreditation Numbers: IEPA ELAP 100445; ORELAP IL300001; AIHA 101160; NVLAP LabCode 101202

Date Reported: September 30, 2013
Date Printed: September 30, 2013

Client: Terracon Consultants, Inc.
Lab Order: 13060993
Project: A2137008, 650 West 83rd, Chicago, IL
Lab ID: 13060993-014

Client Sample ID: B-3 (4-6)
Collection Date 6/27/2013 1:15:00 PM
Matrix: Soil

Analyses	Result	RL	Qualifier	Units	DF	Date Analyzed
Mercury	**SW7471A**			Prep Date: **7/5/2013**		Analyst: **LB**
Mercury	1	0.053		mg/Kg-dry	2	7/5/2013
Metals by ICP/MS	**SW6020 (SW3050B)**			Prep Date: **7/2/2013**		Analyst: **JG**
Arsenic	19	1.5		mg/Kg-dry	10	7/3/2013
Barium	140	1.5		mg/Kg-dry	10	7/3/2013
Cadmium	8.2	0.75		mg/Kg-dry	10	7/3/2013
Chromium	13	1.5		mg/Kg-dry	10	7/3/2013
Lead	1300	0.75		mg/Kg-dry	10	7/3/2013
Selenium	3	1.5		mg/Kg-dry	10	7/3/2013
Silver	ND	1.5		mg/Kg-dry	10	7/3/2013
TCLP Metals by ICP/MS	**SW1311/6020 (SW3005A)**			Prep Date: **9/24/2013**		Analyst: **JG**
Lead	170	1		mg/L	1000	9/25/2013
Semivolatile Organic Compounds by GC/MS	**SW8270C (SW3550B)**			Prep Date: **7/1/2013**		Analyst: **DM**
Acenaphthene	0.073	0.051		mg/Kg-dry	1	7/2/2013
Acenaphthylene	0.26	0.051		mg/Kg-dry	1	7/2/2013
Anthracene	0.84	0.051		mg/Kg-dry	1	7/2/2013
Benz(a)anthracene	3.3	0.051		mg/Kg-dry	1	7/2/2013
Benzo(a)pyrene	4.3	0.051		mg/Kg-dry	1	7/2/2013
Benzo(b)fluoranthene	2.3	0.051		mg/Kg-dry	1	7/2/2013
Benzo(g,h,i)perylene	2.4	0.051		mg/Kg-dry	1	7/2/2013
Benzo(k)fluoranthene	2.9	0.051		mg/Kg-dry	1	7/2/2013
Chrysene	3.8	0.051		mg/Kg-dry	1	7/2/2013
Dibenz(a,h)anthracene	0.78	0.051		mg/Kg-dry	1	7/2/2013
Fluoranthene	6.1	0.051		mg/Kg-dry	1	7/2/2013
Fluorene	0.15	0.051		mg/Kg-dry	1	7/2/2013
Indeno(1,2,3-cd)pyrene	1.7	0.051		mg/Kg-dry	1	7/2/2013
Naphthalene	0.087	0.051		mg/Kg-dry	1	7/2/2013
Phenanthrene	0.52	0.051		mg/Kg-dry	1	7/2/2013
Pyrene	9.1	0.26		mg/Kg-dry	5	7/3/2013
BTEX by GC/MS	**SW5035/8260B**			Prep Date: **7/1/2013**		Analyst: **ERP**
Benzene	ND	0.0085		mg/Kg-dry	1	7/2/2013
Ethylbenzene	ND	0.0085		mg/Kg-dry	1	7/2/2013
Toluene	ND	0.0085		mg/Kg-dry	1	7/2/2013
Xylenes, Total	ND	0.025		mg/Kg-dry	1	7/2/2013
Percent Moisture	**D2974**			Prep Date: **7/2/2013**		Analyst: **SDA**
Percent Moisture	36.4	0.2	*	wt%	1	7/2/2013

Qualifiers:
ND - Not Detected at the Reporting Limit
J - Analyte detected below quantitation limits
B - Analyte detected in the associated Method Blank
HT - Sample received past holding time
* - Non-accredited parameter
RL - Reporting / Quantitation Limit for the analysis
S - Spike Recovery outside accepted recovery limits
R - RPD outside accepted recovery limits
E - Value above quantitation range
H - Holding time exceeded

STAT Analysis Corporation
2242 West Harrison St., Suite 200, Chicago, IL 60612-3766
Tel: (312) 733-0551 Fax: (312) 733-2386 STATinfo@STATAnalysis.com
Accreditation Numbers: IEPA ELAP 100445; ORELAP IL300001; AIHA 101160; NVLAP LabCode 101202

Date Reported: September 30, 2013
Date Printed: September 30, 2013

Client: Terracon Consultants, Inc.
Lab Order: 13060993
Project: A2137008, 650 West 83rd, Chicago, IL
Lab ID: 13060993-015

Client Sample ID: B-14 (1-3)
Collection Date 6/27/2013 10:40:00 AM
Matrix: Soil

Analyses	Result	RL	Qualifier	Units	DF	Date Analyzed
Mercury	**SW7471A**			Prep Date: **7/5/2013**		Analyst: **LB**
Mercury	0.039	0.017		mg/Kg-dry	1	7/5/2013
Metals by ICP/MS	**SW6020 (SW3050B)**			Prep Date: **7/2/2013**		Analyst: **JG**
Arsenic	3.4	1.1		mg/Kg-dry	10	7/3/2013
Barium	21	1.1		mg/Kg-dry	10	7/3/2013
Cadmium	ND	0.53		mg/Kg-dry	10	7/3/2013
Chromium	4.5	1.1		mg/Kg-dry	10	7/3/2013
Lead	58	0.53		mg/Kg-dry	10	7/3/2013
Selenium	ND	1.1		mg/Kg-dry	10	7/3/2013
Silver	ND	1.1		mg/Kg-dry	10	7/3/2013
Semivolatile Organic Compounds by GC/MS	**SW8270C (SW3550B)**			Prep Date: **7/1/2013**		Analyst: **DM**
Acenaphthene	ND	0.036		mg/Kg-dry	1	7/2/2013
Acenaphthylene	ND	0.036		mg/Kg-dry	1	7/2/2013
Anthracene	0.1	0.036		mg/Kg-dry	1	7/2/2013
Benz(a)anthracene	0.42	0.036		mg/Kg-dry	1	7/2/2013
Benzo(a)pyrene	0.46	0.036		mg/Kg-dry	1	7/2/2013
Benzo(b)fluoranthene	0.44	0.036		mg/Kg-dry	1	7/2/2013
Benzo(g,h,i)perylene	0.26	0.036		mg/Kg-dry	1	7/2/2013
Benzo(k)fluoranthene	0.33	0.036		mg/Kg-dry	1	7/2/2013
Chrysene	0.45	0.036		mg/Kg-dry	1	7/2/2013
Dibenz(a,h)anthracene	0.14	0.036		mg/Kg-dry	1	7/2/2013
Fluoranthene	0.83	0.036		mg/Kg-dry	1	7/2/2013
Fluorene	ND	0.036		mg/Kg-dry	1	7/2/2013
Indeno(1,2,3-cd)pyrene	0.24	0.036		mg/Kg-dry	1	7/2/2013
Naphthalene	ND	0.036		mg/Kg-dry	1	7/2/2013
Phenanthrene	0.36	0.036		mg/Kg-dry	1	7/2/2013
Pyrene	0.84	0.036		mg/Kg-dry	1	7/2/2013
BTEX by GC/MS	**SW5035/8260B**			Prep Date: **7/1/2013**		Analyst: **ERP**
Benzene	0.0076	0.0063		mg/Kg-dry	1	7/2/2013
Ethylbenzene	ND	0.0063		mg/Kg-dry	1	7/2/2013
Toluene	ND	0.0063		mg/Kg-dry	1	7/2/2013
Xylenes, Total	ND	0.019		mg/Kg-dry	1	7/2/2013
Percent Moisture	**D2974**			Prep Date: **7/2/2013**		Analyst: **SDA**
Percent Moisture	8.3	0.2	*	wt%	1	7/2/2013

Qualifiers:
ND - Not Detected at the Reporting Limit
J - Analyte detected below quantitation limits
B - Analyte detected in the associated Method Blank
HT - Sample received past holding time
* - Non-accredited parameter
RL - Reporting / Quantitation Limit for the analysis
S - Spike Recovery outside accepted recovery limits
R - RPD outside accepted recovery limits
E - Value above quantitation range
H - Holding time exceeded

STAT Analysis Corporation
2242 West Harrison St., Suite 200, Chicago, IL 60612-3766
Tel: (312) 733-0551 Fax: (312) 733-2386 STATinfo@STATAnalysis.com
Accreditation Numbers: IEPA ELAP 100445; ORELAP IL300001; AIHA 101160; NVLAP LabCode 101202

Date Reported: September 30, 2013
Date Printed: September 30, 2013

Client: Terracon Consultants, Inc.
Lab Order: 13060993
Project: A2137008, 650 West 83rd, Chicago, IL
Lab ID: 13060993-016

Client Sample ID: B-14 (6-8)
Collection Date 6/27/2013 10:45:00 AM
Matrix: Soil

Analyses	Result	RL	Qualifier	Units	DF	Date Analyzed
Mercury	**SW7471A**			Prep Date: **7/5/2013**		Analyst: **LB**
Mercury	0.18	0.022		mg/Kg-dry	1	7/5/2013
Metals by ICP/MS	**SW6020 (SW3050B)**			Prep Date: **7/2/2013**		Analyst: **JG**
Arsenic	12	1.1		mg/Kg-dry	10	7/3/2013
Barium	140	1.1		mg/Kg-dry	10	7/3/2013
Cadmium	ND	0.54		mg/Kg-dry	10	7/3/2013
Chromium	17	1.1		mg/Kg-dry	10	7/3/2013
Lead	350	0.54		mg/Kg-dry	10	7/3/2013
Selenium	ND	1.1		mg/Kg-dry	10	7/3/2013
Silver	ND	1.1		mg/Kg-dry	10	7/3/2013
Semivolatile Organic Compounds by GC/MS	**SW8270C (SW3550B)**			Prep Date: **7/1/2013**		Analyst: **DM**
Acenaphthene	67	3.8		mg/Kg-dry	10	7/3/2013
Acenaphthylene	39	0.38		mg/Kg-dry	1	7/2/2013
Anthracene	160	3.8		mg/Kg-dry	10	7/3/2013
Benz(a)anthracene	200	3.8		mg/Kg-dry	10	7/3/2013
Benzo(a)pyrene	190	3.8		mg/Kg-dry	10	7/3/2013
Benzo(b)fluoranthene	160	3.8		mg/Kg-dry	10	7/3/2013
Benzo(g,h,i)perylene	85	3.8		mg/Kg-dry	10	7/3/2013
Benzo(k)fluoranthene	140	3.8		mg/Kg-dry	10	7/3/2013
Chrysene	200	3.8		mg/Kg-dry	10	7/3/2013
Dibenz(a,h)anthracene	44	0.38		mg/Kg-dry	1	7/2/2013
Fluoranthene	480	19		mg/Kg-dry	50	7/3/2013
Fluorene	140	3.8		mg/Kg-dry	10	7/3/2013
Indeno(1,2,3-cd)pyrene	79	3.8		mg/Kg-dry	10	7/3/2013
Naphthalene	170	3.8		mg/Kg-dry	10	7/3/2013
Phenanthrene	600	19		mg/Kg-dry	50	7/3/2013
Pyrene	420	3.8		mg/Kg-dry	10	7/3/2013
BTEX by GC/MS	**SW5035/8260B**			Prep Date: **7/1/2013**		Analyst: **ERP**
Benzene	ND	0.0048		mg/Kg-dry	1	7/2/2013
Ethylbenzene	ND	0.0048		mg/Kg-dry	1	7/2/2013
Toluene	ND	0.0048		mg/Kg-dry	1	7/2/2013
Xylenes, Total	ND	0.014		mg/Kg-dry	1	7/2/2013
Percent Moisture	**D2974**			Prep Date: **7/2/2013**		Analyst: **SDA**
Percent Moisture	13.1	0.2	*	wt%	1	7/2/2013

Qualifiers:
ND - Not Detected at the Reporting Limit
J - Analyte detected below quantitation limits
B - Analyte detected in the associated Method Blank
HT - Sample received past holding time
* - Non-accredited parameter
RL - Reporting / Quantitation Limit for the analysis
S - Spike Recovery outside accepted recovery limits
R - RPD outside accepted recovery limits
E - Value above quantitation range
H - Holding time exceeded

STAT Analysis Corporation
2242 West Harrison St., Suite 200, Chicago, IL 60612-3766
Tel: (312) 733-0551 Fax: (312) 733-2386 STATinfo@STATAnalysis.com
Accreditation Numbers: IEPA ELAP 100445; ORELAP IL300001; AIHA 101160; NVLAP LabCode 101202

Date Reported: September 30, 2013
Date Printed: September 30, 2013

Client: Terracon Consultants, Inc.
Lab Order: 13060993
Project: A2137008, 650 West 83rd, Chicago, IL
Lab ID: 13060993-017

Client Sample ID: B-15 (1-3)
Collection Date 6/27/2013 10:20:00 AM
Matrix: Soil

Analyses	Result	RL	Qualifier	Units	DF	Date Analyzed
Mercury	**SW7471A**			Prep Date: **7/5/2013**		Analyst: **LB**
Mercury	0.054	0.018		mg/Kg-dry	1	7/5/2013
Metals by ICP/MS	**SW6020 (SW3050B)**			Prep Date: **7/2/2013**		Analyst: **JG**
Arsenic	4	1.1		mg/Kg-dry	10	7/3/2013
Barium	180	1.1		mg/Kg-dry	10	7/3/2013
Cadmium	ND	0.54		mg/Kg-dry	10	7/3/2013
Chromium	14	1.1		mg/Kg-dry	10	7/3/2013
Lead	240	0.54		mg/Kg-dry	10	7/3/2013
Selenium	ND	1.1		mg/Kg-dry	10	7/3/2013
Silver	ND	1.1		mg/Kg-dry	10	7/3/2013
Semivolatile Organic Compounds by GC/MS	**SW8270C (SW3550B)**			Prep Date: **7/1/2013**		Analyst: **DM**
Acenaphthene	0.72	0.37		mg/Kg-dry	1	7/2/2013
Acenaphthylene	0.41	0.37		mg/Kg-dry	1	7/2/2013
Anthracene	1.7	0.37		mg/Kg-dry	1	7/2/2013
Benz(a)anthracene	7.1	0.37		mg/Kg-dry	1	7/2/2013
Benzo(a)pyrene	8.4	0.37		mg/Kg-dry	1	7/2/2013
Benzo(b)fluoranthene	8.7	0.37		mg/Kg-dry	1	7/2/2013
Benzo(g,h,i)perylene	5.3	0.37		mg/Kg-dry	1	7/2/2013
Benzo(k)fluoranthene	6.1	0.37		mg/Kg-dry	1	7/2/2013
Chrysene	8.5	0.37		mg/Kg-dry	1	7/2/2013
Dibenz(a,h)anthracene	2.4	0.37		mg/Kg-dry	1	7/2/2013
Fluoranthene	19	0.37		mg/Kg-dry	1	7/2/2013
Fluorene	0.71	0.37		mg/Kg-dry	1	7/2/2013
Indeno(1,2,3-cd)pyrene	4.4	0.37		mg/Kg-dry	1	7/2/2013
Naphthalene	ND	0.37		mg/Kg-dry	1	7/2/2013
Phenanthrene	9.1	0.37		mg/Kg-dry	1	7/2/2013
Pyrene	15	0.37		mg/Kg-dry	1	7/2/2013
BTEX by GC/MS	**SW5035/8260B**			Prep Date: **7/1/2013**		Analyst: **ERP**
Benzene	ND	0.0052		mg/Kg-dry	1	7/2/2013
Ethylbenzene	ND	0.0052		mg/Kg-dry	1	7/2/2013
Toluene	ND	0.0052		mg/Kg-dry	1	7/2/2013
Xylenes, Total	ND	0.016		mg/Kg-dry	1	7/2/2013
Percent Moisture	**D2974**			Prep Date: **7/2/2013**		Analyst: **SDA**
Percent Moisture	11.1	0.2	*	wt%	1	7/2/2013

Qualifiers:
ND - Not Detected at the Reporting Limit
J - Analyte detected below quantitation limits
B - Analyte detected in the associated Method Blank
HT - Sample received past holding time
* - Non-accredited parameter
RL - Reporting / Quantitation Limit for the analysis
S - Spike Recovery outside accepted recovery limits
R - RPD outside accepted recovery limits
E - Value above quantitation range
H - Holding time exceeded

STAT Analysis Corporation
2242 West Harrison St., Suite 200, Chicago, IL 60612-3766
Tel: (312) 733-0551 Fax: (312) 733-2386 STATinfo@STATAnalysis.com
Accreditation Numbers: IEPA ELAP 100445; ORELAP IL300001; AIHA 101160; NVLAP LabCode 101202

Date Reported: September 30, 2013
Date Printed: September 30, 2013

Client: Terracon Consultants, Inc.
Lab Order: 13060993
Project: A2137008, 650 West 83rd, Chicago, IL
Lab ID: 13060993-018

Client Sample ID: B-15 (4-6)
Collection Date 6/27/2013 10:30:00 AM
Matrix: Soil

Analyses	Result	RL	Qualifier	Units	DF	Date Analyzed
Mercury	**SW7471A**			Prep Date: **7/5/2013**		Analyst: **LB**
Mercury	ND	0.017		mg/Kg-dry	1	7/5/2013
Metals by ICP/MS	**SW6020 (SW3050B)**			Prep Date: **7/2/2013**		Analyst: **JG**
Arsenic	4.4	1		mg/Kg-dry	10	7/3/2013
Barium	130	1		mg/Kg-dry	10	7/3/2013
Cadmium	ND	0.52		mg/Kg-dry	10	7/3/2013
Chromium	10	1		mg/Kg-dry	10	7/3/2013
Lead	13	0.52		mg/Kg-dry	10	7/3/2013
Selenium	ND	1		mg/Kg-dry	10	7/3/2013
Silver	ND	1		mg/Kg-dry	10	7/3/2013
Semivolatile Organic Compounds by GC/MS	**SW8270C (SW3550B)**			Prep Date: **7/1/2013**		Analyst: **DM**
Acenaphthene	0.35	0.037		mg/Kg-dry	1	7/2/2013
Acenaphthylene	ND	0.037		mg/Kg-dry	1	7/2/2013
Anthracene	0.088	0.037		mg/Kg-dry	1	7/2/2013
Benz(a)anthracene	0.22	0.037		mg/Kg-dry	1	7/2/2013
Benzo(a)pyrene	0.21	0.037		mg/Kg-dry	1	7/2/2013
Benzo(b)fluoranthene	0.23	0.037		mg/Kg-dry	1	7/2/2013
Benzo(g,h,i)perylene	0.11	0.037		mg/Kg-dry	1	7/2/2013
Benzo(k)fluoranthene	0.16	0.037		mg/Kg-dry	1	7/2/2013
Chrysene	0.25	0.037		mg/Kg-dry	1	7/2/2013
Dibenz(a,h)anthracene	0.069	0.037		mg/Kg-dry	1	7/2/2013
Fluoranthene	0.62	0.037		mg/Kg-dry	1	7/2/2013
Fluorene	0.061	0.037		mg/Kg-dry	1	7/2/2013
Indeno(1,2,3-cd)pyrene	0.095	0.037		mg/Kg-dry	1	7/2/2013
Naphthalene	ND	0.037		mg/Kg-dry	1	7/2/2013
Phenanthrene	0.32	0.037		mg/Kg-dry	1	7/2/2013
Pyrene	0.47	0.037		mg/Kg-dry	1	7/2/2013
Volatile Organic Compounds by GC/MS	**SW5035/8260B**			Prep Date: **7/1/2013**		Analyst: **ERP**
Acetone	0.18	0.074		mg/Kg-dry	1	7/2/2013
Benzene	ND	0.0049		mg/Kg-dry	1	7/2/2013
Bromodichloromethane	ND	0.0049		mg/Kg-dry	1	7/2/2013
Bromoform	ND	0.0049		mg/Kg-dry	1	7/2/2013
Bromomethane	ND	0.0099		mg/Kg-dry	1	7/2/2013
2-Butanone	ND	0.074		mg/Kg-dry	1	7/2/2013
Carbon disulfide	ND	0.049		mg/Kg-dry	1	7/2/2013
Carbon tetrachloride	ND	0.0049		mg/Kg-dry	1	7/2/2013
Chlorobenzene	ND	0.0049		mg/Kg-dry	1	7/2/2013
Chloroethane	ND	0.0099		mg/Kg-dry	1	7/2/2013

Qualifiers:
ND - Not Detected at the Reporting Limit
J - Analyte detected below quantitation limits
B - Analyte detected in the associated Method Blank
HT - Sample received past holding time
* - Non-accredited parameter
RL - Reporting / Quantitation Limit for the analysis
S - Spike Recovery outside accepted recovery limits
R - RPD outside accepted recovery limits
E - Value above quantitation range
H - Holding time exceeded

STAT Analysis Corporation
2242 West Harrison St., Suite 200, Chicago, IL 60612-3766
Tel: (312) 733-0551 Fax: (312) 733-2386 STATinfo@STATAnalysis.com
Accreditation Numbers: IEPA ELAP 100445; ORELAP IL300001; AIHA 101160; NVLAP LabCode 101202

Date Reported: September 30, 2013
Date Printed: September 30, 2013

Client: Terracon Consultants, Inc.
Lab Order: 13060993
Project: A2137008, 650 West 83rd, Chicago, IL
Lab ID: 13060993-018

Client Sample ID: B-15 (4-6)
Collection Date 6/27/2013 10:30:00 AM
Matrix: Soil

Analyses	Result	RL	Qualifier	Units	DF	Date Analyzed
Volatile Organic Compounds by GC/MS	**SW5035/8260B**			Prep Date: **7/1/2013**		Analyst: **ERP**
Chloroform	ND	0.0049		mg/Kg-dry	1	7/2/2013
Chloromethane	ND	0.0099		mg/Kg-dry	1	7/2/2013
Dibromochloromethane	ND	0.0049		mg/Kg-dry	1	7/2/2013
1,1-Dichloroethane	ND	0.0049		mg/Kg-dry	1	7/2/2013
1,2-Dichloroethane	ND	0.0049		mg/Kg-dry	1	7/2/2013
1,1-Dichloroethene	ND	0.0049		mg/Kg-dry	1	7/2/2013
cis-1,2-Dichloroethene	ND	0.0049		mg/Kg-dry	1	7/2/2013
trans-1,2-Dichloroethene	ND	0.0049		mg/Kg-dry	1	7/2/2013
1,2-Dichloropropane	ND	0.0049		mg/Kg-dry	1	7/2/2013
cis-1,3-Dichloropropene	ND	0.002		mg/Kg-dry	1	7/2/2013
trans-1,3-Dichloropropene	ND	0.002		mg/Kg-dry	1	7/2/2013
Ethylbenzene	ND	0.0049		mg/Kg-dry	1	7/2/2013
2-Hexanone	ND	0.02		mg/Kg-dry	1	7/2/2013
4-Methyl-2-pentanone	ND	0.02		mg/Kg-dry	1	7/2/2013
Methylene chloride	ND	0.0099		mg/Kg-dry	1	7/2/2013
Methyl tert-butyl ether	ND	0.0049		mg/Kg-dry	1	7/2/2013
Styrene	ND	0.0049		mg/Kg-dry	1	7/2/2013
1,1,2,2-Tetrachloroethane	ND	0.0049		mg/Kg-dry	1	7/2/2013
Tetrachloroethene	ND	0.0049		mg/Kg-dry	1	7/2/2013
Toluene	ND	0.0049		mg/Kg-dry	1	7/2/2013
1,1,1-Trichloroethane	ND	0.0049		mg/Kg-dry	1	7/2/2013
1,1,2-Trichloroethane	ND	0.0049		mg/Kg-dry	1	7/2/2013
Trichloroethene	ND	0.0049		mg/Kg-dry	1	7/2/2013
Vinyl chloride	ND	0.0049		mg/Kg-dry	1	7/2/2013
Xylenes, Total	ND	0.015		mg/Kg-dry	1	7/2/2013
pH (25 °C)	**SW9045C**			Prep Date: **7/2/2013**		Analyst: **RW**
pH	8.5			pH Units	1	7/2/2013
Percent Moisture	**D2974**			Prep Date: **7/2/2013**		Analyst: **SDA**
Percent Moisture	10.2	0.2	*	wt%	1	7/2/2013

Qualifiers:
ND - Not Detected at the Reporting Limit
J - Analyte detected below quantitation limits
B - Analyte detected in the associated Method Blank
HT - Sample received past holding time
* - Non-accredited parameter
RL - Reporting / Quantitation Limit for the analysis
S - Spike Recovery outside accepted recovery limits
R - RPD outside accepted recovery limits
E - Value above quantitation range
H - Holding time exceeded

STAT Analysis Corporation
2242 West Harrison St., Suite 200, Chicago, IL 60612-3766
Tel: (312) 733-0551 Fax: (312) 733-2386 STATinfo@STATAnalysis.com
Accreditation Numbers: IEPA ELAP 100445; ORELAP IL300001; AIHA 101160; NVLAP LabCode 101202

Date Reported: September 30, 2013
Date Printed: September 30, 2013

Client: Terracon Consultants, Inc.
Lab Order: 13060993
Project: A2137008, 650 West 83rd, Chicago, IL
Lab ID: 13060993-019

Client Sample ID: B-31 (1-3)
Collection Date 6/27/2013 9:45:00 AM
Matrix: Soil

Analyses	Result	RL	Qualifier	Units	DF	Date Analyzed
Mercury	**SW7471A**			Prep Date: **7/5/2013**		Analyst: **LB**
Mercury	0.12	0.021		mg/Kg-dry	1	7/5/2013
Metals by ICP/MS	**SW6020 (SW3050B)**			Prep Date: **7/2/2013**		Analyst: **JG**
Arsenic	7.1	1		mg/Kg-dry	10	7/3/2013
Barium	100	1		mg/Kg-dry	10	7/3/2013
Cadmium	1	0.52		mg/Kg-dry	10	7/3/2013
Chromium	12	1		mg/Kg-dry	10	7/3/2013
Lead	370	0.52		mg/Kg-dry	10	7/3/2013
Selenium	ND	1		mg/Kg-dry	10	7/3/2013
Silver	ND	1		mg/Kg-dry	10	7/3/2013
Semivolatile Organic Compounds by GC/MS	**SW8270C (SW3550B)**			Prep Date: **7/1/2013**		Analyst: **DM**
Acenaphthene	0.28	0.036		mg/Kg-dry	1	7/2/2013
Acenaphthylene	0.24	0.036		mg/Kg-dry	1	7/2/2013
Anthracene	1.1	0.036		mg/Kg-dry	1	7/2/2013
Benz(a)anthracene	2.8	0.036		mg/Kg-dry	1	7/2/2013
Benzo(a)pyrene	2.8	0.036		mg/Kg-dry	1	7/2/2013
Benzo(b)fluoranthene	2.4	0.036		mg/Kg-dry	1	7/2/2013
Benzo(g,h,i)perylene	1.6	0.036		mg/Kg-dry	1	7/2/2013
Benzo(k)fluoranthene	2.3	0.036		mg/Kg-dry	1	7/2/2013
Chrysene	2.9	0.036		mg/Kg-dry	1	7/2/2013
Dibenz(a,h)anthracene	0.76	0.036		mg/Kg-dry	1	7/2/2013
Fluoranthene	6.1	0.18		mg/Kg-dry	5	7/3/2013
Fluorene	0.36	0.036		mg/Kg-dry	1	7/2/2013
Indeno(1,2,3-cd)pyrene	1.4	0.036		mg/Kg-dry	1	7/2/2013
Naphthalene	0.078	0.036		mg/Kg-dry	1	7/2/2013
Phenanthrene	4.1	0.036		mg/Kg-dry	1	7/2/2013
Pyrene	5.3	0.18		mg/Kg-dry	5	7/3/2013
BTEX by GC/MS	**SW5035/8260B**			Prep Date: **7/1/2013**		Analyst: **PS**
Benzene	ND	0.0045		mg/Kg-dry	1	7/2/2013
Ethylbenzene	ND	0.0045		mg/Kg-dry	1	7/2/2013
Toluene	ND	0.0045		mg/Kg-dry	1	7/2/2013
Xylenes, Total	ND	0.013		mg/Kg-dry	1	7/2/2013
pH (25 °C)	**SW9045C**			Prep Date: **7/2/2013**		Analyst: **RW**
pH	8.3			pH Units	1	7/2/2013
Percent Moisture	**D2974**			Prep Date: **7/2/2013**		Analyst: **SDA**
Percent Moisture	9.1	0.2	*	wt%	1	7/2/2013

Qualifiers:
ND - Not Detected at the Reporting Limit
J - Analyte detected below quantitation limits
B - Analyte detected in the associated Method Blank
HT - Sample received past holding time
* - Non-accredited parameter
RL - Reporting / Quantitation Limit for the analysis
S - Spike Recovery outside accepted recovery limits
R - RPD outside accepted recovery limits
E - Value above quantitation range
H - Holding time exceeded

STAT Analysis Corporation
2242 West Harrison St., Suite 200, Chicago, IL 60612-3766
Tel: (312) 733-0551 Fax: (312) 733-2386 STATinfo@STATAnalysis.com
Accreditation Numbers: IEPA ELAP 100445; ORELAP IL300001; AIHA 101160; NVLAP LabCode 101202

Date Reported: September 30, 2013
Date Printed: September 30, 2013

Client: Terracon Consultants, Inc.
Lab Order: 13060993
Project: A2137008, 650 West 83rd, Chicago, IL
Lab ID: 13060993-020

Client Sample ID: B-31 (6-8)
Collection Date 6/27/2013 10:00:00 AM
Matrix: Soil

Analyses	Result	RL	Qualifier	Units	DF	Date Analyzed
Mercury	**SW7471A**			Prep Date: **7/5/2013**		Analyst: **LB**
Mercury	0.025	0.025		mg/Kg-dry	1	7/5/2013
Metals by ICP/MS	**SW6020 (SW3050B)**			Prep Date: **7/2/2013**		Analyst: **JG**
Arsenic	6.2	1.3		mg/Kg-dry	10	7/3/2013
Barium	50	1.3		mg/Kg-dry	10	7/3/2013
Cadmium	0.65	0.64		mg/Kg-dry	10	7/3/2013
Chromium	13	1.3		mg/Kg-dry	10	7/3/2013
Lead	24	0.64		mg/Kg-dry	10	7/3/2013
Selenium	ND	1.3		mg/Kg-dry	10	7/3/2013
Silver	ND	1.3		mg/Kg-dry	10	7/3/2013
Semivolatile Organic Compounds by GC/MS	**SW8270C (SW3550B)**			Prep Date: **7/1/2013**		Analyst: **DM**
Acenaphthene	ND	0.045		mg/Kg-dry	1	7/2/2013
Acenaphthylene	ND	0.045		mg/Kg-dry	1	7/2/2013
Anthracene	ND	0.045		mg/Kg-dry	1	7/2/2013
Benz(a)anthracene	ND	0.045		mg/Kg-dry	1	7/2/2013
Benzo(a)pyrene	ND	0.045		mg/Kg-dry	1	7/2/2013
Benzo(b)fluoranthene	ND	0.045		mg/Kg-dry	1	7/2/2013
Benzo(g,h,i)perylene	ND	0.045		mg/Kg-dry	1	7/2/2013
Benzo(k)fluoranthene	ND	0.045		mg/Kg-dry	1	7/2/2013
Chrysene	ND	0.045		mg/Kg-dry	1	7/2/2013
Dibenz(a,h)anthracene	ND	0.045		mg/Kg-dry	1	7/2/2013
Fluoranthene	0.061	0.045		mg/Kg-dry	1	7/2/2013
Fluorene	ND	0.045		mg/Kg-dry	1	7/2/2013
Indeno(1,2,3-cd)pyrene	ND	0.045		mg/Kg-dry	1	7/2/2013
Naphthalene	ND	0.045		mg/Kg-dry	1	7/2/2013
Phenanthrene	0.053	0.045		mg/Kg-dry	1	7/2/2013
Pyrene	0.047	0.045		mg/Kg-dry	1	7/2/2013
BTEX by GC/MS	**SW5035/8260B**			Prep Date: **7/1/2013**		Analyst: **PS**
Benzene	ND	0.0051		mg/Kg-dry	1	7/2/2013
Ethylbenzene	ND	0.0051		mg/Kg-dry	1	7/2/2013
Toluene	ND	0.0051		mg/Kg-dry	1	7/2/2013
Xylenes, Total	ND	0.015		mg/Kg-dry	1	7/2/2013
pH (25 °C)	**SW9045C**			Prep Date: **7/2/2013**		Analyst: **RW**
pH	7.5			pH Units	1	7/2/2013
Percent Moisture	**D2974**			Prep Date: **7/2/2013**		Analyst: **SDA**
Percent Moisture	26.8	0.2	*	wt%	1	7/2/2013

Qualifiers:
ND - Not Detected at the Reporting Limit
J - Analyte detected below quantitation limits
B - Analyte detected in the associated Method Blank
HT - Sample received past holding time
* - Non-accredited parameter
RL - Reporting / Quantitation Limit for the analysis
S - Spike Recovery outside accepted recovery limits
R - RPD outside accepted recovery limits
E - Value above quantitation range
H - Holding time exceeded

STAT Analysis Corporation
2242 West Harrison St., Suite 200, Chicago, IL 60612-3766
Tel: (312) 733-0551 Fax: (312) 733-2386 STATinfo@STATAnalysis.com
Accreditation Numbers: IEPA ELAP 100445; ORELAP IL300001; AIHA 101160; NVLAP LabCode 101202

Date Reported: September 30, 2013
Date Printed: September 30, 2013

Client: Terracon Consultants, Inc.
Lab Order: 13060993
Project: A2137008, 650 West 83rd, Chicago, IL
Lab ID: 13060993-021

Client Sample ID: B-16 (1-3)
Collection Date 6/27/2013 9:15:00 AM
Matrix: Soil

Analyses	Result	RL	Qualifier	Units	DF	Date Analyzed
PCBs	**SW8082 (SW3550B)**			Prep Date: **7/1/2013**		Analyst: **GVC**
Aroclor 1016	ND	0.092		mg/Kg-dry	1	7/2/2013
Aroclor 1221	ND	0.092		mg/Kg-dry	1	7/2/2013
Aroclor 1232	ND	0.092		mg/Kg-dry	1	7/2/2013
Aroclor 1242	ND	0.092		mg/Kg-dry	1	7/2/2013
Aroclor 1248	ND	0.092		mg/Kg-dry	1	7/2/2013
Aroclor 1254	ND	0.092		mg/Kg-dry	1	7/2/2013
Aroclor 1260	ND	0.092		mg/Kg-dry	1	7/2/2013
Pesticides	**SW8081 (SW3550B)**			Prep Date: **7/1/2013**		Analyst: **GVC**
4,4'-DDD	ND	0.0018		mg/Kg-dry	1	7/2/2013
4,4'-DDE	ND	0.0018		mg/Kg-dry	1	7/2/2013
4,4'-DDT	ND	0.0018		mg/Kg-dry	1	7/2/2013
Aldrin	ND	0.0018		mg/Kg-dry	1	7/2/2013
alpha-BHC	ND	0.0018		mg/Kg-dry	1	7/2/2013
alpha-Chlordane	ND	0.0018		mg/Kg-dry	1	7/2/2013
beta-BHC	ND	0.0018		mg/Kg-dry	1	7/2/2013
Chlordane	ND	0.018		mg/Kg-dry	1	7/2/2013
delta-BHC	ND	0.0018		mg/Kg-dry	1	7/2/2013
Dieldrin	ND	0.0018		mg/Kg-dry	1	7/2/2013
Endosulfan I	ND	0.0018		mg/Kg-dry	1	7/2/2013
Endosulfan II	ND	0.0018		mg/Kg-dry	1	7/2/2013
Endosulfan sulfate	ND	0.0018		mg/Kg-dry	1	7/2/2013
Endrin	ND	0.0018		mg/Kg-dry	1	7/2/2013
Endrin aldehyde	ND	0.0018		mg/Kg-dry	1	7/2/2013
Endrin ketone	ND	0.0018		mg/Kg-dry	1	7/2/2013
gamma-BHC	ND	0.0018		mg/Kg-dry	1	7/2/2013
gamma-Chlordane	ND	0.0018		mg/Kg-dry	1	7/2/2013
Heptachlor	ND	0.0018		mg/Kg-dry	1	7/2/2013
Heptachlor epoxide	ND	0.0018		mg/Kg-dry	1	7/2/2013
Methoxychlor	ND	0.0018		mg/Kg-dry	1	7/2/2013
Toxaphene	ND	0.038		mg/Kg-dry	1	7/2/2013
Mercury	**SW7471A**			Prep Date: **7/5/2013**		Analyst: **LB**
Mercury	0.024	0.021		mg/Kg-dry	1	7/5/2013
Metals by ICP/MS	**SW6020 (SW3050B)**			Prep Date: **7/3/2013**		Analyst: **JG**
Aluminum	13000	200		mg/Kg-dry	100	7/3/2013
Antimony	ND	2		mg/Kg-dry	10	7/3/2013
Arsenic	7.8	1		mg/Kg-dry	10	7/3/2013
Barium	92	1		mg/Kg-dry	10	7/3/2013

Qualifiers:
ND - Not Detected at the Reporting Limit
J - Analyte detected below quantitation limits
B - Analyte detected in the associated Method Blank
HT - Sample received past holding time
* - Non-accredited parameter
RL - Reporting / Quantitation Limit for the analysis
S - Spike Recovery outside accepted recovery limits
R - RPD outside accepted recovery limits
E - Value above quantitation range
H - Holding time exceeded

STAT Analysis Corporation
2242 West Harrison St., Suite 200, Chicago, IL 60612-3766
Tel: (312) 733-0551 Fax: (312) 733-2386 STATinfo@STATAnalysis.com
Accreditation Numbers: IEPA ELAP 100445; ORELAP IL300001; AIHA 101160; NVLAP LabCode 101202

Date Reported: September 30, 2013
Date Printed: September 30, 2013

Client: Terracon Consultants, Inc.
Lab Order: 13060993
Project: A2137008, 650 West 83rd, Chicago, IL
Lab ID: 13060993-021

Client Sample ID: B-16 (1-3)
Collection Date 6/27/2013 9:15:00 AM
Matrix: Soil

Analyses	Result	RL	Qualifier	Units	DF	Date Analyzed
Metals by ICP/MS		**SW6020 (SW3050B)**		Prep Date: **7/3/2013**		Analyst: **JG**
Beryllium	0.86	0.5		mg/Kg-dry	10	7/3/2013
Cadmium	ND	0.5		mg/Kg-dry	10	7/3/2013
Calcium	48000	60		mg/Kg-dry	10	7/3/2013
Chromium	26	1		mg/Kg-dry	10	7/3/2013
Cobalt	14	1		mg/Kg-dry	10	7/3/2013
Copper	41	2.5		mg/Kg-dry	10	7/3/2013
Iron	29000	300		mg/Kg-dry	100	7/3/2013
Lead	120	5		mg/Kg-dry	100	7/3/2013
Magnesium	23000	30		mg/Kg-dry	10	7/3/2013
Manganese	460	1		mg/Kg-dry	10	7/3/2013
Nickel	36	1		mg/Kg-dry	10	7/3/2013
Potassium	2100	30		mg/Kg-dry	10	7/3/2013
Selenium	ND	1		mg/Kg-dry	10	7/3/2013
Silver	ND	1		mg/Kg-dry	10	7/3/2013
Sodium	670	60		mg/Kg-dry	10	7/3/2013
Thallium	ND	1		mg/Kg-dry	10	7/3/2013
Vanadium	24	1		mg/Kg-dry	10	7/3/2013
Zinc	78	5		mg/Kg-dry	10	7/3/2013
Semivolatile Organic Compounds by GC/MS		**SW8270C (SW3550B)**		Prep Date: **7/1/2013**		Analyst: **DM**
Acenaphthene	ND	0.038		mg/Kg-dry	1	7/2/2013
Acenaphthylene	ND	0.038		mg/Kg-dry	1	7/2/2013
Aniline	ND	0.38		mg/Kg-dry	1	7/2/2013
Anthracene	0.072	0.038		mg/Kg-dry	1	7/2/2013
Benz(a)anthracene	0.13	0.038		mg/Kg-dry	1	7/2/2013
Benzidine	ND	0.38		mg/Kg-dry	1	7/2/2013
Benzo(a)pyrene	0.11	0.038		mg/Kg-dry	1	7/2/2013
Benzo(b)fluoranthene	0.09	0.038		mg/Kg-dry	1	7/2/2013
Benzo(g,h,i)perylene	0.062	0.038		mg/Kg-dry	1	7/2/2013
Benzo(k)fluoranthene	0.096	0.038		mg/Kg-dry	1	7/2/2013
Benzoic acid	ND	0.96		mg/Kg-dry	1	7/2/2013
Benzyl alcohol	ND	0.2		mg/Kg-dry	1	7/2/2013
Bis(2-chloroethoxy)methane	ND	0.2		mg/Kg-dry	1	7/2/2013
Bis(2-chloroethyl)ether	ND	0.2		mg/Kg-dry	1	7/2/2013
Bis(2-ethylhexyl)phthalate	ND	0.96		mg/Kg-dry	1	7/2/2013
4-Bromophenyl phenyl ether	ND	0.2		mg/Kg-dry	1	7/2/2013
Butyl benzyl phthalate	ND	0.2		mg/Kg-dry	1	7/2/2013
Carbazole	ND	0.2		mg/Kg-dry	1	7/2/2013
4-Chloroaniline	ND	0.2		mg/Kg-dry	1	7/2/2013

Qualifiers:
ND - Not Detected at the Reporting Limit
J - Analyte detected below quantitation limits
B - Analyte detected in the associated Method Blank
HT - Sample received past holding time
* - Non-accredited parameter
RL - Reporting / Quantitation Limit for the analysis
S - Spike Recovery outside accepted recovery limits
R - RPD outside accepted recovery limits
E - Value above quantitation range
H - Holding time exceeded

STAT Analysis Corporation
2242 West Harrison St., Suite 200, Chicago, IL 60612-3766
Tel: (312) 733-0551 Fax: (312) 733-2386 STATinfo@STATAnalysis.com
Accreditation Numbers: IEPA ELAP 100445; ORELAP IL300001; AIHA 101160; NVLAP LabCode 101202

Date Reported: September 30, 2013
Date Printed: September 30, 2013

Client: Terracon Consultants, Inc.
Lab Order: 13060993
Project: A2137008, 650 West 83rd, Chicago, IL
Lab ID: 13060993-021

Client Sample ID: B-16 (1-3)
Collection Date 6/27/2013 9:15:00 AM
Matrix: Soil

Analyses	Result	RL	Qualifier	Units	DF	Date Analyzed
Semivolatile Organic Compounds by GC/MS	**SW8270C (SW3550B)**			Prep Date: **7/1/2013**		Analyst: **DM**
4-Chloro-3-methylphenol	ND	0.38		mg/Kg-dry	1	7/2/2013
2-Chloronaphthalene	ND	0.2		mg/Kg-dry	1	7/2/2013
2-Chlorophenol	ND	0.2		mg/Kg-dry	1	7/2/2013
4-Chlorophenyl phenyl ether	ND	0.2		mg/Kg-dry	1	7/2/2013
Chrysene	0.12	0.038		mg/Kg-dry	1	7/2/2013
Dibenz(a,h)anthracene	ND	0.038		mg/Kg-dry	1	7/2/2013
Dibenzofuran	ND	0.2		mg/Kg-dry	1	7/2/2013
1,2-Dichlorobenzene	ND	0.2		mg/Kg-dry	1	7/2/2013
1,3-Dichlorobenzene	ND	0.2		mg/Kg-dry	1	7/2/2013
1,4-Dichlorobenzene	ND	0.2		mg/Kg-dry	1	7/2/2013
3,3'-Dichlorobenzidine	ND	0.2		mg/Kg-dry	1	7/2/2013
2,4-Dichlorophenol	ND	0.2		mg/Kg-dry	1	7/2/2013
Diethyl phthalate	ND	0.2		mg/Kg-dry	1	7/2/2013
2,4-Dimethylphenol	ND	0.2		mg/Kg-dry	1	7/2/2013
Dimethyl phthalate	ND	0.2		mg/Kg-dry	1	7/2/2013
4,6-Dinitro-2-methylphenol	ND	0.38		mg/Kg-dry	1	7/2/2013
2,4-Dinitrophenol	ND	0.96		mg/Kg-dry	1	7/2/2013
2,4-Dinitrotoluene	ND	0.038		mg/Kg-dry	1	7/2/2013
2,6-Dinitrotoluene	ND	0.038		mg/Kg-dry	1	7/2/2013
Di-n-butyl phthalate	ND	0.2		mg/Kg-dry	1	7/2/2013
Di-n-octyl phthalate	ND	0.2		mg/Kg-dry	1	7/2/2013
Fluoranthene	0.24	0.038		mg/Kg-dry	1	7/2/2013
Fluorene	ND	0.038		mg/Kg-dry	1	7/2/2013
Hexachlorobenzene	ND	0.2		mg/Kg-dry	1	7/2/2013
Hexachlorobutadiene	ND	0.2		mg/Kg-dry	1	7/2/2013
Hexachlorocyclopentadiene	ND	0.2		mg/Kg-dry	1	7/2/2013
Hexachloroethane	ND	0.2		mg/Kg-dry	1	7/2/2013
Indeno(1,2,3-cd)pyrene	0.044	0.038		mg/Kg-dry	1	7/2/2013
Isophorone	ND	0.2		mg/Kg-dry	1	7/2/2013
2-Methylnaphthalene	ND	0.2		mg/Kg-dry	1	7/2/2013
2-Methylphenol	ND	0.2		mg/Kg-dry	1	7/2/2013
4-Methylphenol	ND	0.2		mg/Kg-dry	1	7/2/2013
Naphthalene	ND	0.038		mg/Kg-dry	1	7/2/2013
2-Nitroaniline	ND	0.2		mg/Kg-dry	1	7/2/2013
3-Nitroaniline	ND	0.2		mg/Kg-dry	1	7/2/2013
4-Nitroaniline	ND	0.2		mg/Kg-dry	1	7/2/2013
2-Nitrophenol	ND	0.2		mg/Kg-dry	1	7/2/2013
4-Nitrophenol	ND	0.38		mg/Kg-dry	1	7/2/2013

Qualifiers:
ND - Not Detected at the Reporting Limit
J - Analyte detected below quantitation limits
B - Analyte detected in the associated Method Blank
HT - Sample received past holding time
* - Non-accredited parameter
RL - Reporting / Quantitation Limit for the analysis
S - Spike Recovery outside accepted recovery limits
R - RPD outside accepted recovery limits
E - Value above quantitation range
H - Holding time exceeded

STAT Analysis Corporation
2242 West Harrison St., Suite 200, Chicago, IL 60612-3766
Tel: (312) 733-0551 Fax: (312) 733-2386 STATinfo@STATAnalysis.com
Accreditation Numbers: IEPA ELAP 100445; ORELAP IL300001; AIHA 101160; NVLAP LabCode 101202

Date Reported: September 30, 2013
Date Printed: September 30, 2013

Client: Terracon Consultants, Inc.
Lab Order: 13060993
Project: A2137008, 650 West 83rd, Chicago, IL
Lab ID: 13060993-021

Client Sample ID: B-16 (1-3)
Collection Date 6/27/2013 9:15:00 AM
Matrix: Soil

Analyses	Result	RL	Qualifier	Units	DF	Date Analyzed
Semivolatile Organic Compounds by GC/MS	**SW8270C (SW3550B)**			Prep Date: **7/1/2013**		Analyst: **DM**
Nitrobenzene	ND	0.038		mg/Kg-dry	1	7/2/2013
N-Nitrosodi-n-propylamine	ND	0.038		mg/Kg-dry	1	7/2/2013
N-Nitrosodimethylamine	ND	0.2		mg/Kg-dry	1	7/2/2013
N-Nitrosodiphenylamine	ND	0.038		mg/Kg-dry	1	7/2/2013
2, 2'-oxybis(1-Chloropropane)	ND	0.2		mg/Kg-dry	1	7/2/2013
Pentachlorophenol	ND	0.077		mg/Kg-dry	1	7/2/2013
Phenanthrene	0.2	0.038		mg/Kg-dry	1	7/2/2013
Phenol	ND	0.2		mg/Kg-dry	1	7/2/2013
Pyrene	0.22	0.038		mg/Kg-dry	1	7/2/2013
Pyridine	ND	0.77		mg/Kg-dry	1	7/2/2013
1,2,4-Trichlorobenzene	ND	0.2		mg/Kg-dry	1	7/2/2013
2,4,5-Trichlorophenol	ND	0.2		mg/Kg-dry	1	7/2/2013
2,4,6-Trichlorophenol	ND	0.2		mg/Kg-dry	1	7/2/2013
Volatile Organic Compounds by GC/MS	**SW5035/8260B**			Prep Date: **7/1/2013**		Analyst: **PS**
Acetone	ND	0.077		mg/Kg-dry	1	7/3/2013
Benzene	0.78	0.21		mg/Kg-dry	50	7/3/2013
Bromodichloromethane	ND	0.0052		mg/Kg-dry	1	7/3/2013
Bromoform	ND	0.0052		mg/Kg-dry	1	7/3/2013
Bromomethane	ND	0.01		mg/Kg-dry	1	7/3/2013
2-Butanone	ND	0.077		mg/Kg-dry	1	7/3/2013
Carbon disulfide	ND	0.052		mg/Kg-dry	1	7/3/2013
Carbon tetrachloride	ND	0.0052		mg/Kg-dry	1	7/3/2013
Chlorobenzene	ND	0.0052		mg/Kg-dry	1	7/3/2013
Chloroethane	ND	0.01		mg/Kg-dry	1	7/3/2013
Chloroform	ND	0.0052		mg/Kg-dry	1	7/3/2013
Chloromethane	ND	0.01		mg/Kg-dry	1	7/3/2013
Dibromochloromethane	ND	0.0052		mg/Kg-dry	1	7/3/2013
1,1-Dichloroethane	ND	0.0052		mg/Kg-dry	1	7/3/2013
1,2-Dichloroethane	ND	0.0052		mg/Kg-dry	1	7/3/2013
1,1-Dichloroethene	ND	0.0052		mg/Kg-dry	1	7/3/2013
cis-1,2-Dichloroethene	ND	0.0052		mg/Kg-dry	1	7/3/2013
trans-1,2-Dichloroethene	ND	0.0052		mg/Kg-dry	1	7/3/2013
1,2-Dichloropropane	ND	0.0052		mg/Kg-dry	1	7/3/2013
cis-1,3-Dichloropropene	ND	0.0021		mg/Kg-dry	1	7/3/2013
trans-1,3-Dichloropropene	ND	0.0021		mg/Kg-dry	1	7/3/2013
Ethylbenzene	4	0.21		mg/Kg-dry	50	7/3/2013
2-Hexanone	ND	0.021		mg/Kg-dry	1	7/3/2013
4-Methyl-2-pentanone	ND	0.021		mg/Kg-dry	1	7/3/2013

Qualifiers:
ND - Not Detected at the Reporting Limit
J - Analyte detected below quantitation limits
B - Analyte detected in the associated Method Blank
HT - Sample received past holding time
* - Non-accredited parameter
RL - Reporting / Quantitation Limit for the analysis
S - Spike Recovery outside accepted recovery limits
R - RPD outside accepted recovery limits
E - Value above quantitation range
H - Holding time exceeded

STAT Analysis Corporation
2242 West Harrison St., Suite 200, Chicago, IL 60612-3766
Tel: (312) 733-0551 Fax: (312) 733-2386 STATinfo@STATAnalysis.com
Accreditation Numbers: IEPA ELAP 100445; ORELAP IL300001; AIHA 101160; NVLAP LabCode 101202

Date Reported: September 30, 2013
Date Printed: September 30, 2013

Client: Terracon Consultants, Inc.
Lab Order: 13060993
Project: A2137008, 650 West 83rd, Chicago, IL
Lab ID: 13060993-021

Client Sample ID: B-16 (1-3)
Collection Date 6/27/2013 9:15:00 AM
Matrix: Soil

Analyses	Result	RL	Qualifier	Units	DF	Date Analyzed
Volatile Organic Compounds by GC/MS	**SW5035/8260B**			Prep Date: **7/1/2013**		Analyst: **PS**
Methylene chloride	ND	0.01		mg/Kg-dry	1	7/3/2013
Methyl tert-butyl ether	ND	0.0052		mg/Kg-dry	1	7/3/2013
Styrene	ND	0.0052		mg/Kg-dry	1	7/3/2013
1,1,2,2-Tetrachloroethane	ND	0.0052		mg/Kg-dry	1	7/3/2013
Tetrachloroethene	ND	0.0052		mg/Kg-dry	1	7/3/2013
Toluene	5.9	0.21		mg/Kg-dry	50	7/3/2013
1,1,1-Trichloroethane	ND	0.0052		mg/Kg-dry	1	7/3/2013
1,1,2-Trichloroethane	ND	0.0052		mg/Kg-dry	1	7/3/2013
Trichloroethene	ND	0.0052		mg/Kg-dry	1	7/3/2013
Vinyl chloride	ND	0.0052		mg/Kg-dry	1	7/3/2013
Xylenes, Total	19	0.62		mg/Kg-dry	50	7/3/2013
Cyanide, Total	**SW9012A**			Prep Date: **7/3/2013**		Analyst: **YZ**
Cyanide	ND	0.29		mg/Kg-dry	1	7/3/2013
Organic Carbon Content	**D2974**			Prep Date: **7/16/2013**		Analyst: **SDA**
Organic Carbon Content	2.7	0.01	*	wt%	1	7/16/2013
pH (25 °C)	**SW9045C**			Prep Date: **7/2/2013**		Analyst: **RW**
pH	8.9			pH Units	1	7/2/2013
Percent Moisture	**D2974**			Prep Date: **7/2/2013**		Analyst: **SDA**
Percent Moisture	14.3	0.2	*	wt%	1	7/2/2013

Qualifiers:

ND - Not Detected at the Reporting Limit
J - Analyte detected below quantitation limits
B - Analyte detected in the associated Method Blank
HT - Sample received past holding time
* - Non-accredited parameter
RL - Reporting / Quantitation Limit for the analysis
S - Spike Recovery outside accepted recovery limits
R - RPD outside accepted recovery limits
E - Value above quantitation range
H - Holding time exceeded

STAT Analysis Corporation
2242 West Harrison St., Suite 200, Chicago, IL 60612-3766
Tel: (312) 733-0551 Fax: (312) 733-2386 STATinfo@STATAnalysis.com
Accreditation Numbers: IEPA ELAP 100445; ORELAP IL300001; AIHA 101160; NVLAP LabCode 101202

Date Reported: September 30, 2013
Date Printed: September 30, 2013

Client: Terracon Consultants, Inc.
Lab Order: 13060993
Project: A2137008, 650 West 83rd, Chicago, IL
Lab ID: 13060993-022

Client Sample ID: B-16 (4-6)
Collection Date 6/27/2013 9:20:00 AM
Matrix: Soil

Analyses	Result	RL	Qualifier	Units	DF	Date Analyzed
PCBs		**SW8082 (SW3550B)**		Prep Date: **7/1/2013**		Analyst: **GVC**
Aroclor 1016	ND	0.11		mg/Kg-dry	1	7/2/2013
Aroclor 1221	ND	0.11		mg/Kg-dry	1	7/2/2013
Aroclor 1232	ND	0.11		mg/Kg-dry	1	7/2/2013
Aroclor 1242	ND	0.11		mg/Kg-dry	1	7/2/2013
Aroclor 1248	ND	0.11		mg/Kg-dry	1	7/2/2013
Aroclor 1254	ND	0.11		mg/Kg-dry	1	7/2/2013
Aroclor 1260	ND	0.11		mg/Kg-dry	1	7/2/2013
Pesticides		**SW8081 (SW3550B)**		Prep Date: **7/1/2013**		Analyst: **GVC**
4,4'-DDD	ND	0.0022		mg/Kg-dry	1	7/2/2013
4,4'-DDE	ND	0.0022		mg/Kg-dry	1	7/2/2013
4,4'-DDT	ND	0.0022		mg/Kg-dry	1	7/2/2013
Aldrin	ND	0.0022		mg/Kg-dry	1	7/2/2013
alpha-BHC	ND	0.0022		mg/Kg-dry	1	7/2/2013
alpha-Chlordane	ND	0.0022		mg/Kg-dry	1	7/2/2013
beta-BHC	ND	0.0022		mg/Kg-dry	1	7/2/2013
Chlordane	ND	0.022		mg/Kg-dry	1	7/2/2013
delta-BHC	ND	0.0022		mg/Kg-dry	1	7/2/2013
Dieldrin	ND	0.0022		mg/Kg-dry	1	7/2/2013
Endosulfan I	ND	0.0022		mg/Kg-dry	1	7/2/2013
Endosulfan II	ND	0.0022		mg/Kg-dry	1	7/2/2013
Endosulfan sulfate	ND	0.0022		mg/Kg-dry	1	7/2/2013
Endrin	ND	0.0022		mg/Kg-dry	1	7/2/2013
Endrin aldehyde	ND	0.0022		mg/Kg-dry	1	7/2/2013
Endrin ketone	ND	0.0022		mg/Kg-dry	1	7/2/2013
gamma-BHC	ND	0.0022		mg/Kg-dry	1	7/2/2013
gamma-Chlordane	ND	0.0022		mg/Kg-dry	1	7/2/2013
Heptachlor	ND	0.0022		mg/Kg-dry	1	7/2/2013
Heptachlor epoxide	ND	0.0022		mg/Kg-dry	1	7/2/2013
Methoxychlor	ND	0.0022		mg/Kg-dry	1	7/2/2013
Toxaphene	ND	0.045		mg/Kg-dry	1	7/2/2013
Mercury		**SW7471A**		Prep Date: **7/5/2013**		Analyst: **LB**
Mercury	0.13	0.022		mg/Kg-dry	1	7/5/2013
Metals by ICP/MS		**SW6020 (SW3050B)**		Prep Date: **7/3/2013**		Analyst: **JG**
Aluminum	9400	280		mg/Kg-dry	100	7/3/2013
Antimony	630	28		mg/Kg-dry	100	7/3/2013
Arsenic	23	1.4		mg/Kg-dry	10	7/3/2013
Barium	1000	1.4		mg/Kg-dry	10	7/3/2013

Qualifiers:
ND - Not Detected at the Reporting Limit
J - Analyte detected below quantitation limits
B - Analyte detected in the associated Method Blank
HT - Sample received past holding time
* - Non-accredited parameter
RL - Reporting / Quantitation Limit for the analysis
S - Spike Recovery outside accepted recovery limits
R - RPD outside accepted recovery limits
E - Value above quantitation range
H - Holding time exceeded

STAT Analysis Corporation
2242 West Harrison St., Suite 200, Chicago, IL 60612-3766
Tel: (312) 733-0551 Fax: (312) 733-2386 STATinfo@STATAnalysis.com
Accreditation Numbers: IEPA ELAP 100445; ORELAP IL300001; AIHA 101160; NVLAP LabCode 101202

Date Reported: September 30, 2013
Date Printed: September 30, 2013

Client: Terracon Consultants, Inc.
Lab Order: 13060993
Project: A2137008, 650 West 83rd, Chicago, IL
Lab ID: 13060993-022

Client Sample ID: B-16 (4-6)
Collection Date 6/27/2013 9:20:00 AM
Matrix: Soil

Analyses	Result	RL	Qualifier	Units	DF	Date Analyzed
Metals by ICP/MS	**SW6020 (SW3050B)**			Prep Date: **7/3/2013**		Analyst: **JG**
Beryllium	2.6	0.71		mg/Kg-dry	10	7/3/2013
Cadmium	2.3	0.71		mg/Kg-dry	10	7/3/2013
Calcium	15000	85		mg/Kg-dry	10	7/3/2013
Chromium	17	1.4		mg/Kg-dry	10	7/3/2013
Cobalt	7.3	1.4		mg/Kg-dry	10	7/3/2013
Copper	90	3.5		mg/Kg-dry	10	7/3/2013
Iron	36000	430		mg/Kg-dry	100	7/3/2013
Lead	7700	7.1		mg/Kg-dry	100	7/3/2013
Magnesium	3900	43		mg/Kg-dry	10	7/3/2013
Manganese	440	1.4		mg/Kg-dry	10	7/3/2013
Nickel	36	1.4		mg/Kg-dry	10	7/3/2013
Potassium	2200	43		mg/Kg-dry	10	7/3/2013
Selenium	1.4	1.4		mg/Kg-dry	10	7/3/2013
Silver	ND	1.4		mg/Kg-dry	10	7/3/2013
Sodium	1400	85		mg/Kg-dry	10	7/3/2013
Thallium	ND	1.4		mg/Kg-dry	10	7/3/2013
Vanadium	42	1.4		mg/Kg-dry	10	7/3/2013
Zinc	380	7.1		mg/Kg-dry	10	7/3/2013
TCLP Metals by ICP/MS	**SW1311/6020 (SW3005A)**			Prep Date: **7/17/2013**		Analyst: **JG**
Lead	17	0.005		mg/L	5	7/17/2013
Semivolatile Organic Compounds by GC/MS	**SW8270C (SW3550B)**			Prep Date: **7/1/2013**		Analyst: **DM**
Acenaphthene	ND	0.044		mg/Kg-dry	1	7/2/2013
Acenaphthylene	ND	0.044		mg/Kg-dry	1	7/2/2013
Aniline	ND	0.45		mg/Kg-dry	1	7/2/2013
Anthracene	ND	0.044		mg/Kg-dry	1	7/2/2013
Benz(a)anthracene	ND	0.044		mg/Kg-dry	1	7/2/2013
Benzidine	ND	0.44		mg/Kg-dry	1	7/2/2013
Benzo(a)pyrene	ND	0.044		mg/Kg-dry	1	7/2/2013
Benzo(b)fluoranthene	ND	0.044		mg/Kg-dry	1	7/2/2013
Benzo(g,h,i)perylene	ND	0.044		mg/Kg-dry	1	7/2/2013
Benzo(k)fluoranthene	ND	0.044		mg/Kg-dry	1	7/2/2013
Benzoic acid	ND	1.1		mg/Kg-dry	1	7/2/2013
Benzyl alcohol	ND	0.23		mg/Kg-dry	1	7/2/2013
Bis(2-chloroethoxy)methane	ND	0.23		mg/Kg-dry	1	7/2/2013
Bis(2-chloroethyl)ether	ND	0.23		mg/Kg-dry	1	7/2/2013
Bis(2-ethylhexyl)phthalate	ND	1.1		mg/Kg-dry	1	7/2/2013
4-Bromophenyl phenyl ether	ND	0.23		mg/Kg-dry	1	7/2/2013

Qualifiers:
ND - Not Detected at the Reporting Limit
J - Analyte detected below quantitation limits
B - Analyte detected in the associated Method Blank
HT - Sample received past holding time
* - Non-accredited parameter
RL - Reporting / Quantitation Limit for the analysis
S - Spike Recovery outside accepted recovery limits
R - RPD outside accepted recovery limits
E - Value above quantitation range
H - Holding time exceeded

STAT Analysis Corporation
2242 West Harrison St., Suite 200, Chicago, IL 60612-3766
Tel: (312) 733-0551 Fax: (312) 733-2386 STATinfo@STATAnalysis.com
Accreditation Numbers: IEPA ELAP 100445; ORELAP IL300001; AIHA 101160; NVLAP LabCode 101202

Date Reported: September 30, 2013
Date Printed: September 30, 2013

Client: Terracon Consultants, Inc.
Lab Order: 13060993
Project: A2137008, 650 West 83rd, Chicago, IL
Lab ID: 13060993-022

Client Sample ID: B-16 (4-6)
Collection Date 6/27/2013 9:20:00 AM
Matrix: Soil

Analyses	Result	RL	Qualifier	Units	DF	Date Analyzed
Semivolatile Organic Compounds by GC/MS	**SW8270C (SW3550B)**		Prep Date: **7/1/2013**			Analyst: **DM**
Butyl benzyl phthalate	ND	0.23		mg/Kg-dry	1	7/2/2013
Carbazole	ND	0.23		mg/Kg-dry	1	7/2/2013
4-Chloroaniline	ND	0.23		mg/Kg-dry	1	7/2/2013
4-Chloro-3-methylphenol	ND	0.44		mg/Kg-dry	1	7/2/2013
2-Chloronaphthalene	ND	0.23		mg/Kg-dry	1	7/2/2013
2-Chlorophenol	ND	0.23		mg/Kg-dry	1	7/2/2013
4-Chlorophenyl phenyl ether	ND	0.23		mg/Kg-dry	1	7/2/2013
Chrysene	ND	0.044		mg/Kg-dry	1	7/2/2013
Dibenz(a,h)anthracene	ND	0.044		mg/Kg-dry	1	7/2/2013
Dibenzofuran	ND	0.23		mg/Kg-dry	1	7/2/2013
1,2-Dichlorobenzene	ND	0.23		mg/Kg-dry	1	7/2/2013
1,3-Dichlorobenzene	ND	0.23		mg/Kg-dry	1	7/2/2013
1,4-Dichlorobenzene	ND	0.23		mg/Kg-dry	1	7/2/2013
3,3'-Dichlorobenzidine	ND	0.23		mg/Kg-dry	1	7/2/2013
2,4-Dichlorophenol	ND	0.23		mg/Kg-dry	1	7/2/2013
Diethyl phthalate	ND	0.23		mg/Kg-dry	1	7/2/2013
2,4-Dimethylphenol	ND	0.23		mg/Kg-dry	1	7/2/2013
Dimethyl phthalate	ND	0.23		mg/Kg-dry	1	7/2/2013
4,6-Dinitro-2-methylphenol	ND	0.44		mg/Kg-dry	1	7/2/2013
2,4-Dinitrophenol	ND	1.1		mg/Kg-dry	1	7/2/2013
2,4-Dinitrotoluene	ND	0.044		mg/Kg-dry	1	7/2/2013
2,6-Dinitrotoluene	ND	0.044		mg/Kg-dry	1	7/2/2013
Di-n-butyl phthalate	ND	0.23		mg/Kg-dry	1	7/2/2013
Di-n-octyl phthalate	ND	0.23		mg/Kg-dry	1	7/2/2013
Fluoranthene	0.047	0.044		mg/Kg-dry	1	7/2/2013
Fluorene	ND	0.044		mg/Kg-dry	1	7/2/2013
Hexachlorobenzene	ND	0.23		mg/Kg-dry	1	7/2/2013
Hexachlorobutadiene	ND	0.23		mg/Kg-dry	1	7/2/2013
Hexachlorocyclopentadiene	ND	0.23		mg/Kg-dry	1	7/2/2013
Hexachloroethane	ND	0.23		mg/Kg-dry	1	7/2/2013
Indeno(1,2,3-cd)pyrene	ND	0.044		mg/Kg-dry	1	7/2/2013
Isophorone	ND	0.23		mg/Kg-dry	1	7/2/2013
2-Methylnaphthalene	ND	0.23		mg/Kg-dry	1	7/2/2013
2-Methylphenol	ND	0.23		mg/Kg-dry	1	7/2/2013
4-Methylphenol	ND	0.23		mg/Kg-dry	1	7/2/2013
Naphthalene	ND	0.044		mg/Kg-dry	1	7/2/2013
2-Nitroaniline	ND	0.23		mg/Kg-dry	1	7/2/2013
3-Nitroaniline	ND	0.23		mg/Kg-dry	1	7/2/2013

Qualifiers:
ND - Not Detected at the Reporting Limit
J - Analyte detected below quantitation limits
B - Analyte detected in the associated Method Blank
HT - Sample received past holding time
* - Non-accredited parameter
RL - Reporting / Quantitation Limit for the analysis
S - Spike Recovery outside accepted recovery limits
R - RPD outside accepted recovery limits
E - Value above quantitation range
H - Holding time exceeded

STAT Analysis Corporation
2242 West Harrison St., Suite 200, Chicago, IL 60612-3766
Tel: (312) 733-0551 Fax: (312) 733-2386 STATinfo@STATAnalysis.com
Accreditation Numbers: IEPA ELAP 100445; ORELAP IL300001; AIHA 101160; NVLAP LabCode 101202

Date Reported: September 30, 2013
Date Printed: September 30, 2013

Client: Terracon Consultants, Inc.
Lab Order: 13060993
Project: A2137008, 650 West 83rd, Chicago, IL
Lab ID: 13060993-022

Client Sample ID: B-16 (4-6)
Collection Date 6/27/2013 9:20:00 AM
Matrix: Soil

Analyses	Result	RL	Qualifier	Units	DF	Date Analyzed
Semivolatile Organic Compounds by GC/MS	**SW8270C (SW3550B)**			Prep Date: **7/1/2013**		Analyst: **DM**
4-Nitroaniline	ND	0.23		mg/Kg-dry	1	7/2/2013
2-Nitrophenol	ND	0.23		mg/Kg-dry	1	7/2/2013
4-Nitrophenol	ND	0.44		mg/Kg-dry	1	7/2/2013
Nitrobenzene	ND	0.044		mg/Kg-dry	1	7/2/2013
N-Nitrosodi-n-propylamine	ND	0.044		mg/Kg-dry	1	7/2/2013
N-Nitrosodimethylamine	ND	0.23		mg/Kg-dry	1	7/2/2013
N-Nitrosodiphenylamine	ND	0.044		mg/Kg-dry	1	7/2/2013
2, 2'-oxybis(1-Chloropropane)	ND	0.23		mg/Kg-dry	1	7/2/2013
Pentachlorophenol	ND	0.09		mg/Kg-dry	1	7/2/2013
Phenanthrene	ND	0.044		mg/Kg-dry	1	7/2/2013
Phenol	ND	0.23		mg/Kg-dry	1	7/2/2013
Pyrene	ND	0.044		mg/Kg-dry	1	7/2/2013
Pyridine	ND	0.9		mg/Kg-dry	1	7/2/2013
1,2,4-Trichlorobenzene	ND	0.23		mg/Kg-dry	1	7/2/2013
2,4,5-Trichlorophenol	ND	0.23		mg/Kg-dry	1	7/2/2013
2,4,6-Trichlorophenol	ND	0.23		mg/Kg-dry	1	7/2/2013
Volatile Organic Compounds by GC/MS	**SW5035/8260B**			Prep Date: **7/1/2013**		Analyst: **PS**
Acetone	ND	0.083		mg/Kg-dry	1	7/3/2013
Benzene	ND	0.0055		mg/Kg-dry	1	7/3/2013
Bromodichloromethane	ND	0.0055		mg/Kg-dry	1	7/3/2013
Bromoform	ND	0.0055		mg/Kg-dry	1	7/3/2013
Bromomethane	ND	0.011		mg/Kg-dry	1	7/3/2013
2-Butanone	ND	0.083		mg/Kg-dry	1	7/3/2013
Carbon disulfide	ND	0.055		mg/Kg-dry	1	7/3/2013
Carbon tetrachloride	ND	0.0055		mg/Kg-dry	1	7/3/2013
Chlorobenzene	ND	0.0055		mg/Kg-dry	1	7/3/2013
Chloroethane	ND	0.011		mg/Kg-dry	1	7/3/2013
Chloroform	ND	0.0055		mg/Kg-dry	1	7/3/2013
Chloromethane	ND	0.011		mg/Kg-dry	1	7/3/2013
Dibromochloromethane	ND	0.0055		mg/Kg-dry	1	7/3/2013
1,1-Dichloroethane	ND	0.0055		mg/Kg-dry	1	7/3/2013
1,2-Dichloroethane	ND	0.0055		mg/Kg-dry	1	7/3/2013
1,1-Dichloroethene	ND	0.0055		mg/Kg-dry	1	7/3/2013
cis-1,2-Dichloroethene	ND	0.0055		mg/Kg-dry	1	7/3/2013
trans-1,2-Dichloroethene	ND	0.0055		mg/Kg-dry	1	7/3/2013
1,2-Dichloropropane	ND	0.0055		mg/Kg-dry	1	7/3/2013
cis-1,3-Dichloropropene	ND	0.0022		mg/Kg-dry	1	7/3/2013
trans-1,3-Dichloropropene	ND	0.0022		mg/Kg-dry	1	7/3/2013

Qualifiers:
ND - Not Detected at the Reporting Limit
J - Analyte detected below quantitation limits
B - Analyte detected in the associated Method Blank
HT - Sample received past holding time
* - Non-accredited parameter
RL - Reporting / Quantitation Limit for the analysis
S - Spike Recovery outside accepted recovery limits
R - RPD outside accepted recovery limits
E - Value above quantitation range
H - Holding time exceeded

STAT Analysis Corporation
2242 West Harrison St., Suite 200, Chicago, IL 60612-3766
Tel: (312) 733-0551 Fax: (312) 733-2386 STATinfo@STATAnalysis.com
Accreditation Numbers: IEPA ELAP 100445; ORELAP IL300001; AIHA 101160; NVLAP LabCode 101202

Date Reported: September 30, 2013
Date Printed: September 30, 2013

Client: Terracon Consultants, Inc.
Lab Order: 13060993
Project: A2137008, 650 West 83rd, Chicago, IL
Lab ID: 13060993-022

Client Sample ID: B-16 (4-6)
Collection Date 6/27/2013 9:20:00 AM
Matrix: Soil

Analyses	Result	RL	Qualifier	Units	DF	Date Analyzed
Volatile Organic Compounds by GC/MS	**SW5035/8260B**			Prep Date: **7/1/2013**		Analyst: **PS**
Ethylbenzene	ND	0.0055		mg/Kg-dry	1	7/3/2013
2-Hexanone	ND	0.022		mg/Kg-dry	1	7/3/2013
4-Methyl-2-pentanone	ND	0.022		mg/Kg-dry	1	7/3/2013
Methylene chloride	ND	0.011		mg/Kg-dry	1	7/3/2013
Methyl tert-butyl ether	ND	0.0055		mg/Kg-dry	1	7/3/2013
Styrene	ND	0.0055		mg/Kg-dry	1	7/3/2013
1,1,2,2-Tetrachloroethane	ND	0.0055		mg/Kg-dry	1	7/3/2013
Tetrachloroethene	ND	0.0055		mg/Kg-dry	1	7/3/2013
Toluene	ND	0.0055		mg/Kg-dry	1	7/3/2013
1,1,1-Trichloroethane	ND	0.0055		mg/Kg-dry	1	7/3/2013
1,1,2-Trichloroethane	ND	0.0055		mg/Kg-dry	1	7/3/2013
Trichloroethene	ND	0.0055		mg/Kg-dry	1	7/3/2013
Vinyl chloride	ND	0.0055		mg/Kg-dry	1	7/3/2013
Xylenes, Total	ND	0.017		mg/Kg-dry	1	7/3/2013
Cyanide, Total	**SW9012A**			Prep Date: **7/1/2013**		Analyst: **YZ**
Cyanide	ND	0.34		mg/Kg-dry	1	7/2/2013
pH (25 °C)	**SW9045C**			Prep Date: **7/2/2013**		Analyst: **RW**
pH	7.1			pH Units	1	7/2/2013
Percent Moisture	**D2974**			Prep Date: **7/2/2013**		Analyst: **SDA**
Percent Moisture	26.4	0.2	*	wt%	1	7/2/2013

Qualifiers:
ND - Not Detected at the Reporting Limit
J - Analyte detected below quantitation limits
B - Analyte detected in the associated Method Blank
HT - Sample received past holding time
* - Non-accredited parameter
RL - Reporting / Quantitation Limit for the analysis
S - Spike Recovery outside accepted recovery limits
R - RPD outside accepted recovery limits
E - Value above quantitation range
H - Holding time exceeded

STAT Analysis Corporation
2242 West Harrison St., Suite 200, Chicago, IL 60612-3766
Tel: (312) 733-0551 Fax: (312) 733-2386 STATinfo@STATAnalysis.com
Accreditation Numbers: IEPA ELAP 100445; ORELAP IL300001; AIHA 101160; NVLAP LabCode 101202

Date Reported: September 30, 2013
Date Printed: September 30, 2013

Client: Terracon Consultants, Inc.
Lab Order: 13060993
Project: A2137008, 650 West 83rd, Chicago, IL
Lab ID: 13060993-023

Client Sample ID: B-7 (1-3)
Collection Date 6/27/2013 9:00:00 AM
Matrix: Soil

Analyses	Result	RL	Qualifier	Units	DF	Date Analyzed
Mercury	**SW7471A**			Prep Date: **7/5/2013**		Analyst: **LB**
Mercury	0.094	0.021		mg/Kg-dry	1	7/5/2013
Metals by ICP/MS	**SW6020 (SW3050B)**			Prep Date: **7/2/2013**		Analyst: **JG**
Arsenic	6.1	1.2		mg/Kg-dry	10	7/3/2013
Barium	220	1.2		mg/Kg-dry	10	7/3/2013
Cadmium	3.5	0.58		mg/Kg-dry	10	7/3/2013
Chromium	52	1.2		mg/Kg-dry	10	7/3/2013
Lead	720	0.58		mg/Kg-dry	10	7/3/2013
Selenium	ND	1.2		mg/Kg-dry	10	7/3/2013
Silver	ND	1.2		mg/Kg-dry	10	7/3/2013
Semivolatile Organic Compounds by GC/MS	**SW8270C (SW3550B)**			Prep Date: **7/1/2013**		Analyst: **DM**
Acenaphthene	0.33	0.039		mg/Kg-dry	1	7/2/2013
Acenaphthylene	0.19	0.039		mg/Kg-dry	1	7/2/2013
Anthracene	1.4	0.039		mg/Kg-dry	1	7/2/2013
Benz(a)anthracene	4.4	0.039		mg/Kg-dry	1	7/2/2013
Benzo(a)pyrene	4.3	0.039		mg/Kg-dry	1	7/2/2013
Benzo(b)fluoranthene	4.6	0.039		mg/Kg-dry	1	7/2/2013
Benzo(g,h,i)perylene	2.4	0.039		mg/Kg-dry	1	7/2/2013
Benzo(k)fluoranthene	2.9	0.039		mg/Kg-dry	1	7/2/2013
Chrysene	4.5	0.039		mg/Kg-dry	1	7/2/2013
Dibenz(a,h)anthracene	1.2	0.039		mg/Kg-dry	1	7/2/2013
Fluoranthene	9.8	0.39		mg/Kg-dry	10	7/3/2013
Fluorene	0.42	0.039		mg/Kg-dry	1	7/2/2013
Indeno(1,2,3-cd)pyrene	2.2	0.039		mg/Kg-dry	1	7/2/2013
Naphthalene	0.09	0.039		mg/Kg-dry	1	7/2/2013
Phenanthrene	5.4	0.39		mg/Kg-dry	10	7/3/2013
Pyrene	7.8	0.39		mg/Kg-dry	10	7/3/2013
BTEX by GC/MS	**SW5035/8260B**			Prep Date: **7/1/2013**		Analyst: **PS**
Benzene	ND	0.0048		mg/Kg-dry	1	7/3/2013
Ethylbenzene	ND	0.0048		mg/Kg-dry	1	7/3/2013
Toluene	ND	0.0048		mg/Kg-dry	1	7/3/2013
Xylenes, Total	ND	0.014		mg/Kg-dry	1	7/3/2013
Percent Moisture	**D2974**			Prep Date: **7/2/2013**		Analyst: **SDA**
Percent Moisture	15.4	0.2	*	wt%	1	7/2/2013

Qualifiers:
ND - Not Detected at the Reporting Limit
J - Analyte detected below quantitation limits
B - Analyte detected in the associated Method Blank
HT - Sample received past holding time
* - Non-accredited parameter
RL - Reporting / Quantitation Limit for the analysis
S - Spike Recovery outside accepted recovery limits
R - RPD outside accepted recovery limits
E - Value above quantitation range
H - Holding time exceeded

STAT Analysis Corporation
2242 West Harrison St., Suite 200, Chicago, IL 60612-3766
Tel: (312) 733-0551 Fax: (312) 733-2386 STATinfo@STATAnalysis.com
Accreditation Numbers: IEPA ELAP 100445; ORELAP IL300001; AIHA 101160; NVLAP LabCode 101202

Date Reported: September 30, 2013
Date Printed: September 30, 2013

Client: Terracon Consultants, Inc.
Lab Order: 13060993
Project: A2137008, 650 West 83rd, Chicago, IL
Lab ID: 13060993-024

Client Sample ID: B-7 (4-6)
Collection Date 6/27/2013 9:10:00 AM
Matrix: Soil

Analyses	Result	RL	Qualifier	Units	DF	Date Analyzed
Mercury	**SW7471A**			Prep Date: **7/5/2013**		Analyst: **LB**
Mercury	0.72	0.035		mg/Kg-dry	1	7/5/2013
Metals by ICP/MS	**SW6020 (SW3050B)**			Prep Date: **7/2/2013**		Analyst: **JG**
Arsenic	15	1.8		mg/Kg-dry	10	7/3/2013
Barium	240	1.8		mg/Kg-dry	10	7/3/2013
Cadmium	1.3	0.91		mg/Kg-dry	10	7/3/2013
Chromium	13	1.8		mg/Kg-dry	10	7/3/2013
Lead	550	0.91		mg/Kg-dry	10	7/3/2013
Selenium	2.3	1.8		mg/Kg-dry	10	7/3/2013
Silver	ND	1.8		mg/Kg-dry	10	7/3/2013
Semivolatile Organic Compounds by GC/MS	**SW8270C (SW3550B)**			Prep Date: **7/1/2013**		Analyst: **DM**
Acenaphthene	ND	0.06		mg/Kg-dry	1	7/2/2013
Acenaphthylene	ND	0.06		mg/Kg-dry	1	7/2/2013
Anthracene	ND	0.06		mg/Kg-dry	1	7/2/2013
Benz(a)anthracene	0.073	0.06		mg/Kg-dry	1	7/2/2013
Benzo(a)pyrene	0.071	0.06		mg/Kg-dry	1	7/2/2013
Benzo(b)fluoranthene	ND	0.06		mg/Kg-dry	1	7/2/2013
Benzo(g,h,i)perylene	ND	0.06		mg/Kg-dry	1	7/2/2013
Benzo(k)fluoranthene	0.081	0.06		mg/Kg-dry	1	7/2/2013
Chrysene	0.071	0.06		mg/Kg-dry	1	7/2/2013
Dibenz(a,h)anthracene	ND	0.06		mg/Kg-dry	1	7/2/2013
Fluoranthene	0.14	0.06		mg/Kg-dry	1	7/2/2013
Fluorene	ND	0.06		mg/Kg-dry	1	7/2/2013
Indeno(1,2,3-cd)pyrene	ND	0.06		mg/Kg-dry	1	7/2/2013
Naphthalene	ND	0.06		mg/Kg-dry	1	7/2/2013
Phenanthrene	0.091	0.06		mg/Kg-dry	1	7/2/2013
Pyrene	0.14	0.06		mg/Kg-dry	1	7/2/2013
BTEX by GC/MS	**SW5035/8260B**			Prep Date: **7/1/2013**		Analyst: **PS**
Benzene	ND	0.0078		mg/Kg-dry	1	7/3/2013
Ethylbenzene	ND	0.0078		mg/Kg-dry	1	7/3/2013
Toluene	ND	0.0078		mg/Kg-dry	1	7/3/2013
Xylenes, Total	ND	0.024		mg/Kg-dry	1	7/3/2013
Percent Moisture	**D2974**			Prep Date: **7/2/2013**		Analyst: **SDA**
Percent Moisture	45.4	0.2	*	wt%	1	7/2/2013

Qualifiers:
ND - Not Detected at the Reporting Limit
J - Analyte detected below quantitation limits
B - Analyte detected in the associated Method Blank
HT - Sample received past holding time
* - Non-accredited parameter
RL - Reporting / Quantitation Limit for the analysis
S - Spike Recovery outside accepted recovery limits
R - RPD outside accepted recovery limits
E - Value above quantitation range
H - Holding time exceeded

STAT Analysis Corporation
2242 West Harrison St., Suite 200, Chicago, IL 60612-3766
Tel: (312) 733-0551 Fax: (312) 733-2386 STATinfo@STATAnalysis.com
Accreditation Numbers: IEPA ELAP 100445; ORELAP IL300001; AIHA 101160; NVLAP LabCode 101202

Date Reported: September 30, 2013
Date Printed: September 30, 2013

Client: Terracon Consultants, Inc.
Lab Order: 13060993
Project: A2137008, 650 West 83rd, Chicago, IL
Lab ID: 13060993-025

Client Sample ID: B-20 (1-3)
Collection Date 6/27/2013 8:35:00 AM
Matrix: Soil

Analyses	Result	RL	Qualifier	Units	DF	Date Analyzed
PCBs	**SW8082 (SW3550B)**			Prep Date: **6/28/2013**		Analyst: **GVC**
Aroclor 1016	ND	0.097		mg/Kg-dry	1	6/30/2013
Aroclor 1221	ND	0.097		mg/Kg-dry	1	6/30/2013
Aroclor 1232	ND	0.097		mg/Kg-dry	1	6/30/2013
Aroclor 1242	ND	0.097		mg/Kg-dry	1	6/30/2013
Aroclor 1248	ND	0.097		mg/Kg-dry	1	6/30/2013
Aroclor 1254	ND	0.097		mg/Kg-dry	1	6/30/2013
Aroclor 1260	ND	0.097		mg/Kg-dry	1	6/30/2013
Pesticides	**SW8081 (SW3550B)**			Prep Date: **6/28/2013**		Analyst: **GVC**
4,4'-DDD	ND	0.002		mg/Kg-dry	1	6/30/2013
4,4'-DDE	ND	0.002		mg/Kg-dry	1	6/30/2013
4,4'-DDT	ND	0.002		mg/Kg-dry	1	6/30/2013
Aldrin	ND	0.002		mg/Kg-dry	1	6/30/2013
alpha-BHC	ND	0.002		mg/Kg-dry	1	6/30/2013
alpha-Chlordane	ND	0.002		mg/Kg-dry	1	6/30/2013
beta-BHC	ND	0.002		mg/Kg-dry	1	6/30/2013
Chlordane	ND	0.02		mg/Kg-dry	1	6/30/2013
delta-BHC	ND	0.002		mg/Kg-dry	1	6/30/2013
Dieldrin	ND	0.002		mg/Kg-dry	1	6/30/2013
Endosulfan I	ND	0.002		mg/Kg-dry	1	6/30/2013
Endosulfan II	ND	0.002		mg/Kg-dry	1	6/30/2013
Endosulfan sulfate	ND	0.002		mg/Kg-dry	1	6/30/2013
Endrin	ND	0.002		mg/Kg-dry	1	6/30/2013
Endrin aldehyde	ND	0.002		mg/Kg-dry	1	6/30/2013
Endrin ketone	ND	0.002		mg/Kg-dry	1	6/30/2013
gamma-BHC	ND	0.002		mg/Kg-dry	1	6/30/2013
gamma-Chlordane	ND	0.002		mg/Kg-dry	1	6/30/2013
Heptachlor	ND	0.002		mg/Kg-dry	1	6/30/2013
Heptachlor epoxide	ND	0.002		mg/Kg-dry	1	6/30/2013
Methoxychlor	ND	0.002		mg/Kg-dry	1	6/30/2013
Toxaphene	ND	0.041		mg/Kg-dry	1	6/30/2013
Herbicides in Soil	**SW8321A (SW3550B)**			Prep Date: **7/1/2013**		Analyst: **MEP**
2,4,5-T	ND	0.0041		mg/Kg-dry	1	7/2/2013
2,4,5-TP (Silvex)	ND	0.0041		mg/Kg-dry	1	7/2/2013
2,4-D	ND	0.0041		mg/Kg-dry	1	7/2/2013
2,4-DB	ND	0.0081		mg/Kg-dry	1	7/2/2013
3,5-Dichlorobenzoic Acid	ND	0.0041	*	mg/Kg-dry	1	7/2/2013
4-Nitrophenol	ND	0.041	*	mg/Kg-dry	1	7/2/2013

Qualifiers:
ND - Not Detected at the Reporting Limit
J - Analyte detected below quantitation limits
B - Analyte detected in the associated Method Blank
HT - Sample received past holding time
* - Non-accredited parameter
RL - Reporting / Quantitation Limit for the analysis
S - Spike Recovery outside accepted recovery limits
R - RPD outside accepted recovery limits
E - Value above quantitation range
H - Holding time exceeded

STAT Analysis Corporation
2242 West Harrison St., Suite 200, Chicago, IL 60612-3766
Tel: (312) 733-0551 Fax: (312) 733-2386 STATinfo@STATAnalysis.com
Accreditation Numbers: IEPA ELAP 100445; ORELAP IL300001; AIHA 101160; NVLAP LabCode 101202

Date Reported: September 30, 2013
Date Printed: September 30, 2013

Client: Terracon Consultants, Inc.
Lab Order: 13060993
Project: A2137008, 650 West 83rd, Chicago, IL
Lab ID: 13060993-025

Client Sample ID: B-20 (1-3)
Collection Date 6/27/2013 8:35:00 AM
Matrix: Soil

Analyses	Result	RL	Qualifier	Units	DF	Date Analyzed
Herbicides in Soil	**SW8321A (SW3550B)**			Prep Date: **7/1/2013**		Analyst: **MEP**
Acifluorfen	ND	0.0041	*	mg/Kg-dry	1	7/2/2013
Chloramben	ND	0.0041	*	mg/Kg-dry	1	7/2/2013
Dalapon	ND	0.041		mg/Kg-dry	1	7/2/2013
Dicamba	ND	0.0081		mg/Kg-dry	1	7/2/2013
Dichlorprop	ND	0.0081		mg/Kg-dry	1	7/2/2013
Dinoseb	ND	0.0081		mg/Kg-dry	1	7/2/2013
MCPA	ND	0.0081		mg/Kg-dry	1	7/2/2013
MCPP	ND	0.0041		mg/Kg-dry	1	7/2/2013
Pentachlorophenol	ND	0.012	*	mg/Kg-dry	1	7/2/2013
Picloram	ND	0.0081	*	mg/Kg-dry	1	7/2/2013
Mercury	**SW7471A**			Prep Date: **7/5/2013**		Analyst: **LB**
Mercury	ND	0.022		mg/Kg-dry	1	7/5/2013
Metals by ICP/MS	**SW6020 (SW3050B)**			Prep Date: **7/3/2013**		Analyst: **JG**
Aluminum	6500	260		mg/Kg-dry	100	7/3/2013
Antimony	ND	2.6		mg/Kg-dry	10	7/3/2013
Arsenic	7.9	1.3		mg/Kg-dry	10	7/3/2013
Barium	120	1.3		mg/Kg-dry	10	7/3/2013
Beryllium	1	0.64		mg/Kg-dry	10	7/3/2013
Cadmium	0.84	0.64		mg/Kg-dry	10	7/3/2013
Calcium	57000	77		mg/Kg-dry	10	7/3/2013
Chromium	13	1.3		mg/Kg-dry	10	7/3/2013
Cobalt	7.8	1.3		mg/Kg-dry	10	7/3/2013
Copper	25	3.2		mg/Kg-dry	10	7/3/2013
Iron	20000	390		mg/Kg-dry	100	7/3/2013
Lead	180	6.4		mg/Kg-dry	100	7/3/2013
Magnesium	20000	39		mg/Kg-dry	10	7/3/2013
Manganese	370	1.3		mg/Kg-dry	10	7/3/2013
Nickel	20	1.3		mg/Kg-dry	10	7/3/2013
Potassium	1000	39		mg/Kg-dry	10	7/3/2013
Selenium	ND	1.3		mg/Kg-dry	10	7/3/2013
Silver	ND	1.3		mg/Kg-dry	10	7/3/2013
Sodium	270	77		mg/Kg-dry	10	7/3/2013
Thallium	ND	1.3		mg/Kg-dry	10	7/3/2013
Vanadium	24	1.3		mg/Kg-dry	10	7/3/2013
Zinc	120	6.4		mg/Kg-dry	10	7/3/2013
Semivolatile Organic Compounds by GC/MS	**SW8270C (SW3550B)**			Prep Date: **7/1/2013**		Analyst: **DM**
Acenaphthene	ND	0.041		mg/Kg-dry	1	7/2/2013

Qualifiers:
ND - Not Detected at the Reporting Limit
J - Analyte detected below quantitation limits
B - Analyte detected in the associated Method Blank
HT - Sample received past holding time
* - Non-accredited parameter
RL - Reporting / Quantitation Limit for the analysis
S - Spike Recovery outside accepted recovery limits
R - RPD outside accepted recovery limits
E - Value above quantitation range
H - Holding time exceeded

STAT Analysis Corporation
2242 West Harrison St., Suite 200, Chicago, IL 60612-3766
Tel: (312) 733-0551 Fax: (312) 733-2386 STATinfo@STATAnalysis.com
Accreditation Numbers: IEPA ELAP 100445; ORELAP IL300001; AIHA 101160; NVLAP LabCode 101202

Date Reported: September 30, 2013
Date Printed: September 30, 2013

Client: Terracon Consultants, Inc.
Lab Order: 13060993
Project: A2137008, 650 West 83rd, Chicago, IL
Lab ID: 13060993-025

Client Sample ID: B-20 (1-3)
Collection Date 6/27/2013 8:35:00 AM
Matrix: Soil

Analyses	Result	RL	Qualifier	Units	DF	Date Analyzed
Semivolatile Organic Compounds by GC/MS	**SW8270C (SW3550B)**			Prep Date: **7/1/2013**		Analyst: **DM**
Acenaphthylene	ND	0.041		mg/Kg-dry	1	7/2/2013
Aniline	ND	0.41		mg/Kg-dry	1	7/2/2013
Anthracene	0.41	0.041		mg/Kg-dry	1	7/2/2013
Benz(a)anthracene	2.5	0.041		mg/Kg-dry	1	7/2/2013
Benzidine	ND	0.41		mg/Kg-dry	1	7/2/2013
Benzo(a)pyrene	1.8	0.041		mg/Kg-dry	1	7/2/2013
Benzo(b)fluoranthene	2.2	0.041		mg/Kg-dry	1	7/2/2013
Benzo(g,h,i)perylene	1	0.041		mg/Kg-dry	1	7/2/2013
Benzo(k)fluoranthene	1.4	0.041		mg/Kg-dry	1	7/2/2013
Benzoic acid	ND	1		mg/Kg-dry	1	7/2/2013
Benzyl alcohol	ND	0.21		mg/Kg-dry	1	7/2/2013
Bis(2-chloroethoxy)methane	ND	0.21		mg/Kg-dry	1	7/2/2013
Bis(2-chloroethyl)ether	ND	0.21		mg/Kg-dry	1	7/2/2013
Bis(2-ethylhexyl)phthalate	ND	1		mg/Kg-dry	1	7/2/2013
4-Bromophenyl phenyl ether	ND	0.21		mg/Kg-dry	1	7/2/2013
Butyl benzyl phthalate	ND	0.21		mg/Kg-dry	1	7/2/2013
Carbazole	ND	0.21		mg/Kg-dry	1	7/2/2013
4-Chloroaniline	ND	0.21		mg/Kg-dry	1	7/2/2013
4-Chloro-3-methylphenol	ND	0.41		mg/Kg-dry	1	7/2/2013
2-Chloronaphthalene	ND	0.21		mg/Kg-dry	1	7/2/2013
2-Chlorophenol	ND	0.21		mg/Kg-dry	1	7/2/2013
4-Chlorophenyl phenyl ether	ND	0.21		mg/Kg-dry	1	7/2/2013
Chrysene	2.8	0.041		mg/Kg-dry	1	7/2/2013
Dibenz(a,h)anthracene	0.59	0.041		mg/Kg-dry	1	7/2/2013
Dibenzofuran	ND	0.21		mg/Kg-dry	1	7/2/2013
1,2-Dichlorobenzene	ND	0.21		mg/Kg-dry	1	7/2/2013
1,3-Dichlorobenzene	ND	0.21		mg/Kg-dry	1	7/2/2013
1,4-Dichlorobenzene	ND	0.21		mg/Kg-dry	1	7/2/2013
3,3'-Dichlorobenzidine	ND	0.21		mg/Kg-dry	1	7/2/2013
2,4-Dichlorophenol	ND	0.21		mg/Kg-dry	1	7/2/2013
Diethyl phthalate	ND	0.21		mg/Kg-dry	1	7/2/2013
2,4-Dimethylphenol	ND	0.21		mg/Kg-dry	1	7/2/2013
Dimethyl phthalate	ND	0.21		mg/Kg-dry	1	7/2/2013
4,6-Dinitro-2-methylphenol	ND	0.41		mg/Kg-dry	1	7/2/2013
2,4-Dinitrophenol	ND	1		mg/Kg-dry	1	7/2/2013
2,4-Dinitrotoluene	ND	0.041		mg/Kg-dry	1	7/2/2013
2,6-Dinitrotoluene	ND	0.041		mg/Kg-dry	1	7/2/2013
Di-n-butyl phthalate	ND	0.21		mg/Kg-dry	1	7/2/2013

Qualifiers:
ND - Not Detected at the Reporting Limit
J - Analyte detected below quantitation limits
B - Analyte detected in the associated Method Blank
HT - Sample received past holding time
* - Non-accredited parameter
RL - Reporting / Quantitation Limit for the analysis
S - Spike Recovery outside accepted recovery limits
R - RPD outside accepted recovery limits
E - Value above quantitation range
H - Holding time exceeded

STAT Analysis Corporation
2242 West Harrison St., Suite 200, Chicago, IL 60612-3766
Tel: (312) 733-0551 Fax: (312) 733-2386 STATinfo@STATAnalysis.com
Accreditation Numbers: IEPA ELAP 100445; ORELAP IL300001; AIHA 101160; NVLAP LabCode 101202

Date Reported: September 30, 2013
Date Printed: September 30, 2013

Client: Terracon Consultants, Inc.
Lab Order: 13060993
Project: A2137008, 650 West 83rd, Chicago, IL
Lab ID: 13060993-025

Client Sample ID: B-20 (1-3)
Collection Date 6/27/2013 8:35:00 AM
Matrix: Soil

Analyses	Result	RL	Qualifier	Units	DF	Date Analyzed
Semivolatile Organic Compounds by GC/MS	**SW8270C (SW3550B)**			Prep Date: **7/1/2013**		Analyst: **DM**
Di-n-octyl phthalate	ND	0.21		mg/Kg-dry	1	7/2/2013
Fluoranthene	3.8	0.041		mg/Kg-dry	1	7/2/2013
Fluorene	ND	0.041		mg/Kg-dry	1	7/2/2013
Hexachlorobenzene	ND	0.21		mg/Kg-dry	1	7/2/2013
Hexachlorobutadiene	ND	0.21		mg/Kg-dry	1	7/2/2013
Hexachlorocyclopentadiene	ND	0.21		mg/Kg-dry	1	7/2/2013
Hexachloroethane	ND	0.21		mg/Kg-dry	1	7/2/2013
Indeno(1,2,3-cd)pyrene	0.93	0.041		mg/Kg-dry	1	7/2/2013
Isophorone	ND	0.21		mg/Kg-dry	1	7/2/2013
2-Methylnaphthalene	ND	0.21		mg/Kg-dry	1	7/2/2013
2-Methylphenol	ND	0.21		mg/Kg-dry	1	7/2/2013
4-Methylphenol	ND	0.21		mg/Kg-dry	1	7/2/2013
Naphthalene	ND	0.041		mg/Kg-dry	1	7/2/2013
2-Nitroaniline	ND	0.21		mg/Kg-dry	1	7/2/2013
3-Nitroaniline	ND	0.21		mg/Kg-dry	1	7/2/2013
4-Nitroaniline	ND	0.21		mg/Kg-dry	1	7/2/2013
2-Nitrophenol	ND	0.21		mg/Kg-dry	1	7/2/2013
4-Nitrophenol	ND	0.41		mg/Kg-dry	1	7/2/2013
Nitrobenzene	ND	0.041		mg/Kg-dry	1	7/2/2013
N-Nitrosodi-n-propylamine	ND	0.041		mg/Kg-dry	1	7/2/2013
N-Nitrosodimethylamine	ND	0.21		mg/Kg-dry	1	7/2/2013
N-Nitrosodiphenylamine	ND	0.041		mg/Kg-dry	1	7/2/2013
2, 2'-oxybis(1-Chloropropane)	ND	0.21		mg/Kg-dry	1	7/2/2013
Pentachlorophenol	ND	0.083		mg/Kg-dry	1	7/2/2013
Phenanthrene	1.5	0.041		mg/Kg-dry	1	7/2/2013
Phenol	ND	0.21		mg/Kg-dry	1	7/2/2013
Pyrene	3.7	0.041		mg/Kg-dry	1	7/2/2013
Pyridine	ND	0.83		mg/Kg-dry	1	7/2/2013
1,2,4-Trichlorobenzene	ND	0.21		mg/Kg-dry	1	7/2/2013
2,4,5-Trichlorophenol	ND	0.21		mg/Kg-dry	1	7/2/2013
2,4,6-Trichlorophenol	ND	0.21		mg/Kg-dry	1	7/2/2013
Volatile Organic Compounds by GC/MS	**SW5035/8260B**			Prep Date: **7/1/2013**		Analyst: **PS**
Acetone	ND	0.073		mg/Kg-dry	1	7/1/2013
Benzene	ND	0.0049		mg/Kg-dry	1	7/1/2013
Bromodichloromethane	ND	0.0049		mg/Kg-dry	1	7/1/2013
Bromoform	ND	0.0049		mg/Kg-dry	1	7/1/2013
Bromomethane	ND	0.0097		mg/Kg-dry	1	7/1/2013
2-Butanone	ND	0.073		mg/Kg-dry	1	7/1/2013

Qualifiers:
ND - Not Detected at the Reporting Limit
J - Analyte detected below quantitation limits
B - Analyte detected in the associated Method Blank
HT - Sample received past holding time
* - Non-accredited parameter
RL - Reporting / Quantitation Limit for the analysis
S - Spike Recovery outside accepted recovery limits
R - RPD outside accepted recovery limits
E - Value above quantitation range
H - Holding time exceeded

STAT Analysis Corporation
2242 West Harrison St., Suite 200, Chicago, IL 60612-3766
Tel: (312) 733-0551 Fax: (312) 733-2386 STATinfo@STATAnalysis.com
Accreditation Numbers: IEPA ELAP 100445; ORELAP IL300001; AIHA 101160; NVLAP LabCode 101202

Date Reported: September 30, 2013
Date Printed: September 30, 2013

Client: Terracon Consultants, Inc.
Lab Order: 13060993
Project: A2137008, 650 West 83rd, Chicago, IL
Lab ID: 13060993-025

Client Sample ID: B-20 (1-3)
Collection Date 6/27/2013 8:35:00 AM
Matrix: Soil

Analyses	Result	RL	Qualifier	Units	DF	Date Analyzed
Volatile Organic Compounds by GC/MS	**SW5035/8260B**			Prep Date: **7/1/2013**		Analyst: **PS**
Carbon disulfide	ND	0.049		mg/Kg-dry	1	7/1/2013
Carbon tetrachloride	ND	0.0049		mg/Kg-dry	1	7/1/2013
Chlorobenzene	ND	0.0049		mg/Kg-dry	1	7/1/2013
Chloroethane	ND	0.0097		mg/Kg-dry	1	7/1/2013
Chloroform	ND	0.0049		mg/Kg-dry	1	7/1/2013
Chloromethane	ND	0.0097		mg/Kg-dry	1	7/1/2013
Dibromochloromethane	ND	0.0049		mg/Kg-dry	1	7/1/2013
1,1-Dichloroethane	ND	0.0049		mg/Kg-dry	1	7/1/2013
1,2-Dichloroethane	ND	0.0049		mg/Kg-dry	1	7/1/2013
1,1-Dichloroethene	ND	0.0049		mg/Kg-dry	1	7/1/2013
cis-1,2-Dichloroethene	ND	0.0049		mg/Kg-dry	1	7/1/2013
trans-1,2-Dichloroethene	ND	0.0049		mg/Kg-dry	1	7/1/2013
1,2-Dichloropropane	ND	0.0049		mg/Kg-dry	1	7/1/2013
cis-1,3-Dichloropropene	ND	0.002		mg/Kg-dry	1	7/1/2013
trans-1,3-Dichloropropene	ND	0.002		mg/Kg-dry	1	7/1/2013
Ethylbenzene	ND	0.0049		mg/Kg-dry	1	7/1/2013
2-Hexanone	ND	0.02		mg/Kg-dry	1	7/1/2013
4-Methyl-2-pentanone	ND	0.02		mg/Kg-dry	1	7/1/2013
Methylene chloride	ND	0.0097		mg/Kg-dry	1	7/1/2013
Methyl tert-butyl ether	ND	0.0049		mg/Kg-dry	1	7/1/2013
Styrene	ND	0.0049		mg/Kg-dry	1	7/1/2013
1,1,2,2-Tetrachloroethane	ND	0.0049		mg/Kg-dry	1	7/1/2013
Tetrachloroethene	ND	0.0049		mg/Kg-dry	1	7/1/2013
Toluene	ND	0.0049		mg/Kg-dry	1	7/1/2013
1,1,1-Trichloroethane	ND	0.0049		mg/Kg-dry	1	7/1/2013
1,1,2-Trichloroethane	ND	0.0049		mg/Kg-dry	1	7/1/2013
Trichloroethene	ND	0.0049		mg/Kg-dry	1	7/1/2013
Vinyl chloride	ND	0.0049		mg/Kg-dry	1	7/1/2013
Xylenes, Total	ND	0.015		mg/Kg-dry	1	7/1/2013
Cyanide, Total	**SW9012A**			Prep Date: **7/1/2013**		Analyst: **YZ**
Cyanide	ND	0.31		mg/Kg-dry	1	7/2/2013
pH (25 °C)	**SW9045C**			Prep Date: **6/29/2013**		Analyst: **PBG**
pH	8.1			pH Units	1	6/29/2013
Percent Moisture	**D2974**			Prep Date: **7/2/2013**		Analyst: **SDA**
Percent Moisture	18.9	0.2	*	wt%	1	7/2/2013

Qualifiers:
ND - Not Detected at the Reporting Limit
J - Analyte detected below quantitation limits
B - Analyte detected in the associated Method Blank
HT - Sample received past holding time
* - Non-accredited parameter
RL - Reporting / Quantitation Limit for the analysis
S - Spike Recovery outside accepted recovery limits
R - RPD outside accepted recovery limits
E - Value above quantitation range
H - Holding time exceeded

STAT Analysis Corporation
2242 West Harrison St., Suite 200, Chicago, IL 60612-3766
Tel: (312) 733-0551 Fax: (312) 733-2386 STATinfo@STATAnalysis.com
Accreditation Numbers: IEPA ELAP 100445; ORELAP IL300001; AIHA 101160; NVLAP LabCode 101202

Date Reported: September 30, 2013
Date Printed: September 30, 2013

Client: Terracon Consultants, Inc.
Lab Order: 13060993
Project: A2137008, 650 West 83rd, Chicago, IL
Lab ID: 13060993-026

Client Sample ID: B-20 (4-6)
Collection Date 6/27/2013 8:25:00 AM
Matrix: Soil

Analyses	Result	RL	Qualifier	Units	DF	Date Analyzed
Mercury	**SW7471A**			Prep Date: **7/5/2013**		Analyst: **LB**
Mercury	ND	0.026		mg/Kg-dry	1	7/5/2013
Metals by ICP/MS	**SW6020 (SW3050B)**			Prep Date: **7/2/2013**		Analyst: **JG**
Arsenic	8.7	1.4		mg/Kg-dry	10	7/3/2013
Barium	90	1.4		mg/Kg-dry	10	7/3/2013
Cadmium	3	0.69		mg/Kg-dry	10	7/3/2013
Chromium	12	1.4		mg/Kg-dry	10	7/3/2013
Lead	31	0.69		mg/Kg-dry	10	7/3/2013
Selenium	1.7	1.4		mg/Kg-dry	10	7/3/2013
Silver	ND	1.4		mg/Kg-dry	10	7/3/2013
Semivolatile Organic Compounds by GC/MS	**SW8270C (SW3550B)**			Prep Date: **7/1/2013**		Analyst: **DM**
Acenaphthene	ND	0.048		mg/Kg-dry	1	7/2/2013
Acenaphthylene	ND	0.048		mg/Kg-dry	1	7/2/2013
Anthracene	ND	0.048		mg/Kg-dry	1	7/2/2013
Benz(a)anthracene	0.13	0.048		mg/Kg-dry	1	7/2/2013
Benzo(a)pyrene	0.14	0.048		mg/Kg-dry	1	7/2/2013
Benzo(b)fluoranthene	0.075	0.048		mg/Kg-dry	1	7/2/2013
Benzo(g,h,i)perylene	0.09	0.048		mg/Kg-dry	1	7/2/2013
Benzo(k)fluoranthene	0.12	0.048		mg/Kg-dry	1	7/2/2013
Chrysene	0.17	0.048		mg/Kg-dry	1	7/2/2013
Dibenz(a,h)anthracene	ND	0.048		mg/Kg-dry	1	7/2/2013
Fluoranthene	0.18	0.048		mg/Kg-dry	1	7/2/2013
Fluorene	ND	0.048		mg/Kg-dry	1	7/2/2013
Indeno(1,2,3-cd)pyrene	0.053	0.048		mg/Kg-dry	1	7/2/2013
Naphthalene	ND	0.048		mg/Kg-dry	1	7/2/2013
Phenanthrene	0.11	0.048		mg/Kg-dry	1	7/2/2013
Pyrene	0.29	0.048		mg/Kg-dry	1	7/2/2013
BTEX by GC/MS	**SW5035/8260B**			Prep Date: **7/1/2013**		Analyst: **PS**
Benzene	ND	0.0078		mg/Kg-dry	1	7/3/2013
Ethylbenzene	ND	0.0078		mg/Kg-dry	1	7/3/2013
Toluene	ND	0.0078		mg/Kg-dry	1	7/3/2013
Xylenes, Total	ND	0.023		mg/Kg-dry	1	7/3/2013
Percent Moisture	**D2974**			Prep Date: **7/2/2013**		Analyst: **SDA**
Percent Moisture	31.2	0.2	*	wt%	1	7/2/2013

Qualifiers:
ND - Not Detected at the Reporting Limit
J - Analyte detected below quantitation limits
B - Analyte detected in the associated Method Blank
HT - Sample received past holding time
* - Non-accredited parameter
RL - Reporting / Quantitation Limit for the analysis
S - Spike Recovery outside accepted recovery limits
R - RPD outside accepted recovery limits
E - Value above quantitation range
H - Holding time exceeded

STAT Analysis Corporation
2242 West Harrison St., Suite 200, Chicago, IL 60612-3766
Tel: (312) 733-0551 Fax: (312) 733-2386 STATinfo@STATAnalysis.com
Accreditation Numbers: IEPA ELAP 100445; ORELAP IL300001; AIHA 101160; NVLAP LabCode 101202

Date Reported: September 30, 2013
Date Printed: September 30, 2013

Client: Terracon Consultants, Inc.
Lab Order: 13060993
Project: A2137008, 650 West 83rd, Chicago, IL
Lab ID: 13060993-027

Client Sample ID: B-21 (1-3)
Collection Date 6/27/2013 8:00:00 AM
Matrix: Soil

Analyses	Result	RL	Qualifier	Units	DF	Date Analyzed
Mercury	**SW7471A**			Prep Date: **7/5/2013**		Analyst: **LB**
Mercury	ND	0.023		mg/Kg-dry	1	7/5/2013
Metals by ICP/MS	**SW6020 (SW3050B)**			Prep Date: **7/2/2013**		Analyst: **JG**
Arsenic	5.6	1.2		mg/Kg-dry	10	7/3/2013
Barium	180	1.2		mg/Kg-dry	10	7/3/2013
Cadmium	1.1	0.6		mg/Kg-dry	10	7/3/2013
Chromium	10	1.2		mg/Kg-dry	10	7/3/2013
Lead	12	0.6		mg/Kg-dry	10	7/3/2013
Selenium	ND	1.2		mg/Kg-dry	10	7/3/2013
Silver	ND	1.2		mg/Kg-dry	10	7/3/2013
Semivolatile Organic Compounds by GC/MS	**SW8270C (SW3550B)**			Prep Date: **7/1/2013**		Analyst: **DM**
Acenaphthene	ND	0.043		mg/Kg-dry	1	7/2/2013
Acenaphthylene	ND	0.043		mg/Kg-dry	1	7/2/2013
Anthracene	ND	0.043		mg/Kg-dry	1	7/2/2013
Benz(a)anthracene	ND	0.043		mg/Kg-dry	1	7/2/2013
Benzo(a)pyrene	ND	0.043		mg/Kg-dry	1	7/2/2013
Benzo(b)fluoranthene	ND	0.043		mg/Kg-dry	1	7/2/2013
Benzo(g,h,i)perylene	ND	0.043		mg/Kg-dry	1	7/2/2013
Benzo(k)fluoranthene	ND	0.043		mg/Kg-dry	1	7/2/2013
Chrysene	ND	0.043		mg/Kg-dry	1	7/2/2013
Dibenz(a,h)anthracene	ND	0.043		mg/Kg-dry	1	7/2/2013
Fluoranthene	0.05	0.043		mg/Kg-dry	1	7/2/2013
Fluorene	ND	0.043		mg/Kg-dry	1	7/2/2013
Indeno(1,2,3-cd)pyrene	ND	0.043		mg/Kg-dry	1	7/2/2013
Naphthalene	ND	0.043		mg/Kg-dry	1	7/2/2013
Phenanthrene	0.12	0.043		mg/Kg-dry	1	7/2/2013
Pyrene	0.044	0.043		mg/Kg-dry	1	7/2/2013
BTEX by GC/MS	**SW5035/8260B**			Prep Date: **7/1/2013**		Analyst: **PS**
Benzene	ND	0.0054		mg/Kg-dry	1	7/3/2013
Ethylbenzene	ND	0.0054		mg/Kg-dry	1	7/3/2013
Toluene	0.0055	0.0054		mg/Kg-dry	1	7/3/2013
Xylenes, Total	ND	0.016		mg/Kg-dry	1	7/3/2013
Percent Moisture	**D2974**			Prep Date: **7/2/2013**		Analyst: **SDA**
Percent Moisture	24.1	0.2	*	wt%	1	7/2/2013

Qualifiers:
ND - Not Detected at the Reporting Limit
J - Analyte detected below quantitation limits
B - Analyte detected in the associated Method Blank
HT - Sample received past holding time
* - Non-accredited parameter
RL - Reporting / Quantitation Limit for the analysis
S - Spike Recovery outside accepted recovery limits
R - RPD outside accepted recovery limits
E - Value above quantitation range
H - Holding time exceeded

STAT Analysis Corporation
2242 West Harrison St., Suite 200, Chicago, IL 60612-3766
Tel: (312) 733-0551 Fax: (312) 733-2386 STATinfo@STATAnalysis.com
Accreditation Numbers: IEPA ELAP 100445; ORELAP IL300001; AIHA 101160; NVLAP LabCode 101202

Date Reported: September 30, 2013
Date Printed: September 30, 2013

Client: Terracon Consultants, Inc.
Lab Order: 13060993
Project: A2137008, 650 West 83rd, Chicago, IL
Lab ID: 13060993-028

Client Sample ID: B-21 (4-6)
Collection Date 6/27/2013 8:10:00 AM
Matrix: Soil

Analyses	Result	RL	Qualifier	Units	DF	Date Analyzed
Mercury	**SW7471A**			Prep Date: **7/5/2013**		Analyst: **LB**
Mercury	ND	0.024		mg/Kg-dry	1	7/5/2013
Metals by ICP/MS	**SW6020 (SW3050B)**			Prep Date: **7/3/2013**		Analyst: **JG**
Arsenic	2.2	1.3		mg/Kg-dry	10	7/3/2013
Barium	18	1.3		mg/Kg-dry	10	7/3/2013
Cadmium	ND	0.64		mg/Kg-dry	10	7/3/2013
Chromium	7.4	1.3		mg/Kg-dry	10	7/3/2013
Lead	6.1	0.64		mg/Kg-dry	10	7/5/2013
Selenium	ND	1.3		mg/Kg-dry	10	7/3/2013
Silver	ND	1.3		mg/Kg-dry	10	7/3/2013
Semivolatile Organic Compounds by GC/MS	**SW8270C (SW3550B)**			Prep Date: **7/1/2013**		Analyst: **DM**
Acenaphthene	ND	0.041		mg/Kg-dry	1	7/2/2013
Acenaphthylene	ND	0.041		mg/Kg-dry	1	7/2/2013
Anthracene	ND	0.041		mg/Kg-dry	1	7/2/2013
Benz(a)anthracene	ND	0.041		mg/Kg-dry	1	7/2/2013
Benzo(a)pyrene	ND	0.041		mg/Kg-dry	1	7/2/2013
Benzo(b)fluoranthene	ND	0.041		mg/Kg-dry	1	7/2/2013
Benzo(g,h,i)perylene	ND	0.041		mg/Kg-dry	1	7/2/2013
Benzo(k)fluoranthene	ND	0.041		mg/Kg-dry	1	7/2/2013
Chrysene	ND	0.041		mg/Kg-dry	1	7/2/2013
Dibenz(a,h)anthracene	ND	0.041		mg/Kg-dry	1	7/2/2013
Fluoranthene	ND	0.041		mg/Kg-dry	1	7/2/2013
Fluorene	ND	0.041		mg/Kg-dry	1	7/2/2013
Indeno(1,2,3-cd)pyrene	ND	0.041		mg/Kg-dry	1	7/2/2013
Naphthalene	ND	0.041		mg/Kg-dry	1	7/2/2013
Phenanthrene	ND	0.041		mg/Kg-dry	1	7/2/2013
Pyrene	ND	0.041		mg/Kg-dry	1	7/2/2013
BTEX by GC/MS	**SW5035/8260B**			Prep Date: **7/1/2013**		Analyst: **PS**
Benzene	ND	0.0061		mg/Kg-dry	1	7/3/2013
Ethylbenzene	ND	0.0061		mg/Kg-dry	1	7/3/2013
Toluene	ND	0.0061		mg/Kg-dry	1	7/3/2013
Xylenes, Total	ND	0.018		mg/Kg-dry	1	7/3/2013
Percent Moisture	**D2974**			Prep Date: **7/2/2013**		Analyst: **SDA**
Percent Moisture	18.9	0.2	*	wt%	1	7/2/2013

Qualifiers:
ND - Not Detected at the Reporting Limit
J - Analyte detected below quantitation limits
B - Analyte detected in the associated Method Blank
HT - Sample received past holding time
* - Non-accredited parameter
RL - Reporting / Quantitation Limit for the analysis
S - Spike Recovery outside accepted recovery limits
R - RPD outside accepted recovery limits
E - Value above quantitation range
H - Holding time exceeded

STAT Analysis Corporation
2242 West Harrison St., Suite 200, Chicago, IL 60612-3766
Tel: (312) 733-0551 Fax: (312) 733-2386 STATinfo@STATAnalysis.com
Accreditation Numbers: IEPA ELAP 100445; ORELAP IL300001; AIHA 101160; NVLAP LabCode 101202

Date Reported: September 30, 2013
Date Printed: September 30, 2013

Client: Terracon Consultants, Inc.
Lab Order: 13060993
Project: A2137008, 650 West 83rd, Chicago, IL
Lab ID: 13060993-029

Client Sample ID: B-11 (1-3)
Collection Date 6/27/2013 7:40:00 AM
Matrix: Soil

Analyses	Result	RL	Qualifier	Units	DF	Date Analyzed
Mercury	**SW7471A**			Prep Date: **7/5/2013**		Analyst: **LB**
Mercury	ND	0.024		mg/Kg-dry	1	7/5/2013
Metals by ICP/MS	**SW6020 (SW3050B)**			Prep Date: **7/3/2013**		Analyst: **JG**
Arsenic	13	1.1		mg/Kg-dry	10	7/3/2013
Barium	920	1.1		mg/Kg-dry	10	7/3/2013
Cadmium	3.1	0.54		mg/Kg-dry	10	7/3/2013
Chromium	14	1.1		mg/Kg-dry	10	7/3/2013
Lead	33000	11		mg/Kg-dry	200	7/5/2013
Selenium	1.4	1.1		mg/Kg-dry	10	7/3/2013
Silver	ND	1.1		mg/Kg-dry	10	7/3/2013
TCLP Metals by ICP/MS	**SW1311/6020 (SW3005A)**			Prep Date: **7/17/2013**		Analyst: **JG**
Lead	66	0.1		mg/L	100	7/18/2013
Semivolatile Organic Compounds by GC/MS	**SW8270C (SW3550B)**			Prep Date: **7/1/2013**		Analyst: **DM**
Acenaphthene	ND	0.042		mg/Kg-dry	1	7/2/2013
Acenaphthylene	ND	0.042		mg/Kg-dry	1	7/2/2013
Anthracene	ND	0.042		mg/Kg-dry	1	7/2/2013
Benz(a)anthracene	0.068	0.042		mg/Kg-dry	1	7/2/2013
Benzo(a)pyrene	0.064	0.042		mg/Kg-dry	1	7/2/2013
Benzo(b)fluoranthene	0.062	0.042		mg/Kg-dry	1	7/2/2013
Benzo(g,h,i)perylene	0.071	0.042		mg/Kg-dry	1	7/2/2013
Benzo(k)fluoranthene	0.086	0.042		mg/Kg-dry	1	7/2/2013
Chrysene	0.083	0.042		mg/Kg-dry	1	7/2/2013
Dibenz(a,h)anthracene	ND	0.042		mg/Kg-dry	1	7/2/2013
Fluoranthene	0.099	0.042		mg/Kg-dry	1	7/2/2013
Fluorene	ND	0.042		mg/Kg-dry	1	7/2/2013
Indeno(1,2,3-cd)pyrene	0.061	0.042		mg/Kg-dry	1	7/2/2013
Naphthalene	ND	0.042		mg/Kg-dry	1	7/2/2013
Phenanthrene	0.1	0.042		mg/Kg-dry	1	7/2/2013
Pyrene	0.12	0.042		mg/Kg-dry	1	7/2/2013
BTEX by GC/MS	**SW5035/8260B**			Prep Date: **7/1/2013**		Analyst: **PS**
Benzene	ND	0.0075		mg/Kg-dry	1	7/3/2013
Ethylbenzene	ND	0.0075		mg/Kg-dry	1	7/3/2013
Toluene	ND	0.0075		mg/Kg-dry	1	7/3/2013
Xylenes, Total	ND	0.022		mg/Kg-dry	1	7/3/2013
Percent Moisture	**D2974**			Prep Date: **7/2/2013**		Analyst: **SDA**
Percent Moisture	22.2	0.2	*	wt%	1	7/2/2013

Qualifiers:
ND - Not Detected at the Reporting Limit
J - Analyte detected below quantitation limits
B - Analyte detected in the associated Method Blank
HT - Sample received past holding time
* - Non-accredited parameter
RL - Reporting / Quantitation Limit for the analysis
S - Spike Recovery outside accepted recovery limits
R - RPD outside accepted recovery limits
E - Value above quantitation range
H - Holding time exceeded

STAT Analysis Corporation
2242 West Harrison St., Suite 200, Chicago, IL 60612-3766
Tel: (312) 733-0551 Fax: (312) 733-2386 STATinfo@STATAnalysis.com
Accreditation Numbers: IEPA ELAP 100445; ORELAP IL300001; AIHA 101160; NVLAP LabCode 101202

Date Reported: September 30, 2013
Date Printed: September 30, 2013

Client: Terracon Consultants, Inc.
Lab Order: 13060993
Project: A2137008, 650 West 83rd, Chicago, IL
Lab ID: 13060993-030

Client Sample ID: B-11 (4-6)
Collection Date 6/27/2013 7:45:00 AM
Matrix: Soil

Analyses	Result	RL	Qualifier	Units	DF	Date Analyzed
PCBs	**SW8082 (SW3550B)**			Prep Date: **6/28/2013**		Analyst: **GVC**
Aroclor 1016	ND	0.097		mg/Kg-dry	1	6/30/2013
Aroclor 1221	ND	0.097		mg/Kg-dry	1	6/30/2013
Aroclor 1232	ND	0.097		mg/Kg-dry	1	6/30/2013
Aroclor 1242	ND	0.097		mg/Kg-dry	1	6/30/2013
Aroclor 1248	ND	0.097		mg/Kg-dry	1	6/30/2013
Aroclor 1254	ND	0.097		mg/Kg-dry	1	6/30/2013
Aroclor 1260	ND	0.097		mg/Kg-dry	1	6/30/2013
Pesticides	**SW8081 (SW3550B)**			Prep Date: **6/28/2013**		Analyst: **GVC**
4,4'-DDD	ND	0.002		mg/Kg-dry	1	6/30/2013
4,4'-DDE	ND	0.002		mg/Kg-dry	1	6/30/2013
4,4'-DDT	ND	0.002		mg/Kg-dry	1	6/30/2013
Aldrin	ND	0.002		mg/Kg-dry	1	6/30/2013
alpha-BHC	ND	0.002		mg/Kg-dry	1	6/30/2013
alpha-Chlordane	ND	0.002		mg/Kg-dry	1	6/30/2013
beta-BHC	ND	0.002		mg/Kg-dry	1	6/30/2013
Chlordane	ND	0.02		mg/Kg-dry	1	6/30/2013
delta-BHC	ND	0.002		mg/Kg-dry	1	6/30/2013
Dieldrin	ND	0.002		mg/Kg-dry	1	6/30/2013
Endosulfan I	ND	0.002		mg/Kg-dry	1	6/30/2013
Endosulfan II	ND	0.002		mg/Kg-dry	1	6/30/2013
Endosulfan sulfate	ND	0.002		mg/Kg-dry	1	6/30/2013
Endrin	ND	0.002		mg/Kg-dry	1	6/30/2013
Endrin aldehyde	ND	0.002		mg/Kg-dry	1	6/30/2013
Endrin ketone	ND	0.002		mg/Kg-dry	1	6/30/2013
gamma-BHC	ND	0.002		mg/Kg-dry	1	6/30/2013
gamma-Chlordane	ND	0.002		mg/Kg-dry	1	6/30/2013
Heptachlor	ND	0.002		mg/Kg-dry	1	6/30/2013
Heptachlor epoxide	ND	0.002		mg/Kg-dry	1	6/30/2013
Methoxychlor	ND	0.002		mg/Kg-dry	1	6/30/2013
Toxaphene	ND	0.04		mg/Kg-dry	1	6/30/2013
Herbicides in Soil	**SW8321A (SW3550B)**			Prep Date: **7/1/2013**		Analyst: **MEP**
2,4,5-T	ND	0.004		mg/Kg-dry	1	7/2/2013
2,4,5-TP (Silvex)	ND	0.004		mg/Kg-dry	1	7/2/2013
2,4-D	ND	0.004		mg/Kg-dry	1	7/2/2013
2,4-DB	ND	0.0082		mg/Kg-dry	1	7/2/2013
3,5-Dichlorobenzoic Acid	ND	0.004	*	mg/Kg-dry	1	7/2/2013
4-Nitrophenol	ND	0.04	*	mg/Kg-dry	1	7/2/2013

Qualifiers:
ND - Not Detected at the Reporting Limit
J - Analyte detected below quantitation limits
B - Analyte detected in the associated Method Blank
HT - Sample received past holding time
* - Non-accredited parameter
RL - Reporting / Quantitation Limit for the analysis
S - Spike Recovery outside accepted recovery limits
R - RPD outside accepted recovery limits
E - Value above quantitation range
H - Holding time exceeded

STAT Analysis Corporation
2242 West Harrison St., Suite 200, Chicago, IL 60612-3766
Tel: (312) 733-0551 Fax: (312) 733-2386 STATinfo@STATAnalysis.com
Accreditation Numbers: IEPA ELAP 100445; ORELAP IL300001; AIHA 101160; NVLAP LabCode 101202

Date Reported: September 30, 2013
Date Printed: September 30, 2013

Client: Terracon Consultants, Inc.
Lab Order: 13060993
Project: A2137008, 650 West 83rd, Chicago, IL
Lab ID: 13060993-030

Client Sample ID: B-11 (4-6)
Collection Date 6/27/2013 7:45:00 AM
Matrix: Soil

Analyses	Result	RL	Qualifier	Units	DF	Date Analyzed
Herbicides in Soil	**SW8321A (SW3550B)**			Prep Date: **7/1/2013**		Analyst: **MEP**
Acifluorfen	ND	0.004	*	mg/Kg-dry	1	7/2/2013
Chloramben	ND	0.004	*	mg/Kg-dry	1	7/2/2013
Dalapon	ND	0.04		mg/Kg-dry	1	7/2/2013
Dicamba	ND	0.0082		mg/Kg-dry	1	7/2/2013
Dichlorprop	ND	0.0082		mg/Kg-dry	1	7/2/2013
Dinoseb	ND	0.0082		mg/Kg-dry	1	7/2/2013
MCPA	ND	0.0082		mg/Kg-dry	1	7/2/2013
MCPP	ND	0.004		mg/Kg-dry	1	7/2/2013
Pentachlorophenol	ND	0.012	*	mg/Kg-dry	1	7/2/2013
Picloram	ND	0.0082	*	mg/Kg-dry	1	7/2/2013
Mercury	**SW7471A**			Prep Date: **7/5/2013**		Analyst: **LB**
Mercury	ND	0.019		mg/Kg-dry	1	7/5/2013
Metals by ICP/MS	**SW6020 (SW3050B)**			Prep Date: **7/3/2013**		Analyst: **JG**
Aluminum	3500	23		mg/Kg-dry	10	7/3/2013
Antimony	ND	2.3		mg/Kg-dry	10	7/3/2013
Arsenic	3.6	1.2		mg/Kg-dry	10	7/3/2013
Barium	55	1.2		mg/Kg-dry	10	7/3/2013
Beryllium	0.65	0.58		mg/Kg-dry	10	7/3/2013
Cadmium	ND	0.58		mg/Kg-dry	10	7/3/2013
Calcium	86000	700		mg/Kg-dry	100	7/3/2013
Chromium	7.8	1.2		mg/Kg-dry	10	7/3/2013
Cobalt	5.7	1.2		mg/Kg-dry	10	7/3/2013
Copper	7.2	2.9		mg/Kg-dry	10	7/3/2013
Iron	12000	350		mg/Kg-dry	100	7/3/2013
Lead	320	5.8		mg/Kg-dry	100	7/3/2013
Magnesium	29000	35		mg/Kg-dry	10	7/3/2013
Manganese	390	1.2		mg/Kg-dry	10	7/3/2013
Nickel	11	1.2		mg/Kg-dry	10	7/3/2013
Potassium	390	35		mg/Kg-dry	10	7/3/2013
Selenium	ND	1.2		mg/Kg-dry	10	7/3/2013
Silver	ND	1.2		mg/Kg-dry	10	7/3/2013
Sodium	290	70		mg/Kg-dry	10	7/3/2013
Thallium	ND	1.2		mg/Kg-dry	10	7/3/2013
Vanadium	15	1.2		mg/Kg-dry	10	7/3/2013
Zinc	70	5.8		mg/Kg-dry	10	7/3/2013
TCLP Metals by ICP/MS	**SW1311/6020 (SW3005A)**			Prep Date: **9/24/2013**		Analyst: **JG**
Lead	1.7	0.005		mg/L	5	9/25/2013

Qualifiers:
ND - Not Detected at the Reporting Limit
J - Analyte detected below quantitation limits
B - Analyte detected in the associated Method Blank
HT - Sample received past holding time
* - Non-accredited parameter
RL - Reporting / Quantitation Limit for the analysis
S - Spike Recovery outside accepted recovery limits
R - RPD outside accepted recovery limits
E - Value above quantitation range
H - Holding time exceeded

STAT Analysis Corporation
2242 West Harrison St., Suite 200, Chicago, IL 60612-3766
Tel: (312) 733-0551 Fax: (312) 733-2386 STATinfo@STATAnalysis.com
Accreditation Numbers: IEPA ELAP 100445; ORELAP IL300001; AIHA 101160; NVLAP LabCode 101202

Date Reported: September 30, 2013
Date Printed: September 30, 2013

Client: Terracon Consultants, Inc.
Lab Order: 13060993
Project: A2137008, 650 West 83rd, Chicago, IL
Lab ID: 13060993-030

Client Sample ID: B-11 (4-6)
Collection Date 6/27/2013 7:45:00 AM
Matrix: Soil

Analyses	Result	RL	Qualifier	Units	DF	Date Analyzed
Semivolatile Organic Compounds by GC/MS	**SW8270C (SW3550B)**			Prep Date: **7/1/2013**		Analyst: **DM**
Acenaphthene	ND	0.04		mg/Kg-dry	1	7/3/2013
Acenaphthylene	ND	0.04		mg/Kg-dry	1	7/3/2013
Aniline	ND	0.4		mg/Kg-dry	1	7/3/2013
Anthracene	ND	0.04		mg/Kg-dry	1	7/3/2013
Benz(a)anthracene	0.19	0.04		mg/Kg-dry	1	7/3/2013
Benzidine	ND	0.4		mg/Kg-dry	1	7/3/2013
Benzo(a)pyrene	0.14	0.04		mg/Kg-dry	1	7/3/2013
Benzo(b)fluoranthene	0.13	0.04		mg/Kg-dry	1	7/3/2013
Benzo(g,h,i)perylene	0.1	0.04		mg/Kg-dry	1	7/3/2013
Benzo(k)fluoranthene	0.14	0.04		mg/Kg-dry	1	7/3/2013
Benzoic acid	ND	1		mg/Kg-dry	1	7/3/2013
Benzyl alcohol	ND	0.21		mg/Kg-dry	1	7/3/2013
Bis(2-chloroethoxy)methane	ND	0.21		mg/Kg-dry	1	7/3/2013
Bis(2-chloroethyl)ether	ND	0.21		mg/Kg-dry	1	7/3/2013
Bis(2-ethylhexyl)phthalate	ND	1		mg/Kg-dry	1	7/3/2013
4-Bromophenyl phenyl ether	ND	0.21		mg/Kg-dry	1	7/3/2013
Butyl benzyl phthalate	ND	0.21		mg/Kg-dry	1	7/3/2013
Carbazole	ND	0.21		mg/Kg-dry	1	7/3/2013
4-Chloroaniline	ND	0.21		mg/Kg-dry	1	7/3/2013
4-Chloro-3-methylphenol	ND	0.4		mg/Kg-dry	1	7/3/2013
2-Chloronaphthalene	ND	0.21		mg/Kg-dry	1	7/3/2013
2-Chlorophenol	ND	0.21		mg/Kg-dry	1	7/3/2013
4-Chlorophenyl phenyl ether	ND	0.21		mg/Kg-dry	1	7/3/2013
Chrysene	0.2	0.04		mg/Kg-dry	1	7/3/2013
Dibenz(a,h)anthracene	0.053	0.04		mg/Kg-dry	1	7/3/2013
Dibenzofuran	ND	0.21		mg/Kg-dry	1	7/3/2013
1,2-Dichlorobenzene	ND	0.21		mg/Kg-dry	1	7/3/2013
1,3-Dichlorobenzene	ND	0.21		mg/Kg-dry	1	7/3/2013
1,4-Dichlorobenzene	ND	0.21		mg/Kg-dry	1	7/3/2013
3,3'-Dichlorobenzidine	ND	0.21		mg/Kg-dry	1	7/3/2013
2,4-Dichlorophenol	ND	0.21		mg/Kg-dry	1	7/3/2013
Diethyl phthalate	ND	0.21		mg/Kg-dry	1	7/3/2013
2,4-Dimethylphenol	ND	0.21		mg/Kg-dry	1	7/3/2013
Dimethyl phthalate	ND	0.21		mg/Kg-dry	1	7/3/2013
4,6-Dinitro-2-methylphenol	ND	0.4		mg/Kg-dry	1	7/3/2013
2,4-Dinitrophenol	ND	1		mg/Kg-dry	1	7/3/2013
2,4-Dinitrotoluene	ND	0.04		mg/Kg-dry	1	7/3/2013
2,6-Dinitrotoluene	ND	0.04		mg/Kg-dry	1	7/3/2013

Qualifiers:
ND - Not Detected at the Reporting Limit
J - Analyte detected below quantitation limits
B - Analyte detected in the associated Method Blank
HT - Sample received past holding time
* - Non-accredited parameter
RL - Reporting / Quantitation Limit for the analysis
S - Spike Recovery outside accepted recovery limits
R - RPD outside accepted recovery limits
E - Value above quantitation range
H - Holding time exceeded

STAT Analysis Corporation
2242 West Harrison St., Suite 200, Chicago, IL 60612-3766
Tel: (312) 733-0551 Fax: (312) 733-2386 STATinfo@STATAnalysis.com
Accreditation Numbers: IEPA ELAP 100445; ORELAP IL300001; AIHA 101160; NVLAP LabCode 101202

Date Reported: September 30, 2013
Date Printed: September 30, 2013

Client: Terracon Consultants, Inc.
Lab Order: 13060993
Project: A2137008, 650 West 83rd, Chicago, IL
Lab ID: 13060993-030

Client Sample ID: B-11 (4-6)
Collection Date 6/27/2013 7:45:00 AM
Matrix: Soil

Analyses	Result	RL	Qualifier	Units	DF	Date Analyzed
Semivolatile Organic Compounds by GC/MS	**SW8270C (SW3550B)**			Prep Date: **7/1/2013**		Analyst: **DM**
Di-n-butyl phthalate	ND	0.21		mg/Kg-dry	1	7/3/2013
Di-n-octyl phthalate	ND	0.21		mg/Kg-dry	1	7/3/2013
Fluoranthene	0.26	0.04		mg/Kg-dry	1	7/3/2013
Fluorene	ND	0.04		mg/Kg-dry	1	7/3/2013
Hexachlorobenzene	ND	0.21		mg/Kg-dry	1	7/3/2013
Hexachlorobutadiene	ND	0.21		mg/Kg-dry	1	7/3/2013
Hexachlorocyclopentadiene	ND	0.21		mg/Kg-dry	1	7/3/2013
Hexachloroethane	ND	0.21		mg/Kg-dry	1	7/3/2013
Indeno(1,2,3-cd)pyrene	0.071	0.04		mg/Kg-dry	1	7/3/2013
Isophorone	ND	0.21		mg/Kg-dry	1	7/3/2013
2-Methylnaphthalene	ND	0.21		mg/Kg-dry	1	7/3/2013
2-Methylphenol	ND	0.21		mg/Kg-dry	1	7/3/2013
4-Methylphenol	ND	0.21		mg/Kg-dry	1	7/3/2013
Naphthalene	ND	0.04		mg/Kg-dry	1	7/3/2013
2-Nitroaniline	ND	0.21		mg/Kg-dry	1	7/3/2013
3-Nitroaniline	ND	0.21		mg/Kg-dry	1	7/3/2013
4-Nitroaniline	ND	0.21		mg/Kg-dry	1	7/3/2013
2-Nitrophenol	ND	0.21		mg/Kg-dry	1	7/3/2013
4-Nitrophenol	ND	0.4		mg/Kg-dry	1	7/3/2013
Nitrobenzene	ND	0.04		mg/Kg-dry	1	7/3/2013
N-Nitrosodi-n-propylamine	ND	0.04		mg/Kg-dry	1	7/3/2013
N-Nitrosodimethylamine	ND	0.21		mg/Kg-dry	1	7/3/2013
N-Nitrosodiphenylamine	ND	0.04		mg/Kg-dry	1	7/3/2013
2, 2'-oxybis(1-Chloropropane)	ND	0.21		mg/Kg-dry	1	7/3/2013
Pentachlorophenol	ND	0.081		mg/Kg-dry	1	7/3/2013
Phenanthrene	0.36	0.04		mg/Kg-dry	1	7/3/2013
Phenol	ND	0.21		mg/Kg-dry	1	7/3/2013
Pyrene	0.34	0.04		mg/Kg-dry	1	7/3/2013
Pyridine	ND	0.81		mg/Kg-dry	1	7/3/2013
1,2,4-Trichlorobenzene	ND	0.21		mg/Kg-dry	1	7/3/2013
2,4,5-Trichlorophenol	ND	0.21		mg/Kg-dry	1	7/3/2013
2,4,6-Trichlorophenol	ND	0.21		mg/Kg-dry	1	7/3/2013
Volatile Organic Compounds by GC/MS	**SW5035/8260B**			Prep Date: **7/1/2013**		Analyst: **PS**
Acetone	ND	0.081		mg/Kg-dry	1	7/3/2013
Benzene	ND	0.0054		mg/Kg-dry	1	7/3/2013
Bromodichloromethane	ND	0.0054		mg/Kg-dry	1	7/3/2013
Bromoform	ND	0.0054		mg/Kg-dry	1	7/3/2013
Bromomethane	ND	0.011		mg/Kg-dry	1	7/3/2013

Qualifiers:
ND - Not Detected at the Reporting Limit
J - Analyte detected below quantitation limits
B - Analyte detected in the associated Method Blank
HT - Sample received past holding time
* - Non-accredited parameter
RL - Reporting / Quantitation Limit for the analysis
S - Spike Recovery outside accepted recovery limits
R - RPD outside accepted recovery limits
E - Value above quantitation range
H - Holding time exceeded

STAT Analysis Corporation
2242 West Harrison St., Suite 200, Chicago, IL 60612-3766
Tel: (312) 733-0551 Fax: (312) 733-2386 STATinfo@STATAnalysis.com
Accreditation Numbers: IEPA ELAP 100445; ORELAP IL300001; AIHA 101160; NVLAP LabCode 101202

Date Reported: September 30, 2013
Date Printed: September 30, 2013

Client: Terracon Consultants, Inc.
Lab Order: 13060993
Project: A2137008, 650 West 83rd, Chicago, IL
Lab ID: 13060993-030

Client Sample ID: B-11 (4-6)
Collection Date 6/27/2013 7:45:00 AM
Matrix: Soil

Analyses	Result	RL	Qualifier	Units	DF	Date Analyzed
Volatile Organic Compounds by GC/MS	**SW5035/8260B**			Prep Date: **7/1/2013**		Analyst: **PS**
2-Butanone	ND	0.081		mg/Kg-dry	1	7/3/2013
Carbon disulfide	ND	0.054		mg/Kg-dry	1	7/3/2013
Carbon tetrachloride	ND	0.0054		mg/Kg-dry	1	7/3/2013
Chlorobenzene	ND	0.0054		mg/Kg-dry	1	7/3/2013
Chloroethane	ND	0.011		mg/Kg-dry	1	7/3/2013
Chloroform	ND	0.0054		mg/Kg-dry	1	7/3/2013
Chloromethane	ND	0.011		mg/Kg-dry	1	7/3/2013
Dibromochloromethane	ND	0.0054		mg/Kg-dry	1	7/3/2013
1,1-Dichloroethane	ND	0.0054		mg/Kg-dry	1	7/3/2013
1,2-Dichloroethane	ND	0.0054		mg/Kg-dry	1	7/3/2013
1,1-Dichloroethene	ND	0.0054		mg/Kg-dry	1	7/3/2013
cis-1,2-Dichloroethene	ND	0.0054		mg/Kg-dry	1	7/3/2013
trans-1,2-Dichloroethene	ND	0.0054		mg/Kg-dry	1	7/3/2013
1,2-Dichloropropane	ND	0.0054		mg/Kg-dry	1	7/3/2013
cis-1,3-Dichloropropene	ND	0.0022		mg/Kg-dry	1	7/3/2013
trans-1,3-Dichloropropene	ND	0.0022		mg/Kg-dry	1	7/3/2013
Ethylbenzene	ND	0.0054		mg/Kg-dry	1	7/3/2013
2-Hexanone	ND	0.022		mg/Kg-dry	1	7/3/2013
4-Methyl-2-pentanone	ND	0.022		mg/Kg-dry	1	7/3/2013
Methylene chloride	ND	0.011		mg/Kg-dry	1	7/3/2013
Methyl tert-butyl ether	ND	0.0054		mg/Kg-dry	1	7/3/2013
Styrene	ND	0.0054		mg/Kg-dry	1	7/3/2013
1,1,2,2-Tetrachloroethane	ND	0.0054		mg/Kg-dry	1	7/3/2013
Tetrachloroethene	ND	0.0054		mg/Kg-dry	1	7/3/2013
Toluene	ND	0.0054		mg/Kg-dry	1	7/3/2013
1,1,1-Trichloroethane	ND	0.0054		mg/Kg-dry	1	7/3/2013
1,1,2-Trichloroethane	ND	0.0054		mg/Kg-dry	1	7/3/2013
Trichloroethene	ND	0.0054		mg/Kg-dry	1	7/3/2013
Vinyl chloride	ND	0.0054		mg/Kg-dry	1	7/3/2013
Xylenes, Total	ND	0.016		mg/Kg-dry	1	7/3/2013
Cyanide, Total	**SW9012A**			Prep Date: **7/1/2013**		Analyst: **YZ**
Cyanide	ND	0.31		mg/Kg-dry	1	7/2/2013
pH (25 °C)	**SW9045C**			Prep Date: **6/29/2013**		Analyst: **PBG**
pH	8.4			pH Units	1	6/29/2013
Percent Moisture	**D2974**			Prep Date: **7/2/2013**		Analyst: **SDA**
Percent Moisture	18.4	0.2	*	wt%	1	7/2/2013

Qualifiers:
ND - Not Detected at the Reporting Limit
J - Analyte detected below quantitation limits
B - Analyte detected in the associated Method Blank
HT - Sample received past holding time
* - Non-accredited parameter
RL - Reporting / Quantitation Limit for the analysis
S - Spike Recovery outside accepted recovery limits
R - RPD outside accepted recovery limits
E - Value above quantitation range
H - Holding time exceeded

STAT Analysis Corporation
2242 W. Harrison, Suite 200, Chicago, Illinois 60612 Phone: (312) 733-0551 Fax: (312) 733-2386
e-mail address: STATinfo@STATAnalysis.com AIHA, NVLAP and NELAP accredited

CHAIN OF CUSTODY RECORD

Nº: 850548 Page: 1 of 2

Company: Terracon
Project Number: A2137008 Client Tracking No.:
Project Name: 650 west 83rd
Project Location: Chicago IL
Sampler(s): J. Juliano
Report To: Richard O'Brien Phone: 312-575-0014
Fax: 312-575-0111
QC Level: 1 ___ 2 ___ 3 ___ 4 ___ e-mail: rmobrien@terracon.com

P.O. No.:
Quote No.:

Turn Around: STANDARD
Results Needed: / / am/pm

Client Sample Number/Description:	Date Taken	Time Taken	Matrix	Comp.	Grab	Preserv.	No. of Containers	VOC	SVOC	Pesticides	PCB	TAL inorganics	Herbicides	Betex	PNA	RCRA metals			Remarks	Lab No.
B-4 (1-3)	6-27-13	1420	S		X		4							X	X	X				001
B-4 (4-6)		1430	S		X		4							X	X	X				002
B-37 (1-3)		1400												X	X	X				003
B-37 (6-8)		1410												X	X	X				004
B-1 (1-3)		1335						X	X	X	X	X	X							005
B-1 (4-6)		1340						X	X	X	X	X	X							006
B-24 (1-3)		1100												X	X	X				007
B-24 (6-8)		1110												X	X	X				008
B-2 (1-3)		1320					5							X	X	X				009
B-2 (6-8)		1325					4							X	X	X				010
B-23 (1-3)		1120												X	X	X			Hold	011
B-23 (4-6)		1135												X	X	X			Hold	012
B-3 (1-3)		1300												X	X	X				013
B-3 (4-6)		1315												X	X	X				014
B-14 (1-3)		1040												X	X	X				015
B-14 (6-8)		1045												X	X	X				016
B-15 (1-3)		1020												X	X	X				017
B-15 (4-6)		1030												X	X	X				018
B-31 (1-3)		945												X	X	X				019
B-31 (6-8)		1000												X	X	X				020

Relinquished by: (Signature) [signature] Date/Time: 6/27 1618
Received by: (Signature) [signature] Date/Time: 6/27/13 16:18
Relinquished by: (Signature) Date/Time:
Received by: (Signature) Date/Time:
Relinquished by: (Signature) Date/Time:
Received by: (Signature) Date/Time:

Comments: email Rich copy of coc

Preservation Code: A = None B = HNO_3 C = NaOH D = H_2SO_4 E = HCl F = 5035/EnCore G = Other

Laboratory Work Order No.: 13060993
Received on Ice: Yes [X] No [ ]
Temperature: 10.3 °C

STAT Analysis Corporation
2242 W. Harrison, Suite 200, Chicago, Illinois 60612 Phone: (312) 733-0551 Fax: (312) 733-2386
e-mail address: STATinfo@STATAnalysis.com AIHA, NVLAP and NELAP accredited

CHAIN OF CUSTODY RECORD

№: 850549 Page: 2 of 2

Company: Terracon
Project Number: A2137008 Client Tracking No.:
Project Name: 650 West 83rd
Project Location: Chicago IL
Sampler(s): J. Suliano
Report To: Richard O'Brien
Phone: 312-575-0014
Fax: 312-575-0111
e-mail: rmobrien@terracon.com
QC Level: 1 2 3 4

P.O. No.:
Quote No.:

Turn Around: Standard
Results Needed: / / am/pm

Client Sample Number/Description:	Date Taken	Time Taken	Matrix	Comp.	Grab	Preserv.	No. of Containers	VOC	SVOC	Pesticides	PCB	TAL Inorganics	Herbicides	Benex	DNA	RCRA metal			Remarks	Lab No.:
B-16 (1-3)	6-27-13	915	S	~~X~~	X		4							X	X	X				021
B-16 (4-6)	↓	920	S		X		4							X	X	X				022
B-7 (1-3)	↓	900	↓		↓		↓							X	X	X				023
B-7 (4-6)	↓	910	↓		↓		↓							X	X	X				024
B-20 (1-3)	↓	835	↓		↓		↓	X	X	X	X	X	X							025
B-20 (4-6)	↓	825	↓		↓		↓							X	X	X				026
B-21 (1-3)	↓	800	↓		↓		↓							X	X	X				027
B-21 (4-6)	↓	810	↓		↓		↓							X	X	X				028
~~[illegible]~~ (1-3) B-11	↓	740	↓		↓		↓							X	X	X				029
~~[illegible]~~ (4-6) B-11	↓	745	↓		↓		↓	X	X	X	X	X	X							030

Relinquished by: (Signature)	Date/Time: 6/27 1618	
Received by: (Signature)	Date/Time: 6/27/13 1618	
Relinquished by: (Signature)	Date/Time:	
Received by: (Signature)	Date/Time:	
Relinquished by: (Signature)	Date/Time:	
Received by: (Signature)	Date/Time:	

Comments: email Rich copy of coc

Preservation Code: A = None B = HNO_3 C = NaOH D = H_2SO_4 E = HCl F = 5035/EnCore G = Other

Laboratory Work Order No.: 13060943
Received on Ice: Yes [X] No [ ]
Temperature: 10.3 °C

STAT Analysis Corporation

Sample Receipt Checklist

Client Name TERRACON | Date and Time Received: 6/27/2013 4:18:00 PM

Work Order Number 13060993 | Received by: MAM

Checklist completed by: _____ 6/27/13 | Reviewed by: _____ 7/1/13

Signature / Date | Initials / Date

Matrix: | Carrier name | Client Delivered

Shipping container/cooler in good condition?	Yes ☑	No ☐	Not Present ☐	
Custody seals intact on shippping container/cooler?	Yes ☐	No ☐	Not Present ☑	
Custody seals intact on sample bottles?	Yes ☐	No ☐	Not Present ☑	
Chain of custody present?	Yes ☑	No ☐		
Chain of custody signed when relinquished and received?	Yes ☑	No ☐		
Chain of custody agrees with sample labels/containers?	Yes ☑	No ☐		
Samples in proper container/bottle?	Yes ☑	No ☐		
Sample containers intact?	Yes ☑	No ☐		
Sufficient sample volume for indicated test?	Yes ☑	No ☐		
All samples received within holding time?	Yes ☑	No ☐		
Container or Temp Blank temperature in compliance?	Yes ☑	No ☐	Temperature	10.3 °C
Water - VOA vials have zero headspace?	No VOA vials submitted ☐	Yes ☐	No ☐	
Water - Samples pH checked?	Yes ☐	No ☐	Checked by:	
Water - Samples properly preserved?	Yes ☐	No ☐	pH Adjusted?	

Any No response must be detailed in the comments section below.

Comments: _____

Client / Person contacted: _____ Date contacted: _____ Contacted by: _____

Response: _____

Craig Chawla

From: O'Brien, Richard M [rmobrien@terracon.com]
Sent: Tuesday, July 16, 2013 7:57 AM
To: Craig Chawla
Subject: A2137008, 650 West 83rd

Hi Eamon,

Regarding the samples we submitted for A2137008, 650 West 83rd, please analyze the following on standard turnaround:

B-5(1-3) Hexavalent Chromium
B-5(1-3) TCLP Lead
B-11(1-3) TCLP Lead
B-16(4-6) TCLP Lead

B-1(4-6) foc
B-16(1-3) foc

Thanks,

Richard O'Brien, P.E.
Senior Project Engineer
Environmental Services

Terracon Consultants, Inc.
650 West Lake Street, Suite 420 I Chicago, IL 60661
P [312] 575-0014 I F [312] 575-0111 I C [312] 443-2958
rmobrien@terracon.com I terracon.com

Craig Chawla

From: O'Brien, Richard M [rmobrien@terracon.com]
Sent: Monday, July 01, 2013 9:19 AM
To: Craig Chawla
Subject: 650 W. 83rd Street

Hi Craig,

I have a few changes regarding the samples submitted last Tuesday (6/25) – Friday (6/28) for 650 W. 83rd Street by Jason Juliano for us. Please run the following on standard turnaround:

B18(1-3) – Change from BTEX to VOCs
B33(4-6) – Change from BTEX to VOCs
B15(subsurface) – Change from BTEX to VOCs, add pH

B16(1-3) – Change to IEPA Target Compound List
B16(subsurface) – Change to IEPA Target Compound List

B-8(1-3) – Add pH
B29(1-3) – Add pH
B29(subsurface) – Add pH
B12(1-3) – Add pH
B12(subsurface) – Add pH
B31(1-3) – Add pH
B31(subsurface) – Add pH

Note I do not have the "subsurface" intervals listed in samples listed at the moment. They are most likely (4-6) or (6-8). Let me know if you have any questions.

Thanks,

Richard O'Brien, P.E.
Senior Project Engineer
Environmental Services

Terracon Consultants, Inc.
650 West Lake Street, Suite 420 I Chicago, IL 60661
P [312] 575-0014 I F [312] 575-0111 I C [312] 443-2958
rmobrien@terracon.com I terracon.com

Terracon provides geotechnical, environmental, construction materials, and facilities consulting engineering services delivered with responsiveness, resourcefulness, and reliability.

Private and confidential as detailed here (www.terracon.com/disclaimer). If you cannot access hyperlink, please e-mail sender.

Frank Capoccia

From: O'Brien, Richard M [rmobrien@terracon.com]
Sent: Monday, September 23, 2013 4:22 PM
To: Frank Capoccia
Cc: Toth, Matthew J
Subject: RE: TOR 00005 - Additional TCLP Lab Analyssis Request

Hi Frank,

For the 650 W 83rd Job with samples submitted last week of June 2013, we would like to do TCLP lead analysis on the following samples on standard turnaround:

B3(4-6)

B11(4-6)

B13(4-6)

B17(1-3)

Thanks,

Richard O'Brien, P.E.
Senior Project Engineer
Environmental Services

Terracon Consultants, Inc.
650 West Lake Street, Suite 420 I Chicago, IL 60661
P [312] 575-0014 I F [312] 575-0111 I C [312] 443-2958
rmobrien@terracon.com I terracon.com

Terracon provides environmental, facilities, geotechnical, and materials consulting engineering services delivered with responsiveness, resourcefulness, and reliability.

Private and confidential as detailed here (www.terracon.com/disclaimer). If you cannot access hyperlink, please e-mail sender.

STAT Analysis Corporation
2242 West Harrison St., Suite 200, Chicago, IL 60612-3766
Tel: (312) 733-0551 Fax: (312) 733-2386 STATinfo@STATAnalysis.com
Accreditation Numbers: IEPA ELAP 100445; ORELAP IL300001;AIHA 101160; NVLAP LabCode 101202-

July 05, 2013

Terracon Consultants, Inc.
135 Ambassador Drive
Naperville, IL 60540
Telephone: (630) 717-4263
Fax: (630) 357-9489

RE: A2137008, 650 West 83rd Street, Chicago IL STAT Project No 13060930

Dear Richard O'Brien:

STAT Analysis received 24 samples for the referenced project on 6/26/2013 5:00:00 PM. The analytical results are presented in the following report.

All analyses were performed in accordance with the requirements of 35 IAC Part 186 / NELAC standards. Analyses were performed in accordance with methods as referenced on the analytical report. Those analytical results expressed on a dry weight basis are also noted on the analytical report.

All analyses were performed within established holding time criteria, and all Quality Control criteria met EPA or laboratory specifications except when noted in the Case Narrative or Analytical Report. If required, an estimate of uncertainty for the analyses can be provided. A listing of accredited methods/parameters can also be provided.

Thank you for the opportunity to serve you and I look forward to working with you in the future. If you have any questions regarding the enclosed materials, please contact me at (312) 733-0551.

Sincerely,

Craig Chawla
Project Manager

The information contained in this report and any attachments is confidential information intended only for the use of the individual or entities named above. The results of this report relate only to the samples tested. If you have received this report in error, please notify us immediately by phone. This report shall not be reproduced, except in its entirety, unless written approval has been obtained from the laboratory. This analytical report shall become property of the Customer upon payment in full. Otherwise, STAT will be under no obligation to support, defend or discuss the analytical report.

STAT Analysis Corporation

Date: July 05, 2013

Client: Terracon Consultants, Inc.
Project: A2137008, 650 West 83rd Street, Chicago IL
Lab Order: 13060930

Work Order Sample Summary

Lab Sample ID	Client Sample ID	Tag Number	Collection Date	Date Received
13060930-001A	B8 (1-3)		6/26/2013 4:00:00 PM	6/26/2013
13060930-001B	B8 (1-3)		6/26/2013 4:00:00 PM	6/26/2013
13060930-002A	B8 (4-6)		6/26/2013 4:20:00 PM	6/26/2013
13060930-002B	B8 (4-6)		6/26/2013 4:20:00 PM	6/26/2013
13060930-003A	B9 (1-3)		6/26/2013 3:50:00 PM	6/26/2013
13060930-003B	B9 (1-3)		6/26/2013 3:50:00 PM	6/26/2013
13060930-004A	B9 (4-6)		6/26/2013 3:45:00 PM	6/26/2013
13060930-004B	B9 (4-6)		6/26/2013 3:45:00 PM	6/26/2013
13060930-005A	B17 (1-3)		6/26/2013 3:10:00 PM	6/26/2013
13060930-005B	B17 (1-3)		6/26/2013 3:10:00 PM	6/26/2013
13060930-006A	B17 (4-6)		6/26/2013 3:20:00 PM	6/26/2013
13060930-006B	B17 (4-6)		6/26/2013 3:20:00 PM	6/26/2013
13060930-007A	B26 (1-3)		6/26/2013 2:30:00 PM	6/26/2013
13060930-007B	B26 (1-3)		6/26/2013 2:30:00 PM	6/26/2013
13060930-008A	B26 (6-8)		6/26/2013 2:55:00 PM	6/26/2013
13060930-008B	B26 (6-8)		6/26/2013 2:55:00 PM	6/26/2013
13060930-009A	B18 (1-3)		6/26/2013 1:20:00 PM	6/26/2013
13060930-009B	B18 (1-3)		6/26/2013 1:20:00 PM	6/26/2013
13060930-010A	B18 (4-6)		6/26/2013 1:35:00 PM	6/26/2013
13060930-010B	B18 (4-6)		6/26/2013 1:35:00 PM	6/26/2013
13060930-011A	B25 (1-3)		6/26/2013 12:40:00 PM	6/26/2013
13060930-011B	B25 (1-3)		6/26/2013 12:40:00 PM	6/26/2013
13060930-012A	B25 (4-6)		6/26/2013 1:00:00 PM	6/26/2013
13060930-012B	B25 (4-6)		6/26/2013 1:00:00 PM	6/26/2013
13060930-013A	B33 (1-3)		6/26/2013 12:00:00 PM	6/26/2013
13060930-013B	B33 (1-3)		6/26/2013 12:00:00 PM	6/26/2013
13060930-014A	B33 (4-6)		6/26/2013 12:30:00 PM	6/26/2013
13060930-014B	B33 (4-6)		6/26/2013 12:30:00 PM	6/26/2013
13060930-015A	B32 (1-3)		6/26/2013 11:30:00 AM	6/26/2013
13060930-015B	B32 (1-3)		6/26/2013 11:30:00 AM	6/26/2013
13060930-016A	B32 (6-8)		6/26/2013 11:50:00 AM	6/26/2013
13060930-016B	B32 (6-8)		6/26/2013 11:50:00 AM	6/26/2013
13060930-017A	B35 (1-3)		6/26/2013 10:30:00 AM	6/26/2013
13060930-017B	B35 (1-3)		6/26/2013 10:30:00 AM	6/26/2013
13060930-018A	B35 (4-6)		6/26/2013 10:40:00 AM	6/26/2013
13060930-018B	B35 (4-6)		6/26/2013 10:40:00 AM	6/26/2013
13060930-019A	B27 (1-3)		6/26/2013 9:30:00 AM	6/26/2013
13060930-019B	B27 (1-3)		6/26/2013 9:30:00 AM	6/26/2013

Client:	Terracon Consultants, Inc.	
Project:	A2137008, 650 West 83rd Street, Chicago IL	**Work Order Sample Summary**
Lab Order:	13060930	

Lab Sample ID	Client Sample ID	Tag Number	Collection Date	Date Received
13060930-020A	B27 (6-8)		6/26/2013 9:40:00 AM	6/26/2013
13060930-020B	B27 (6-8)		6/26/2013 9:40:00 AM	6/26/2013
13060930-021A	B36 (1-3)		6/26/2013 10:00:00 AM	6/26/2013
13060930-021B	B36 (1-3)		6/26/2013 10:00:00 AM	6/26/2013
13060930-022A	B36 (4-6)		6/26/2013 10:20:00 AM	6/26/2013
13060930-022B	B36 (4-6)		6/26/2013 10:20:00 AM	6/26/2013
13060930-023A	B19 (1-3)		6/26/2013 2:00:00 PM	6/26/2013
13060930-023B	B19 (1-3)		6/26/2013 2:00:00 PM	6/26/2013
13060930-024A	B19 (4-6)		6/26/2013 2:20:00 PM	6/26/2013
13060930-024B	B19 (4-6)		6/26/2013 2:20:00 PM	6/26/2013

STAT Analysis Corporation
2242 West Harrison St., Suite 200, Chicago, IL 60612-3766
Tel: (312) 733-0551 Fax: (312) 733-2386 STATinfo@STATAnalysis.com
Accreditation Numbers: IEPA ELAP 100445; ORELAP IL300001; AIHA 101160; NVLAP LabCode 101202

Date Reported: July 05, 2013
Date Printed: July 05, 2013

Client: Terracon Consultants, Inc.
Lab Order: 13060930
Project: A2137008, 650 West 83rd Street, Chicago IL
Lab ID: 13060930-001

Client Sample ID: B8 (1-3)
Collection Date 6/26/2013 4:00:00 PM
Matrix: Soil

Analyses	Result	RL	Qualifier	Units	DF	Date Analyzed
Mercury	**SW7471A**			Prep Date: **7/3/2013**		Analyst: **LB**
Mercury	ND	0.023		mg/Kg-dry	1	7/3/2013
Metals by ICP/MS	**SW6020 (SW3050B)**			Prep Date: **7/1/2013**		Analyst: **JG**
Arsenic	4.8	1.2		mg/Kg-dry	10	7/2/2013
Barium	120	1.2		mg/Kg-dry	10	7/2/2013
Cadmium	ND	0.61		mg/Kg-dry	10	7/2/2013
Chromium	13	1.2		mg/Kg-dry	10	7/2/2013
Lead	130	0.61		mg/Kg-dry	10	7/2/2013
Selenium	ND	1.2		mg/Kg-dry	10	7/2/2013
Silver	ND	1.2		mg/Kg-dry	10	7/2/2013
Semivolatile Organic Compounds by GC/MS	**SW8270C (SW3550B)**			Prep Date: **6/27/2013**		Analyst: **DM**
Acenaphthene	8.8	0.39		mg/Kg-dry	1	6/29/2013
Acenaphthylene	4.9	0.39		mg/Kg-dry	1	6/29/2013
Anthracene	42	0.39		mg/Kg-dry	1	6/29/2013
Benz(a)anthracene	77	3.9		mg/Kg-dry	10	7/1/2013
Benzo(a)pyrene	73	3.9		mg/Kg-dry	10	7/1/2013
Benzo(b)fluoranthene	53	3.9		mg/Kg-dry	10	7/1/2013
Benzo(g,h,i)perylene	30	0.39		mg/Kg-dry	1	6/29/2013
Benzo(k)fluoranthene	61	3.9		mg/Kg-dry	10	7/1/2013
Chrysene	70	3.9		mg/Kg-dry	10	7/1/2013
Dibenz(a,h)anthracene	16	0.39		mg/Kg-dry	1	6/29/2013
Fluoranthene	180	3.9		mg/Kg-dry	10	7/1/2013
Fluorene	18	0.39		mg/Kg-dry	1	6/29/2013
Indeno(1,2,3-cd)pyrene	28	0.39		mg/Kg-dry	1	6/29/2013
Naphthalene	5.7	0.39		mg/Kg-dry	1	6/29/2013
Phenanthrene	160	3.9		mg/Kg-dry	10	7/1/2013
Pyrene	140	3.9		mg/Kg-dry	10	7/1/2013
BTEX by GC/MS	**SW5035/8260B**			Prep Date: **6/27/2013**		Analyst: **PS**
Benzene	ND	0.005		mg/Kg-dry	1	7/1/2013
Ethylbenzene	ND	0.005		mg/Kg-dry	1	7/1/2013
Toluene	ND	0.005		mg/Kg-dry	1	7/1/2013
Xylenes, Total	ND	0.015		mg/Kg-dry	1	7/1/2013
pH (25 °C)	**SW9045C**			Prep Date: **7/2/2013**		Analyst: **RW**
pH	8.3			pH Units	1	7/2/2013
Percent Moisture	**D2974**			Prep Date: **6/27/2013**		Analyst: **SDA**
Percent Moisture	16.6	0.2	*	wt%	1	6/27/2013

Qualifiers:
ND - Not Detected at the Reporting Limit
J - Analyte detected below quanititation limits
B - Analyte detected in the associated Method Blank
HT - Sample received past holding time
* - Non-accredited parameter
RL - Reporting / Quantitation Limit for the analysis
S - Spike Recovery outside accepted recovery limits
R - RPD outside accepted recovery limits
E - Value above quantitation range
H - Holding time exceeded

STAT Analysis Corporation
2242 West Harrison St., Suite 200, Chicago, IL 60612-3766
Tel: (312) 733-0551 Fax: (312) 733-2386 STATinfo@STATAnalysis.com
Accreditation Numbers: IEPA ELAP 100445; ORELAP IL300001; AIHA 101160; NVLAP LabCode 101202

Date Reported: July 05, 2013
Date Printed: July 05, 2013

Client: Terracon Consultants, Inc.
Lab Order: 13060930
Project: A2137008, 650 West 83rd Street, Chicago IL
Lab ID: 13060930-002

Client Sample ID: B8 (4-6)
Collection Date 6/26/2013 4:20:00 PM
Matrix: Soil

Analyses	Result	RL	Qualifier	Units	DF	Date Analyzed
PCBs		**SW8082 (SW3550B)**		Prep Date: **6/27/2013**		Analyst: **GVC**
Aroclor 1016	ND	0.11		mg/Kg-dry	1	6/27/2013
Aroclor 1221	ND	0.11		mg/Kg-dry	1	6/27/2013
Aroclor 1232	ND	0.11		mg/Kg-dry	1	6/27/2013
Aroclor 1242	ND	0.11		mg/Kg-dry	1	6/27/2013
Aroclor 1248	ND	0.11		mg/Kg-dry	1	6/27/2013
Aroclor 1254	ND	0.11		mg/Kg-dry	1	6/27/2013
Aroclor 1260	ND	0.11		mg/Kg-dry	1	6/27/2013
Pesticides		**SW8081 (SW3550B)**		Prep Date: **6/27/2013**		Analyst: **GVC**
4,4'-DDD	ND	0.0021		mg/Kg-dry	1	6/27/2013
4,4'-DDE	ND	0.0021		mg/Kg-dry	1	6/27/2013
4,4'-DDT	ND	0.0021		mg/Kg-dry	1	6/27/2013
Aldrin	ND	0.0021		mg/Kg-dry	1	6/27/2013
alpha-BHC	ND	0.0021		mg/Kg-dry	1	6/27/2013
alpha-Chlordane	ND	0.0021		mg/Kg-dry	1	6/27/2013
beta-BHC	ND	0.0021		mg/Kg-dry	1	6/27/2013
Chlordane	ND	0.021		mg/Kg-dry	1	6/27/2013
delta-BHC	ND	0.0021		mg/Kg-dry	1	6/27/2013
Dieldrin	ND	0.0021		mg/Kg-dry	1	6/27/2013
Endosulfan I	ND	0.0021		mg/Kg-dry	1	6/27/2013
Endosulfan II	ND	0.0021		mg/Kg-dry	1	6/27/2013
Endosulfan sulfate	ND	0.0021		mg/Kg-dry	1	6/27/2013
Endrin	ND	0.0021		mg/Kg-dry	1	6/27/2013
Endrin aldehyde	ND	0.0021		mg/Kg-dry	1	6/27/2013
Endrin ketone	ND	0.0021		mg/Kg-dry	1	6/27/2013
gamma-BHC	ND	0.0021		mg/Kg-dry	1	6/27/2013
gamma-Chlordane	ND	0.0021		mg/Kg-dry	1	6/27/2013
Heptachlor	ND	0.0021		mg/Kg-dry	1	6/27/2013
Heptachlor epoxide	ND	0.0021		mg/Kg-dry	1	6/27/2013
Methoxychlor	ND	0.0021		mg/Kg-dry	1	6/27/2013
Toxaphene	ND	0.044		mg/Kg-dry	1	6/27/2013
Herbicides in Soil		**SW8321A (SW3550B)**		Prep Date: **6/27/2013**		Analyst: **MEP**
2,4,5-TP (Silvex)	ND	0.0043		mg/Kg-dry	1	6/27/2013
2,4-D	ND	0.0043		mg/Kg-dry	1	6/27/2013
Dalapon	ND	0.043		mg/Kg-dry	1	6/27/2013
Dinoseb	ND	0.0088		mg/Kg-dry	1	6/27/2013
Pentachlorophenol	ND	0.013	*	mg/Kg-dry	1	6/27/2013
Picloram	ND	0.0088	*	mg/Kg-dry	1	6/27/2013

Qualifiers:
ND - Not Detected at the Reporting Limit
J - Analyte detected below quanititation limits
B - Analyte detected in the associated Method Blank
HT - Sample received past holding time
* - Non-accredited parameter
RL - Reporting / Quantitation Limit for the analysis
S - Spike Recovery outside accepted recovery limits
R - RPD outside accepted recovery limits
E - Value above quantitation range
H - Holding time exceeded

STAT Analysis Corporation
2242 West Harrison St., Suite 200, Chicago, IL 60612-3766
Tel: (312) 733-0551 Fax: (312) 733-2386 STATinfo@STATAnalysis.com
Accreditation Numbers: IEPA ELAP 100445; ORELAP IL300001; AIHA 101160; NVLAP LabCode 101202

Date Reported: July 05, 2013
Date Printed: July 05, 2013

Client: Terracon Consultants, Inc.
Lab Order: 13060930
Project: A2137008, 650 West 83rd Street, Chicago IL
Lab ID: 13060930-002

Client Sample ID: B8 (4-6)
Collection Date 6/26/2013 4:20:00 PM
Matrix: Soil

Analyses	Result	RL	Qualifier	Units	DF	Date Analyzed
Mercury	**SW7471A**			Prep Date: **6/28/2013**		Analyst: **LB**
Mercury	0.038	0.026		mg/Kg-dry	1	6/28/2013
Metals by ICP/MS	**SW6020 (SW3050B)**			Prep Date: **7/1/2013**		Analyst: **JG**
Aluminum	8500	240		mg/Kg-dry	100	7/2/2013
Antimony	ND	2.4		mg/Kg-dry	10	7/2/2013
Arsenic	7.2	1.2		mg/Kg-dry	10	7/2/2013
Barium	230	1.2		mg/Kg-dry	10	7/2/2013
Beryllium	2.5	0.59		mg/Kg-dry	10	7/2/2013
Cadmium	1.2	0.59		mg/Kg-dry	10	7/2/2013
Calcium	24000	71		mg/Kg-dry	10	7/2/2013
Chromium	15	1.2		mg/Kg-dry	10	7/2/2013
Cobalt	5.7	1.2		mg/Kg-dry	10	7/2/2013
Copper	20	3		mg/Kg-dry	10	7/2/2013
Iron	24000	360		mg/Kg-dry	100	7/2/2013
Lead	57	0.59		mg/Kg-dry	10	7/2/2013
Magnesium	8400	36		mg/Kg-dry	10	7/2/2013
Manganese	230	1.2		mg/Kg-dry	10	7/2/2013
Nickel	20	1.2		mg/Kg-dry	10	7/2/2013
Potassium	970	36		mg/Kg-dry	10	7/2/2013
Selenium	ND	1.2		mg/Kg-dry	10	7/2/2013
Silver	ND	1.2		mg/Kg-dry	10	7/2/2013
Sodium	540	71		mg/Kg-dry	10	7/2/2013
Thallium	ND	1.2		mg/Kg-dry	10	7/2/2013
Vanadium	28	1.2		mg/Kg-dry	10	7/2/2013
Zinc	110	5.9		mg/Kg-dry	10	7/2/2013
Semivolatile Organic Compounds by GC/MS	**SW8270C (SW3550B)**			Prep Date: **6/27/2013**		Analyst: **DM**
Acenaphthene	1.9	0.044		mg/Kg-dry	1	6/29/2013
Acenaphthylene	0.42	0.044		mg/Kg-dry	1	6/29/2013
Aniline	ND	0.44		mg/Kg-dry	1	6/29/2013
Anthracene	9.7	0.44		mg/Kg-dry	10	7/1/2013
Benz(a)anthracene	19	0.44		mg/Kg-dry	10	7/1/2013
Benzidine	ND	0.44		mg/Kg-dry	1	6/29/2013
Benzo(a)pyrene	18	0.44		mg/Kg-dry	10	7/1/2013
Benzo(b)fluoranthene	14	0.44		mg/Kg-dry	10	7/1/2013
Benzo(g,h,i)perylene	8	0.44		mg/Kg-dry	10	7/1/2013
Benzo(k)fluoranthene	17	0.44		mg/Kg-dry	10	7/1/2013
Benzoic acid	ND	1.1		mg/Kg-dry	1	6/29/2013
Benzyl alcohol	ND	0.22		mg/Kg-dry	1	6/29/2013

Qualifiers:
ND - Not Detected at the Reporting Limit
J - Analyte detected below quanititation limits
B - Analyte detected in the associated Method Blank
HT - Sample received past holding time
* - Non-accredited parameter
RL - Reporting / Quantitation Limit for the analysis
S - Spike Recovery outside accepted recovery limits
R - RPD outside accepted recovery limits
E - Value above quantitation range
H - Holding time exceeded

STAT Analysis Corporation
2242 West Harrison St., Suite 200, Chicago, IL 60612-3766
Tel: (312) 733-0551 Fax: (312) 733-2386 STATinfo@STATAnalysis.com
Accreditation Numbers: IEPA ELAP 100445; ORELAP IL300001; AIHA 101160; NVLAP LabCode 101202

Date Reported: July 05, 2013
Date Printed: July 05, 2013

Client: Terracon Consultants, Inc.
Lab Order: 13060930
Project: A2137008, 650 West 83rd Street, Chicago IL
Lab ID: 13060930-002

Client Sample ID: B8 (4-6)
Collection Date 6/26/2013 4:20:00 PM
Matrix: Soil

Analyses	Result	RL	Qualifier	Units	DF	Date Analyzed
Semivolatile Organic Compounds by GC/MS	**SW8270C (SW3550B)**			Prep Date: **6/27/2013**		Analyst: **DM**
Bis(2-chloroethoxy)methane	ND	0.22		mg/Kg-dry	1	6/29/2013
Bis(2-chloroethyl)ether	ND	0.22		mg/Kg-dry	1	6/29/2013
Bis(2-ethylhexyl)phthalate	ND	1.1		mg/Kg-dry	1	6/29/2013
4-Bromophenyl phenyl ether	ND	0.22		mg/Kg-dry	1	6/29/2013
Butyl benzyl phthalate	ND	0.22		mg/Kg-dry	1	6/29/2013
Carbazole	2	0.22		mg/Kg-dry	1	6/29/2013
4-Chloroaniline	ND	0.22		mg/Kg-dry	1	6/29/2013
4-Chloro-3-methylphenol	ND	0.44		mg/Kg-dry	1	6/29/2013
2-Chloronaphthalene	ND	0.22		mg/Kg-dry	1	6/29/2013
2-Chlorophenol	ND	0.22		mg/Kg-dry	1	6/29/2013
4-Chlorophenyl phenyl ether	ND	0.22		mg/Kg-dry	1	6/29/2013
Chrysene	18	0.44		mg/Kg-dry	10	7/1/2013
Dibenz(a,h)anthracene	4.2	0.044		mg/Kg-dry	1	6/29/2013
Dibenzofuran	2.2	0.22		mg/Kg-dry	1	6/29/2013
1,2-Dichlorobenzene	ND	0.22		mg/Kg-dry	1	6/29/2013
1,3-Dichlorobenzene	ND	0.22		mg/Kg-dry	1	6/29/2013
1,4-Dichlorobenzene	ND	0.22		mg/Kg-dry	1	6/29/2013
3,3'-Dichlorobenzidine	ND	0.22		mg/Kg-dry	1	6/29/2013
2,4-Dichlorophenol	ND	0.22		mg/Kg-dry	1	6/29/2013
Diethyl phthalate	ND	0.22		mg/Kg-dry	1	6/29/2013
2,4-Dimethylphenol	ND	0.22		mg/Kg-dry	1	6/29/2013
Dimethyl phthalate	ND	0.22		mg/Kg-dry	1	6/29/2013
4,6-Dinitro-2-methylphenol	ND	0.44		mg/Kg-dry	1	6/29/2013
2,4-Dinitrophenol	ND	1.1		mg/Kg-dry	1	6/29/2013
2,4-Dinitrotoluene	ND	0.044		mg/Kg-dry	1	6/29/2013
2,6-Dinitrotoluene	ND	0.044		mg/Kg-dry	1	6/29/2013
Di-n-butyl phthalate	ND	0.22		mg/Kg-dry	1	6/29/2013
Di-n-octyl phthalate	ND	0.22		mg/Kg-dry	1	6/29/2013
Fluoranthene	40	0.44		mg/Kg-dry	10	7/1/2013
Fluorene	3.7	0.044		mg/Kg-dry	1	6/29/2013
Hexachlorobenzene	ND	0.22		mg/Kg-dry	1	6/29/2013
Hexachlorobutadiene	ND	0.22		mg/Kg-dry	1	6/29/2013
Hexachlorocyclopentadiene	ND	0.22		mg/Kg-dry	1	6/29/2013
Hexachloroethane	ND	0.22		mg/Kg-dry	1	6/29/2013
Indeno(1,2,3-cd)pyrene	7.7	0.44		mg/Kg-dry	10	7/1/2013
Isophorone	ND	0.22		mg/Kg-dry	1	6/29/2013
2-Methylnaphthalene	0.62	0.22		mg/Kg-dry	1	6/29/2013
2-Methylphenol	ND	0.22		mg/Kg-dry	1	6/29/2013

Qualifiers:
ND - Not Detected at the Reporting Limit
J - Analyte detected below quanititation limits
B - Analyte detected in the associated Method Blank
HT - Sample received past holding time
* - Non-accredited parameter
RL - Reporting / Quantitation Limit for the analysis
S - Spike Recovery outside accepted recovery limits
R - RPD outside accepted recovery limits
E - Value above quantitation range
H - Holding time exceeded

STAT Analysis Corporation
2242 West Harrison St., Suite 200, Chicago, IL 60612-3766
Tel: (312) 733-0551 Fax: (312) 733-2386 STATinfo@STATAnalysis.com
Accreditation Numbers: IEPA ELAP 100445; ORELAP IL300001; AIHA 101160; NVLAP LabCode 101202

Date Reported: July 05, 2013
Date Printed: July 05, 2013

Client: Terracon Consultants, Inc.
Lab Order: 13060930
Project: A2137008, 650 West 83rd Street, Chicago IL
Lab ID: 13060930-002

Client Sample ID: B8 (4-6)
Collection Date 6/26/2013 4:20:00 PM
Matrix: Soil

Analyses	Result	RL	Qualifier	Units	DF	Date Analyzed
Semivolatile Organic Compounds by GC/MS	**SW8270C (SW3550B)**			Prep Date: **6/27/2013**		Analyst: **DM**
4-Methylphenol	ND	0.22		mg/Kg-dry	1	6/29/2013
Naphthalene	1	0.044		mg/Kg-dry	1	6/29/2013
2-Nitroaniline	ND	0.22		mg/Kg-dry	1	6/29/2013
3-Nitroaniline	ND	0.22		mg/Kg-dry	1	6/29/2013
4-Nitroaniline	ND	0.22		mg/Kg-dry	1	6/29/2013
2-Nitrophenol	ND	0.22		mg/Kg-dry	1	6/29/2013
4-Nitrophenol	ND	0.44		mg/Kg-dry	1	6/29/2013
Nitrobenzene	ND	0.044		mg/Kg-dry	1	6/29/2013
N-Nitrosodi-n-propylamine	ND	0.044		mg/Kg-dry	1	6/29/2013
N-Nitrosodimethylamine	ND	0.22		mg/Kg-dry	1	6/29/2013
N-Nitrosodiphenylamine	ND	0.044		mg/Kg-dry	1	6/29/2013
2, 2'-oxybis(1-Chloropropane)	ND	0.22		mg/Kg-dry	1	6/29/2013
Pentachlorophenol	ND	0.088		mg/Kg-dry	1	6/29/2013
Phenanthrene	32	0.44		mg/Kg-dry	10	7/1/2013
Phenol	ND	0.22		mg/Kg-dry	1	6/29/2013
Pyrene	32	0.44		mg/Kg-dry	10	7/1/2013
Pyridine	ND	0.88		mg/Kg-dry	1	6/29/2013
1,2,4-Trichlorobenzene	ND	0.22		mg/Kg-dry	1	6/29/2013
2,4,5-Trichlorophenol	ND	0.22		mg/Kg-dry	1	6/29/2013
2,4,6-Trichlorophenol	ND	0.22		mg/Kg-dry	1	6/29/2013
Volatile Organic Compounds by GC/MS	**SW5035/8260B**			Prep Date: **6/27/2013**		Analyst: **PS**
Acetone	ND	0.097		mg/Kg-dry	1	7/1/2013
Benzene	ND	0.0064		mg/Kg-dry	1	7/1/2013
Bromodichloromethane	ND	0.0064		mg/Kg-dry	1	7/1/2013
Bromoform	ND	0.0064		mg/Kg-dry	1	7/1/2013
Bromomethane	ND	0.013		mg/Kg-dry	1	7/1/2013
2-Butanone	ND	0.097		mg/Kg-dry	1	7/1/2013
Carbon disulfide	ND	0.064		mg/Kg-dry	1	7/1/2013
Carbon tetrachloride	ND	0.0064		mg/Kg-dry	1	7/1/2013
Chlorobenzene	ND	0.0064		mg/Kg-dry	1	7/1/2013
Chloroethane	ND	0.013		mg/Kg-dry	1	7/1/2013
Chloroform	ND	0.0064		mg/Kg-dry	1	7/1/2013
Chloromethane	ND	0.013		mg/Kg-dry	1	7/1/2013
Dibromochloromethane	ND	0.0064		mg/Kg-dry	1	7/1/2013
1,1-Dichloroethane	ND	0.0064		mg/Kg-dry	1	7/1/2013
1,2-Dichloroethane	ND	0.0064		mg/Kg-dry	1	7/1/2013
1,1-Dichloroethene	ND	0.0064		mg/Kg-dry	1	7/1/2013
cis-1,2-Dichloroethene	ND	0.0064		mg/Kg-dry	1	7/1/2013

Qualifiers:
ND - Not Detected at the Reporting Limit
J - Analyte detected below quanititation limits
B - Analyte detected in the associated Method Blank
HT - Sample received past holding time
* - Non-accredited parameter
RL - Reporting / Quantitation Limit for the analysis
S - Spike Recovery outside accepted recovery limits
R - RPD outside accepted recovery limits
E - Value above quantitation range
H - Holding time exceeded

STAT Analysis Corporation
2242 West Harrison St., Suite 200, Chicago, IL 60612-3766
Tel: (312) 733-0551 Fax: (312) 733-2386 STATinfo@STATAnalysis.com
Accreditation Numbers: IEPA ELAP 100445; ORELAP IL300001; AIHA 101160; NVLAP LabCode 101202

Date Reported: July 05, 2013
Date Printed: July 05, 2013

Client: Terracon Consultants, Inc.
Lab Order: 13060930
Project: A2137008, 650 West 83rd Street, Chicago IL
Lab ID: 13060930-002

Client Sample ID: B8 (4-6)
Collection Date 6/26/2013 4:20:00 PM
Matrix: Soil

Analyses	Result	RL	Qualifier	Units	DF	Date Analyzed
Volatile Organic Compounds by GC/MS	**SW5035/8260B**			Prep Date: **6/27/2013**		Analyst: **PS**
trans-1,2-Dichloroethene	ND	0.0064		mg/Kg-dry	1	7/1/2013
1,2-Dichloropropane	ND	0.0064		mg/Kg-dry	1	7/1/2013
cis-1,3-Dichloropropene	ND	0.0026		mg/Kg-dry	1	7/1/2013
trans-1,3-Dichloropropene	ND	0.0026		mg/Kg-dry	1	7/1/2013
Ethylbenzene	ND	0.0064		mg/Kg-dry	1	7/1/2013
2-Hexanone	ND	0.026		mg/Kg-dry	1	7/1/2013
4-Methyl-2-pentanone	ND	0.026		mg/Kg-dry	1	7/1/2013
Methylene chloride	ND	0.013		mg/Kg-dry	1	7/1/2013
Methyl tert-butyl ether	ND	0.0064		mg/Kg-dry	1	7/1/2013
Styrene	ND	0.0064		mg/Kg-dry	1	7/1/2013
1,1,2,2-Tetrachloroethane	ND	0.0064		mg/Kg-dry	1	7/1/2013
Tetrachloroethene	ND	0.0064		mg/Kg-dry	1	7/1/2013
Toluene	ND	0.0064		mg/Kg-dry	1	7/1/2013
1,1,1-Trichloroethane	ND	0.0064		mg/Kg-dry	1	7/1/2013
1,1,2-Trichloroethane	ND	0.0064		mg/Kg-dry	1	7/1/2013
Trichloroethene	ND	0.0064		mg/Kg-dry	1	7/1/2013
Vinyl chloride	ND	0.0064		mg/Kg-dry	1	7/1/2013
Xylenes, Total	ND	0.019		mg/Kg-dry	1	7/1/2013
Cyanide, Total	**SW9012A**			Prep Date: **6/27/2013**		Analyst: **MDDT**
Cyanide	ND	0.33		mg/Kg-dry	1	6/28/2013
pH (25 °C)	**SW9045C**			Prep Date: **7/2/2013**		Analyst: **RW**
pH	8.0			pH Units	1	7/2/2013
Percent Moisture	**D2974**			Prep Date: **6/27/2013**		Analyst: **SDA**
Percent Moisture	24.5	0.2	*	wt%	1	6/27/2013

Qualifiers:

ND - Not Detected at the Reporting Limit
J - Analyte detected below quanititation limits
B - Analyte detected in the associated Method Blank
HT - Sample received past holding time
* - Non-accredited parameter
RL - Reporting / Quantitation Limit for the analysis
S - Spike Recovery outside accepted recovery limits
R - RPD outside accepted recovery limits
E - Value above quantitation range
H - Holding time exceeded

STAT Analysis Corporation
2242 West Harrison St., Suite 200, Chicago, IL 60612-3766
Tel: (312) 733-0551 Fax: (312) 733-2386 STATinfo@STATAnalysis.com
Accreditation Numbers: IEPA ELAP 100445; ORELAP IL300001; AIHA 101160; NVLAP LabCode 101202

Date Reported: July 05, 2013
Date Printed: July 05, 2013

Client: Terracon Consultants, Inc.
Lab Order: 13060930
Project: A2137008, 650 West 83rd Street, Chicago IL
Lab ID: 13060930-003

Client Sample ID: B9 (1-3)
Collection Date 6/26/2013 3:50:00 PM
Matrix: Soil

Analyses	Result	RL	Qualifier	Units	DF	Date Analyzed
Mercury	**SW7471A**			Prep Date: **7/3/2013**		Analyst: **LB**
Mercury	0.041	0.017		mg/Kg-dry	1	7/3/2013
Metals by ICP/MS	**SW6020 (SW3050B)**			Prep Date: **7/1/2013**		Analyst: **JG**
Arsenic	6.6	1.2		mg/Kg-dry	10	7/2/2013
Barium	490	1.2		mg/Kg-dry	10	7/2/2013
Cadmium	ND	0.58		mg/Kg-dry	10	7/2/2013
Chromium	13	1.2		mg/Kg-dry	10	7/2/2013
Lead	64	0.58		mg/Kg-dry	10	7/2/2013
Selenium	ND	1.2		mg/Kg-dry	10	7/2/2013
Silver	ND	1.2		mg/Kg-dry	10	7/2/2013
Semivolatile Organic Compounds by GC/MS	**SW8270C (SW3550B)**			Prep Date: **6/27/2013**		Analyst: **DM**
Acenaphthene	ND	0.36		mg/Kg-dry	1	7/1/2013
Acenaphthylene	ND	0.36		mg/Kg-dry	1	7/1/2013
Anthracene	ND	0.36		mg/Kg-dry	1	7/1/2013
Benz(a)anthracene	0.44	0.36		mg/Kg-dry	1	7/1/2013
Benzo(a)pyrene	1.2	0.36		mg/Kg-dry	1	7/1/2013
Benzo(b)fluoranthene	0.81	0.36		mg/Kg-dry	1	7/1/2013
Benzo(g,h,i)perylene	1.1	0.36		mg/Kg-dry	1	7/1/2013
Benzo(k)fluoranthene	0.52	0.36		mg/Kg-dry	1	7/1/2013
Chrysene	0.6	0.36		mg/Kg-dry	1	7/1/2013
Dibenz(a,h)anthracene	0.51	0.36		mg/Kg-dry	1	7/1/2013
Fluoranthene	0.86	0.36		mg/Kg-dry	1	7/1/2013
Fluorene	ND	0.36		mg/Kg-dry	1	7/1/2013
Indeno(1,2,3-cd)pyrene	0.73	0.36		mg/Kg-dry	1	7/1/2013
Naphthalene	ND	0.36		mg/Kg-dry	1	7/1/2013
Phenanthrene	0.43	0.36		mg/Kg-dry	1	7/1/2013
Pyrene	0.98	0.36		mg/Kg-dry	1	7/1/2013
BTEX by GC/MS	**SW5035/8260B**			Prep Date: **6/28/2013**		Analyst: **PS**
Benzene	ND	0.005		mg/Kg-dry	1	7/1/2013
Ethylbenzene	ND	0.005		mg/Kg-dry	1	7/1/2013
Toluene	ND	0.005		mg/Kg-dry	1	7/1/2013
Xylenes, Total	ND	0.015		mg/Kg-dry	1	7/1/2013
Percent Moisture	**D2974**			Prep Date: **6/27/2013**		Analyst: **SDA**
Percent Moisture	10.1	0.2	*	wt%	1	6/27/2013

Qualifiers:
ND - Not Detected at the Reporting Limit
J - Analyte detected below quanititation limits
B - Analyte detected in the associated Method Blank
HT - Sample received past holding time
* - Non-accredited parameter
RL - Reporting / Quantitation Limit for the analysis
S - Spike Recovery outside accepted recovery limits
R - RPD outside accepted recovery limits
E - Value above quantitation range
H - Holding time exceeded

STAT Analysis Corporation
2242 West Harrison St., Suite 200, Chicago, IL 60612-3766
Tel: (312) 733-0551 Fax: (312) 733-2386 STATinfo@STATAnalysis.com
Accreditation Numbers: IEPA ELAP 100445; ORELAP IL300001; AIHA 101160; NVLAP LabCode 101202

Date Reported: July 05, 2013
Date Printed: July 05, 2013

Client: Terracon Consultants, Inc.
Lab Order: 13060930
Project: A2137008, 650 West 83rd Street, Chicago IL
Lab ID: 13060930-004

Client Sample ID: B9 (4-6)
Collection Date 6/26/2013 3:45:00 PM
Matrix: Soil

Analyses	Result	RL	Qualifier	Units	DF	Date Analyzed
Mercury	**SW7471A**			Prep Date: **7/3/2013**		Analyst: **LB**
Mercury	0.34	0.027		mg/Kg-dry	1	7/3/2013
Metals by ICP/MS	**SW6020 (SW3050B)**			Prep Date: **7/1/2013**		Analyst: **JG**
Arsenic	7.2	1.5		mg/Kg-dry	10	7/2/2013
Barium	230	1.5		mg/Kg-dry	10	7/2/2013
Cadmium	1.1	0.75		mg/Kg-dry	10	7/2/2013
Chromium	18	1.5		mg/Kg-dry	10	7/2/2013
Lead	140	0.75		mg/Kg-dry	10	7/2/2013
Selenium	ND	1.5		mg/Kg-dry	10	7/2/2013
Silver	ND	1.5		mg/Kg-dry	10	7/2/2013
Semivolatile Organic Compounds by GC/MS	**SW8270C (SW3550B)**			Prep Date: **6/27/2013**		Analyst: **DM**
Acenaphthene	1.3	0.05		mg/Kg-dry	1	7/1/2013
Acenaphthylene	0.76	0.05		mg/Kg-dry	1	7/1/2013
Anthracene	3.3	0.05		mg/Kg-dry	1	7/1/2013
Benz(a)anthracene	6.2	0.5		mg/Kg-dry	10	7/1/2013
Benzo(a)pyrene	5.7	0.05		mg/Kg-dry	1	7/1/2013
Benzo(b)fluoranthene	5.3	0.05		mg/Kg-dry	1	7/1/2013
Benzo(g,h,i)perylene	2.6	0.05		mg/Kg-dry	1	7/1/2013
Benzo(k)fluoranthene	4.6	0.05		mg/Kg-dry	1	7/1/2013
Chrysene	6.2	0.5		mg/Kg-dry	10	7/1/2013
Dibenz(a,h)anthracene	1.5	0.05		mg/Kg-dry	1	7/1/2013
Fluoranthene	15	0.5		mg/Kg-dry	10	7/1/2013
Fluorene	2.7	0.05		mg/Kg-dry	1	7/1/2013
Indeno(1,2,3-cd)pyrene	2.4	0.05		mg/Kg-dry	1	7/1/2013
Naphthalene	3.1	0.05		mg/Kg-dry	1	7/1/2013
Phenanthrene	14	0.5		mg/Kg-dry	10	7/1/2013
Pyrene	12	0.5		mg/Kg-dry	10	7/1/2013
BTEX by GC/MS	**SW5035/8260B**			Prep Date: **6/28/2013**		Analyst: **PS**
Benzene	ND	0.0076		mg/Kg-dry	1	7/1/2013
Ethylbenzene	ND	0.0076		mg/Kg-dry	1	7/1/2013
Toluene	ND	0.0076		mg/Kg-dry	1	7/1/2013
Xylenes, Total	ND	0.023		mg/Kg-dry	1	7/1/2013
Percent Moisture	**D2974**			Prep Date: **6/27/2013**		Analyst: **SDA**
Percent Moisture	33.7	0.2	*	wt%	1	6/27/2013

Qualifiers:
ND - Not Detected at the Reporting Limit
J - Analyte detected below quanititation limits
B - Analyte detected in the associated Method Blank
HT - Sample received past holding time
* - Non-accredited parameter
RL - Reporting / Quantitation Limit for the analysis
S - Spike Recovery outside accepted recovery limits
R - RPD outside accepted recovery limits
E - Value above quantitation range
H - Holding time exceeded

STAT Analysis Corporation
2242 West Harrison St., Suite 200, Chicago, IL 60612-3766
Tel: (312) 733-0551 Fax: (312) 733-2386 STATinfo@STATAnalysis.com
Accreditation Numbers: IEPA ELAP 100445; ORELAP IL300001; AIHA 101160; NVLAP LabCode 101202

Date Reported: July 05, 2013
Date Printed: July 05, 2013

Client: Terracon Consultants, Inc.
Lab Order: 13060930
Project: A2137008, 650 West 83rd Street, Chicago IL
Lab ID: 13060930-005

Client Sample ID: B17 (1-3)
Collection Date 6/26/2013 3:10:00 PM
Matrix: Soil

Analyses	Result	RL	Qualifier	Units	DF	Date Analyzed
Mercury	**SW7471A**			Prep Date: **7/3/2013**		Analyst: **LB**
Mercury	0.2	0.025		mg/Kg-dry	1	7/3/2013
Metals by ICP/MS	**SW6020 (SW3050B)**			Prep Date: **7/1/2013**		Analyst: **JG**
Arsenic	14	1.1		mg/Kg-dry	10	7/2/2013
Barium	880	1.1		mg/Kg-dry	10	7/2/2013
Cadmium	3.2	0.56		mg/Kg-dry	10	7/2/2013
Chromium	35	1.1		mg/Kg-dry	10	7/2/2013
Lead	1200	0.56		mg/Kg-dry	10	7/2/2013
Selenium	ND	1.1		mg/Kg-dry	10	7/2/2013
Silver	1.7	1.1		mg/Kg-dry	10	7/2/2013
Semivolatile Organic Compounds by GC/MS	**SW8270C (SW3550B)**			Prep Date: **6/27/2013**		Analyst: **DM**
Acenaphthene	ND	0.41		mg/Kg-dry	1	7/1/2013
Acenaphthylene	ND	0.41		mg/Kg-dry	1	7/1/2013
Anthracene	ND	0.41		mg/Kg-dry	1	7/1/2013
Benz(a)anthracene	0.89	0.41		mg/Kg-dry	1	7/1/2013
Benzo(a)pyrene	0.92	0.41		mg/Kg-dry	1	7/1/2013
Benzo(b)fluoranthene	0.68	0.41		mg/Kg-dry	1	7/1/2013
Benzo(g,h,i)perylene	0.45	0.41		mg/Kg-dry	1	7/1/2013
Benzo(k)fluoranthene	0.47	0.41		mg/Kg-dry	1	7/1/2013
Chrysene	0.86	0.41		mg/Kg-dry	1	7/1/2013
Dibenz(a,h)anthracene	ND	0.41		mg/Kg-dry	1	7/1/2013
Fluoranthene	1.8	0.41		mg/Kg-dry	1	7/1/2013
Fluorene	ND	0.41		mg/Kg-dry	1	7/1/2013
Indeno(1,2,3-cd)pyrene	0.42	0.41		mg/Kg-dry	1	7/1/2013
Naphthalene	ND	0.41		mg/Kg-dry	1	7/1/2013
Phenanthrene	0.82	0.41		mg/Kg-dry	1	7/1/2013
Pyrene	1.4	0.41		mg/Kg-dry	1	7/1/2013
BTEX by GC/MS	**SW5035/8260B**			Prep Date: **6/28/2013**		Analyst: **PS**
Benzene	ND	0.0053		mg/Kg-dry	1	7/1/2013
Ethylbenzene	ND	0.0053		mg/Kg-dry	1	7/1/2013
Toluene	ND	0.0053		mg/Kg-dry	1	7/1/2013
Xylenes, Total	ND	0.016		mg/Kg-dry	1	7/1/2013
Percent Moisture	**D2974**			Prep Date: **6/27/2013**		Analyst: **SDA**
Percent Moisture	20.2	0.2	*	wt%	1	6/27/2013

Qualifiers:
ND - Not Detected at the Reporting Limit
J - Analyte detected below quanititation limits
B - Analyte detected in the associated Method Blank
HT - Sample received past holding time
* - Non-accredited parameter
RL - Reporting / Quantitation Limit for the analysis
S - Spike Recovery outside accepted recovery limits
R - RPD outside accepted recovery limits
E - Value above quantitation range
H - Holding time exceeded

STAT Analysis Corporation
2242 West Harrison St., Suite 200, Chicago, IL 60612-3766
Tel: (312) 733-0551 Fax: (312) 733-2386 STATinfo@STATAnalysis.com
Accreditation Numbers: IEPA ELAP 100445; ORELAP IL300001; AIHA 101160; NVLAP LabCode 101202

Date Reported: July 05, 2013
Date Printed: July 05, 2013

Client: Terracon Consultants, Inc.
Lab Order: 13060930
Project: A2137008, 650 West 83rd Street, Chicago IL
Lab ID: 13060930-006

Client Sample ID: B17 (4-6)
Collection Date 6/26/2013 3:20:00 PM
Matrix: Soil

Analyses	Result	RL	Qualifier	Units	DF	Date Analyzed
Mercury	**SW7471A**			Prep Date: **7/3/2013**		Analyst: **LB**
Mercury	2	0.14		mg/Kg-dry	5	7/3/2013
Metals by ICP/MS	**SW6020 (SW3050B)**			Prep Date: **7/1/2013**		Analyst: **JG**
Arsenic	31	1.5		mg/Kg-dry	10	7/2/2013
Barium	560	1.5		mg/Kg-dry	10	7/2/2013
Cadmium	2.4	0.76		mg/Kg-dry	10	7/2/2013
Chromium	30	1.5		mg/Kg-dry	10	7/2/2013
Lead	890	0.76		mg/Kg-dry	10	7/2/2013
Selenium	2.3	1.5		mg/Kg-dry	10	7/2/2013
Silver	ND	1.5		mg/Kg-dry	10	7/2/2013
Semivolatile Organic Compounds by GC/MS	**SW8270C (SW3550B)**			Prep Date: **6/27/2013**		Analyst: **DM**
Acenaphthene	ND	0.053		mg/Kg-dry	1	7/1/2013
Acenaphthylene	ND	0.053		mg/Kg-dry	1	7/1/2013
Anthracene	ND	0.053		mg/Kg-dry	1	7/1/2013
Benz(a)anthracene	0.058	0.053		mg/Kg-dry	1	7/1/2013
Benzo(a)pyrene	0.062	0.053		mg/Kg-dry	1	7/1/2013
Benzo(b)fluoranthene	0.067	0.053		mg/Kg-dry	1	7/1/2013
Benzo(g,h,i)perylene	ND	0.053		mg/Kg-dry	1	7/1/2013
Benzo(k)fluoranthene	ND	0.053		mg/Kg-dry	1	7/1/2013
Chrysene	0.081	0.053		mg/Kg-dry	1	7/1/2013
Dibenz(a,h)anthracene	ND	0.053		mg/Kg-dry	1	7/1/2013
Fluoranthene	0.11	0.053		mg/Kg-dry	1	7/1/2013
Fluorene	ND	0.053		mg/Kg-dry	1	7/1/2013
Indeno(1,2,3-cd)pyrene	ND	0.053		mg/Kg-dry	1	7/1/2013
Naphthalene	ND	0.053		mg/Kg-dry	1	7/1/2013
Phenanthrene	0.084	0.053		mg/Kg-dry	1	7/1/2013
Pyrene	0.11	0.053		mg/Kg-dry	1	7/1/2013
BTEX by GC/MS	**SW5035/8260B**			Prep Date: **6/28/2013**		Analyst: **PS**
Benzene	ND	0.0092		mg/Kg-dry	1	7/1/2013
Ethylbenzene	ND	0.0092		mg/Kg-dry	1	7/1/2013
Toluene	ND	0.0092		mg/Kg-dry	1	7/1/2013
Xylenes, Total	ND	0.028		mg/Kg-dry	1	7/1/2013
Percent Moisture	**D2974**			Prep Date: **6/27/2013**		Analyst: **SDA**
Percent Moisture	38.6	0.2	*	wt%	1	6/27/2013

Qualifiers:
ND - Not Detected at the Reporting Limit
J - Analyte detected below quanititation limits
B - Analyte detected in the associated Method Blank
HT - Sample received past holding time
* - Non-accredited parameter
RL - Reporting / Quantitation Limit for the analysis
S - Spike Recovery outside accepted recovery limits
R - RPD outside accepted recovery limits
E - Value above quantitation range
H - Holding time exceeded

STAT Analysis Corporation
2242 West Harrison St., Suite 200, Chicago, IL 60612-3766
Tel: (312) 733-0551 Fax: (312) 733-2386 STATinfo@STATAnalysis.com
Accreditation Numbers: IEPA ELAP 100445; ORELAP IL300001; AIHA 101160; NVLAP LabCode 101202

Date Reported: July 05, 2013
Date Printed: July 05, 2013

Client: Terracon Consultants, Inc.
Lab Order: 13060930
Project: A2137008, 650 West 83rd Street, Chicago IL
Lab ID: 13060930-007

Client Sample ID: B26 (1-3)
Collection Date 6/26/2013 2:30:00 PM
Matrix: Soil

Analyses	Result	RL	Qualifier	Units	DF	Date Analyzed
Mercury	**SW7471A**			Prep Date: **7/3/2013**		Analyst: **LB**
Mercury	0.36	0.023		mg/Kg-dry	1	7/3/2013
Metals by ICP/MS	**SW6020 (SW3050B)**			Prep Date: **7/1/2013**		Analyst: **JG**
Arsenic	27	1.1		mg/Kg-dry	10	7/2/2013
Barium	300	1.1		mg/Kg-dry	10	7/2/2013
Cadmium	2.1	0.54		mg/Kg-dry	10	7/2/2013
Chromium	18	1.1		mg/Kg-dry	10	7/2/2013
Lead	600	0.54		mg/Kg-dry	10	7/2/2013
Selenium	1.6	1.1		mg/Kg-dry	10	7/2/2013
Silver	ND	1.1		mg/Kg-dry	10	7/2/2013
Semivolatile Organic Compounds by GC/MS	**SW8270C (SW3550B)**			Prep Date: **6/27/2013**		Analyst: **DM**
Acenaphthene	6.2	0.39		mg/Kg-dry	1	7/1/2013
Acenaphthylene	ND	0.39		mg/Kg-dry	1	7/1/2013
Anthracene	20	0.39		mg/Kg-dry	1	7/1/2013
Benz(a)anthracene	29	0.39		mg/Kg-dry	1	7/1/2013
Benzo(a)pyrene	22	0.39		mg/Kg-dry	1	7/1/2013
Benzo(b)fluoranthene	22	0.39		mg/Kg-dry	1	7/1/2013
Benzo(g,h,i)perylene	10	0.39		mg/Kg-dry	1	7/1/2013
Benzo(k)fluoranthene	19	0.39		mg/Kg-dry	1	7/1/2013
Chrysene	31	0.39		mg/Kg-dry	1	7/1/2013
Dibenz(a,h)anthracene	6.4	0.39		mg/Kg-dry	1	7/1/2013
Fluoranthene	70	2		mg/Kg-dry	5	7/3/2013
Fluorene	11	0.39		mg/Kg-dry	1	7/1/2013
Indeno(1,2,3-cd)pyrene	9.5	0.39		mg/Kg-dry	1	7/1/2013
Naphthalene	5.5	0.39		mg/Kg-dry	1	7/1/2013
Phenanthrene	76	2		mg/Kg-dry	5	7/3/2013
Pyrene	53	2		mg/Kg-dry	5	7/3/2013
BTEX by GC/MS	**SW5035/8260B**			Prep Date: **6/28/2013**		Analyst: **PS**
Benzene	ND	0.0059		mg/Kg-dry	1	7/1/2013
Ethylbenzene	ND	0.0059		mg/Kg-dry	1	7/1/2013
Toluene	ND	0.0059		mg/Kg-dry	1	7/1/2013
Xylenes, Total	ND	0.018		mg/Kg-dry	1	7/1/2013
Percent Moisture	**D2974**			Prep Date: **6/27/2013**		Analyst: **SDA**
Percent Moisture	15.9	0.2	*	wt%	1	6/27/2013

Qualifiers:
ND - Not Detected at the Reporting Limit
J - Analyte detected below quanititation limits
B - Analyte detected in the associated Method Blank
HT - Sample received past holding time
* - Non-accredited parameter
RL - Reporting / Quantitation Limit for the analysis
S - Spike Recovery outside accepted recovery limits
R - RPD outside accepted recovery limits
E - Value above quantitation range
H - Holding time exceeded

STAT Analysis Corporation
2242 West Harrison St., Suite 200, Chicago, IL 60612-3766
Tel: (312) 733-0551 Fax: (312) 733-2386 STATinfo@STATAnalysis.com
Accreditation Numbers: IEPA ELAP 100445; ORELAP IL300001; AIHA 101160; NVLAP LabCode 101202

Date Reported: July 05, 2013
Date Printed: July 05, 2013

Client: Terracon Consultants, Inc.
Lab Order: 13060930
Project: A2137008, 650 West 83rd Street, Chicago IL
Lab ID: 13060930-008

Client Sample ID: B26 (6-8)
Collection Date 6/26/2013 2:55:00 PM
Matrix: Soil

Analyses	Result	RL	Qualifier	Units	DF	Date Analyzed
Mercury	**SW7471A**			Prep Date: **7/3/2013**		Analyst: **LB**
Mercury	ND	0.023		mg/Kg-dry	1	7/3/2013
Metals by ICP/MS	**SW6020 (SW3050B)**			Prep Date: **7/1/2013**		Analyst: **JG**
Arsenic	7.3	1.1		mg/Kg-dry	10	7/1/2013
Barium	47	1.1		mg/Kg-dry	10	7/1/2013
Cadmium	ND	0.55		mg/Kg-dry	10	7/1/2013
Chromium	16	1.1		mg/Kg-dry	10	7/1/2013
Lead	18	0.55		mg/Kg-dry	10	7/1/2013
Selenium	ND	1.1		mg/Kg-dry	10	7/1/2013
Silver	ND	1.1		mg/Kg-dry	10	7/1/2013
Semivolatile Organic Compounds by GC/MS	**SW8270C (SW3550B)**			Prep Date: **6/27/2013**		Analyst: **DM**
Acenaphthene	ND	0.04		mg/Kg-dry	1	7/1/2013
Acenaphthylene	ND	0.04		mg/Kg-dry	1	7/1/2013
Anthracene	ND	0.04		mg/Kg-dry	1	7/1/2013
Benz(a)anthracene	ND	0.04		mg/Kg-dry	1	7/1/2013
Benzo(a)pyrene	ND	0.04		mg/Kg-dry	1	7/1/2013
Benzo(b)fluoranthene	ND	0.04		mg/Kg-dry	1	7/1/2013
Benzo(g,h,i)perylene	ND	0.04		mg/Kg-dry	1	7/1/2013
Benzo(k)fluoranthene	ND	0.04		mg/Kg-dry	1	7/1/2013
Chrysene	ND	0.04		mg/Kg-dry	1	7/1/2013
Dibenz(a,h)anthracene	ND	0.04		mg/Kg-dry	1	7/1/2013
Fluoranthene	ND	0.04		mg/Kg-dry	1	7/1/2013
Fluorene	ND	0.04		mg/Kg-dry	1	7/1/2013
Indeno(1,2,3-cd)pyrene	ND	0.04		mg/Kg-dry	1	7/1/2013
Naphthalene	ND	0.04		mg/Kg-dry	1	7/1/2013
Phenanthrene	ND	0.04		mg/Kg-dry	1	7/1/2013
Pyrene	ND	0.04		mg/Kg-dry	1	7/1/2013
BTEX by GC/MS	**SW5035/8260B**			Prep Date: **6/28/2013**		Analyst: **PS**
Benzene	ND	0.0043		mg/Kg-dry	1	7/1/2013
Ethylbenzene	ND	0.0043		mg/Kg-dry	1	7/1/2013
Toluene	ND	0.0043		mg/Kg-dry	1	7/1/2013
Xylenes, Total	ND	0.013		mg/Kg-dry	1	7/1/2013
Percent Moisture	**D2974**			Prep Date: **6/27/2013**		Analyst: **SDA**
Percent Moisture	17.5	0.2	*	wt%	1	6/27/2013

Qualifiers:
ND - Not Detected at the Reporting Limit
J - Analyte detected below quanititation limits
B - Analyte detected in the associated Method Blank
HT - Sample received past holding time
* - Non-accredited parameter
RL - Reporting / Quantitation Limit for the analysis
S - Spike Recovery outside accepted recovery limits
R - RPD outside accepted recovery limits
E - Value above quantitation range
H - Holding time exceeded

STAT Analysis Corporation
2242 West Harrison St., Suite 200, Chicago, IL 60612-3766
Tel: (312) 733-0551 Fax: (312) 733-2386 STATinfo@STATAnalysis.com
Accreditation Numbers: IEPA ELAP 100445; ORELAP IL300001; AIHA 101160; NVLAP LabCode 101202

Date Reported: July 05, 2013
Date Printed: July 05, 2013

Client: Terracon Consultants, Inc.
Lab Order: 13060930
Project: A2137008, 650 West 83rd Street, Chicago IL
Lab ID: 13060930-009

Client Sample ID: B18 (1-3)
Collection Date 6/26/2013 1:20:00 PM
Matrix: Soil

Analyses	Result	RL	Qualifier	Units	DF	Date Analyzed
Mercury	**SW7471A**			Prep Date: **7/3/2013**		Analyst: **LB**
Mercury	0.096	0.018		mg/Kg-dry	1	7/3/2013
Metals by ICP/MS	**SW6020 (SW3050B)**			Prep Date: **7/1/2013**		Analyst: **JG**
Arsenic	8.1	1.1		mg/Kg-dry	10	7/2/2013
Barium	1500	1.1		mg/Kg-dry	10	7/2/2013
Cadmium	0.82	0.55		mg/Kg-dry	10	7/2/2013
Chromium	23	1.1		mg/Kg-dry	10	7/2/2013
Lead	150	0.55		mg/Kg-dry	10	7/2/2013
Selenium	ND	1.1		mg/Kg-dry	10	7/2/2013
Silver	ND	1.1		mg/Kg-dry	10	7/2/2013
Semivolatile Organic Compounds by GC/MS	**SW8270C (SW3550B)**			Prep Date: **6/27/2013**		Analyst: **DM**
Acenaphthene	ND	0.37		mg/Kg-dry	1	7/1/2013
Acenaphthylene	0.86	0.37		mg/Kg-dry	1	7/1/2013
Anthracene	2.4	0.37		mg/Kg-dry	1	7/1/2013
Benz(a)anthracene	8.2	0.37		mg/Kg-dry	1	7/1/2013
Benzo(a)pyrene	8.7	0.37		mg/Kg-dry	1	7/1/2013
Benzo(b)fluoranthene	8.9	0.37		mg/Kg-dry	1	7/1/2013
Benzo(g,h,i)perylene	4.4	0.37		mg/Kg-dry	1	7/1/2013
Benzo(k)fluoranthene	6.2	0.37		mg/Kg-dry	1	7/1/2013
Chrysene	7.7	0.37		mg/Kg-dry	1	7/1/2013
Dibenz(a,h)anthracene	2.2	0.37		mg/Kg-dry	1	7/1/2013
Fluoranthene	18	0.37		mg/Kg-dry	1	7/1/2013
Fluorene	0.55	0.37		mg/Kg-dry	1	7/1/2013
Indeno(1,2,3-cd)pyrene	4.2	0.37		mg/Kg-dry	1	7/1/2013
Naphthalene	ND	0.37		mg/Kg-dry	1	7/1/2013
Phenanthrene	6.5	0.37		mg/Kg-dry	1	7/1/2013
Pyrene	16	0.37		mg/Kg-dry	1	7/1/2013
Volatile Organic Compounds by GC/MS	**SW5035/8260B**			Prep Date: **6/28/2013**		Analyst: **PS**
Acetone	ND	0.081		mg/Kg-dry	1	7/1/2013
Benzene	ND	0.0054		mg/Kg-dry	1	7/1/2013
Bromodichloromethane	ND	0.0054		mg/Kg-dry	1	7/1/2013
Bromoform	ND	0.0054		mg/Kg-dry	1	7/1/2013
Bromomethane	ND	0.011		mg/Kg-dry	1	7/1/2013
2-Butanone	ND	0.081		mg/Kg-dry	1	7/1/2013
Carbon disulfide	ND	0.054		mg/Kg-dry	1	7/1/2013
Carbon tetrachloride	ND	0.0054		mg/Kg-dry	1	7/1/2013
Chlorobenzene	ND	0.0054		mg/Kg-dry	1	7/1/2013
Chloroethane	ND	0.011		mg/Kg-dry	1	7/1/2013

Qualifiers:
ND - Not Detected at the Reporting Limit
J - Analyte detected below quanititation limits
B - Analyte detected in the associated Method Blank
HT - Sample received past holding time
* - Non-accredited parameter
RL - Reporting / Quantitation Limit for the analysis
S - Spike Recovery outside accepted recovery limits
R - RPD outside accepted recovery limits
E - Value above quantitation range
H - Holding time exceeded

STAT Analysis Corporation
2242 West Harrison St., Suite 200, Chicago, IL 60612-3766
Tel: (312) 733-0551 Fax: (312) 733-2386 STATinfo@STATAnalysis.com
Accreditation Numbers: IEPA ELAP 100445; ORELAP IL300001; AIHA 101160; NVLAP LabCode 101202

Date Reported: July 05, 2013
Date Printed: July 05, 2013

Client: Terracon Consultants, Inc.
Lab Order: 13060930
Project: A2137008, 650 West 83rd Street, Chicago IL
Lab ID: 13060930-009

Client Sample ID: B18 (1-3)
Collection Date 6/26/2013 1:20:00 PM
Matrix: Soil

Analyses	Result	RL	Qualifier	Units	DF	Date Analyzed
Volatile Organic Compounds by GC/MS	**SW5035/8260B**			Prep Date: **6/28/2013**		Analyst: **PS**
Chloroform	ND	0.0054		mg/Kg-dry	1	7/1/2013
Chloromethane	ND	0.011		mg/Kg-dry	1	7/1/2013
Dibromochloromethane	ND	0.0054		mg/Kg-dry	1	7/1/2013
1,1-Dichloroethane	ND	0.0054		mg/Kg-dry	1	7/1/2013
1,2-Dichloroethane	ND	0.0054		mg/Kg-dry	1	7/1/2013
1,1-Dichloroethene	ND	0.0054		mg/Kg-dry	1	7/1/2013
cis-1,2-Dichloroethene	ND	0.0054		mg/Kg-dry	1	7/1/2013
trans-1,2-Dichloroethene	ND	0.0054		mg/Kg-dry	1	7/1/2013
1,2-Dichloropropane	ND	0.0054		mg/Kg-dry	1	7/1/2013
cis-1,3-Dichloropropene	ND	0.0022		mg/Kg-dry	1	7/1/2013
trans-1,3-Dichloropropene	ND	0.0022		mg/Kg-dry	1	7/1/2013
Ethylbenzene	ND	0.0054		mg/Kg-dry	1	7/1/2013
2-Hexanone	ND	0.022		mg/Kg-dry	1	7/1/2013
4-Methyl-2-pentanone	ND	0.022		mg/Kg-dry	1	7/1/2013
Methylene chloride	ND	0.011		mg/Kg-dry	1	7/1/2013
Methyl tert-butyl ether	ND	0.0054		mg/Kg-dry	1	7/1/2013
Styrene	ND	0.0054		mg/Kg-dry	1	7/1/2013
1,1,2,2-Tetrachloroethane	ND	0.0054		mg/Kg-dry	1	7/1/2013
Tetrachloroethene	ND	0.0054		mg/Kg-dry	1	7/1/2013
Toluene	ND	0.0054		mg/Kg-dry	1	7/1/2013
1,1,1-Trichloroethane	ND	0.0054		mg/Kg-dry	1	7/1/2013
1,1,2-Trichloroethane	ND	0.0054		mg/Kg-dry	1	7/1/2013
Trichloroethene	ND	0.0054		mg/Kg-dry	1	7/1/2013
Vinyl chloride	ND	0.0054		mg/Kg-dry	1	7/1/2013
Xylenes, Total	ND	0.016		mg/Kg-dry	1	7/1/2013
Percent Moisture	**D2974**			Prep Date: **6/27/2013**		Analyst: **SDA**
Percent Moisture	11.6	0.2	*	wt%	1	6/27/2013

Qualifiers:
ND - Not Detected at the Reporting Limit
J - Analyte detected below quanititation limits
B - Analyte detected in the associated Method Blank
HT - Sample received past holding time
* - Non-accredited parameter
RL - Reporting / Quantitation Limit for the analysis
S - Spike Recovery outside accepted recovery limits
R - RPD outside accepted recovery limits
E - Value above quantitation range
H - Holding time exceeded

STAT Analysis Corporation
2242 West Harrison St., Suite 200, Chicago, IL 60612-3766
Tel: (312) 733-0551 Fax: (312) 733-2386 STATinfo@STATAnalysis.com
Accreditation Numbers: IEPA ELAP 100445; ORELAP IL300001; AIHA 101160; NVLAP LabCode 101202

Date Reported: July 05, 2013
Date Printed: July 05, 2013

Client: Terracon Consultants, Inc.
Lab Order: 13060930
Project: A2137008, 650 West 83rd Street, Chicago IL
Lab ID: 13060930-010

Client Sample ID: B18 (4-6)
Collection Date 6/26/2013 1:35:00 PM
Matrix: Soil

Analyses	Result	RL	Qualifier	Units	DF	Date Analyzed
Mercury	**SW7471A**			Prep Date: **7/3/2013**		Analyst: **LB**
Mercury	0.053	0.026		mg/Kg-dry	1	7/3/2013
Metals by ICP/MS	**SW6020 (SW3050B)**			Prep Date: **7/1/2013**		Analyst: **JG**
Arsenic	3.3	1.3		mg/Kg-dry	10	7/2/2013
Barium	69	1.3		mg/Kg-dry	10	7/2/2013
Cadmium	ND	0.63		mg/Kg-dry	10	7/2/2013
Chromium	7.9	1.3		mg/Kg-dry	10	7/2/2013
Lead	310	0.63		mg/Kg-dry	10	7/2/2013
Selenium	ND	1.3		mg/Kg-dry	10	7/2/2013
Silver	ND	1.3		mg/Kg-dry	10	7/2/2013
Semivolatile Organic Compounds by GC/MS	**SW8270C (SW3550B)**			Prep Date: **6/27/2013**		Analyst: **DM**
Acenaphthene	ND	0.043		mg/Kg-dry	1	7/1/2013
Acenaphthylene	ND	0.043		mg/Kg-dry	1	7/1/2013
Anthracene	ND	0.043		mg/Kg-dry	1	7/1/2013
Benz(a)anthracene	ND	0.043		mg/Kg-dry	1	7/1/2013
Benzo(a)pyrene	ND	0.043		mg/Kg-dry	1	7/1/2013
Benzo(b)fluoranthene	ND	0.043		mg/Kg-dry	1	7/1/2013
Benzo(g,h,i)perylene	ND	0.043		mg/Kg-dry	1	7/1/2013
Benzo(k)fluoranthene	ND	0.043		mg/Kg-dry	1	7/1/2013
Chrysene	ND	0.043		mg/Kg-dry	1	7/1/2013
Dibenz(a,h)anthracene	ND	0.043		mg/Kg-dry	1	7/1/2013
Fluoranthene	0.044	0.043		mg/Kg-dry	1	7/1/2013
Fluorene	ND	0.043		mg/Kg-dry	1	7/1/2013
Indeno(1,2,3-cd)pyrene	ND	0.043		mg/Kg-dry	1	7/1/2013
Naphthalene	ND	0.043		mg/Kg-dry	1	7/1/2013
Phenanthrene	0.049	0.043		mg/Kg-dry	1	7/1/2013
Pyrene	0.054	0.043		mg/Kg-dry	1	7/1/2013
BTEX by GC/MS	**SW5035/8260B**			Prep Date: **6/28/2013**		Analyst: **ERP**
Benzene	ND	0.0056		mg/Kg-dry	1	7/2/2013
Ethylbenzene	ND	0.0056		mg/Kg-dry	1	7/2/2013
Toluene	ND	0.0056		mg/Kg-dry	1	7/2/2013
Xylenes, Total	ND	0.017		mg/Kg-dry	1	7/2/2013
Percent Moisture	**D2974**			Prep Date: **6/27/2013**		Analyst: **SDA**
Percent Moisture	24.0	0.2	*	wt%	1	6/27/2013

Qualifiers:
ND - Not Detected at the Reporting Limit
J - Analyte detected below quanititation limits
B - Analyte detected in the associated Method Blank
HT - Sample received past holding time
* - Non-accredited parameter
RL - Reporting / Quantitation Limit for the analysis
S - Spike Recovery outside accepted recovery limits
R - RPD outside accepted recovery limits
E - Value above quantitation range
H - Holding time exceeded

STAT Analysis Corporation
2242 West Harrison St., Suite 200, Chicago, IL 60612-3766
Tel: (312) 733-0551 Fax: (312) 733-2386 STATinfo@STATAnalysis.com
Accreditation Numbers: IEPA ELAP 100445; ORELAP IL300001; AIHA 101160; NVLAP LabCode 101202

Date Reported: July 05, 2013
Date Printed: July 05, 2013

Client: Terracon Consultants, Inc.
Lab Order: 13060930
Project: A2137008, 650 West 83rd Street, Chicago IL
Lab ID: 13060930-011

Client Sample ID: B25 (1-3)
Collection Date 6/26/2013 12:40:00 PM
Matrix: Soil

Analyses	Result	RL	Qualifier	Units	DF	Date Analyzed
Mercury	**SW7471A**			Prep Date: **7/3/2013**		Analyst: **LB**
Mercury	0.17	0.022		mg/Kg-dry	1	7/3/2013
Metals by ICP/MS	**SW6020 (SW3050B)**			Prep Date: **7/1/2013**		Analyst: **JG**
Arsenic	11	1.2		mg/Kg-dry	10	7/2/2013
Barium	120	1.2		mg/Kg-dry	10	7/2/2013
Cadmium	ND	0.61		mg/Kg-dry	10	7/2/2013
Chromium	15	1.2		mg/Kg-dry	10	7/2/2013
Lead	150	0.61		mg/Kg-dry	10	7/2/2013
Selenium	ND	1.2		mg/Kg-dry	10	7/2/2013
Silver	ND	1.2		mg/Kg-dry	10	7/2/2013
Semivolatile Organic Compounds by GC/MS	**SW8270C (SW3550B)**			Prep Date: **6/27/2013**		Analyst: **DM**
Acenaphthene	0.17	0.038		mg/Kg-dry	1	7/1/2013
Acenaphthylene	0.21	0.038		mg/Kg-dry	1	7/1/2013
Anthracene	0.99	0.038		mg/Kg-dry	1	7/1/2013
Benz(a)anthracene	2.7	0.038		mg/Kg-dry	1	7/1/2013
Benzo(a)pyrene	2.7	0.038		mg/Kg-dry	1	7/1/2013
Benzo(b)fluoranthene	2.3	0.038		mg/Kg-dry	1	7/1/2013
Benzo(g,h,i)perylene	1.4	0.038		mg/Kg-dry	1	7/1/2013
Benzo(k)fluoranthene	2.1	0.038		mg/Kg-dry	1	7/1/2013
Chrysene	2.6	0.038		mg/Kg-dry	1	7/1/2013
Dibenz(a,h)anthracene	0.65	0.038		mg/Kg-dry	1	7/1/2013
Fluoranthene	6.1	0.19		mg/Kg-dry	5	7/3/2013
Fluorene	0.29	0.038		mg/Kg-dry	1	7/1/2013
Indeno(1,2,3-cd)pyrene	1.2	0.038		mg/Kg-dry	1	7/1/2013
Naphthalene	0.06	0.038		mg/Kg-dry	1	7/1/2013
Phenanthrene	3.1	0.038		mg/Kg-dry	1	7/1/2013
Pyrene	4.9	0.19		mg/Kg-dry	5	7/3/2013
BTEX by GC/MS	**SW5035/8260B**			Prep Date: **6/28/2013**		Analyst: **PS**
Benzene	ND	0.0055		mg/Kg-dry	1	7/1/2013
Ethylbenzene	ND	0.0055		mg/Kg-dry	1	7/1/2013
Toluene	ND	0.0055		mg/Kg-dry	1	7/1/2013
Xylenes, Total	ND	0.016		mg/Kg-dry	1	7/1/2013
Percent Moisture	**D2974**			Prep Date: **6/27/2013**		Analyst: **SDA**
Percent Moisture	13.8	0.2	*	wt%	1	6/27/2013

Qualifiers:
ND - Not Detected at the Reporting Limit
J - Analyte detected below quanititation limits
B - Analyte detected in the associated Method Blank
HT - Sample received past holding time
* - Non-accredited parameter
RL - Reporting / Quantitation Limit for the analysis
S - Spike Recovery outside accepted recovery limits
R - RPD outside accepted recovery limits
E - Value above quantitation range
H - Holding time exceeded

STAT Analysis Corporation
2242 West Harrison St., Suite 200, Chicago, IL 60612-3766
Tel: (312) 733-0551 Fax: (312) 733-2386 STATinfo@STATAnalysis.com
Accreditation Numbers: IEPA ELAP 100445; ORELAP IL300001; AIHA 101160; NVLAP LabCode 101202

Date Reported: July 05, 2013
Date Printed: July 05, 2013

Client: Terracon Consultants, Inc.
Lab Order: 13060930
Project: A2137008, 650 West 83rd Street, Chicago IL
Lab ID: 13060930-012

Client Sample ID: B25 (4-6)
Collection Date 6/26/2013 1:00:00 PM
Matrix: Soil

Analyses	Result	RL	Qualifier	Units	DF	Date Analyzed
Mercury	**SW7471A**			Prep Date: **7/3/2013**		Analyst: **LB**
Mercury	0.046	0.024		mg/Kg-dry	1	7/3/2013
Metals by ICP/MS	**SW6020 (SW3050B)**			Prep Date: **7/1/2013**		Analyst: **JG**
Arsenic	6.5	1.3		mg/Kg-dry	10	7/2/2013
Barium	530	1.3		mg/Kg-dry	10	7/2/2013
Cadmium	1.4	0.63		mg/Kg-dry	10	7/2/2013
Chromium	18	1.3		mg/Kg-dry	10	7/2/2013
Lead	180	0.63		mg/Kg-dry	10	7/2/2013
Selenium	ND	1.3		mg/Kg-dry	10	7/2/2013
Silver	ND	1.3		mg/Kg-dry	10	7/2/2013
Semivolatile Organic Compounds by GC/MS	**SW8270C (SW3550B)**			Prep Date: **6/28/2013**		Analyst: **DM**
Acenaphthene	0.46	0.043		mg/Kg-dry	1	7/1/2013
Acenaphthylene	0.2	0.043		mg/Kg-dry	1	7/1/2013
Anthracene	1.4	0.043		mg/Kg-dry	1	7/1/2013
Benz(a)anthracene	2.3	0.043		mg/Kg-dry	1	7/1/2013
Benzo(a)pyrene	2	0.043		mg/Kg-dry	1	7/1/2013
Benzo(b)fluoranthene	2.1	0.043		mg/Kg-dry	1	7/1/2013
Benzo(g,h,i)perylene	0.94	0.043		mg/Kg-dry	1	7/1/2013
Benzo(k)fluoranthene	1.4	0.043		mg/Kg-dry	1	7/1/2013
Chrysene	2.3	0.043		mg/Kg-dry	1	7/1/2013
Dibenz(a,h)anthracene	0.54	0.043		mg/Kg-dry	1	7/1/2013
Fluoranthene	5.3	0.22		mg/Kg-dry	5	7/3/2013
Fluorene	1.4	0.043		mg/Kg-dry	1	7/1/2013
Indeno(1,2,3-cd)pyrene	0.86	0.043		mg/Kg-dry	1	7/1/2013
Naphthalene	1.2	0.043		mg/Kg-dry	1	7/1/2013
Phenanthrene	5.7	0.22		mg/Kg-dry	5	7/3/2013
Pyrene	4.3	0.043		mg/Kg-dry	1	7/1/2013
BTEX by GC/MS	**SW5035/8260B**			Prep Date: **6/28/2013**		Analyst: **PS**
Benzene	ND	0.0054		mg/Kg-dry	1	7/1/2013
Ethylbenzene	ND	0.0054		mg/Kg-dry	1	7/1/2013
Toluene	ND	0.0054		mg/Kg-dry	1	7/1/2013
Xylenes, Total	ND	0.016		mg/Kg-dry	1	7/1/2013
Percent Moisture	**D2974**			Prep Date: **6/27/2013**		Analyst: **SDA**
Percent Moisture	24.1	0.2	*	wt%	1	6/27/2013

Qualifiers:
ND - Not Detected at the Reporting Limit
J - Analyte detected below quanititation limits
B - Analyte detected in the associated Method Blank
HT - Sample received past holding time
* - Non-accredited parameter
RL - Reporting / Quantitation Limit for the analysis
S - Spike Recovery outside accepted recovery limits
R - RPD outside accepted recovery limits
E - Value above quantitation range
H - Holding time exceeded

STAT Analysis Corporation
2242 West Harrison St., Suite 200, Chicago, IL 60612-3766
Tel: (312) 733-0551 Fax: (312) 733-2386 STATinfo@STATAnalysis.com
Accreditation Numbers: IEPA ELAP 100445; ORELAP IL300001; AIHA 101160; NVLAP LabCode 101202

Date Reported: July 05, 2013
Date Printed: July 05, 2013

Client: Terracon Consultants, Inc.
Lab Order: 13060930
Project: A2137008, 650 West 83rd Street, Chicago IL
Lab ID: 13060930-013

Client Sample ID: B33 (1-3)
Collection Date 6/26/2013 12:00:00 PM
Matrix: Soil

Analyses	Result	RL	Qualifier	Units	DF	Date Analyzed
Mercury	**SW7471A**			Prep Date: **7/3/2013**		Analyst: **LB**
Mercury	0.054	0.023		mg/Kg-dry	1	7/3/2013
Metals by ICP/MS	**SW6020 (SW3050B)**			Prep Date: **7/1/2013**		Analyst: **JG**
Arsenic	6.3	1		mg/Kg-dry	10	7/2/2013
Barium	64	1		mg/Kg-dry	10	7/2/2013
Cadmium	0.52	0.51		mg/Kg-dry	10	7/2/2013
Chromium	17	1		mg/Kg-dry	10	7/2/2013
Lead	110	0.51		mg/Kg-dry	10	7/2/2013
Selenium	ND	1		mg/Kg-dry	10	7/2/2013
Silver	ND	1		mg/Kg-dry	10	7/2/2013
Semivolatile Organic Compounds by GC/MS	**SW8270C (SW3550B)**			Prep Date: **6/28/2013**		Analyst: **DM**
Acenaphthene	0.071	0.038		mg/Kg-dry	1	7/1/2013
Acenaphthylene	0.061	0.038		mg/Kg-dry	1	7/1/2013
Anthracene	0.31	0.038		mg/Kg-dry	1	7/1/2013
Benz(a)anthracene	0.79	0.038		mg/Kg-dry	1	7/1/2013
Benzo(a)pyrene	0.76	0.038		mg/Kg-dry	1	7/1/2013
Benzo(b)fluoranthene	0.72	0.038		mg/Kg-dry	1	7/1/2013
Benzo(g,h,i)perylene	0.45	0.038		mg/Kg-dry	1	7/1/2013
Benzo(k)fluoranthene	0.62	0.038		mg/Kg-dry	1	7/1/2013
Chrysene	0.8	0.038		mg/Kg-dry	1	7/1/2013
Dibenz(a,h)anthracene	0.24	0.038		mg/Kg-dry	1	7/1/2013
Fluoranthene	1.8	0.038		mg/Kg-dry	1	7/1/2013
Fluorene	0.13	0.038		mg/Kg-dry	1	7/1/2013
Indeno(1,2,3-cd)pyrene	0.39	0.038		mg/Kg-dry	1	7/1/2013
Naphthalene	0.049	0.038		mg/Kg-dry	1	7/1/2013
Phenanthrene	1.1	0.038		mg/Kg-dry	1	7/1/2013
Pyrene	1.5	0.038		mg/Kg-dry	1	7/1/2013
BTEX by GC/MS	**SW5035/8260B**			Prep Date: **6/28/2013**		Analyst: **PS**
Benzene	ND	0.0055		mg/Kg-dry	1	7/1/2013
Ethylbenzene	ND	0.0055		mg/Kg-dry	1	7/1/2013
Toluene	ND	0.0055		mg/Kg-dry	1	7/1/2013
Xylenes, Total	ND	0.017		mg/Kg-dry	1	7/1/2013
Percent Moisture	**D2974**			Prep Date: **6/27/2013**		Analyst: **SDA**
Percent Moisture	13.6	0.2	*	wt%	1	6/27/2013

Qualifiers:
ND - Not Detected at the Reporting Limit
J - Analyte detected below quanititation limits
B - Analyte detected in the associated Method Blank
HT - Sample received past holding time
* - Non-accredited parameter
RL - Reporting / Quantitation Limit for the analysis
S - Spike Recovery outside accepted recovery limits
R - RPD outside accepted recovery limits
E - Value above quantitation range
H - Holding time exceeded

STAT Analysis Corporation
2242 West Harrison St., Suite 200, Chicago, IL 60612-3766
Tel: (312) 733-0551 Fax: (312) 733-2386 STATinfo@STATAnalysis.com
Accreditation Numbers: IEPA ELAP 100445; ORELAP IL300001; AIHA 101160; NVLAP LabCode 101202

Date Reported: July 05, 2013
Date Printed: July 05, 2013

Client: Terracon Consultants, Inc.
Lab Order: 13060930
Project: A2137008, 650 West 83rd Street, Chicago IL
Lab ID: 13060930-014

Client Sample ID: B33 (4-6)
Collection Date 6/26/2013 12:30:00 PM
Matrix: Soil

Analyses	Result	RL	Qualifier	Units	DF	Date Analyzed
Mercury	**SW7471A**			Prep Date: **7/3/2013**		Analyst: **LB**
Mercury	0.14	0.024		mg/Kg-dry	1	7/3/2013
Metals by ICP/MS	**SW6020 (SW3050B)**			Prep Date: **7/1/2013**		Analyst: **JG**
Arsenic	6.4	1.3		mg/Kg-dry	10	7/2/2013
Barium	110	1.3		mg/Kg-dry	10	7/2/2013
Cadmium	ND	0.64		mg/Kg-dry	10	7/2/2013
Chromium	9.8	1.3		mg/Kg-dry	10	7/2/2013
Lead	44	0.64		mg/Kg-dry	10	7/2/2013
Selenium	ND	1.3		mg/Kg-dry	10	7/2/2013
Silver	ND	1.3		mg/Kg-dry	10	7/2/2013
Semivolatile Organic Compounds by GC/MS	**SW8270C (SW3550B)**			Prep Date: **6/28/2013**		Analyst: **DM**
Acenaphthene	0.069	0.041		mg/Kg-dry	1	7/1/2013
Acenaphthylene	0.14	0.041		mg/Kg-dry	1	7/1/2013
Anthracene	0.5	0.041		mg/Kg-dry	1	7/1/2013
Benz(a)anthracene	1.6	0.041		mg/Kg-dry	1	7/1/2013
Benzo(a)pyrene	1.4	0.041		mg/Kg-dry	1	7/1/2013
Benzo(b)fluoranthene	1.3	0.041		mg/Kg-dry	1	7/1/2013
Benzo(g,h,i)perylene	0.77	0.041		mg/Kg-dry	1	7/1/2013
Benzo(k)fluoranthene	1.1	0.041		mg/Kg-dry	1	7/1/2013
Chrysene	1.5	0.041		mg/Kg-dry	1	7/1/2013
Dibenz(a,h)anthracene	0.38	0.041		mg/Kg-dry	1	7/1/2013
Fluoranthene	3.5	0.041		mg/Kg-dry	1	7/1/2013
Fluorene	0.16	0.041		mg/Kg-dry	1	7/1/2013
Indeno(1,2,3-cd)pyrene	0.69	0.041		mg/Kg-dry	1	7/1/2013
Naphthalene	ND	0.041		mg/Kg-dry	1	7/1/2013
Phenanthrene	1.6	0.041		mg/Kg-dry	1	7/1/2013
Pyrene	2.9	0.041		mg/Kg-dry	1	7/1/2013
Volatile Organic Compounds by GC/MS	**SW5035/8260B**			Prep Date: **6/28/2013**		Analyst: **PS**
Acetone	ND	0.072		mg/Kg-dry	1	7/1/2013
Benzene	ND	0.0048		mg/Kg-dry	1	7/1/2013
Bromodichloromethane	ND	0.0048		mg/Kg-dry	1	7/1/2013
Bromoform	ND	0.0048		mg/Kg-dry	1	7/1/2013
Bromomethane	ND	0.0096		mg/Kg-dry	1	7/1/2013
2-Butanone	ND	0.072		mg/Kg-dry	1	7/1/2013
Carbon disulfide	ND	0.048		mg/Kg-dry	1	7/1/2013
Carbon tetrachloride	ND	0.0048		mg/Kg-dry	1	7/1/2013
Chlorobenzene	ND	0.0048		mg/Kg-dry	1	7/1/2013
Chloroethane	ND	0.0096		mg/Kg-dry	1	7/1/2013

Qualifiers:
ND - Not Detected at the Reporting Limit
J - Analyte detected below quanititation limits
B - Analyte detected in the associated Method Blank
HT - Sample received past holding time
* - Non-accredited parameter
RL - Reporting / Quantitation Limit for the analysis
S - Spike Recovery outside accepted recovery limits
R - RPD outside accepted recovery limits
E - Value above quantitation range
H - Holding time exceeded

STAT Analysis Corporation
2242 West Harrison St., Suite 200, Chicago, IL 60612-3766
Tel: (312) 733-0551 Fax: (312) 733-2386 STATinfo@STATAnalysis.com
Accreditation Numbers: IEPA ELAP 100445; ORELAP IL300001; AIHA 101160; NVLAP LabCode 101202

Date Reported: July 05, 2013
Date Printed: July 05, 2013

Client: Terracon Consultants, Inc.
Lab Order: 13060930
Project: A2137008, 650 West 83rd Street, Chicago IL
Lab ID: 13060930-014

Client Sample ID: B33 (4-6)
Collection Date 6/26/2013 12:30:00 PM
Matrix: Soil

Analyses	Result	RL	Qualifier	Units	DF	Date Analyzed
Volatile Organic Compounds by GC/MS	**SW5035/8260B**			Prep Date: **6/28/2013**		Analyst: **PS**
Chloroform	ND	0.0048		mg/Kg-dry	1	7/1/2013
Chloromethane	ND	0.0096		mg/Kg-dry	1	7/1/2013
Dibromochloromethane	ND	0.0048		mg/Kg-dry	1	7/1/2013
1,1-Dichloroethane	ND	0.0048		mg/Kg-dry	1	7/1/2013
1,2-Dichloroethane	ND	0.0048		mg/Kg-dry	1	7/1/2013
1,1-Dichloroethene	ND	0.0048		mg/Kg-dry	1	7/1/2013
cis-1,2-Dichloroethene	ND	0.0048		mg/Kg-dry	1	7/1/2013
trans-1,2-Dichloroethene	ND	0.0048		mg/Kg-dry	1	7/1/2013
1,2-Dichloropropane	ND	0.0048		mg/Kg-dry	1	7/1/2013
cis-1,3-Dichloropropene	ND	0.0019		mg/Kg-dry	1	7/1/2013
trans-1,3-Dichloropropene	ND	0.0019		mg/Kg-dry	1	7/1/2013
Ethylbenzene	ND	0.0048		mg/Kg-dry	1	7/1/2013
2-Hexanone	ND	0.019		mg/Kg-dry	1	7/1/2013
4-Methyl-2-pentanone	ND	0.019		mg/Kg-dry	1	7/1/2013
Methylene chloride	ND	0.0096		mg/Kg-dry	1	7/1/2013
Methyl tert-butyl ether	ND	0.0048		mg/Kg-dry	1	7/1/2013
Styrene	ND	0.0048		mg/Kg-dry	1	7/1/2013
1,1,2,2-Tetrachloroethane	ND	0.0048		mg/Kg-dry	1	7/1/2013
Tetrachloroethene	ND	0.0048		mg/Kg-dry	1	7/1/2013
Toluene	ND	0.0048		mg/Kg-dry	1	7/1/2013
1,1,1-Trichloroethane	ND	0.0048		mg/Kg-dry	1	7/1/2013
1,1,2-Trichloroethane	ND	0.0048		mg/Kg-dry	1	7/1/2013
Trichloroethene	ND	0.0048		mg/Kg-dry	1	7/1/2013
Vinyl chloride	ND	0.0048		mg/Kg-dry	1	7/1/2013
Xylenes, Total	ND	0.014		mg/Kg-dry	1	7/1/2013
Percent Moisture	**D2974**			Prep Date: **6/27/2013**		Analyst: **SDA**
Percent Moisture	19.3	0.2	*	wt%	1	6/27/2013

Qualifiers:
ND - Not Detected at the Reporting Limit
J - Analyte detected below quanititation limits
B - Analyte detected in the associated Method Blank
HT - Sample received past holding time
* - Non-accredited parameter
RL - Reporting / Quantitation Limit for the analysis
S - Spike Recovery outside accepted recovery limits
R - RPD outside accepted recovery limits
E - Value above quantitation range
H - Holding time exceeded

STAT Analysis Corporation
2242 West Harrison St., Suite 200, Chicago, IL 60612-3766
Tel: (312) 733-0551 Fax: (312) 733-2386 STATinfo@STATAnalysis.com
Accreditation Numbers: IEPA ELAP 100445; ORELAP IL300001; AIHA 101160; NVLAP LabCode 101202

Date Reported: July 05, 2013
Date Printed: July 05, 2013

Client: Terracon Consultants, Inc.
Lab Order: 13060930
Project: A2137008, 650 West 83rd Street, Chicago IL
Lab ID: 13060930-015

Client Sample ID: B32 (1-3)
Collection Date 6/26/2013 11:30:00 AM
Matrix: Soil

Analyses	Result	RL	Qualifier	Units	DF	Date Analyzed
Mercury	**SW7471A**			Prep Date: **7/3/2013**		Analyst: **LB**
Mercury	0.12	0.021		mg/Kg-dry	1	7/3/2013
Metals by ICP/MS	**SW6020 (SW3050B)**			Prep Date: **7/1/2013**		Analyst: **JG**
Arsenic	8.8	1.1		mg/Kg-dry	10	7/2/2013
Barium	200	1.1		mg/Kg-dry	10	7/2/2013
Cadmium	0.81	0.55		mg/Kg-dry	10	7/2/2013
Chromium	16	1.1		mg/Kg-dry	10	7/2/2013
Lead	260	0.55		mg/Kg-dry	10	7/2/2013
Selenium	ND	1.1		mg/Kg-dry	10	7/2/2013
Silver	ND	1.1		mg/Kg-dry	10	7/2/2013
Semivolatile Organic Compounds by GC/MS	**SW8270C (SW3550B)**			Prep Date: **6/28/2013**		Analyst: **DM**
Acenaphthene	0.1	0.038		mg/Kg-dry	1	7/1/2013
Acenaphthylene	0.19	0.038		mg/Kg-dry	1	7/1/2013
Anthracene	0.51	0.038		mg/Kg-dry	1	7/1/2013
Benz(a)anthracene	1.8	0.038		mg/Kg-dry	1	7/1/2013
Benzo(a)pyrene	2.1	0.038		mg/Kg-dry	1	7/1/2013
Benzo(b)fluoranthene	2	0.038		mg/Kg-dry	1	7/1/2013
Benzo(g,h,i)perylene	1.2	0.038		mg/Kg-dry	1	7/1/2013
Benzo(k)fluoranthene	1.6	0.038		mg/Kg-dry	1	7/1/2013
Chrysene	2	0.038		mg/Kg-dry	1	7/1/2013
Dibenz(a,h)anthracene	0.57	0.038		mg/Kg-dry	1	7/1/2013
Fluoranthene	3.8	0.038		mg/Kg-dry	1	7/1/2013
Fluorene	0.12	0.038		mg/Kg-dry	1	7/1/2013
Indeno(1,2,3-cd)pyrene	1.1	0.038		mg/Kg-dry	1	7/1/2013
Naphthalene	0.095	0.038		mg/Kg-dry	1	7/1/2013
Phenanthrene	1.8	0.038		mg/Kg-dry	1	7/1/2013
Pyrene	3.5	0.038		mg/Kg-dry	1	7/1/2013
BTEX by GC/MS	**SW5035/8260B**			Prep Date: **6/28/2013**		Analyst: **PS**
Benzene	ND	0.0055		mg/Kg-dry	1	7/1/2013
Ethylbenzene	ND	0.0055		mg/Kg-dry	1	7/1/2013
Toluene	ND	0.0055		mg/Kg-dry	1	7/1/2013
Xylenes, Total	ND	0.017		mg/Kg-dry	1	7/1/2013
Percent Moisture	**D2974**			Prep Date: **6/27/2013**		Analyst: **SDA**
Percent Moisture	13.3	0.2	*	wt%	1	6/27/2013

Qualifiers:

ND - Not Detected at the Reporting Limit
J - Analyte detected below quanititation limits
B - Analyte detected in the associated Method Blank
HT - Sample received past holding time
* - Non-accredited parameter
RL - Reporting / Quantitation Limit for the analysis
S - Spike Recovery outside accepted recovery limits
R - RPD outside accepted recovery limits
E - Value above quantitation range
H - Holding time exceeded

STAT Analysis Corporation
2242 West Harrison St., Suite 200, Chicago, IL 60612-3766
Tel: (312) 733-0551 Fax: (312) 733-2386 STATinfo@STATAnalysis.com
Accreditation Numbers: IEPA ELAP 100445; ORELAP IL300001; AIHA 101160; NVLAP LabCode 101202

Date Reported: July 05, 2013
Date Printed: July 05, 2013

Client: Terracon Consultants, Inc.
Lab Order: 13060930
Project: A2137008, 650 West 83rd Street, Chicago IL
Lab ID: 13060930-016

Client Sample ID: B32 (6-8)
Collection Date 6/26/2013 11:50:00 AM
Matrix: Soil

Analyses	Result	RL	Qualifier	Units	DF	Date Analyzed
Mercury	**SW7471A**			Prep Date: **7/3/2013**		Analyst: **LB**
Mercury	0.039	0.031		mg/Kg-dry	1	7/3/2013
Metals by ICP/MS	**SW6020 (SW3050B)**			Prep Date: **7/1/2013**		Analyst: **JG**
Arsenic	6.8	1.8		mg/Kg-dry	10	7/2/2013
Barium	110	1.8		mg/Kg-dry	10	7/2/2013
Cadmium	ND	0.9		mg/Kg-dry	10	7/2/2013
Chromium	28	1.8		mg/Kg-dry	10	7/2/2013
Lead	29	0.9		mg/Kg-dry	10	7/2/2013
Selenium	ND	1.8		mg/Kg-dry	10	7/2/2013
Silver	ND	1.8		mg/Kg-dry	10	7/2/2013
Semivolatile Organic Compounds by GC/MS	**SW8270C (SW3550B)**			Prep Date: **6/28/2013**		Analyst: **DM**
Acenaphthene	ND	0.058		mg/Kg-dry	1	7/1/2013
Acenaphthylene	ND	0.058		mg/Kg-dry	1	7/1/2013
Anthracene	ND	0.058		mg/Kg-dry	1	7/1/2013
Benz(a)anthracene	ND	0.058		mg/Kg-dry	1	7/1/2013
Benzo(a)pyrene	ND	0.058		mg/Kg-dry	1	7/1/2013
Benzo(b)fluoranthene	ND	0.058		mg/Kg-dry	1	7/1/2013
Benzo(g,h,i)perylene	ND	0.058		mg/Kg-dry	1	7/1/2013
Benzo(k)fluoranthene	ND	0.058		mg/Kg-dry	1	7/1/2013
Chrysene	ND	0.058		mg/Kg-dry	1	7/1/2013
Dibenz(a,h)anthracene	ND	0.058		mg/Kg-dry	1	7/1/2013
Fluoranthene	ND	0.058		mg/Kg-dry	1	7/1/2013
Fluorene	ND	0.058		mg/Kg-dry	1	7/1/2013
Indeno(1,2,3-cd)pyrene	ND	0.058		mg/Kg-dry	1	7/1/2013
Naphthalene	ND	0.058		mg/Kg-dry	1	7/1/2013
Phenanthrene	ND	0.058		mg/Kg-dry	1	7/1/2013
Pyrene	ND	0.058		mg/Kg-dry	1	7/1/2013
BTEX by GC/MS	**SW5035/8260B**			Prep Date: **6/28/2013**		Analyst: **PS**
Benzene	ND	0.0089		mg/Kg-dry	1	7/1/2013
Ethylbenzene	ND	0.0089		mg/Kg-dry	1	7/1/2013
Toluene	ND	0.0089		mg/Kg-dry	1	7/1/2013
Xylenes, Total	ND	0.027		mg/Kg-dry	1	7/1/2013
Percent Moisture	**D2974**			Prep Date: **6/27/2013**		Analyst: **SDA**
Percent Moisture	42.9	0.2	*	wt%	1	6/27/2013

Qualifiers:
ND - Not Detected at the Reporting Limit
J - Analyte detected below quanititation limits
B - Analyte detected in the associated Method Blank
HT - Sample received past holding time
* - Non-accredited parameter
RL - Reporting / Quantitation Limit for the analysis
S - Spike Recovery outside accepted recovery limits
R - RPD outside accepted recovery limits
E - Value above quantitation range
H - Holding time exceeded

STAT Analysis Corporation
2242 West Harrison St., Suite 200, Chicago, IL 60612-3766
Tel: (312) 733-0551 Fax: (312) 733-2386 STATinfo@STATAnalysis.com
Accreditation Numbers: IEPA ELAP 100445; ORELAP IL300001; AIHA 101160; NVLAP LabCode 101202

Date Reported: July 05, 2013
Date Printed: July 05, 2013

Client: Terracon Consultants, Inc.
Lab Order: 13060930
Project: A2137008, 650 West 83rd Street, Chicago IL
Lab ID: 13060930-017

Client Sample ID: B35 (1-3)
Collection Date 6/26/2013 10:30:00 AM
Matrix: Soil

Analyses	Result	RL	Qualifier	Units	DF	Date Analyzed
Mercury	**SW7471A**			Prep Date: **7/3/2013**		Analyst: **LB**
Mercury	0.75	0.022		mg/Kg-dry	1	7/3/2013
Metals by ICP/MS	**SW6020 (SW3050B)**			Prep Date: **7/1/2013**		Analyst: **JG**
Arsenic	16	1.2		mg/Kg-dry	10	7/2/2013
Barium	660	1.2		mg/Kg-dry	10	7/2/2013
Cadmium	2.5	0.62		mg/Kg-dry	10	7/2/2013
Chromium	24	1.2		mg/Kg-dry	10	7/2/2013
Lead	680	0.62		mg/Kg-dry	10	7/2/2013
Selenium	ND	1.2		mg/Kg-dry	10	7/2/2013
Silver	ND	1.2		mg/Kg-dry	10	7/2/2013
Semivolatile Organic Compounds by GC/MS	**SW8270C (SW3550B)**			Prep Date: **6/28/2013**		Analyst: **DM**
Acenaphthene	5.6	0.4		mg/Kg-dry	10	7/3/2013
Acenaphthylene	1.2	0.04		mg/Kg-dry	1	7/1/2013
Anthracene	15	0.4		mg/Kg-dry	10	7/3/2013
Benz(a)anthracene	23	0.4		mg/Kg-dry	10	7/3/2013
Benzo(a)pyrene	21	0.4		mg/Kg-dry	10	7/3/2013
Benzo(b)fluoranthene	17	0.4		mg/Kg-dry	10	7/3/2013
Benzo(g,h,i)perylene	9.8	0.4		mg/Kg-dry	10	7/3/2013
Benzo(k)fluoranthene	18	0.4		mg/Kg-dry	10	7/3/2013
Chrysene	23	0.4		mg/Kg-dry	10	7/3/2013
Dibenz(a,h)anthracene	5.5	0.4		mg/Kg-dry	10	7/3/2013
Fluoranthene	48	2		mg/Kg-dry	50	7/3/2013
Fluorene	8.7	0.4		mg/Kg-dry	10	7/3/2013
Indeno(1,2,3-cd)pyrene	7.7	2		mg/Kg-dry	50	7/3/2013
Naphthalene	8.1	0.4		mg/Kg-dry	10	7/3/2013
Phenanthrene	46	0.4		mg/Kg-dry	10	7/3/2013
Pyrene	42	0.4		mg/Kg-dry	10	7/3/2013
BTEX by GC/MS	**SW5035/8260B**			Prep Date: **6/28/2013**		Analyst: **PS**
Benzene	ND	0.0052		mg/Kg-dry	1	7/1/2013
Ethylbenzene	ND	0.0052		mg/Kg-dry	1	7/1/2013
Toluene	ND	0.0052		mg/Kg-dry	1	7/1/2013
Xylenes, Total	ND	0.016		mg/Kg-dry	1	7/1/2013
Percent Moisture	**D2974**			Prep Date: **6/27/2013**		Analyst: **SDA**
Percent Moisture	18.3	0.2	*	wt%	1	6/27/2013

Qualifiers:
ND - Not Detected at the Reporting Limit
J - Analyte detected below quanititation limits
B - Analyte detected in the associated Method Blank
HT - Sample received past holding time
* - Non-accredited parameter
RL - Reporting / Quantitation Limit for the analysis
S - Spike Recovery outside accepted recovery limits
R - RPD outside accepted recovery limits
E - Value above quantitation range
H - Holding time exceeded

STAT Analysis Corporation
2242 West Harrison St., Suite 200, Chicago, IL 60612-3766
Tel: (312) 733-0551 Fax: (312) 733-2386 STATinfo@STATAnalysis.com
Accreditation Numbers: IEPA ELAP 100445; ORELAP IL300001; AIHA 101160; NVLAP LabCode 101202

Date Reported: July 05, 2013
Date Printed: July 05, 2013

Client: Terracon Consultants, Inc.
Lab Order: 13060930
Project: A2137008, 650 West 83rd Street, Chicago IL
Lab ID: 13060930-018

Client Sample ID: B35 (4-6)
Collection Date 6/26/2013 10:40:00 AM
Matrix: Soil

Analyses	Result	RL	Qualifier	Units	DF	Date Analyzed
Mercury	**SW7471A**			Prep Date: **7/3/2013**		Analyst: **LB**
Mercury	1.5	0.14		mg/Kg-dry	5	7/3/2013
Metals by ICP/MS	**SW6020 (SW3050B)**			Prep Date: **7/1/2013**		Analyst: **JG**
Arsenic	24	1.5		mg/Kg-dry	10	7/2/2013
Barium	1000	1.5		mg/Kg-dry	10	7/2/2013
Cadmium	6.6	0.77		mg/Kg-dry	10	7/2/2013
Chromium	39	1.5		mg/Kg-dry	10	7/2/2013
Lead	920	0.77		mg/Kg-dry	10	7/2/2013
Selenium	ND	1.5		mg/Kg-dry	10	7/2/2013
Silver	2.7	1.5		mg/Kg-dry	10	7/2/2013
Semivolatile Organic Compounds by GC/MS	**SW8270C (SW3550B)**			Prep Date: **6/28/2013**		Analyst: **DM**
Acenaphthene	17	0.48		mg/Kg-dry	1	7/1/2013
Acenaphthylene	2.2	0.48		mg/Kg-dry	1	7/1/2013
Anthracene	42	0.48		mg/Kg-dry	1	7/1/2013
Benz(a)anthracene	72	4.8		mg/Kg-dry	10	7/3/2013
Benzo(a)pyrene	67	4.8		mg/Kg-dry	10	7/3/2013
Benzo(b)fluoranthene	57	0.48		mg/Kg-dry	1	7/1/2013
Benzo(g,h,i)perylene	32	0.48		mg/Kg-dry	1	7/1/2013
Benzo(k)fluoranthene	52	0.48		mg/Kg-dry	1	7/1/2013
Chrysene	77	4.8		mg/Kg-dry	10	7/3/2013
Dibenz(a,h)anthracene	16	0.48		mg/Kg-dry	1	7/1/2013
Fluoranthene	180	4.8		mg/Kg-dry	10	7/3/2013
Fluorene	20	0.48		mg/Kg-dry	1	7/1/2013
Indeno(1,2,3-cd)pyrene	28	0.48		mg/Kg-dry	1	7/1/2013
Naphthalene	2.9	0.48		mg/Kg-dry	1	7/1/2013
Phenanthrene	160	4.8		mg/Kg-dry	10	7/3/2013
Pyrene	160	4.8		mg/Kg-dry	10	7/3/2013
BTEX by GC/MS	**SW5035/8260B**			Prep Date: **6/28/2013**		Analyst: **PS**
Benzene	ND	0.008		mg/Kg-dry	1	7/2/2013
Ethylbenzene	ND	0.008		mg/Kg-dry	1	7/2/2013
Toluene	ND	0.008		mg/Kg-dry	1	7/2/2013
Xylenes, Total	ND	0.024		mg/Kg-dry	1	7/2/2013
Percent Moisture	**D2974**			Prep Date: **6/27/2013**		Analyst: **SDA**
Percent Moisture	31.8	0.2	*	wt%	1	6/27/2013

Qualifiers:
ND - Not Detected at the Reporting Limit
J - Analyte detected below quanititation limits
B - Analyte detected in the associated Method Blank
HT - Sample received past holding time
* - Non-accredited parameter
RL - Reporting / Quantitation Limit for the analysis
S - Spike Recovery outside accepted recovery limits
R - RPD outside accepted recovery limits
E - Value above quantitation range
H - Holding time exceeded

STAT Analysis Corporation
2242 West Harrison St., Suite 200, Chicago, IL 60612-3766
Tel: (312) 733-0551 Fax: (312) 733-2386 STATinfo@STATAnalysis.com
Accreditation Numbers: IEPA ELAP 100445; ORELAP IL300001; AIHA 101160; NVLAP LabCode 101202

Date Reported: July 05, 2013
Date Printed: July 05, 2013

Client: Terracon Consultants, Inc.
Lab Order: 13060930
Project: A2137008, 650 West 83rd Street, Chicago IL
Lab ID: 13060930-019

Client Sample ID: B27 (1-3)
Collection Date 6/26/2013 9:30:00 AM
Matrix: Soil

Analyses	Result	RL	Qualifier	Units	DF	Date Analyzed
Mercury	**SW7471A**			Prep Date: **7/3/2013**		Analyst: **LB**
Mercury	0.47	0.023		mg/Kg-dry	1	7/3/2013
Metals by ICP/MS	**SW6020 (SW3050B)**			Prep Date: **7/1/2013**		Analyst: **JG**
Arsenic	19	1.2		mg/Kg-dry	10	7/2/2013
Barium	350	1.2		mg/Kg-dry	10	7/2/2013
Cadmium	2.3	0.58		mg/Kg-dry	10	7/2/2013
Chromium	23	1.2		mg/Kg-dry	10	7/2/2013
Lead	790	0.58		mg/Kg-dry	10	7/2/2013
Selenium	1.2	1.2		mg/Kg-dry	10	7/2/2013
Silver	ND	1.2		mg/Kg-dry	10	7/2/2013
Semivolatile Organic Compounds by GC/MS	**SW8270C (SW3550B)**			Prep Date: **6/28/2013**		Analyst: **DM**
Acenaphthene	0.94	0.039		mg/Kg-dry	1	7/1/2013
Acenaphthylene	0.52	0.039		mg/Kg-dry	1	7/1/2013
Anthracene	3.7	0.039		mg/Kg-dry	1	7/1/2013
Benz(a)anthracene	8.7	0.39		mg/Kg-dry	10	7/3/2013
Benzo(a)pyrene	8.1	0.39		mg/Kg-dry	10	7/3/2013
Benzo(b)fluoranthene	8	0.39		mg/Kg-dry	10	7/3/2013
Benzo(g,h,i)perylene	4.1	0.039		mg/Kg-dry	1	7/1/2013
Benzo(k)fluoranthene	6.4	0.39		mg/Kg-dry	10	7/3/2013
Chrysene	8.8	0.39		mg/Kg-dry	10	7/3/2013
Dibenz(a,h)anthracene	2.3	0.039		mg/Kg-dry	1	7/1/2013
Fluoranthene	20	0.39		mg/Kg-dry	10	7/3/2013
Fluorene	1.4	0.039		mg/Kg-dry	1	7/1/2013
Indeno(1,2,3-cd)pyrene	3.9	0.039		mg/Kg-dry	1	7/1/2013
Naphthalene	0.12	0.039		mg/Kg-dry	1	7/1/2013
Phenanthrene	11	0.39		mg/Kg-dry	10	7/3/2013
Pyrene	16	0.39		mg/Kg-dry	10	7/3/2013
BTEX by GC/MS	**SW5035/8260B**			Prep Date: **6/28/2013**		Analyst: **PS**
Benzene	ND	0.0057		mg/Kg-dry	1	7/2/2013
Ethylbenzene	ND	0.0057		mg/Kg-dry	1	7/2/2013
Toluene	ND	0.0057		mg/Kg-dry	1	7/2/2013
Xylenes, Total	ND	0.017		mg/Kg-dry	1	7/2/2013
Percent Moisture	**D2974**			Prep Date: **6/27/2013**		Analyst: **SDA**
Percent Moisture	16.8	0.2	*	wt%	1	6/27/2013

Qualifiers:
ND - Not Detected at the Reporting Limit
J - Analyte detected below quanititation limits
B - Analyte detected in the associated Method Blank
HT - Sample received past holding time
* - Non-accredited parameter
RL - Reporting / Quantitation Limit for the analysis
S - Spike Recovery outside accepted recovery limits
R - RPD outside accepted recovery limits
E - Value above quantitation range
H - Holding time exceeded

STAT Analysis Corporation
2242 West Harrison St., Suite 200, Chicago, IL 60612-3766
Tel: (312) 733-0551 Fax: (312) 733-2386 STATinfo@STATAnalysis.com
Accreditation Numbers: IEPA ELAP 100445; ORELAP IL300001; AIHA 101160; NVLAP LabCode 101202

Date Reported: July 05, 2013
Date Printed: July 05, 2013

Client: Terracon Consultants, Inc.
Lab Order: 13060930
Project: A2137008, 650 West 83rd Street, Chicago IL
Lab ID: 13060930-020

Client Sample ID: B27 (6-8)
Collection Date 6/26/2013 9:40:00 AM
Matrix: Soil

Analyses	Result	RL	Qualifier	Units	DF	Date Analyzed
Mercury	**SW7471A**			Prep Date: **7/3/2013**		Analyst: **LB**
Mercury	0.38	0.024		mg/Kg-dry	1	7/3/2013
Metals by ICP/MS	**SW6020 (SW3050B)**			Prep Date: **7/1/2013**		Analyst: **JG**
Arsenic	13	1.4		mg/Kg-dry	10	7/2/2013
Barium	340	1.4		mg/Kg-dry	10	7/2/2013
Cadmium	4.3	0.69		mg/Kg-dry	10	7/2/2013
Chromium	40	1.4		mg/Kg-dry	10	7/2/2013
Lead	620	0.69		mg/Kg-dry	10	7/2/2013
Selenium	ND	1.4		mg/Kg-dry	10	7/2/2013
Silver	1.4	1.4		mg/Kg-dry	10	7/2/2013
Semivolatile Organic Compounds by GC/MS	**SW8270C (SW3550B)**			Prep Date: **6/28/2013**		Analyst: **DM**
Acenaphthene	0.13	0.046		mg/Kg-dry	1	7/1/2013
Acenaphthylene	0.055	0.046		mg/Kg-dry	1	7/1/2013
Anthracene	0.24	0.046		mg/Kg-dry	1	7/1/2013
Benz(a)anthracene	0.79	0.046		mg/Kg-dry	1	7/1/2013
Benzo(a)pyrene	0.89	0.046		mg/Kg-dry	1	7/1/2013
Benzo(b)fluoranthene	1	0.046		mg/Kg-dry	1	7/1/2013
Benzo(g,h,i)perylene	0.65	0.046		mg/Kg-dry	1	7/1/2013
Benzo(k)fluoranthene	0.67	0.046		mg/Kg-dry	1	7/1/2013
Chrysene	1.1	0.046		mg/Kg-dry	1	7/1/2013
Dibenz(a,h)anthracene	0.31	0.046		mg/Kg-dry	1	7/1/2013
Fluoranthene	1.6	0.046		mg/Kg-dry	1	7/1/2013
Fluorene	0.13	0.046		mg/Kg-dry	1	7/1/2013
Indeno(1,2,3-cd)pyrene	0.49	0.046		mg/Kg-dry	1	7/1/2013
Naphthalene	0.24	0.046		mg/Kg-dry	1	7/1/2013
Phenanthrene	1.3	0.046		mg/Kg-dry	1	7/1/2013
Pyrene	1.7	0.046		mg/Kg-dry	1	7/1/2013
BTEX by GC/MS	**SW5035/8260B**			Prep Date: **6/28/2013**		Analyst: **PS**
Benzene	ND	0.0054		mg/Kg-dry	1	7/2/2013
Ethylbenzene	ND	0.0054		mg/Kg-dry	1	7/2/2013
Toluene	ND	0.0054		mg/Kg-dry	1	7/2/2013
Xylenes, Total	ND	0.016		mg/Kg-dry	1	7/2/2013
Percent Moisture	**D2974**			Prep Date: **6/27/2013**		Analyst: **SDA**
Percent Moisture	28.1	0.2	*	wt%	1	6/27/2013

Qualifiers:
ND - Not Detected at the Reporting Limit
J - Analyte detected below quanititation limits
B - Analyte detected in the associated Method Blank
HT - Sample received past holding time
* - Non-accredited parameter
RL - Reporting / Quantitation Limit for the analysis
S - Spike Recovery outside accepted recovery limits
R - RPD outside accepted recovery limits
E - Value above quantitation range
H - Holding time exceeded

STAT Analysis Corporation
2242 West Harrison St., Suite 200, Chicago, IL 60612-3766
Tel: (312) 733-0551 Fax: (312) 733-2386 STATinfo@STATAnalysis.com
Accreditation Numbers: IEPA ELAP 100445; ORELAP IL300001; AIHA 101160; NVLAP LabCode 101202

Date Reported: July 05, 2013
Date Printed: July 05, 2013

Client: Terracon Consultants, Inc.
Lab Order: 13060930
Project: A2137008, 650 West 83rd Street, Chicago IL
Lab ID: 13060930-021

Client Sample ID: B36 (1-3)
Collection Date 6/26/2013 10:00:00 AM
Matrix: Soil

Analyses	Result	RL	Qualifier	Units	DF	Date Analyzed
Mercury	**SW7471A**			Prep Date: **7/3/2013**		Analyst: **LB**
Mercury	0.098	0.021		mg/Kg-dry	1	7/3/2013
Metals by ICP/MS	**SW6020 (SW3050B)**			Prep Date: **7/1/2013**		Analyst: **JG**
Arsenic	9.5	1.1		mg/Kg-dry	10	7/1/2013
Barium	4000	1.1		mg/Kg-dry	10	7/1/2013
Cadmium	1.9	0.55		mg/Kg-dry	10	7/1/2013
Chromium	19	1.1		mg/Kg-dry	10	7/1/2013
Lead	160	0.55		mg/Kg-dry	10	7/1/2013
Selenium	ND	1.1		mg/Kg-dry	10	7/1/2013
Silver	ND	1.1		mg/Kg-dry	10	7/1/2013
Semivolatile Organic Compounds by GC/MS	**SW8270C (SW3550B)**			Prep Date: **6/28/2013**		Analyst: **DM**
Acenaphthene	0.05	0.037		mg/Kg-dry	1	7/1/2013
Acenaphthylene	0.05	0.037		mg/Kg-dry	1	7/1/2013
Anthracene	0.12	0.037		mg/Kg-dry	1	7/1/2013
Benz(a)anthracene	0.63	0.037		mg/Kg-dry	1	7/1/2013
Benzo(a)pyrene	0.79	0.037		mg/Kg-dry	1	7/1/2013
Benzo(b)fluoranthene	0.79	0.037		mg/Kg-dry	1	7/1/2013
Benzo(g,h,i)perylene	0.51	0.037		mg/Kg-dry	1	7/1/2013
Benzo(k)fluoranthene	0.84	0.037		mg/Kg-dry	1	7/1/2013
Chrysene	0.83	0.037		mg/Kg-dry	1	7/1/2013
Dibenz(a,h)anthracene	0.25	0.037		mg/Kg-dry	1	7/1/2013
Fluoranthene	1.3	0.037		mg/Kg-dry	1	7/1/2013
Fluorene	0.039	0.037		mg/Kg-dry	1	7/1/2013
Indeno(1,2,3-cd)pyrene	0.42	0.037		mg/Kg-dry	1	7/1/2013
Naphthalene	ND	0.037		mg/Kg-dry	1	7/1/2013
Phenanthrene	0.5	0.037		mg/Kg-dry	1	7/1/2013
Pyrene	1.1	0.037		mg/Kg-dry	1	7/1/2013
BTEX by GC/MS	**SW5035/8260B**			Prep Date: **6/28/2013**		Analyst: **PS**
Benzene	ND	0.0045		mg/Kg-dry	1	7/2/2013
Ethylbenzene	ND	0.0045		mg/Kg-dry	1	7/2/2013
Toluene	ND	0.0045		mg/Kg-dry	1	7/2/2013
Xylenes, Total	ND	0.014		mg/Kg-dry	1	7/2/2013
Percent Moisture	**D2974**			Prep Date: **6/27/2013**		Analyst: **SDA**
Percent Moisture	10.2	0.2	*	wt%	1	6/27/2013

Qualifiers:

ND - Not Detected at the Reporting Limit
J - Analyte detected below quanititation limits
B - Analyte detected in the associated Method Blank
HT - Sample received past holding time
* - Non-accredited parameter
RL - Reporting / Quantitation Limit for the analysis
S - Spike Recovery outside accepted recovery limits
R - RPD outside accepted recovery limits
E - Value above quantitation range
H - Holding time exceeded

STAT Analysis Corporation
2242 West Harrison St., Suite 200, Chicago, IL 60612-3766
Tel: (312) 733-0551 Fax: (312) 733-2386 STATinfo@STATAnalysis.com
Accreditation Numbers: IEPA ELAP 100445; ORELAP IL300001; AIHA 101160; NVLAP LabCode 101202

Date Reported: July 05, 2013
Date Printed: July 05, 2013

Client: Terracon Consultants, Inc.
Lab Order: 13060930
Project: A2137008, 650 West 83rd Street, Chicago IL
Lab ID: 13060930-022

Client Sample ID: B36 (4-6)
Collection Date 6/26/2013 10:20:00 AM
Matrix: Soil

Analyses	Result	RL	Qualifier	Units	DF	Date Analyzed
Mercury	**SW7471A**			Prep Date: **7/3/2013**		Analyst: **LB**
Mercury	0.027	0.023		mg/Kg-dry	1	7/3/2013
Metals by ICP/MS	**SW6020 (SW3050B)**			Prep Date: **7/1/2013**		Analyst: **JG**
Arsenic	11	1.1		mg/Kg-dry	10	7/1/2013
Barium	74	1.1		mg/Kg-dry	10	7/1/2013
Cadmium	ND	0.55		mg/Kg-dry	10	7/1/2013
Chromium	19	1.1		mg/Kg-dry	10	7/1/2013
Lead	19	0.55		mg/Kg-dry	10	7/1/2013
Selenium	ND	1.1		mg/Kg-dry	10	7/1/2013
Silver	ND	1.1		mg/Kg-dry	10	7/1/2013
Semivolatile Organic Compounds by GC/MS	**SW8270C (SW3550B)**			Prep Date: **6/28/2013**		Analyst: **DM**
Acenaphthene	0.075	0.041		mg/Kg-dry	1	7/1/2013
Acenaphthylene	0.092	0.041		mg/Kg-dry	1	7/1/2013
Anthracene	0.22	0.041		mg/Kg-dry	1	7/1/2013
Benz(a)anthracene	0.6	0.041		mg/Kg-dry	1	7/1/2013
Benzo(a)pyrene	0.55	0.041		mg/Kg-dry	1	7/1/2013
Benzo(b)fluoranthene	0.59	0.041		mg/Kg-dry	1	7/1/2013
Benzo(g,h,i)perylene	0.27	0.041		mg/Kg-dry	1	7/1/2013
Benzo(k)fluoranthene	0.34	0.041		mg/Kg-dry	1	7/1/2013
Chrysene	0.67	0.041		mg/Kg-dry	1	7/1/2013
Dibenz(a,h)anthracene	0.15	0.041		mg/Kg-dry	1	7/1/2013
Fluoranthene	1.4	0.041		mg/Kg-dry	1	7/1/2013
Fluorene	0.14	0.041		mg/Kg-dry	1	7/1/2013
Indeno(1,2,3-cd)pyrene	0.23	0.041		mg/Kg-dry	1	7/1/2013
Naphthalene	0.047	0.041		mg/Kg-dry	1	7/1/2013
Phenanthrene	1.2	0.041		mg/Kg-dry	1	7/1/2013
Pyrene	1.3	0.041		mg/Kg-dry	1	7/1/2013
BTEX by GC/MS	**SW5035/8260B**			Prep Date: **6/28/2013**		Analyst: **ERP**
Benzene	ND	0.0067		mg/Kg-dry	1	7/2/2013
Ethylbenzene	ND	0.0067		mg/Kg-dry	1	7/2/2013
Toluene	ND	0.0067		mg/Kg-dry	1	7/2/2013
Xylenes, Total	ND	0.02		mg/Kg-dry	1	7/2/2013
Percent Moisture	**D2974**			Prep Date: **6/27/2013**		Analyst: **SDA**
Percent Moisture	19.0	0.2	*	wt%	1	6/27/2013

Qualifiers:

ND - Not Detected at the Reporting Limit
J - Analyte detected below quanititation limits
B - Analyte detected in the associated Method Blank
HT - Sample received past holding time
* - Non-accredited parameter
RL - Reporting / Quantitation Limit for the analysis
S - Spike Recovery outside accepted recovery limits
R - RPD outside accepted recovery limits
E - Value above quantitation range
H - Holding time exceeded

STAT Analysis Corporation
2242 West Harrison St., Suite 200, Chicago, IL 60612-3766
Tel: (312) 733-0551 Fax: (312) 733-2386 STATinfo@STATAnalysis.com
Accreditation Numbers: IEPA ELAP 100445; ORELAP IL300001; AIHA 101160; NVLAP LabCode 101202

Date Reported: July 05, 2013
Date Printed: July 05, 2013

Client: Terracon Consultants, Inc.
Lab Order: 13060930
Project: A2137008, 650 West 83rd Street, Chicago IL
Lab ID: 13060930-023

Client Sample ID: B19 (1-3)
Collection Date 6/26/2013 2:00:00 PM
Matrix: Soil

Analyses	Result	RL	Qualifier	Units	DF	Date Analyzed
Mercury	**SW7471A**			Prep Date: **7/3/2013**		Analyst: **LB**
Mercury	0.086	0.02		mg/Kg-dry	1	7/3/2013
Metals by ICP/MS	**SW6020 (SW3050B)**			Prep Date: **7/1/2013**		Analyst: **JG**
Arsenic	7.3	1.1		mg/Kg-dry	10	7/1/2013
Barium	130	1.1		mg/Kg-dry	10	7/1/2013
Cadmium	0.7	0.57		mg/Kg-dry	10	7/1/2013
Chromium	12	1.1		mg/Kg-dry	10	7/1/2013
Lead	150	0.57		mg/Kg-dry	10	7/1/2013
Selenium	ND	1.1		mg/Kg-dry	10	7/1/2013
Silver	ND	1.1		mg/Kg-dry	10	7/1/2013
Semivolatile Organic Compounds by GC/MS	**SW8270C (SW3550B)**			Prep Date: **6/28/2013**		Analyst: **DM**
Acenaphthene	0.22	0.036		mg/Kg-dry	1	7/1/2013
Acenaphthylene	0.16	0.036		mg/Kg-dry	1	7/1/2013
Anthracene	0.63	0.036		mg/Kg-dry	1	7/1/2013
Benz(a)anthracene	1.8	0.036		mg/Kg-dry	1	7/1/2013
Benzo(a)pyrene	1.9	0.036		mg/Kg-dry	1	7/1/2013
Benzo(b)fluoranthene	1.7	0.036		mg/Kg-dry	1	7/1/2013
Benzo(g,h,i)perylene	0.9	0.036		mg/Kg-dry	1	7/1/2013
Benzo(k)fluoranthene	1.5	0.036		mg/Kg-dry	1	7/1/2013
Chrysene	1.9	0.036		mg/Kg-dry	1	7/1/2013
Dibenz(a,h)anthracene	0.5	0.036		mg/Kg-dry	1	7/1/2013
Fluoranthene	3.7	0.036		mg/Kg-dry	1	7/1/2013
Fluorene	0.15	0.036		mg/Kg-dry	1	7/1/2013
Indeno(1,2,3-cd)pyrene	0.83	0.036		mg/Kg-dry	1	7/1/2013
Naphthalene	0.09	0.036		mg/Kg-dry	1	7/1/2013
Phenanthrene	1.6	0.036		mg/Kg-dry	1	7/1/2013
Pyrene	3.3	0.036		mg/Kg-dry	1	7/1/2013
BTEX by GC/MS	**SW5035/8260B**			Prep Date: **6/28/2013**		Analyst: **PS**
Benzene	ND	0.005		mg/Kg-dry	1	7/2/2013
Ethylbenzene	ND	0.005		mg/Kg-dry	1	7/2/2013
Toluene	ND	0.005		mg/Kg-dry	1	7/2/2013
Xylenes, Total	ND	0.015		mg/Kg-dry	1	7/2/2013
Percent Moisture	**D2974**			Prep Date: **6/27/2013**		Analyst: **SDA**
Percent Moisture	9.8	0.2	*	wt%	1	6/27/2013

Qualifiers:
ND - Not Detected at the Reporting Limit
J - Analyte detected below quanititation limits
B - Analyte detected in the associated Method Blank
HT - Sample received past holding time
* - Non-accredited parameter
RL - Reporting / Quantitation Limit for the analysis
S - Spike Recovery outside accepted recovery limits
R - RPD outside accepted recovery limits
E - Value above quantitation range
H - Holding time exceeded

STAT Analysis Corporation
2242 West Harrison St., Suite 200, Chicago, IL 60612-3766
Tel: (312) 733-0551 Fax: (312) 733-2386 STATinfo@STATAnalysis.com
Accreditation Numbers: IEPA ELAP 100445; ORELAP IL300001; AIHA 101160; NVLAP LabCode 101202

Date Reported: July 05, 2013
Date Printed: July 05, 2013

Client: Terracon Consultants, Inc.
Lab Order: 13060930
Project: A2137008, 650 West 83rd Street, Chicago IL
Lab ID: 13060930-024

Client Sample ID: B19 (4-6)
Collection Date 6/26/2013 2:20:00 PM
Matrix: Soil

Analyses	Result	RL	Qualifier	Units	DF	Date Analyzed
Mercury	**SW7471A**			Prep Date: **7/3/2013**		Analyst: **LB**
Mercury	ND	0.025		mg/Kg-dry	1	7/3/2013
Metals by ICP/MS	**SW6020 (SW3050B)**			Prep Date: **7/1/2013**		Analyst: **JG**
Arsenic	1.9	1.4		mg/Kg-dry	10	7/1/2013
Barium	42	1.4		mg/Kg-dry	10	7/1/2013
Cadmium	ND	0.7		mg/Kg-dry	10	7/1/2013
Chromium	9.6	1.4		mg/Kg-dry	10	7/1/2013
Lead	11	0.7		mg/Kg-dry	10	7/1/2013
Selenium	ND	1.4		mg/Kg-dry	10	7/1/2013
Silver	ND	1.4		mg/Kg-dry	10	7/1/2013
Semivolatile Organic Compounds by GC/MS	**SW8270C (SW3550B)**			Prep Date: **6/28/2013**		Analyst: **DM**
Acenaphthene	ND	0.047		mg/Kg-dry	1	7/1/2013
Acenaphthylene	ND	0.047		mg/Kg-dry	1	7/1/2013
Anthracene	ND	0.047		mg/Kg-dry	1	7/1/2013
Benz(a)anthracene	0.049	0.047		mg/Kg-dry	1	7/1/2013
Benzo(a)pyrene	0.054	0.047		mg/Kg-dry	1	7/1/2013
Benzo(b)fluoranthene	ND	0.047		mg/Kg-dry	1	7/1/2013
Benzo(g,h,i)perylene	ND	0.047		mg/Kg-dry	1	7/1/2013
Benzo(k)fluoranthene	ND	0.047		mg/Kg-dry	1	7/1/2013
Chrysene	0.064	0.047		mg/Kg-dry	1	7/1/2013
Dibenz(a,h)anthracene	ND	0.047		mg/Kg-dry	1	7/1/2013
Fluoranthene	0.11	0.047		mg/Kg-dry	1	7/1/2013
Fluorene	ND	0.047		mg/Kg-dry	1	7/1/2013
Indeno(1,2,3-cd)pyrene	ND	0.047		mg/Kg-dry	1	7/1/2013
Naphthalene	ND	0.047		mg/Kg-dry	1	7/1/2013
Phenanthrene	0.094	0.047		mg/Kg-dry	1	7/1/2013
Pyrene	0.11	0.047		mg/Kg-dry	1	7/1/2013
BTEX by GC/MS	**SW5035/8260B**			Prep Date: **6/28/2013**		Analyst: **PS**
Benzene	ND	0.0058		mg/Kg-dry	1	7/2/2013
Ethylbenzene	ND	0.0058		mg/Kg-dry	1	7/2/2013
Toluene	ND	0.0058		mg/Kg-dry	1	7/2/2013
Xylenes, Total	ND	0.017		mg/Kg-dry	1	7/2/2013
Percent Moisture	**D2974**			Prep Date: **6/27/2013**		Analyst: **SDA**
Percent Moisture	30.7	0.2	*	wt%	1	6/27/2013

Qualifiers:
ND - Not Detected at the Reporting Limit
J - Analyte detected below quanititation limits
B - Analyte detected in the associated Method Blank
HT - Sample received past holding time
* - Non-accredited parameter
RL - Reporting / Quantitation Limit for the analysis
S - Spike Recovery outside accepted recovery limits
R - RPD outside accepted recovery limits
E - Value above quantitation range
H - Holding time exceeded

STAT Analysis Corporation
2242 W. Harrison, Suite 200, Chicago, Illinois 60612 Phone: (312) 733-0551 Fax: (312) 733-2386
e-mail address: STATinfo@STATAnalysis.com AIHA, NVLAP and NELAP accredited

CHAIN OF CUSTODY RECORD

Nº: 850442 Page: 1 of 2

Company: Terracon
Project Number: A2137008 Client Tracking No.:
Project Name: 650 west 83rd Street
Project Location: Chicago IL
Sampler(s): J. Sullivan
Report To: Richard O'Brien Phone: 312-575-0014
Fax: 312-443-2958
QC Level: 1 2 3 4 e-mail: rmobrien@terracon.com

P.O. No.:
Quote No.:

Turn Around: Standard
Results Needed: / / am/pm

Client Sample Number/Description:	Date Taken	Time Taken	Matrix	Comp.	Grab	Preserv.	No. of Containers	VOC	SVOC	Pesticides	PCB	TAL (Aqueous)	Herbicides	Barium	PNA	RCRA Metals	Remarks	Lab No.:
B8 (1-3)	6-26-13	1600	S		X		4							X	X	X		001
B8 (4-6)		1620	S		X		4	X	X	X	X	X	X					002
B9 (1-3)		1530	S		X		4							X	X	X		003
B9 (4-6)		1545	S		X		4							X	X	X		004
B17 (1-3)		1510	S		X		4							X	X	X		005
B17 (4-6)		1520	S		X		4							X	X	X		006
B26 (1-3)		1430	S		X		4							X	X	X		007
B26 (6-8)		1455	S		X		4							X	X	X		008
B15 (1-3)		1320	S		X		4							X	X	X		009
B15 (4-6)		1335	S		X		4							X	X	X		010
B25 (1-3)		1240	S		X		4							X	X	X		011
B25 (4-6)		1300	S		X		4							X	X	X		012
B33 (1-3)		1200	S		X		4							X	X	X		013
B33 (4-6)		1230	S		X		4							X	X	X		014
B32 (1-3)		1130	S		X		4							X	X	X		015
B32 (6-8)		1150	S		X		4							X	X	X		016
B35 (1-3)		1030	S		X		4							X	X	X		017
B35 (4-5)		1040	S		X		4							X	X	X		018
B27 (1-3)		930	S		X		4							X	X	X		019
B27 (6-8)		940	S		X		4							X	X	X		020

Relinquished by: (Signature) Date/Time: 6/26/13 1700
Received by: (Signature) Date/Time: 6/26/13 1700
Relinquished by: (Signature) Date/Time:
Received by: (Signature) Date/Time:
Relinquished by: (Signature) Date/Time:
Received by: (Signature) Date/Time:

Comments: e-mail copy of coc to Richard O'Brien

Preservation Code: A = None B = HNO_3 C = NaOH
D = H_2SO_4 E = HCl F = 5035/EnCore G = Other

Laboratory Work Order No.: 1306930
Received on Ice: Yes [X] No [ ]
Temperature: 7.2 °C

STAT Analysis Corporation
2242 W. Harrison, Suite 200, Chicago, Illinois 60612 Phone: (312) 733-0551 Fax: (312) 733-2386
e-mail address: STATinfo@STATAnalysis.com AIHA, NVLAP and NELAP accredited

CHAIN OF CUSTODY RECORD

Nº: 850440 Page: 2 of 2

Company: TERRACON
Project Number: A2137008 Client Tracking No.:
Project Name: 650 West 83
Project Location: Chicago IL
Sampler(s): J. Sullivan
Report To: Richard O'Brien Phone: 312-575-0014
Fax: 312-443-2958
e-mail: cmobrien@terracon.com
QC Level: 1 2 3 4

P.O. No.:
Quote No.:

Turn Around: STANDARD
Results Needed: / / am/pm

Client Sample Number/Description:	Date Taken	Time Taken	Matrix	Comp.	Grab	Preserv.	No. of Containers	Detect PVA RCRA metals	Remarks	Lab No.
B36 (1-3)	6-26-13	1000	S		X		4	X X X		022
B36 (4-6)	↓	1020	S		X		4	X X X		023
B19 (1-3)		1400	S		X		4	X X X		024
B19 (4-6)	↓	1420	S		X		4	X X X		

Relinquished by: (Signature) Date/Time: 6/26/13 1700
Received by: (Signature) Date/Time: 6/26/13 1700
Relinquished by: (Signature) Date/Time:
Received by: (Signature) Date/Time:
Relinquished by: (Signature) Date/Time:
Received by: (Signature) Date/Time:

Comments: email copy of COC to Richard O'Brien

Laboratory Work Order No.: 1306093

Received on Ice: Yes X No

Temperature: 7.2 °C

Preservation Code: A = None B = HNO_3 C = NaOH
D = H_2SO_4 E = HCl F = 5035/EnCore G = Other

STAT Analysis Corporation

Sample Receipt Checklist

Client Name TERRACON | Date and Time Received: 6/26/2013 5:00:00 PM

Work Order Number 13060930 | Received by: TJW

Checklist completed by: _____ 6/26/13 (Signature / Date) | Reviewed by: _____ 6/28/13 (Initials / Date)

Matrix: | Carrier name | Client Delivered

Shipping container/cooler in good condition?	Yes ☑	No ☐	Not Present ☐
Custody seals intact on shippping container/cooler?	Yes ☐	No ☐	Not Present ☑
Custody seals intact on sample bottles?	Yes ☐	No ☐	Not Present ☑
Chain of custody present?	Yes ☑	No ☐	
Chain of custody signed when relinquished and received?	Yes ☑	No ☐	
Chain of custody agrees with sample labels/containers?	Yes ☑	No ☐	
Samples in proper container/bottle?	Yes ☑	No ☐	
Sample containers intact?	Yes ☑	No ☐	
Sufficient sample volume for indicated test?	Yes ☑	No ☐	
All samples received within holding time?	Yes ☑	No ☐	
Container or Temp Blank temperature in compliance?	Yes ☑	No ☐	Temperature 7.2 °C
Water - VOA vials have zero headspace?	No VOA vials submitted ☐	Yes ☐	No ☐
Water - Samples pH checked?	Yes ☐	No ☐	Checked by:
Water - Samples properly preserved?	Yes ☐	No ☐	pH Adjusted?

Any No response must be detailed in the comments section below.

Comments:

Client / Person contacted: _____ Date contacted: _____ Contacted by: _____

Response:

Craig Chawla

From: O'Brien, Richard M [rmobrien@terracon.com]
Sent: Monday, July 01, 2013 9:19 AM
To: Craig Chawla
Subject: 650 W. 83rd Street

Hi Craig,

I have a few changes regarding the samples submitted last Tuesday (6/25) – Friday (6/28) for 650 W. 83rd Street by Jason Juliano for us. Please run the following on standard turnaround:

B18(1-3) – Change from BTEX to VOCs
B33(4-6) – Change from BTEX to VOCs
B15(subsurface) – Change from BTEX to VOCs, add pH

B16(1-3) – Change to IEPA Target Compound List
B16(subsurface) – Change to IEPA Target Compound List

B-8(1-3) – Add pH
B29(1-3) – Add pH
B29(subsurface) – Add pH
B12(1-3) – Add pH
B12(subsurface) – Add pH
B31(1-3) – Add pH
B31(subsurface) – Add pH

Note I do not have the "subsurface" intervals listed in samples listed at the moment. They are most likely (4-6) or (6-8). Let me know if you have any questions.

Thanks,

Richard O'Brien, P.E.
Senior Project Engineer
Environmental Services

Terracon Consultants, Inc.
650 West Lake Street, Suite 420 I Chicago, IL 60661
P [312] 575-0014 I F [312] 575-0111 I C [312] 443-2958
rmobrien@terracon.com I terracon.com

Terracon provides geotechnical, environmental, construction materials, and facilities consulting engineering services delivered with responsiveness, resourcefulness, and reliability.

Private and confidential as detailed here (www.terracon.com/disclaimer). If you cannot access hyperlink, please e-mail sender.

MEM

STAT Analysis Corporation
2242 West Harrison St., Suite 200, Chicago, IL 60612-3766
Tel: (312) 733-0551 Fax: (312) 733-2386 STATinfo@STATAnalysis.com
Accreditation Numbers: IEPA ELAP 100445; ORELAP IL300001;AIHA 101160; NVLAP LabCode 101202-

October 03, 2013

Terracon Consultants, Inc.
650 W. Lake Street
Suite 420
Chicago, IL 60661
Telephone: (312) 575-0014
Fax: (312) 575-0111

RE: A2137008, 650 W. 83rd St., Phase II, Chicago, IL STAT Project No: 13090865

Dear Richard O'Brien:

STAT Analysis received 26 samples for the referenced project on 9/26/2013 5:00:00 PM. The analytical results are presented in the following report.

All analyses were performed in accordance with the requirements of 35 IAC Part 186 / NELAC standards. Analyses were performed in accordance with methods as referenced on the analytical report. Those analytical results expressed on a dry weight basis are also noted on the analytical report.

All analyses were performed within established holding time criteria, and all Quality Control criteria met EPA or laboratory specifications except when noted in the Case Narrative or Analytical Report. If required, an estimate of uncertainty for the analyses can be provided. A listing of accredited methods/parameters can also be provided.

Thank you for the opportunity to serve you and I look forward to working with you in the future. If you have any questions regarding the enclosed materials, please contact me at (312) 733-0551.

Sincerely,

Catia Giannini
Project Manager

The information contained in this report and any attachments is confidential information intended only for the use of the individual or entities named above. The results of this report relate only to the samples tested. If you have received this report in error, please notify us immediately by phone. This report shall not be reproduced, except in its entirety, unless written approval has been obtained from the laboratory. This analytical report shall become property of the Customer upon payment in full. Otherwise, STAT will be under no obligation to support, defend or discuss the analytical report.

STAT Analysis Corporation

Date: October 03, 2013

Client: Terracon Consultants, Inc.
Project: A2137008, 650 W. 83rd St., Phase II, Chicago, IL
Lab Order: 13090865

Work Order Sample Summary

Lab Sample ID	Client Sample ID	Tag Number	Collection Date	Date Received
13090865-001A	B-8b (1-3)		9/26/2013 12:52:00 PM	9/26/2013
13090865-002A	B-8b (4-6)		9/26/2013 12:55:00 PM	9/26/2013
13090865-003A	B-14VD (8-10)		9/26/2013 11:45:00 AM	9/26/2013
13090865-003B	B-14VD (8-10)		9/26/2013 11:45:00 AM	9/26/2013
13090865-004A	B-14VD (10-12)		9/26/2013 11:48:00 AM	9/26/2013
13090865-004B	B-14VD (10-12)		9/26/2013 11:48:00 AM	9/26/2013
13090865-005A	B-14VD (12-14)		9/26/2013 11:50:00 AM	9/26/2013
13090865-005B	B-14VD (12-14)		9/26/2013 11:50:00 AM	9/26/2013
13090865-006A	B-16VD (8-10)		9/26/2013 9:58:00 AM	9/26/2013
13090865-007A	B-16VD (10-12)		9/26/2013 10:00:00 AM	9/26/2013
13090865-008A	B-16VD (12-14)		9/26/2013 10:02:00 AM	9/26/2013
13090865-009A	B-35b (1-3)		9/26/2013 1:30:00 PM	9/26/2013
13090865-010A	B-35b (4-6)		9/26/2013 1:33:00 PM	9/26/2013
13090865-011A	B-108 (6-8)		9/26/2013 2:30:00 PM	9/26/2013
13090865-012A	B-109 (6-8)		9/26/2013 2:37:00 PM	9/26/2013
13090865-013A	B-110 (6-8)		9/26/2013 2:47:00 PM	9/26/2013
13090865-014A	B-111 (6-8)		9/26/2013 2:55:00 PM	9/26/2013
13090865-015A	B-112 (6-8)		9/26/2013 2:18:00 PM	9/26/2013
13090865-016A	B-113 (6-8)		9/26/2013 2:22:00 PM	9/26/2013
13090865-017A	B-114 (6-8)		9/26/2013 2:02:00 PM	9/26/2013
13090865-018A	B-115 (6-8)		9/26/2013 10:30:00 AM	9/26/2013
13090865-019A	B-122 (1-3)		9/26/2013 8:30:00 AM	9/26/2013
13090865-020A	B-122 (4-6)		9/26/2013 8:35:00 AM	9/26/2013
13090865-021A	B-123 (1-3)		9/26/2013 9:05:00 AM	9/26/2013
13090865-022A	B-123 (4-6)		9/26/2013 9:07:00 AM	9/26/2013
13090865-023A	SG-16 Can #177		9/26/2013 11:36:00 AM	9/26/2013
13090865-024A	SG-14 Can #007		9/26/2013 1:00:00 PM	9/26/2013
13090865-025A	SG-8b Can #002		9/26/2013 1:45:00 PM	9/26/2013
13090865-026A	SG-35b Can #015		9/26/2013 2:10:00 PM	9/26/2013

STAT Analysis Corporation
2242 West Harrison St., Suite 200, Chicago, IL 60612-3766
Tel: (312) 733-0551 Fax: (312) 733-2386 STATinfo@STATAnalysis.com
Accreditation Numbers: IEPA ELAP 100445; ORELAP IL300001; AIHA 101160; NVLAP LabCode 101202-

Date Reported: October 03, 2013
Date Printed: October 03, 2013

Client:	Terracon Consultants, Inc.	**Client Sample ID:**	B-8b (1-3)
Lab Order:	13090865	**Collection Date:**	9/26/2013 12:52:00 PM
Project:	A2137008, 650 W. 83rd St., Phase II, Chicago, IL	**Matrix:**	Soil
Lab ID:	13090865-001		

Analyses	Result	RL	Qualifier	Units	DF	Date Analyzed
Total Petroleum Hydrocarbons	**SW8015M (SW3580A)**			Prep Date: **10/1/2013**		Analyst: **MDM**
TPH (GRO)	ND	23		mg/Kg-dry	1	10/1/2013
TPH (DRO)	ND	23		mg/Kg-dry	1	10/1/2013
Percent Moisture	**D2974**			Prep Date: **9/27/2013**		Analyst: **VA**
Percent Moisture	17.6	0.2	*	wt%	1	9/28/2013

Qualifiers:

ND - Not Detected at the Reporting Limit
J - Analyte detected below quantitation limits
B - Analyte detected in the associated Method Blank
HT - Sample received past holding time
* - Non-accredited parameter
RL - Reporting / Quantitation Limit for the analysis
S - Spike Recovery outside accepted recovery limits
R - RPD outside accepted recovery limits
E - Value above quantitation range
H - Holding time exceeded

STAT Analysis Corporation
2242 West Harrison St., Suite 200, Chicago, IL 60612-3766
Tel: (312) 733-0551 Fax: (312) 733-2386 STATinfo@STATAnalysis.com
Accreditation Numbers: IEPA ELAP 100445; ORELAP IL300001; AIHA 101160; NVLAP LabCode 101202-

Date Reported: October 03, 2013
Date Printed: October 03, 2013

Client: Terracon Consultants, Inc.
Lab Order: 13090865
Project: A2137008,-650 W. 83rd St., Phase II, Chicago, IL
Lab ID: 13090865-002

Client Sample ID: B-8b (4-6)
Collection Date: 9/26/2013 12:55:00 PM
Matrix: Soil

Analyses	Result	RL	Qualifier	Units	DF	Date Analyzed
Total Petroleum Hydrocarbons	**SW8015M (SW3580A)**			Prep Date: **10/1/2013**		Analyst: **MDM**
TPH (GRO)	ND	22		mg/Kg-dry	1	10/1/2013
TPH (DRO)	ND	22		mg/Kg-dry	1	10/1/2013
Percent Moisture	**D2974**			Prep Date: **9/27/2013**		Analyst: **VA**
Percent Moisture	15.8	0.2	*	wt%	1	9/28/2013

Qualifiers:
ND - Not Detected at the Reporting Limit
J - Analyte detected below quantitation limits
B - Analyte detected in the associated Method Blank
HT - Sample received past holding time
* - Non-accredited parameter
RL - Reporting / Quantitation Limit for the analysis
S - Spike Recovery outside accepted recovery limits
R - RPD outside accepted recovery limits
E - Value above quantitation range
H - Holding time exceeded

STAT Analysis Corporation
2242 West Harrison St., Suite 200, Chicago, IL 60612-3766
Tel: (312) 733-0551 Fax: (312) 733-2386 STATinfo@STATAnalysis.com
Accreditation Numbers: IEPA ELAP 100445; ORELAP IL300001; AIHA 101160; NVLAP LabCode 101202-

Date Reported: October 03, 2013
Date Printed: October 03, 2013

Client: Terracon Consultants, Inc.
Lab Order: 13090865
Project: A2137008, 650 W. 83rd St., Phase II, Chicago, IL
Lab ID: 13090865-003

Client Sample ID: B-14VD (8-10)
Collection Date: 9/26/2013 11:45:00 AM
Matrix: Soil

Analyses	Result	RL	Qualifier	Units	DF	Date Analyzed
Total Petroleum Hydrocarbons		**SW8015M (SW3580A)**		Prep Date: **10/1/2013**		Analyst: **MDM**
TPH (GRO)	ND	41		mg/Kg-dry	1	10/1/2013
TPH (DRO)	ND	41		mg/Kg-dry	1	10/1/2013
Polynuclear Aromatic Hydrocarbons by GC/MS		**SW8270C (SW3550B)**		Prep Date: **9/27/2013**		Analyst: **DM**
Acenaphthene	0.22	0.068		mg/Kg-dry	1	9/30/2013
Acenaphthylene	0.088	0.068		mg/Kg-dry	1	9/30/2013
Anthracene	0.55	0.068		mg/Kg-dry	1	9/30/2013
Benz(a)anthracene	0.83	0.068		mg/Kg-dry	1	9/30/2013
Benzo(a)pyrene	0.79	0.068		mg/Kg-dry	1	9/30/2013
Benzo(b)fluoranthene	0.63	0.068		mg/Kg-dry	1	9/30/2013
Benzo(g,h,i)perylene	0.5	0.068		mg/Kg-dry	1	9/30/2013
Benzo(k)fluoranthene	0.62	0.068		mg/Kg-dry	1	9/30/2013
Chrysene	0.85	0.068		mg/Kg-dry	1	9/30/2013
Dibenz(a,h)anthracene	0.26	0.068		mg/Kg-dry	1	9/30/2013
Fluoranthene	1.8	0.068		mg/Kg-dry	1	9/30/2013
Fluorene	0.35	0.068		mg/Kg-dry	1	9/30/2013
Indeno(1,2,3-cd)pyrene	0.45	0.068		mg/Kg-dry	1	9/30/2013
Naphthalene	0.51	0.068		mg/Kg-dry	1	9/30/2013
Phenanthrene	2.1	0.068		mg/Kg-dry	1	9/30/2013
Pyrene	1.6	0.068		mg/Kg-dry	1	9/30/2013
BTEX by GC/MS		**SW5035/8260B**		Prep Date: **9/26/2013**		Analyst: **PS**
Benzene	ND	0.0081		mg/Kg-dry	1	9/30/2013
Ethylbenzene	ND	0.0081		mg/Kg-dry	1	9/30/2013
Toluene	ND	0.0081		mg/Kg-dry	1	9/30/2013
Xylenes, Total	ND	0.024		mg/Kg-dry	1	9/30/2013
Percent Moisture		**D2974**		Prep Date: **9/28/2013**		Analyst: **VA**
Percent Moisture	51.8	0.2	*	wt%	1	9/28/2013

Qualifiers:
ND - Not Detected at the Reporting Limit
J - Analyte detected below quantitation limits
B - Analyte detected in the associated Method Blank
HT - Sample received past holding time
* - Non-accredited parameter
RL - Reporting / Quantitation Limit for the analysis
S - Spike Recovery outside accepted recovery limits
R - RPD outside accepted recovery limits
E - Value above quantitation range
H - Holding time exceeded

STAT Analysis Corporation
2242 West Harrison St., Suite 200, Chicago, IL 60612-3766
Tel: (312) 733-0551 Fax: (312) 733-2386 STATinfo@STATAnalysis.com
Accreditation Numbers: IEPA ELAP 100445; ORELAP IL300001; AIHA 101160; NVLAP LabCode 101202-

Date Reported: October 03, 2013
Date Printed: October 03, 2013

Client:	Terracon Consultants, Inc.	**Client Sample ID:**	B-16VD (8-10)
Lab Order:	13090865	**Collection Date:**	9/26/2013 9:58:00 AM
Project:	A2137008, 650 W. 83rd St., Phase II, Chicago, IL	**Matrix:**	Soil
Lab ID:	13090865-006		

Analyses	Result	RL	Qualifier	Units	DF	Date Analyzed
TCLP Metals by ICP/MS	**SW1311/6020 (SW3005A)**		Prep Date: **10/1/2013**		Analyst: **JG**	
Lead	ND	0.0083		mg/L	5	10/2/2013

Qualifiers:

ND - Not Detected at the Reporting Limit
J - Analyte detected below quantitation limits
B - Analyte detected in the associated Method Blank
HT - Sample received past holding time
* - Non-accredited parameter
RL - Reporting / Quantitation Limit for the analysis
S - Spike Recovery outside accepted recovery limits
R - RPD outside accepted recovery limits
E - Value above quantitation range
H - Holding time exceeded

STAT Analysis Corporation
2242 West Harrison St., Suite 200, Chicago, IL 60612-3766
Tel: (312) 733-0551 Fax: (312) 733-2386 STATinfo@STATAnalysis.com
Accreditation Numbers: IEPA ELAP 100445; ORELAP IL300001; AIHA 101160; NVLAP LabCode 101202-

Date Reported: October 03, 2013
Date Printed: October 03, 2013

Client:	Terracon Consultants, Inc.	**Client Sample ID:**	B-35b (1-3)
Lab Order:	13090865	**Collection Date:**	9/26/2013 1:30:00 PM
Project:	A2137008, 650 W. 83rd St., Phase II, Chicago, IL	**Matrix:**	Soil
Lab ID:	13090865-009		

Analyses	Result	RL	Qualifier	Units	DF	Date Analyzed
Total Petroleum Hydrocarbons	**SW8015M (SW3580A)**			Prep Date: **10/1/2013**		Analyst: **MDM**
TPH (GRO)	ND	24		mg/Kg-dry	1	10/1/2013
TPH (DRO)	38	24		mg/Kg-dry	1	10/1/2013
Percent Moisture	**D2974**			Prep Date: **9/27/2013**		Analyst: **VA**
Percent Moisture	18.2	0.2	*	wt%	1	9/28/2013

Qualifiers:

- ND - Not Detected at the Reporting Limit
- J - Analyte detected below quantitation limits
- B - Analyte detected in the associated Method Blank
- HT - Sample received past holding time
- * - Non-accredited parameter
- RL - Reporting / Quantitation Limit for the analysis
- S - Spike Recovery outside accepted recovery limits
- R - RPD outside accepted recovery limits
- E - Value above quantitation range
- H - Holding time exceeded

STAT Analysis Corporation
2242 West Harrison St., Suite 200, Chicago, IL 60612-3766
Tel: (312) 733-0551 Fax: (312) 733-2386 STATinfo@STATAnalysis.com
Accreditation Numbers: IEPA ELAP 100445; ORELAP IL300001; AIHA 101160; NVLAP LabCode 101202-

Date Reported: October 03, 2013
Date Printed: October 03, 2013

Client: Terracon Consultants, Inc.
Lab Order: 13090865
Project: A2137008, 650 W. 83rd St., Phase II, Chicago, IL
Lab ID: 13090865-010

Client Sample ID: B-35b (4-6)
Collection Date: 9/26/2013 1:33:00 PM
Matrix: Soil

Analyses	Result	RL	Qualifier	Units	DF	Date Analyzed
Total Petroleum Hydrocarbons	**SW8015M (SW3580A)**			Prep Date: **10/1/2013**		Analyst: **MDM**
TPH (GRO)	ND	23		mg/Kg-dry	1	10/1/2013
TPH (DRO)	ND	23		mg/Kg-dry	1	10/1/2013
Percent Moisture	**D2974**			Prep Date: **9/27/2013**		Analyst: **VA**
Percent Moisture	16.0	0.2	*	wt%	1	9/28/2013

Qualifiers:
ND - Not Detected at the Reporting Limit
J - Analyte detected below quantitation limits
B - Analyte detected in the associated Method Blank
HT - Sample received past holding time
* - Non-accredited parameter
RL - Reporting / Quantitation Limit for the analysis
S - Spike Recovery outside accepted recovery limits
R - RPD outside accepted recovery limits
E - Value above quantitation range
H - Holding time exceeded

STAT Analysis Corporation
2242 West Harrison St., Suite 200, Chicago, IL 60612-3766
Tel: (312) 733-0551 Fax: (312) 733-2386 STATinfo@STATAnalysis.com
Accreditation Numbers: IEPA ELAP 100445; ORELAP IL300001; AIHA 101160; NVLAP LabCode 101202-

Date Reported: October 03, 2013
Date Printed: October 03, 2013

Client:	Terracon Consultants, Inc.	**Client Sample ID:**	B-108 (6-8)
Lab Order:	13090865	**Collection Date:**	9/26/2013 2:30:00 PM
Project:	A2137008, 650 W. 83rd St., Phase II, Chicago, IL	**Matrix:**	Soil
Lab ID:	13090865-011		

Analyses	Result	RL	Qualifier	Units	DF	Date Analyzed
TCLP Metals by ICP/MS		**SW1311/6020 (SW3005A)**		Prep Date: **10/1/2013**		Analyst: **JG**
Lead	0.18	0.005		mg/L	5	10/2/2013

Qualifiers:

ND - Not Detected at the Reporting Limit
J - Analyte detected below quantitation limits
B - Analyte detected in the associated Method Blank
HT - Sample received past holding time
* - Non-accredited parameter
RL - Reporting / Quantitation Limit for the analysis
S - Spike Recovery outside accepted recovery limits
R - RPD outside accepted recovery limits
E - Value above quantitation range
H - Holding time exceeded

STAT Analysis Corporation
2242 West Harrison St., Suite 200, Chicago, IL 60612-3766
Tel: (312) 733-0551 Fax: (312) 733-2386 STATinfo@STATAnalysis.com
Accreditation Numbers: IEPA ELAP 100445; ORELAP IL300001; AIHA 101160; NVLAP LabCode 101202-

Date Reported: October 03, 2013
Date Printed: October 03, 2013

Client:	Terracon Consultants, Inc.	**Client Sample ID:**	B-110 (6-8)
Lab Order:	13090865	**Collection Date:**	9/26/2013 2:47:00 PM
Project:	A2137008, 650 W. 83rd St., Phase II, Chicago, IL	**Matrix:**	Soil
Lab ID:	13090865-013		

Analyses	Result	RL	Qualifier	Units	DF	Date Analyzed
TCLP Metals by ICP/MS		**SW1311/6020 (SW3005A)**		Prep Date: **10/1/2013**		Analyst: **JG**
Lead	0.018	0.005		mg/L	5	10/2/2013

Qualifiers:

ND - Not Detected at the Reporting Limit
J - Analyte detected below quantitation limits
B - Analyte detected in the associated Method Blank
HT - Sample received past holding time
* - Non-accredited parameter
RL - Reporting / Quantitation Limit for the analysis
S - Spike Recovery outside accepted recovery limits
R - RPD outside accepted recovery limits
E - Value above quantitation range
H - Holding time exceeded

STAT Analysis Corporation
2242 West Harrison St., Suite 200, Chicago, IL 60612-3766
Tel: (312) 733-0551 Fax: (312) 733-2386 STATinfo@STATAnalysis.com
Accreditation Numbers: IEPA ELAP 100445; ORELAP IL300001; AIHA 101160; NVLAP LabCode 101202-

Date Reported: October 03, 2013
Date Printed: October 03, 2013

Client:	Terracon Consultants, Inc.	**Client Sample ID:**	B-112 (6-8)
Lab Order:	13090865	**Collection Date:**	9/26/2013 2:18:00 PM
Project:	A2137008, 650 W. 83rd St., Phase II, Chicago, IL	**Matrix:**	Soil
Lab ID:	13090865-015		

Analyses	Result	RL	Qualifier	Units	DF	Date Analyzed
TCLP Metals by ICP/MS	**SW1311/6020 (SW3005A)**			Prep Date: **10/1/2013**		Analyst: **JG**
Lead	ND	0.005		mg/L	5	10/2/2013

Qualifiers:

- ND - Not Detected at the Reporting Limit
- J - Analyte detected below quantitation limits
- B - Analyte detected in the associated Method Blank
- HT - Sample received past holding time
- * - Non-accredited parameter
- RL - Reporting / Quantitation Limit for the analysis
- S - Spike Recovery outside accepted recovery limits
- R - RPD outside accepted recovery limits
- E - Value above quantitation range
- H - Holding time exceeded

STAT Analysis Corporation
2242 West Harrison St., Suite 200, Chicago, IL 60612-3766
Tel: (312) 733-0551 Fax: (312) 733-2386 STATinfo@STATAnalysis.com
Accreditation Numbers: IEPA ELAP 100445; ORELAP IL300001; AIHA 101160; NVLAP LabCode 101202-

Date Reported: October 03, 2013
Date Printed: October 03, 2013

Client:	Terracon Consultants, Inc.	**Client Sample ID:**	B-114 (6-8)
Lab Order:	13090865	**Collection Date:**	9/26/2013 2:02:00 PM
Project:	A2137008, 650 W. 83rd St., Phase II, Chicago, IL	**Matrix:**	Soil
Lab ID:	13090865-017		

Analyses	Result	RL	Qualifier	Units	DF	Date Analyzed
TCLP Metals by ICP/MS		**SW1311/6020 (SW3005A)**		Prep Date: **10/1/2013**		Analyst: **JG**
Lead	0.0064	0.005		mg/L	5	10/2/2013

Qualifiers:

ND - Not Detected at the Reporting Limit
J - Analyte detected below quantitation limits
B - Analyte detected in the associated Method Blank
HT - Sample received past holding time
* - Non-accredited parameter
RL - Reporting / Quantitation Limit for the analysis
S - Spike Recovery outside accepted recovery limits
R - RPD outside accepted recovery limits
E - Value above quantitation range
H - Holding time exceeded

STAT Analysis Corporation
2242 West Harrison St., Suite 200, Chicago, IL 60612-3766
Tel: (312) 733-0551 Fax: (312) 733-2386 STATinfo@STATAnalysis.com
Accreditation Numbers: IEPA ELAP 100445; ORELAP IL300001; AIHA 101160; NVLAP LabCode 101202-

Date Reported: October 03, 2013
Date Printed: October 03, 2013

Client: Terracon Consultants, Inc.
Lab Order: 13090865
Project: A2137008, 650 W. 83rd St., Phase II, Chicago, IL
Lab ID: 13090865-019

Client Sample ID: B-122 (1-3)
Collection Date: 9/26/2013 8:30:00 AM
Matrix: Soil

Analyses	Result	RL	Qualifier	Units	DF	Date Analyzed
Polynuclear Aromatic Hydrocarbons by GC/MS	**SW8270C (SW3550B)**			Prep Date: **9/27/2013**		Analyst: **DM**
Acenaphthene	ND	0.37		mg/Kg-dry	1	9/30/2013
Acenaphthylene	ND	0.37		mg/Kg-dry	1	9/30/2013
Anthracene	0.45	0.37		mg/Kg-dry	1	9/30/2013
Benz(a)anthracene	1.3	0.37		mg/Kg-dry	1	9/30/2013
Benzo(a)pyrene	1.5	0.37		mg/Kg-dry	1	9/30/2013
Benzo(b)fluoranthene	1.2	0.37		mg/Kg-dry	1	9/30/2013
Benzo(g,h,i)perylene	1.2	0.37		mg/Kg-dry	1	9/30/2013
Benzo(k)fluoranthene	0.91	0.37		mg/Kg-dry	1	9/30/2013
Chrysene	1.4	0.37		mg/Kg-dry	1	9/30/2013
Dibenz(a,h)anthracene	0.57	0.37		mg/Kg-dry	1	9/30/2013
Fluoranthene	2.1	0.37		mg/Kg-dry	1	9/30/2013
Fluorene	ND	0.37		mg/Kg-dry	1	9/30/2013
Indeno(1,2,3-cd)pyrene	0.95	0.37		mg/Kg-dry	1	9/30/2013
Naphthalene	ND	0.37		mg/Kg-dry	1	9/30/2013
Phenanthrene	1.2	0.37		mg/Kg-dry	1	9/30/2013
Pyrene	2	0.37		mg/Kg-dry	1	9/30/2013
Percent Moisture	**D2974**			Prep Date: **9/27/2013**		Analyst: **VA**
Percent Moisture	12.2	0.2	*	wt%	1	9/28/2013

Qualifiers:
ND - Not Detected at the Reporting Limit
J - Analyte detected below quantitation limits
B - Analyte detected in the associated Method Blank
HT - Sample received past holding time
* - Non-accredited parameter
RL - Reporting / Quantitation Limit for the analysis
S - Spike Recovery outside accepted recovery limits
R - RPD outside accepted recovery limits
E - Value above quantitation range
H - Holding time exceeded

STAT Analysis Corporation
2242 West Harrison St., Suite 200, Chicago, IL 60612-3766
Tel: (312) 733-0551 Fax: (312) 733-2386 STATinfo@STATAnalysis.com
Accreditation Numbers: IEPA ELAP 100445; ORELAP IL300001; AIHA 101160; NVLAP LabCode 101202-

Date Reported: October 03, 2013
Date Printed: October 03, 2013

Client:	Terracon Consultants, Inc.	**Client Sample ID:**	B-122 (4-6)
Lab Order:	13090865	**Collection Date:**	9/26/2013 8:35:00 AM
Project:	A2137008, 650 W. 83rd St., Phase II, Chicago, IL	**Matrix:**	Soil
Lab ID:	13090865-020		

Analyses	Result	RL	Qualifier	Units	DF	Date Analyzed
Metals by ICP/MS	**SW6020 (SW3050B)**			Prep Date: **10/1/2013**		Analyst: **JG**
Arsenic	13	1.2		mg/Kg-dry	10	10/2/2013
Percent Moisture	**D2974**			Prep Date: **9/27/2013**		Analyst: **VA**
Percent Moisture	23.7	0.2	*	wt%	1	9/28/2013

Qualifiers:

- ND - Not Detected at the Reporting Limit
- J - Analyte detected below quantitation limits
- B - Analyte detected in the associated Method Blank
- HT - Sample received past holding time
- * - Non-accredited parameter
- RL - Reporting / Quantitation Limit for the analysis
- S - Spike Recovery outside accepted recovery limits
- R - RPD outside accepted recovery limits
- E - Value above quantitation range
- H - Holding time exceeded

STAT Analysis Corporation
2242 West Harrison St., Suite 200, Chicago, IL 60612-3766
Tel: (312) 733-0551 Fax: (312) 733-2386 STATinfo@STATAnalysis.com
Accreditation Numbers: IEPA ELAP 100445; ORELAP IL300001; AIHA 101160; NVLAP LabCode 101202-

Date Reported: October 03, 2013
Date Printed: October 03, 2013

Client: Terracon Consultants, Inc.
Lab Order: 13090865
Project: A2137008, 650 W. 83rd St., Phase II, Chicago, IL
Lab ID: 13090865-021

Client Sample ID: B-123 (1-3)
Collection Date: 9/26/2013 9:05:00 AM
Matrix: Soil

Analyses	Result	RL	Qualifier	Units	DF	Date Analyzed
Polynuclear Aromatic Hydrocarbons by GC/MS	**SW8270C (SW3550B)**			Prep Date: **9/27/2013**		Analyst: **DM**
Acenaphthene	ND	0.042		mg/Kg-dry	1	10/1/2013
Acenaphthylene	ND	0.042		mg/Kg-dry	1	10/1/2013
Anthracene	0.12	0.042		mg/Kg-dry	1	10/1/2013
Benz(a)anthracene	0.54	0.042		mg/Kg-dry	1	10/1/2013
Benzo(a)pyrene	0.47	0.042		mg/Kg-dry	1	10/1/2013
Benzo(b)fluoranthene	0.54	0.042		mg/Kg-dry	1	10/1/2013
Benzo(g,h,i)perylene	0.38	0.042		mg/Kg-dry	1	10/1/2013
Benzo(k)fluoranthene	0.37	0.042		mg/Kg-dry	1	10/1/2013
Chrysene	0.56	0.042		mg/Kg-dry	1	10/1/2013
Dibenz(a,h)anthracene	0.21	0.042		mg/Kg-dry	1	10/1/2013
Fluoranthene	0.95	0.042		mg/Kg-dry	1	10/1/2013
Fluorene	ND	0.042		mg/Kg-dry	1	10/1/2013
Indeno(1,2,3-cd)pyrene	0.37	0.042		mg/Kg-dry	1	10/1/2013
Naphthalene	ND	0.042		mg/Kg-dry	1	10/1/2013
Phenanthrene	0.53	0.042		mg/Kg-dry	1	10/1/2013
Pyrene	0.79	0.042		mg/Kg-dry	1	10/1/2013
Percent Moisture	**D2974**			Prep Date: **9/27/2013**		Analyst: **VA**
Percent Moisture	23.3	0.2	*	wt%	1	9/28/2013

Qualifiers:
ND - Not Detected at the Reporting Limit
J - Analyte detected below quantitation limits
B - Analyte detected in the associated Method Blank
HT - Sample received past holding time
* - Non-accredited parameter
RL - Reporting / Quantitation Limit for the analysis
S - Spike Recovery outside accepted recovery limits
R - RPD outside accepted recovery limits
E - Value above quantitation range
H - Holding time exceeded

STAT Analysis Corporation
2242 West Harrison St., Suite 200, Chicago, IL 60612-3766
Tel: (312) 733-0551 Fax: (312) 733-2386 STATinfo@STATAnalysis.com
Accreditation Numbers: IEPA ELAP 100445; ORELAP IL300001; AIHA 101160; NVLAP LabCode 101202-

Date Reported: October 03, 2013
Date Printed: October 03, 2013

Client:	Terracon Consultants, Inc.	**Client Sample ID:**	B-123 (4-6)
Lab Order:	13090865	**Collection Date:**	9/26/2013 9:07:00 AM
Project:	A2137008, 650 W. 83rd St., Phase II, Chicago, IL	**Matrix:**	Soil
Lab ID:	13090865-022		

Analyses	Result	RL	Qualifier	Units	DF	Date Analyzed
Metals by ICP/MS	**SW6020 (SW3050B)**			Prep Date: **10/1/2013**		Analyst: **JG**
Arsenic	8.2	1		mg/Kg-dry	10	10/2/2013
Percent Moisture	**D2974**			Prep Date: **9/27/2013**		Analyst: **VA**
Percent Moisture	7.3	0.2	*	wt%	1	9/28/2013

Qualifiers:

- ND - Not Detected at the Reporting Limit
- J - Analyte detected below quantitation limits
- B - Analyte detected in the associated Method Blank
- HT - Sample received past holding time
- * - Non-accredited parameter
- RL - Reporting / Quantitation Limit for the analysis
- S - Spike Recovery outside accepted recovery limits
- R - RPD outside accepted recovery limits
- E - Value above quantitation range
- H - Holding time exceeded

STAT Analysis Corporation
2242 West Harrison St., Suite 200, Chicago, IL 60612-3766
Tel: (312) 733-0551 Fax: (312) 733-2386 STATinfo@STATAnalysis.com
Accreditation Numbers: IEPA ELAP 100445; ORELAP IL300001; AIHA 101160; NVLAP LabCode 101202-

Date Reported: October 03, 2013
Date Printed: October 03, 2013

Client: Terracon Consultants, Inc.
Lab Order: 13090865
Project: A2137008, 650 W. 83rd St., Phase II, Chicago, IL
Lab ID: 13090865-023

Client Sample ID: SG-16 Can #177
Collection Date: 9/26/2013 11:36:00 AM
Matrix: Air

Analyses	Result	RL	Qualifier	Units	DF	Date Analyzed
Volatile Organic Compounds in Air by GC/MS	**TO-15**			Prep Date: **9/30/2013**		Analyst: **VP**
1,1,1-Trichloroethane	ND	0.0023	*	mg/m³	1	10/1/2013
1,1,2,2-Tetrachloroethane	ND	0.0029		mg/m³	1	10/1/2013
1,1,2-Trichloroethane	ND	0.0023		mg/m³	1	10/1/2013
1,1-Dichloroethane	ND	0.0017		mg/m³	1	10/1/2013
1,1-Dichloroethene	ND	0.0017		mg/m³	1	10/1/2013
1,2,4-Trichlorobenzene	ND	0.0031		mg/m³	1	10/1/2013
1,2,4-Trimethylbenzene	ND	0.0021		mg/m³	1	10/1/2013
1,2-Dibromoethane	ND	0.0031		mg/m³	1	10/1/2013
1,2-Dichlorobenzene	ND	0.0025		mg/m³	1	10/1/2013
1,2-Dichloroethane	ND	0.0017		mg/m³	1	10/1/2013
1,2-Dichloropropane	ND	0.0019		mg/m³	1	10/1/2013
1,3,5-Trimethylbenzene	ND	0.0021		mg/m³	1	10/1/2013
1,3-Butadiene	0.0015	0.00083		mg/m³	1	10/1/2013
1,3-Dichlorobenzene	ND	0.0025		mg/m³	1	10/1/2013
1,4-Dichlorobenzene	ND	0.0025		mg/m³	1	10/1/2013
1,4-Dioxane	ND	0.0037		mg/m³	1	10/1/2013
2-Butanone	0.024	0.0031		mg/m³	1	10/1/2013
2-Hexanone	ND	0.0085		mg/m³	1	10/1/2013
4-Ethyltoluene	ND	0.0021		mg/m³	1	10/1/2013
4-Methyl-2-pentanone	ND	0.0085		mg/m³	1	10/1/2013
Acetone	0.15	0.01	*	mg/m³	1	10/1/2013
Benzene	0.0079	0.0012		mg/m³	1	10/1/2013
Benzyl chloride	ND	0.0054		mg/m³	1	10/1/2013
Bromodichloromethane	ND	0.0027		mg/m³	1	10/1/2013
Bromoform	ND	0.011		mg/m³	1	10/1/2013
Bromomethane	ND	0.004		mg/m³	1	10/1/2013
Carbon disulfide	0.02	0.0013		mg/m³	1	10/1/2013
Carbon tetrachloride	ND	0.0027		mg/m³	1	10/1/2013
Chlorobenzene	ND	0.0019		mg/m³	1	10/1/2013
Chloroethane	ND	0.001		mg/m³	1	10/1/2013
Chloroform	ND	0.0021		mg/m³	1	10/1/2013
Chloromethane	ND	0.0021		mg/m³	1	10/1/2013
cis-1,2-Dichloroethene	ND	0.0017		mg/m³	1	10/1/2013
cis-1,3-Dichloropropene	ND	0.0019		mg/m³	1	10/1/2013
Cyclohexane	0.0076	0.0015		mg/m³	1	10/1/2013
Dibromochloromethane	ND	0.0035		mg/m³	1	10/1/2013
Dichlorodifluoromethane	ND	0.0021		mg/m³	1	10/1/2013
Ethyl acetate	ND	0.0015		mg/m³	1	10/1/2013

Qualifiers:
ND - Not Detected at the Reporting Limit
J - Analyte detected below quantitation limits
B - Analyte detected in the associated Method Blank
HT - Sample received past holding time
* - Non-accredited parameter
RL - Reporting / Quantitation Limit for the analysis
S - Spike Recovery outside accepted recovery limits
R - RPD outside accepted recovery limits
E - Value above quantitation range
H - Holding time exceeded

STAT Analysis Corporation
2242 West Harrison St., Suite 200, Chicago, IL 60612-3766
Tel: (312) 733-0551 Fax: (312) 733-2386 STATinfo@STATAnalysis.com
Accreditation Numbers: IEPA ELAP 100445; ORELAP IL300001; AIHA 101160; NVLAP LabCode 101202-

Date Reported: October 03, 2013
Date Printed: October 03, 2013

Client: Terracon Consultants, Inc.
Lab Order: 13090865
Project: A2137008, 650 W. 83rd St., Phase II, Chicago, IL
Lab ID: 13090865-023

Client Sample ID: SG-16 Can #177
Collection Date: 9/26/2013 11:36:00 AM
Matrix: Air

Analyses	Result	RL	Qualifier	Units	DF	Date Analyzed
Volatile Organic Compounds in Air by GC/MS	**TO-15**			Prep Date: **9/30/2013**		Analyst: **VP**
Ethylbenzene	ND	0.0019		mg/m³	1	10/1/2013
Freon-113	ND	0.0031		mg/m³	1	10/1/2013
Freon-114	ND	0.015		mg/m³	1	10/1/2013
Heptane	0.018	0.0017		mg/m³	1	10/1/2013
Hexachlorobutadiene	ND	0.0044		mg/m³	1	10/1/2013
Hexane	0.041	0.0037		mg/m³	1	10/1/2013
Isopropyl Alcohol	ND	0.0052		mg/m³	1	10/1/2013
m,p-Xylene	0.0037	0.0035		mg/m³	1	10/1/2013
Methyl tert-butyl ether	0.019	0.0015		mg/m³	1	10/1/2013
Methylene chloride	ND	0.014		mg/m³	1	10/1/2013
Naphthalene	0.0043	0.0021		mg/m³	1	10/1/2013
o-Xylene	ND	0.0019		mg/m³	1	10/1/2013
Propene	0.024	0.0071		mg/m³	1	10/1/2013
Styrene	ND	0.0019		mg/m³	1	10/1/2013
Tetrachloroethene	ND	0.0029		mg/m³	1	10/1/2013
Tetrahydrofuran	ND	0.0031		mg/m³	1	10/1/2013
Toluene	0.0064	0.0017		mg/m³	1	10/1/2013
trans-1,2-Dichloroethene	ND	0.0017		mg/m³	1	10/1/2013
trans-1,3-Dichloropropene	ND	0.0019		mg/m³	1	10/1/2013
Trichloroethene	ND	0.0023		mg/m³	1	10/1/2013
Trichlorofluoromethane	ND	0.0023		mg/m³	1	10/1/2013
Vinyl acetate	ND	0.015		mg/m³	1	10/1/2013
Vinyl chloride	ND	0.001		mg/m³	1	10/1/2013
Xylenes, Total	0.0056	0.0054		mg/m³	1	10/1/2013

Qualifiers:
ND - Not Detected at the Reporting Limit
J - Analyte detected below quantitation limits
B - Analyte detected in the associated Method Blank
HT - Sample received past holding time
* - Non-accredited parameter
RL - Reporting / Quantitation Limit for the analysis
S - Spike Recovery outside accepted recovery limits
R - RPD outside accepted recovery limits
E - Value above quantitation range
H - Holding time exceeded

STAT Analysis Corporation
2242 West Harrison St., Suite 200, Chicago, IL 60612-3766
Tel: (312) 733-0551 Fax: (312) 733-2386 STATinfo@STATAnalysis.com
Accreditation Numbers: IEPA ELAP 100445; ORELAP IL300001; AIHA 101160; NVLAP LabCode 101202-

Date Reported: October 03, 2013
Date Printed: October 03, 2013

Client:	Terracon Consultants, Inc.	**Client Sample ID:**	SG-14 Can #007
Lab Order:	13090865	**Collection Date:**	9/26/2013 1:00:00 PM
Project:	A2137008, 650 W. 83rd St., Phase II, Chicago, IL	**Matrix:**	Air
Lab ID:	13090865-024		

Analyses	Result	RL	Qualifier	Units	DF	Date Analyzed
Volatile Organic Compounds in Air by GC/MS	**TO-15**			Prep Date: **9/30/2013**		Analyst: **VP**
Naphthalene	0.14	0.055		mg/m³	25	10/1/2013

Qualifiers:

- ND - Not Detected at the Reporting Limit
- J - Analyte detected below quantitation limits
- B - Analyte detected in the associated Method Blank
- HT - Sample received past holding time
- * - Non-accredited parameter
- RL - Reporting / Quantitation Limit for the analysis
- S - Spike Recovery outside accepted recovery limits
- R - RPD outside accepted recovery limits
- E - Value above quantitation range
- H - Holding time exceeded

STAT Analysis Corporation
2242 West Harrison St., Suite 200, Chicago, IL 60612-3766
Tel: (312) 733-0551 Fax: (312) 733-2386 STATinfo@STATAnalysis.com
Accreditation Numbers: IEPA ELAP 100445; ORELAP IL300001; AIHA 101160; NVLAP LabCode 101202-

Date Reported: October 03, 2013
Date Printed: October 03, 2013

Client:	Terracon Consultants, Inc.	**Client Sample ID:**	SG-8b Can #002
Lab Order:	13090865	**Collection Date:**	9/26/2013 1:45:00 PM
Project:	A2137008, 650 W. 83rd St., Phase II, Chicago, IL	**Matrix:**	Air
Lab ID:	13090865-025		

Analyses	Result	RL	Qualifier	Units	DF	Date Analyzed
Volatile Organic Compounds in Air by GC/MS	**TO-15**			Prep Date: **9/30/2013**		Analyst: **VP**
Naphthalene	0.14	0.0022		mg/m³	1	10/1/2013

Qualifiers:

- ND - Not Detected at the Reporting Limit
- J - Analyte detected below quantitation limits
- B - Analyte detected in the associated Method Blank
- HT - Sample received past holding time
- * - Non-accredited parameter
- RL - Reporting / Quantitation Limit for the analysis
- S - Spike Recovery outside accepted recovery limits
- R - RPD outside accepted recovery limits
- E - Value above quantitation range
- H - Holding time exceeded

STAT Analysis Corporation
2242 West Harrison St., Suite 200, Chicago, IL 60612-3766
Tel: (312) 733-0551 Fax: (312) 733-2386 STATinfo@STATAnalysis.com
Accreditation Numbers: IEPA ELAP 100445; ORELAP IL300001; AIHA 101160; NVLAP LabCode 101202-

Date Reported: October 03, 2013
Date Printed: October 03, 2013

Client:	Terracon Consultants, Inc.	**Client Sample ID:**	SG-35b Can #015
Lab Order:	13090865	**Collection Date:**	9/26/2013 2:10:00 PM
Project:	A2137008, 650 W. 83rd St., Phase II, Chicago, IL	**Matrix:**	Air
Lab ID:	13090865-026		

Analyses	Result	RL	Qualifier	Units	DF	Date Analyzed
Volatile Organic Compounds in Air by GC/MS TO-15				Prep Date: **9/30/2013**		Analyst: **VP**
Naphthalene	0.0062	0.0021		mg/m³	1	10/1/2013

Qualifiers:
ND - Not Detected at the Reporting Limit
J - Analyte detected below quantitation limits
B - Analyte detected in the associated Method Blank
HT - Sample received past holding time
* - Non-accredited parameter
RL - Reporting / Quantitation Limit for the analysis
S - Spike Recovery outside accepted recovery limits
R - RPD outside accepted recovery limits
E - Value above quantitation range
H - Holding time exceeded

STAT Analysis Corporation
2242 W. Harrison Suite 200, Chicago, Illinois 60612 Phone: (312) 733-0551 Fax: (312) 733-2386
e-mail address: STATinfo@STATAnalysis.com AIHA, NVLAP and NELAP accredited

CHAIN OF CUSTODY RECORD

Nº: 852529 Page : 1 of 2

Company: Terracon
Project Number: A2137008 Client Tracking No.:
Project Name: 650 W 83rd St Phase II
Project Location: Chicago, IL
Sampler(s): Matt Toth
Report To: Richard O'Brien Phone: (312) 575 0014
Fax:
e-mail: rmobrien@terracon.com

P.O. No.:
Quote No.:

QC Level: 1 ___ 2 ___ 3 ___ 4 ___

Turn Around: Standard
Results Needed: / / am/pm

Client Sample Number/Description:	Date Taken	Time Taken	Matrix	Comp.	Grab	Preserv.	No. of Containers	PNAs	TPH (DRO + GRO)	TCLP Lead	Arsenic	BTEX	Remarks	Lab No.:
B-8b (1-3)	9/26/13	12:52	S		X		1		X					001
B-8b (4-6)		12:55	S		X		1		X					002
B-14 VD (8-10)		11:45	S		X		4	X	X		X			003
B-14 VD (10-12)		11:48	S		X		4						HOLD	004
B-14 VD (12-14)		11:50	S		X		4						HOLD	005
B-16 VD (8-10)		9:58	S		X		1			X				006
B-16 VD (10-12)		10:00	S		X		1						HOLD	007
B-16 VD (12-14)		10:02	S		X		1						HOLD	008
B-35b (1-3)		13:30	S		X		1		X					009
B-35b (4-6)		13:33	S		X		1		X					010
B-108 (6-8)		14:30	S		X		1			X				011
B-109 (6-8)		14:37	S		X		1						HOLD	012
B-110 (6-8)		14:47	S		X		1			X				013
B-111 (6-8)		14:55	S		X		1						HOLD	014
B-112 (6-8)		14:18	S		X		1			X				015
B-113 (6-8)		14:22	S		X		1						HOLD	016
B-114 (6-8)		14:02	S		X		1			X				017
B-115 (6-8)		10:30	S		X		1						HOLD	018
B-122 (1-3)		8:30	S		X		1	X						019
B-122 (4-6)	↓	8:35	S		X						X			020

Relinquished by: (Signature) Date/Time: 9/26/13 17:00
Received by: (Signature) Date/Time: 9/26/13 1700
Relinquished by: (Signature) Date/Time:
Received by: (Signature) Date/Time:
Relinquished by: (Signature) Date/Time:
Received by: (Signature) Date/Time:

Comments:

Preservation Code: A = None B = HNO_3 C = NaOH
D = H_2SO_4 E = HCl F = 5035/EnCore G = Other

Laboratory Work Order No.: 13090865

Received on Ice: Yes [X] No [ ]
Temperature: 11.5 °C

STAT Analysis Corporation
2242 W. Harrison Suite 200, Chicago, Illinois 60612 Phone: (312) 733-0551 Fax: (312) 733-2386
e-mail address: STATinfo@STATAnalysis.com AIHA, NVLAP and NELAP accredited

CHAIN OF CUSTODY RECORD

Nº: 852530 Page : 2 of 2

Company: Terracon
Project Number: A2137008 Client Tracking No.:
Project Name: 650 W 83rd St Phase II
Project Location: Chicago, IL
Sampler(s): Matt Toth
Report To: Richard O'Brien Phone:
Fax:
QC Level: 1 ___ 2 ___ 3 ___ 4 ___ e-mail: rmobrien@terracon.com

P.O. No.:
Quote No.:

Turn Around: Standard
Results Needed: / / am/pm

Client Sample Number/Description:	Date Taken	Time Taken	Matrix	Comp.	Grab	Preserv.	No. of Containers	PNAs	TPH CDRO + GRO	TCLP Lead	Arsenic	BTEX	VOCs	Naphthalene	Remarks	Lab No.:
B-123 (1-3)	9/26/13	9:05	S		X		1	X								021
B-123 (4-6)	9/26/13	9:07	S		X		1			X						022
SG-16 Can #177		11:36	A		X		1					X				023
SG-14 Can #007		13:00	A		X		1						X			024
SG-8b Can #002		13:45	A		X		1						X			025
SG-35b Can #015	↓	14:10	A		X		1						X			026

Relinquished by: (Signature) Matt Toth Date/Time: 9/26/13 17:00
Received by: (Signature) Date/Time: 9/26/13 1700
Relinquished by: (Signature) Date/Time:
Received by: (Signature) Date/Time:
Relinquished by: (Signature) Date/Time:
Received by: (Signature) Date/Time:

Comments:

Laboratory Work Order No.: 13090865

Received on Ice: Yes [X] No [ ]

Temperature: 11.5 °C

Preservation Code: A = None B = HNO_3 C = NaOH
D = H_2SO_4 E = HCl F = 5035/EnCore G = Other

STAT Analysis Corporation

Sample Receipt Checklist

Client Name TERRACON - CHICAGO | Date and Time Received: 9/26/2013 5:00:00 PM

Work Order Number 13090865 | Received by: TJW

Checklist completed by: _____ 9/26/13 (Signature / Date) | Reviewed by: LMW 9/27/13 (Initials / Date)

Matrix: | Carrier name | Client Delivered

Shipping container/cooler in good condition?	Yes ☑	No ☐	Not Present ☐	
Custody seals intact on shippping container/cooler?	Yes ☐	No ☐	Not Present ☑	
Custody seals intact on sample bottles?	Yes ☐	No ☐	Not Present ☑	
Chain of custody present?	Yes ☑	No ☐		
Chain of custody signed when relinquished and received?	Yes ☑	No ☐		
Chain of custody agrees with sample labels/containers?	Yes ☑	No ☐		
Samples in proper container/bottle?	Yes ☑	No ☐		
Sample containers intact?	Yes ☑	No ☐		
Sufficient sample volume for indicated test?	Yes ☑	No ☐		
All samples received within holding time?	Yes ☑	No ☐		
Container or Temp Blank temperature in compliance?	Yes ☑	No ☐	Temperature	11.5 °C
Water - VOA vials have zero headspace?	No VOA vials submitted ☐	Yes ☐	No ☐	
Water - Samples pH checked?	Yes ☐	No ☐	Checked by:	_____
Water - Samples properly preserved?	Yes ☐	No ☐	pH Adjusted?	_____

Any No response must be detailed in the comments section below.

Comments: _____

Client / Person contacted: _____ Date contacted: _____ Contacted by: _____

Response: _____

STAT Analysis Corporation
2242 West Harrison St., Suite 200, Chicago, IL 60612-3766
Tel: (312) 733-0551 Fax: (312) 733-2386 STATinfo@STATAnalysis.com
Accreditation Numbers: IEPA ELAP 100445; ORELAP IL300001;AIHA 101160; NVLAP LabCode 101202-

October 17, 2013

Terracon Consultants, Inc.
650 W. Lake Street
Suite 420
Chicago, IL 60661
Telephone: (312) 575-0014
Fax: (312) 575-0111

RE: A2137008, 650 W 83rd St. Phase II, Chicago, IL STAT Project No: 13090931

Dear Richard O'Brien:

STAT Analysis received 33 samples for the referenced project on 9/27/2013 1:50:00 PM. The analytical results are presented in the following report.

This report is revised to reflect additional analysis requested after the initial report was issued.

All analyses were performed in accordance with the requirements of 35 IAC Part 186 / NELAC standards. Analyses were performed in accordance with methods as referenced on the analytical report. Those analytical results expressed on a dry weight basis are also noted on the analytical report.

All analyses were performed within established holding time criteria, and all Quality Control criteria met EPA or laboratory specifications except when noted in the Case Narrative or Analytical Report. If required, an estimate of uncertainty for the analyses can be provided. A listing of accredited methods/parameters can also be provided.

Thank you for the opportunity to serve you and I look forward to working with you in the future. If you have any questions regarding the enclosed materials, please contact me at (312) 733-0551.

Sincerely,

Frank Capoccia
Project Manager

The information contained in this report and any attachments is confidential information intended only for the use of the individual or entities named above. The results of this report relate only to the samples tested. If you have received this report in error, please notify us immediately by phone. This report shall not be reproduced, except in its entirety, unless written approval has been obtained from the laboratory. This analytical report shall become property of the Customer upon payment in full. Otherwise, STAT will be under no obligation to support, defend or discuss the analytical report.

Client: Terracon Consultants, Inc.
Project: A2137008, 650 W 83rd St. Phase II, Chicago, IL
Lab Order: 13090931

Work Order Sample Summary

Lab Sample ID	Client Sample ID	Tag Number	Collection Date	Date Received
13090931-001A	B-101 (6-8)		9/27/2013 8:45:00 AM	9/27/2013
13090931-001B	B-101 (6-8)		9/27/2013 8:45:00 AM	9/27/2013
13090931-002A	B-102 (6-8)		9/27/2013 8:57:00 AM	9/27/2013
13090931-002B	B-102 (6-8)		9/27/2013 8:57:00 AM	9/27/2013
13090931-003A	B-103 (6-8)		9/27/2013 9:25:00 AM	9/27/2013
13090931-003B	B-103 (6-8)		9/27/2013 9:25:00 AM	9/27/2013
13090931-004A	B-104 (6-8)		9/27/2013 9:37:00 AM	9/27/2013
13090931-004B	B-104 (6-8)		9/27/2013 9:37:00 AM	9/27/2013
13090931-005A	B-105 (6-8)		9/27/2013 8:35:00 AM	9/27/2013
13090931-005B	B-105 (6-8)		9/27/2013 8:35:00 AM	9/27/2013
13090931-006A	B-106 (6-8)		9/27/2013 8:20:00 AM	9/27/2013
13090931-006B	B-106 (6-8)		9/27/2013 8:20:00 AM	9/27/2013
13090931-007A	B-107 (6-8)		9/27/2013 9:11:00 AM	9/27/2013
13090931-007B	B-107 (6-8)		9/27/2013 9:11:00 AM	9/27/2013
13090931-008A	B-116 (6-8)		9/27/2013 12:20:00 PM	9/27/2013
13090931-009A	B-117 (6-8)		9/27/2013 12:15:00 PM	9/27/2013
13090931-010A	B-118 (6-8)		9/27/2013 12:27:00 PM	9/27/2013
13090931-011A	B-119 (1-3)		9/27/2013 11:00:00 AM	9/27/2013
13090931-012A	B-119 (6-8)		9/27/2013 11:04:00 AM	9/27/2013
13090931-013A	B-120 (6-8)		9/27/2013 12:35:00 PM	9/27/2013
13090931-014A	B-121 (6-8)		9/27/2013 12:45:00 PM	9/27/2013
13090931-015A	B-17b (4-6)		9/27/2013 11:35:00 AM	9/27/2013
13090931-016A	B-124 (1-3)		9/27/2013 11:20:00 AM	9/27/2013
13090931-017A	B-124 (4-6)		9/27/2013 11:22:00 AM	9/27/2013
13090931-018A	B-125 (1-3)		9/27/2013 11:10:00 AM	9/27/2013
13090931-019A	B-125 (4-6)		9/27/2013 11:12:00 AM	9/27/2013
13090931-020A	B-126 (1-3)		9/27/2013 12:00:00 PM	9/27/2013
13090931-021A	B-126 (4-6)		9/27/2013 12:05:00 PM	9/27/2013
13090931-022A	B-26b (1-3)		9/27/2013 10:30:00 AM	9/27/2013
13090931-023A	B-127 (1-3)		9/27/2013 10:37:00 AM	9/27/2013
13090931-024A	B-128 (1-3)		9/27/2013 10:45:00 AM	9/27/2013
13090931-025A	B-129 (1-3)		9/27/2013 10:52:00 AM	9/27/2013
13090931-026A	B-130 (1-3)		9/27/2013 10:00:00 AM	9/27/2013
13090931-027A	B-130 (4-6)		9/27/2013 10:02:00 AM	9/27/2013
13090931-028A	B-131 (1-3)		9/27/2013 9:51:00 AM	9/27/2013
13090931-029A	B-131 (4-6)		9/27/2013 9:54:00 AM	9/27/2013
13090931-030A	B-132 (1-3)		9/27/2013 10:10:00 AM	9/27/2013
13090931-031A	B-132 (4-6)		9/27/2013 10:12:00 AM	9/27/2013

Client:	Terracon Consultants, Inc.	
Project:	A2137008, 650 W 83rd St. Phase II, Chicago, IL	**Work Order Sample Summary**
Lab Order:	13090931	

Lab Sample ID	Client Sample ID	Tag Number	Collection Date	Date Received
13090931-032A	B-133 (1-3)		9/27/2013 10:15:00 AM	9/27/2013
13090931-033A	B-133 (4-6)		9/27/2013 10:17:00 AM	9/27/2013

CLIENT: Terracon Consultants, Inc.
Project: A2137008, 650 W 83rd St. Phase II, Chicago, I
Lab Order: 13090931

CASE NARRATIVE

The PNA soil extraction holding time of sample B-104 (6-8) (13090931-004B) was exceeded by 4.0 days.

STAT Analysis Corporation
2242 West Harrison St., Suite 200, Chicago, IL 60612-3766
Tel: (312) 733-0551 Fax: (312) 733-2386 STATinfo@STATAnalysis.com
Accreditation Numbers: IEPA ELAP 100445; ORELAP IL300001; AIHA 101160; NVLAP LabCode 101202

Date Reported: October 17, 2013
Date Printed: October 17, 2013

Client: Terracon Consultants, Inc.
Lab Order: 13090931
Project: A2137008, 650 W 83rd St. Phase II, Chicago, IL
Lab ID: 13090931-001

Client Sample ID: B-101 (6-8)
Collection Date 9/27/2013 8:45:00 AM
Matrix: Soil

Analyses	Result	RL	Qualifier	Units	DF	Date Analyzed
Total Petroleum Hydrocarbons		**SW8015M (SW3580A)**		Prep Date: **10/1/2013**		Analyst: **MDM**
TPH (GRO)	ND	25		mg/Kg-dry	1	10/1/2013
TPH (DRO)	ND	25		mg/Kg-dry	1	10/1/2013
Polynuclear Aromatic Hydrocarbons by GC/MS		**SW8270C (SW3550B)**		Prep Date: **10/1/2013**		Analyst: **DM**
Acenaphthene	0.4	0.044		mg/Kg-dry	1	10/3/2013
Acenaphthylene	0.056	0.044		mg/Kg-dry	1	10/3/2013
Anthracene	0.72	0.044		mg/Kg-dry	1	10/3/2013
Benz(a)anthracene	1.5	0.044		mg/Kg-dry	1	10/3/2013
Benzo(a)pyrene	1.5	0.044		mg/Kg-dry	1	10/3/2013
Benzo(b)fluoranthene	1.2	0.044		mg/Kg-dry	1	10/3/2013
Benzo(g,h,i)perylene	0.99	0.044		mg/Kg-dry	1	10/3/2013
Benzo(k)fluoranthene	1.2	0.044		mg/Kg-dry	1	10/3/2013
Chrysene	1.6	0.044		mg/Kg-dry	1	10/3/2013
Dibenz(a,h)anthracene	0.47	0.044		mg/Kg-dry	1	10/3/2013
Fluoranthene	3	0.044		mg/Kg-dry	1	10/3/2013
Fluorene	0.48	0.044		mg/Kg-dry	1	10/3/2013
Indeno(1,2,3-cd)pyrene	0.88	0.044		mg/Kg-dry	1	10/3/2013
Naphthalene	1	0.044		mg/Kg-dry	1	10/3/2013
Phenanthrene	3	0.044		mg/Kg-dry	1	10/3/2013
Pyrene	2.8	0.044		mg/Kg-dry	1	10/3/2013
BTEX by GC/MS		**SW5035/8260B**		Prep Date: **9/30/2013**		Analyst: **ERP**
Benzene	ND	0.0057		mg/Kg-dry	1	10/2/2013
Ethylbenzene	ND	0.0057		mg/Kg-dry	1	10/2/2013
Toluene	ND	0.0057		mg/Kg-dry	1	10/2/2013
Xylenes, Total	ND	0.017		mg/Kg-dry	1	10/2/2013
Percent Moisture		**D2974**		Prep Date: **9/30/2013**		Analyst: **SDA**
Percent Moisture	24.5	0.2	*	wt%	1	9/30/2013

Qualifiers:

- ND - Not Detected at the Reporting Limit
- J - Analyte detected below quantitation limits
- B - Analyte detected in the associated Method Blank
- HT - Sample received past holding time
- * - Non-accredited parameter
- RL - Reporting / Quantitation Limit for the analysis
- S - Spike Recovery outside accepted recovery limits
- R - RPD outside accepted recovery limits
- E - Value above quantitation range
- H - Holding time exceeded

STAT Analysis Corporation
2242 West Harrison St., Suite 200, Chicago, IL 60612-3766
Tel: (312) 733-0551 Fax: (312) 733-2386 STATinfo@STATAnalysis.com
Accreditation Numbers: IEPA ELAP 100445; ORELAP IL300001; AIHA 101160; NVLAP LabCode 101202

Date Reported: October 17, 2013
Date Printed: October 17, 2013

Client: Terracon Consultants, Inc.
Lab Order: 13090931
Project: A2137008, 650 W 83rd St. Phase II, Chicago, IL
Lab ID: 13090931-003

Client Sample ID: B-103 (6-8)
Collection Date 9/27/2013 9:25:00 AM
Matrix: Soil

Analyses	Result	RL	Qualifier	Units	DF	Date Analyzed
Total Petroleum Hydrocarbons	**SW8015M (SW3580A)**			Prep Date: **10/1/2013**		Analyst: **MDM**
TPH (GRO)	ND	26		mg/Kg-dry	1	10/1/2013
TPH (DRO)	ND	26		mg/Kg-dry	1	10/1/2013
Polynuclear Aromatic Hydrocarbons by GC/MS	**SW8270C (SW3550B)**			Prep Date: **10/1/2013**		Analyst: **DM**
Acenaphthene	190	4.3		mg/Kg-dry	10	10/3/2013
Acenaphthylene	65	4.3		mg/Kg-dry	10	10/3/2013
Anthracene	380	4.3		mg/Kg-dry	10	10/3/2013
Benz(a)anthracene	560	43		mg/Kg-dry	100	10/3/2013
Benzo(a)pyrene	500	43		mg/Kg-dry	100	10/3/2013
Benzo(b)fluoranthene	470	4.3		mg/Kg-dry	10	10/3/2013
Benzo(g,h,i)perylene	350	4.3		mg/Kg-dry	10	10/3/2013
Benzo(k)fluoranthene	420	4.3		mg/Kg-dry	10	10/3/2013
Chrysene	570	43		mg/Kg-dry	100	10/3/2013
Dibenz(a,h)anthracene	170	4.3		mg/Kg-dry	10	10/3/2013
Fluoranthene	1300	43		mg/Kg-dry	100	10/3/2013
Fluorene	280	4.3		mg/Kg-dry	10	10/3/2013
Indeno(1,2,3-cd)pyrene	320	4.3		mg/Kg-dry	10	10/3/2013
Naphthalene	510	4.3		mg/Kg-dry	10	10/3/2013
Phenanthrene	1300	43		mg/Kg-dry	100	10/3/2013
Pyrene	1200	43		mg/Kg-dry	100	10/3/2013
BTEX by GC/MS	**SW5035/8260B**			Prep Date: **9/30/2013**		Analyst: **ERP**
Benzene	ND	0.0073		mg/Kg-dry	1	10/2/2013
Ethylbenzene	ND	0.0073		mg/Kg-dry	1	10/2/2013
Toluene	ND	0.0073		mg/Kg-dry	1	10/2/2013
Xylenes, Total	ND	0.022		mg/Kg-dry	1	10/2/2013
Percent Moisture	**D2974**			Prep Date: **9/30/2013**		Analyst: **SDA**
Percent Moisture	24.2	0.2	*	wt%	1	9/30/2013

Qualifiers:
ND - Not Detected at the Reporting Limit
J - Analyte detected below quantitation limits
B - Analyte detected in the associated Method Blank
HT - Sample received past holding time
* - Non-accredited parameter
RL - Reporting / Quantitation Limit for the analysis
S - Spike Recovery outside accepted recovery limits
R - RPD outside accepted recovery limits
E - Value above quantitation range
H - Holding time exceeded

STAT Analysis Corporation
2242 West Harrison St., Suite 200, Chicago, IL 60612-3766
Tel: (312) 733-0551 Fax: (312) 733-2386 STATinfo@STATAnalysis.com
Accreditation Numbers: IEPA ELAP 100445; ORELAP IL300001; AIHA 101160; NVLAP LabCode 101202

Date Reported: October 17, 2013
Date Printed: October 17, 2013

Client: Terracon Consultants, Inc.
Lab Order: 13090931
Project: A2137008, 650 W 83rd St. Phase II, Chicago, IL
Lab ID: 13090931-004

Client Sample ID: B-104 (6-8)
Collection Date 9/27/2013 9:37:00 AM
Matrix: Soil

Analyses	Result	RL	Qualifier	Units	DF	Date Analyzed
Polynuclear Aromatic Hydrocarbons by GC/MS SW8270C (SW3550B)				Prep Date: **10/15/2013**		Analyst: **DM**
Acenaphthene	84	3.3	H	mg/Kg	10	10/15/2013
Acenaphthylene	48	3.3	H	mg/Kg	10	10/15/2013
Anthracene	220	3.3	H	mg/Kg	10	10/15/2013
Benz(a)anthracene	300	3.3	H	mg/Kg	10	10/15/2013
Benzo(a)pyrene	300	3.3	H	mg/Kg	10	10/15/2013
Benzo(b)fluoranthene	250	3.3	H	mg/Kg	10	10/15/2013
Benzo(g,h,i)perylene	160	3.3	H	mg/Kg	10	10/15/2013
Benzo(k)fluoranthene	230	3.3	H	mg/Kg	10	10/15/2013
Chrysene	290	3.3	H	mg/Kg	10	10/15/2013
Dibenz(a,h)anthracene	81	3.3	H	mg/Kg	10	10/15/2013
Fluoranthene	550	16	H	mg/Kg	50	10/15/2013
Fluorene	170	3.3	H	mg/Kg	10	10/15/2013
Indeno(1,2,3-cd)pyrene	140	3.3	H	mg/Kg	10	10/15/2013
Naphthalene	250	3.3	H	mg/Kg	10	10/15/2013
Phenanthrene	680	16	H	mg/Kg	50	10/15/2013
Pyrene	480	16	H	mg/Kg	50	10/15/2013

Qualifiers:
ND - Not Detected at the Reporting Limit
J - Analyte detected below quantitation limits
B - Analyte detected in the associated Method Blank
HT - Sample received past holding time
* - Non-accredited parameter
RL - Reporting / Quantitation Limit for the analysis
S - Spike Recovery outside accepted recovery limits
R - RPD outside accepted recovery limits
E - Value above quantitation range
H - Holding time exceeded

STAT Analysis Corporation
2242 West Harrison St., Suite 200, Chicago, IL 60612-3766
Tel: (312) 733-0551 Fax: (312) 733-2386 STATinfo@STATAnalysis.com
Accreditation Numbers: IEPA ELAP 100445; ORELAP IL300001; AIHA 101160; NVLAP LabCode 101202

Date Reported: October 17, 2013
Date Printed: October 17, 2013

Client: Terracon Consultants, Inc.
Lab Order: 13090931
Project: A2137008, 650 W 83rd St. Phase II, Chicago, IL
Lab ID: 13090931-005

Client Sample ID: B-105 (6-8)
Collection Date 9/27/2013 8:35:00 AM
Matrix: Soil

Analyses	Result	RL	Qualifier	Units	DF	Date Analyzed
Total Petroleum Hydrocarbons	**SW8015M (SW3580A)**			Prep Date: **10/1/2013**		Analyst: **MDM**
TPH (GRO)	31	25		mg/Kg-dry	1	10/1/2013
TPH (DRO)	27	25		mg/Kg-dry	1	10/1/2013
Polynuclear Aromatic Hydrocarbons by GC/MS	**SW8270C (SW3550B)**			Prep Date: **10/1/2013**		Analyst: **DM**
Acenaphthene	33	0.41		mg/Kg-dry	1	10/2/2013
Acenaphthylene	18	0.41		mg/Kg-dry	1	10/2/2013
Anthracene	76	4.1		mg/Kg-dry	10	10/3/2013
Benz(a)anthracene	130	4.1		mg/Kg-dry	10	10/3/2013
Benzo(a)pyrene	120	4.1		mg/Kg-dry	10	10/3/2013
Benzo(b)fluoranthene	96	4.1		mg/Kg-dry	10	10/3/2013
Benzo(g,h,i)perylene	73	4.1		mg/Kg-dry	10	10/3/2013
Benzo(k)fluoranthene	91	4.1		mg/Kg-dry	10	10/3/2013
Chrysene	130	4.1		mg/Kg-dry	10	10/3/2013
Dibenz(a,h)anthracene	39	0.41		mg/Kg-dry	1	10/2/2013
Fluoranthene	300	4.1		mg/Kg-dry	10	10/3/2013
Fluorene	51	4.1		mg/Kg-dry	10	10/3/2013
Indeno(1,2,3-cd)pyrene	66	4.1		mg/Kg-dry	10	10/3/2013
Naphthalene	54	4.1		mg/Kg-dry	10	10/3/2013
Phenanthrene	300	4.1		mg/Kg-dry	10	10/3/2013
Pyrene	260	4.1		mg/Kg-dry	10	10/3/2013
BTEX by GC/MS	**SW5035/8260B**			Prep Date: **9/30/2013**		Analyst: **ERP**
Benzene	ND	0.0057		mg/Kg-dry	1	10/2/2013
Ethylbenzene	ND	0.0057		mg/Kg-dry	1	10/2/2013
Toluene	ND	0.0057		mg/Kg-dry	1	10/2/2013
Xylenes, Total	ND	0.017		mg/Kg-dry	1	10/2/2013
Percent Moisture	**D2974**			Prep Date: **9/30/2013**		Analyst: **SDA**
Percent Moisture	21.1	0.2	*	wt%	1	9/30/2013

Qualifiers:
ND - Not Detected at the Reporting Limit
J - Analyte detected below quantitation limits
B - Analyte detected in the associated Method Blank
HT - Sample received past holding time
* - Non-accredited parameter
RL - Reporting / Quantitation Limit for the analysis
S - Spike Recovery outside accepted recovery limits
R - RPD outside accepted recovery limits
E - Value above quantitation range
H - Holding time exceeded

STAT Analysis Corporation
2242 West Harrison St., Suite 200, Chicago, IL 60612-3766
Tel: (312) 733-0551 Fax: (312) 733-2386 STATinfo@STATAnalysis.com
Accreditation Numbers: IEPA ELAP 100445; ORELAP IL300001; AIHA 101160; NVLAP LabCode 101202

Date Reported: October 17, 2013
Date Printed: October 17, 2013

Client:	Terracon Consultants, Inc.	**Client Sample ID:**	B-106 (6-8)
Lab Order:	13090931	**Collection Date**	9/27/2013 8:20:00 AM
Project:	A2137008, 650 W 83rd St. Phase II, Chicago, IL	**Matrix:**	Soil
Lab ID:	13090931-006		

Analyses	Result	RL	Qualifier	Units	DF	Date Analyzed
TCLP Metals by ICP/MS	**SW1311/6020 (SW3005A)**			Prep Date: **10/15/2013**		Analyst: **JG**
Lead	4.6	0.005		mg/L	5	10/16/2013

Qualifiers:

- ND - Not Detected at the Reporting Limit
- J - Analyte detected below quantitation limits
- B - Analyte detected in the associated Method Blank
- HT - Sample received past holding time
- * - Non-accredited parameter
- RL - Reporting / Quantitation Limit for the analysis
- S - Spike Recovery outside accepted recovery limits
- R - RPD outside accepted recovery limits
- E - Value above quantitation range
- H - Holding time exceeded

STAT Analysis Corporation
2242 West Harrison St., Suite 200, Chicago, IL 60612-3766
Tel: (312) 733-0551 Fax: (312) 733-2386 STATinfo@STATAnalysis.com
Accreditation Numbers: IEPA ELAP 100445; ORELAP IL300001; AIHA 101160; NVLAP LabCode 101202

Date Reported: October 17, 2013
Date Printed: October 17, 2013

Client: Terracon Consultants, Inc.
Lab Order: 13090931
Project: A2137008, 650 W 83rd St. Phase II, Chicago, IL
Lab ID: 13090931-007

Client Sample ID: B-107 (6-8)
Collection Date 9/27/2013 9:11:00 AM
Matrix: Soil

Analyses	Result	RL	Qualifier	Units	DF	Date Analyzed
Total Petroleum Hydrocarbons	**SW8015M (SW3580A)**			Prep Date: **10/1/2013**		Analyst: **MDM**
TPH (GRO)	ND	26		mg/Kg-dry	1	10/1/2013
TPH (DRO)	ND	26		mg/Kg-dry	1	10/1/2013
Polynuclear Aromatic Hydrocarbons by GC/MS	**SW8270C (SW3550B)**			Prep Date: **10/1/2013**		Analyst: **DM**
Acenaphthene	ND	0.044		mg/Kg-dry	1	10/2/2013
Acenaphthylene	0.07	0.044		mg/Kg-dry	1	10/2/2013
Anthracene	0.1	0.044		mg/Kg-dry	1	10/2/2013
Benz(a)anthracene	0.5	0.044		mg/Kg-dry	1	10/2/2013
Benzo(a)pyrene	0.64	0.044		mg/Kg-dry	1	10/2/2013
Benzo(b)fluoranthene	0.46	0.044		mg/Kg-dry	1	10/2/2013
Benzo(g,h,i)perylene	0.47	0.044		mg/Kg-dry	1	10/2/2013
Benzo(k)fluoranthene	0.45	0.044		mg/Kg-dry	1	10/2/2013
Chrysene	0.52	0.044		mg/Kg-dry	1	10/2/2013
Dibenz(a,h)anthracene	0.19	0.044		mg/Kg-dry	1	10/2/2013
Fluoranthene	0.89	0.044		mg/Kg-dry	1	10/2/2013
Fluorene	ND	0.044		mg/Kg-dry	1	10/2/2013
Indeno(1,2,3-cd)pyrene	0.37	0.044		mg/Kg-dry	1	10/2/2013
Naphthalene	ND	0.044		mg/Kg-dry	1	10/2/2013
Phenanthrene	0.28	0.044		mg/Kg-dry	1	10/2/2013
Pyrene	1	0.044		mg/Kg-dry	1	10/2/2013
BTEX by GC/MS	**SW5035/8260B**			Prep Date: **9/30/2013**		Analyst: **ERP**
Benzene	ND	0.0065		mg/Kg-dry	1	10/2/2013
Ethylbenzene	ND	0.0065		mg/Kg-dry	1	10/2/2013
Toluene	ND	0.0065		mg/Kg-dry	1	10/2/2013
Xylenes, Total	ND	0.019		mg/Kg-dry	1	10/2/2013
Percent Moisture	**D2974**			Prep Date: **9/30/2013**		Analyst: **SDA**
Percent Moisture	24.7	0.2	*	wt%	1	9/30/2013

Qualifiers:
ND - Not Detected at the Reporting Limit
J - Analyte detected below quantitation limits
B - Analyte detected in the associated Method Blank
HT - Sample received past holding time
* - Non-accredited parameter
RL - Reporting / Quantitation Limit for the analysis
S - Spike Recovery outside accepted recovery limits
R - RPD outside accepted recovery limits
E - Value above quantitation range
H - Holding time exceeded

STAT Analysis Corporation
2242 West Harrison St., Suite 200, Chicago, IL 60612-3766
Tel: (312) 733-0551 Fax: (312) 733-2386 STATinfo@STATAnalysis.com
Accreditation Numbers: IEPA ELAP 100445; ORELAP IL300001; AIHA 101160; NVLAP LabCode 101202

Date Reported: October 17, 2013
Date Printed: October 17, 2013

Client:	Terracon Consultants, Inc.	**Client Sample ID:**	B-116 (6-8)
Lab Order:	13090931	**Collection Date**	9/27/2013 12:20:00 PM
Project:	A2137008, 650 W 83rd St. Phase II, Chicago, IL	**Matrix:**	Soil
Lab ID:	13090931-008		

Analyses	Result	RL	Qualifier	Units	DF	Date Analyzed
TCLP Metals by ICP/MS		**SW1311/6020 (SW3005A)**		Prep Date: **10/2/2013**		Analyst: **JG**
Lead	0.029	0.005		mg/L	5	10/2/2013

Qualifiers:

ND - Not Detected at the Reporting Limit
J - Analyte detected below quantitation limits
B - Analyte detected in the associated Method Blank
HT - Sample received past holding time
* - Non-accredited parameter
RL - Reporting / Quantitation Limit for the analysis
S - Spike Recovery outside accepted recovery limits
R - RPD outside accepted recovery limits
E - Value above quantitation range
H - Holding time exceeded

STAT Analysis Corporation
2242 West Harrison St., Suite 200, Chicago, IL 60612-3766
Tel: (312) 733-0551 Fax: (312) 733-2386 STATinfo@STATAnalysis.com
Accreditation Numbers: IEPA ELAP 100445; ORELAP IL300001; AIHA 101160; NVLAP LabCode 101202

Date Reported: October 17, 2013
Date Printed: October 17, 2013

Client:	Terracon Consultants, Inc.	**Client Sample ID:**	B-118 (6-8)
Lab Order:	13090931	**Collection Date**	9/27/2013 12:27:00 PM
Project:	A2137008, 650 W 83rd St. Phase II, Chicago, IL	**Matrix:**	Soil
Lab ID:	13090931-010		

Analyses	Result	RL	Qualifier	Units	DF	Date Analyzed
TCLP Metals by ICP/MS		**SW1311/6020 (SW3005A)**		Prep Date: **10/2/2013**		Analyst: **JG**
Lead	0.014	0.005		mg/L	5	10/2/2013

Qualifiers:	ND - Not Detected at the Reporting Limit	RL - Reporting / Quantitation Limit for the analysis
	J - Analyte detected below quantitation limits	S - Spike Recovery outside accepted recovery limits
	B - Analyte detected in the associated Method Blank	R - RPD outside accepted recovery limits
	HT - Sample received past holding time	E - Value above quantitation range
	* - Non-accredited parameter	H - Holding time exceeded

STAT Analysis Corporation
2242 West Harrison St., Suite 200, Chicago, IL 60612-3766
Tel: (312) 733-0551 Fax: (312) 733-2386 STATinfo@STATAnalysis.com
Accreditation Numbers: IEPA ELAP 100445; ORELAP IL300001; AIHA 101160; NVLAP LabCode 101202

Date Reported: October 17, 2013
Date Printed: October 17, 2013

Client:	Terracon Consultants, Inc.	**Client Sample ID:**	B-119 (1-3)
Lab Order:	13090931	**Collection Date**	9/27/2013 11:00:00 AM
Project:	A2137008, 650 W 83rd St. Phase II, Chicago, IL	**Matrix:**	Soil
Lab ID:	13090931-011		

Analyses	Result	RL	Qualifier	Units	DF	Date Analyzed
Metals by ICP/MS	**SW6020 (SW3050B)**			Prep Date: **10/3/2013**		Analyst: **JG**
Lead	990	0.64		mg/Kg-dry	10	10/3/2013
pH (25 °C)	**SW9045C**			Prep Date: **9/30/2013**		Analyst: **RW**
pH	7.5			pH Units	1	9/30/2013
Percent Moisture	**D2974**			Prep Date: **9/30/2013**		Analyst: **SDA**
Percent Moisture	20.7	0.2	*	wt%	1	9/30/2013

Qualifiers:	ND - Not Detected at the Reporting Limit	RL - Reporting / Quantitation Limit for the analysis
	J - Analyte detected below quantitation limits	S - Spike Recovery outside accepted recovery limits
	B - Analyte detected in the associated Method Blank	R - RPD outside accepted recovery limits
	HT - Sample received past holding time	E - Value above quantitation range
	* - Non-accredited parameter	H - Holding time exceeded

STAT Analysis Corporation
2242 West Harrison St., Suite 200, Chicago, IL 60612-3766
Tel: (312) 733-0551 Fax: (312) 733-2386 STATinfo@STATAnalysis.com
Accreditation Numbers: IEPA ELAP 100445; ORELAP IL300001; AIHA 101160; NVLAP LabCode 101202

Date Reported: October 17, 2013
Date Printed: October 17, 2013

Client:	Terracon Consultants, Inc.	**Client Sample ID:**	B-119 (6-8)
Lab Order:	13090931	**Collection Date**	9/27/2013 11:04:00 AM
Project:	A2137008, 650 W 83rd St. Phase II, Chicago, IL	**Matrix:**	Soil
Lab ID:	13090931-012		

Analyses	Result	RL	Qualifier	Units	DF	Date Analyzed
Metals by ICP/MS	**SW6020 (SW3050B)**			Prep Date: **10/15/2013**		Analyst: **JG**
Lead	14	0.49		mg/Kg	10	10/16/2013
pH (25 °C)	**SW9045C**			Prep Date: **10/14/2013**		Analyst: **RW**
pH	8.6		H	pH Units	1	10/14/2013

Qualifiers:	ND - Not Detected at the Reporting Limit	RL - Reporting / Quantitation Limit for the analysis
	J - Analyte detected below quantitation limits	S - Spike Recovery outside accepted recovery limits
	B - Analyte detected in the associated Method Blank	R - RPD outside accepted recovery limits
	HT - Sample received past holding time	E - Value above quantitation range
	* - Non-accredited parameter	H - Holding time exceeded

STAT Analysis Corporation
2242 West Harrison St., Suite 200, Chicago, IL 60612-3766
Tel: (312) 733-0551 Fax: (312) 733-2386 STATinfo@STATAnalysis.com
Accreditation Numbers: IEPA ELAP 100445; ORELAP IL300001; AIHA 101160; NVLAP LabCode 101202

Date Reported: October 17, 2013
Date Printed: October 17, 2013

Client: Terracon Consultants, Inc.
Lab Order: 13090931
Project: A2137008, 650 W 83rd St. Phase II, Chicago, IL
Lab ID: 13090931-013

Client Sample ID: B-120 (6-8)
Collection Date: 9/27/2013 12:35:00 PM
Matrix: Soil

Analyses	Result	RL	Qualifier	Units	DF	Date Analyzed
TCLP Metals by ICP/MS	**SW1311/6020 (SW3005A)**			Prep Date: **10/2/2013**		Analyst: **JG**
Lead	ND	0.005		mg/L	5	10/2/2013

Qualifiers:
ND - Not Detected at the Reporting Limit
J - Analyte detected below quantitation limits
B - Analyte detected in the associated Method Blank
HT - Sample received past holding time
* - Non-accredited parameter
RL - Reporting / Quantitation Limit for the analysis
S - Spike Recovery outside accepted recovery limits
R - RPD outside accepted recovery limits
E - Value above quantitation range
H - Holding time exceeded

STAT Analysis Corporation
2242 West Harrison St., Suite 200, Chicago, IL 60612-3766
Tel: (312) 733-0551 Fax: (312) 733-2386 STATinfo@STATAnalysis.com
Accreditation Numbers: IEPA ELAP 100445; ORELAP IL300001; AIHA 101160; NVLAP LabCode 101202

Date Reported: October 17, 2013
Date Printed: October 17, 2013

Client: Terracon Consultants, Inc.
Lab Order: 13090931
Project: A2137008, 650 W 83rd St. Phase II, Chicago, IL
Lab ID: 13090931-015

Client Sample ID: B-17b (4-6)
Collection Date 9/27/2013 11:35:00 AM
Matrix: Soil

Analyses	Result	RL	Qualifier	Units	DF	Date Analyzed
Mercury Species Fractionation		**SW7470A/7471A (SW3200)**		Prep Date: **10/3/2013**		Analyst: **LB**
Extractable Mercury	0.013	0.0071		mg/Kg-dry	1	10/3/2013
Mercury Species Fractionation		**SW7470A/7471A (SW3200)**		Prep Date: **10/3/2013**		Analyst: **LB**
Semi-mobile Mercury	0.039	0.0071		mg/Kg-dry	1	10/3/2013
Mercury Species Fractionation		**SW7470A/7471A (SW3200)**		Prep Date: **10/3/2013**		Analyst: **LB**
Non-mobile Mercury	ND	0.0071		mg/Kg-dry	1	10/3/2013
Mercury		**SW7471A (SW3200)**		Prep Date: **10/3/2013**		Analyst: **LB**
Mercury	0.026	0.0071		mg/Kg-dry	1	10/3/2013
Percent Moisture		**D2974**		Prep Date: **9/30/2013**		Analyst: **SDA**
Percent Moisture	15.1	0.2	*	wt%	1	9/30/2013

Qualifiers:
ND - Not Detected at the Reporting Limit
J - Analyte detected below quantitation limits
B - Analyte detected in the associated Method Blank
HT - Sample received past holding time
* - Non-accredited parameter
RL - Reporting / Quantitation Limit for the analysis
S - Spike Recovery outside accepted recovery limits
R - RPD outside accepted recovery limits
E - Value above quantitation range
H - Holding time exceeded

STAT Analysis Corporation
2242 West Harrison St., Suite 200, Chicago, IL 60612-3766
Tel: (312) 733-0551 Fax: (312) 733-2386 STATinfo@STATAnalysis.com
Accreditation Numbers: IEPA ELAP 100445; ORELAP IL300001; AIHA 101160; NVLAP LabCode 101202

Date Reported: October 17, 2013
Date Printed: October 17, 2013

Client: Terracon Consultants, Inc.
Lab Order: 13090931
Project: A2137008, 650 W 83rd St. Phase II, Chicago, IL
Lab ID: 13090931-016

Client Sample ID: B-124 (1-3)
Collection Date 9/27/2013 11:20:00 AM
Matrix: Soil

Analyses	Result	RL	Qualifier	Units	DF	Date Analyzed
Polynuclear Aromatic Hydrocarbons by GC/MS SW8270C (SW3550B)				Prep Date: **10/1/2013**		Analyst: **DM**
Acenaphthene	0.054	0.041		mg/Kg-dry	1	10/2/2013
Acenaphthylene	ND	0.041		mg/Kg-dry	1	10/2/2013
Anthracene	0.1	0.041		mg/Kg-dry	1	10/2/2013
Benz(a)anthracene	0.2	0.041		mg/Kg-dry	1	10/2/2013
Benzo(a)pyrene	0.2	0.041		mg/Kg-dry	1	10/2/2013
Benzo(b)fluoranthene	0.17	0.041		mg/Kg-dry	1	10/2/2013
Benzo(g,h,i)perylene	0.13	0.041		mg/Kg-dry	1	10/2/2013
Benzo(k)fluoranthene	0.15	0.041		mg/Kg-dry	1	10/2/2013
Chrysene	0.22	0.041		mg/Kg-dry	1	10/2/2013
Dibenz(a,h)anthracene	0.072	0.041		mg/Kg-dry	1	10/2/2013
Fluoranthene	0.42	0.041		mg/Kg-dry	1	10/2/2013
Fluorene	0.049	0.041		mg/Kg-dry	1	10/2/2013
Indeno(1,2,3-cd)pyrene	0.11	0.041		mg/Kg-dry	1	10/2/2013
Naphthalene	0.082	0.041		mg/Kg-dry	1	10/2/2013
Phenanthrene	0.43	0.041		mg/Kg-dry	1	10/2/2013
Pyrene	0.41	0.041		mg/Kg-dry	1	10/2/2013
Percent Moisture	**D2974**			Prep Date: **9/30/2013**		Analyst: **SDA**
Percent Moisture	20.3	0.2	*	wt%	1	9/30/2013

Qualifiers:
ND - Not Detected at the Reporting Limit
J - Analyte detected below quantitation limits
B - Analyte detected in the associated Method Blank
HT - Sample received past holding time
* - Non-accredited parameter
RL - Reporting / Quantitation Limit for the analysis
S - Spike Recovery outside accepted recovery limits
R - RPD outside accepted recovery limits
E - Value above quantitation range
H - Holding time exceeded

STAT Analysis Corporation
2242 West Harrison St., Suite 200, Chicago, IL 60612-3766
Tel: (312) 733-0551 Fax: (312) 733-2386 STATinfo@STATAnalysis.com
Accreditation Numbers: IEPA ELAP 100445; ORELAP IL300001; AIHA 101160; NVLAP LabCode 101202

Date Reported: October 17, 2013
Date Printed: October 17, 2013

Client: Terracon Consultants, Inc.
Lab Order: 13090931
Project: A2137008, 650 W 83rd St. Phase II, Chicago, IL
Lab ID: 13090931-017

Client Sample ID: B-124 (4-6)
Collection Date 9/27/2013 11:22:00 AM
Matrix: Soil

Analyses	Result	RL	Qualifier	Units	DF	Date Analyzed
Polynuclear Aromatic Hydrocarbons by GC/MS	**SW8270C (SW3550B)**			Prep Date: **10/1/2013**		Analyst: **DM**
Acenaphthene	ND	0.038		mg/Kg-dry	1	10/2/2013
Acenaphthylene	0.039	0.038		mg/Kg-dry	1	10/2/2013
Anthracene	0.058	0.038		mg/Kg-dry	1	10/2/2013
Benz(a)anthracene	0.26	0.038		mg/Kg-dry	1	10/2/2013
Benzo(a)pyrene	0.28	0.038		mg/Kg-dry	1	10/2/2013
Benzo(b)fluoranthene	0.21	0.038		mg/Kg-dry	1	10/2/2013
Benzo(g,h,i)perylene	0.21	0.038		mg/Kg-dry	1	10/2/2013
Benzo(k)fluoranthene	0.21	0.038		mg/Kg-dry	1	10/2/2013
Chrysene	0.25	0.038		mg/Kg-dry	1	10/2/2013
Dibenz(a,h)anthracene	0.095	0.038		mg/Kg-dry	1	10/2/2013
Fluoranthene	0.5	0.038		mg/Kg-dry	1	10/2/2013
Fluorene	ND	0.038		mg/Kg-dry	1	10/2/2013
Indeno(1,2,3-cd)pyrene	0.18	0.038		mg/Kg-dry	1	10/2/2013
Naphthalene	ND	0.038		mg/Kg-dry	1	10/2/2013
Phenanthrene	0.2	0.038		mg/Kg-dry	1	10/2/2013
Pyrene	0.48	0.038		mg/Kg-dry	1	10/2/2013
Percent Moisture	**D2974**			Prep Date: **9/30/2013**		Analyst: **SDA**
Percent Moisture	14.5	0.2	*	wt%	1	9/30/2013

Qualifiers:
ND - Not Detected at the Reporting Limit
J - Analyte detected below quantitation limits
B - Analyte detected in the associated Method Blank
HT - Sample received past holding time
* - Non-accredited parameter
RL - Reporting / Quantitation Limit for the analysis
S - Spike Recovery outside accepted recovery limits
R - RPD outside accepted recovery limits
E - Value above quantitation range
H - Holding time exceeded

STAT Analysis Corporation
2242 West Harrison St., Suite 200, Chicago, IL 60612-3766
Tel: (312) 733-0551 Fax: (312) 733-2386 STATinfo@STATAnalysis.com
Accreditation Numbers: IEPA ELAP 100445; ORELAP IL300001; AIHA 101160; NVLAP LabCode 101202

Date Reported: October 17, 2013
Date Printed: October 17, 2013

Client: Terracon Consultants, Inc.
Lab Order: 13090931
Project: A2137008, 650 W 83rd St. Phase II, Chicago, IL
Lab ID: 13090931-018

Client Sample ID: B-125 (1-3)
Collection Date 9/27/2013 11:10:00 AM
Matrix: Soil

Analyses	Result	RL	Qualifier	Units	DF	Date Analyzed
Polynuclear Aromatic Hydrocarbons by GC/MS SW8270C (SW3550B)				Prep Date: **10/1/2013**		Analyst: **DM**
Acenaphthene	0.23	0.038		mg/Kg-dry	1	10/2/2013
Acenaphthylene	0.08	0.038		mg/Kg-dry	1	10/2/2013
Anthracene	0.62	0.038		mg/Kg-dry	1	10/2/2013
Benz(a)anthracene	2.3	0.038		mg/Kg-dry	1	10/2/2013
Benzo(a)pyrene	2.4	0.038		mg/Kg-dry	1	10/2/2013
Benzo(b)fluoranthene	2.4	0.038		mg/Kg-dry	1	10/2/2013
Benzo(g,h,i)perylene	1.6	0.038		mg/Kg-dry	1	10/2/2013
Benzo(k)fluoranthene	1.9	0.038		mg/Kg-dry	1	10/2/2013
Chrysene	2.5	0.038		mg/Kg-dry	1	10/2/2013
Dibenz(a,h)anthracene	0.8	0.038		mg/Kg-dry	1	10/2/2013
Fluoranthene	4.2	0.038		mg/Kg-dry	1	10/2/2013
Fluorene	0.23	0.038		mg/Kg-dry	1	10/2/2013
Indeno(1,2,3-cd)pyrene	1.5	0.038		mg/Kg-dry	1	10/2/2013
Naphthalene	0.093	0.038		mg/Kg-dry	1	10/2/2013
Phenanthrene	2.6	0.038		mg/Kg-dry	1	10/2/2013
Pyrene	4.1	0.038		mg/Kg-dry	1	10/2/2013
Percent Moisture	**D2974**			Prep Date: **9/30/2013**		Analyst: **SDA**
Percent Moisture	13.8	0.2	*	wt%	1	9/30/2013

Qualifiers:
ND - Not Detected at the Reporting Limit
J - Analyte detected below quantitation limits
B - Analyte detected in the associated Method Blank
HT - Sample received past holding time
* - Non-accredited parameter
RL - Reporting / Quantitation Limit for the analysis
S - Spike Recovery outside accepted recovery limits
R - RPD outside accepted recovery limits
E - Value above quantitation range
H - Holding time exceeded

STAT Analysis Corporation
2242 West Harrison St., Suite 200, Chicago, IL 60612-3766
Tel: (312) 733-0551 Fax: (312) 733-2386 STATinfo@STATAnalysis.com
Accreditation Numbers: IEPA ELAP 100445; ORELAP IL300001; AIHA 101160; NVLAP LabCode 101202

Date Reported: October 17, 2013
Date Printed: October 17, 2013

Client: Terracon Consultants, Inc.
Lab Order: 13090931
Project: A2137008, 650 W 83rd St. Phase II, Chicago, IL
Lab ID: 13090931-019

Client Sample ID: B-125 (4-6)
Collection Date 9/27/2013 11:12:00 AM
Matrix: Soil

Analyses	Result	RL	Qualifier	Units	DF	Date Analyzed
Polynuclear Aromatic Hydrocarbons by GC/MS	**SW8270C (SW3550B)**			Prep Date: **10/1/2013**		Analyst: **DM**
Acenaphthene	ND	0.044		mg/Kg-dry	1	10/2/2013
Acenaphthylene	ND	0.044		mg/Kg-dry	1	10/2/2013
Anthracene	ND	0.044		mg/Kg-dry	1	10/2/2013
Benz(a)anthracene	ND	0.044		mg/Kg-dry	1	10/2/2013
Benzo(a)pyrene	ND	0.044		mg/Kg-dry	1	10/2/2013
Benzo(b)fluoranthene	ND	0.044		mg/Kg-dry	1	10/2/2013
Benzo(g,h,i)perylene	ND	0.044		mg/Kg-dry	1	10/2/2013
Benzo(k)fluoranthene	ND	0.044		mg/Kg-dry	1	10/2/2013
Chrysene	ND	0.044		mg/Kg-dry	1	10/2/2013
Dibenz(a,h)anthracene	ND	0.044		mg/Kg-dry	1	10/2/2013
Fluoranthene	ND	0.044		mg/Kg-dry	1	10/2/2013
Fluorene	ND	0.044		mg/Kg-dry	1	10/2/2013
Indeno(1,2,3-cd)pyrene	ND	0.044		mg/Kg-dry	1	10/2/2013
Naphthalene	ND	0.044		mg/Kg-dry	1	10/2/2013
Phenanthrene	ND	0.044		mg/Kg-dry	1	10/2/2013
Pyrene	ND	0.044		mg/Kg-dry	1	10/2/2013
Percent Moisture	**D2974**			Prep Date: **9/30/2013**		Analyst: **SDA**
Percent Moisture	25.7	0.2	*	wt%	1	9/30/2013

Qualifiers:
ND - Not Detected at the Reporting Limit
J - Analyte detected below quantitation limits
B - Analyte detected in the associated Method Blank
HT - Sample received past holding time
* - Non-accredited parameter
RL - Reporting / Quantitation Limit for the analysis
S - Spike Recovery outside accepted recovery limits
R - RPD outside accepted recovery limits
E - Value above quantitation range
H - Holding time exceeded

STAT Analysis Corporation
2242 West Harrison St., Suite 200, Chicago, IL 60612-3766
Tel: (312) 733-0551 Fax: (312) 733-2386 STATinfo@STATAnalysis.com
Accreditation Numbers: IEPA ELAP 100445; ORELAP IL300001; AIHA 101160; NVLAP LabCode 101202

Date Reported: October 17, 2013
Date Printed: October 17, 2013

Client: Terracon Consultants, Inc.
Lab Order: 13090931
Project: A2137008, 650 W 83rd St. Phase II, Chicago, IL
Lab ID: 13090931-020

Client Sample ID: B-126 (1-3)
Collection Date 9/27/2013 12:00:00 PM
Matrix: Soil

Analyses	Result	RL	Qualifier	Units	DF	Date Analyzed
Polynuclear Aromatic Hydrocarbons by GC/MS	**SW8270C (SW3550B)**			Prep Date: **10/1/2013**		Analyst: **DM**
Acenaphthene	ND	0.04		mg/Kg-dry	1	10/2/2013
Acenaphthylene	ND	0.04		mg/Kg-dry	1	10/2/2013
Anthracene	ND	0.04		mg/Kg-dry	1	10/2/2013
Benz(a)anthracene	ND	0.04		mg/Kg-dry	1	10/2/2013
Benzo(a)pyrene	ND	0.04		mg/Kg-dry	1	10/2/2013
Benzo(b)fluoranthene	ND	0.04		mg/Kg-dry	1	10/2/2013
Benzo(g,h,i)perylene	ND	0.04		mg/Kg-dry	1	10/2/2013
Benzo(k)fluoranthene	ND	0.04		mg/Kg-dry	1	10/2/2013
Chrysene	ND	0.04		mg/Kg-dry	1	10/2/2013
Dibenz(a,h)anthracene	ND	0.04		mg/Kg-dry	1	10/2/2013
Fluoranthene	ND	0.04		mg/Kg-dry	1	10/2/2013
Fluorene	ND	0.04		mg/Kg-dry	1	10/2/2013
Indeno(1,2,3-cd)pyrene	ND	0.04		mg/Kg-dry	1	10/2/2013
Naphthalene	ND	0.04		mg/Kg-dry	1	10/2/2013
Phenanthrene	ND	0.04		mg/Kg-dry	1	10/2/2013
Pyrene	ND	0.04		mg/Kg-dry	1	10/2/2013
Percent Moisture	**D2974**			Prep Date: **9/30/2013**		Analyst: **SDA**
Percent Moisture	17.5	0.2	*	wt%	1	9/30/2013

Qualifiers:
ND - Not Detected at the Reporting Limit
J - Analyte detected below quantitation limits
B - Analyte detected in the associated Method Blank
HT - Sample received past holding time
* - Non-accredited parameter
RL - Reporting / Quantitation Limit for the analysis
S - Spike Recovery outside accepted recovery limits
R - RPD outside accepted recovery limits
E - Value above quantitation range
H - Holding time exceeded

STAT Analysis Corporation
2242 West Harrison St., Suite 200, Chicago, IL 60612-3766
Tel: (312) 733-0551 Fax: (312) 733-2386 STATinfo@STATAnalysis.com
Accreditation Numbers: IEPA ELAP 100445; ORELAP IL300001; AIHA 101160; NVLAP LabCode 101202

Date Reported: October 17, 2013
Date Printed: October 17, 2013

Client: Terracon Consultants, Inc.
Lab Order: 13090931
Project: A2137008, 650 W 83rd St. Phase II, Chicago, IL
Lab ID: 13090931-021

Client Sample ID: B-126 (4-6)
Collection Date 9/27/2013 12:05:00 PM
Matrix: Soil

Analyses	Result	RL	Qualifier	Units	DF	Date Analyzed
Polynuclear Aromatic Hydrocarbons by GC/MS	**SW8270C (SW3550B)**			Prep Date: **10/1/2013**		Analyst: **DM**
Acenaphthene	ND	0.043		mg/Kg-dry	1	10/2/2013
Acenaphthylene	ND	0.043		mg/Kg-dry	1	10/2/2013
Anthracene	ND	0.043		mg/Kg-dry	1	10/2/2013
Benz(a)anthracene	ND	0.043		mg/Kg-dry	1	10/2/2013
Benzo(a)pyrene	ND	0.043		mg/Kg-dry	1	10/2/2013
Benzo(b)fluoranthene	ND	0.043		mg/Kg-dry	1	10/2/2013
Benzo(g,h,i)perylene	ND	0.043		mg/Kg-dry	1	10/2/2013
Benzo(k)fluoranthene	ND	0.043		mg/Kg-dry	1	10/2/2013
Chrysene	0.044	0.043		mg/Kg-dry	1	10/2/2013
Dibenz(a,h)anthracene	ND	0.043		mg/Kg-dry	1	10/2/2013
Fluoranthene	0.055	0.043		mg/Kg-dry	1	10/2/2013
Fluorene	ND	0.043		mg/Kg-dry	1	10/2/2013
Indeno(1,2,3-cd)pyrene	ND	0.043		mg/Kg-dry	1	10/2/2013
Naphthalene	ND	0.043		mg/Kg-dry	1	10/2/2013
Phenanthrene	0.045	0.043		mg/Kg-dry	1	10/2/2013
Pyrene	0.079	0.043		mg/Kg-dry	1	10/2/2013
Percent Moisture	**D2974**			Prep Date: **9/30/2013**		Analyst: **SDA**
Percent Moisture	24.0	0.2	*	wt%	1	9/30/2013

Qualifiers:
ND - Not Detected at the Reporting Limit
J - Analyte detected below quantitation limits
B - Analyte detected in the associated Method Blank
HT - Sample received past holding time
* - Non-accredited parameter
RL - Reporting / Quantitation Limit for the analysis
S - Spike Recovery outside accepted recovery limits
R - RPD outside accepted recovery limits
E - Value above quantitation range
H - Holding time exceeded

STAT Analysis Corporation
2242 West Harrison St., Suite 200, Chicago, IL 60612-3766
Tel: (312) 733-0551 Fax: (312) 733-2386 STATinfo@STATAnalysis.com
Accreditation Numbers: IEPA ELAP 100445; ORELAP IL300001; AIHA 101160; NVLAP LabCode 101202

Date Reported: October 17, 2013
Date Printed: October 17, 2013

Client: Terracon Consultants, Inc.
Lab Order: 13090931
Project: A2137008, 650 W 83rd St. Phase II, Chicago, IL
Lab ID: 13090931-022

Client Sample ID: B-26b (1-3)
Collection Date 9/27/2013 10:30:00 AM
Matrix: Soil

Analyses	Result	RL	Qualifier	Units	DF	Date Analyzed
Total Petroleum Hydrocarbons	**SW8015M (SW3580A)**			Prep Date: **10/1/2013**		Analyst: **MDM**
TPH (GRO)	ND	22		mg/Kg-dry	1	10/1/2013
TPH (DRO)	ND	22		mg/Kg-dry	1	10/1/2013
Percent Moisture	**D2974**			Prep Date: **9/30/2013**		Analyst: **SDA**
Percent Moisture	12.2	0.2	*	wt%	1	9/30/2013

Qualifiers:
ND - Not Detected at the Reporting Limit
J - Analyte detected below quantitation limits
B - Analyte detected in the associated Method Blank
HT - Sample received past holding time
* - Non-accredited parameter
RL - Reporting / Quantitation Limit for the analysis
S - Spike Recovery outside accepted recovery limits
R - RPD outside accepted recovery limits
E - Value above quantitation range
H - Holding time exceeded

STAT Analysis Corporation
2242 West Harrison St., Suite 200, Chicago, IL 60612-3766
Tel: (312) 733-0551 Fax: (312) 733-2386 STATinfo@STATAnalysis.com
Accreditation Numbers: IEPA ELAP 100445; ORELAP IL300001; AIHA 101160; NVLAP LabCode 101202

Date Reported: October 17, 2013
Date Printed: October 17, 2013

Client: Terracon Consultants, Inc.
Lab Order: 13090931
Project: A2137008, 650 W 83rd St. Phase II, Chicago, IL
Lab ID: 13090931-023

Client Sample ID: B-127 (1-3)
Collection Date 9/27/2013 10:37:00 AM
Matrix: Soil

Analyses	Result	RL	Qualifier	Units	DF	Date Analyzed
Polynuclear Aromatic Hydrocarbons by GC/MS	**SW8270C (SW3550B)**			Prep Date: **10/1/2013**		Analyst: **DM**
Acenaphthene	1.2	0.36		mg/Kg-dry	1	10/2/2013
Acenaphthylene	ND	0.36		mg/Kg-dry	1	10/2/2013
Anthracene	2.7	0.36		mg/Kg-dry	1	10/2/2013
Benz(a)anthracene	12	0.36		mg/Kg-dry	1	10/2/2013
Benzo(a)pyrene	11	0.36		mg/Kg-dry	1	10/2/2013
Benzo(b)fluoranthene	13	0.36		mg/Kg-dry	1	10/2/2013
Benzo(g,h,i)perylene	7.2	0.36		mg/Kg-dry	1	10/2/2013
Benzo(k)fluoranthene	9.3	0.36		mg/Kg-dry	1	10/2/2013
Chrysene	14	0.36		mg/Kg-dry	1	10/2/2013
Dibenz(a,h)anthracene	3.9	0.36		mg/Kg-dry	1	10/2/2013
Fluoranthene	28	0.36		mg/Kg-dry	1	10/2/2013
Fluorene	0.94	0.36		mg/Kg-dry	1	10/2/2013
Indeno(1,2,3-cd)pyrene	6.8	0.36		mg/Kg-dry	1	10/2/2013
Naphthalene	ND	0.36		mg/Kg-dry	1	10/2/2013
Phenanthrene	14	0.36		mg/Kg-dry	1	10/2/2013
Pyrene	22	0.36		mg/Kg-dry	1	10/2/2013
Percent Moisture	**D2974**			Prep Date: **9/30/2013**		Analyst: **SDA**
Percent Moisture	9.2	0.2	*	wt%	1	9/30/2013

Qualifiers:
ND - Not Detected at the Reporting Limit
J - Analyte detected below quantitation limits
B - Analyte detected in the associated Method Blank
HT - Sample received past holding time
* - Non-accredited parameter
RL - Reporting / Quantitation Limit for the analysis
S - Spike Recovery outside accepted recovery limits
R - RPD outside accepted recovery limits
E - Value above quantitation range
H - Holding time exceeded

STAT Analysis Corporation
2242 West Harrison St., Suite 200, Chicago, IL 60612-3766
Tel: (312) 733-0551 Fax: (312) 733-2386 STATinfo@STATAnalysis.com
Accreditation Numbers: IEPA ELAP 100445; ORELAP IL300001; AIHA 101160; NVLAP LabCode 101202

Date Reported: October 17, 2013
Date Printed: October 17, 2013

Client: Terracon Consultants, Inc.
Lab Order: 13090931
Project: A2137008, 650 W 83rd St. Phase II, Chicago, IL
Lab ID: 13090931-024

Client Sample ID: B-128 (1-3)
Collection Date 9/27/2013 10:45:00 AM
Matrix: Soil

Analyses	Result	RL	Qualifier	Units	DF	Date Analyzed
Polynuclear Aromatic Hydrocarbons by GC/MS SW8270C (SW3550B)				Prep Date: **10/1/2013**		Analyst: **DM**
Acenaphthene	0.26	0.039		mg/Kg-dry	1	10/2/2013
Acenaphthylene	0.13	0.039		mg/Kg-dry	1	10/2/2013
Anthracene	1.2	0.039		mg/Kg-dry	1	10/2/2013
Benz(a)anthracene	3.7	0.039		mg/Kg-dry	1	10/2/2013
Benzo(a)pyrene	3.5	0.039		mg/Kg-dry	1	10/2/2013
Benzo(b)fluoranthene	3.1	0.039		mg/Kg-dry	1	10/2/2013
Benzo(g,h,i)perylene	2.4	0.039		mg/Kg-dry	1	10/2/2013
Benzo(k)fluoranthene	3.1	0.039		mg/Kg-dry	1	10/2/2013
Chrysene	3.9	0.039		mg/Kg-dry	1	10/2/2013
Dibenz(a,h)anthracene	1.3	0.039		mg/Kg-dry	1	10/2/2013
Fluoranthene	7.1	0.2		mg/Kg-dry	5	10/3/2013
Fluorene	0.34	0.039		mg/Kg-dry	1	10/2/2013
Indeno(1,2,3-cd)pyrene	2.2	0.039		mg/Kg-dry	1	10/2/2013
Naphthalene	0.13	0.039		mg/Kg-dry	1	10/2/2013
Phenanthrene	4.6	0.039		mg/Kg-dry	1	10/2/2013
Pyrene	5.8	0.2		mg/Kg-dry	5	10/3/2013
Percent Moisture	**D2974**			Prep Date: **9/30/2013**		Analyst: **SDA**
Percent Moisture	16.6	0.2	*	wt%	1	9/30/2013

Qualifiers:

ND - Not Detected at the Reporting Limit
J - Analyte detected below quantitation limits
B - Analyte detected in the associated Method Blank
HT - Sample received past holding time
* - Non-accredited parameter
RL - Reporting / Quantitation Limit for the analysis
S - Spike Recovery outside accepted recovery limits
R - RPD outside accepted recovery limits
E - Value above quantitation range
H - Holding time exceeded

STAT Analysis Corporation
2242 West Harrison St., Suite 200, Chicago, IL 60612-3766
Tel: (312) 733-0551 Fax: (312) 733-2386 STATinfo@STATAnalysis.com
Accreditation Numbers: IEPA ELAP 100445; ORELAP IL300001; AIHA 101160; NVLAP LabCode 101202

Date Reported: October 17, 2013
Date Printed: October 17, 2013

Client: Terracon Consultants, Inc.
Lab Order: 13090931
Project: A2137008, 650 W 83rd St. Phase II, Chicago, IL
Lab ID: 13090931-025

Client Sample ID: B-129 (1-3)
Collection Date 9/27/2013 10:52:00 AM
Matrix: Soil

Analyses	Result	RL	Qualifier	Units	DF	Date Analyzed
Polynuclear Aromatic Hydrocarbons by GC/MS	**SW8270C (SW3550B)**			Prep Date: **10/1/2013**		Analyst: **DM**
Acenaphthene	0.14	0.041		mg/Kg-dry	1	10/2/2013
Acenaphthylene	0.062	0.041		mg/Kg-dry	1	10/2/2013
Anthracene	0.52	0.041		mg/Kg-dry	1	10/2/2013
Benz(a)anthracene	2.2	0.041		mg/Kg-dry	1	10/2/2013
Benzo(a)pyrene	2.3	0.041		mg/Kg-dry	1	10/2/2013
Benzo(b)fluoranthene	2.4	0.041		mg/Kg-dry	1	10/2/2013
Benzo(g,h,i)perylene	1.6	0.041		mg/Kg-dry	1	10/2/2013
Benzo(k)fluoranthene	1.8	0.041		mg/Kg-dry	1	10/2/2013
Chrysene	2.4	0.041		mg/Kg-dry	1	10/2/2013
Dibenz(a,h)anthracene	0.79	0.041		mg/Kg-dry	1	10/2/2013
Fluoranthene	4.1	0.041		mg/Kg-dry	1	10/2/2013
Fluorene	0.14	0.041		mg/Kg-dry	1	10/2/2013
Indeno(1,2,3-cd)pyrene	1.5	0.041		mg/Kg-dry	1	10/2/2013
Naphthalene	ND	0.041		mg/Kg-dry	1	10/2/2013
Phenanthrene	1.9	0.041		mg/Kg-dry	1	10/2/2013
Pyrene	3.7	0.041		mg/Kg-dry	1	10/2/2013
Percent Moisture	**D2974**			Prep Date: **9/30/2013**		Analyst: **SDA**
Percent Moisture	20.0	0.2	*	wt%	1	9/30/2013

Qualifiers:
ND - Not Detected at the Reporting Limit
J - Analyte detected below quantitation limits
B - Analyte detected in the associated Method Blank
HT - Sample received past holding time
* - Non-accredited parameter
RL - Reporting / Quantitation Limit for the analysis
S - Spike Recovery outside accepted recovery limits
R - RPD outside accepted recovery limits
E - Value above quantitation range
H - Holding time exceeded

STAT Analysis Corporation
2242 West Harrison St., Suite 200, Chicago, IL 60612-3766
Tel: (312) 733-0551 Fax: (312) 733-2386 STATinfo@STATAnalysis.com
Accreditation Numbers: IEPA ELAP 100445; ORELAP IL300001; AIHA 101160; NVLAP LabCode 101202

Date Reported: October 17, 2013
Date Printed: October 17, 2013

Client: Terracon Consultants, Inc.
Lab Order: 13090931
Project: A2137008, 650 W 83rd St. Phase II, Chicago, IL
Lab ID: 13090931-026

Client Sample ID: B-130 (1-3)
Collection Date 9/27/2013 10:00:00 AM
Matrix: Soil

Analyses	Result	RL	Qualifier	Units	DF	Date Analyzed
Polynuclear Aromatic Hydrocarbons by GC/MS	**SW8270C (SW3550B)**			Prep Date: **10/1/2013**		Analyst: **DM**
Acenaphthene	1.1	0.048		mg/Kg-dry	1	10/2/2013
Acenaphthylene	0.78	0.048		mg/Kg-dry	1	10/2/2013
Anthracene	5.3	0.048		mg/Kg-dry	1	10/2/2013
Benz(a)anthracene	14	0.48		mg/Kg-dry	10	10/3/2013
Benzo(a)pyrene	12	0.48		mg/Kg-dry	10	10/3/2013
Benzo(b)fluoranthene	9.4	0.48		mg/Kg-dry	10	10/3/2013
Benzo(g,h,i)perylene	7.2	0.48		mg/Kg-dry	10	10/3/2013
Benzo(k)fluoranthene	9.5	0.48		mg/Kg-dry	10	10/3/2013
Chrysene	15	0.48		mg/Kg-dry	10	10/3/2013
Dibenz(a,h)anthracene	3.6	0.048		mg/Kg-dry	1	10/2/2013
Fluoranthene	29	0.48		mg/Kg-dry	10	10/3/2013
Fluorene	1.5	0.048		mg/Kg-dry	1	10/2/2013
Indeno(1,2,3-cd)pyrene	6.5	0.48		mg/Kg-dry	10	10/3/2013
Naphthalene	0.24	0.048		mg/Kg-dry	1	10/2/2013
Phenanthrene	19	0.48		mg/Kg-dry	10	10/3/2013
Pyrene	30	0.48		mg/Kg-dry	10	10/3/2013
Percent Moisture	**D2974**			Prep Date: **9/30/2013**		Analyst: **SDA**
Percent Moisture	31.8	0.2	*	wt%	1	9/30/2013

Qualifiers:
ND - Not Detected at the Reporting Limit
J - Analyte detected below quantitation limits
B - Analyte detected in the associated Method Blank
HT - Sample received past holding time
* - Non-accredited parameter
RL - Reporting / Quantitation Limit for the analysis
S - Spike Recovery outside accepted recovery limits
R - RPD outside accepted recovery limits
E - Value above quantitation range
H - Holding time exceeded

STAT Analysis Corporation
2242 West Harrison St., Suite 200, Chicago, IL 60612-3766
Tel: (312) 733-0551 Fax: (312) 733-2386 STATinfo@STATAnalysis.com
Accreditation Numbers: IEPA ELAP 100445; ORELAP IL300001; AIHA 101160; NVLAP LabCode 101202

Date Reported: October 17, 2013
Date Printed: October 17, 2013

Client: Terracon Consultants, Inc.
Lab Order: 13090931
Project: A2137008, 650 W 83rd St. Phase II, Chicago, IL
Lab ID: 13090931-027

Client Sample ID: B-130 (4-6)
Collection Date 9/27/2013 10:02:00 AM
Matrix: Soil

Analyses	Result	RL	Qualifier	Units	DF	Date Analyzed
Polynuclear Aromatic Hydrocarbons by GC/MS	**SW8270C (SW3550B)**			Prep Date: **10/1/2013**		Analyst: **DM**
Acenaphthene	ND	0.041		mg/Kg-dry	1	10/2/2013
Acenaphthylene	ND	0.041		mg/Kg-dry	1	10/2/2013
Anthracene	0.23	0.041		mg/Kg-dry	1	10/2/2013
Benz(a)anthracene	0.94	0.041		mg/Kg-dry	1	10/2/2013
Benzo(a)pyrene	0.91	0.041		mg/Kg-dry	1	10/2/2013
Benzo(b)fluoranthene	0.51	0.041		mg/Kg-dry	1	10/2/2013
Benzo(g,h,i)perylene	0.46	0.041		mg/Kg-dry	1	10/2/2013
Benzo(k)fluoranthene	0.56	0.041		mg/Kg-dry	1	10/2/2013
Chrysene	0.84	0.041		mg/Kg-dry	1	10/2/2013
Dibenz(a,h)anthracene	0.21	0.041		mg/Kg-dry	1	10/2/2013
Fluoranthene	1.4	0.041		mg/Kg-dry	1	10/2/2013
Fluorene	ND	0.041		mg/Kg-dry	1	10/2/2013
Indeno(1,2,3-cd)pyrene	0.32	0.041		mg/Kg-dry	1	10/2/2013
Naphthalene	ND	0.041		mg/Kg-dry	1	10/2/2013
Phenanthrene	0.21	0.041		mg/Kg-dry	1	10/2/2013
Pyrene	2.5	0.041		mg/Kg-dry	1	10/2/2013
Percent Moisture	**D2974**			Prep Date: **9/30/2013**		Analyst: **SDA**
Percent Moisture	20.1	0.2	*	wt%	1	9/30/2013

Qualifiers:
ND - Not Detected at the Reporting Limit
J - Analyte detected below quantitation limits
B - Analyte detected in the associated Method Blank
HT - Sample received past holding time
* - Non-accredited parameter
RL - Reporting / Quantitation Limit for the analysis
S - Spike Recovery outside accepted recovery limits
R - RPD outside accepted recovery limits
E - Value above quantitation range
H - Holding time exceeded

STAT Analysis Corporation
2242 West Harrison St., Suite 200, Chicago, IL 60612-3766
Tel: (312) 733-0551 Fax: (312) 733-2386 STATinfo@STATAnalysis.com
Accreditation Numbers: IEPA ELAP 100445; ORELAP IL300001; AIHA 101160; NVLAP LabCode 101202

Date Reported: October 17, 2013
Date Printed: October 17, 2013

Client: Terracon Consultants, Inc.
Lab Order: 13090931
Project: A2137008, 650 W 83rd St. Phase II, Chicago, IL
Lab ID: 13090931-028

Client Sample ID: B-131 (1-3)
Collection Date 9/27/2013 9:51:00 AM
Matrix: Soil

Analyses	Result	RL	Qualifier	Units	DF	Date Analyzed
Polynuclear Aromatic Hydrocarbons by GC/MS	**SW8270C (SW3550B)**			Prep Date: **10/1/2013**		Analyst: **DM**
Acenaphthene	1.1	0.046		mg/Kg-dry	1	10/2/2013
Acenaphthylene	1.2	0.046		mg/Kg-dry	1	10/2/2013
Anthracene	4.9	0.046		mg/Kg-dry	1	10/2/2013
Benz(a)anthracene	14	0.46		mg/Kg-dry	10	10/3/2013
Benzo(a)pyrene	12	0.46		mg/Kg-dry	10	10/3/2013
Benzo(b)fluoranthene	8	0.46		mg/Kg-dry	10	10/3/2013
Benzo(g,h,i)perylene	7.4	0.46		mg/Kg-dry	10	10/3/2013
Benzo(k)fluoranthene	9.2	0.46		mg/Kg-dry	10	10/3/2013
Chrysene	15	0.46		mg/Kg-dry	10	10/3/2013
Dibenz(a,h)anthracene	3.5	0.046		mg/Kg-dry	1	10/2/2013
Fluoranthene	26	0.46		mg/Kg-dry	10	10/3/2013
Fluorene	1.8	0.046		mg/Kg-dry	1	10/2/2013
Indeno(1,2,3-cd)pyrene	6.2	0.46		mg/Kg-dry	10	10/3/2013
Naphthalene	0.26	0.046		mg/Kg-dry	1	10/2/2013
Phenanthrene	22	0.46		mg/Kg-dry	10	10/3/2013
Pyrene	33	0.46		mg/Kg-dry	10	10/3/2013
Percent Moisture	**D2974**			Prep Date: **9/30/2013**		Analyst: **SDA**
Percent Moisture	28.5	0.2	*	wt%	1	9/30/2013

Qualifiers:
ND - Not Detected at the Reporting Limit
J - Analyte detected below quantitation limits
B - Analyte detected in the associated Method Blank
HT - Sample received past holding time
* - Non-accredited parameter
RL - Reporting / Quantitation Limit for the analysis
S - Spike Recovery outside accepted recovery limits
R - RPD outside accepted recovery limits
E - Value above quantitation range
H - Holding time exceeded

STAT Analysis Corporation
2242 West Harrison St., Suite 200, Chicago, IL 60612-3766
Tel: (312) 733-0551 Fax: (312) 733-2386 STATinfo@STATAnalysis.com
Accreditation Numbers: IEPA ELAP 100445; ORELAP IL300001; AIHA 101160; NVLAP LabCode 101202

Date Reported: October 17, 2013
Date Printed: October 17, 2013

Client: Terracon Consultants, Inc.
Lab Order: 13090931
Project: A2137008, 650 W 83rd St. Phase II, Chicago, IL
Lab ID: 13090931-029

Client Sample ID: B-131 (4-6)
Collection Date 9/27/2013 9:54:00 AM
Matrix: Soil

Analyses	Result	RL	Qualifier	Units	DF	Date Analyzed
Polynuclear Aromatic Hydrocarbons by GC/MS SW8270C (SW3550B)				Prep Date: **10/1/2013**		Analyst: **DM**
Acenaphthene	0.078	0.048		mg/Kg-dry	1	10/2/2013
Acenaphthylene	0.11	0.048		mg/Kg-dry	1	10/2/2013
Anthracene	0.4	0.048		mg/Kg-dry	1	10/2/2013
Benz(a)anthracene	1.1	0.048		mg/Kg-dry	1	10/2/2013
Benzo(a)pyrene	1.2	0.048		mg/Kg-dry	1	10/2/2013
Benzo(b)fluoranthene	1	0.048		mg/Kg-dry	1	10/2/2013
Benzo(g,h,i)perylene	0.77	0.048		mg/Kg-dry	1	10/2/2013
Benzo(k)fluoranthene	1	0.048		mg/Kg-dry	1	10/2/2013
Chrysene	1.1	0.048		mg/Kg-dry	1	10/2/2013
Dibenz(a,h)anthracene	0.39	0.048		mg/Kg-dry	1	10/2/2013
Fluoranthene	2.3	0.048		mg/Kg-dry	1	10/2/2013
Fluorene	0.19	0.048		mg/Kg-dry	1	10/2/2013
Indeno(1,2,3-cd)pyrene	0.67	0.048		mg/Kg-dry	1	10/2/2013
Naphthalene	ND	0.048		mg/Kg-dry	1	10/2/2013
Phenanthrene	1.4	0.048		mg/Kg-dry	1	10/2/2013
Pyrene	2	0.048		mg/Kg-dry	1	10/2/2013
Percent Moisture	**D2974**			Prep Date: **9/30/2013**		Analyst: **SDA**
Percent Moisture	31.4	0.2	*	wt%	1	9/30/2013

Qualifiers:
ND - Not Detected at the Reporting Limit
J - Analyte detected below quantitation limits
B - Analyte detected in the associated Method Blank
HT - Sample received past holding time
* - Non-accredited parameter
RL - Reporting / Quantitation Limit for the analysis
S - Spike Recovery outside accepted recovery limits
R - RPD outside accepted recovery limits
E - Value above quantitation range
H - Holding time exceeded

STAT Analysis Corporation
2242 West Harrison St., Suite 200, Chicago, IL 60612-3766
Tel: (312) 733-0551 Fax: (312) 733-2386 STATinfo@STATAnalysis.com
Accreditation Numbers: IEPA ELAP 100445; ORELAP IL300001; AIHA 101160; NVLAP LabCode 101202

Date Reported: October 17, 2013
Date Printed: October 17, 2013

Client: Terracon Consultants, Inc.
Lab Order: 13090931
Project: A2137008, 650 W 83rd St. Phase II, Chicago, IL
Lab ID: 13090931-030

Client Sample ID: B-132 (1-3)
Collection Date 9/27/2013 10:10:00 AM
Matrix: Soil

Analyses	Result	RL	Qualifier	Units	DF	Date Analyzed
Polynuclear Aromatic Hydrocarbons by GC/MS	**SW8270C (SW3550B)**			Prep Date: **10/1/2013**		Analyst: **DM**
Acenaphthene	1	0.042		mg/Kg-dry	1	10/2/2013
Acenaphthylene	0.51	0.042		mg/Kg-dry	1	10/2/2013
Anthracene	3.8	0.042		mg/Kg-dry	1	10/2/2013
Benz(a)anthracene	11	0.42		mg/Kg-dry	10	10/3/2013
Benzo(a)pyrene	9.7	0.42		mg/Kg-dry	10	10/3/2013
Benzo(b)fluoranthene	7.8	0.42		mg/Kg-dry	10	10/3/2013
Benzo(g,h,i)perylene	6.1	0.42		mg/Kg-dry	10	10/3/2013
Benzo(k)fluoranthene	7.5	0.42		mg/Kg-dry	10	10/3/2013
Chrysene	12	0.42		mg/Kg-dry	10	10/3/2013
Dibenz(a,h)anthracene	3.3	0.042		mg/Kg-dry	1	10/2/2013
Fluoranthene	22	0.42		mg/Kg-dry	10	10/3/2013
Fluorene	1.2	0.042		mg/Kg-dry	1	10/2/2013
Indeno(1,2,3-cd)pyrene	5.5	0.42		mg/Kg-dry	10	10/3/2013
Naphthalene	0.62	0.042		mg/Kg-dry	1	10/2/2013
Phenanthrene	12	0.42		mg/Kg-dry	10	10/3/2013
Pyrene	21	0.42		mg/Kg-dry	10	10/3/2013
Percent Moisture	**D2974**			Prep Date: **9/30/2013**		Analyst: **SDA**
Percent Moisture	21.2	0.2	*	wt%	1	9/30/2013

Qualifiers:
ND - Not Detected at the Reporting Limit
J - Analyte detected below quantitation limits
B - Analyte detected in the associated Method Blank
HT - Sample received past holding time
* - Non-accredited parameter
RL - Reporting / Quantitation Limit for the analysis
S - Spike Recovery outside accepted recovery limits
R - RPD outside accepted recovery limits
E - Value above quantitation range
H - Holding time exceeded

STAT Analysis Corporation
2242 West Harrison St., Suite 200, Chicago, IL 60612-3766
Tel: (312) 733-0551 Fax: (312) 733-2386 STATinfo@STATAnalysis.com
Accreditation Numbers: IEPA ELAP 100445; ORELAP IL300001; AIHA 101160; NVLAP LabCode 101202

Date Reported: October 17, 2013
Date Printed: October 17, 2013

Client: Terracon Consultants, Inc.
Lab Order: 13090931
Project: A2137008, 650 W 83rd St. Phase II, Chicago, IL
Lab ID: 13090931-031

Client Sample ID: B-132 (4-6)
Collection Date 9/27/2013 10:12:00 AM
Matrix: Soil

Analyses	Result	RL	Qualifier	Units	DF	Date Analyzed
Polynuclear Aromatic Hydrocarbons by GC/MS SW8270C (SW3550B)				Prep Date: **10/1/2013**		Analyst: **DM**
Acenaphthene	0.29	0.04		mg/Kg-dry	1	10/2/2013
Acenaphthylene	0.15	0.04		mg/Kg-dry	1	10/2/2013
Anthracene	0.97	0.04		mg/Kg-dry	1	10/2/2013
Benz(a)anthracene	3.6	0.04		mg/Kg-dry	1	10/2/2013
Benzo(a)pyrene	3.2	0.04		mg/Kg-dry	1	10/2/2013
Benzo(b)fluoranthene	2.2	0.04		mg/Kg-dry	1	10/2/2013
Benzo(g,h,i)perylene	2	0.04		mg/Kg-dry	1	10/2/2013
Benzo(k)fluoranthene	2.6	0.04		mg/Kg-dry	1	10/2/2013
Chrysene	3.7	0.04		mg/Kg-dry	1	10/2/2013
Dibenz(a,h)anthracene	0.98	0.04		mg/Kg-dry	1	10/2/2013
Fluoranthene	6.1	0.2		mg/Kg-dry	5	10/3/2013
Fluorene	0.35	0.04		mg/Kg-dry	1	10/2/2013
Indeno(1,2,3-cd)pyrene	1.6	0.04		mg/Kg-dry	1	10/2/2013
Naphthalene	0.17	0.04		mg/Kg-dry	1	10/2/2013
Phenanthrene	3.4	0.04		mg/Kg-dry	1	10/2/2013
Pyrene	7.4	0.2		mg/Kg-dry	5	10/3/2013
Percent Moisture D2974				Prep Date: **9/30/2013**		Analyst: **SDA**
Percent Moisture	17.7	0.2	*	wt%	1	9/30/2013

Qualifiers:
ND - Not Detected at the Reporting Limit
J - Analyte detected below quantitation limits
B - Analyte detected in the associated Method Blank
HT - Sample received past holding time
* - Non-accredited parameter
RL - Reporting / Quantitation Limit for the analysis
S - Spike Recovery outside accepted recovery limits
R - RPD outside accepted recovery limits
E - Value above quantitation range
H - Holding time exceeded

STAT Analysis Corporation
2242 West Harrison St., Suite 200, Chicago, IL 60612-3766
Tel: (312) 733-0551 Fax: (312) 733-2386 STATinfo@STATAnalysis.com
Accreditation Numbers: IEPA ELAP 100445; ORELAP IL300001; AIHA 101160; NVLAP LabCode 101202

Date Reported: October 17, 2013
Date Printed: October 17, 2013

Client: Terracon Consultants, Inc.
Lab Order: 13090931
Project: A2137008, 650 W 83rd St. Phase II, Chicago, IL
Lab ID: 13090931-032

Client Sample ID: B-133 (1-3)
Collection Date 9/27/2013 10:15:00 AM
Matrix: Soil

Analyses	Result	RL	Qualifier	Units	DF	Date Analyzed
Polynuclear Aromatic Hydrocarbons by GC/MS	**SW8270C (SW3550B)**			Prep Date: **10/1/2013**		Analyst: **DM**
Acenaphthene	6.2	0.39		mg/Kg-dry	1	10/2/2013
Acenaphthylene	4.2	0.39		mg/Kg-dry	1	10/2/2013
Anthracene	18	0.39		mg/Kg-dry	1	10/2/2013
Benz(a)anthracene	39	0.39		mg/Kg-dry	1	10/2/2013
Benzo(a)pyrene	36	0.39		mg/Kg-dry	1	10/2/2013
Benzo(b)fluoranthene	30	0.39		mg/Kg-dry	1	10/2/2013
Benzo(g,h,i)perylene	22	0.39		mg/Kg-dry	1	10/2/2013
Benzo(k)fluoranthene	31	0.39		mg/Kg-dry	1	10/2/2013
Chrysene	42	0.39		mg/Kg-dry	1	10/2/2013
Dibenz(a,h)anthracene	12	0.39		mg/Kg-dry	1	10/2/2013
Fluoranthene	86	3.9		mg/Kg-dry	10	10/3/2013
Fluorene	9.7	0.39		mg/Kg-dry	1	10/2/2013
Indeno(1,2,3-cd)pyrene	20	0.39		mg/Kg-dry	1	10/2/2013
Naphthalene	5.4	0.39		mg/Kg-dry	1	10/2/2013
Phenanthrene	79	3.9		mg/Kg-dry	10	10/3/2013
Pyrene	76	3.9		mg/Kg-dry	10	10/3/2013
Percent Moisture	**D2974**			Prep Date: **9/30/2013**		Analyst: **SDA**
Percent Moisture	15.8	0.2	*	wt%	1	9/30/2013

Qualifiers:
ND - Not Detected at the Reporting Limit
J - Analyte detected below quantitation limits
B - Analyte detected in the associated Method Blank
HT - Sample received past holding time
* - Non-accredited parameter
RL - Reporting / Quantitation Limit for the analysis
S - Spike Recovery outside accepted recovery limits
R - RPD outside accepted recovery limits
E - Value above quantitation range
H - Holding time exceeded

STAT Analysis Corporation
2242 West Harrison St., Suite 200, Chicago, IL 60612-3766
Tel: (312) 733-0551 Fax: (312) 733-2386 STATinfo@STATAnalysis.com
Accreditation Numbers: IEPA ELAP 100445; ORELAP IL300001; AIHA 101160; NVLAP LabCode 101202

Date Reported: October 17, 2013
Date Printed: October 17, 2013

Client: Terracon Consultants, Inc.
Lab Order: 13090931
Project: A2137008, 650 W 83rd St. Phase II, Chicago, IL
Lab ID: 13090931-033

Client Sample ID: B-133 (4-6)
Collection Date 9/27/2013 10:17:00 AM
Matrix: Soil

Analyses	Result	RL	Qualifier	Units	DF	Date Analyzed
Polynuclear Aromatic Hydrocarbons by GC/MS SW8270C (SW3550B)				Prep Date: **10/1/2013**		Analyst: **DM**
Acenaphthene	ND	0.05		mg/Kg-dry	1	10/2/2013
Acenaphthylene	ND	0.05		mg/Kg-dry	1	10/2/2013
Anthracene	0.052	0.05		mg/Kg-dry	1	10/2/2013
Benz(a)anthracene	0.12	0.05		mg/Kg-dry	1	10/2/2013
Benzo(a)pyrene	0.12	0.05		mg/Kg-dry	1	10/2/2013
Benzo(b)fluoranthene	0.092	0.05		mg/Kg-dry	1	10/2/2013
Benzo(g,h,i)perylene	0.089	0.05		mg/Kg-dry	1	10/2/2013
Benzo(k)fluoranthene	0.093	0.05		mg/Kg-dry	1	10/2/2013
Chrysene	0.13	0.05		mg/Kg-dry	1	10/2/2013
Dibenz(a,h)anthracene	ND	0.05		mg/Kg-dry	1	10/2/2013
Fluoranthene	0.25	0.05		mg/Kg-dry	1	10/2/2013
Fluorene	ND	0.05		mg/Kg-dry	1	10/2/2013
Indeno(1,2,3-cd)pyrene	0.054	0.05		mg/Kg-dry	1	10/2/2013
Naphthalene	ND	0.05		mg/Kg-dry	1	10/2/2013
Phenanthrene	0.2	0.05		mg/Kg-dry	1	10/2/2013
Pyrene	0.26	0.05		mg/Kg-dry	1	10/2/2013
Percent Moisture	**D2974**			Prep Date: **9/30/2013**		Analyst: **SDA**
Percent Moisture	35.3	0.2	*	wt%	1	9/30/2013

Qualifiers:
ND - Not Detected at the Reporting Limit
J - Analyte detected below quantitation limits
B - Analyte detected in the associated Method Blank
HT - Sample received past holding time
* - Non-accredited parameter
RL - Reporting / Quantitation Limit for the analysis
S - Spike Recovery outside accepted recovery limits
R - RPD outside accepted recovery limits
E - Value above quantitation range
H - Holding time exceeded

STAT Analysis Corporation
2242 W. Harrison Suite 200, Chicago, Illinois 60612 Phone: (312) 733-0551 Fax: (312) 733-2386
e-mail address: STATinfo@STATAnalysis.com AIHA, NVLAP and NELAP accredited

CHAIN OF CUSTODY RECORD

Nº: 852531 Page: 1 of 2

Company: Terracon
Project Number: AZ137008 Client Tracking No.:
Project Name: 650 W 83rd St Phase II
Project Location: Chicago, IL
Sampler(s): Matt Toth
Report To: Richard OBrien Phone: (312) 575 0614
Fax:
e-mail: rmobrien@terracon.com

P.O. No.:
Quote No.:

QC Level: 1 ___ 2 ___ 3 ___ 4 ___

Turn Around: Standard 5-day
Results Needed: / / am/pm

Client Sample Number/Description:	Date Taken	Time Taken	Matrix	Comp.	Grab	Preserv.	No. of Containers	PNAs	BTEX	TPH (DRO + GRO)	TCLP Lead	Total Lead	pH	Elemental Mercury	Remarks	Lab No.:
B-101 (6-8)	9/27/13	8:45	S		X		4	X	X	X						001
B-102 (6-8)		8:57	S		X		4								HOLD	002
B-103 (6-8)		9:25	S		X		4	X	X	X						003
B-104 (6-8)		9:37	S		X		4								HOLD	004
B-105 (6-8)		8:35	S		X		4	X	X	X						005
B-106 (6-8)		8:20	S		X		4								HOLD	006
B-107 (6-8)		9:11	S		X		4	X	X	X						007
B-116 (6-8)		12:20	S		X		1				X					008
B-117 (6-8)		12:15	S		X		1								HOLD	009
B-118 (6-8)		12:27	S		X		1				X					010
B-114 (1-3)		11:00	S		X		1					X	X			011
B-119 (6-8)		11:04	S		X		1								HOLD	012
B-120 (6-8)		12:35	S		X		1				X					013
B-121 (6-8)		12:45	S		X		1								HOLD	014
B-176 (4-6)		11:35	S		X		1							X		015
B-124 (1-3)		11:20	S		X		1	X								016
B-124 (4-6)		11:22	S		X		1	X								017
B-125 (1-3)		11:10	S		X		1	X								018
B-125 (4-6)	↓	11:12	S		X		1	X								019

Relinquished by: (Signature)	Matthew Toth	Date/Time: 9/27/13 13:50
Received by: (Signature)		Date/Time: 9/27/13 13:50
Relinquished by: (Signature)		Date/Time:
Received by: (Signature)		Date/Time:
Relinquished by: (Signature)		Date/Time:
Received by: (Signature)		Date/Time:

Comments:

Laboratory Work Order No.: 1309093

Received on Ice: Yes ☑ No ☐

Temperature: 7.8 °C

Preservation Code: A = None B = HNO_3 C = NaOH
D = H_2SO_4 E = HCl F = 5035/EnCore G = Other

STAT Analysis Corporation
2242 W. Harrison, Suite 200, Chicago, Illinois 60612 Phone: (312) 733-0551 Fax: (312) 733-2386
e-mail address: STATinfo@STATAnalysis.com AIHA, NVLAP and NELAP accredited

CHAIN OF CUSTODY RECORD

Nº: 844941 Page: 2 of 2

Company: Terracon
Project Number: A213 7008 Client Tracking No.:
Project Name: 650 W 83rd St Phase II
Project Location: Chicago, IL
Sampler(s): Matt Toth
Report To: Richard O'Brien Phone: (312) 575 0014
Fax:
QC Level: 1 2 3 4 e-mail: rmobrien@terracon.com

P.O. No.:
Quote No.:

Turn Around: Standard 5-day
Results Needed: / / um/pm

Client Sample Number/Description:	Date Taken	Time Taken	Matrix	Comp	Grab	Preserv.	No. of Containers	PNAs	BTEX	TPH (DRO + GRO)	TCLP Lead	Remarks	Lab No.:
B-126 (1-3)	9/27/13	12:00	S		X		1	X					020
B-126 (4-6)		12:05	S		X		1	X					021
B-26b (1-3)		10:30	S		X		1		X				022
B-127 (1-3)		10:37	S		X		1	X					023
B-128 (1-3)		10:45	S		X		1	X					024
B-129 (1-3)		10:52	S		X		1	X					025
B-130 (1-3)		10:00	S		X		1	X					026
B-130 (4-6)		10:02	S		X		1	X					027
B-131 (1-3)		9:51	S		X		1	X					028
~~B-131 (4-6)~~ B-131(4-6)		9:54	S		X		1	X					029
B-132 (1-3)		10:10	S		X		1	X					030
B-132 (4-6)		10:12	S		X		1	X					031
B-133 (1-3)		10:15	S		X		1	X					032
B-133 (4-6)	↓	10:17	S		X		1	X					033

Relinquished by: (Signature) Matthew Toth Date/Time: 9/27/13 13:50
Received by: (Signature) Date/Time: 9/27/13 13:50
Relinquished by: (Signature) Date/Time:
Received by: (Signature) Date/Time:
Relinquished by: (Signature) Date/Time:
Received by: (Signature) Date/Time:

Comments:

Laboratory Work Order No.: 1309031

Received on Ice: Yes ☑ No ☐
Temperature: 7-8 °C

Preservation Code: A = None B = HNO_3 C = NaOH
D = H_2SO_4 E = HCl F = 5035/EnCore G = Other

STAT Analysis Corporation

Sample Receipt Checklist

Client Name TERRACON - CHICAGO | Date and Time Received: 9/27/2013 1:50:00 PM

Work Order Number 13090931 | Received by: DO

Checklist completed by: _____ 9/27/13 (Signature / Date) | Reviewed by: _____ 9/30/13 (Initials / Date)

Matrix: | Carrier name | Client Delivered

Shipping container/cooler in good condition?	Yes ☑	No ☐	Not Present ☐
Custody seals intact on shippping container/cooler?	Yes ☐	No ☐	Not Present ☑
Custody seals intact on sample bottles?	Yes ☐	No ☐	Not Present ☑
Chain of custody present?	Yes ☑	No ☐	
Chain of custody signed when relinquished and received?	Yes ☑	No ☐	
Chain of custody agrees with sample labels/containers?	Yes ☑	No ☐	
Samples in proper container/bottle?	Yes ☑	No ☐	
Sample containers intact?	Yes ☑	No ☐	
Sufficient sample volume for indicated test?	Yes ☑	No ☐	
All samples received within holding time?	Yes ☑	No ☐	
Container or Temp Blank temperature in compliance?	Yes ☑	No ☐	Temperature 7.8 °C
Water - VOA vials have zero headspace?	No VOA vials submitted ☐	Yes ☐	No ☐
Water - Samples pH checked?	Yes ☐	No ☐	Checked by: _____
Water - Samples properly preserved?	Yes ☐	No ☐	pH Adjusted? _____

Any No response must be detailed in the comments section below.

Comments: _____

Client / Person contacted: _____ Date contacted: _____ Contacted by: _____

Response: _____

Frank Capoccia

From: O'Brien, Richard M [rmobrien@terracon.com]
Sent: Tuesday, October 08, 2013 4:17 PM
To: Frank Capoccia
Subject: TOR 00005 - Additional Lab Analyssis Request

Hi Frank,

For the 650 W 83rd Job with samples submitted last week of June 2013, and September 26-27, we would like to do the following analysis on the following samples on standard turnaround:

B104(6-8) – PNAs
B106(6-8) – TCLP Lead
B119(6-8) – Total Lead, pH

B1(4-6) – TCLP Lead
B5(4-6) – TCLP Lead
B12(4-6) – TCLP Lead

(STAT job numbers may include: 13090931, 13090865, 13061017, 13060993, 13060930, 13060872.)

Thanks,

Richard O'Brien, P.E.
Senior Project Engineer
Environmental Services

Terracon Consultants, Inc.
650 West Lake Street, Suite 420 I Chicago, IL 60661
P [312] 575-0014 I F [312] 575-0111 I C [312] 443-2958
rmobrien@terracon.com I terracon.com

Terracon provides environmental, facilities, geotechnical, and materials consulting engineering services delivered with responsiveness, resourcefulness, and reliability.

Private and confidential as detailed here (www.terracon.com/disclaimer). If you cannot access hyperlink, please e-mail sender.

STAT Analysis Corporation
2242 West Harrison St., Suite 200, Chicago, IL 60612-3766
Tel: (312) 733-0551 Fax: (312) 733-2386 STATinfo@STATAnalysis.com
Accreditation Numbers: IEPA ELAP 100445; ORELAP IL300001;AIHA 101160; NVLAP LabCode 101202-

September 30, 2013

Terracon Consultants, Inc.
135 Ambassador Drive
Naperville, IL 60540
Telephone: (630) 717-4263
Fax: (630) 357-9489

RE: A2137008, 650 West 83rd Street, Chicago IL STAT Project No: 13060930

Dear Richard O'Brien:

STAT Analysis received 24 samples for the referenced project on 6/26/2013 5:00:00 PM. The analytical results are presented in the following report.

This report is revised to reflect additional analysis requested after the initial report was issued.

All analyses were performed in accordance with the requirements of 35 IAC Part 186 / NELAC standards. Analyses were performed in accordance with methods as referenced on the analytical report. Those analytical results expressed on a dry weight basis are also noted on the analytical report.

All analyses were performed within established holding time criteria, and all Quality Control criteria met EPA or laboratory specifications except when noted in the Case Narrative or Analytical Report. If required, an estimate of uncertainty for the analyses can be provided. A listing of accredited methods/parameters can also be provided.

Thank you for the opportunity to serve you and I look forward to working with you in the future. If you have any questions regarding the enclosed materials, please contact me at (312) 733-0551.

Sincerely,

Frank Capoccia
Project Manager

The information contained in this report and any attachments is confidential information intended only for the use of the individual or entities named above. The results of this report relate only to the samples tested. If you have received this report in error, please notify us immediately by phone. This report shall not be reproduced, except in its entirety, unless written approval has been obtained from the laboratory. This analytical report shall become property of the Customer upon payment in full. Otherwise, STAT will be under no obligation to support, defend or discuss the analytical report.

Client: Terracon Consultants, Inc.
Project: A2137008, 650 West 83rd Street, Chicago IL
Lab Order: 13060930

Work Order Sample Summary

Lab Sample ID	Client Sample ID	Tag Number	Collection Date	Date Received
13060930-001A	B8 (1-3)		6/26/2013 4:00:00 PM	6/26/2013
13060930-001B	B8 (1-3)		6/26/2013 4:00:00 PM	6/26/2013
13060930-002A	B8 (4-6)		6/26/2013 4:20:00 PM	6/26/2013
13060930-002B	B8 (4-6)		6/26/2013 4:20:00 PM	6/26/2013
13060930-003A	B9 (1-3)		6/26/2013 3:50:00 PM	6/26/2013
13060930-003B	B9 (1-3)		6/26/2013 3:50:00 PM	6/26/2013
13060930-004A	B9 (4-6)		6/26/2013 3:45:00 PM	6/26/2013
13060930-004B	B9 (4-6)		6/26/2013 3:45:00 PM	6/26/2013
13060930-005A	B17 (1-3)		6/26/2013 3:10:00 PM	6/26/2013
13060930-005B	B17 (1-3)		6/26/2013 3:10:00 PM	6/26/2013
13060930-006A	B17 (4-6)		6/26/2013 3:20:00 PM	6/26/2013
13060930-006B	B17 (4-6)		6/26/2013 3:20:00 PM	6/26/2013
13060930-007A	B26 (1-3)		6/26/2013 2:30:00 PM	6/26/2013
13060930-007B	B26 (1-3)		6/26/2013 2:30:00 PM	6/26/2013
13060930-008A	B26 (6-8)		6/26/2013 2:55:00 PM	6/26/2013
13060930-008B	B26 (6-8)		6/26/2013 2:55:00 PM	6/26/2013
13060930-009A	B18 (1-3)		6/26/2013 1:20:00 PM	6/26/2013
13060930-009B	B18 (1-3)		6/26/2013 1:20:00 PM	6/26/2013
13060930-010A	B18 (4-6)		6/26/2013 1:35:00 PM	6/26/2013
13060930-010B	B18 (4-6)		6/26/2013 1:35:00 PM	6/26/2013
13060930-011A	B25 (1-3)		6/26/2013 12:40:00 PM	6/26/2013
13060930-011B	B25 (1-3)		6/26/2013 12:40:00 PM	6/26/2013
13060930-012A	B25 (4-6)		6/26/2013 1:00:00 PM	6/26/2013
13060930-012B	B25 (4-6)		6/26/2013 1:00:00 PM	6/26/2013
13060930-013A	B33 (1-3)		6/26/2013 12:00:00 PM	6/26/2013
13060930-013B	B33 (1-3)		6/26/2013 12:00:00 PM	6/26/2013
13060930-014A	B33 (4-6)		6/26/2013 12:30:00 PM	6/26/2013
13060930-014B	B33 (4-6)		6/26/2013 12:30:00 PM	6/26/2013
13060930-015A	B32 (1-3)		6/26/2013 11:30:00 AM	6/26/2013
13060930-015B	B32 (1-3)		6/26/2013 11:30:00 AM	6/26/2013
13060930-016A	B32 (6-8)		6/26/2013 11:50:00 AM	6/26/2013
13060930-016B	B32 (6-8)		6/26/2013 11:50:00 AM	6/26/2013
13060930-017A	B35 (1-3)		6/26/2013 10:30:00 AM	6/26/2013
13060930-017B	B35 (1-3)		6/26/2013 10:30:00 AM	6/26/2013
13060930-018A	B35 (4-6)		6/26/2013 10:40:00 AM	6/26/2013
13060930-018B	B35 (4-6)		6/26/2013 10:40:00 AM	6/26/2013
13060930-019A	B27 (1-3)		6/26/2013 9:30:00 AM	6/26/2013
13060930-019B	B27 (1-3)		6/26/2013 9:30:00 AM	6/26/2013

Client:	Terracon Consultants, Inc.	
Project:	A2137008, 650 West 83rd Street, Chicago IL	**Work Order Sample Summary**
Lab Order:	13060930	

Lab Sample ID	Client Sample ID	Tag Number	Collection Date	Date Received
13060930-020A	B27 (6-8)		6/26/2013 9:40:00 AM	6/26/2013
13060930-020B	B27 (6-8)		6/26/2013 9:40:00 AM	6/26/2013
13060930-021A	B36 (1-3)		6/26/2013 10:00:00 AM	6/26/2013
13060930-021B	B36 (1-3)		6/26/2013 10:00:00 AM	6/26/2013
13060930-022A	B36 (4-6)		6/26/2013 10:20:00 AM	6/26/2013
13060930-022B	B36 (4-6)		6/26/2013 10:20:00 AM	6/26/2013
13060930-023A	B19 (1-3)		6/26/2013 2:00:00 PM	6/26/2013
13060930-023B	B19 (1-3)		6/26/2013 2:00:00 PM	6/26/2013
13060930-024A	B19 (4-6)		6/26/2013 2:20:00 PM	6/26/2013
13060930-024B	B19 (4-6)		6/26/2013 2:20:00 PM	6/26/2013

STAT Analysis Corporation
2242 West Harrison St., Suite 200, Chicago, IL 60612-3766
Tel: (312) 733-0551 Fax: (312) 733-2386 STATinfo@STATAnalysis.com
Accreditation Numbers: IEPA ELAP 100445; ORELAP IL300001; AIHA 101160; NVLAP LabCode 101202

Date Reported: September 30, 2013
Date Printed: September 30, 2013

Client: Terracon Consultants, Inc.
Lab Order: 13060930
Project: A2137008, 650 West 83rd Street, Chicago IL
Lab ID: 13060930-001

Client Sample ID: B8 (1-3)
Collection Date 6/26/2013 4:00:00 PM
Matrix: Soil

Analyses	Result	RL	Qualifier	Units	DF	Date Analyzed
Mercury	**SW7471A**			Prep Date: **7/3/2013**		Analyst: **LB**
Mercury	ND	0.023		mg/Kg-dry	1	7/3/2013
Metals by ICP/MS	**SW6020 (SW3050B)**			Prep Date: **7/1/2013**		Analyst: **JG**
Arsenic	4.8	1.2		mg/Kg-dry	10	7/2/2013
Barium	120	1.2		mg/Kg-dry	10	7/2/2013
Cadmium	ND	0.61		mg/Kg-dry	10	7/2/2013
Chromium	13	1.2		mg/Kg-dry	10	7/2/2013
Lead	130	0.61		mg/Kg-dry	10	7/2/2013
Selenium	ND	1.2		mg/Kg-dry	10	7/2/2013
Silver	ND	1.2		mg/Kg-dry	10	7/2/2013
Semivolatile Organic Compounds by GC/MS	**SW8270C (SW3550B)**			Prep Date: **6/27/2013**		Analyst: **DM**
Acenaphthene	8.8	0.39		mg/Kg-dry	1	6/29/2013
Acenaphthylene	4.9	0.39		mg/Kg-dry	1	6/29/2013
Anthracene	42	0.39		mg/Kg-dry	1	6/29/2013
Benz(a)anthracene	77	3.9		mg/Kg-dry	10	7/1/2013
Benzo(a)pyrene	73	3.9		mg/Kg-dry	10	7/1/2013
Benzo(b)fluoranthene	53	3.9		mg/Kg-dry	10	7/1/2013
Benzo(g,h,i)perylene	30	0.39		mg/Kg-dry	1	6/29/2013
Benzo(k)fluoranthene	61	3.9		mg/Kg-dry	10	7/1/2013
Chrysene	70	3.9		mg/Kg-dry	10	7/1/2013
Dibenz(a,h)anthracene	16	0.39		mg/Kg-dry	1	6/29/2013
Fluoranthene	180	3.9		mg/Kg-dry	10	7/1/2013
Fluorene	18	0.39		mg/Kg-dry	1	6/29/2013
Indeno(1,2,3-cd)pyrene	28	0.39		mg/Kg-dry	1	6/29/2013
Naphthalene	5.7	0.39		mg/Kg-dry	1	6/29/2013
Phenanthrene	160	3.9		mg/Kg-dry	10	7/1/2013
Pyrene	140	3.9		mg/Kg-dry	10	7/1/2013
BTEX by GC/MS	**SW5035/8260B**			Prep Date: **6/27/2013**		Analyst: **PS**
Benzene	ND	0.005		mg/Kg-dry	1	7/1/2013
Ethylbenzene	ND	0.005		mg/Kg-dry	1	7/1/2013
Toluene	ND	0.005		mg/Kg-dry	1	7/1/2013
Xylenes, Total	ND	0.015		mg/Kg-dry	1	7/1/2013
pH (25 °C)	**SW9045C**			Prep Date: **7/2/2013**		Analyst: **RW**
pH	8.3			pH Units	1	7/2/2013
Percent Moisture	**D2974**			Prep Date: **6/27/2013**		Analyst: **SDA**
Percent Moisture	16.6	0.2	*	wt%	1	6/27/2013

Qualifiers:
ND - Not Detected at the Reporting Limit
J - Analyte detected below quantitation limits
B - Analyte detected in the associated Method Blank
HT - Sample received past holding time
* - Non-accredited parameter
RL - Reporting / Quantitation Limit for the analysis
S - Spike Recovery outside accepted recovery limits
R - RPD outside accepted recovery limits
E - Value above quantitation range
H - Holding time exceeded

STAT Analysis Corporation
2242 West Harrison St., Suite 200, Chicago, IL 60612-3766
Tel: (312) 733-0551 Fax: (312) 733-2386 STATinfo@STATAnalysis.com
Accreditation Numbers: IEPA ELAP 100445; ORELAP IL300001; AIHA 101160; NVLAP LabCode 101202

Date Reported: September 30, 2013
Date Printed: September 30, 2013

Client: Terracon Consultants, Inc.
Lab Order: 13060930
Project: A2137008, 650 West 83rd Street, Chicago IL
Lab ID: 13060930-002

Client Sample ID: B8 (4-6)
Collection Date 6/26/2013 4:20:00 PM
Matrix: Soil

Analyses	Result	RL	Qualifier	Units	DF	Date Analyzed
PCBs		**SW8082 (SW3550B)**		Prep Date: **6/27/2013**		Analyst: **GVC**
Aroclor 1016	ND	0.11		mg/Kg-dry	1	6/27/2013
Aroclor 1221	ND	0.11		mg/Kg-dry	1	6/27/2013
Aroclor 1232	ND	0.11		mg/Kg-dry	1	6/27/2013
Aroclor 1242	ND	0.11		mg/Kg-dry	1	6/27/2013
Aroclor 1248	ND	0.11		mg/Kg-dry	1	6/27/2013
Aroclor 1254	ND	0.11		mg/Kg-dry	1	6/27/2013
Aroclor 1260	ND	0.11		mg/Kg-dry	1	6/27/2013
Pesticides		**SW8081 (SW3550B)**		Prep Date: **6/27/2013**		Analyst: **GVC**
4,4'-DDD	ND	0.0021		mg/Kg-dry	1	6/27/2013
4,4'-DDE	ND	0.0021		mg/Kg-dry	1	6/27/2013
4,4'-DDT	ND	0.0021		mg/Kg-dry	1	6/27/2013
Aldrin	ND	0.0021		mg/Kg-dry	1	6/27/2013
alpha-BHC	ND	0.0021		mg/Kg-dry	1	6/27/2013
alpha-Chlordane	ND	0.0021		mg/Kg-dry	1	6/27/2013
beta-BHC	ND	0.0021		mg/Kg-dry	1	6/27/2013
Chlordane	ND	0.021		mg/Kg-dry	1	6/27/2013
delta-BHC	ND	0.0021		mg/Kg-dry	1	6/27/2013
Dieldrin	ND	0.0021		mg/Kg-dry	1	6/27/2013
Endosulfan I	ND	0.0021		mg/Kg-dry	1	6/27/2013
Endosulfan II	ND	0.0021		mg/Kg-dry	1	6/27/2013
Endosulfan sulfate	ND	0.0021		mg/Kg-dry	1	6/27/2013
Endrin	ND	0.0021		mg/Kg-dry	1	6/27/2013
Endrin aldehyde	ND	0.0021		mg/Kg-dry	1	6/27/2013
Endrin ketone	ND	0.0021		mg/Kg-dry	1	6/27/2013
gamma-BHC	ND	0.0021		mg/Kg-dry	1	6/27/2013
gamma-Chlordane	ND	0.0021		mg/Kg-dry	1	6/27/2013
Heptachlor	ND	0.0021		mg/Kg-dry	1	6/27/2013
Heptachlor epoxide	ND	0.0021		mg/Kg-dry	1	6/27/2013
Methoxychlor	ND	0.0021		mg/Kg-dry	1	6/27/2013
Toxaphene	ND	0.044		mg/Kg-dry	1	6/27/2013
Herbicides in Soil		**SW8321A (SW3550B)**		Prep Date: **6/27/2013**		Analyst: **MEP**
2,4,5-TP (Silvex)	ND	0.0043		mg/Kg-dry	1	6/27/2013
2,4-D	ND	0.0043		mg/Kg-dry	1	6/27/2013
Dalapon	ND	0.043		mg/Kg-dry	1	6/27/2013
Dinoseb	ND	0.0088		mg/Kg-dry	1	6/27/2013
Pentachlorophenol	ND	0.013	*	mg/Kg-dry	1	6/27/2013
Picloram	ND	0.0088	*	mg/Kg-dry	1	6/27/2013

Qualifiers:
ND - Not Detected at the Reporting Limit
J - Analyte detected below quantitation limits
B - Analyte detected in the associated Method Blank
HT - Sample received past holding time
* - Non-accredited parameter
RL - Reporting / Quantitation Limit for the analysis
S - Spike Recovery outside accepted recovery limits
R - RPD outside accepted recovery limits
E - Value above quantitation range
H - Holding time exceeded

STAT Analysis Corporation
2242 West Harrison St., Suite 200, Chicago, IL 60612-3766
Tel: (312) 733-0551 Fax: (312) 733-2386 STATinfo@STATAnalysis.com
Accreditation Numbers: IEPA ELAP 100445; ORELAP IL300001; AIHA 101160; NVLAP LabCode 101202

Date Reported: September 30, 2013
Date Printed: September 30, 2013

Client: Terracon Consultants, Inc.
Lab Order: 13060930
Project: A2137008, 650 West 83rd Street, Chicago IL
Lab ID: 13060930-002

Client Sample ID: B8 (4-6)
Collection Date 6/26/2013 4:20:00 PM
Matrix: Soil

Analyses	Result	RL	Qualifier	Units	DF	Date Analyzed
Mercury	**SW7471A**			Prep Date: **6/28/2013**		Analyst: **LB**
Mercury	0.038	0.026		mg/Kg-dry	1	6/28/2013
Metals by ICP/MS	**SW6020 (SW3050B)**			Prep Date: **7/1/2013**		Analyst: **JG**
Aluminum	8500	240		mg/Kg-dry	100	7/2/2013
Antimony	ND	2.4		mg/Kg-dry	10	7/2/2013
Arsenic	7.2	1.2		mg/Kg-dry	10	7/2/2013
Barium	230	1.2		mg/Kg-dry	10	7/2/2013
Beryllium	2.5	0.59		mg/Kg-dry	10	7/2/2013
Cadmium	1.2	0.59		mg/Kg-dry	10	7/2/2013
Calcium	24000	71		mg/Kg-dry	10	7/2/2013
Chromium	15	1.2		mg/Kg-dry	10	7/2/2013
Cobalt	5.7	1.2		mg/Kg-dry	10	7/2/2013
Copper	20	3		mg/Kg-dry	10	7/2/2013
Iron	24000	360		mg/Kg-dry	100	7/2/2013
Lead	57	0.59		mg/Kg-dry	10	7/2/2013
Magnesium	8400	36		mg/Kg-dry	10	7/2/2013
Manganese	230	1.2		mg/Kg-dry	10	7/2/2013
Nickel	20	1.2		mg/Kg-dry	10	7/2/2013
Potassium	970	36		mg/Kg-dry	10	7/2/2013
Selenium	ND	1.2		mg/Kg-dry	10	7/2/2013
Silver	ND	1.2		mg/Kg-dry	10	7/2/2013
Sodium	540	71		mg/Kg-dry	10	7/2/2013
Thallium	ND	1.2		mg/Kg-dry	10	7/2/2013
Vanadium	28	1.2		mg/Kg-dry	10	7/2/2013
Zinc	110	5.9		mg/Kg-dry	10	7/2/2013
Semivolatile Organic Compounds by GC/MS	**SW8270C (SW3550B)**			Prep Date: **6/27/2013**		Analyst: **DM**
Acenaphthene	1.9	0.044		mg/Kg-dry	1	6/29/2013
Acenaphthylene	0.42	0.044		mg/Kg-dry	1	6/29/2013
Aniline	ND	0.44		mg/Kg-dry	1	6/29/2013
Anthracene	9.7	0.44		mg/Kg-dry	10	7/1/2013
Benz(a)anthracene	19	0.44		mg/Kg-dry	10	7/1/2013
Benzidine	ND	0.44		mg/Kg-dry	1	6/29/2013
Benzo(a)pyrene	18	0.44		mg/Kg-dry	10	7/1/2013
Benzo(b)fluoranthene	14	0.44		mg/Kg-dry	10	7/1/2013
Benzo(g,h,i)perylene	8	0.44		mg/Kg-dry	10	7/1/2013
Benzo(k)fluoranthene	17	0.44		mg/Kg-dry	10	7/1/2013
Benzoic acid	ND	1.1		mg/Kg-dry	1	6/29/2013
Benzyl alcohol	ND	0.22		mg/Kg-dry	1	6/29/2013

Qualifiers:
ND - Not Detected at the Reporting Limit
J - Analyte detected below quantitation limits
B - Analyte detected in the associated Method Blank
HT - Sample received past holding time
* - Non-accredited parameter
RL - Reporting / Quantitation Limit for the analysis
S - Spike Recovery outside accepted recovery limits
R - RPD outside accepted recovery limits
E - Value above quantitation range
H - Holding time exceeded

STAT Analysis Corporation
2242 West Harrison St., Suite 200, Chicago, IL 60612-3766
Tel: (312) 733-0551 Fax: (312) 733-2386 STATinfo@STATAnalysis.com
Accreditation Numbers: IEPA ELAP 100445; ORELAP IL300001; AIHA 101160; NVLAP LabCode 101202

Date Reported: September 30, 2013
Date Printed: September 30, 2013

Client: Terracon Consultants, Inc.
Lab Order: 13060930
Project: A2137008, 650 West 83rd Street, Chicago IL
Lab ID: 13060930-002

Client Sample ID: B8 (4-6)
Collection Date 6/26/2013 4:20:00 PM
Matrix: Soil

Analyses	Result	RL	Qualifier	Units	DF	Date Analyzed
Semivolatile Organic Compounds by GC/MS	**SW8270C (SW3550B)**			Prep Date: **6/27/2013**		Analyst: **DM**
Bis(2-chloroethoxy)methane	ND	0.22		mg/Kg-dry	1	6/29/2013
Bis(2-chloroethyl)ether	ND	0.22		mg/Kg-dry	1	6/29/2013
Bis(2-ethylhexyl)phthalate	ND	1.1		mg/Kg-dry	1	6/29/2013
4-Bromophenyl phenyl ether	ND	0.22		mg/Kg-dry	1	6/29/2013
Butyl benzyl phthalate	ND	0.22		mg/Kg-dry	1	6/29/2013
Carbazole	2	0.22		mg/Kg-dry	1	6/29/2013
4-Chloroaniline	ND	0.22		mg/Kg-dry	1	6/29/2013
4-Chloro-3-methylphenol	ND	0.44		mg/Kg-dry	1	6/29/2013
2-Chloronaphthalene	ND	0.22		mg/Kg-dry	1	6/29/2013
2-Chlorophenol	ND	0.22		mg/Kg-dry	1	6/29/2013
4-Chlorophenyl phenyl ether	ND	0.22		mg/Kg-dry	1	6/29/2013
Chrysene	18	0.44		mg/Kg-dry	10	7/1/2013
Dibenz(a,h)anthracene	4.2	0.044		mg/Kg-dry	1	6/29/2013
Dibenzofuran	2.2	0.22		mg/Kg-dry	1	6/29/2013
1,2-Dichlorobenzene	ND	0.22		mg/Kg-dry	1	6/29/2013
1,3-Dichlorobenzene	ND	0.22		mg/Kg-dry	1	6/29/2013
1,4-Dichlorobenzene	ND	0.22		mg/Kg-dry	1	6/29/2013
3,3'-Dichlorobenzidine	ND	0.22		mg/Kg-dry	1	6/29/2013
2,4-Dichlorophenol	ND	0.22		mg/Kg-dry	1	6/29/2013
Diethyl phthalate	ND	0.22		mg/Kg-dry	1	6/29/2013
2,4-Dimethylphenol	ND	0.22		mg/Kg-dry	1	6/29/2013
Dimethyl phthalate	ND	0.22		mg/Kg-dry	1	6/29/2013
4,6-Dinitro-2-methylphenol	ND	0.44		mg/Kg-dry	1	6/29/2013
2,4-Dinitrophenol	ND	1.1		mg/Kg-dry	1	6/29/2013
2,4-Dinitrotoluene	ND	0.044		mg/Kg-dry	1	6/29/2013
2,6-Dinitrotoluene	ND	0.044		mg/Kg-dry	1	6/29/2013
Di-n-butyl phthalate	ND	0.22		mg/Kg-dry	1	6/29/2013
Di-n-octyl phthalate	ND	0.22		mg/Kg-dry	1	6/29/2013
Fluoranthene	40	0.44		mg/Kg-dry	10	7/1/2013
Fluorene	3.7	0.044		mg/Kg-dry	1	6/29/2013
Hexachlorobenzene	ND	0.22		mg/Kg-dry	1	6/29/2013
Hexachlorobutadiene	ND	0.22		mg/Kg-dry	1	6/29/2013
Hexachlorocyclopentadiene	ND	0.22		mg/Kg-dry	1	6/29/2013
Hexachloroethane	ND	0.22		mg/Kg-dry	1	6/29/2013
Indeno(1,2,3-cd)pyrene	7.7	0.44		mg/Kg-dry	10	7/1/2013
Isophorone	ND	0.22		mg/Kg-dry	1	6/29/2013
2-Methylnaphthalene	0.62	0.22		mg/Kg-dry	1	6/29/2013
2-Methylphenol	ND	0.22		mg/Kg-dry	1	6/29/2013

Qualifiers:
ND - Not Detected at the Reporting Limit
J - Analyte detected below quantitation limits
B - Analyte detected in the associated Method Blank
HT - Sample received past holding time
* - Non-accredited parameter
RL - Reporting / Quantitation Limit for the analysis
S - Spike Recovery outside accepted recovery limits
R - RPD outside accepted recovery limits
E - Value above quantitation range
H - Holding time exceeded

STAT Analysis Corporation
2242 West Harrison St., Suite 200, Chicago, IL 60612-3766
Tel: (312) 733-0551 Fax: (312) 733-2386 STATinfo@STATAnalysis.com
Accreditation Numbers: IEPA ELAP 100445; ORELAP IL300001; AIHA 101160; NVLAP LabCode 101202

Date Reported: September 30, 2013
Date Printed: September 30, 2013

Client: Terracon Consultants, Inc.
Lab Order: 13060930
Project: A2137008, 650 West 83rd Street, Chicago IL
Lab ID: 13060930-002

Client Sample ID: B8 (4-6)
Collection Date 6/26/2013 4:20:00 PM
Matrix: Soil

Analyses	Result	RL	Qualifier	Units	DF	Date Analyzed
Semivolatile Organic Compounds by GC/MS	**SW8270C (SW3550B)**			Prep Date: **6/27/2013**		Analyst: **DM**
4-Methylphenol	ND	0.22		mg/Kg-dry	1	6/29/2013
Naphthalene	1	0.044		mg/Kg-dry	1	6/29/2013
2-Nitroaniline	ND	0.22		mg/Kg-dry	1	6/29/2013
3-Nitroaniline	ND	0.22		mg/Kg-dry	1	6/29/2013
4-Nitroaniline	ND	0.22		mg/Kg-dry	1	6/29/2013
2-Nitrophenol	ND	0.22		mg/Kg-dry	1	6/29/2013
4-Nitrophenol	ND	0.44		mg/Kg-dry	1	6/29/2013
Nitrobenzene	ND	0.044		mg/Kg-dry	1	6/29/2013
N-Nitrosodi-n-propylamine	ND	0.044		mg/Kg-dry	1	6/29/2013
N-Nitrosodimethylamine	ND	0.22		mg/Kg-dry	1	6/29/2013
N-Nitrosodiphenylamine	ND	0.044		mg/Kg-dry	1	6/29/2013
2, 2'-oxybis(1-Chloropropane)	ND	0.22		mg/Kg-dry	1	6/29/2013
Pentachlorophenol	ND	0.088		mg/Kg-dry	1	6/29/2013
Phenanthrene	32	0.44		mg/Kg-dry	10	7/1/2013
Phenol	ND	0.22		mg/Kg-dry	1	6/29/2013
Pyrene	32	0.44		mg/Kg-dry	10	7/1/2013
Pyridine	ND	0.88		mg/Kg-dry	1	6/29/2013
1,2,4-Trichlorobenzene	ND	0.22		mg/Kg-dry	1	6/29/2013
2,4,5-Trichlorophenol	ND	0.22		mg/Kg-dry	1	6/29/2013
2,4,6-Trichlorophenol	ND	0.22		mg/Kg-dry	1	6/29/2013
Volatile Organic Compounds by GC/MS	**SW5035/8260B**			Prep Date: **6/27/2013**		Analyst: **PS**
Acetone	ND	0.097		mg/Kg-dry	1	7/1/2013
Benzene	ND	0.0064		mg/Kg-dry	1	7/1/2013
Bromodichloromethane	ND	0.0064		mg/Kg-dry	1	7/1/2013
Bromoform	ND	0.0064		mg/Kg-dry	1	7/1/2013
Bromomethane	ND	0.013		mg/Kg-dry	1	7/1/2013
2-Butanone	ND	0.097		mg/Kg-dry	1	7/1/2013
Carbon disulfide	ND	0.064		mg/Kg-dry	1	7/1/2013
Carbon tetrachloride	ND	0.0064		mg/Kg-dry	1	7/1/2013
Chlorobenzene	ND	0.0064		mg/Kg-dry	1	7/1/2013
Chloroethane	ND	0.013		mg/Kg-dry	1	7/1/2013
Chloroform	ND	0.0064		mg/Kg-dry	1	7/1/2013
Chloromethane	ND	0.013		mg/Kg-dry	1	7/1/2013
Dibromochloromethane	ND	0.0064		mg/Kg-dry	1	7/1/2013
1,1-Dichloroethane	ND	0.0064		mg/Kg-dry	1	7/1/2013
1,2-Dichloroethane	ND	0.0064		mg/Kg-dry	1	7/1/2013
1,1-Dichloroethene	ND	0.0064		mg/Kg-dry	1	7/1/2013
cis-1,2-Dichloroethene	ND	0.0064		mg/Kg-dry	1	7/1/2013

Qualifiers:
ND - Not Detected at the Reporting Limit
J - Analyte detected below quantitation limits
B - Analyte detected in the associated Method Blank
HT - Sample received past holding time
* - Non-accredited parameter
RL - Reporting / Quantitation Limit for the analysis
S - Spike Recovery outside accepted recovery limits
R - RPD outside accepted recovery limits
E - Value above quantitation range
H - Holding time exceeded

STAT Analysis Corporation
2242 West Harrison St., Suite 200, Chicago, IL 60612-3766
Tel: (312) 733-0551 Fax: (312) 733-2386 STATinfo@STATAnalysis.com
Accreditation Numbers: IEPA ELAP 100445; ORELAP IL300001; AIHA 101160; NVLAP LabCode 101202

Date Reported: September 30, 2013
Date Printed: September 30, 2013

Client: Terracon Consultants, Inc.
Lab Order: 13060930
Project: A2137008, 650 West 83rd Street, Chicago IL
Lab ID: 13060930-002

Client Sample ID: B8 (4-6)
Collection Date 6/26/2013 4:20:00 PM
Matrix: Soil

Analyses	Result	RL	Qualifier	Units	DF	Date Analyzed
Volatile Organic Compounds by GC/MS	**SW5035/8260B**			Prep Date: **6/27/2013**		Analyst: **PS**
trans-1,2-Dichloroethene	ND	0.0064		mg/Kg-dry	1	7/1/2013
1,2-Dichloropropane	ND	0.0064		mg/Kg-dry	1	7/1/2013
cis-1,3-Dichloropropene	ND	0.0026		mg/Kg-dry	1	7/1/2013
trans-1,3-Dichloropropene	ND	0.0026		mg/Kg-dry	1	7/1/2013
Ethylbenzene	ND	0.0064		mg/Kg-dry	1	7/1/2013
2-Hexanone	ND	0.026		mg/Kg-dry	1	7/1/2013
4-Methyl-2-pentanone	ND	0.026		mg/Kg-dry	1	7/1/2013
Methylene chloride	ND	0.013		mg/Kg-dry	1	7/1/2013
Methyl tert-butyl ether	ND	0.0064		mg/Kg-dry	1	7/1/2013
Styrene	ND	0.0064		mg/Kg-dry	1	7/1/2013
1,1,2,2-Tetrachloroethane	ND	0.0064		mg/Kg-dry	1	7/1/2013
Tetrachloroethene	ND	0.0064		mg/Kg-dry	1	7/1/2013
Toluene	ND	0.0064		mg/Kg-dry	1	7/1/2013
1,1,1-Trichloroethane	ND	0.0064		mg/Kg-dry	1	7/1/2013
1,1,2-Trichloroethane	ND	0.0064		mg/Kg-dry	1	7/1/2013
Trichloroethene	ND	0.0064		mg/Kg-dry	1	7/1/2013
Vinyl chloride	ND	0.0064		mg/Kg-dry	1	7/1/2013
Xylenes, Total	ND	0.019		mg/Kg-dry	1	7/1/2013
Cyanide, Total	**SW9012A**			Prep Date: **6/27/2013**		Analyst: **MDDT**
Cyanide	ND	0.33		mg/Kg-dry	1	6/28/2013
pH (25 °C)	**SW9045C**			Prep Date: **7/2/2013**		Analyst: **RW**
pH	8.0			pH Units	1	7/2/2013
Percent Moisture	**D2974**			Prep Date: **6/27/2013**		Analyst: **SDA**
Percent Moisture	24.5	0.2	*	wt%	1	6/27/2013

Qualifiers:
ND - Not Detected at the Reporting Limit
J - Analyte detected below quantitation limits
B - Analyte detected in the associated Method Blank
HT - Sample received past holding time
* - Non-accredited parameter
RL - Reporting / Quantitation Limit for the analysis
S - Spike Recovery outside accepted recovery limits
R - RPD outside accepted recovery limits
E - Value above quantitation range
H - Holding time exceeded

STAT Analysis Corporation
2242 West Harrison St., Suite 200, Chicago, IL 60612-3766
Tel: (312) 733-0551 Fax: (312) 733-2386 STATinfo@STATAnalysis.com
Accreditation Numbers: IEPA ELAP 100445; ORELAP IL300001; AIHA 101160; NVLAP LabCode 101202

Date Reported: September 30, 2013
Date Printed: September 30, 2013

Client: Terracon Consultants, Inc.
Lab Order: 13060930
Project: A2137008, 650 West 83rd Street, Chicago IL
Lab ID: 13060930-003

Client Sample ID: B9 (1-3)
Collection Date 6/26/2013 3:50:00 PM
Matrix: Soil

Analyses	Result	RL	Qualifier	Units	DF	Date Analyzed
Mercury	**SW7471A**			Prep Date: **7/3/2013**		Analyst: **LB**
Mercury	0.041	0.017		mg/Kg-dry	1	7/3/2013
Metals by ICP/MS	**SW6020 (SW3050B)**			Prep Date: **7/1/2013**		Analyst: **JG**
Arsenic	6.6	1.2		mg/Kg-dry	10	7/2/2013
Barium	490	1.2		mg/Kg-dry	10	7/2/2013
Cadmium	ND	0.58		mg/Kg-dry	10	7/2/2013
Chromium	13	1.2		mg/Kg-dry	10	7/2/2013
Lead	64	0.58		mg/Kg-dry	10	7/2/2013
Selenium	ND	1.2		mg/Kg-dry	10	7/2/2013
Silver	ND	1.2		mg/Kg-dry	10	7/2/2013
Semivolatile Organic Compounds by GC/MS	**SW8270C (SW3550B)**			Prep Date: **6/27/2013**		Analyst: **DM**
Acenaphthene	ND	0.36		mg/Kg-dry	1	7/1/2013
Acenaphthylene	ND	0.36		mg/Kg-dry	1	7/1/2013
Anthracene	ND	0.36		mg/Kg-dry	1	7/1/2013
Benz(a)anthracene	0.44	0.36		mg/Kg-dry	1	7/1/2013
Benzo(a)pyrene	1.2	0.36		mg/Kg-dry	1	7/1/2013
Benzo(b)fluoranthene	0.81	0.36		mg/Kg-dry	1	7/1/2013
Benzo(g,h,i)perylene	1.1	0.36		mg/Kg-dry	1	7/1/2013
Benzo(k)fluoranthene	0.52	0.36		mg/Kg-dry	1	7/1/2013
Chrysene	0.6	0.36		mg/Kg-dry	1	7/1/2013
Dibenz(a,h)anthracene	0.51	0.36		mg/Kg-dry	1	7/1/2013
Fluoranthene	0.86	0.36		mg/Kg-dry	1	7/1/2013
Fluorene	ND	0.36		mg/Kg-dry	1	7/1/2013
Indeno(1,2,3-cd)pyrene	0.73	0.36		mg/Kg-dry	1	7/1/2013
Naphthalene	ND	0.36		mg/Kg-dry	1	7/1/2013
Phenanthrene	0.43	0.36		mg/Kg-dry	1	7/1/2013
Pyrene	0.98	0.36		mg/Kg-dry	1	7/1/2013
BTEX by GC/MS	**SW5035/8260B**			Prep Date: **6/28/2013**		Analyst: **PS**
Benzene	ND	0.005		mg/Kg-dry	1	7/1/2013
Ethylbenzene	ND	0.005		mg/Kg-dry	1	7/1/2013
Toluene	ND	0.005		mg/Kg-dry	1	7/1/2013
Xylenes, Total	ND	0.015		mg/Kg-dry	1	7/1/2013
Percent Moisture	**D2974**			Prep Date: **6/27/2013**		Analyst: **SDA**
Percent Moisture	10.1	0.2	*	wt%	1	6/27/2013

Qualifiers:
ND - Not Detected at the Reporting Limit
J - Analyte detected below quantitation limits
B - Analyte detected in the associated Method Blank
HT - Sample received past holding time
* - Non-accredited parameter
RL - Reporting / Quantitation Limit for the analysis
S - Spike Recovery outside accepted recovery limits
R - RPD outside accepted recovery limits
E - Value above quantitation range
H - Holding time exceeded

STAT Analysis Corporation
2242 West Harrison St., Suite 200, Chicago, IL 60612-3766
Tel: (312) 733-0551 Fax: (312) 733-2386 STATinfo@STATAnalysis.com
Accreditation Numbers: IEPA ELAP 100445; ORELAP IL300001; AIHA 101160; NVLAP LabCode 101202

Date Reported: September 30, 2013
Date Printed: September 30, 2013

Client: Terracon Consultants, Inc.
Lab Order: 13060930
Project: A2137008, 650 West 83rd Street, Chicago IL
Lab ID: 13060930-004

Client Sample ID: B9 (4-6)
Collection Date 6/26/2013 3:45:00 PM
Matrix: Soil

Analyses	Result	RL	Qualifier	Units	DF	Date Analyzed
Mercury	**SW7471A**			Prep Date: **7/3/2013**		Analyst: **LB**
Mercury	0.34	0.027		mg/Kg-dry	1	7/3/2013
Metals by ICP/MS	**SW6020 (SW3050B)**			Prep Date: **7/1/2013**		Analyst: **JG**
Arsenic	7.2	1.5		mg/Kg-dry	10	7/2/2013
Barium	230	1.5		mg/Kg-dry	10	7/2/2013
Cadmium	1.1	0.75		mg/Kg-dry	10	7/2/2013
Chromium	18	1.5		mg/Kg-dry	10	7/2/2013
Lead	140	0.75		mg/Kg-dry	10	7/2/2013
Selenium	ND	1.5		mg/Kg-dry	10	7/2/2013
Silver	ND	1.5		mg/Kg-dry	10	7/2/2013
Semivolatile Organic Compounds by GC/MS	**SW8270C (SW3550B)**			Prep Date: **6/27/2013**		Analyst: **DM**
Acenaphthene	1.3	0.05		mg/Kg-dry	1	7/1/2013
Acenaphthylene	0.76	0.05		mg/Kg-dry	1	7/1/2013
Anthracene	3.3	0.05		mg/Kg-dry	1	7/1/2013
Benz(a)anthracene	6.2	0.5		mg/Kg-dry	10	7/1/2013
Benzo(a)pyrene	5.7	0.05		mg/Kg-dry	1	7/1/2013
Benzo(b)fluoranthene	5.3	0.05		mg/Kg-dry	1	7/1/2013
Benzo(g,h,i)perylene	2.6	0.05		mg/Kg-dry	1	7/1/2013
Benzo(k)fluoranthene	4.6	0.05		mg/Kg-dry	1	7/1/2013
Chrysene	6.2	0.5		mg/Kg-dry	10	7/1/2013
Dibenz(a,h)anthracene	1.5	0.05		mg/Kg-dry	1	7/1/2013
Fluoranthene	15	0.5		mg/Kg-dry	10	7/1/2013
Fluorene	2.7	0.05		mg/Kg-dry	1	7/1/2013
Indeno(1,2,3-cd)pyrene	2.4	0.05		mg/Kg-dry	1	7/1/2013
Naphthalene	3.1	0.05		mg/Kg-dry	1	7/1/2013
Phenanthrene	14	0.5		mg/Kg-dry	10	7/1/2013
Pyrene	12	0.5		mg/Kg-dry	10	7/1/2013
BTEX by GC/MS	**SW5035/8260B**			Prep Date: **6/28/2013**		Analyst: **PS**
Benzene	ND	0.0076		mg/Kg-dry	1	7/1/2013
Ethylbenzene	ND	0.0076		mg/Kg-dry	1	7/1/2013
Toluene	ND	0.0076		mg/Kg-dry	1	7/1/2013
Xylenes, Total	ND	0.023		mg/Kg-dry	1	7/1/2013
Percent Moisture	**D2974**			Prep Date: **6/27/2013**		Analyst: **SDA**
Percent Moisture	33.7	0.2	*	wt%	1	6/27/2013

Qualifiers:
ND - Not Detected at the Reporting Limit
J - Analyte detected below quantitation limits
B - Analyte detected in the associated Method Blank
HT - Sample received past holding time
* - Non-accredited parameter
RL - Reporting / Quantitation Limit for the analysis
S - Spike Recovery outside accepted recovery limits
R - RPD outside accepted recovery limits
E - Value above quantitation range
H - Holding time exceeded

STAT Analysis Corporation
2242 West Harrison St., Suite 200, Chicago, IL 60612-3766
Tel: (312) 733-0551 Fax: (312) 733-2386 STATinfo@STATAnalysis.com
Accreditation Numbers: IEPA ELAP 100445; ORELAP IL300001; AIHA 101160; NVLAP LabCode 101202

Date Reported: September 30, 2013
Date Printed: September 30, 2013

Client: Terracon Consultants, Inc.
Lab Order: 13060930
Project: A2137008, 650 West 83rd Street, Chicago IL
Lab ID: 13060930-005

Client Sample ID: B17 (1-3)
Collection Date 6/26/2013 3:10:00 PM
Matrix: Soil

Analyses	Result	RL	Qualifier	Units	DF	Date Analyzed
Mercury	**SW7471A**			Prep Date: **7/3/2013**		Analyst: **LB**
Mercury	0.2	0.025		mg/Kg-dry	1	7/3/2013
Metals by ICP/MS	**SW6020 (SW3050B)**			Prep Date: **7/1/2013**		Analyst: **JG**
Arsenic	14	1.1		mg/Kg-dry	10	7/2/2013
Barium	880	1.1		mg/Kg-dry	10	7/2/2013
Cadmium	3.2	0.56		mg/Kg-dry	10	7/2/2013
Chromium	35	1.1		mg/Kg-dry	10	7/2/2013
Lead	1200	0.56		mg/Kg-dry	10	7/2/2013
Selenium	ND	1.1		mg/Kg-dry	10	7/2/2013
Silver	1.7	1.1		mg/Kg-dry	10	7/2/2013
TCLP Metals by ICP/MS	**SW1311/6020 (SW3005A)**			Prep Date: **9/24/2013**		Analyst: **JG**
Lead	0.2	0.005		mg/L	5	9/25/2013
Semivolatile Organic Compounds by GC/MS	**SW8270C (SW3550B)**			Prep Date: **6/27/2013**		Analyst: **DM**
Acenaphthene	ND	0.41		mg/Kg-dry	1	7/1/2013
Acenaphthylene	ND	0.41		mg/Kg-dry	1	7/1/2013
Anthracene	ND	0.41		mg/Kg-dry	1	7/1/2013
Benz(a)anthracene	0.89	0.41		mg/Kg-dry	1	7/1/2013
Benzo(a)pyrene	0.92	0.41		mg/Kg-dry	1	7/1/2013
Benzo(b)fluoranthene	0.68	0.41		mg/Kg-dry	1	7/1/2013
Benzo(g,h,i)perylene	0.45	0.41		mg/Kg-dry	1	7/1/2013
Benzo(k)fluoranthene	0.47	0.41		mg/Kg-dry	1	7/1/2013
Chrysene	0.86	0.41		mg/Kg-dry	1	7/1/2013
Dibenz(a,h)anthracene	ND	0.41		mg/Kg-dry	1	7/1/2013
Fluoranthene	1.8	0.41		mg/Kg-dry	1	7/1/2013
Fluorene	ND	0.41		mg/Kg-dry	1	7/1/2013
Indeno(1,2,3-cd)pyrene	0.42	0.41		mg/Kg-dry	1	7/1/2013
Naphthalene	ND	0.41		mg/Kg-dry	1	7/1/2013
Phenanthrene	0.82	0.41		mg/Kg-dry	1	7/1/2013
Pyrene	1.4	0.41		mg/Kg-dry	1	7/1/2013
BTEX by GC/MS	**SW5035/8260B**			Prep Date: **6/28/2013**		Analyst: **PS**
Benzene	ND	0.0053		mg/Kg-dry	1	7/1/2013
Ethylbenzene	ND	0.0053		mg/Kg-dry	1	7/1/2013
Toluene	ND	0.0053		mg/Kg-dry	1	7/1/2013
Xylenes, Total	ND	0.016		mg/Kg-dry	1	7/1/2013
Percent Moisture	**D2974**			Prep Date: **6/27/2013**		Analyst: **SDA**
Percent Moisture	20.2	0.2	*	wt%	1	6/27/2013

Qualifiers:
ND - Not Detected at the Reporting Limit
J - Analyte detected below quantitation limits
B - Analyte detected in the associated Method Blank
HT - Sample received past holding time
* - Non-accredited parameter
RL - Reporting / Quantitation Limit for the analysis
S - Spike Recovery outside accepted recovery limits
R - RPD outside accepted recovery limits
E - Value above quantitation range
H - Holding time exceeded

STAT Analysis Corporation
2242 West Harrison St., Suite 200, Chicago, IL 60612-3766
Tel: (312) 733-0551 Fax: (312) 733-2386 STATinfo@STATAnalysis.com
Accreditation Numbers: IEPA ELAP 100445; ORELAP IL300001; AIHA 101160; NVLAP LabCode 101202

Date Reported: September 30, 2013
Date Printed: September 30, 2013

Client: Terracon Consultants, Inc.
Lab Order: 13060930
Project: A2137008, 650 West 83rd Street, Chicago IL
Lab ID: 13060930-006

Client Sample ID: B17 (4-6)
Collection Date 6/26/2013 3:20:00 PM
Matrix: Soil

Analyses	Result	RL	Qualifier	Units	DF	Date Analyzed
Mercury	**SW7471A**			Prep Date: **7/3/2013**		Analyst: **LB**
Mercury	2	0.14		mg/Kg-dry	5	7/3/2013
Metals by ICP/MS	**SW6020 (SW3050B)**			Prep Date: **7/1/2013**		Analyst: **JG**
Arsenic	31	1.5		mg/Kg-dry	10	7/2/2013
Barium	560	1.5		mg/Kg-dry	10	7/2/2013
Cadmium	2.4	0.76		mg/Kg-dry	10	7/2/2013
Chromium	30	1.5		mg/Kg-dry	10	7/2/2013
Lead	890	0.76		mg/Kg-dry	10	7/2/2013
Selenium	2.3	1.5		mg/Kg-dry	10	7/2/2013
Silver	ND	1.5		mg/Kg-dry	10	7/2/2013
Semivolatile Organic Compounds by GC/MS	**SW8270C (SW3550B)**			Prep Date: **6/27/2013**		Analyst: **DM**
Acenaphthene	ND	0.053		mg/Kg-dry	1	7/1/2013
Acenaphthylene	ND	0.053		mg/Kg-dry	1	7/1/2013
Anthracene	ND	0.053		mg/Kg-dry	1	7/1/2013
Benz(a)anthracene	0.058	0.053		mg/Kg-dry	1	7/1/2013
Benzo(a)pyrene	0.062	0.053		mg/Kg-dry	1	7/1/2013
Benzo(b)fluoranthene	0.067	0.053		mg/Kg-dry	1	7/1/2013
Benzo(g,h,i)perylene	ND	0.053		mg/Kg-dry	1	7/1/2013
Benzo(k)fluoranthene	ND	0.053		mg/Kg-dry	1	7/1/2013
Chrysene	0.081	0.053		mg/Kg-dry	1	7/1/2013
Dibenz(a,h)anthracene	ND	0.053		mg/Kg-dry	1	7/1/2013
Fluoranthene	0.11	0.053		mg/Kg-dry	1	7/1/2013
Fluorene	ND	0.053		mg/Kg-dry	1	7/1/2013
Indeno(1,2,3-cd)pyrene	ND	0.053		mg/Kg-dry	1	7/1/2013
Naphthalene	ND	0.053		mg/Kg-dry	1	7/1/2013
Phenanthrene	0.084	0.053		mg/Kg-dry	1	7/1/2013
Pyrene	0.11	0.053		mg/Kg-dry	1	7/1/2013
BTEX by GC/MS	**SW5035/8260B**			Prep Date: **6/28/2013**		Analyst: **PS**
Benzene	ND	0.0092		mg/Kg-dry	1	7/1/2013
Ethylbenzene	ND	0.0092		mg/Kg-dry	1	7/1/2013
Toluene	ND	0.0092		mg/Kg-dry	1	7/1/2013
Xylenes, Total	ND	0.028		mg/Kg-dry	1	7/1/2013
Percent Moisture	**D2974**			Prep Date: **6/27/2013**		Analyst: **SDA**
Percent Moisture	38.6	0.2	*	wt%	1	6/27/2013

Qualifiers:
ND - Not Detected at the Reporting Limit
J - Analyte detected below quantitation limits
B - Analyte detected in the associated Method Blank
HT - Sample received past holding time
* - Non-accredited parameter
RL - Reporting / Quantitation Limit for the analysis
S - Spike Recovery outside accepted recovery limits
R - RPD outside accepted recovery limits
E - Value above quantitation range
H - Holding time exceeded

STAT Analysis Corporation
2242 West Harrison St., Suite 200, Chicago, IL 60612-3766
Tel: (312) 733-0551 Fax: (312) 733-2386 STATinfo@STATAnalysis.com
Accreditation Numbers: IEPA ELAP 100445; ORELAP IL300001; AIHA 101160; NVLAP LabCode 101202

Date Reported: September 30, 2013
Date Printed: September 30, 2013

Client: Terracon Consultants, Inc.
Lab Order: 13060930
Project: A2137008, 650 West 83rd Street, Chicago IL
Lab ID: 13060930-007

Client Sample ID: B26 (1-3)
Collection Date 6/26/2013 2:30:00 PM
Matrix: Soil

Analyses	Result	RL	Qualifier	Units	DF	Date Analyzed
Mercury	**SW7471A**			Prep Date: **7/3/2013**		Analyst: **LB**
Mercury	0.36	0.023		mg/Kg-dry	1	7/3/2013
Metals by ICP/MS	**SW6020 (SW3050B)**			Prep Date: **7/1/2013**		Analyst: **JG**
Arsenic	27	1.1		mg/Kg-dry	10	7/2/2013
Barium	300	1.1		mg/Kg-dry	10	7/2/2013
Cadmium	2.1	0.54		mg/Kg-dry	10	7/2/2013
Chromium	18	1.1		mg/Kg-dry	10	7/2/2013
Lead	600	0.54		mg/Kg-dry	10	7/2/2013
Selenium	1.6	1.1		mg/Kg-dry	10	7/2/2013
Silver	ND	1.1		mg/Kg-dry	10	7/2/2013
Semivolatile Organic Compounds by GC/MS	**SW8270C (SW3550B)**			Prep Date: **6/27/2013**		Analyst: **DM**
Acenaphthene	6.2	0.39		mg/Kg-dry	1	7/1/2013
Acenaphthylene	ND	0.39		mg/Kg-dry	1	7/1/2013
Anthracene	20	0.39		mg/Kg-dry	1	7/1/2013
Benz(a)anthracene	29	0.39		mg/Kg-dry	1	7/1/2013
Benzo(a)pyrene	22	0.39		mg/Kg-dry	1	7/1/2013
Benzo(b)fluoranthene	22	0.39		mg/Kg-dry	1	7/1/2013
Benzo(g,h,i)perylene	10	0.39		mg/Kg-dry	1	7/1/2013
Benzo(k)fluoranthene	19	0.39		mg/Kg-dry	1	7/1/2013
Chrysene	31	0.39		mg/Kg-dry	1	7/1/2013
Dibenz(a,h)anthracene	6.4	0.39		mg/Kg-dry	1	7/1/2013
Fluoranthene	70	2		mg/Kg-dry	5	7/3/2013
Fluorene	11	0.39		mg/Kg-dry	1	7/1/2013
Indeno(1,2,3-cd)pyrene	9.5	0.39		mg/Kg-dry	1	7/1/2013
Naphthalene	5.5	0.39		mg/Kg-dry	1	7/1/2013
Phenanthrene	76	2		mg/Kg-dry	5	7/3/2013
Pyrene	53	2		mg/Kg-dry	5	7/3/2013
BTEX by GC/MS	**SW5035/8260B**			Prep Date: **6/28/2013**		Analyst: **PS**
Benzene	ND	0.0059		mg/Kg-dry	1	7/1/2013
Ethylbenzene	ND	0.0059		mg/Kg-dry	1	7/1/2013
Toluene	ND	0.0059		mg/Kg-dry	1	7/1/2013
Xylenes, Total	ND	0.018		mg/Kg-dry	1	7/1/2013
Percent Moisture	**D2974**			Prep Date: **6/27/2013**		Analyst: **SDA**
Percent Moisture	15.9	0.2	*	wt%	1	6/27/2013

Qualifiers:
ND - Not Detected at the Reporting Limit
J - Analyte detected below quantitation limits
B - Analyte detected in the associated Method Blank
HT - Sample received past holding time
* - Non-accredited parameter
RL - Reporting / Quantitation Limit for the analysis
S - Spike Recovery outside accepted recovery limits
R - RPD outside accepted recovery limits
E - Value above quantitation range
H - Holding time exceeded

STAT Analysis Corporation
2242 West Harrison St., Suite 200, Chicago, IL 60612-3766
Tel: (312) 733-0551 Fax: (312) 733-2386 STATinfo@STATAnalysis.com
Accreditation Numbers: IEPA ELAP 100445; ORELAP IL300001; AIHA 101160; NVLAP LabCode 101202

Date Reported: September 30, 2013
Date Printed: September 30, 2013

Client: Terracon Consultants, Inc.
Lab Order: 13060930
Project: A2137008, 650 West 83rd Street, Chicago IL
Lab ID: 13060930-008

Client Sample ID: B26 (6-8)
Collection Date 6/26/2013 2:55:00 PM
Matrix: Soil

Analyses	Result	RL	Qualifier	Units	DF	Date Analyzed
Mercury	**SW7471A**			Prep Date: **7/3/2013**		Analyst: **LB**
Mercury	ND	0.023		mg/Kg-dry	1	7/3/2013
Metals by ICP/MS	**SW6020 (SW3050B)**			Prep Date: **7/1/2013**		Analyst: **JG**
Arsenic	7.3	1.1		mg/Kg-dry	10	7/1/2013
Barium	47	1.1		mg/Kg-dry	10	7/1/2013
Cadmium	ND	0.55		mg/Kg-dry	10	7/1/2013
Chromium	16	1.1		mg/Kg-dry	10	7/1/2013
Lead	18	0.55		mg/Kg-dry	10	7/1/2013
Selenium	ND	1.1		mg/Kg-dry	10	7/1/2013
Silver	ND	1.1		mg/Kg-dry	10	7/1/2013
Semivolatile Organic Compounds by GC/MS	**SW8270C (SW3550B)**			Prep Date: **6/27/2013**		Analyst: **DM**
Acenaphthene	ND	0.04		mg/Kg-dry	1	7/1/2013
Acenaphthylene	ND	0.04		mg/Kg-dry	1	7/1/2013
Anthracene	ND	0.04		mg/Kg-dry	1	7/1/2013
Benz(a)anthracene	ND	0.04		mg/Kg-dry	1	7/1/2013
Benzo(a)pyrene	ND	0.04		mg/Kg-dry	1	7/1/2013
Benzo(b)fluoranthene	ND	0.04		mg/Kg-dry	1	7/1/2013
Benzo(g,h,i)perylene	ND	0.04		mg/Kg-dry	1	7/1/2013
Benzo(k)fluoranthene	ND	0.04		mg/Kg-dry	1	7/1/2013
Chrysene	ND	0.04		mg/Kg-dry	1	7/1/2013
Dibenz(a,h)anthracene	ND	0.04		mg/Kg-dry	1	7/1/2013
Fluoranthene	ND	0.04		mg/Kg-dry	1	7/1/2013
Fluorene	ND	0.04		mg/Kg-dry	1	7/1/2013
Indeno(1,2,3-cd)pyrene	ND	0.04		mg/Kg-dry	1	7/1/2013
Naphthalene	ND	0.04		mg/Kg-dry	1	7/1/2013
Phenanthrene	ND	0.04		mg/Kg-dry	1	7/1/2013
Pyrene	ND	0.04		mg/Kg-dry	1	7/1/2013
BTEX by GC/MS	**SW5035/8260B**			Prep Date: **6/28/2013**		Analyst: **PS**
Benzene	ND	0.0043		mg/Kg-dry	1	7/1/2013
Ethylbenzene	ND	0.0043		mg/Kg-dry	1	7/1/2013
Toluene	ND	0.0043		mg/Kg-dry	1	7/1/2013
Xylenes, Total	ND	0.013		mg/Kg-dry	1	7/1/2013
Percent Moisture	**D2974**			Prep Date: **6/27/2013**		Analyst: **SDA**
Percent Moisture	17.5	0.2	*	wt%	1	6/27/2013

Qualifiers:
- ND - Not Detected at the Reporting Limit
- J - Analyte detected below quantitation limits
- B - Analyte detected in the associated Method Blank
- HT - Sample received past holding time
- * - Non-accredited parameter
- RL - Reporting / Quantitation Limit for the analysis
- S - Spike Recovery outside accepted recovery limits
- R - RPD outside accepted recovery limits
- E - Value above quantitation range
- H - Holding time exceeded

STAT Analysis Corporation
2242 West Harrison St., Suite 200, Chicago, IL 60612-3766
Tel: (312) 733-0551 Fax: (312) 733-2386 STATinfo@STATAnalysis.com
Accreditation Numbers: IEPA ELAP 100445; ORELAP IL300001; AIHA 101160; NVLAP LabCode 101202

Date Reported: September 30, 2013
Date Printed: September 30, 2013

Client: Terracon Consultants, Inc.
Lab Order: 13060930
Project: A2137008, 650 West 83rd Street, Chicago IL
Lab ID: 13060930-009

Client Sample ID: B18 (1-3)
Collection Date 6/26/2013 1:20:00 PM
Matrix: Soil

Analyses	Result	RL	Qualifier	Units	DF	Date Analyzed
Mercury	**SW7471A**			Prep Date: **7/3/2013**		Analyst: **LB**
Mercury	0.096	0.018		mg/Kg-dry	1	7/3/2013
Metals by ICP/MS	**SW6020 (SW3050B)**			Prep Date: **7/1/2013**		Analyst: **JG**
Arsenic	8.1	1.1		mg/Kg-dry	10	7/2/2013
Barium	1500	1.1		mg/Kg-dry	10	7/2/2013
Cadmium	0.82	0.55		mg/Kg-dry	10	7/2/2013
Chromium	23	1.1		mg/Kg-dry	10	7/2/2013
Lead	150	0.55		mg/Kg-dry	10	7/2/2013
Selenium	ND	1.1		mg/Kg-dry	10	7/2/2013
Silver	ND	1.1		mg/Kg-dry	10	7/2/2013
Semivolatile Organic Compounds by GC/MS	**SW8270C (SW3550B)**			Prep Date: **6/27/2013**		Analyst: **DM**
Acenaphthene	ND	0.37		mg/Kg-dry	1	7/1/2013
Acenaphthylene	0.86	0.37		mg/Kg-dry	1	7/1/2013
Anthracene	2.4	0.37		mg/Kg-dry	1	7/1/2013
Benz(a)anthracene	8.2	0.37		mg/Kg-dry	1	7/1/2013
Benzo(a)pyrene	8.7	0.37		mg/Kg-dry	1	7/1/2013
Benzo(b)fluoranthene	8.9	0.37		mg/Kg-dry	1	7/1/2013
Benzo(g,h,i)perylene	4.4	0.37		mg/Kg-dry	1	7/1/2013
Benzo(k)fluoranthene	6.2	0.37		mg/Kg-dry	1	7/1/2013
Chrysene	7.7	0.37		mg/Kg-dry	1	7/1/2013
Dibenz(a,h)anthracene	2.2	0.37		mg/Kg-dry	1	7/1/2013
Fluoranthene	18	0.37		mg/Kg-dry	1	7/1/2013
Fluorene	0.55	0.37		mg/Kg-dry	1	7/1/2013
Indeno(1,2,3-cd)pyrene	4.2	0.37		mg/Kg-dry	1	7/1/2013
Naphthalene	ND	0.37		mg/Kg-dry	1	7/1/2013
Phenanthrene	6.5	0.37		mg/Kg-dry	1	7/1/2013
Pyrene	16	0.37		mg/Kg-dry	1	7/1/2013
Volatile Organic Compounds by GC/MS	**SW5035/8260B**			Prep Date: **6/28/2013**		Analyst: **PS**
Acetone	ND	0.081		mg/Kg-dry	1	7/1/2013
Benzene	ND	0.0054		mg/Kg-dry	1	7/1/2013
Bromodichloromethane	ND	0.0054		mg/Kg-dry	1	7/1/2013
Bromoform	ND	0.0054		mg/Kg-dry	1	7/1/2013
Bromomethane	ND	0.011		mg/Kg-dry	1	7/1/2013
2-Butanone	ND	0.081		mg/Kg-dry	1	7/1/2013
Carbon disulfide	ND	0.054		mg/Kg-dry	1	7/1/2013
Carbon tetrachloride	ND	0.0054		mg/Kg-dry	1	7/1/2013
Chlorobenzene	ND	0.0054		mg/Kg-dry	1	7/1/2013
Chloroethane	ND	0.011		mg/Kg-dry	1	7/1/2013

Qualifiers:
ND - Not Detected at the Reporting Limit
J - Analyte detected below quantitation limits
B - Analyte detected in the associated Method Blank
HT - Sample received past holding time
* - Non-accredited parameter
RL - Reporting / Quantitation Limit for the analysis
S - Spike Recovery outside accepted recovery limits
R - RPD outside accepted recovery limits
E - Value above quantitation range
H - Holding time exceeded

STAT Analysis Corporation
2242 West Harrison St., Suite 200, Chicago, IL 60612-3766
Tel: (312) 733-0551 Fax: (312) 733-2386 STATinfo@STATAnalysis.com
Accreditation Numbers: IEPA ELAP 100445; ORELAP IL300001; AIHA 101160; NVLAP LabCode 101202

Date Reported: September 30, 2013
Date Printed: September 30, 2013

Client: Terracon Consultants, Inc.
Lab Order: 13060930
Project: A2137008, 650 West 83rd Street, Chicago IL
Lab ID: 13060930-009

Client Sample ID: B18 (1-3)
Collection Date 6/26/2013 1:20:00 PM
Matrix: Soil

Analyses	Result	RL	Qualifier	Units	DF	Date Analyzed
Volatile Organic Compounds by GC/MS	**SW5035/8260B**			Prep Date: **6/28/2013**		Analyst: **PS**
Chloroform	ND	0.0054		mg/Kg-dry	1	7/1/2013
Chloromethane	ND	0.011		mg/Kg-dry	1	7/1/2013
Dibromochloromethane	ND	0.0054		mg/Kg-dry	1	7/1/2013
1,1-Dichloroethane	ND	0.0054		mg/Kg-dry	1	7/1/2013
1,2-Dichloroethane	ND	0.0054		mg/Kg-dry	1	7/1/2013
1,1-Dichloroethene	ND	0.0054		mg/Kg-dry	1	7/1/2013
cis-1,2-Dichloroethene	ND	0.0054		mg/Kg-dry	1	7/1/2013
trans-1,2-Dichloroethene	ND	0.0054		mg/Kg-dry	1	7/1/2013
1,2-Dichloropropane	ND	0.0054		mg/Kg-dry	1	7/1/2013
cis-1,3-Dichloropropene	ND	0.0022		mg/Kg-dry	1	7/1/2013
trans-1,3-Dichloropropene	ND	0.0022		mg/Kg-dry	1	7/1/2013
Ethylbenzene	ND	0.0054		mg/Kg-dry	1	7/1/2013
2-Hexanone	ND	0.022		mg/Kg-dry	1	7/1/2013
4-Methyl-2-pentanone	ND	0.022		mg/Kg-dry	1	7/1/2013
Methylene chloride	ND	0.011		mg/Kg-dry	1	7/1/2013
Methyl tert-butyl ether	ND	0.0054		mg/Kg-dry	1	7/1/2013
Styrene	ND	0.0054		mg/Kg-dry	1	7/1/2013
1,1,2,2-Tetrachloroethane	ND	0.0054		mg/Kg-dry	1	7/1/2013
Tetrachloroethene	ND	0.0054		mg/Kg-dry	1	7/1/2013
Toluene	ND	0.0054		mg/Kg-dry	1	7/1/2013
1,1,1-Trichloroethane	ND	0.0054		mg/Kg-dry	1	7/1/2013
1,1,2-Trichloroethane	ND	0.0054		mg/Kg-dry	1	7/1/2013
Trichloroethene	ND	0.0054		mg/Kg-dry	1	7/1/2013
Vinyl chloride	ND	0.0054		mg/Kg-dry	1	7/1/2013
Xylenes, Total	ND	0.016		mg/Kg-dry	1	7/1/2013
Percent Moisture	**D2974**			Prep Date: **6/27/2013**		Analyst: **SDA**
Percent Moisture	11.6	0.2	*	wt%	1	6/27/2013

Qualifiers:
ND - Not Detected at the Reporting Limit
J - Analyte detected below quantitation limits
B - Analyte detected in the associated Method Blank
HT - Sample received past holding time
* - Non-accredited parameter
RL - Reporting / Quantitation Limit for the analysis
S - Spike Recovery outside accepted recovery limits
R - RPD outside accepted recovery limits
E - Value above quantitation range
H - Holding time exceeded

STAT Analysis Corporation
2242 West Harrison St., Suite 200, Chicago, IL 60612-3766
Tel: (312) 733-0551 Fax: (312) 733-2386 STATinfo@STATAnalysis.com
Accreditation Numbers: IEPA ELAP 100445; ORELAP IL300001; AIHA 101160; NVLAP LabCode 101202

Date Reported: September 30, 2013
Date Printed: September 30, 2013

Client: Terracon Consultants, Inc.
Lab Order: 13060930
Project: A2137008, 650 West 83rd Street, Chicago IL
Lab ID: 13060930-010

Client Sample ID: B18 (4-6)
Collection Date 6/26/2013 1:35:00 PM
Matrix: Soil

Analyses	Result	RL	Qualifier	Units	DF	Date Analyzed
Mercury	**SW7471A**			Prep Date: **7/3/2013**		Analyst: **LB**
Mercury	0.053	0.026		mg/Kg-dry	1	7/3/2013
Metals by ICP/MS	**SW6020 (SW3050B)**			Prep Date: **7/1/2013**		Analyst: **JG**
Arsenic	3.3	1.3		mg/Kg-dry	10	7/2/2013
Barium	69	1.3		mg/Kg-dry	10	7/2/2013
Cadmium	ND	0.63		mg/Kg-dry	10	7/2/2013
Chromium	7.9	1.3		mg/Kg-dry	10	7/2/2013
Lead	310	0.63		mg/Kg-dry	10	7/2/2013
Selenium	ND	1.3		mg/Kg-dry	10	7/2/2013
Silver	ND	1.3		mg/Kg-dry	10	7/2/2013
Semivolatile Organic Compounds by GC/MS	**SW8270C (SW3550B)**			Prep Date: **6/27/2013**		Analyst: **DM**
Acenaphthene	ND	0.043		mg/Kg-dry	1	7/1/2013
Acenaphthylene	ND	0.043		mg/Kg-dry	1	7/1/2013
Anthracene	ND	0.043		mg/Kg-dry	1	7/1/2013
Benz(a)anthracene	ND	0.043		mg/Kg-dry	1	7/1/2013
Benzo(a)pyrene	ND	0.043		mg/Kg-dry	1	7/1/2013
Benzo(b)fluoranthene	ND	0.043		mg/Kg-dry	1	7/1/2013
Benzo(g,h,i)perylene	ND	0.043		mg/Kg-dry	1	7/1/2013
Benzo(k)fluoranthene	ND	0.043		mg/Kg-dry	1	7/1/2013
Chrysene	ND	0.043		mg/Kg-dry	1	7/1/2013
Dibenz(a,h)anthracene	ND	0.043		mg/Kg-dry	1	7/1/2013
Fluoranthene	0.044	0.043		mg/Kg-dry	1	7/1/2013
Fluorene	ND	0.043		mg/Kg-dry	1	7/1/2013
Indeno(1,2,3-cd)pyrene	ND	0.043		mg/Kg-dry	1	7/1/2013
Naphthalene	ND	0.043		mg/Kg-dry	1	7/1/2013
Phenanthrene	0.049	0.043		mg/Kg-dry	1	7/1/2013
Pyrene	0.054	0.043		mg/Kg-dry	1	7/1/2013
BTEX by GC/MS	**SW5035/8260B**			Prep Date: **6/28/2013**		Analyst: **ERP**
Benzene	ND	0.0056		mg/Kg-dry	1	7/2/2013
Ethylbenzene	ND	0.0056		mg/Kg-dry	1	7/2/2013
Toluene	ND	0.0056		mg/Kg-dry	1	7/2/2013
Xylenes, Total	ND	0.017		mg/Kg-dry	1	7/2/2013
Percent Moisture	**D2974**			Prep Date: **6/27/2013**		Analyst: **SDA**
Percent Moisture	24.0	0.2	*	wt%	1	6/27/2013

Qualifiers:
ND - Not Detected at the Reporting Limit
J - Analyte detected below quantitation limits
B - Analyte detected in the associated Method Blank
HT - Sample received past holding time
* - Non-accredited parameter
RL - Reporting / Quantitation Limit for the analysis
S - Spike Recovery outside accepted recovery limits
R - RPD outside accepted recovery limits
E - Value above quantitation range
H - Holding time exceeded

STAT Analysis Corporation
2242 West Harrison St., Suite 200, Chicago, IL 60612-3766
Tel: (312) 733-0551 Fax: (312) 733-2386 STATinfo@STATAnalysis.com
Accreditation Numbers: IEPA ELAP 100445; ORELAP IL300001; AIHA 101160; NVLAP LabCode 101202

Date Reported: September 30, 2013
Date Printed: September 30, 2013

Client: Terracon Consultants, Inc.
Lab Order: 13060930
Project: A2137008, 650 West 83rd Street, Chicago IL
Lab ID: 13060930-011

Client Sample ID: B25 (1-3)
Collection Date 6/26/2013 12:40:00 PM
Matrix: Soil

Analyses	Result	RL	Qualifier	Units	DF	Date Analyzed
Mercury	**SW7471A**			Prep Date: **7/3/2013**		Analyst: **LB**
Mercury	0.17	0.022		mg/Kg-dry	1	7/3/2013
Metals by ICP/MS	**SW6020 (SW3050B)**			Prep Date: **7/1/2013**		Analyst: **JG**
Arsenic	11	1.2		mg/Kg-dry	10	7/2/2013
Barium	120	1.2		mg/Kg-dry	10	7/2/2013
Cadmium	ND	0.61		mg/Kg-dry	10	7/2/2013
Chromium	15	1.2		mg/Kg-dry	10	7/2/2013
Lead	150	0.61		mg/Kg-dry	10	7/2/2013
Selenium	ND	1.2		mg/Kg-dry	10	7/2/2013
Silver	ND	1.2		mg/Kg-dry	10	7/2/2013
Semivolatile Organic Compounds by GC/MS	**SW8270C (SW3550B)**			Prep Date: **6/27/2013**		Analyst: **DM**
Acenaphthene	0.17	0.038		mg/Kg-dry	1	7/1/2013
Acenaphthylene	0.21	0.038		mg/Kg-dry	1	7/1/2013
Anthracene	0.99	0.038		mg/Kg-dry	1	7/1/2013
Benz(a)anthracene	2.7	0.038		mg/Kg-dry	1	7/1/2013
Benzo(a)pyrene	2.7	0.038		mg/Kg-dry	1	7/1/2013
Benzo(b)fluoranthene	2.3	0.038		mg/Kg-dry	1	7/1/2013
Benzo(g,h,i)perylene	1.4	0.038		mg/Kg-dry	1	7/1/2013
Benzo(k)fluoranthene	2.1	0.038		mg/Kg-dry	1	7/1/2013
Chrysene	2.6	0.038		mg/Kg-dry	1	7/1/2013
Dibenz(a,h)anthracene	0.65	0.038		mg/Kg-dry	1	7/1/2013
Fluoranthene	6.1	0.19		mg/Kg-dry	5	7/3/2013
Fluorene	0.29	0.038		mg/Kg-dry	1	7/1/2013
Indeno(1,2,3-cd)pyrene	1.2	0.038		mg/Kg-dry	1	7/1/2013
Naphthalene	0.06	0.038		mg/Kg-dry	1	7/1/2013
Phenanthrene	3.1	0.038		mg/Kg-dry	1	7/1/2013
Pyrene	4.9	0.19		mg/Kg-dry	5	7/3/2013
BTEX by GC/MS	**SW5035/8260B**			Prep Date: **6/28/2013**		Analyst: **PS**
Benzene	ND	0.0055		mg/Kg-dry	1	7/1/2013
Ethylbenzene	ND	0.0055		mg/Kg-dry	1	7/1/2013
Toluene	ND	0.0055		mg/Kg-dry	1	7/1/2013
Xylenes, Total	ND	0.016		mg/Kg-dry	1	7/1/2013
Percent Moisture	**D2974**			Prep Date: **6/27/2013**		Analyst: **SDA**
Percent Moisture	13.8	0.2	*	wt%	1	6/27/2013

Qualifiers:
ND - Not Detected at the Reporting Limit
J - Analyte detected below quantitation limits
B - Analyte detected in the associated Method Blank
HT - Sample received past holding time
* - Non-accredited parameter
RL - Reporting / Quantitation Limit for the analysis
S - Spike Recovery outside accepted recovery limits
R - RPD outside accepted recovery limits
E - Value above quantitation range
H - Holding time exceeded

STAT Analysis Corporation
2242 West Harrison St., Suite 200, Chicago, IL 60612-3766
Tel: (312) 733-0551 Fax: (312) 733-2386 STATinfo@STATAnalysis.com
Accreditation Numbers: IEPA ELAP 100445; ORELAP IL300001; AIHA 101160; NVLAP LabCode 101202

Date Reported: September 30, 2013
Date Printed: September 30, 2013

Client: Terracon Consultants, Inc.
Lab Order: 13060930
Project: A2137008, 650 West 83rd Street, Chicago IL
Lab ID: 13060930-012

Client Sample ID: B25 (4-6)
Collection Date 6/26/2013 1:00:00 PM
Matrix: Soil

Analyses	Result	RL	Qualifier	Units	DF	Date Analyzed
Mercury	**SW7471A**			Prep Date: **7/3/2013**		Analyst: **LB**
Mercury	0.046	0.024		mg/Kg-dry	1	7/3/2013
Metals by ICP/MS	**SW6020 (SW3050B)**			Prep Date: **7/1/2013**		Analyst: **JG**
Arsenic	6.5	1.3		mg/Kg-dry	10	7/2/2013
Barium	530	1.3		mg/Kg-dry	10	7/2/2013
Cadmium	1.4	0.63		mg/Kg-dry	10	7/2/2013
Chromium	18	1.3		mg/Kg-dry	10	7/2/2013
Lead	180	0.63		mg/Kg-dry	10	7/2/2013
Selenium	ND	1.3		mg/Kg-dry	10	7/2/2013
Silver	ND	1.3		mg/Kg-dry	10	7/2/2013
Semivolatile Organic Compounds by GC/MS	**SW8270C (SW3550B)**			Prep Date: **6/28/2013**		Analyst: **DM**
Acenaphthene	0.46	0.043		mg/Kg-dry	1	7/1/2013
Acenaphthylene	0.2	0.043		mg/Kg-dry	1	7/1/2013
Anthracene	1.4	0.043		mg/Kg-dry	1	7/1/2013
Benz(a)anthracene	2.3	0.043		mg/Kg-dry	1	7/1/2013
Benzo(a)pyrene	2	0.043		mg/Kg-dry	1	7/1/2013
Benzo(b)fluoranthene	2.1	0.043		mg/Kg-dry	1	7/1/2013
Benzo(g,h,i)perylene	0.94	0.043		mg/Kg-dry	1	7/1/2013
Benzo(k)fluoranthene	1.4	0.043		mg/Kg-dry	1	7/1/2013
Chrysene	2.3	0.043		mg/Kg-dry	1	7/1/2013
Dibenz(a,h)anthracene	0.54	0.043		mg/Kg-dry	1	7/1/2013
Fluoranthene	5.3	0.22		mg/Kg-dry	5	7/3/2013
Fluorene	1.4	0.043		mg/Kg-dry	1	7/1/2013
Indeno(1,2,3-cd)pyrene	0.86	0.043		mg/Kg-dry	1	7/1/2013
Naphthalene	1.2	0.043		mg/Kg-dry	1	7/1/2013
Phenanthrene	5.7	0.22		mg/Kg-dry	5	7/3/2013
Pyrene	4.3	0.043		mg/Kg-dry	1	7/1/2013
BTEX by GC/MS	**SW5035/8260B**			Prep Date: **6/28/2013**		Analyst: **PS**
Benzene	ND	0.0054		mg/Kg-dry	1	7/1/2013
Ethylbenzene	ND	0.0054		mg/Kg-dry	1	7/1/2013
Toluene	ND	0.0054		mg/Kg-dry	1	7/1/2013
Xylenes, Total	ND	0.016		mg/Kg-dry	1	7/1/2013
Percent Moisture	**D2974**			Prep Date: **6/27/2013**		Analyst: **SDA**
Percent Moisture	24.1	0.2	*	wt%	1	6/27/2013

Qualifiers:
ND - Not Detected at the Reporting Limit
J - Analyte detected below quantitation limits
B - Analyte detected in the associated Method Blank
HT - Sample received past holding time
* - Non-accredited parameter
RL - Reporting / Quantitation Limit for the analysis
S - Spike Recovery outside accepted recovery limits
R - RPD outside accepted recovery limits
E - Value above quantitation range
H - Holding time exceeded

STAT Analysis Corporation
2242 West Harrison St., Suite 200, Chicago, IL 60612-3766
Tel: (312) 733-0551 Fax: (312) 733-2386 STATinfo@STATAnalysis.com
Accreditation Numbers: IEPA ELAP 100445; ORELAP IL300001; AIHA 101160; NVLAP LabCode 101202

Date Reported: September 30, 2013
Date Printed: September 30, 2013

Client: Terracon Consultants, Inc.
Lab Order: 13060930
Project: A2137008, 650 West 83rd Street, Chicago IL
Lab ID: 13060930-013

Client Sample ID: B33 (1-3)
Collection Date 6/26/2013 12:00:00 PM
Matrix: Soil

Analyses	Result	RL	Qualifier	Units	DF	Date Analyzed
Mercury	**SW7471A**			Prep Date: **7/3/2013**		Analyst: **LB**
Mercury	0.054	0.023		mg/Kg-dry	1	7/3/2013
Metals by ICP/MS	**SW6020 (SW3050B)**			Prep Date: **7/1/2013**		Analyst: **JG**
Arsenic	6.3	1		mg/Kg-dry	10	7/2/2013
Barium	64	1		mg/Kg-dry	10	7/2/2013
Cadmium	0.52	0.51		mg/Kg-dry	10	7/2/2013
Chromium	17	1		mg/Kg-dry	10	7/2/2013
Lead	110	0.51		mg/Kg-dry	10	7/2/2013
Selenium	ND	1		mg/Kg-dry	10	7/2/2013
Silver	ND	1		mg/Kg-dry	10	7/2/2013
Semivolatile Organic Compounds by GC/MS	**SW8270C (SW3550B)**			Prep Date: **6/28/2013**		Analyst: **DM**
Acenaphthene	0.071	0.038		mg/Kg-dry	1	7/1/2013
Acenaphthylene	0.061	0.038		mg/Kg-dry	1	7/1/2013
Anthracene	0.31	0.038		mg/Kg-dry	1	7/1/2013
Benz(a)anthracene	0.79	0.038		mg/Kg-dry	1	7/1/2013
Benzo(a)pyrene	0.76	0.038		mg/Kg-dry	1	7/1/2013
Benzo(b)fluoranthene	0.72	0.038		mg/Kg-dry	1	7/1/2013
Benzo(g,h,i)perylene	0.45	0.038		mg/Kg-dry	1	7/1/2013
Benzo(k)fluoranthene	0.62	0.038		mg/Kg-dry	1	7/1/2013
Chrysene	0.8	0.038		mg/Kg-dry	1	7/1/2013
Dibenz(a,h)anthracene	0.24	0.038		mg/Kg-dry	1	7/1/2013
Fluoranthene	1.8	0.038		mg/Kg-dry	1	7/1/2013
Fluorene	0.13	0.038		mg/Kg-dry	1	7/1/2013
Indeno(1,2,3-cd)pyrene	0.39	0.038		mg/Kg-dry	1	7/1/2013
Naphthalene	0.049	0.038		mg/Kg-dry	1	7/1/2013
Phenanthrene	1.1	0.038		mg/Kg-dry	1	7/1/2013
Pyrene	1.5	0.038		mg/Kg-dry	1	7/1/2013
BTEX by GC/MS	**SW5035/8260B**			Prep Date: **6/28/2013**		Analyst: **PS**
Benzene	ND	0.0055		mg/Kg-dry	1	7/1/2013
Ethylbenzene	ND	0.0055		mg/Kg-dry	1	7/1/2013
Toluene	ND	0.0055		mg/Kg-dry	1	7/1/2013
Xylenes, Total	ND	0.017		mg/Kg-dry	1	7/1/2013
Percent Moisture	**D2974**			Prep Date: **6/27/2013**		Analyst: **SDA**
Percent Moisture	13.6	0.2	*	wt%	1	6/27/2013

Qualifiers:
ND - Not Detected at the Reporting Limit
J - Analyte detected below quantitation limits
B - Analyte detected in the associated Method Blank
HT - Sample received past holding time
* - Non-accredited parameter
RL - Reporting / Quantitation Limit for the analysis
S - Spike Recovery outside accepted recovery limits
R - RPD outside accepted recovery limits
E - Value above quantitation range
H - Holding time exceeded

STAT Analysis Corporation
2242 West Harrison St., Suite 200, Chicago, IL 60612-3766
Tel: (312) 733-0551 Fax: (312) 733-2386 STATinfo@STATAnalysis.com
Accreditation Numbers: IEPA ELAP 100445; ORELAP IL300001; AIHA 101160; NVLAP LabCode 101202

Date Reported: September 30, 2013
Date Printed: September 30, 2013

Client: Terracon Consultants, Inc.
Lab Order: 13060930
Project: A2137008, 650 West 83rd Street, Chicago IL
Lab ID: 13060930-014

Client Sample ID: B33 (4-6)
Collection Date 6/26/2013 12:30:00 PM
Matrix: Soil

Analyses	Result	RL	Qualifier	Units	DF	Date Analyzed
Mercury	**SW7471A**			Prep Date: **7/3/2013**		Analyst: **LB**
Mercury	0.14	0.024		mg/Kg-dry	1	7/3/2013
Metals by ICP/MS	**SW6020 (SW3050B)**			Prep Date: **7/1/2013**		Analyst: **JG**
Arsenic	6.4	1.3		mg/Kg-dry	10	7/2/2013
Barium	110	1.3		mg/Kg-dry	10	7/2/2013
Cadmium	ND	0.64		mg/Kg-dry	10	7/2/2013
Chromium	9.8	1.3		mg/Kg-dry	10	7/2/2013
Lead	44	0.64		mg/Kg-dry	10	7/2/2013
Selenium	ND	1.3		mg/Kg-dry	10	7/2/2013
Silver	ND	1.3		mg/Kg-dry	10	7/2/2013
Semivolatile Organic Compounds by GC/MS	**SW8270C (SW3550B)**			Prep Date: **6/28/2013**		Analyst: **DM**
Acenaphthene	0.069	0.041		mg/Kg-dry	1	7/1/2013
Acenaphthylene	0.14	0.041		mg/Kg-dry	1	7/1/2013
Anthracene	0.5	0.041		mg/Kg-dry	1	7/1/2013
Benz(a)anthracene	1.6	0.041		mg/Kg-dry	1	7/1/2013
Benzo(a)pyrene	1.4	0.041		mg/Kg-dry	1	7/1/2013
Benzo(b)fluoranthene	1.3	0.041		mg/Kg-dry	1	7/1/2013
Benzo(g,h,i)perylene	0.77	0.041		mg/Kg-dry	1	7/1/2013
Benzo(k)fluoranthene	1.1	0.041		mg/Kg-dry	1	7/1/2013
Chrysene	1.5	0.041		mg/Kg-dry	1	7/1/2013
Dibenz(a,h)anthracene	0.38	0.041		mg/Kg-dry	1	7/1/2013
Fluoranthene	3.5	0.041		mg/Kg-dry	1	7/1/2013
Fluorene	0.16	0.041		mg/Kg-dry	1	7/1/2013
Indeno(1,2,3-cd)pyrene	0.69	0.041		mg/Kg-dry	1	7/1/2013
Naphthalene	ND	0.041		mg/Kg-dry	1	7/1/2013
Phenanthrene	1.6	0.041		mg/Kg-dry	1	7/1/2013
Pyrene	2.9	0.041		mg/Kg-dry	1	7/1/2013
Volatile Organic Compounds by GC/MS	**SW5035/8260B**			Prep Date: **6/28/2013**		Analyst: **PS**
Acetone	ND	0.072		mg/Kg-dry	1	7/1/2013
Benzene	ND	0.0048		mg/Kg-dry	1	7/1/2013
Bromodichloromethane	ND	0.0048		mg/Kg-dry	1	7/1/2013
Bromoform	ND	0.0048		mg/Kg-dry	1	7/1/2013
Bromomethane	ND	0.0096		mg/Kg-dry	1	7/1/2013
2-Butanone	ND	0.072		mg/Kg-dry	1	7/1/2013
Carbon disulfide	ND	0.048		mg/Kg-dry	1	7/1/2013
Carbon tetrachloride	ND	0.0048		mg/Kg-dry	1	7/1/2013
Chlorobenzene	ND	0.0048		mg/Kg-dry	1	7/1/2013
Chloroethane	ND	0.0096		mg/Kg-dry	1	7/1/2013

Qualifiers:
- ND - Not Detected at the Reporting Limit
- J - Analyte detected below quantitation limits
- B - Analyte detected in the associated Method Blank
- HT - Sample received past holding time
- * - Non-accredited parameter
- RL - Reporting / Quantitation Limit for the analysis
- S - Spike Recovery outside accepted recovery limits
- R - RPD outside accepted recovery limits
- E - Value above quantitation range
- H - Holding time exceeded

STAT Analysis Corporation
2242 West Harrison St., Suite 200, Chicago, IL 60612-3766
Tel: (312) 733-0551 Fax: (312) 733-2386 STATinfo@STATAnalysis.com
Accreditation Numbers: IEPA ELAP 100445; ORELAP IL300001; AIHA 101160; NVLAP LabCode 101202

Date Reported: September 30, 2013
Date Printed: September 30, 2013

Client: Terracon Consultants, Inc.
Lab Order: 13060930
Project: A2137008, 650 West 83rd Street, Chicago IL
Lab ID: 13060930-014

Client Sample ID: B33 (4-6)
Collection Date 6/26/2013 12:30:00 PM
Matrix: Soil

Analyses	Result	RL	Qualifier	Units	DF	Date Analyzed
Volatile Organic Compounds by GC/MS	**SW5035/8260B**			Prep Date: **6/28/2013**		Analyst: **PS**
Chloroform	ND	0.0048		mg/Kg-dry	1	7/1/2013
Chloromethane	ND	0.0096		mg/Kg-dry	1	7/1/2013
Dibromochloromethane	ND	0.0048		mg/Kg-dry	1	7/1/2013
1,1-Dichloroethane	ND	0.0048		mg/Kg-dry	1	7/1/2013
1,2-Dichloroethane	ND	0.0048		mg/Kg-dry	1	7/1/2013
1,1-Dichloroethene	ND	0.0048		mg/Kg-dry	1	7/1/2013
cis-1,2-Dichloroethene	ND	0.0048		mg/Kg-dry	1	7/1/2013
trans-1,2-Dichloroethene	ND	0.0048		mg/Kg-dry	1	7/1/2013
1,2-Dichloropropane	ND	0.0048		mg/Kg-dry	1	7/1/2013
cis-1,3-Dichloropropene	ND	0.0019		mg/Kg-dry	1	7/1/2013
trans-1,3-Dichloropropene	ND	0.0019		mg/Kg-dry	1	7/1/2013
Ethylbenzene	ND	0.0048		mg/Kg-dry	1	7/1/2013
2-Hexanone	ND	0.019		mg/Kg-dry	1	7/1/2013
4-Methyl-2-pentanone	ND	0.019		mg/Kg-dry	1	7/1/2013
Methylene chloride	ND	0.0096		mg/Kg-dry	1	7/1/2013
Methyl tert-butyl ether	ND	0.0048		mg/Kg-dry	1	7/1/2013
Styrene	ND	0.0048		mg/Kg-dry	1	7/1/2013
1,1,2,2-Tetrachloroethane	ND	0.0048		mg/Kg-dry	1	7/1/2013
Tetrachloroethene	ND	0.0048		mg/Kg-dry	1	7/1/2013
Toluene	ND	0.0048		mg/Kg-dry	1	7/1/2013
1,1,1-Trichloroethane	ND	0.0048		mg/Kg-dry	1	7/1/2013
1,1,2-Trichloroethane	ND	0.0048		mg/Kg-dry	1	7/1/2013
Trichloroethene	ND	0.0048		mg/Kg-dry	1	7/1/2013
Vinyl chloride	ND	0.0048		mg/Kg-dry	1	7/1/2013
Xylenes, Total	ND	0.014		mg/Kg-dry	1	7/1/2013
Percent Moisture	**D2974**			Prep Date: **6/27/2013**		Analyst: **SDA**
Percent Moisture	19.3	0.2	*	wt%	1	6/27/2013

Qualifiers:
ND - Not Detected at the Reporting Limit
J - Analyte detected below quantitation limits
B - Analyte detected in the associated Method Blank
HT - Sample received past holding time
* - Non-accredited parameter
RL - Reporting / Quantitation Limit for the analysis
S - Spike Recovery outside accepted recovery limits
R - RPD outside accepted recovery limits
E - Value above quantitation range
H - Holding time exceeded

STAT Analysis Corporation
2242 West Harrison St., Suite 200, Chicago, IL 60612-3766
Tel: (312) 733-0551 Fax: (312) 733-2386 STATinfo@STATAnalysis.com
Accreditation Numbers: IEPA ELAP 100445; ORELAP IL300001; AIHA 101160; NVLAP LabCode 101202

Date Reported: September 30, 2013
Date Printed: September 30, 2013

Client: Terracon Consultants, Inc.
Lab Order: 13060930
Project: A2137008, 650 West 83rd Street, Chicago IL
Lab ID: 13060930-015

Client Sample ID: B32 (1-3)
Collection Date 6/26/2013 11:30:00 AM
Matrix: Soil

Analyses	Result	RL	Qualifier	Units	DF	Date Analyzed
Mercury	**SW7471A**			Prep Date: **7/3/2013**		Analyst: **LB**
Mercury	0.12	0.021		mg/Kg-dry	1	7/3/2013
Metals by ICP/MS	**SW6020 (SW3050B)**			Prep Date: **7/1/2013**		Analyst: **JG**
Arsenic	8.8	1.1		mg/Kg-dry	10	7/2/2013
Barium	200	1.1		mg/Kg-dry	10	7/2/2013
Cadmium	0.81	0.55		mg/Kg-dry	10	7/2/2013
Chromium	16	1.1		mg/Kg-dry	10	7/2/2013
Lead	260	0.55		mg/Kg-dry	10	7/2/2013
Selenium	ND	1.1		mg/Kg-dry	10	7/2/2013
Silver	ND	1.1		mg/Kg-dry	10	7/2/2013
Semivolatile Organic Compounds by GC/MS	**SW8270C (SW3550B)**			Prep Date: **6/28/2013**		Analyst: **DM**
Acenaphthene	0.1	0.038		mg/Kg-dry	1	7/1/2013
Acenaphthylene	0.19	0.038		mg/Kg-dry	1	7/1/2013
Anthracene	0.51	0.038		mg/Kg-dry	1	7/1/2013
Benz(a)anthracene	1.8	0.038		mg/Kg-dry	1	7/1/2013
Benzo(a)pyrene	2.1	0.038		mg/Kg-dry	1	7/1/2013
Benzo(b)fluoranthene	2	0.038		mg/Kg-dry	1	7/1/2013
Benzo(g,h,i)perylene	1.2	0.038		mg/Kg-dry	1	7/1/2013
Benzo(k)fluoranthene	1.6	0.038		mg/Kg-dry	1	7/1/2013
Chrysene	2	0.038		mg/Kg-dry	1	7/1/2013
Dibenz(a,h)anthracene	0.57	0.038		mg/Kg-dry	1	7/1/2013
Fluoranthene	3.8	0.038		mg/Kg-dry	1	7/1/2013
Fluorene	0.12	0.038		mg/Kg-dry	1	7/1/2013
Indeno(1,2,3-cd)pyrene	1.1	0.038		mg/Kg-dry	1	7/1/2013
Naphthalene	0.095	0.038		mg/Kg-dry	1	7/1/2013
Phenanthrene	1.8	0.038		mg/Kg-dry	1	7/1/2013
Pyrene	3.5	0.038		mg/Kg-dry	1	7/1/2013
BTEX by GC/MS	**SW5035/8260B**			Prep Date: **6/28/2013**		Analyst: **PS**
Benzene	ND	0.0055		mg/Kg-dry	1	7/1/2013
Ethylbenzene	ND	0.0055		mg/Kg-dry	1	7/1/2013
Toluene	ND	0.0055		mg/Kg-dry	1	7/1/2013
Xylenes, Total	ND	0.017		mg/Kg-dry	1	7/1/2013
Percent Moisture	**D2974**			Prep Date: **6/27/2013**		Analyst: **SDA**
Percent Moisture	13.3	0.2	*	wt%	1	6/27/2013

Qualifiers:
ND - Not Detected at the Reporting Limit
J - Analyte detected below quantitation limits
B - Analyte detected in the associated Method Blank
HT - Sample received past holding time
* - Non-accredited parameter
RL - Reporting / Quantitation Limit for the analysis
S - Spike Recovery outside accepted recovery limits
R - RPD outside accepted recovery limits
E - Value above quantitation range
H - Holding time exceeded

STAT Analysis Corporation
2242 West Harrison St., Suite 200, Chicago, IL 60612-3766
Tel: (312) 733-0551 Fax: (312) 733-2386 STATinfo@STATAnalysis.com
Accreditation Numbers: IEPA ELAP 100445; ORELAP IL300001; AIHA 101160; NVLAP LabCode 101202

Date Reported: September 30, 2013
Date Printed: September 30, 2013

Client: Terracon Consultants, Inc.
Lab Order: 13060930
Project: A2137008, 650 West 83rd Street, Chicago IL
Lab ID: 13060930-016

Client Sample ID: B32 (6-8)
Collection Date 6/26/2013 11:50:00 AM
Matrix: Soil

Analyses	Result	RL	Qualifier	Units	DF	Date Analyzed
Mercury	**SW7471A**			Prep Date: **7/3/2013**		Analyst: **LB**
Mercury	0.039	0.031		mg/Kg-dry	1	7/3/2013
Metals by ICP/MS	**SW6020 (SW3050B)**			Prep Date: **7/1/2013**		Analyst: **JG**
Arsenic	6.8	1.8		mg/Kg-dry	10	7/2/2013
Barium	110	1.8		mg/Kg-dry	10	7/2/2013
Cadmium	ND	0.9		mg/Kg-dry	10	7/2/2013
Chromium	28	1.8		mg/Kg-dry	10	7/2/2013
Lead	29	0.9		mg/Kg-dry	10	7/2/2013
Selenium	ND	1.8		mg/Kg-dry	10	7/2/2013
Silver	ND	1.8		mg/Kg-dry	10	7/2/2013
Semivolatile Organic Compounds by GC/MS	**SW8270C (SW3550B)**			Prep Date: **6/28/2013**		Analyst: **DM**
Acenaphthene	ND	0.058		mg/Kg-dry	1	7/1/2013
Acenaphthylene	ND	0.058		mg/Kg-dry	1	7/1/2013
Anthracene	ND	0.058		mg/Kg-dry	1	7/1/2013
Benz(a)anthracene	ND	0.058		mg/Kg-dry	1	7/1/2013
Benzo(a)pyrene	ND	0.058		mg/Kg-dry	1	7/1/2013
Benzo(b)fluoranthene	ND	0.058		mg/Kg-dry	1	7/1/2013
Benzo(g,h,i)perylene	ND	0.058		mg/Kg-dry	1	7/1/2013
Benzo(k)fluoranthene	ND	0.058		mg/Kg-dry	1	7/1/2013
Chrysene	ND	0.058		mg/Kg-dry	1	7/1/2013
Dibenz(a,h)anthracene	ND	0.058		mg/Kg-dry	1	7/1/2013
Fluoranthene	ND	0.058		mg/Kg-dry	1	7/1/2013
Fluorene	ND	0.058		mg/Kg-dry	1	7/1/2013
Indeno(1,2,3-cd)pyrene	ND	0.058		mg/Kg-dry	1	7/1/2013
Naphthalene	ND	0.058		mg/Kg-dry	1	7/1/2013
Phenanthrene	ND	0.058		mg/Kg-dry	1	7/1/2013
Pyrene	ND	0.058		mg/Kg-dry	1	7/1/2013
BTEX by GC/MS	**SW5035/8260B**			Prep Date: **6/28/2013**		Analyst: **PS**
Benzene	ND	0.0089		mg/Kg-dry	1	7/1/2013
Ethylbenzene	ND	0.0089		mg/Kg-dry	1	7/1/2013
Toluene	ND	0.0089		mg/Kg-dry	1	7/1/2013
Xylenes, Total	ND	0.027		mg/Kg-dry	1	7/1/2013
Percent Moisture	**D2974**			Prep Date: **6/27/2013**		Analyst: **SDA**
Percent Moisture	42.9	0.2	*	wt%	1	6/27/2013

Qualifiers:
ND - Not Detected at the Reporting Limit
J - Analyte detected below quantitation limits
B - Analyte detected in the associated Method Blank
HT - Sample received past holding time
* - Non-accredited parameter
RL - Reporting / Quantitation Limit for the analysis
S - Spike Recovery outside accepted recovery limits
R - RPD outside accepted recovery limits
E - Value above quantitation range
H - Holding time exceeded

STAT Analysis Corporation
2242 West Harrison St., Suite 200, Chicago, IL 60612-3766
Tel: (312) 733-0551 Fax: (312) 733-2386 STATinfo@STATAnalysis.com
Accreditation Numbers: IEPA ELAP 100445; ORELAP IL300001; AIHA 101160; NVLAP LabCode 101202

Date Reported: September 30, 2013
Date Printed: September 30, 2013

Client: Terracon Consultants, Inc.
Lab Order: 13060930
Project: A2137008, 650 West 83rd Street, Chicago IL
Lab ID: 13060930-017

Client Sample ID: B35 (1-3)
Collection Date 6/26/2013 10:30:00 AM
Matrix: Soil

Analyses	Result	RL	Qualifier	Units	DF	Date Analyzed
Mercury	**SW7471A**			Prep Date: **7/3/2013**		Analyst: **LB**
Mercury	0.75	0.022		mg/Kg-dry	1	7/3/2013
Metals by ICP/MS	**SW6020 (SW3050B)**			Prep Date: **7/1/2013**		Analyst: **JG**
Arsenic	16	1.2		mg/Kg-dry	10	7/2/2013
Barium	660	1.2		mg/Kg-dry	10	7/2/2013
Cadmium	2.5	0.62		mg/Kg-dry	10	7/2/2013
Chromium	24	1.2		mg/Kg-dry	10	7/2/2013
Lead	680	0.62		mg/Kg-dry	10	7/2/2013
Selenium	ND	1.2		mg/Kg-dry	10	7/2/2013
Silver	ND	1.2		mg/Kg-dry	10	7/2/2013
Semivolatile Organic Compounds by GC/MS	**SW8270C (SW3550B)**			Prep Date: **6/28/2013**		Analyst: **DM**
Acenaphthene	5.6	0.4		mg/Kg-dry	10	7/3/2013
Acenaphthylene	1.2	0.04		mg/Kg-dry	1	7/1/2013
Anthracene	15	0.4		mg/Kg-dry	10	7/3/2013
Benz(a)anthracene	23	0.4		mg/Kg-dry	10	7/3/2013
Benzo(a)pyrene	21	0.4		mg/Kg-dry	10	7/3/2013
Benzo(b)fluoranthene	17	0.4		mg/Kg-dry	10	7/3/2013
Benzo(g,h,i)perylene	9.8	0.4		mg/Kg-dry	10	7/3/2013
Benzo(k)fluoranthene	18	0.4		mg/Kg-dry	10	7/3/2013
Chrysene	23	0.4		mg/Kg-dry	10	7/3/2013
Dibenz(a,h)anthracene	5.5	0.4		mg/Kg-dry	10	7/3/2013
Fluoranthene	48	2		mg/Kg-dry	50	7/3/2013
Fluorene	8.7	0.4		mg/Kg-dry	10	7/3/2013
Indeno(1,2,3-cd)pyrene	7.7	2		mg/Kg-dry	50	7/3/2013
Naphthalene	8.1	0.4		mg/Kg-dry	10	7/3/2013
Phenanthrene	46	0.4		mg/Kg-dry	10	7/3/2013
Pyrene	42	0.4		mg/Kg-dry	10	7/3/2013
BTEX by GC/MS	**SW5035/8260B**			Prep Date: **6/28/2013**		Analyst: **PS**
Benzene	ND	0.0052		mg/Kg-dry	1	7/1/2013
Ethylbenzene	ND	0.0052		mg/Kg-dry	1	7/1/2013
Toluene	ND	0.0052		mg/Kg-dry	1	7/1/2013
Xylenes, Total	ND	0.016		mg/Kg-dry	1	7/1/2013
Percent Moisture	**D2974**			Prep Date: **6/27/2013**		Analyst: **SDA**
Percent Moisture	18.3	0.2	*	wt%	1	6/27/2013

Qualifiers:

ND - Not Detected at the Reporting Limit
J - Analyte detected below quantitation limits
B - Analyte detected in the associated Method Blank
HT - Sample received past holding time
* - Non-accredited parameter
RL - Reporting / Quantitation Limit for the analysis
S - Spike Recovery outside accepted recovery limits
R - RPD outside accepted recovery limits
E - Value above quantitation range
H - Holding time exceeded

STAT Analysis Corporation
2242 West Harrison St., Suite 200, Chicago, IL 60612-3766
Tel: (312) 733-0551 Fax: (312) 733-2386 STATinfo@STATAnalysis.com
Accreditation Numbers: IEPA ELAP 100445; ORELAP IL300001; AIHA 101160; NVLAP LabCode 101202

Date Reported: September 30, 2013
Date Printed: September 30, 2013

Client: Terracon Consultants, Inc.
Lab Order: 13060930
Project: A2137008, 650 West 83rd Street, Chicago IL
Lab ID: 13060930-018

Client Sample ID: B35 (4-6)
Collection Date 6/26/2013 10:40:00 AM
Matrix: Soil

Analyses	Result	RL	Qualifier	Units	DF	Date Analyzed
Mercury	**SW7471A**			Prep Date: **7/3/2013**		Analyst: **LB**
Mercury	1.5	0.14		mg/Kg-dry	5	7/3/2013
Metals by ICP/MS	**SW6020 (SW3050B)**			Prep Date: **7/1/2013**		Analyst: **JG**
Arsenic	24	1.5		mg/Kg-dry	10	7/2/2013
Barium	1000	1.5		mg/Kg-dry	10	7/2/2013
Cadmium	6.6	0.77		mg/Kg-dry	10	7/2/2013
Chromium	39	1.5		mg/Kg-dry	10	7/2/2013
Lead	920	0.77		mg/Kg-dry	10	7/2/2013
Selenium	ND	1.5		mg/Kg-dry	10	7/2/2013
Silver	2.7	1.5		mg/Kg-dry	10	7/2/2013
Semivolatile Organic Compounds by GC/MS	**SW8270C (SW3550B)**			Prep Date: **6/28/2013**		Analyst: **DM**
Acenaphthene	17	0.48		mg/Kg-dry	1	7/1/2013
Acenaphthylene	2.2	0.48		mg/Kg-dry	1	7/1/2013
Anthracene	42	0.48		mg/Kg-dry	1	7/1/2013
Benz(a)anthracene	72	4.8		mg/Kg-dry	10	7/3/2013
Benzo(a)pyrene	67	4.8		mg/Kg-dry	10	7/3/2013
Benzo(b)fluoranthene	57	0.48		mg/Kg-dry	1	7/1/2013
Benzo(g,h,i)perylene	32	0.48		mg/Kg-dry	1	7/1/2013
Benzo(k)fluoranthene	52	0.48		mg/Kg-dry	1	7/1/2013
Chrysene	77	4.8		mg/Kg-dry	10	7/3/2013
Dibenz(a,h)anthracene	16	0.48		mg/Kg-dry	1	7/1/2013
Fluoranthene	180	4.8		mg/Kg-dry	10	7/3/2013
Fluorene	20	0.48		mg/Kg-dry	1	7/1/2013
Indeno(1,2,3-cd)pyrene	28	0.48		mg/Kg-dry	1	7/1/2013
Naphthalene	2.9	0.48		mg/Kg-dry	1	7/1/2013
Phenanthrene	160	4.8		mg/Kg-dry	10	7/3/2013
Pyrene	160	4.8		mg/Kg-dry	10	7/3/2013
BTEX by GC/MS	**SW5035/8260B**			Prep Date: **6/28/2013**		Analyst: **PS**
Benzene	ND	0.008		mg/Kg-dry	1	7/2/2013
Ethylbenzene	ND	0.008		mg/Kg-dry	1	7/2/2013
Toluene	ND	0.008		mg/Kg-dry	1	7/2/2013
Xylenes, Total	ND	0.024		mg/Kg-dry	1	7/2/2013
Percent Moisture	**D2974**			Prep Date: **6/27/2013**		Analyst: **SDA**
Percent Moisture	31.8	0.2	*	wt%	1	6/27/2013

Qualifiers:
ND - Not Detected at the Reporting Limit
J - Analyte detected below quantitation limits
B - Analyte detected in the associated Method Blank
HT - Sample received past holding time
* - Non-accredited parameter
RL - Reporting / Quantitation Limit for the analysis
S - Spike Recovery outside accepted recovery limits
R - RPD outside accepted recovery limits
E - Value above quantitation range
H - Holding time exceeded

STAT Analysis Corporation
2242 West Harrison St., Suite 200, Chicago, IL 60612-3766
Tel: (312) 733-0551 Fax: (312) 733-2386 STATinfo@STATAnalysis.com
Accreditation Numbers: IEPA ELAP 100445; ORELAP IL300001; AIHA 101160; NVLAP LabCode 101202

Date Reported: September 30, 2013
Date Printed: September 30, 2013

Client: Terracon Consultants, Inc.
Lab Order: 13060930
Project: A2137008, 650 West 83rd Street, Chicago IL
Lab ID: 13060930-019

Client Sample ID: B27 (1-3)
Collection Date 6/26/2013 9:30:00 AM
Matrix: Soil

Analyses	Result	RL	Qualifier	Units	DF	Date Analyzed
Mercury	**SW7471A**			Prep Date: **7/3/2013**		Analyst: **LB**
Mercury	0.47	0.023		mg/Kg-dry	1	7/3/2013
Metals by ICP/MS	**SW6020 (SW3050B)**			Prep Date: **7/1/2013**		Analyst: **JG**
Arsenic	19	1.2		mg/Kg-dry	10	7/2/2013
Barium	350	1.2		mg/Kg-dry	10	7/2/2013
Cadmium	2.3	0.58		mg/Kg-dry	10	7/2/2013
Chromium	23	1.2		mg/Kg-dry	10	7/2/2013
Lead	790	0.58		mg/Kg-dry	10	7/2/2013
Selenium	1.2	1.2		mg/Kg-dry	10	7/2/2013
Silver	ND	1.2		mg/Kg-dry	10	7/2/2013
Semivolatile Organic Compounds by GC/MS	**SW8270C (SW3550B)**			Prep Date: **6/28/2013**		Analyst: **DM**
Acenaphthene	0.94	0.039		mg/Kg-dry	1	7/1/2013
Acenaphthylene	0.52	0.039		mg/Kg-dry	1	7/1/2013
Anthracene	3.7	0.039		mg/Kg-dry	1	7/1/2013
Benz(a)anthracene	8.7	0.39		mg/Kg-dry	10	7/3/2013
Benzo(a)pyrene	8.1	0.39		mg/Kg-dry	10	7/3/2013
Benzo(b)fluoranthene	8	0.39		mg/Kg-dry	10	7/3/2013
Benzo(g,h,i)perylene	4.1	0.039		mg/Kg-dry	1	7/1/2013
Benzo(k)fluoranthene	6.4	0.39		mg/Kg-dry	10	7/3/2013
Chrysene	8.8	0.39		mg/Kg-dry	10	7/3/2013
Dibenz(a,h)anthracene	2.3	0.039		mg/Kg-dry	1	7/1/2013
Fluoranthene	20	0.39		mg/Kg-dry	10	7/3/2013
Fluorene	1.4	0.039		mg/Kg-dry	1	7/1/2013
Indeno(1,2,3-cd)pyrene	3.9	0.039		mg/Kg-dry	1	7/1/2013
Naphthalene	0.12	0.039		mg/Kg-dry	1	7/1/2013
Phenanthrene	11	0.39		mg/Kg-dry	10	7/3/2013
Pyrene	16	0.39		mg/Kg-dry	10	7/3/2013
BTEX by GC/MS	**SW5035/8260B**			Prep Date: **6/28/2013**		Analyst: **PS**
Benzene	ND	0.0057		mg/Kg-dry	1	7/2/2013
Ethylbenzene	ND	0.0057		mg/Kg-dry	1	7/2/2013
Toluene	ND	0.0057		mg/Kg-dry	1	7/2/2013
Xylenes, Total	ND	0.017		mg/Kg-dry	1	7/2/2013
Percent Moisture	**D2974**			Prep Date: **6/27/2013**		Analyst: **SDA**
Percent Moisture	16.8	0.2	*	wt%	1	6/27/2013

Qualifiers:
ND - Not Detected at the Reporting Limit
J - Analyte detected below quantitation limits
B - Analyte detected in the associated Method Blank
HT - Sample received past holding time
* - Non-accredited parameter
RL - Reporting / Quantitation Limit for the analysis
S - Spike Recovery outside accepted recovery limits
R - RPD outside accepted recovery limits
E - Value above quantitation range
H - Holding time exceeded

STAT Analysis Corporation
2242 West Harrison St., Suite 200, Chicago, IL 60612-3766
Tel: (312) 733-0551 Fax: (312) 733-2386 STATinfo@STATAnalysis.com
Accreditation Numbers: IEPA ELAP 100445; ORELAP IL300001; AIHA 101160; NVLAP LabCode 101202

Date Reported: September 30, 2013
Date Printed: September 30, 2013

Client: Terracon Consultants, Inc.
Lab Order: 13060930
Project: A2137008, 650 West 83rd Street, Chicago IL
Lab ID: 13060930-020

Client Sample ID: B27 (6-8)
Collection Date 6/26/2013 9:40:00 AM
Matrix: Soil

Analyses	Result	RL	Qualifier	Units	DF	Date Analyzed
Mercury	**SW7471A**			Prep Date: **7/3/2013**		Analyst: **LB**
Mercury	0.38	0.024		mg/Kg-dry	1	7/3/2013
Metals by ICP/MS	**SW6020 (SW3050B)**			Prep Date: **7/1/2013**		Analyst: **JG**
Arsenic	13	1.4		mg/Kg-dry	10	7/2/2013
Barium	340	1.4		mg/Kg-dry	10	7/2/2013
Cadmium	4.3	0.69		mg/Kg-dry	10	7/2/2013
Chromium	40	1.4		mg/Kg-dry	10	7/2/2013
Lead	620	0.69		mg/Kg-dry	10	7/2/2013
Selenium	ND	1.4		mg/Kg-dry	10	7/2/2013
Silver	1.4	1.4		mg/Kg-dry	10	7/2/2013
Semivolatile Organic Compounds by GC/MS	**SW8270C (SW3550B)**			Prep Date: **6/28/2013**		Analyst: **DM**
Acenaphthene	0.13	0.046		mg/Kg-dry	1	7/1/2013
Acenaphthylene	0.055	0.046		mg/Kg-dry	1	7/1/2013
Anthracene	0.24	0.046		mg/Kg-dry	1	7/1/2013
Benz(a)anthracene	0.79	0.046		mg/Kg-dry	1	7/1/2013
Benzo(a)pyrene	0.89	0.046		mg/Kg-dry	1	7/1/2013
Benzo(b)fluoranthene	1	0.046		mg/Kg-dry	1	7/1/2013
Benzo(g,h,i)perylene	0.65	0.046		mg/Kg-dry	1	7/1/2013
Benzo(k)fluoranthene	0.67	0.046		mg/Kg-dry	1	7/1/2013
Chrysene	1.1	0.046		mg/Kg-dry	1	7/1/2013
Dibenz(a,h)anthracene	0.31	0.046		mg/Kg-dry	1	7/1/2013
Fluoranthene	1.6	0.046		mg/Kg-dry	1	7/1/2013
Fluorene	0.13	0.046		mg/Kg-dry	1	7/1/2013
Indeno(1,2,3-cd)pyrene	0.49	0.046		mg/Kg-dry	1	7/1/2013
Naphthalene	0.24	0.046		mg/Kg-dry	1	7/1/2013
Phenanthrene	1.3	0.046		mg/Kg-dry	1	7/1/2013
Pyrene	1.7	0.046		mg/Kg-dry	1	7/1/2013
BTEX by GC/MS	**SW5035/8260B**			Prep Date: **6/28/2013**		Analyst: **PS**
Benzene	ND	0.0054		mg/Kg-dry	1	7/2/2013
Ethylbenzene	ND	0.0054		mg/Kg-dry	1	7/2/2013
Toluene	ND	0.0054		mg/Kg-dry	1	7/2/2013
Xylenes, Total	ND	0.016		mg/Kg-dry	1	7/2/2013
Percent Moisture	**D2974**			Prep Date: **6/27/2013**		Analyst: **SDA**
Percent Moisture	28.1	0.2	*	wt%	1	6/27/2013

Qualifiers:
ND - Not Detected at the Reporting Limit
J - Analyte detected below quantitation limits
B - Analyte detected in the associated Method Blank
HT - Sample received past holding time
* - Non-accredited parameter
RL - Reporting / Quantitation Limit for the analysis
S - Spike Recovery outside accepted recovery limits
R - RPD outside accepted recovery limits
E - Value above quantitation range
H - Holding time exceeded

STAT Analysis Corporation
2242 West Harrison St., Suite 200, Chicago, IL 60612-3766
Tel: (312) 733-0551 Fax: (312) 733-2386 STATinfo@STATAnalysis.com
Accreditation Numbers: IEPA ELAP 100445; ORELAP IL300001; AIHA 101160; NVLAP LabCode 101202

Date Reported: September 30, 2013
Date Printed: September 30, 2013

Client: Terracon Consultants, Inc.
Lab Order: 13060930
Project: A2137008, 650 West 83rd Street, Chicago IL
Lab ID: 13060930-021

Client Sample ID: B36 (1-3)
Collection Date 6/26/2013 10:00:00 AM
Matrix: Soil

Analyses	Result	RL	Qualifier	Units	DF	Date Analyzed
Mercury	**SW7471A**			Prep Date: **7/3/2013**		Analyst: **LB**
Mercury	0.098	0.021		mg/Kg-dry	1	7/3/2013
Metals by ICP/MS	**SW6020 (SW3050B)**			Prep Date: **7/1/2013**		Analyst: **JG**
Arsenic	9.5	1.1		mg/Kg-dry	10	7/1/2013
Barium	4000	1.1		mg/Kg-dry	10	7/1/2013
Cadmium	1.9	0.55		mg/Kg-dry	10	7/1/2013
Chromium	19	1.1		mg/Kg-dry	10	7/1/2013
Lead	160	0.55		mg/Kg-dry	10	7/1/2013
Selenium	ND	1.1		mg/Kg-dry	10	7/1/2013
Silver	ND	1.1		mg/Kg-dry	10	7/1/2013
Semivolatile Organic Compounds by GC/MS	**SW8270C (SW3550B)**			Prep Date: **6/28/2013**		Analyst: **DM**
Acenaphthene	0.05	0.037		mg/Kg-dry	1	7/1/2013
Acenaphthylene	0.05	0.037		mg/Kg-dry	1	7/1/2013
Anthracene	0.12	0.037		mg/Kg-dry	1	7/1/2013
Benz(a)anthracene	0.63	0.037		mg/Kg-dry	1	7/1/2013
Benzo(a)pyrene	0.79	0.037		mg/Kg-dry	1	7/1/2013
Benzo(b)fluoranthene	0.79	0.037		mg/Kg-dry	1	7/1/2013
Benzo(g,h,i)perylene	0.51	0.037		mg/Kg-dry	1	7/1/2013
Benzo(k)fluoranthene	0.84	0.037		mg/Kg-dry	1	7/1/2013
Chrysene	0.83	0.037		mg/Kg-dry	1	7/1/2013
Dibenz(a,h)anthracene	0.25	0.037		mg/Kg-dry	1	7/1/2013
Fluoranthene	1.3	0.037		mg/Kg-dry	1	7/1/2013
Fluorene	0.039	0.037		mg/Kg-dry	1	7/1/2013
Indeno(1,2,3-cd)pyrene	0.42	0.037		mg/Kg-dry	1	7/1/2013
Naphthalene	ND	0.037		mg/Kg-dry	1	7/1/2013
Phenanthrene	0.5	0.037		mg/Kg-dry	1	7/1/2013
Pyrene	1.1	0.037		mg/Kg-dry	1	7/1/2013
BTEX by GC/MS	**SW5035/8260B**			Prep Date: **6/28/2013**		Analyst: **PS**
Benzene	ND	0.0045		mg/Kg-dry	1	7/2/2013
Ethylbenzene	ND	0.0045		mg/Kg-dry	1	7/2/2013
Toluene	ND	0.0045		mg/Kg-dry	1	7/2/2013
Xylenes, Total	ND	0.014		mg/Kg-dry	1	7/2/2013
Percent Moisture	**D2974**			Prep Date: **6/27/2013**		Analyst: **SDA**
Percent Moisture	10.2	0.2	*	wt%	1	6/27/2013

Qualifiers:
- ND - Not Detected at the Reporting Limit
- J - Analyte detected below quantitation limits
- B - Analyte detected in the associated Method Blank
- HT - Sample received past holding time
- * - Non-accredited parameter
- RL - Reporting / Quantitation Limit for the analysis
- S - Spike Recovery outside accepted recovery limits
- R - RPD outside accepted recovery limits
- E - Value above quantitation range
- H - Holding time exceeded

STAT Analysis Corporation
2242 West Harrison St., Suite 200, Chicago, IL 60612-3766
Tel: (312) 733-0551 Fax: (312) 733-2386 STATinfo@STATAnalysis.com
Accreditation Numbers: IEPA ELAP 100445; ORELAP IL300001; AIHA 101160; NVLAP LabCode 101202

Date Reported: September 30, 2013
Date Printed: September 30, 2013

Client: Terracon Consultants, Inc.
Lab Order: 13060930
Project: A2137008, 650 West 83rd Street, Chicago IL
Lab ID: 13060930-022

Client Sample ID: B36 (4-6)
Collection Date: 6/26/2013 10:20:00 AM
Matrix: Soil

Analyses	Result	RL	Qualifier	Units	DF	Date Analyzed
Mercury	**SW7471A**			Prep Date: **7/3/2013**		Analyst: **LB**
Mercury	0.027	0.023		mg/Kg-dry	1	7/3/2013
Metals by ICP/MS	**SW6020 (SW3050B)**			Prep Date: **7/1/2013**		Analyst: **JG**
Arsenic	11	1.1		mg/Kg-dry	10	7/1/2013
Barium	74	1.1		mg/Kg-dry	10	7/1/2013
Cadmium	ND	0.55		mg/Kg-dry	10	7/1/2013
Chromium	19	1.1		mg/Kg-dry	10	7/1/2013
Lead	19	0.55		mg/Kg-dry	10	7/1/2013
Selenium	ND	1.1		mg/Kg-dry	10	7/1/2013
Silver	ND	1.1		mg/Kg-dry	10	7/1/2013
Semivolatile Organic Compounds by GC/MS	**SW8270C (SW3550B)**			Prep Date: **6/28/2013**		Analyst: **DM**
Acenaphthene	0.075	0.041		mg/Kg-dry	1	7/1/2013
Acenaphthylene	0.092	0.041		mg/Kg-dry	1	7/1/2013
Anthracene	0.22	0.041		mg/Kg-dry	1	7/1/2013
Benz(a)anthracene	0.6	0.041		mg/Kg-dry	1	7/1/2013
Benzo(a)pyrene	0.55	0.041		mg/Kg-dry	1	7/1/2013
Benzo(b)fluoranthene	0.59	0.041		mg/Kg-dry	1	7/1/2013
Benzo(g,h,i)perylene	0.27	0.041		mg/Kg-dry	1	7/1/2013
Benzo(k)fluoranthene	0.34	0.041		mg/Kg-dry	1	7/1/2013
Chrysene	0.67	0.041		mg/Kg-dry	1	7/1/2013
Dibenz(a,h)anthracene	0.15	0.041		mg/Kg-dry	1	7/1/2013
Fluoranthene	1.4	0.041		mg/Kg-dry	1	7/1/2013
Fluorene	0.14	0.041		mg/Kg-dry	1	7/1/2013
Indeno(1,2,3-cd)pyrene	0.23	0.041		mg/Kg-dry	1	7/1/2013
Naphthalene	0.047	0.041		mg/Kg-dry	1	7/1/2013
Phenanthrene	1.2	0.041		mg/Kg-dry	1	7/1/2013
Pyrene	1.3	0.041		mg/Kg-dry	1	7/1/2013
BTEX by GC/MS	**SW5035/8260B**			Prep Date: **6/28/2013**		Analyst: **ERP**
Benzene	ND	0.0067		mg/Kg-dry	1	7/2/2013
Ethylbenzene	ND	0.0067		mg/Kg-dry	1	7/2/2013
Toluene	ND	0.0067		mg/Kg-dry	1	7/2/2013
Xylenes, Total	ND	0.02		mg/Kg-dry	1	7/2/2013
Percent Moisture	**D2974**			Prep Date: **6/27/2013**		Analyst: **SDA**
Percent Moisture	19.0	0.2	*	wt%	1	6/27/2013

Qualifiers:
ND - Not Detected at the Reporting Limit
J - Analyte detected below quantitation limits
B - Analyte detected in the associated Method Blank
HT - Sample received past holding time
* - Non-accredited parameter
RL - Reporting / Quantitation Limit for the analysis
S - Spike Recovery outside accepted recovery limits
R - RPD outside accepted recovery limits
E - Value above quantitation range
H - Holding time exceeded

STAT Analysis Corporation
2242 West Harrison St., Suite 200, Chicago, IL 60612-3766
Tel: (312) 733-0551 Fax: (312) 733-2386 STATinfo@STATAnalysis.com
Accreditation Numbers: IEPA ELAP 100445; ORELAP IL300001; AIHA 101160; NVLAP LabCode 101202

Date Reported: September 30, 2013
Date Printed: September 30, 2013

Client: Terracon Consultants, Inc.
Lab Order: 13060930
Project: A2137008, 650 West 83rd Street, Chicago IL
Lab ID: 13060930-023

Client Sample ID: B19 (1-3)
Collection Date 6/26/2013 2:00:00 PM
Matrix: Soil

Analyses	Result	RL	Qualifier	Units	DF	Date Analyzed
Mercury	**SW7471A**			Prep Date: **7/3/2013**		Analyst: **LB**
Mercury	0.086	0.02		mg/Kg-dry	1	7/3/2013
Metals by ICP/MS	**SW6020 (SW3050B)**			Prep Date: **7/1/2013**		Analyst: **JG**
Arsenic	7.3	1.1		mg/Kg-dry	10	7/1/2013
Barium	130	1.1		mg/Kg-dry	10	7/1/2013
Cadmium	0.7	0.57		mg/Kg-dry	10	7/1/2013
Chromium	12	1.1		mg/Kg-dry	10	7/1/2013
Lead	150	0.57		mg/Kg-dry	10	7/1/2013
Selenium	ND	1.1		mg/Kg-dry	10	7/1/2013
Silver	ND	1.1		mg/Kg-dry	10	7/1/2013
Semivolatile Organic Compounds by GC/MS	**SW8270C (SW3550B)**			Prep Date: **6/28/2013**		Analyst: **DM**
Acenaphthene	0.22	0.036		mg/Kg-dry	1	7/1/2013
Acenaphthylene	0.16	0.036		mg/Kg-dry	1	7/1/2013
Anthracene	0.63	0.036		mg/Kg-dry	1	7/1/2013
Benz(a)anthracene	1.8	0.036		mg/Kg-dry	1	7/1/2013
Benzo(a)pyrene	1.9	0.036		mg/Kg-dry	1	7/1/2013
Benzo(b)fluoranthene	1.7	0.036		mg/Kg-dry	1	7/1/2013
Benzo(g,h,i)perylene	0.9	0.036		mg/Kg-dry	1	7/1/2013
Benzo(k)fluoranthene	1.5	0.036		mg/Kg-dry	1	7/1/2013
Chrysene	1.9	0.036		mg/Kg-dry	1	7/1/2013
Dibenz(a,h)anthracene	0.5	0.036		mg/Kg-dry	1	7/1/2013
Fluoranthene	3.7	0.036		mg/Kg-dry	1	7/1/2013
Fluorene	0.15	0.036		mg/Kg-dry	1	7/1/2013
Indeno(1,2,3-cd)pyrene	0.83	0.036		mg/Kg-dry	1	7/1/2013
Naphthalene	0.09	0.036		mg/Kg-dry	1	7/1/2013
Phenanthrene	1.6	0.036		mg/Kg-dry	1	7/1/2013
Pyrene	3.3	0.036		mg/Kg-dry	1	7/1/2013
BTEX by GC/MS	**SW5035/8260B**			Prep Date: **6/28/2013**		Analyst: **PS**
Benzene	ND	0.005		mg/Kg-dry	1	7/2/2013
Ethylbenzene	ND	0.005		mg/Kg-dry	1	7/2/2013
Toluene	ND	0.005		mg/Kg-dry	1	7/2/2013
Xylenes, Total	ND	0.015		mg/Kg-dry	1	7/2/2013
Percent Moisture	**D2974**			Prep Date: **6/27/2013**		Analyst: **SDA**
Percent Moisture	9.8	0.2	*	wt%	1	6/27/2013

Qualifiers:
ND - Not Detected at the Reporting Limit
J - Analyte detected below quantitation limits
B - Analyte detected in the associated Method Blank
HT - Sample received past holding time
* - Non-accredited parameter
RL - Reporting / Quantitation Limit for the analysis
S - Spike Recovery outside accepted recovery limits
R - RPD outside accepted recovery limits
E - Value above quantitation range
H - Holding time exceeded

STAT Analysis Corporation
2242 West Harrison St., Suite 200, Chicago, IL 60612-3766
Tel: (312) 733-0551 Fax: (312) 733-2386 STATinfo@STATAnalysis.com
Accreditation Numbers: IEPA ELAP 100445; ORELAP IL300001; AIHA 101160; NVLAP LabCode 101202

Date Reported: September 30, 2013
Date Printed: September 30, 2013

Client: Terracon Consultants, Inc.
Lab Order: 13060930
Project: A2137008, 650 West 83rd Street, Chicago IL
Lab ID: 13060930-024

Client Sample ID: B19 (4-6)
Collection Date 6/26/2013 2:20:00 PM
Matrix: Soil

Analyses	Result	RL	Qualifier	Units	DF	Date Analyzed
Mercury	**SW7471A**			Prep Date: **7/3/2013**		Analyst: **LB**
Mercury	ND	0.025		mg/Kg-dry	1	7/3/2013
Metals by ICP/MS	**SW6020 (SW3050B)**			Prep Date: **7/1/2013**		Analyst: **JG**
Arsenic	1.9	1.4		mg/Kg-dry	10	7/1/2013
Barium	42	1.4		mg/Kg-dry	10	7/1/2013
Cadmium	ND	0.7		mg/Kg-dry	10	7/1/2013
Chromium	9.6	1.4		mg/Kg-dry	10	7/1/2013
Lead	11	0.7		mg/Kg-dry	10	7/1/2013
Selenium	ND	1.4		mg/Kg-dry	10	7/1/2013
Silver	ND	1.4		mg/Kg-dry	10	7/1/2013
Semivolatile Organic Compounds by GC/MS	**SW8270C (SW3550B)**			Prep Date: **6/28/2013**		Analyst: **DM**
Acenaphthene	ND	0.047		mg/Kg-dry	1	7/1/2013
Acenaphthylene	ND	0.047		mg/Kg-dry	1	7/1/2013
Anthracene	ND	0.047		mg/Kg-dry	1	7/1/2013
Benz(a)anthracene	0.049	0.047		mg/Kg-dry	1	7/1/2013
Benzo(a)pyrene	0.054	0.047		mg/Kg-dry	1	7/1/2013
Benzo(b)fluoranthene	ND	0.047		mg/Kg-dry	1	7/1/2013
Benzo(g,h,i)perylene	ND	0.047		mg/Kg-dry	1	7/1/2013
Benzo(k)fluoranthene	ND	0.047		mg/Kg-dry	1	7/1/2013
Chrysene	0.064	0.047		mg/Kg-dry	1	7/1/2013
Dibenz(a,h)anthracene	ND	0.047		mg/Kg-dry	1	7/1/2013
Fluoranthene	0.11	0.047		mg/Kg-dry	1	7/1/2013
Fluorene	ND	0.047		mg/Kg-dry	1	7/1/2013
Indeno(1,2,3-cd)pyrene	ND	0.047		mg/Kg-dry	1	7/1/2013
Naphthalene	ND	0.047		mg/Kg-dry	1	7/1/2013
Phenanthrene	0.094	0.047		mg/Kg-dry	1	7/1/2013
Pyrene	0.11	0.047		mg/Kg-dry	1	7/1/2013
BTEX by GC/MS	**SW5035/8260B**			Prep Date: **6/28/2013**		Analyst: **PS**
Benzene	ND	0.0058		mg/Kg-dry	1	7/2/2013
Ethylbenzene	ND	0.0058		mg/Kg-dry	1	7/2/2013
Toluene	ND	0.0058		mg/Kg-dry	1	7/2/2013
Xylenes, Total	ND	0.017		mg/Kg-dry	1	7/2/2013
Percent Moisture	**D2974**			Prep Date: **6/27/2013**		Analyst: **SDA**
Percent Moisture	30.7	0.2	*	wt%	1	6/27/2013

Qualifiers:
ND - Not Detected at the Reporting Limit
J - Analyte detected below quantitation limits
B - Analyte detected in the associated Method Blank
HT - Sample received past holding time
* - Non-accredited parameter
RL - Reporting / Quantitation Limit for the analysis
S - Spike Recovery outside accepted recovery limits
R - RPD outside accepted recovery limits
E - Value above quantitation range
H - Holding time exceeded

STAT Analysis Corporation
2242 W. Harrison, Suite 200, Chicago, Illinois 60612 Phone: (312) 733-0551 Fax: (312) 733-2386
e-mail address: STATinfo@STATAnalysis.com AIHA, NVLAP and NELAP accredited

CHAIN OF CUSTODY RECORD

Nº: 850442 Page : 1 of 2

Company: Terracon
Project Number: A2137008 Client Tracking No.:
Project Name: 650 west 83rd Street
Project Location: Chicago IL
Sampler(s): J. Julian
Report To: Richard O'Brien Phone: 312-575-0014 Fax: 312-443-2958
QC Level: 1 2 3 4 e-mail: rmobrien@terracon.com

P.O. No.:
Quote No.:

Turn Around: Standard
Results Needed: / / am/pm

Client Sample Number/Description:	Date Taken	Time Taken	Matrix	Comp.	Grab	Preserv.	No. of Containers	VOC	SVOC	Pesticides	PCB	TAL (Inorganics)	Herbicides	Benzex	PNA	RCRA Metals	Remarks	Lab No.
B8 (1-3)	6-26-13	1600	S		X		4							X	X	X		001
B8 (4-6)		1620	S		X		4	X	X	X	X	X	X					002
B9 (1-3)		1530	S		X		4							X	X	X		003
B9 (4-6)		1545	S		X		4							X	X	X		004
B17 (1-3)		1510	S		X		4							X	X	X		005
B17 (4-6)		1520	S		X		4							X	X	X		006
B26 (1-3)		1430	S		X		4							X	X	X		007
B26 (6-8)		1455	S		X		4							X	X	X		008
B15 (1-3)		1320	S		X		4							X	X	X		009
B15 (4-6)		1335	S		X		4							X	X	X		010
B25 (1-3)		1240	S		X		4							X	X	X		011
B25 (4-6)		1300	S		X		4							X	X	X		012
B33 (1-3)		1200	S		X		4							X	X	X		013
B33 (4-6)		1230	S		X		4							X	X	X		014
B32 (1-3)		1130	S		X		4							X	X	X		015
B32 (6-8)		1150	S		X		4							X	X	X		016
B35 (1-3)		1030	S		X		4							X	X	X		017
B35 (4-5)		1040	S		X		4							X	X	X		018
B27 (1-3)		930	S		X		4							X	X	X		019
B27 (6-8)		940	S		X		4							X	X	X		020

Relinquished by: (Signature)	Date/Time: 6/26/13	1700
Received by: (Signature)	Date/Time: 6/26/13	1700
Relinquished by: (Signature)	Date/Time:	
Received by: (Signature)	Date/Time:	
Relinquished by: (Signature)	Date/Time:	
Received by: (Signature)	Date/Time:	

Comments: e-mail copy of COC to Richard O'Brien

Preservation Code: A = None B = HNO_3 C = NaOH D = H_2SO_4 E = HCl F = 5035/EnCore G = Other

Laboratory Work Order No.: 1306930

Received on Ice: Yes X No

Temperature: 7.2 °C

STAT Analysis Corporation
2242 W. Harrison, Suite 200, Chicago, Illinois 60612 Phone: (312) 733-0551 Fax: (312) 733-2386
e-mail address: STATinfo@STATAnalysis.com AIHA, NVLAP and NELAP accredited

CHAIN OF CUSTODY RECORD

Nº: 850440 Page: 2 of 2

Company: TERRACON
Project Number: A2137008 Client Tracking No.:
Project Name: 650 West 83
Project Location: Chicago IL
Sampler(s): J. Sullivan
Report To: Richard O'Brien Phone: 312-575-0014
Fax: 312-443-2958
QC Level: 1 2 3 4 e-mail: cmobrien@terracon.com

P.O. No.:
Quote No.:

Turn Around: STANDARD
Results Needed: / / am/pm

Client Sample Number/Description:	Date Taken	Time Taken	Matrix	Comp.	Grab	Preserv.	No. of Containers	12 Met RCRA metals	Remarks	Lab No:
B36 (1-3)	6-26-13	1000	S		X		4	X		021
B36 (4-6)	↓	1020	S		X		4	X		022
B19 (1-3)		1400	S		X		4	X		023
B19 (4-6)	↓	1420	S		X		4	X		024

Relinquished by: (Signature) Date/Time: 6/26/13 1700
Received by: (Signature) Date/Time: 6/26/13 1700
Relinquished by: (Signature) Date/Time:
Received by: (Signature) Date/Time:
Relinquished by: (Signature) Date/Time:
Received by: (Signature) Date/Time:

Comments: email copy of COC to Richard O'Brien

Preservation Code: A = None B = HNO_3 C = NaOH D = H_2SO_4 E = HCl F = 5035/EnCore G = Other

Laboratory Work Order No.: 1306093

Received on Ice: Yes X No

Temperature: 7.2 °C

STAT Analysis Corporation

Sample Receipt Checklist

Client Name TERRACON | Date and Time Received: 6/26/2013 5:00:00 PM

Work Order Number 13060930 | Received by: TJW

Checklist completed by: [signature] 6/26/13 (Signature / Date) | Reviewed by: [initials] 6/28/13 (Initials / Date)

Matrix: | Carrier name | Client Delivered

Shipping container/cooler in good condition?	Yes ☑	No ☐	Not Present ☐
Custody seals intact on shippping container/cooler?	Yes ☐	No ☐	Not Present ☑
Custody seals intact on sample bottles?	Yes ☐	No ☐	Not Present ☑
Chain of custody present?	Yes ☑	No ☐	
Chain of custody signed when relinquished and received?	Yes ☑	No ☐	
Chain of custody agrees with sample labels/containers?	Yes ☑	No ☐	
Samples in proper container/bottle?	Yes ☑	No ☐	
Sample containers intact?	Yes ☑	No ☐	
Sufficient sample volume for indicated test?	Yes ☑	No ☐	
All samples received within holding time?	Yes ☑	No ☐	
Container or Temp Blank temperature in compliance?	Yes ☑	No ☐	Temperature 7.2 °C
Water - VOA vials have zero headspace?	No VOA vials submitted ☐	Yes ☐	No ☐
Water - Samples pH checked?	Yes ☐	No ☐	Checked by:
Water - Samples properly preserved?	Yes ☐	No ☐	pH Adjusted?

Any No response must be detailed in the comments section below.

Comments:

Client / Person contacted: Date contacted: Contacted by:

Response:

Craig Chawla

From: O'Brien, Richard M [rmobrien@terracon.com]
Sent: Monday, July 01, 2013 9:19 AM
To: Craig Chawla
Subject: 650 W. 83rd Street

Hi Craig,

I have a few changes regarding the samples submitted last Tuesday (6/25) – Friday (6/28) for 650 W. 83rd Street by Jason Juliano for us. Please run the following on standard turnaround:

B18(1-3) – Change from BTEX to VOCs
B33(4-6) – Change from BTEX to VOCs
B15(subsurface) – Change from BTEX to VOCs, add pH

B16(1-3) – Change to IEPA Target Compound List
B16(subsurface) – Change to IEPA Target Compound List

B-8(1-3) – Add pH
B29(1-3) – Add pH
B29(subsurface) – Add pH
B12(1-3) – Add pH
B12(subsurface) – Add pH
B31(1-3) – Add pH
B31(subsurface) – Add pH

Note I do not have the "subsurface" intervals listed in samples listed at the moment. They are most likely (4-6) or (6-8). Let me know if you have any questions.

Thanks,

Richard O'Brien, P.E.
Senior Project Engineer
Environmental Services

Terracon Consultants, Inc.
650 West Lake Street, Suite 420 I Chicago, IL 60661
P [312] 575-0014 I F [312] 575-0111 I C [312] 443-2958
rmobrien@terracon.com I terracon.com

Terracon provides geotechnical, environmental, construction materials, and facilities consulting engineering services delivered with responsiveness, resourcefulness, and reliability.

Private and confidential as detailed here (www.terracon.com/disclaimer). If you cannot access hyperlink, please e-mail sender.

Frank Capoccia

From: O'Brien, Richard M [rmobrien@terracon.com]
Sent: Monday, September 23, 2013 4:22 PM
To: Frank Capoccia
Cc: Toth, Matthew J
Subject: RE: TOR 00005 - Additional TCLP Lab Analyssis Request

Hi Frank,

For the 650 W 83rd Job with samples submitted last week of June 2013, we would like to do TCLP lead analysis on the following samples on standard turnaround:

B3(4-6)

B11(4-6)

B13(4-6)

B17(1-3)

Thanks,

Richard O'Brien, P.E.
Senior Project Engineer
Environmental Services

Terracon Consultants, Inc.
650 West Lake Street, Suite 420 I Chicago, IL 60661
P [312] 575-0014 I F [312] 575-0111 I C [312] 443-2958
rmobrien@terracon.com I terracon.com

Terracon provides environmental, facilities, geotechnical, and materials consulting engineering services delivered with responsiveness, resourcefulness, and reliability.

Private and confidential as detailed here (www.terracon.com/disclaimer). If you cannot access hyperlink, please e-mail sender.

STAT Analysis Corporation
2242 West Harrison St., Suite 200, Chicago, IL 60612-3766
Tel: (312) 733-0551 Fax: (312) 733-2386 STATinfo@STATAnalysis.com
Accreditation Numbers: IEPA ELAP 100445; ORELAP IL300001;AIHA 101160; NVLAP LabCode 101202-

July 24, 2013

Terracon Consultants, Inc.
650 W. Lake Street
Suite 420
Chicago, IL 60661
Telephone: (312) 575-0014
Fax: (312) 575-0111

RE: A2137008, 650 West 83rd STAT Project No: 13060872

Dear Richard O'Brien:

STAT Analysis received 8 samples for the referenced project on 6/25/2013 3:15:00 PM. The analytical results are presented in the following report.

This report is revised to reflect additional analysis requested after the initial report was issued.

All analyses were performed in accordance with the requirements of 35 IAC Part 186 / NELAC standards. Analyses were performed in accordance with methods as referenced on the analytical report. Those analytical results expressed on a dry weight basis are also noted on the analytical report.

All analyses were performed within established holding time criteria, and all Quality Control criteria met EPA or laboratory specifications except when noted in the Case Narrative or Analytical Report. If required, an estimate of uncertainty for the analyses can be provided. A listing of accredited methods/parameters can also be provided.

Thank you for the opportunity to serve you and I look forward to working with you in the future. If you have any questions regarding the enclosed materials, please contact me at (312) 733-0551.

Sincerely,

Catia Giannini
Project Manager

The information contained in this report and any attachments is confidential information intended only for the use of the individual or entities named above. The results of this report relate only to the samples tested. If you have received this report in error, please notify us immediately by phone. This report shall not be reproduced, except in its entirety, unless written approval has been obtained from the laboratory. This analytical report shall become property of the Customer upon payment in full. Otherwise, STAT will be under no obligation to support, defend or discuss the analytical report.

STAT Analysis Corporation

Date: July 24, 2013

Client: Terracon Consultants, Inc.
Project: A2137008, 650 West 83rd
Lab Order: 13060872

Work Order Sample Summary

Lab Sample ID	Client Sample ID	Tag Number	Collection Date	Date Received
13060872-001A	B-34 (1-3)		6/25/2013 8:50:00 AM	6/25/2013
13060872-001B	B-34 (1-3)		6/25/2013 8:50:00 AM	6/25/2013
13060872-002A	B-34 (4-6)		6/25/2013 9:00:00 AM	6/25/2013
13060872-002B	B-34 (4-6)		6/25/2013 9:00:00 AM	6/25/2013
13060872-003A	B-10 (1-3)		6/25/2013 9:30:00 AM	6/25/2013
13060872-003B	B-10 (1-3)		6/25/2013 9:30:00 AM	6/25/2013
13060872-004A	B-10 (4-6)		6/25/2013 10:00:00 AM	6/25/2013
13060872-004B	B-10 (4-6)		6/25/2013 10:00:00 AM	6/25/2013
13060872-005A	B-6 (1-3)		6/25/2013 11:30:00 AM	6/25/2013
13060872-005B	B-6 (1-3)		6/25/2013 11:30:00 AM	6/25/2013
13060872-006A	B-6 (6-8)		6/25/2013 11:45:00 AM	6/25/2013
13060872-006B	B-6 (6-8)		6/25/2013 11:45:00 AM	6/25/2013
13060872-007A	B-5 (1-3)		6/25/2013 10:20:00 AM	6/25/2013
13060872-007B	B-5 (1-3)		6/25/2013 10:20:00 AM	6/25/2013
13060872-008A	B-5 (4-6)		6/25/2013 10:30:00 AM	6/25/2013
13060872-008B	B-5 (4-6)		6/25/2013 10:30:00 AM	6/25/2013

STAT Analysis Corporation

Date: *July 24, 2013*

CLIENT:	Terracon Consultants, Inc.
Project:	A2137008, 650 West 83rd
Lab Order:	13060872

CASE NARRATIVE

The metals Matrix Spike/Matrix Spike Duplicate (MS/MSD) prepared from sample B-10 (1-3) (13060872-003) had Barium recovery outside control limits (157% (MSD) recovery, QC limits 75-125%; 27% RPD, QC limit <20%). Recovery in the MS was within control limits.

STAT Analysis Corporation
2242 West Harrison St., Suite 200, Chicago, IL 60612-3766
Tel: (312) 733-0551 Fax: (312) 733-2386 STATinfo@STATAnalysis.com
Accreditation Numbers: IEPA ELAP 100445; ORELAP IL300001; AIHA 101160; NVLAP LabCode 101202-

Date Reported: July 24, 2013
Date Printed: July 24, 2013

Client: Terracon Consultants, Inc.
Lab Order: 13060872
Project: A2137008, 650 West 83rd
Lab ID: 13060872-001

Client Sample ID: B-34 (1-3)
Collection Date: 6/25/2013 8:50:00 AM
Matrix: Soil

Analyses	Result	RL	Qualifier	Units	DF	Date Analyzed
PCBs	**SW8082 (SW3550B)**			Prep Date: **6/26/2013**		Analyst: **GVC**
Aroclor 1016	ND	0.096		mg/Kg-dry	1	6/26/2013
Aroclor 1221	ND	0.096		mg/Kg-dry	1	6/26/2013
Aroclor 1232	ND	0.096		mg/Kg-dry	1	6/26/2013
Aroclor 1242	ND	0.096		mg/Kg-dry	1	6/26/2013
Aroclor 1248	ND	0.096		mg/Kg-dry	1	6/26/2013
Aroclor 1254	ND	0.096		mg/Kg-dry	1	6/26/2013
Aroclor 1260	ND	0.096		mg/Kg-dry	1	6/26/2013
Pesticides	**SW8081 (SW3550B)**			Prep Date: **6/26/2013**		Analyst: **GVC**
4,4'-DDD	ND	0.0019		mg/Kg-dry	1	6/26/2013
4,4'-DDE	ND	0.0019		mg/Kg-dry	1	6/26/2013
4,4'-DDT	ND	0.0019		mg/Kg-dry	1	6/26/2013
Aldrin	ND	0.0019		mg/Kg-dry	1	6/26/2013
alpha-BHC	ND	0.0019		mg/Kg-dry	1	6/26/2013
alpha-Chlordane	ND	0.0019		mg/Kg-dry	1	6/26/2013
beta-BHC	ND	0.0019		mg/Kg-dry	1	6/26/2013
Chlordane	ND	0.019		mg/Kg-dry	1	6/26/2013
delta-BHC	ND	0.0019		mg/Kg-dry	1	6/26/2013
Dieldrin	ND	0.0019		mg/Kg-dry	1	6/26/2013
Endosulfan I	ND	0.0019		mg/Kg-dry	1	6/26/2013
Endosulfan II	ND	0.0019		mg/Kg-dry	1	6/26/2013
Endosulfan sulfate	ND	0.0019		mg/Kg-dry	1	6/26/2013
Endrin	ND	0.0019		mg/Kg-dry	1	6/26/2013
Endrin aldehyde	ND	0.0019		mg/Kg-dry	1	6/26/2013
Endrin ketone	ND	0.0019		mg/Kg-dry	1	6/26/2013
gamma-BHC	ND	0.0019		mg/Kg-dry	1	6/26/2013
gamma-Chlordane	ND	0.0019		mg/Kg-dry	1	6/26/2013
Heptachlor	ND	0.0019		mg/Kg-dry	1	6/26/2013
Heptachlor epoxide	ND	0.0019		mg/Kg-dry	1	6/26/2013
Methoxychlor	ND	0.0019		mg/Kg-dry	1	6/26/2013
Toxaphene	ND	0.04		mg/Kg-dry	1	6/26/2013
Herbicides in Soil	**SW8321A (SW3550B)**			Prep Date: **6/26/2013**		Analyst: **MEP**
2,4,5-T	ND	0.004		mg/Kg-dry	1	6/27/2013
2,4,5-TP (Silvex)	ND	0.004		mg/Kg-dry	1	6/27/2013
2,4-D	ND	0.004		mg/Kg-dry	1	6/27/2013
2,4-DB	ND	0.008		mg/Kg-dry	1	6/27/2013
3,5-Dichlorobenzoic Acid	ND	0.004	*	mg/Kg-dry	1	6/27/2013
4-Nitrophenol	ND	0.04	*	mg/Kg-dry	1	6/27/2013

Qualifiers:
ND - Not Detected at the Reporting Limit
J - Analyte detected below quantitation limits
B - Analyte detected in the associated Method Blank
HT - Sample received past holding time
* - Non-accredited parameter
RL - Reporting / Quantitation Limit for the analysis
S - Spike Recovery outside accepted recovery limits
R - RPD outside accepted recovery limits
E - Value above quantitation range
H - Holding time exceeded

STAT Analysis Corporation
2242 West Harrison St., Suite 200, Chicago, IL 60612-3766
Tel: (312) 733-0551 Fax: (312) 733-2386 STATinfo@STATAnalysis.com
Accreditation Numbers: IEPA ELAP 100445; ORELAP IL300001; AIHA 101160; NVLAP LabCode 101202-

Date Reported: July 24, 2013
Date Printed: July 24, 2013

Client: Terracon Consultants, Inc.
Lab Order: 13060872
Project: A2137008, 650 West 83rd
Lab ID: 13060872-001

Client Sample ID: B-34 (1-3)
Collection Date: 6/25/2013 8:50:00 AM
Matrix: Soil

Analyses	Result	RL	Qualifier	Units	DF	Date Analyzed
Herbicides in Soil	**SW8321A (SW3550B)**			Prep Date: **6/26/2013**		Analyst: **MEP**
Acifluorfen	ND	0.004	*	mg/Kg-dry	1	6/27/2013
Chloramben	ND	0.004	*	mg/Kg-dry	1	6/27/2013
Dalapon	ND	0.04		mg/Kg-dry	1	6/27/2013
Dicamba	ND	0.008		mg/Kg-dry	1	6/27/2013
Dichlorprop	ND	0.008		mg/Kg-dry	1	6/27/2013
Dinoseb	ND	0.008		mg/Kg-dry	1	6/27/2013
MCPA	ND	0.008		mg/Kg-dry	1	6/27/2013
MCPP	ND	0.004		mg/Kg-dry	1	6/27/2013
Pentachlorophenol	ND	0.012	*	mg/Kg-dry	1	6/27/2013
Picloram	ND	0.008	*	mg/Kg-dry	1	6/27/2013
Mercury	**SW7471A**			Prep Date: **6/28/2013**		Analyst: **LB**
Mercury	0.42	0.02		mg/Kg-dry	1	6/28/2013
Metals by ICP/MS	**SW6020 (SW3050B)**			Prep Date: **6/26/2013**		Analyst: **JG**
Aluminum	8600	230		mg/Kg-dry	100	6/26/2013
Antimony	ND	2.3		mg/Kg-dry	10	6/26/2013
Arsenic	6.3	1.2		mg/Kg-dry	10	6/26/2013
Barium	170	1.2		mg/Kg-dry	10	6/26/2013
Beryllium	1.9	0.57		mg/Kg-dry	10	6/26/2013
Cadmium	0.68	0.57		mg/Kg-dry	10	6/26/2013
Calcium	33000	690		mg/Kg-dry	100	6/26/2013
Chromium	14	1.2		mg/Kg-dry	10	6/26/2013
Cobalt	6.7	1.2		mg/Kg-dry	10	6/26/2013
Copper	32	2.9		mg/Kg-dry	10	6/26/2013
Iron	19000	340		mg/Kg-dry	100	6/26/2013
Lead	100	0.57		mg/Kg-dry	10	6/26/2013
Magnesium	15000	340		mg/Kg-dry	100	6/26/2013
Manganese	290	1.2		mg/Kg-dry	10	6/26/2013
Nickel	32	1.2		mg/Kg-dry	10	6/26/2013
Potassium	990	34		mg/Kg-dry	10	6/26/2013
Selenium	ND	1.2		mg/Kg-dry	10	6/26/2013
Silver	ND	1.2		mg/Kg-dry	10	6/26/2013
Sodium	1100	69		mg/Kg-dry	10	6/26/2013
Thallium	ND	1.2		mg/Kg-dry	10	6/26/2013
Vanadium	30	1.2		mg/Kg-dry	10	6/26/2013
Zinc	140	5.7		mg/Kg-dry	10	6/26/2013
Semivolatile Organic Compounds by GC/MS	**SW8270C (SW3550B)**			Prep Date: **6/26/2013**		Analyst: **DM**
Acenaphthene	0.37	0.04		mg/Kg-dry	1	6/28/2013

Qualifiers:
ND - Not Detected at the Reporting Limit
J - Analyte detected below quantitation limits
B - Analyte detected in the associated Method Blank
HT - Sample received past holding time
* - Non-accredited parameter
RL - Reporting / Quantitation Limit for the analysis
S - Spike Recovery outside accepted recovery limits
R - RPD outside accepted recovery limits
E - Value above quantitation range
H - Holding time exceeded

STAT Analysis Corporation
2242 West Harrison St., Suite 200, Chicago, IL 60612-3766
Tel: (312) 733-0551 Fax: (312) 733-2386 STATinfo@STATAnalysis.com
Accreditation Numbers: IEPA ELAP 100445; ORELAP IL300001; AIHA 101160; NVLAP LabCode 101202-

Date Reported: July 24, 2013
Date Printed: July 24, 2013

Client: Terracon Consultants, Inc.
Lab Order: 13060872
Project: A2137008, 650 West 83rd
Lab ID: 13060872-001

Client Sample ID: B-34 (1-3)
Collection Date: 6/25/2013 8:50:00 AM
Matrix: Soil

Analyses	Result	RL	Qualifier	Units	DF	Date Analyzed
Semivolatile Organic Compounds by GC/MS	**SW8270C (SW3550B)**			Prep Date: **6/26/2013**		Analyst: **DM**
Acenaphthylene	0.16	0.04		mg/Kg-dry	1	6/28/2013
Aniline	ND	0.4		mg/Kg-dry	1	6/28/2013
Anthracene	1.2	0.04		mg/Kg-dry	1	6/28/2013
Benz(a)anthracene	2.7	0.04		mg/Kg-dry	1	6/28/2013
Benzidine	ND	0.4		mg/Kg-dry	1	6/28/2013
Benzo(a)pyrene	2.5	0.04		mg/Kg-dry	1	6/28/2013
Benzo(b)fluoranthene	2.1	0.04		mg/Kg-dry	1	6/28/2013
Benzo(g,h,i)perylene	1.2	0.04		mg/Kg-dry	1	6/28/2013
Benzo(k)fluoranthene	2.2	0.04		mg/Kg-dry	1	6/28/2013
Benzoic acid	ND	1		mg/Kg-dry	1	6/28/2013
Benzyl alcohol	ND	0.2		mg/Kg-dry	1	6/28/2013
Bis(2-chloroethoxy)methane	ND	0.2		mg/Kg-dry	1	6/28/2013
Bis(2-chloroethyl)ether	ND	0.2		mg/Kg-dry	1	6/28/2013
Bis(2-ethylhexyl)phthalate	ND	1		mg/Kg-dry	1	6/28/2013
4-Bromophenyl phenyl ether	ND	0.2		mg/Kg-dry	1	6/28/2013
Butyl benzyl phthalate	ND	0.2		mg/Kg-dry	1	6/28/2013
Carbazole	0.31	0.2		mg/Kg-dry	1	6/28/2013
4-Chloroaniline	ND	0.2		mg/Kg-dry	1	6/28/2013
4-Chloro-3-methylphenol	ND	0.4		mg/Kg-dry	1	6/28/2013
2-Chloronaphthalene	ND	0.2		mg/Kg-dry	1	6/28/2013
2-Chlorophenol	ND	0.2		mg/Kg-dry	1	6/28/2013
4-Chlorophenyl phenyl ether	ND	0.2		mg/Kg-dry	1	6/28/2013
Chrysene	2.9	0.04		mg/Kg-dry	1	6/28/2013
Dibenz(a,h)anthracene	0.66	0.04		mg/Kg-dry	1	6/28/2013
Dibenzofuran	ND	0.2		mg/Kg-dry	1	6/28/2013
1,2-Dichlorobenzene	ND	0.2		mg/Kg-dry	1	6/28/2013
1,3-Dichlorobenzene	ND	0.2		mg/Kg-dry	1	6/28/2013
1,4-Dichlorobenzene	ND	0.2		mg/Kg-dry	1	6/28/2013
3,3'-Dichlorobenzidine	ND	0.2		mg/Kg-dry	1	6/28/2013
2,4-Dichlorophenol	ND	0.2		mg/Kg-dry	1	6/28/2013
Diethyl phthalate	ND	0.2		mg/Kg-dry	1	6/28/2013
2,4-Dimethylphenol	ND	0.2		mg/Kg-dry	1	6/28/2013
Dimethyl phthalate	ND	0.2		mg/Kg-dry	1	6/28/2013
4,6-Dinitro-2-methylphenol	ND	0.4		mg/Kg-dry	1	6/28/2013
2,4-Dinitrophenol	ND	1		mg/Kg-dry	1	6/28/2013
2,4-Dinitrotoluene	ND	0.04		mg/Kg-dry	1	6/28/2013
2,6-Dinitrotoluene	ND	0.04		mg/Kg-dry	1	6/28/2013
Di-n-butyl phthalate	ND	0.2		mg/Kg-dry	1	6/28/2013

Qualifiers:
ND - Not Detected at the Reporting Limit
J - Analyte detected below quantitation limits
B - Analyte detected in the associated Method Blank
HT - Sample received past holding time
* - Non-accredited parameter
RL - Reporting / Quantitation Limit for the analysis
S - Spike Recovery outside accepted recovery limits
R - RPD outside accepted recovery limits
E - Value above quantitation range
H - Holding time exceeded

STAT Analysis Corporation
2242 West Harrison St., Suite 200, Chicago, IL 60612-3766
Tel: (312) 733-0551 Fax: (312) 733-2386 STATinfo@STATAnalysis.com
Accreditation Numbers: IEPA ELAP 100445; ORELAP IL300001; AIHA 101160; NVLAP LabCode 101202-

Date Reported: July 24, 2013
Date Printed: July 24, 2013

Client: Terracon Consultants, Inc.
Lab Order: 13060872
Project: A2137008, 650 West 83rd
Lab ID: 13060872-001

Client Sample ID: B-34 (1-3)
Collection Date: 6/25/2013 8:50:00 AM
Matrix: Soil

Analyses	Result	RL	Qualifier	Units	DF	Date Analyzed
Semivolatile Organic Compounds by GC/MS	**SW8270C (SW3550B)**			Prep Date: **6/26/2013**		Analyst: **DM**
Di-n-octyl phthalate	ND	0.2		mg/Kg-dry	1	6/28/2013
Fluoranthene	7.5	0.2		mg/Kg-dry	5	7/1/2013
Fluorene	0.42	0.04		mg/Kg-dry	1	6/28/2013
Hexachlorobenzene	ND	0.2		mg/Kg-dry	1	6/28/2013
Hexachlorobutadiene	ND	0.2		mg/Kg-dry	1	6/28/2013
Hexachlorocyclopentadiene	ND	0.2		mg/Kg-dry	1	6/28/2013
Hexachloroethane	ND	0.2		mg/Kg-dry	1	6/28/2013
Indeno(1,2,3-cd)pyrene	1.1	0.04		mg/Kg-dry	1	6/28/2013
Isophorone	ND	0.2		mg/Kg-dry	1	6/28/2013
2-Methylnaphthalene	ND	0.2		mg/Kg-dry	1	6/28/2013
2-Methylphenol	ND	0.2		mg/Kg-dry	1	6/28/2013
4-Methylphenol	ND	0.2		mg/Kg-dry	1	6/28/2013
Naphthalene	0.28	0.04		mg/Kg-dry	1	6/28/2013
2-Nitroaniline	ND	0.2		mg/Kg-dry	1	6/28/2013
3-Nitroaniline	ND	0.2		mg/Kg-dry	1	6/28/2013
4-Nitroaniline	ND	0.2		mg/Kg-dry	1	6/28/2013
2-Nitrophenol	ND	0.2		mg/Kg-dry	1	6/28/2013
4-Nitrophenol	ND	0.4		mg/Kg-dry	1	6/28/2013
Nitrobenzene	ND	0.04		mg/Kg-dry	1	6/28/2013
N-Nitrosodi-n-propylamine	ND	0.04		mg/Kg-dry	1	6/28/2013
N-Nitrosodimethylamine	ND	0.2		mg/Kg-dry	1	6/28/2013
N-Nitrosodiphenylamine	ND	0.04		mg/Kg-dry	1	6/28/2013
2, 2'-oxybis(1-Chloropropane)	ND	0.2		mg/Kg-dry	1	6/28/2013
Pentachlorophenol	ND	0.08		mg/Kg-dry	1	6/28/2013
Phenanthrene	4.5	0.04		mg/Kg-dry	1	6/28/2013
Phenol	ND	0.2		mg/Kg-dry	1	6/28/2013
Pyrene	6.5	0.2		mg/Kg-dry	5	7/1/2013
Pyridine	ND	0.8		mg/Kg-dry	1	6/28/2013
1,2,4-Trichlorobenzene	ND	0.2		mg/Kg-dry	1	6/28/2013
2,4,5-Trichlorophenol	ND	0.2		mg/Kg-dry	1	6/28/2013
2,4,6-Trichlorophenol	ND	0.2		mg/Kg-dry	1	6/28/2013
Volatile Organic Compounds by GC/MS	**SW5035/8260B**			Prep Date: **6/26/2013**		Analyst: **PS**
Acetone	ND	0.062		mg/Kg-dry	1	7/1/2013
Benzene	ND	0.0041		mg/Kg-dry	1	7/1/2013
Bromodichloromethane	ND	0.0041		mg/Kg-dry	1	7/1/2013
Bromoform	ND	0.0041		mg/Kg-dry	1	7/1/2013
Bromomethane	ND	0.0083		mg/Kg-dry	1	7/1/2013
2-Butanone	ND	0.062		mg/Kg-dry	1	7/1/2013

Qualifiers:
ND - Not Detected at the Reporting Limit
J - Analyte detected below quantitation limits
B - Analyte detected in the associated Method Blank
HT - Sample received past holding time
* - Non-accredited parameter
RL - Reporting / Quantitation Limit for the analysis
S - Spike Recovery outside accepted recovery limits
R - RPD outside accepted recovery limits
E - Value above quantitation range
H - Holding time exceeded

STAT Analysis Corporation
2242 West Harrison St., Suite 200, Chicago, IL 60612-3766
Tel: (312) 733-0551 Fax: (312) 733-2386 STATinfo@STATAnalysis.com
Accreditation Numbers: IEPA ELAP 100445; ORELAP IL300001; AIHA 101160; NVLAP LabCode 101202-

Date Reported: July 24, 2013
Date Printed: July 24, 2013

Client: Terracon Consultants, Inc.
Lab Order: 13060872
Project: A2137008, 650 West 83rd
Lab ID: 13060872-001

Client Sample ID: B-34 (1-3)
Collection Date: 6/25/2013 8:50:00 AM
Matrix: Soil

Analyses	Result	RL	Qualifier	Units	DF	Date Analyzed
Volatile Organic Compounds by GC/MS	**SW5035/8260B**			Prep Date: **6/26/2013**		Analyst: **PS**
Carbon disulfide	ND	0.041		mg/Kg-dry	1	7/1/2013
Carbon tetrachloride	ND	0.0041		mg/Kg-dry	1	7/1/2013
Chlorobenzene	ND	0.0041		mg/Kg-dry	1	7/1/2013
Chloroethane	ND	0.0083		mg/Kg-dry	1	7/1/2013
Chloroform	ND	0.0041		mg/Kg-dry	1	7/1/2013
Chloromethane	ND	0.0083		mg/Kg-dry	1	7/1/2013
Dibromochloromethane	ND	0.0041		mg/Kg-dry	1	7/1/2013
1,1-Dichloroethane	ND	0.0041		mg/Kg-dry	1	7/1/2013
1,2-Dichloroethane	ND	0.0041		mg/Kg-dry	1	7/1/2013
1,1-Dichloroethene	ND	0.0041		mg/Kg-dry	1	7/1/2013
cis-1,2-Dichloroethene	ND	0.0041		mg/Kg-dry	1	7/1/2013
trans-1,2-Dichloroethene	ND	0.0041		mg/Kg-dry	1	7/1/2013
1,2-Dichloropropane	ND	0.0041		mg/Kg-dry	1	7/1/2013
cis-1,3-Dichloropropene	ND	0.0017		mg/Kg-dry	1	7/1/2013
trans-1,3-Dichloropropene	ND	0.0017		mg/Kg-dry	1	7/1/2013
Ethylbenzene	ND	0.0041		mg/Kg-dry	1	7/1/2013
2-Hexanone	ND	0.017		mg/Kg-dry	1	7/1/2013
4-Methyl-2-pentanone	ND	0.017		mg/Kg-dry	1	7/1/2013
Methylene chloride	ND	0.0083		mg/Kg-dry	1	7/1/2013
Methyl tert-butyl ether	ND	0.0041		mg/Kg-dry	1	7/1/2013
Styrene	ND	0.0041		mg/Kg-dry	1	7/1/2013
1,1,2,2-Tetrachloroethane	ND	0.0041		mg/Kg-dry	1	7/1/2013
Tetrachloroethene	ND	0.0041		mg/Kg-dry	1	7/1/2013
Toluene	ND	0.0041		mg/Kg-dry	1	7/1/2013
1,1,1-Trichloroethane	ND	0.0041		mg/Kg-dry	1	7/1/2013
1,1,2-Trichloroethane	ND	0.0041		mg/Kg-dry	1	7/1/2013
Trichloroethene	ND	0.0041		mg/Kg-dry	1	7/1/2013
Vinyl chloride	ND	0.0041		mg/Kg-dry	1	7/1/2013
Xylenes, Total	ND	0.012		mg/Kg-dry	1	7/1/2013
Cyanide, Total	**SW9012A**			Prep Date: **6/26/2013**		Analyst: **MDDT**
Cyanide	ND	0.3		mg/Kg-dry	1	6/27/2013
pH (25 °C)	**SW9045C**			Prep Date: **6/26/2013**		Analyst: **RW**
pH	9.2			pH Units	1	6/26/2013
Percent Moisture	**D2974**			Prep Date: **6/27/2013**		Analyst: **SDA**
Percent Moisture	17.4	0.2	*	wt%	1	6/27/2013

Qualifiers:
ND - Not Detected at the Reporting Limit
J - Analyte detected below quantitation limits
B - Analyte detected in the associated Method Blank
HT - Sample received past holding time
* - Non-accredited parameter
RL - Reporting / Quantitation Limit for the analysis
S - Spike Recovery outside accepted recovery limits
R - RPD outside accepted recovery limits
E - Value above quantitation range
H - Holding time exceeded

STAT Analysis Corporation
2242 West Harrison St., Suite 200, Chicago, IL 60612-3766
Tel: (312) 733-0551 Fax: (312) 733-2386 STATinfo@STATAnalysis.com
Accreditation Numbers: IEPA ELAP 100445; ORELAP IL300001; AIHA 101160; NVLAP LabCode 101202-

Date Reported: July 24, 2013
Date Printed: July 24, 2013

Client: Terracon Consultants, Inc.
Lab Order: 13060872
Project: A2137008, 650 West 83rd
Lab ID: 13060872-002

Client Sample ID: B-34 (4-6)
Collection Date: 6/25/2013 9:00:00 AM
Matrix: Soil

Analyses	Result	RL	Qualifier	Units	DF	Date Analyzed
Mercury	**SW7471A**			Prep Date: **6/28/2013**		Analyst: **LB**
Mercury	ND	0.02		mg/Kg-dry	1	6/28/2013
Metals by ICP/MS	**SW6020 (SW3050B)**			Prep Date: **7/1/2013**		Analyst: **JG**
Arsenic	2.4	1.3		mg/Kg-dry	10	7/1/2013
Barium	45	1.3		mg/Kg-dry	10	7/1/2013
Cadmium	ND	0.63		mg/Kg-dry	10	7/1/2013
Chromium	13	1.3		mg/Kg-dry	10	7/1/2013
Lead	19	0.63		mg/Kg-dry	10	7/1/2013
Selenium	ND	1.3		mg/Kg-dry	10	7/1/2013
Silver	ND	1.3		mg/Kg-dry	10	7/1/2013
Semivolatile Organic Compounds by GC/MS	**SW8270C (SW3550B)**			Prep Date: **6/26/2013**		Analyst: **DM**
Acenaphthene	ND	0.043		mg/Kg-dry	1	6/28/2013
Acenaphthylene	ND	0.043		mg/Kg-dry	1	6/28/2013
Anthracene	0.043	0.043		mg/Kg-dry	1	6/28/2013
Benz(a)anthracene	0.1	0.043		mg/Kg-dry	1	6/28/2013
Benzo(a)pyrene	0.098	0.043		mg/Kg-dry	1	6/28/2013
Benzo(b)fluoranthene	0.073	0.043		mg/Kg-dry	1	6/28/2013
Benzo(g,h,i)perylene	0.051	0.043		mg/Kg-dry	1	6/28/2013
Benzo(k)fluoranthene	0.08	0.043		mg/Kg-dry	1	6/28/2013
Chrysene	0.14	0.043		mg/Kg-dry	1	6/28/2013
Dibenz(a,h)anthracene	ND	0.043		mg/Kg-dry	1	6/28/2013
Fluoranthene	0.2	0.043		mg/Kg-dry	1	6/28/2013
Fluorene	ND	0.043		mg/Kg-dry	1	6/28/2013
Indeno(1,2,3-cd)pyrene	ND	0.043		mg/Kg-dry	1	6/28/2013
Naphthalene	ND	0.043		mg/Kg-dry	1	6/28/2013
Phenanthrene	0.22	0.043		mg/Kg-dry	1	6/28/2013
Pyrene	0.26	0.043		mg/Kg-dry	1	6/28/2013
BTEX by GC/MS	**SW5035/8260B**			Prep Date: **6/26/2013**		Analyst: **PS**
Benzene	ND	0.0067		mg/Kg-dry	1	7/1/2013
Ethylbenzene	ND	0.0067		mg/Kg-dry	1	7/1/2013
Toluene	ND	0.0067		mg/Kg-dry	1	7/1/2013
Xylenes, Total	ND	0.02		mg/Kg-dry	1	7/1/2013
Percent Moisture	**D2974**			Prep Date: **6/27/2013**		Analyst: **SDA**
Percent Moisture	24.2	0.2	*	wt%	1	6/27/2013

Qualifiers:
ND - Not Detected at the Reporting Limit
J - Analyte detected below quantitation limits
B - Analyte detected in the associated Method Blank
HT - Sample received past holding time
* - Non-accredited parameter
RL - Reporting / Quantitation Limit for the analysis
S - Spike Recovery outside accepted recovery limits
R - RPD outside accepted recovery limits
E - Value above quantitation range
H - Holding time exceeded

STAT Analysis Corporation
2242 West Harrison St., Suite 200, Chicago, IL 60612-3766
Tel: (312) 733-0551 Fax: (312) 733-2386 STATinfo@STATAnalysis.com
Accreditation Numbers: IEPA ELAP 100445; ORELAP IL300001; AIHA 101160; NVLAP LabCode 101202-

Date Reported: July 24, 2013
Date Printed: July 24, 2013

Client: Terracon Consultants, Inc.
Lab Order: 13060872
Project: A2137008, 650 West 83rd
Lab ID: 13060872-003

Client Sample ID: B-10 (1-3)
Collection Date: 6/25/2013 9:30:00 AM
Matrix: Soil

Analyses	Result	RL	Qualifier	Units	DF	Date Analyzed
Mercury	**SW7471A**			Prep Date: **6/28/2013**		Analyst: **LB**
Mercury	0.026	0.021		mg/Kg-dry	1	6/28/2013
Metals by ICP/MS	**SW6020 (SW3050B)**			Prep Date: **7/1/2013**		Analyst: **JG**
Arsenic	11	1.1		mg/Kg-dry	10	7/1/2013
Barium	41	1.1		mg/Kg-dry	10	7/1/2013
Cadmium	ND	0.55		mg/Kg-dry	10	7/1/2013
Chromium	17	1.1		mg/Kg-dry	10	7/1/2013
Lead	31	0.55		mg/Kg-dry	10	7/1/2013
Selenium	ND	1.1		mg/Kg-dry	10	7/1/2013
Silver	ND	1.1		mg/Kg-dry	10	7/1/2013
Semivolatile Organic Compounds by GC/MS	**SW8270C (SW3550B)**			Prep Date: **6/26/2013**		Analyst: **DM**
Acenaphthene	0.13	0.037		mg/Kg-dry	1	6/28/2013
Acenaphthylene	0.067	0.037		mg/Kg-dry	1	6/28/2013
Anthracene	0.4	0.037		mg/Kg-dry	1	6/28/2013
Benz(a)anthracene	0.83	0.037		mg/Kg-dry	1	6/28/2013
Benzo(a)pyrene	0.76	0.037		mg/Kg-dry	1	6/28/2013
Benzo(b)fluoranthene	0.77	0.037		mg/Kg-dry	1	6/28/2013
Benzo(g,h,i)perylene	0.52	0.037		mg/Kg-dry	1	6/28/2013
Benzo(k)fluoranthene	0.74	0.037		mg/Kg-dry	1	6/28/2013
Chrysene	0.86	0.037		mg/Kg-dry	1	6/28/2013
Dibenz(a,h)anthracene	0.25	0.037		mg/Kg-dry	1	6/28/2013
Fluoranthene	2.2	0.037		mg/Kg-dry	1	6/28/2013
Fluorene	0.32	0.037		mg/Kg-dry	1	6/28/2013
Indeno(1,2,3-cd)pyrene	0.48	0.037		mg/Kg-dry	1	6/28/2013
Naphthalene	0.3	0.037		mg/Kg-dry	1	6/28/2013
Phenanthrene	1.9	0.037		mg/Kg-dry	1	6/28/2013
Pyrene	1.7	0.037		mg/Kg-dry	1	6/28/2013
BTEX by GC/MS	**SW5035/8260B**			Prep Date: **6/26/2013**		Analyst: **PS**
Benzene	ND	0.0043		mg/Kg-dry	1	7/1/2013
Ethylbenzene	ND	0.0043		mg/Kg-dry	1	7/1/2013
Toluene	ND	0.0043		mg/Kg-dry	1	7/1/2013
Xylenes, Total	ND	0.013		mg/Kg-dry	1	7/1/2013
Percent Moisture	**D2974**			Prep Date: **6/27/2013**		Analyst: **SDA**
Percent Moisture	12.0	0.2	*	wt%	1	6/27/2013

Qualifiers:
ND - Not Detected at the Reporting Limit
J - Analyte detected below quantitation limits
B - Analyte detected in the associated Method Blank
HT - Sample received past holding time
* - Non-accredited parameter
RL - Reporting / Quantitation Limit for the analysis
S - Spike Recovery outside accepted recovery limits
R - RPD outside accepted recovery limits
E - Value above quantitation range
H - Holding time exceeded

STAT Analysis Corporation
2242 West Harrison St., Suite 200, Chicago, IL 60612-3766
Tel: (312) 733-0551 Fax: (312) 733-2386 STATinfo@STATAnalysis.com
Accreditation Numbers: IEPA ELAP 100445; ORELAP IL300001; AIHA 101160; NVLAP LabCode 101202-

Date Reported: July 24, 2013
Date Printed: July 24, 2013

Client: Terracon Consultants, Inc.
Lab Order: 13060872
Project: A2137008, 650 West 83rd
Lab ID: 13060872-004

Client Sample ID: B-10 (4-6)
Collection Date: 6/25/2013 10:00:00 AM
Matrix: Soil

Analyses	Result	RL	Qualifier	Units	DF	Date Analyzed
Mercury	**SW7471A**			Prep Date: **6/28/2013**		Analyst: **LB**
Mercury	0.5	0.02		mg/Kg-dry	1	6/28/2013
Metals by ICP/MS	**SW6020 (SW3050B)**			Prep Date: **7/1/2013**		Analyst: **JG**
Arsenic	7.2	1.2		mg/Kg-dry	10	7/1/2013
Barium	80	1.2		mg/Kg-dry	10	7/1/2013
Cadmium	ND	0.61		mg/Kg-dry	10	7/1/2013
Chromium	17	1.2		mg/Kg-dry	10	7/1/2013
Lead	76	0.61		mg/Kg-dry	10	7/1/2013
Selenium	ND	1.2		mg/Kg-dry	10	7/1/2013
Silver	ND	1.2		mg/Kg-dry	10	7/1/2013
Semivolatile Organic Compounds by GC/MS	**SW8270C (SW3550B)**			Prep Date: **6/26/2013**		Analyst: **DM**
Acenaphthene	0.077	0.043		mg/Kg-dry	1	7/1/2013
Acenaphthylene	ND	0.043		mg/Kg-dry	1	7/1/2013
Anthracene	0.17	0.043		mg/Kg-dry	1	7/1/2013
Benz(a)anthracene	0.49	0.043		mg/Kg-dry	1	7/1/2013
Benzo(a)pyrene	0.52	0.043		mg/Kg-dry	1	7/1/2013
Benzo(b)fluoranthene	0.55	0.043		mg/Kg-dry	1	7/1/2013
Benzo(g,h,i)perylene	0.32	0.043		mg/Kg-dry	1	7/1/2013
Benzo(k)fluoranthene	0.39	0.043		mg/Kg-dry	1	7/1/2013
Chrysene	0.59	0.043		mg/Kg-dry	1	7/1/2013
Dibenz(a,h)anthracene	0.17	0.043		mg/Kg-dry	1	7/1/2013
Fluoranthene	0.96	0.043		mg/Kg-dry	1	7/1/2013
Fluorene	0.065	0.043		mg/Kg-dry	1	7/1/2013
Indeno(1,2,3-cd)pyrene	0.28	0.043		mg/Kg-dry	1	7/1/2013
Naphthalene	0.15	0.043		mg/Kg-dry	1	7/1/2013
Phenanthrene	0.66	0.043		mg/Kg-dry	1	7/1/2013
Pyrene	0.93	0.043		mg/Kg-dry	1	7/1/2013
BTEX by GC/MS	**SW5035/8260B**			Prep Date: **6/26/2013**		Analyst: **PS**
Benzene	ND	0.0068		mg/Kg-dry	1	7/1/2013
Ethylbenzene	ND	0.0068		mg/Kg-dry	1	7/1/2013
Toluene	ND	0.0068		mg/Kg-dry	1	7/1/2013
Xylenes, Total	ND	0.02		mg/Kg-dry	1	7/1/2013
Percent Moisture	**D2974**			Prep Date: **6/27/2013**		Analyst: **SDA**
Percent Moisture	22.7	0.2	*	wt%	1	6/27/2013

Qualifiers:
ND - Not Detected at the Reporting Limit
J - Analyte detected below quantitation limits
B - Analyte detected in the associated Method Blank
HT - Sample received past holding time
* - Non-accredited parameter
RL - Reporting / Quantitation Limit for the analysis
S - Spike Recovery outside accepted recovery limits
R - RPD outside accepted recovery limits
E - Value above quantitation range
H - Holding time exceeded

STAT Analysis Corporation
2242 West Harrison St., Suite 200, Chicago, IL 60612-3766
Tel: (312) 733-0551 Fax: (312) 733-2386 STATinfo@STATAnalysis.com
Accreditation Numbers: IEPA ELAP 100445; ORELAP IL300001; AIHA 101160; NVLAP LabCode 101202-

Date Reported: July 24, 2013
Date Printed: July 24, 2013

Client: Terracon Consultants, Inc.
Lab Order: 13060872
Project: A2137008, 650 West 83rd
Lab ID: 13060872-005

Client Sample ID: B-6 (1-3)
Collection Date: 6/25/2013 11:30:00 AM
Matrix: Soil

Analyses	Result	RL	Qualifier	Units	DF	Date Analyzed
Mercury	**SW7471A**			Prep Date: **6/28/2013**		Analyst: **LB**
Mercury	ND	0.023		mg/Kg-dry	1	6/28/2013
Metals by ICP/MS	**SW6020 (SW3050B)**			Prep Date: **7/1/2013**		Analyst: **JG**
Arsenic	16	1.1		mg/Kg-dry	10	7/1/2013
Barium	63	1.1		mg/Kg-dry	10	7/1/2013
Cadmium	0.59	0.55		mg/Kg-dry	10	7/1/2013
Chromium	22	1.1		mg/Kg-dry	10	7/1/2013
Lead	24	0.55		mg/Kg-dry	10	7/1/2013
Selenium	ND	1.1		mg/Kg-dry	10	7/1/2013
Silver	ND	1.1		mg/Kg-dry	10	7/1/2013
Semivolatile Organic Compounds by GC/MS	**SW8270C (SW3550B)**			Prep Date: **6/26/2013**		Analyst: **DM**
Acenaphthene	2	0.038		mg/Kg-dry	1	6/28/2013
Acenaphthylene	0.059	0.038		mg/Kg-dry	1	6/28/2013
Anthracene	7.2	0.38		mg/Kg-dry	10	7/1/2013
Benz(a)anthracene	7.4	0.38		mg/Kg-dry	10	7/1/2013
Benzo(a)pyrene	6.4	0.38		mg/Kg-dry	10	7/1/2013
Benzo(b)fluoranthene	4.4	0.038		mg/Kg-dry	1	6/28/2013
Benzo(g,h,i)perylene	2.5	0.038		mg/Kg-dry	1	6/28/2013
Benzo(k)fluoranthene	4.1	0.038		mg/Kg-dry	1	6/28/2013
Chrysene	6.6	0.38		mg/Kg-dry	10	7/1/2013
Dibenz(a,h)anthracene	1.3	0.038		mg/Kg-dry	1	6/28/2013
Fluoranthene	21	0.38		mg/Kg-dry	10	7/1/2013
Fluorene	3.4	0.038		mg/Kg-dry	1	6/28/2013
Indeno(1,2,3-cd)pyrene	2.4	0.038		mg/Kg-dry	1	6/28/2013
Naphthalene	0.75	0.038		mg/Kg-dry	1	6/28/2013
Phenanthrene	22	0.38		mg/Kg-dry	10	7/1/2013
Pyrene	16	0.38		mg/Kg-dry	10	7/1/2013
BTEX by GC/MS	**SW5035/8260B**			Prep Date: **6/26/2013**		Analyst: **PS**
Benzene	ND	0.0044		mg/Kg-dry	1	7/1/2013
Ethylbenzene	ND	0.0044		mg/Kg-dry	1	7/1/2013
Toluene	ND	0.0044		mg/Kg-dry	1	7/1/2013
Xylenes, Total	ND	0.013		mg/Kg-dry	1	7/1/2013
Percent Moisture	**D2974**			Prep Date: **6/27/2013**		Analyst: **SDA**
Percent Moisture	14.7	0.2	*	wt%	1	6/27/2013

Qualifiers:
ND - Not Detected at the Reporting Limit
J - Analyte detected below quantitation limits
B - Analyte detected in the associated Method Blank
HT - Sample received past holding time
* - Non-accredited parameter
RL - Reporting / Quantitation Limit for the analysis
S - Spike Recovery outside accepted recovery limits
R - RPD outside accepted recovery limits
E - Value above quantitation range
H - Holding time exceeded

STAT Analysis Corporation
2242 West Harrison St., Suite 200, Chicago, IL 60612-3766
Tel: (312) 733-0551 Fax: (312) 733-2386 STATinfo@STATAnalysis.com
Accreditation Numbers: IEPA ELAP 100445; ORELAP IL300001; AIHA 101160; NVLAP LabCode 101202-

Date Reported: July 24, 2013
Date Printed: July 24, 2013

Client: Terracon Consultants, Inc.
Lab Order: 13060872
Project: A2137008, 650 West 83rd
Lab ID: 13060872-006

Client Sample ID: B-6 (6-8)
Collection Date: 6/25/2013 11:45:00 AM
Matrix: Soil

Analyses	Result	RL	Qualifier	Units	DF	Date Analyzed
Mercury	**SW7471A**			Prep Date: **6/28/2013**		Analyst: **LB**
Mercury	ND	0.025		mg/Kg-dry	1	6/28/2013
Metals by ICP/MS	**SW6020 (SW3050B)**			Prep Date: **7/1/2013**		Analyst: **JG**
Arsenic	4.4	1.2		mg/Kg-dry	10	7/1/2013
Barium	120	1.2		mg/Kg-dry	10	7/1/2013
Cadmium	6.8	0.59		mg/Kg-dry	10	7/1/2013
Chromium	12	1.2		mg/Kg-dry	10	7/1/2013
Lead	19	0.59		mg/Kg-dry	10	7/1/2013
Selenium	1.2	1.2		mg/Kg-dry	10	7/1/2013
Silver	ND	1.2		mg/Kg-dry	10	7/1/2013
Semivolatile Organic Compounds by GC/MS	**SW8270C (SW3550B)**			Prep Date: **6/26/2013**		Analyst: **DM**
Acenaphthene	0.087	0.042		mg/Kg-dry	1	6/28/2013
Acenaphthylene	0.078	0.042		mg/Kg-dry	1	6/28/2013
Anthracene	0.32	0.042		mg/Kg-dry	1	6/28/2013
Benz(a)anthracene	0.95	0.042		mg/Kg-dry	1	6/28/2013
Benzo(a)pyrene	0.87	0.042		mg/Kg-dry	1	6/28/2013
Benzo(b)fluoranthene	1	0.042		mg/Kg-dry	1	6/28/2013
Benzo(g,h,i)perylene	0.53	0.042		mg/Kg-dry	1	6/28/2013
Benzo(k)fluoranthene	0.64	0.042		mg/Kg-dry	1	6/28/2013
Chrysene	1.1	0.042		mg/Kg-dry	1	6/28/2013
Dibenz(a,h)anthracene	0.27	0.042		mg/Kg-dry	1	6/28/2013
Fluoranthene	2.4	0.042		mg/Kg-dry	1	6/28/2013
Fluorene	0.14	0.042		mg/Kg-dry	1	6/28/2013
Indeno(1,2,3-cd)pyrene	0.47	0.042		mg/Kg-dry	1	6/28/2013
Naphthalene	0.078	0.042		mg/Kg-dry	1	6/28/2013
Phenanthrene	1.9	0.042		mg/Kg-dry	1	6/28/2013
Pyrene	1.9	0.042		mg/Kg-dry	1	6/28/2013
BTEX by GC/MS	**SW5035/8260B**			Prep Date: **6/26/2013**		Analyst: **PS**
Benzene	ND	0.0078		mg/Kg-dry	1	7/1/2013
Ethylbenzene	ND	0.0078		mg/Kg-dry	1	7/1/2013
Toluene	ND	0.0078		mg/Kg-dry	1	7/1/2013
Xylenes, Total	ND	0.023		mg/Kg-dry	1	7/1/2013
Percent Moisture	**D2974**			Prep Date: **6/27/2013**		Analyst: **SDA**
Percent Moisture	22.6	0.2	*	wt%	1	6/27/2013

Qualifiers:
ND - Not Detected at the Reporting Limit
J - Analyte detected below quantitation limits
B - Analyte detected in the associated Method Blank
HT - Sample received past holding time
* - Non-accredited parameter
RL - Reporting / Quantitation Limit for the analysis
S - Spike Recovery outside accepted recovery limits
R - RPD outside accepted recovery limits
E - Value above quantitation range
H - Holding time exceeded

STAT Analysis Corporation
2242 West Harrison St., Suite 200, Chicago, IL 60612-3766
Tel: (312) 733-0551 Fax: (312) 733-2386 STATinfo@STATAnalysis.com
Accreditation Numbers: IEPA ELAP 100445; ORELAP IL300001; AIHA 101160; NVLAP LabCode 101202-

Date Reported: July 24, 2013
Date Printed: July 24, 2013

Client: Terracon Consultants, Inc.
Lab Order: 13060872
Project: A2137008, 650 West 83rd
Lab ID: 13060872-007

Client Sample ID: B-5 (1-3)
Collection Date: 6/25/2013 10:20:00 AM
Matrix: Soil

Analyses	Result	RL	Qualifier	Units	DF	Date Analyzed
Mercury	**SW7471A**			Prep Date: **6/28/2013**		Analyst: **LB**
Mercury	0.65	0.02		mg/Kg-dry	1	6/28/2013
Metals by ICP/MS	**SW6020 (SW3050B)**			Prep Date: **7/1/2013**		Analyst: **JG**
Arsenic	29	1.1		mg/Kg-dry	10	7/1/2013
Barium	2500	1.1		mg/Kg-dry	10	7/1/2013
Cadmium	6.6	0.55		mg/Kg-dry	10	7/1/2013
Chromium	64	1.1		mg/Kg-dry	10	7/1/2013
Lead	3600	0.55		mg/Kg-dry	10	7/1/2013
Selenium	1.9	1.1		mg/Kg-dry	10	7/1/2013
Silver	2	1.1		mg/Kg-dry	10	7/1/2013
TCLP Metals by ICP/MS	**SW1311/6020 (SW3005A)**			Prep Date: **7/17/2013**		Analyst: **JG**
Lead	1.1	0.005		mg/L	5	7/17/2013
Semivolatile Organic Compounds by GC/MS	**SW8270C (SW3550B)**			Prep Date: **6/26/2013**		Analyst: **DM**
Acenaphthene	0.43	0.039		mg/Kg-dry	1	6/28/2013
Acenaphthylene	0.095	0.039		mg/Kg-dry	1	6/28/2013
Anthracene	1.6	0.039		mg/Kg-dry	1	6/28/2013
Benz(a)anthracene	3.7	0.039		mg/Kg-dry	1	6/28/2013
Benzo(a)pyrene	3.6	0.039		mg/Kg-dry	1	6/28/2013
Benzo(b)fluoranthene	3.5	0.039		mg/Kg-dry	1	6/28/2013
Benzo(g,h,i)perylene	2	0.039		mg/Kg-dry	1	6/28/2013
Benzo(k)fluoranthene	2.7	0.039		mg/Kg-dry	1	6/28/2013
Chrysene	3.9	0.039		mg/Kg-dry	1	6/28/2013
Dibenz(a,h)anthracene	1.1	0.039		mg/Kg-dry	1	6/28/2013
Fluoranthene	9.6	0.2		mg/Kg-dry	5	7/1/2013
Fluorene	0.53	0.039		mg/Kg-dry	1	6/28/2013
Indeno(1,2,3-cd)pyrene	1.8	0.039		mg/Kg-dry	1	6/28/2013
Naphthalene	0.38	0.039		mg/Kg-dry	1	6/28/2013
Phenanthrene	6.9	0.2		mg/Kg-dry	5	7/1/2013
Pyrene	7.9	0.2		mg/Kg-dry	5	7/1/2013
BTEX by GC/MS	**SW5035/8260B**			Prep Date: **6/26/2013**		Analyst: **PS**
Benzene	ND	0.0054		mg/Kg-dry	1	7/1/2013
Ethylbenzene	ND	0.0054		mg/Kg-dry	1	7/1/2013
Toluene	ND	0.0054		mg/Kg-dry	1	7/1/2013
Xylenes, Total	ND	0.016		mg/Kg-dry	1	7/1/2013
Hexavalent Chromium	**SW7196A (SW3060A)**			Prep Date: **7/23/2013**		Analyst: **YZ**
Chromium, Hexavalent	ND	0.48		mg/Kg-dry	1	7/23/2013

Qualifiers:
ND - Not Detected at the Reporting Limit
J - Analyte detected below quantitation limits
B - Analyte detected in the associated Method Blank
HT - Sample received past holding time
* - Non-accredited parameter
RL - Reporting / Quantitation Limit for the analysis
S - Spike Recovery outside accepted recovery limits
R - RPD outside accepted recovery limits
E - Value above quantitation range
H - Holding time exceeded

STAT Analysis Corporation
2242 West Harrison St., Suite 200, Chicago, IL 60612-3766
Tel: (312) 733-0551 Fax: (312) 733-2386 STATinfo@STATAnalysis.com
Accreditation Numbers: IEPA ELAP 100445; ORELAP IL300001; AIHA 101160; NVLAP LabCode 101202-

Date Reported: July 24, 2013
Date Printed: July 24, 2013

Client:	Terracon Consultants, Inc.	**Client Sample ID:**	B-5 (1-3)
Lab Order:	13060872	**Collection Date:**	6/25/2013 10:20:00 AM
Project:	A2137008, 650 West 83rd	**Matrix:**	Soil
Lab ID:	13060872-007		

Analyses	Result	RL	Qualifier	Units	DF	Date Analyzed
Percent Moisture	**D2974**			Prep Date: **6/27/2013**		Analyst: **SDA**
Percent Moisture	16.6	0.2	*	wt%	1	6/27/2013

Qualifiers:
- ND - Not Detected at the Reporting Limit
- J - Analyte detected below quantitation limits
- B - Analyte detected in the associated Method Blank
- HT - Sample received past holding time
- * - Non-accredited parameter
- RL - Reporting / Quantitation Limit for the analysis
- S - Spike Recovery outside accepted recovery limits
- R - RPD outside accepted recovery limits
- E - Value above quantitation range
- H - Holding time exceeded

STAT Analysis Corporation
2242 West Harrison St., Suite 200, Chicago, IL 60612-3766
Tel: (312) 733-0551 Fax: (312) 733-2386 STATinfo@STATAnalysis.com
Accreditation Numbers: IEPA ELAP 100445; ORELAP IL300001; AIHA 101160; NVLAP LabCode 101202-

Date Reported: July 24, 2013
Date Printed: July 24, 2013

Client: Terracon Consultants, Inc.
Lab Order: 13060872
Project: A2137008, 650 West 83rd
Lab ID: 13060872-008

Client Sample ID: B-5 (4-6)
Collection Date: 6/25/2013 10:30:00 AM
Matrix: Soil

Analyses	Result	RL	Qualifier	Units	DF	Date Analyzed
Mercury	**SW7471A**			Prep Date: **6/28/2013**		Analyst: **LB**
Mercury	0.078	0.018		mg/Kg-dry	1	6/28/2013
Metals by ICP/MS	**SW6020 (SW3050B)**			Prep Date: **7/1/2013**		Analyst: **JG**
Arsenic	7.1	1.1		mg/Kg-dry	10	7/1/2013
Barium	290	1.1		mg/Kg-dry	10	7/1/2013
Cadmium	ND	0.53		mg/Kg-dry	10	7/1/2013
Chromium	20	1.1		mg/Kg-dry	10	7/1/2013
Lead	370	0.53		mg/Kg-dry	10	7/1/2013
Selenium	ND	1.1		mg/Kg-dry	10	7/1/2013
Silver	ND	1.1		mg/Kg-dry	10	7/1/2013
Semivolatile Organic Compounds by GC/MS	**SW8270C (SW3550B)**			Prep Date: **6/26/2013**		Analyst: **DM**
Acenaphthene	ND	0.037		mg/Kg-dry	1	6/28/2013
Acenaphthylene	ND	0.037		mg/Kg-dry	1	6/28/2013
Anthracene	0.044	0.037		mg/Kg-dry	1	6/28/2013
Benz(a)anthracene	0.13	0.037		mg/Kg-dry	1	6/28/2013
Benzo(a)pyrene	0.17	0.037		mg/Kg-dry	1	6/28/2013
Benzo(b)fluoranthene	0.16	0.037		mg/Kg-dry	1	6/28/2013
Benzo(g,h,i)perylene	0.12	0.037		mg/Kg-dry	1	6/28/2013
Benzo(k)fluoranthene	0.12	0.037		mg/Kg-dry	1	6/28/2013
Chrysene	0.18	0.037		mg/Kg-dry	1	6/28/2013
Dibenz(a,h)anthracene	ND	0.037		mg/Kg-dry	1	6/28/2013
Fluoranthene	0.22	0.037		mg/Kg-dry	1	6/28/2013
Fluorene	ND	0.037		mg/Kg-dry	1	6/28/2013
Indeno(1,2,3-cd)pyrene	0.086	0.037		mg/Kg-dry	1	6/28/2013
Naphthalene	ND	0.037		mg/Kg-dry	1	6/28/2013
Phenanthrene	0.11	0.037		mg/Kg-dry	1	6/28/2013
Pyrene	0.24	0.037		mg/Kg-dry	1	6/28/2013
BTEX by GC/MS	**SW5035/8260B**			Prep Date: **6/26/2013**		Analyst: **PS**
Benzene	ND	0.0057		mg/Kg-dry	1	7/1/2013
Ethylbenzene	ND	0.0057		mg/Kg-dry	1	7/1/2013
Toluene	ND	0.0057		mg/Kg-dry	1	7/1/2013
Xylenes, Total	ND	0.017		mg/Kg-dry	1	7/1/2013
Percent Moisture	**D2974**			Prep Date: **6/27/2013**		Analyst: **SDA**
Percent Moisture	11.5	0.2	*	wt%	1	6/27/2013

Qualifiers:
ND - Not Detected at the Reporting Limit
J - Analyte detected below quantitation limits
B - Analyte detected in the associated Method Blank
HT - Sample received past holding time
* - Non-accredited parameter
RL - Reporting / Quantitation Limit for the analysis
S - Spike Recovery outside accepted recovery limits
R - RPD outside accepted recovery limits
E - Value above quantitation range
H - Holding time exceeded

STAT Analysis Corporation
2242 W. Harrison, Suite 200, Chicago, Illinois 60612 Phone: (312) 733-0551 Fax: (312) 733-2386
e-mail address: STATinfo@STATAnalysis.com AIHA, NVLAP and NELAP accredited

CHAIN OF CUSTODY RECORD

Nº: 850441 Page : ____ of ____

Company: Terracon
Project Number: 42137008 Client Tracking No.:
Project Name: 650 west 83rd
Project Location: Chicago, IL
Sampler(s): J. Sylvia
Report To: Richard O'Brien Phone:
Fax:
QC Level: 1 ____ 2 ____ 3 ____ 4 ____ e-mail: rmobrien@terracon.com

P.O. No.:
Quote No.:

Turn Around: STANDARD
Results Needed: / / am/pm

Client Sample Number/Description:	Date Taken	Time Taken	Matrix	Comp.	Grab	Preserv.	No. of Containers	VOC	SVOC	Pesticides PCB	TAL Inorganics	Herbicides	BTEX	PNA	RCRA metals	Remarks	Lab No:
B-34 (1-3)	6-25-13	850	S		X		4	X	X	X	X	X	##				01
B-34 (4-6)	↓	900	S		X		4						X	X	X	##	02
B-10 (1-3)		930	S		X		4						X	X	X		03
B-10 (4-6)		1000	S		X		4						X	X	X		04
B-6 (1-3)		1130	S		X		4						X	X	X		05
B-6 (6-8)		1145	S		X		4						X	X	X		06
B-5 (1-3)		1020	S		X		4						X	X	X		07
B-5 (4-6)	↓	1030	S		X		4						X	X	X		08

Relinquished by: (Signature)	Date/Time: 6/25/13	1411
Received by: (Signature)	Date/Time: 6/25/13	14:11
Relinquished by: (Signature)	Date/Time: 6/25/13	15:15
Received by: (Signature)	Date/Time: 6/25/13	1515
Relinquished by: (Signature)	Date/Time:	
Received by: (Signature)	Date/Time:	

Comments:

Preservation Code: A = None B = HNO_3 C = NaOH
D = H_2SO_4 E = HCl F = 5035/EnCore G = Other

Laboratory Work Order No.: 13060542

Received on Ice: Yes [X] No [ ]
Temperature: 3.1 °C

STAT Analysis Corporation

Sample Receipt Checklist

Client Name TERRACON - CHICAGO

Date and Time Received: 6/25/2013 3:15:00 PM

Work Order Number 13060872

Received by: TJW

Checklist completed by: _____ 6/25/13 (Signature / Date)

Reviewed by: _____ 6/26/13 (Initials / Date)

Matrix: Carrier name Client Delivered

Shipping container/cooler in good condition?	Yes ☑	No ☐	Not Present ☐
Custody seals intact on shippping container/cooler?	Yes ☐	No ☐	Not Present ☑
Custody seals intact on sample bottles?	Yes ☐	No ☐	Not Present ☑
Chain of custody present?	Yes ☑	No ☐	
Chain of custody signed when relinquished and received?	Yes ☑	No ☐	
Chain of custody agrees with sample labels/containers?	Yes ☑	No ☐	
Samples in proper container/bottle?	Yes ☑	No ☐	
Sample containers intact?	Yes ☑	No ☐	
Sufficient sample volume for indicated test?	Yes ☑	No ☐	
All samples received within holding time?	Yes ☑	No ☐	
Container or Temp Blank temperature in compliance?	Yes ☑	No ☐	Temperature 3.4 °C
Water - VOA vials have zero headspace?	No VOA vials submitted ☐	Yes ☐	No ☐
Water - Samples pH checked?	Yes ☐	No ☐	Checked by:
Water - Samples properly preserved?	Yes ☐	No ☐	pH Adjusted?

Any No response must be detailed in the comments section below.

Comments:

Client / Person contacted: Date contacted: Contacted by:

Response:

Craig Chawla

From: O'Brien, Richard M [rmobrien@terracon.com]
Sent: Tuesday, July 16, 2013 7:57 AM
To: Craig Chawla
Subject: A2137008, 650 West 83rd

Hi Eamon,

Regarding the samples we submitted for A2137008, 650 West 83rd, please analyze the following on standard turnaround:

B-5(1-3) Hexavalent Chromium
B-5(1-3) TCLP Lead
B-11(1-3) TCLP Lead
B-16(4-6) TCLP Lead

B-1(4-6) foc
B-16(1-3) foc

Thanks,

Richard O'Brien, P.E.
Senior Project Engineer
Environmental Services

Terracon Consultants, Inc.
650 West Lake Street, Suite 420 I Chicago, IL 60661
P [312] 575-0014 I F [312] 575-0111 I C [312] 443-2958
rmobrien@terracon.com I terracon.com

From: Craig Chawla [mailto:cchawla@statanalysis.com]
Sent: Monday, July 15, 2013 7:33 PM
To: O'Brien, Richard M
Subject: A2137008, 650 West 83rd 13060872

Richard,

Attached is the invoice for project A2137008, 650 West 83rd received 6/25/2013.

In an effort to increase efficiency and conserve resources, STAT Analysis has adopted paperless reporting. The attached pdf files can be printed as the final copy. You will not receive a hardcopy in the mail. Please review the attached invoice and submit to accounts payable for payment.

Craig Chawla
STAT Analysis Corporation
2242 W. Harrison, Suite 200
Chicago, IL 60612
(312)733-0551

The information contained in this e-mail message and any attachments is confidential information intended only for the use of the individual or entities named above. If the reader of this message is not the intended recipient you are hereby notified that any dissemination, distribution, or copying of this

STAT Analysis Corporation
2242 West Harrison St., Suite 200, Chicago, IL 60612-3766
Tel: (312) 733-0551 Fax: (312) 733-2386 STATinfo@STATAnalysis.com
Accreditation Numbers: IEPA ELAP 100445; ORELAP IL300001;AIHA 101160; NVLAP LabCode 101202-

October 25, 2013

Terracon Consultants, Inc.
650 W. Lake Street
Suite 420
Chicago, IL 60661
Telephone: (312) 575-0014
Fax: (312) 575-0111

RE: A2137008, 650 West 83rd Street STAT Project No 13100756

Dear Richard O'Brien:

STAT Analysis received 14 samples for the referenced project on 10/23/2013 12:03:00 PM. The analytical results are presented in the following report.

All analyses were performed in accordance with the requirements of 35 IAC Part 186 / NELAC standards. Analyses were performed in accordance with methods as referenced on the analytical report. Those analytical results expressed on a dry weight basis are also noted on the analytical report.

All analyses were performed within established holding time criteria, and all Quality Control criteria met EPA or laboratory specifications except when noted in the Case Narrative or Analytical Report. If required, an estimate of uncertainty for the analyses can be provided. A listing of accredited methods/parameters can also be provided.

Thank you for the opportunity to serve you and I look forward to working with you in the future. If you have any questions regarding the enclosed materials, please contact me at (312) 733-0551.

Sincerely,

Craig Chawla
Project Manager

The information contained in this report and any attachments is confidential information intended only for the use of the individual or entities named above. The results of this report relate only to the samples tested. If you have received this report in error, please notify us immediately by phone. This report shall not be reproduced, except in its entirety, unless written approval has been obtained from the laboratory. This analytical report shall become property of the Customer upon payment in full. Otherwise, STAT will be under no obligation to support, defend or discuss the analytical report.

MED

STAT Analysis Corporation

Date: October 25, 2013

Client: Terracon Consultants, Inc.
Project: A2137008, 650 West 83rd Street
Lab Order: 13100756

Work Order Sample Summary

Lab Sample ID	Client Sample ID	Tag Number	Collection Date	Date Received
13100756-001A	B-108B (4'-6')		10/23/2013 10:30:00 AM	10/23/2013
13100756-002A	B-109B (4'-6')		10/23/2013 10:35:00 AM	10/23/2013
13100756-003A	B-110B (4'-6')		10/23/2013 10:10:00 AM	10/23/2013
13100756-004A	B-111B (4'-6')		10/23/2013 10:15:00 AM	10/23/2013
13100756-005A	B-112B (4'-6')		10/23/2013 9:55:00 AM	10/23/2013
13100756-006A	B-113B (4'-6')		10/23/2013 10:00:00 AM	10/23/2013
13100756-007A	B-114B (4'-6')		10/23/2013 9:30:00 AM	10/23/2013
13100756-008A	B-115B (4'-6')		10/23/2013 9:20:00 AM	10/23/2013
13100756-009A	B-116B (1'-3')		10/23/2013 8:45:00 AM	10/23/2013
13100756-010A	B-117B (1'-3')		10/23/2013 8:40:00 AM	10/23/2013
13100756-011A	B-118B (1'-3')		10/23/2013 8:50:00 AM	10/23/2013
13100756-012A	B-120B (1'-3')		10/23/2013 8:55:00 AM	10/23/2013
13100756-013A	B-121B (1-3')		10/23/2013 9:00:00 AM	10/23/2013
13100756-014A	B-134 (4'-6')		10/23/2013 10:40:00 AM	10/23/2013

STAT Analysis Corporation
2242 West Harrison St., Suite 200, Chicago, IL 60612-3766
Tel: (312) 733-0551 Fax: (312) 733-2386 STATinfo@STATAnalysis.com
Accreditation Numbers: IEPA ELAP 100445; ORELAP IL300001; AIHA 101160; NVLAP LabCode 101202

Date Reported: October 25, 2013
Date Printed: October 25, 2013

Client: Terracon Consultants, Inc.
Project: A2137008, 650 West 83rd Street **Lab Order:** 13100756

Lab ID: 13100756-001 **Collection Date** 10/23/2013 10:30:00 AM
Client Sample ID: B-108B (4'-6') **Matrix:** Soil

Analyses	Result	RL	Qualifier	Units	DF	Date Analyzed
TCLP Metals by ICP/MS	**SW1311/6020 (SW3005A)**			Prep Date: **10/24/2013**		Analyst: **JG**
Lead	0.081	0.005		mg/L	5	10/24/2013

Lab ID: 13100756-003 **Collection Date** 10/23/2013 10:10:00 AM
Client Sample ID: B-110B (4'-6') **Matrix:** Soil

Analyses	Result	RL	Qualifier	Units	DF	Date Analyzed
TCLP Metals by ICP/MS	**SW1311/6020 (SW3005A)**			Prep Date: **10/24/2013**		Analyst: **JG**
Lead	0.03	0.005		mg/L	5	10/24/2013

Lab ID: 13100756-005 **Collection Date** 10/23/2013 9:55:00 AM
Client Sample ID: B-112B (4'-6') **Matrix:** Soil

Analyses	Result	RL	Qualifier	Units	DF	Date Analyzed
TCLP Metals by ICP/MS	**SW1311/6020 (SW3005A)**			Prep Date: **10/24/2013**		Analyst: **JG**
Lead	0.0056	0.005		mg/L	5	10/24/2013

Lab ID: 13100756-007 **Collection Date** 10/23/2013 9:30:00 AM
Client Sample ID: B-114B (4'-6') **Matrix:** Soil

Analyses	Result	RL	Qualifier	Units	DF	Date Analyzed
TCLP Metals by ICP/MS	**SW1311/6020 (SW3005A)**			Prep Date: **10/24/2013**		Analyst: **JG**
Lead	0.0073	0.005		mg/L	5	10/24/2013

Lab ID: 13100756-009 **Collection Date** 10/23/2013 8:45:00 AM
Client Sample ID: B-116B (1'-3') **Matrix:** Soil

Analyses	Result	RL	Qualifier	Units	DF	Date Analyzed
TCLP Metals by ICP/MS	**SW1311/6020 (SW3005A)**			Prep Date: **10/24/2013**		Analyst: **JG**
Lead	ND	0.005		mg/L	5	10/24/2013

Qualifiers:
ND - Not Detected at the Reporting Limit
J - Analyte detected below quantitation limits
B - Analyte detected in the associated Method Blank
HT - Sample received past holding time
* - Non-accredited parameter
RL - Reporting / Quantitation Limit for the analysis
S - Spike Recovery outside accepted recovery limits
R - RPD outside accepted recovery limits
E - Value above quantitation range
H - Holding time exceeded

STAT Analysis Corporation
2242 West Harrison St., Suite 200, Chicago, IL 60612-3766
Tel: (312) 733-0551 Fax: (312) 733-2386 STATinfo@STATAnalysis.com
Accreditation Numbers: IEPA ELAP 100445; ORELAP IL300001; AIHA 101160; NVLAP LabCode 101202

Date Reported: October 25, 2013
Date Printed: October 25, 2013

Client: Terracon Consultants, Inc.
Project: A2137008, 650 West 83rd Street **Lab Order:** 13100756

Lab ID: 13100756-011 **Collection Date** 10/23/2013 8:50:00 AM
Client Sample ID: B-118B (1'-3') **Matrix:** Soil

Analyses	Result	RL	Qualifier	Units	DF	Date Analyzed
TCLP Metals by ICP/MS	**SW1311/6020 (SW3005A)**			Prep Date: **10/24/2013**		Analyst: **JG**
Lead	0.16	0.005		mg/L	5	10/24/2013

Lab ID: 13100756-012 **Collection Date** 10/23/2013 8:55:00 AM
Client Sample ID: B-120B (1'-3') **Matrix:** Soil

Analyses	Result	RL	Qualifier	Units	DF	Date Analyzed
TCLP Metals by ICP/MS	**SW1311/6020 (SW3005A)**			Prep Date: **10/24/2013**		Analyst: **JG**
Lead	0.015	0.005		mg/L	5	10/24/2013

Lab ID: 13100756-014 **Collection Date** 10/23/2013 10:40:00 AM
Client Sample ID: B-134 (4'-6') **Matrix:** Soil

Analyses	Result	RL	Qualifier	Units	DF	Date Analyzed
TCLP Metals by ICP/MS	**SW1311/6020 (SW3005A)**			Prep Date: **10/24/2013**		Analyst: **JG**
Lead	0.46	0.005		mg/L	5	10/24/2013

Qualifiers:
ND - Not Detected at the Reporting Limit
J - Analyte detected below quantitation limits
B - Analyte detected in the associated Method Blank
HT - Sample received past holding time
* - Non-accredited parameter
RL - Reporting / Quantitation Limit for the analysis
S - Spike Recovery outside accepted recovery limits
R - RPD outside accepted recovery limits
E - Value above quantitation range
H - Holding time exceeded

STAT Analysis Corporation
2242 W. Harrison, Suite 200, Chicago, Illinois 60612 Phone: (312) 733-0551 Fax: (312) 733-2386
e-mail address: STATinfo@STATAnalysis.com AIHA, NVLAP and NELAP accredited

CHAIN OF CUSTODY RECORD

Nº: 846815 Page: 1 of 1

Company: Terracon
Project Number: A2137008 Client Tracking No.:
Project Name:
Project Location: 650 West 83rd Street
Sampler(s): CD
Report To: smdorien@terracon.com Phone:
Fax:
e-mail:
QC Level: 1 2 3 4

P.O. No.:
Quote No.: TOR 0000 5

Turn Around: 2-Day
Results Needed: / / am/pm

Client Sample Number/Description:	Date Taken	Time Taken	Matrix	Comp.	Grab	Preserv.	No. of Containers	TCLP Pb	Remarks	Lab No.:
B-108B (4'-6')	10/22/13	1030	S				1	X		001
B-109B (4'-6')		1035					1		Hold	002
B-110B (4'-6')		1010					1	X		003
B-111B (4'-6')		1015					1		Hold	004
B-112B (4'-6')		955					1	X		005
B-113B (4'-6')		1000					1		Hold	006
B-114B (4'-6')		930					1	X		007
B-115B (4'-6')		920					1		Hold	008
B-116B (1'-3')		845					1	X		009
B-117B (1'-3')		840					1		Hold	010
B-118B (1'-3')		850					1	X		011
B-120B (1'-3')		855					1	X		012
B-121B (1'-3')		900					1		Hold	013
B-134 (4'-6')	"	1040	"				1	X		014

Relinquished by: (Signature) Date/Time: 10/23/13 1200
Received by: (Signature) Date/Time: 10/23/13 2030
Relinquished by: (Signature) Date/Time:
Received by: (Signature) Date/Time:
Relinquished by: (Signature) Date/Time:
Received by: (Signature) Date/Time:

Comments:

Laboratory Work Order No.: 13007556

Received on Ice: Yes ☑ No ☐

Temperature: 5.8 °C

Preservation Code: A = None B = HNO_3 C = NaOH
D = H_2SO_4 E = HCl F = 5035/EnCore G = Other

STAT Analysis Corporation

Sample Receipt Checklist

Client Name TERRACON-CHICAGO | Date and Time Received: 10/23/2013 12:03:00 PM

Work Order Number 13100756 | Received by: DJ

Checklist completed by: _____ 10/23/13 (Signature / Date) | Reviewed by: _____ 10/23/13 (Initials / Date)

Matrix: | Carrier name | Client Delivered

Shipping container/cooler in good condition?	Yes ☑	No ☐	Not Present ☐
Custody seals intact on shippping container/cooler?	Yes ☐	No ☐	Not Present ☑
Custody seals intact on sample bottles?	Yes ☐	No ☐	Not Present ☑
Chain of custody present?	Yes ☑	No ☐	
Chain of custody signed when relinquished and received?	Yes ☑	No ☐	
Chain of custody agrees with sample labels/containers?	Yes ☑	No ☐	
Samples in proper container/bottle?	Yes ☑	No ☐	
Sample containers intact?	Yes ☑	No ☐	
Sufficient sample volume for indicated test?	Yes ☑	No ☐	
All samples received within holding time?	Yes ☑	No ☐	
Container or Temp Blank temperature in compliance?	Yes ☑	No ☐	Temperature 5.8 °C
Water - VOA vials have zero headspace?	No VOA vials submitted ☐	Yes ☐	No ☐
Water - Samples pH checked?	Yes ☐	No ☐	Checked by: _____
Water - Samples properly preserved?	Yes ☐	No ☐	pH Adjusted? _____

Any No response must be detailed in the comments section below.

Comments: _____

Client / Person contacted: _____ Date contacted: _____ Contacted by: _____

Response: _____

GRACE ANALYTICAL LAB, INC.
5300 McDermott Drive • Berkeley, IL 60163 • Tel. (708) 449-9449
Your logical choice for custom laboratory solutions
IL ELAP / NELAC Accreditation # 100292

October 04, 2013

Richard O'Brien
Terracon Consultants, Inc.
650 W. Lake St., Ste. 420
Chicago, IL 60661

Project ID: A2137008
Grace Analytical Job ID: 3092603

The above referenced project was analyzed as directed on the enclosed Chain of Custody record. Analyses were performed in accordance with requirements of 35 IAC 186(Accreditation #100246) and within holding time. Quality control criteria as outlined in the methods and current IL ELAP/NELAP have been met unless otherwise noted. QA/QC documentation and raw data will remain on file for future reference.

Request for duplications or reproductions of these analytical reports must be made in writing to GAL and signed by an authorized agent. The analytical results relate only to the samples analyzed.
GAL seeks you feedback, both positive and negative, on our performance. Please contact us for a copy of our feedback form or submit your comments to us at feedback@gracelabinc.com.

Should you have any questions regarding any of the enclosed analytical data or need additional information, please contact me at (708) 449-9449 or e-mail sk@gracelabinc.com.

Sincerely,

Steven Kim, Ph.D.
Laboratory Director
Grace Analytical Lab, Inc.

NELAP ACCREDITED LABORATORY

GRACE ANALYTICAL LAB, INC.

5300 McDermott Drive • Berkeley, IL 60163 • Tel. (708) 449-9449

Your logical choice for custom laboratory solutions

IL ELAP / NELAC Accreditation # 100292

Terracon Consultants, Inc.	Project Name: 650 W 83rd St Phase II	SN: 2013104 95033
650 W. Lake St., Ste. 420	Project Number: A2137008	Reported By: AM
Chicago IL, 60661	Project Manager: Richard O'Brien	10/04/13 09:50

ANALYTICAL REPORT FOR SAMPLES

Sample ID	Laboratory ID	Matrix	Date Sampled	Date Received
MW-34	3092603-01	Water	09/26/13 08:30	09/26/13 13:40
MW-5	3092603-02	Water	09/26/13 08:45	09/26/13 13:40
MW-122	3092603-03	Water	09/26/13 09:45	09/26/13 13:40

CASE NARATIVES

GRACE ANALYTICAL LAB, INC.

5300 McDermott Drive • Berkeley, IL 60163 • Tel. (708) 449-9449

Your logical choice for custom laboratory solutions

IL ELAP / NELAC Accreditation # 100292

Terracon Consultants, Inc.	Project Name: 650 W 83rd St Phase II	SN: 2013104 95033
650 W. Lake St., Ste. 420	Project Number: A2137008	Reported By: AM
Chicago IL, 60661	Project Manager: Richard O'Brien	10/04/13 09:50

Client Sample ID: MW-34

Lab Sample ID: 3092603-01 (Water)

Analyte	Result	Reporting Limit	Units	Dilution	Prepared	Analyzed	Method	Qualifiers
Grace Analytical Lab, Inc.								
Wet Chemistry								
pH	**6.85**		N/A	1	09/27/13	10/04/13	9045C	

GRACE ANALYTICAL LAB, INC.

5300 McDermott Drive • Berkeley, IL 60163 • Tel. (708) 449-9449

Your logical choice for custom laboratory solutions

IL ELAP / NELAC Accreditation # 100292

Terracon Consultants, Inc.	Project Name: 650 W 83rd St Phase II	SN: 2013104 95033
650 W. Lake St., Ste. 420	Project Number: A2137008	Reported By: AM
Chicago IL, 60661	Project Manager: Richard O'Brien	10/04/13 09:50

Client Sample ID: MW-5

Lab Sample ID: 3092603-02 (Water)

Analyte	Result	Reporting Limit	Units	Dilution	Prepared	Analyzed	Method	Qualifiers
Grace Analytical Lab, Inc.								
Wet Chemistry								
pH	**6.74**		N/A	1	09/27/13	10/04/13	9045C	

GRACE ANALYTICAL LAB, INC.

5300 McDermott Drive • Berkeley, IL 60163 • Tel. (708) 449-9449

Your logical choice for custom laboratory solutions

IL ELAP / NELAC Accreditation # 100292

Terracon Consultants, Inc.	Project Name: 650 W 83rd St Phase II	SN: 2013104 95033
650 W. Lake St., Ste. 420	Project Number: A2137008	Reported By: AM
Chicago IL, 60661	Project Manager: Richard O'Brien	10/04/13 09:50

Client Sample ID: MW-122

Lab Sample ID: 3092603-03 (Water)

Analyte	Result	Reporting Limit	Units	Dilution	Prepared	Analyzed	Method	Qualifiers
			Grace Analytical Lab, Inc.					
Wet Chemistry								
pH	**7.03**		N/A	1	09/27/13	10/04/13	9045C	
Chlorinated Pesticides and PCBs								
4,4'-DDD	ND	0.16	ug/L	1	09/30/13	10/01/13	EPA 8081B/8082A	
4,4'-DDE	ND	0.16	ug/L	1	09/30/13	10/01/13	EPA 8081B/8082A	
4,4'-DDT	ND	0.16	ug/L	1	09/30/13	10/01/13	EPA 8081B/8082A	
Aldrin	ND	0.08	ug/L	1	09/30/13	10/01/13	EPA 8081B/8082A	
alpha-BHC	ND	0.08	ug/L	1	09/30/13	10/01/13	EPA 8081B/8082A	
Aroclor-1016	ND	0.80	ug/L	1	09/30/13	10/01/13	EPA 8081B/8082A	
Aroclor-1221	ND	0.80	ug/L	1	09/30/13	10/01/13	EPA 8081B/8082A	
Aroclor-1232	ND	0.80	ug/L	1	09/30/13	10/01/13	EPA 8081B/8082A	
Aroclor-1242	ND	0.80	ug/L	1	09/30/13	10/01/13	EPA 8081B/8082A	
Aroclor-1248	ND	0.80	ug/L	1	09/30/13	10/01/13	EPA 8081B/8082A	
Aroclor-1254	ND	1.60	ug/L	1	09/30/13	10/01/13	EPA 8081B/8082A	
Aroclor-1260	ND	1.60	ug/L	1	09/30/13	10/01/13	EPA 8081B/8082A	
beta-BHC	ND	0.08	ug/L	1	09/30/13	10/01/13	EPA 8081B/8082A	
Chlordane	ND	0.08	ug/L	1	09/30/13	10/01/13	EPA 8081B/8082A	
delta-BHC	ND	0.08	ug/L	1	09/30/13	10/01/13	EPA 8081B/8082A	
Dieldrin	ND	0.16	ug/L	1	09/30/13	10/01/13	EPA 8081B/8082A	
Endosulfan I	ND	0.08	ug/L	1	09/30/13	10/01/13	EPA 8081B/8082A	
Endosulfan II	ND	0.16	ug/L	1	09/30/13	10/01/13	EPA 8081B/8082A	
Endosulfan sulfate	ND	0.16	ug/L	1	09/30/13	10/01/13	EPA 8081B/8082A	
Endrin	ND	0.16	ug/L	1	09/30/13	10/01/13	EPA 8081B/8082A	
Endrin aldehyde	ND	0.16	ug/L	1	09/30/13	10/01/13	EPA 8081B/8082A	
Endrin ketone	ND	0.16	ug/L	1	09/30/13	10/01/13	EPA 8081B/8082A	

GRACE ANALYTICAL LAB, INC.

5300 McDermott Drive • Berkeley, IL 60163 • Tel. (708) 449-9449

Your logical choice for custom laboratory solutions

IL ELAP / NELAC Accreditation # 100292

Terracon Consultants, Inc.	Project Name: 650 W 83rd St Phase II	SN: 2013104 95033
650 W. Lake St., Ste. 420	Project Number: A2137008	Reported By: AM
Chicago IL, 60661	Project Manager: Richard O'Brien	10/04/13 09:50

Client Sample ID: MW-122

Lab Sample ID: 3092603-03 (Water)

Analyte	Result	Reporting Limit	Units	Dilution	Prepared	Analyzed	Method	Qualifiers
			Grace Analytical Lab, Inc.					
Chlorinated Pesticides and PCBs								
gamma-BHC (Lindane)	ND	0.08	ug/L	1	09/30/13	10/01/13	EPA 8081B/8082A	
Heptachlor	ND	0.08	ug/L	1	09/30/13	10/01/13	EPA 8081B/8082A	
Heptachlor epoxide	ND	0.08	ug/L	1	09/30/13	10/01/13	EPA 8081B/8082A	
Methoxychlor	ND	0.80	ug/L	1	09/30/13	10/01/13	EPA 8081B/8082A	
Toxaphene	ND	0.16	ug/L	1	09/30/13	10/01/13	EPA 8081B/8082A	
Volatile Organic Compounds by EPA Method 8260B								
1,1,1-Trichloroethane	ND	5	ug/L	1	09/27/13	09/27/13	EPA 8260C	
1,1,2,2-Tetrachloroethane	ND	5	ug/L	1	09/27/13	09/27/13	EPA 8260C	
1,1,2-Trichloroethane	ND	5	ug/L	1	09/27/13	09/27/13	EPA 8260C	
1,1-Dichloroethane	ND	5	ug/L	1	09/27/13	09/27/13	EPA 8260C	
1,1-Dichloroethylene	ND	5	ug/L	1	09/27/13	09/27/13	EPA 8260C	
1,2-Dichloroethane	ND	5	ug/L	1	09/27/13	09/27/13	EPA 8260C	
1,2-Dichloropropane	ND	5	ug/L	1	09/27/13	09/27/13	EPA 8260C	
1,4-Dioxane	ND	5	ug/L	1	09/27/13	09/27/13	EPA 8260C	
2-Butanone	ND	5	ug/L	1	09/27/13	09/27/13	EPA 8260C	
2-Hexanone	ND	5	ug/L	1	09/27/13	09/27/13	EPA 8260C	
Acetone	ND	100	ug/L	1	09/27/13	09/27/13	EPA 8260C	
Benzene	ND	2	ug/L	1	09/27/13	09/27/13	EPA 8260C	
Bromodichloromethane	ND	2	ug/L	1	09/27/13	09/27/13	EPA 8260C	
Bromoform	ND	2	ug/L	1	09/27/13	09/27/13	EPA 8260C	
Bromomethane	ND	5	ug/L	1	09/27/13	09/27/13	EPA 8260C	
Carbon disulfide	ND	5	ug/L	1	09/27/13	09/27/13	EPA 8260C	
Carbon Tetrachloride	ND	5	ug/L	1	09/27/13	09/27/13	EPA 8260C	
Chlorobenzene	ND	5	ug/L	1	09/27/13	09/27/13	EPA 8260C	
Chloroethane	ND	5	ug/L	1	09/27/13	09/27/13	EPA 8260C	
Chloroform	ND	5	ug/L	1	09/27/13	09/27/13	EPA 8260C	
Chloromethane	ND	5	ug/L	1	09/27/13	09/27/13	EPA 8260C	
cis-1,2-Dichloroethylene	ND	5	ug/L	1	09/27/13	09/27/13	EPA 8260C	
cis-1,3-Dichloropropylene	ND	2	ug/L	1	09/27/13	09/27/13	EPA 8260C	
Dibromochloromethane	ND	5	ug/L	1	09/27/13	09/27/13	EPA 8260C	
Ethylbenzene	ND	5	ug/L	1	09/27/13	09/27/13	EPA 8260C	
Isopropylbenzene	ND	5	ug/L	1	09/27/13	09/27/13	EPA 8260C	
Methyl Isobutyl Ketone	ND	5	ug/L	1	09/27/13	09/27/13	EPA 8260C	
Methylene Chloride	ND	5	ug/L	1	09/27/13	09/27/13	EPA 8260C	
Methyl-tert-Butyl Ether	ND	5	ug/L	1	09/27/13	09/27/13	EPA 8260C	

GRACE ANALYTICAL LAB, INC.

5300 McDermott Drive • Berkeley, IL 60163 • Tel. (708) 449-9449

Your logical choice for custom laboratory solutions

IL ELAP / NELAC Accreditation # 100292

Terracon Consultants, Inc.	Project Name: 650 W 83rd St Phase II	SN: 2013104 95033
650 W. Lake St., Ste. 420	Project Number: A2137008	Reported By: AM
Chicago IL, 60661	Project Manager: Richard O'Brien	10/04/13 09:50

Client Sample ID: MW-122

Lab Sample ID: 3092603-03 (Water)

Analyte	Result	Reporting Limit	Units	Dilution	Prepared	Analyzed	Method	Qualifiers
			Grace Analytical Lab, Inc.					
Volatile Organic Compounds by EPA Method 8260B								
Styrene	ND	5	ug/L	1	09/27/13	09/27/13	EPA 8260C	
Tetrachloroethene	ND	2	ug/L	1	09/27/13	09/27/13	EPA 8260C	
Toluene	ND	5	ug/L	1	09/27/13	09/27/13	EPA 8260C	
trans-1,2-Dichloroethylene	ND	5	ug/L	1	09/27/13	09/27/13	EPA 8260C	
trans-1,3-Dichloropropylene	ND	2	ug/L	1	09/27/13	09/27/13	EPA 8260C	
Trichloroethene	ND	2	ug/L	1	09/27/13	09/27/13	EPA 8260C	
Trichlorofluoromethane	ND	5	ug/L	1	09/27/13	09/27/13	EPA 8260C	
Vinyl chloride	ND	2	ug/L	1	09/27/13	09/27/13	EPA 8260C	
Xylenes, total	**14**	5	ug/L	1	09/27/13	09/27/13	EPA 8260C	
Semivolatile Organic Compounds								
1,2,4-Trichlorobenzene	ND	12.0	ug/L	1	09/30/13	10/01/13	EPA 8270D	
1,2-Dichlorobenzene	ND	10.0	ug/L	1	09/30/13	10/01/13	EPA 8270D	
1,3-Dichlorobenzene	ND	10.0	ug/L	1	09/30/13	10/01/13	EPA 8270D	
1,3-Dinitrobenzene	ND	10.0	ug/L	1	09/30/13	10/01/13	EPA 8270D	
1,4-Dichlorobenzene	ND	10.0	ug/L	1	09/30/13	10/01/13	EPA 8270D	
2,4,5-Trichlorophenol	ND	10.0	ug/L	1	09/30/13	10/01/13	EPA 8270D	
2,4,6-Trichlorophenol	ND	10.0	ug/L	1	09/30/13	10/01/13	EPA 8270D	
2,4-Dichlorophenol	ND	10.0	ug/L	1	09/30/13	10/01/13	EPA 8270D	
2,4-Dimethylphenol	ND	10.0	ug/L	1	09/30/13	10/01/13	EPA 8270D	
2,4-Dinitrophenol	ND	10.0	ug/L	1	09/30/13	10/01/13	EPA 8270D	
2,4-Dinitrotoluene	ND	0.40	ug/L	1	09/30/13	10/01/13	EPA 8270D	
2,6-Dinitrotoluene	ND	0.70	ug/L	1	09/30/13	10/01/13	EPA 8270D	
2-Chloronaphthalene	ND	12.0	ug/L	1	09/30/13	10/01/13	EPA 8270D	
2-Chlorophenol	ND	10.0	ug/L	1	09/30/13	10/01/13	EPA 8270D	
2-Methylnaphthalene	ND	12.0	ug/L	1	09/30/13	10/01/13	EPA 8270D	
2-Methylphenol	ND	11.0	ug/L	1	09/30/13	10/01/13	EPA 8270D	
2-Nitroaniline	ND	50.0	ug/L	1	09/30/13	10/01/13	EPA 8270D	
2-Nitrophenol	ND	13.0	ug/L	1	09/30/13	10/01/13	EPA 8270D	
3,3'-Dichlorobenzidine	ND	20.0	ug/L	1	09/30/13	10/01/13	EPA 8270D	
3/4-Methylphenol	ND	10.0	ug/L	1	09/30/13	10/01/13	EPA 8270D	
3-Nitroaniline	ND	50.0	ug/L	1	09/30/13	10/01/13	EPA 8270D	
4,6-Dinitro-2-methylphenol	ND	50.0	ug/L	1	09/30/13	10/01/13	EPA 8270D	
4-Bromophenyl phenyl ether	ND	10.0	ug/L	1	09/30/13	10/01/13	EPA 8270D	
4-Chloro-3-methylphenol	ND	20.0	ug/L	1	09/30/13	10/01/13	EPA 8270D	
4-Chloroaniline	ND	20.0	ug/L	1	09/30/13	10/01/13	EPA 8270D	
4-Chlorophenyl phenyl ether	ND	10.0	ug/L	1	09/30/13	10/01/13	EPA 8270D	
4-Nitroaniline	ND	20.0	ug/L	1	09/30/13	10/01/13	EPA 8270D	
4-Nitrophenol	ND	50.0	ug/L	1	09/30/13	10/01/13	EPA 8270D	
Acenaphthene	ND	10.0	ug/L	1	09/30/13	10/01/13	EPA 8270D	

GRACE ANALYTICAL LAB, INC.

5300 McDermott Drive • Berkeley, IL 60163 • Tel. (708) 449-9449

Your logical choice for custom laboratory solutions

IL ELAP / NELAC Accreditation # 100292

Terracon Consultants, Inc.	Project Name: 650 W 83rd St Phase II	SN: 2013104 95033
650 W. Lake St., Ste. 420	Project Number: A2137008	Reported By: AM
Chicago IL, 60661	Project Manager: Richard O'Brien	10/04/13 09:50

Client Sample ID: MW-122

Lab Sample ID: 3092603-03 (Water)

Grace Analytical Lab, Inc.

Analyte	Result	Reporting Limit	Units	Dilution	Prepared	Analyzed	Method	Qualifiers
Semivolatile Organic Compounds								
Acenaphthylene	ND	10.0	ug/L	1	09/30/13	10/01/13	EPA 8270D	
Anthracene	ND	10.0	ug/L	1	09/30/13	10/01/13	EPA 8270D	
Benzo (a) anthracene	ND	2.00	ug/L	1	09/30/13	10/01/13	EPA 8270D	
Benzo (a) pyrene	ND	3.00	ug/L	1	09/30/13	10/01/13	EPA 8270D	
Benzo (b) fluoranthene	ND	2.00	ug/L	1	09/30/13	10/01/13	EPA 8270D	
Benzo (g,h,i) perylene	ND	10.0	ug/L	1	09/30/13	10/01/13	EPA 8270D	
Benzo (k) fluoranthene	ND	5.00	ug/L	1	09/30/13	10/01/13	EPA 8270D	
Benzoic acid	ND	50.0	ug/L	1	09/30/13	10/01/13	EPA 8270D	
Benzyl alcohol	ND	20.0	ug/L	1	09/30/13	10/01/13	EPA 8270D	
Bis(2-chloroethoxy)methane	ND	10.0	ug/L	1	09/30/13	10/01/13	EPA 8270D	
Bis(2-chloroethyl)ether	ND	10.0	ug/L	1	09/30/13	10/01/13	EPA 8270D	
Bis(2-chloroisopropyl)ether	ND	10.0	ug/L	1	09/30/13	10/01/13	EPA 8270D	
Bis(2-ethylhexyl)phthalate	ND	5.00	ug/L	1	09/30/13	10/01/13	EPA 8270D	
Butyl benzyl phthalate	ND	10.0	ug/L	1	09/30/13	10/01/13	EPA 8270D	
Carbazole	ND	10.0	ug/L	1	09/30/13	10/01/13	EPA 8270D	
Chrysene	ND	3.00	ug/L	1	09/30/13	10/01/13	EPA 8270D	
Dibenz (a,h) anthracene	ND	10.0	ug/L	1	09/30/13	10/01/13	EPA 8270D	
Dibenzofuran	ND	10.0	ug/L	1	09/30/13	10/01/13	EPA 8270D	
Diethyl phthalate	ND	10.0	ug/L	1	09/30/13	10/01/13	EPA 8270D	
Dimethyl phthalate	ND	50.0	ug/L	1	09/30/13	10/01/13	EPA 8270D	
Di-n-butyl phthalate	ND	11.0	ug/L	1	09/30/13	10/01/13	EPA 8270D	
Di-n-octyl phthalate	ND	10.0	ug/L	1	09/30/13	10/01/13	EPA 8270D	
Fluoranthene	ND	10.0	ug/L	1	09/30/13	10/01/13	EPA 8270D	
Fluorene	ND	10.0	ug/L	1	09/30/13	10/01/13	EPA 8270D	
Hexachlorobenzene	ND	3.00	ug/L	1	09/30/13	10/01/13	EPA 8270D	
Hexachlorobutadiene	ND	11.0	ug/L	1	09/30/13	10/01/13	EPA 8270D	
Hexachlorocyclopentadiene	ND	12.0	ug/L	1	09/30/13	10/01/13	EPA 8270D	
Hexachloroethane	ND	0.80	ug/L	1	09/30/13	10/01/13	EPA 8270D	
Indeno(1,2,3-cd)pyrene	ND	10.0	ug/L	1	09/30/13	10/01/13	EPA 8270D	
Isophorone	ND	10.0	ug/L	1	09/30/13	10/01/13	EPA 8270D	
Naphthalene	ND	12.0	ug/L	1	09/30/13	10/01/13	EPA 8270D	
Nitrobenzene	ND	12.0	ug/L	1	09/30/13	10/01/13	EPA 8270D	
N-Nitrosodi-n-propylamine	ND	0.70	ug/L	1	09/30/13	10/01/13	EPA 8270D	
N-Nitrosodiphenylamine	ND	4.00	ug/L	1	09/30/13	10/01/13	EPA 8270D	
Pentachlorophenol	ND	2.50	ug/L	1	09/30/13	10/01/13	EPA 8270D	
Phenanthrene	ND	10.0	ug/L	1	09/30/13	10/01/13	EPA 8270D	
Phenol	ND	10.0	ug/L	1	09/30/13	10/01/13	EPA 8270D	
Pyrene	ND	10.0	ug/L	1	09/30/13	10/01/13	EPA 8270D	

GRACE ANALYTICAL LAB, INC.

5300 McDermott Drive • Berkeley, IL 60163 • Tel. (708) 449-9449

Your logical choice for custom laboratory solutions

IL ELAP / NELAC Accreditation # 100292

Terracon Consultants, Inc.	Project Name: 650 W 83rd St Phase II	SN: 2013104 95033
650 W. Lake St., Ste. 420	Project Number: A2137008	Reported By: AM
Chicago IL, 60661	Project Manager: Richard O'Brien	10/04/13 09:50

Client Sample ID: MW-122

Lab Sample ID: 3092603-03 (Water)

First Environmental Laboratories Inc.

Analyte	Result	Reporting Limit	Units	Dilution	Prepared	Analyzed	Method	Qualifiers
Cyanide, Total								
Cyanide, Total	ND	0.005	mg/L	1		09/30/13	335.4R1.0	
Total Mercury								
Mercury	ND	0.0005	mg/L	1		09/30/13	7470A	
Total Metals								
Aluminum	**4.62**	0.05	mg/L	1	09/29/13	10/02/13	6010B	
Antimony	ND	0.006	mg/L	1	09/29/13	10/02/13	6010B	
Arsenic	**0.013**	0.002	mg/L	1	09/29/13	10/02/13	6010B	
Barium	**0.228**	0.001	mg/L	1	09/29/13	10/02/13	6010B	
Beryllium	ND	0.001	mg/L	1	09/29/13	10/02/13	6010B	
Cadmium	**0.004**	0.001	mg/L	1	09/29/13	10/02/13	6010B	
Calcium	**469**	0.1	mg/L	1	09/29/13	10/02/13	6010B	
Chromium	**0.044**	0.001	mg/L	1	09/29/13	10/02/13	6010B	
Cobalt	**0.036**	0.001	mg/L	1	09/29/13	10/02/13	6010B	
Copper	**0.037**	0.001	mg/L	1	09/29/13	10/02/13	6010B	
Iron	**15.6**	0.01	mg/L	1	09/29/13	10/02/13	6010B	
Lead	**0.082**	0.002	mg/L	1	09/29/13	10/02/13	6010B	
Magnesium	**112**	0.1	mg/L	1	09/29/13	10/02/13	6010B	
Manganese	**2.94**	0.001	mg/L	1	09/29/13	10/02/13	6010B	
Nickel	**0.032**	0.001	mg/L	1	09/29/13	10/02/13	6010B	
Potassium	**16.0**	0.1	mg/L	1	09/29/13	10/02/13	6010B	
Selenium	ND	0.002	mg/L	1	09/29/13	10/02/13	6010B	
Silver	ND	0.001	mg/L	1	09/29/13	10/02/13	6010B	
Sodium	**100**	0.1	mg/L	50	09/29/13	10/02/13	6010B	
Thallium	**0.010**	0.01	mg/L	1	09/29/13	10/02/13	6010B	
Vanadium	**0.02**	0.01	mg/L	1	09/29/13	10/02/13	6010B	
Zinc	**0.219**	0.005	mg/L	1	09/29/13	10/02/13	6010B	

GRACE ANALYTICAL LAB, INC.

5300 McDermott Drive • Berkeley, IL 60163 • Tel. (708) 449-9449

Your logical choice for custom laboratory solutions

IL ELAP / NELAC Accreditation # 100292

Terracon Consultants, Inc.	Project Name: 650 W 83rd St Phase II	SN: 2013104 95033
650 W. Lake St., Ste. 420	Project Number: A2137008	Reported By: AM
Chicago IL, 60661	Project Manager: Richard O'Brien	10/04/13 09:50

Notes and Definitions

DET	Analyte DETECTED
ND	Analyte NOT DETECTED at or above the reporting limit
NR	Not Reported
dry	Sample results reported on a dry weight basis
RPD	Relative Percent Difference

Grace Analytical lab, inc.
5300-B McDermott Dr. Berkeley, IL 60163 . Tel. (708) 449-9449 . . Fax (708) 449-3663

Grace Analytical Laboratory, Inc.
5300B McDermott Drive
Berkeley, Illinois 60163
Phone: (708) 449-9449 · Fax: (708) 449-3663
E-mail:gkim@gracelabinc.com
NELAC:100246, FDA: 3007291509

CHAIN OF CUSTODY RECORD

Page 1 of 1 pgs

Company Name: Terracon 3092603
Street Address: 650 W Lake St, Suite 420
City: Chicago State: IL Zip: 60661
Phone: 312-515-0014 Fax: 312-575-0111 e-mail: rmobrien@terracon.com
Send Report To: Richard O'Brien Via Fax
Sampled By: Matt Toth

Project: A2137008
Project Name: 650 W 83rd St Phase II
PO#:
Matrix Codes: S=Soil W=Water O=Other

Analysis

Date/Time Taken	Sample Description	Matrix	PH	VOCs	SVOCs	Pesticides/PCBs	TAL Inorganics			STD TAT Comments	Lab ID
9/26/13/ 8:30	MW-34	W	X								3092603-01
9/26/13/ 8:45	MW-5	W	X								-02
9/26/13/ 9:45	MW-122	W	X	X	X	X	X				-03

FOR LAB USE ONLY
Cooler Temperature, 0-6°C Yes ✓ No 5.1 °C
5.1
Sample Refrigerated: Yes No
Containers Received Preserved Yes No ☐ NA
Received within 6 hrs of collection
Refrigerator Temperature °C
Ice Present Yes ✓ No
5035 Vials Frozen: Yes No
Freezer Temperature °C

Notes and Special Instructions No trip Blank

Relinquished By: Matt Toth Date/Time Received By: Adwa Mein Date/Time 9/26/13 13:40
Relinquished By: [signature] AM 9/26/13 Date/Time 9/26/13 13:40 Received By: Date/Time

Grace Analytical lab, inc.

5300-B McDermott Dr. Berkeley, IL 60163 . Tel. (708) 449-9449 . . Fax (708) 449-3663

SAMPLE/COOLER RECEIPT FORM GAL JOB ID#: 3092603
Client Name: Terracon Consultants, Inc. Cooler Received/Opened: 09/26/2013 at 13:40
Project ID: A2137008

Signed by: _____
Log-In Personnel Signature

		Yes	No	NA
1.	Temperature of Cooler when triaged: 5.1°C			
2.	Were custody seals on outside of cooler?...	☐	☐	☒
3.	Were custody seals on containers intact?	☐	☐	☒
	If YES: Were the seals intact, signed, and dated correctly?	☐	☐	☐
4.	Were Chain of Custody form inside cooler?	☒	☐	☐
5.	Were Chain of Custody form properly filled out (ink, signed, etc)?.	☒	☐	☐
6.	Did you sign the Chain of Custody form in the appropriate place?	☒	☐	☐
7.	Was there packing material used	☐	☒	☐
	If YES: ☐Bubblewrap ☐Peanuts ☐Vermiculite ☐Other ☐ None			
8.	Cooling process: ☒Ice ☐Icepack ☐Ice(direct contact) ☐Dry ice ☐other ☐None			
9.	Did all containers arrive in good condition (unbroken)?	☒	☐	☐
10.	Were all container labels complete (ID #, data, signed, preserv., etc	☒	☐	☐
11.	Did all container labels and tags agree with Chain of Custody form	☒	☐	☐
12.	Were correct containers used for the analysis requested	☒	☐	☐
13.	a. Were Water VOA vials received	☒	☐	☐
	b. Was there any observable head space present in any VOA vial	☐	☒	☐
14.	Was sufficient amount of sample sent in each container	☒	☐	☐
15.	Were correct preservatives used	☒	☐	☐
	If not, record _____			
16.	Was residual chlorine present	☐	☐	☒

17. Indicate the Airbill Tracking Number and Name of Courier below:
☐Fed-Ex ☐UPS ☐Velocity ☐Airborne ☐Route ☐Misc. ☒Hand delivered ☐Picked Up

18. If a Non-Conformance exists, record reason: _____

GRACE ANALYTICAL LAB, INC.
5300 McDermott Drive • Berkeley, IL 60163 • Tel. (708) 449-9449
Your logical choice for custom laboratory solutions
IL ELAP / NELAC Accreditation # 100292

July 22, 2013

Richard O'Brien
Terracon Consultants, Inc.
650 W. Lake St., Ste. 420
Chicago, IL 60661

Project ID: 650 W. 83 / A2137008
Grace Analytical Job ID: 3062803

The above referenced project was analyzed as directed on the enclosed Chain of Custody record. Analyses were performed in accordance with requirements of 35 IAC 186(Accreditation #100246) and within holding time. Quality control criteria as outlined in the methods and current IL ELAP/NELAP have been met unless otherwise noted. QA/QC documentation and raw data will remain on file for future reference.

Request for duplications or reproductions of these analytical reports must be made in writing to GAL and signed by an authorized agent. The analytical results relate only to the samples analyzed.
GAL seeks you feedback, both positive and negative, on our performance. Please contact us for a copy of our feedback form or submit your comments to us at feedback@gracelabinc.com.

Should you have any questions regarding any of the enclosed analytical data or need additional information, please contact me at (708) 449-9449 or e-mail sk@gracelabinc.com.

Sincerely,

Steven Kim, Ph.D.
Laboratory Director
Grace Analytical Lab, Inc.

NELAP ACCREDITED LABORATORY

GRACE ANALYTICAL LAB, INC.

5300 McDermott Drive • Berkeley, IL 60163 • Tel. (708) 449-9449

Your logical choice for custom laboratory solutions

IL ELAP / NELAC Accreditation # 100292

Terracon Consultants, Inc.	Project Name: Chicago DOE	SN: 2013722165116
650 W. Lake St., Ste. 420	Project Number: 650 W. 83 / A2137008	Reported By: AM
Chicago IL, 60661	Project Manager: Richard O'Brien	07/22/13 16:50

ANALYTICAL REPORT FOR SAMPLES

Sample ID	Laboratory ID	Matrix	Date Sampled	Date Received
MW-10	3062803-01	Water	06/28/13 13:10	06/28/13 15:00
MW-34	3062803-02	Water	06/28/13 12:40	06/28/13 15:00
MW-5	3062803-03	Water	06/28/13 13:30	06/28/13 15:00
Trip Blank	3062803-04	Water	06/28/13 13:10	06/28/13 15:00
MW-5	3062803-05	Water	07/19/13 10:00	06/28/13 15:00
MW-10	3062803-06	Water	07/19/13 10:00	06/28/13 15:00
MW-34	3062803-07	Water	07/19/13 10:00	06/28/13 15:00

CASE NARATIVES

GRACE ANALYTICAL LAB, INC.
5300 McDermott Drive • Berkeley, IL 60163 • Tel. (708) 449-9449
Your logical choice for custom laboratory solutions
IL ELAP / NELAC Accreditation # 100292

Terracon Consultants, Inc.	Project Name: Chicago DOE	SN: 2013722165116
650 W. Lake St., Ste. 420	Project Number: 650 W. 83 / A2137008	Reported By: AM
Chicago IL, 60661	Project Manager: Richard O'Brien	07/22/13 16:50

Client Sample ID: MW-10

Lab Sample ID: 3062803-01 (Water)

Grace Analytical Lab, Inc.

Volatile Organic Compounds by EPA Method 8260B

Analyte	Result	Reporting Limit	Units	Dilution	Prepared	Analyzed	Method	Qualifiers
1,1,1-Trichloroethane	ND	5	ug/L	1	07/02/13	07/02/13	EPA 8260C	
1,1,2,2-Tetrachloroethane	ND	5	ug/L	1	07/02/13	07/02/13	EPA 8260C	
1,1,2-Trichloroethane	ND	5	ug/L	1	07/02/13	07/02/13	EPA 8260C	
1,1-Dichloroethane	ND	5	ug/L	1	07/02/13	07/02/13	EPA 8260C	
1,1-Dichloroethylene	ND	5	ug/L	1	07/02/13	07/02/13	EPA 8260C	
1,2-Dichloroethane	ND	5	ug/L	1	07/02/13	07/02/13	EPA 8260C	
1,2-Dichloropropane	ND	5	ug/L	1	07/02/13	07/02/13	EPA 8260C	
1,4-Dioxane	ND	5	ug/L	1	07/02/13	07/02/13	EPA 8260C	
2-Butanone	ND	5	ug/L	1	07/02/13	07/02/13	EPA 8260C	
2-Hexanone	ND	5	ug/L	1	07/02/13	07/02/13	EPA 8260C	
Acetone	ND	100	ug/L	1	07/02/13	07/02/13	EPA 8260C	
Benzene	ND	2	ug/L	1	07/02/13	07/02/13	EPA 8260C	
Bromodichloromethane	ND	2	ug/L	1	07/02/13	07/02/13	EPA 8260C	
Bromoform	ND	2	ug/L	1	07/02/13	07/02/13	EPA 8260C	
Bromomethane	ND	5	ug/L	1	07/02/13	07/02/13	EPA 8260C	
Carbon disulfide	ND	5	ug/L	1	07/02/13	07/02/13	EPA 8260C	
Carbon Tetrachloride	ND	5	ug/L	1	07/02/13	07/02/13	EPA 8260C	
Chlorobenzene	ND	5	ug/L	1	07/02/13	07/02/13	EPA 8260C	
Chloroethane	ND	5	ug/L	1	07/02/13	07/02/13	EPA 8260C	
Chloroform	ND	5	ug/L	1	07/02/13	07/02/13	EPA 8260C	
Chloromethane	ND	5	ug/L	1	07/02/13	07/02/13	EPA 8260C	
cis-1,2-Dichloroethylene	ND	5	ug/L	1	07/02/13	07/02/13	EPA 8260C	
cis-1,3-Dichloropropylene	ND	2	ug/L	1	07/02/13	07/02/13	EPA 8260C	
Dibromochloromethane	ND	5	ug/L	1	07/02/13	07/02/13	EPA 8260C	
Ethylbenzene	ND	5	ug/L	1	07/02/13	07/02/13	EPA 8260C	
Isopropylbenzene	ND	5	ug/L	1	07/02/13	07/02/13	EPA 8260C	
Methyl Isobutyl Ketone	ND	5	ug/L	1	07/02/13	07/02/13	EPA 8260C	
Methylene Chloride	ND	5	ug/L	1	07/02/13	07/02/13	EPA 8260C	
Methyl-tert-Butyl Ether	ND	5	ug/L	1	07/02/13	07/02/13	EPA 8260C	
Styrene	ND	5	ug/L	1	07/02/13	07/02/13	EPA 8260C	
Tetrachloroethene	ND	2	ug/L	1	07/02/13	07/02/13	EPA 8260C	
Toluene	ND	5	ug/L	1	07/02/13	07/02/13	EPA 8260C	
trans-1,2-Dichloroethylene	ND	5	ug/L	1	07/02/13	07/02/13	EPA 8260C	
trans-1,3-Dichloropropylene	ND	2	ug/L	1	07/02/13	07/02/13	EPA 8260C	
Trichloroethene	ND	2	ug/L	1	07/02/13	07/02/13	EPA 8260C	
Trichlorofluoromethane	ND	5	ug/L	1	07/02/13	07/02/13	EPA 8260C	
Vinyl chloride	ND	2	ug/L	1	07/02/13	07/02/13	EPA 8260C	
Xylenes, total	ND	5	ug/L	1	07/02/13	07/02/13	EPA 8260C	

GRACE ANALYTICAL LAB, INC.

5300 McDermott Drive • Berkeley, IL 60163 • Tel. (708) 449-9449

Your logical choice for custom laboratory solutions

IL ELAP / NELAC Accreditation # 100292

Terracon Consultants, Inc.	Project Name: Chicago DOE	SN: 2013722165116
650 W. Lake St., Ste. 420	Project Number: 650 W. 83 / A2137008	Reported By: AM
Chicago IL, 60661	Project Manager: Richard O'Brien	07/22/13 16:50

Client Sample ID: MW-10

Lab Sample ID: 3062803-01 (Water)

Analyte	Result	Reporting Limit	Units	Dilution	Prepared	Analyzed	Method	Qualifiers
First Environmental Laboratories Inc.								
Total Mercury								
Mercury	ND	0.0005	mg/L	1		07/09/13	7470A	
Total Metals								
Arsenic	**0.029**	0.004	mg/L	1	07/08/13	07/10/13	6020A	
Barium	**0.107**	0.004	mg/L	1	07/08/13	07/10/13	6020A	
Cadmium	ND	0.002	mg/L	1	07/08/13	07/10/13	6020A	
Chromium	**0.015**	0.003	mg/L	1	07/08/13	07/10/13	6020A	
Lead	**0.063**	0.004	mg/L	1	07/08/13	07/10/13	6020A	
Selenium	ND	0.004	mg/L	1	07/08/13	07/10/13	6020A	
Silver	ND	0.002	mg/L	1	07/08/13	07/10/13	6020A	

GRACE ANALYTICAL LAB, INC.

5300 McDermott Drive • Berkeley, IL 60163 • Tel. (708) 449-9449

Your logical choice for custom laboratory solutions

IL ELAP / NELAC Accreditation # 100292

Terracon Consultants, Inc.	Project Name: Chicago DOE	SN: 2013722165116
650 W. Lake St., Ste. 420	Project Number: 650 W. 83 / A2137008	Reported By: AM
Chicago IL, 60661	Project Manager: Richard O'Brien	07/22/13 16:50

Client Sample ID: MW-34

Lab Sample ID: 3062803-02 (Water)

Grace Analytical Lab, Inc.

Volatile Organic Compounds by EPA Method 8260B

Analyte	Result	Reporting Limit	Units	Dilution	Prepared	Analyzed	Method	Qualifiers
1,1,1-Trichloroethane	ND	5	ug/L	1	07/02/13	07/02/13	EPA 8260C	
1,1,2,2-Tetrachloroethane	ND	5	ug/L	1	07/02/13	07/02/13	EPA 8260C	
1,1,2-Trichloroethane	ND	5	ug/L	1	07/02/13	07/02/13	EPA 8260C	
1,1-Dichloroethane	ND	5	ug/L	1	07/02/13	07/02/13	EPA 8260C	
1,1-Dichloroethylene	ND	5	ug/L	1	07/02/13	07/02/13	EPA 8260C	
1,2-Dichloroethane	ND	5	ug/L	1	07/02/13	07/02/13	EPA 8260C	
1,2-Dichloropropane	ND	5	ug/L	1	07/02/13	07/02/13	EPA 8260C	
1,4-Dioxane	ND	5	ug/L	1	07/02/13	07/02/13	EPA 8260C	
2-Butanone	ND	5	ug/L	1	07/02/13	07/02/13	EPA 8260C	
2-Hexanone	ND	5	ug/L	1	07/02/13	07/02/13	EPA 8260C	
Acetone	ND	100	ug/L	1	07/02/13	07/02/13	EPA 8260C	
Benzene	ND	2	ug/L	1	07/02/13	07/02/13	EPA 8260C	
Bromodichloromethane	ND	2	ug/L	1	07/02/13	07/02/13	EPA 8260C	
Bromoform	ND	2	ug/L	1	07/02/13	07/02/13	EPA 8260C	
Bromomethane	ND	5	ug/L	1	07/02/13	07/02/13	EPA 8260C	
Carbon disulfide	ND	5	ug/L	1	07/02/13	07/02/13	EPA 8260C	
Carbon Tetrachloride	ND	5	ug/L	1	07/02/13	07/02/13	EPA 8260C	
Chlorobenzene	ND	5	ug/L	1	07/02/13	07/02/13	EPA 8260C	
Chloroethane	ND	5	ug/L	1	07/02/13	07/02/13	EPA 8260C	
Chloroform	ND	5	ug/L	1	07/02/13	07/02/13	EPA 8260C	
Chloromethane	ND	5	ug/L	1	07/02/13	07/02/13	EPA 8260C	
cis-1,2-Dichloroethylene	ND	5	ug/L	1	07/02/13	07/02/13	EPA 8260C	
cis-1,3-Dichloropropylene	ND	2	ug/L	1	07/02/13	07/02/13	EPA 8260C	
Dibromochloromethane	ND	5	ug/L	1	07/02/13	07/02/13	EPA 8260C	
Ethylbenzene	ND	5	ug/L	1	07/02/13	07/02/13	EPA 8260C	
Isopropylbenzene	ND	5	ug/L	1	07/02/13	07/02/13	EPA 8260C	
Methyl Isobutyl Ketone	ND	5	ug/L	1	07/02/13	07/02/13	EPA 8260C	
Methylene Chloride	ND	5	ug/L	1	07/02/13	07/02/13	EPA 8260C	
Methyl-tert-Butyl Ether	ND	5	ug/L	1	07/02/13	07/02/13	EPA 8260C	
Styrene	ND	5	ug/L	1	07/02/13	07/02/13	EPA 8260C	
Tetrachloroethene	ND	2	ug/L	1	07/02/13	07/02/13	EPA 8260C	
Toluene	ND	5	ug/L	1	07/02/13	07/02/13	EPA 8260C	
trans-1,2-Dichloroethylene	ND	5	ug/L	1	07/02/13	07/02/13	EPA 8260C	
trans-1,3-Dichloropropylene	ND	2	ug/L	1	07/02/13	07/02/13	EPA 8260C	
Trichloroethene	ND	2	ug/L	1	07/02/13	07/02/13	EPA 8260C	
Trichlorofluoromethane	ND	5	ug/L	1	07/02/13	07/02/13	EPA 8260C	
Vinyl chloride	ND	2	ug/L	1	07/02/13	07/02/13	EPA 8260C	
Xylenes, total	ND	5	ug/L	1	07/02/13	07/02/13	EPA 8260C	

GRACE ANALYTICAL LAB, INC.

5300 McDermott Drive • Berkeley, IL 60163 • Tel. (708) 449-9449

Your logical choice for custom laboratory solutions

IL ELAP / NELAC Accreditation # 100292

Terracon Consultants, Inc.	Project Name: Chicago DOE	SN: 2013722165116
650 W. Lake St., Ste. 420	Project Number: 650 W. 83 / A2137008	Reported By: AM
Chicago IL, 60661	Project Manager: Richard O'Brien	07/22/13 16:50

Client Sample ID: MW-34

Lab Sample ID: 3062803-02 (Water)

Analyte	Result	Reporting Limit	Units	Dilution	Prepared	Analyzed	Method	Qualifiers
			First Environmental Laboratories Inc.					
Total Mercury								
Mercury	ND	0.0005	mg/L	1		07/09/13	7470A	
Total Metals								
Arsenic	**0.007**	0.004	mg/L	1	07/08/13	07/10/13	6020A	
Barium	**0.143**	0.004	mg/L	1	07/08/13	07/10/13	6020A	
Cadmium	ND	0.002	mg/L	1	07/08/13	07/10/13	6020A	
Chromium	**0.010**	0.003	mg/L	1	07/08/13	07/10/13	6020A	
Lead	**0.026**	0.004	mg/L	1	07/08/13	07/10/13	6020A	
Selenium	ND	0.004	mg/L	1	07/08/13	07/10/13	6020A	
Silver	ND	0.002	mg/L	1	07/08/13	07/10/13	6020A	

GRACE ANALYTICAL LAB, INC.

5300 McDermott Drive • Berkeley, IL 60163 • Tel. (708) 449-9449

Your logical choice for custom laboratory solutions

IL ELAP / NELAC Accreditation # 100292

Terracon Consultants, Inc.	Project Name: Chicago DOE	SN: 2013722165116
650 W. Lake St., Ste. 420	Project Number: 650 W. 83 / A2137008	Reported By: AM
Chicago IL, 60661	Project Manager: Richard O'Brien	07/22/13 16:50

Client Sample ID: MW-5

Lab Sample ID: 3062803-03 (Water)

Grace Analytical Lab, Inc.

Volatile Organic Compounds by EPA Method 8260B

Analyte	Result	Reporting Limit	Units	Dilution	Prepared	Analyzed	Method	Qualifiers
1,1,1-Trichloroethane	ND	5	ug/L	1	07/02/13	07/02/13	EPA 8260C	
1,1,2,2-Tetrachloroethane	ND	5	ug/L	1	07/02/13	07/02/13	EPA 8260C	
1,1,2-Trichloroethane	ND	5	ug/L	1	07/02/13	07/02/13	EPA 8260C	
1,1-Dichloroethane	ND	5	ug/L	1	07/02/13	07/02/13	EPA 8260C	
1,1-Dichloroethylene	ND	5	ug/L	1	07/02/13	07/02/13	EPA 8260C	
1,2-Dichloroethane	ND	5	ug/L	1	07/02/13	07/02/13	EPA 8260C	
1,2-Dichloropropane	ND	5	ug/L	1	07/02/13	07/02/13	EPA 8260C	
1,4-Dioxane	ND	5	ug/L	1	07/02/13	07/02/13	EPA 8260C	
2-Butanone	ND	5	ug/L	1	07/02/13	07/02/13	EPA 8260C	
2-Hexanone	ND	5	ug/L	1	07/02/13	07/02/13	EPA 8260C	
Acetone	ND	100	ug/L	1	07/02/13	07/02/13	EPA 8260C	
Benzene	ND	2	ug/L	1	07/02/13	07/02/13	EPA 8260C	
Bromodichloromethane	ND	2	ug/L	1	07/02/13	07/02/13	EPA 8260C	
Bromoform	ND	2	ug/L	1	07/02/13	07/02/13	EPA 8260C	
Bromomethane	ND	5	ug/L	1	07/02/13	07/02/13	EPA 8260C	
Carbon disulfide	ND	5	ug/L	1	07/02/13	07/02/13	EPA 8260C	
Carbon Tetrachloride	ND	5	ug/L	1	07/02/13	07/02/13	EPA 8260C	
Chlorobenzene	ND	5	ug/L	1	07/02/13	07/02/13	EPA 8260C	
Chloroethane	ND	5	ug/L	1	07/02/13	07/02/13	EPA 8260C	
Chloroform	ND	5	ug/L	1	07/02/13	07/02/13	EPA 8260C	
Chloromethane	ND	5	ug/L	1	07/02/13	07/02/13	EPA 8260C	
cis-1,2-Dichloroethylene	ND	5	ug/L	1	07/02/13	07/02/13	EPA 8260C	
cis-1,3-Dichloropropylene	ND	2	ug/L	1	07/02/13	07/02/13	EPA 8260C	
Dibromochloromethane	ND	5	ug/L	1	07/02/13	07/02/13	EPA 8260C	
Ethylbenzene	ND	5	ug/L	1	07/02/13	07/02/13	EPA 8260C	
Isopropylbenzene	ND	5	ug/L	1	07/02/13	07/02/13	EPA 8260C	
Methyl Isobutyl Ketone	ND	5	ug/L	1	07/02/13	07/02/13	EPA 8260C	
Methylene Chloride	ND	5	ug/L	1	07/02/13	07/02/13	EPA 8260C	
Methyl-tert-Butyl Ether	ND	5	ug/L	1	07/02/13	07/02/13	EPA 8260C	
Styrene	ND	5	ug/L	1	07/02/13	07/02/13	EPA 8260C	
Tetrachloroethene	ND	2	ug/L	1	07/02/13	07/02/13	EPA 8260C	
Toluene	ND	5	ug/L	1	07/02/13	07/02/13	EPA 8260C	
trans-1,2-Dichloroethylene	ND	5	ug/L	1	07/02/13	07/02/13	EPA 8260C	
trans-1,3-Dichloropropylene	ND	2	ug/L	1	07/02/13	07/02/13	EPA 8260C	
Trichloroethene	ND	2	ug/L	1	07/02/13	07/02/13	EPA 8260C	
Trichlorofluoromethane	ND	5	ug/L	1	07/02/13	07/02/13	EPA 8260C	
Vinyl chloride	ND	2	ug/L	1	07/02/13	07/02/13	EPA 8260C	
Xylenes, total	ND	5	ug/L	1	07/02/13	07/02/13	EPA 8260C	

GRACE ANALYTICAL LAB, INC.

5300 McDermott Drive • Berkeley, IL 60163 • Tel. (708) 449-9449

Your logical choice for custom laboratory solutions

IL ELAP / NELAC Accreditation # 100292

Terracon Consultants, Inc.	Project Name: Chicago DOE	SN: 2013722165116
650 W. Lake St., Ste. 420	Project Number: 650 W. 83 / A2137008	Reported By: AM
Chicago IL, 60661	Project Manager: Richard O'Brien	07/22/13 16:50

Client Sample ID: MW-5

Lab Sample ID: 3062803-03 (Water)

Analyte	Result	Reporting Limit	Units	Dilution	Prepared	Analyzed	Method	Qualifiers
First Environmental Laboratories Inc.								
Cyanide, Total								
Cyanide, Total	ND	0.005	mg/L	1		07/16/13	4500CN,C,E	
Total Mercury								
Mercury	ND	0.0005	mg/L	1		07/09/13	7470A	
Total Metals								
Aluminum	**4.65**	0.25	mg/L	1	07/16/13	07/15/13	6010B	
Antimony	ND	0.006	mg/L	1	07/16/13	07/15/13	6010B	
Arsenic	ND	0.012	mg/L	1	07/16/13	07/15/13	6010B	
Barium	**0.117**	0.012	mg/L	1	07/16/13	07/15/13	6010B	
Beryllium	ND	0.006	mg/L	1	07/16/13	07/15/13	6010B	
Cadmium	ND	0.002	mg/L	1	07/16/13	07/15/13	6010B	
Calcium	**223**	1.25	mg/L	1	07/16/13	07/15/13	6010B	
Chromium	ND	0.008	mg/L	1	07/16/13	07/15/13	6010B	
Cobalt	ND	0.012	mg/L	1	07/16/13	07/15/13	6010B	
Copper	**0.010**	0.006	mg/L	1	07/16/13	07/15/13	6010B	
Iron	**16.8**	1	mg/L	1	07/16/13	07/15/13	6010B	
Lead	**0.012**	0.004	mg/L	1	07/16/13	07/15/13	6010B	
Magnesium	**75.4**	1.25	mg/L	1	07/16/13	07/15/13	6010B	
Manganese	**1.42**	0.008	mg/L	1	07/16/13	07/15/13	6010B	
Nickel	**0.011**	0.006	mg/L	1	07/16/13	07/15/13	6010B	
Potassium	**11.3**	1.25	mg/L	1	07/16/13	07/15/13	6010B	
Selenium	ND	0.002	mg/L	1	07/16/13	07/15/13	6010B	
Silver	ND	0.004	mg/L	1	07/16/13	07/15/13	6010B	
Sodium	**96.2**	1.25	mg/L	1	07/16/13	07/15/13	6010B	
Thallium	ND	0.01	mg/L	1	07/16/13	07/15/13	6010B	
Vanadium	ND	0.012	mg/L	1	07/16/13	07/15/13	6010B	
Zinc	ND	0.004	mg/L	1	07/16/13	07/15/13	6010B	
PDC Laboratories, Inc.								
515.3								
2,4-D	ND	1.0	ug/L	1	07/08/13	07/11/13	M515.3	
Dalapon	ND	5.0	ug/L	1	07/08/13	07/11/13	M515.3	
DBOB	**1.0**		ug/L	1	07/08/13	07/11/13	M515.3	
DCAA	**15**		ug/L	1	07/08/13	07/11/13	M515.3	
Dicamba	ND	0.30	ug/L	1	07/08/13	07/11/13	M515.3	
Dinoseb	ND	1.0	ug/L	1	07/08/13	07/11/13	M515.3	
MCPP	ND	50	ug/L	1	07/08/13	07/11/13	M515.3	
Pentachlorophenol	ND	0.40	ug/L	1	07/08/13	07/11/13	M515.3	
Picloram	ND	1.0	ug/L	1	07/08/13	07/11/13	M515.3	
Silvex	ND	1.0	ug/L	1	07/08/13	07/11/13	M515.3	

GRACE ANALYTICAL LAB, INC.

5300 McDermott Drive • Berkeley, IL 60163 • Tel. (708) 449-9449

Your logical choice for custom laboratory solutions

IL ELAP / NELAC Accreditation # 100292

Terracon Consultants, Inc.	Project Name: Chicago DOE	SN: 2013722165116
650 W. Lake St., Ste. 420	Project Number: 650 W. 83 / A2137008	Reported By: AM
Chicago IL, 60661	Project Manager: Richard O'Brien	07/22/13 16:50

Client Sample ID: Trip Blank

Lab Sample ID: 3062803-04 (Water)

Grace Analytical Lab, Inc.

Volatile Organic Compounds by EPA Method 8260B

Analyte	Result	Reporting Limit	Units	Dilution	Prepared	Analyzed	Method	Qualifiers
1,1,1-Trichloroethane	ND	5	ug/L	1	07/02/13	07/02/13	EPA 8260C	
1,1,2,2-Tetrachloroethane	ND	5	ug/L	1	07/02/13	07/02/13	EPA 8260C	
1,1,2-Trichloroethane	ND	5	ug/L	1	07/02/13	07/02/13	EPA 8260C	
1,1-Dichloroethane	ND	5	ug/L	1	07/02/13	07/02/13	EPA 8260C	
1,1-Dichloroethylene	ND	5	ug/L	1	07/02/13	07/02/13	EPA 8260C	
1,2-Dichloroethane	ND	5	ug/L	1	07/02/13	07/02/13	EPA 8260C	
1,2-Dichloropropane	ND	5	ug/L	1	07/02/13	07/02/13	EPA 8260C	
1,4-Dioxane	ND	5	ug/L	1	07/02/13	07/02/13	EPA 8260C	
2-Butanone	ND	5	ug/L	1	07/02/13	07/02/13	EPA 8260C	
2-Hexanone	ND	5	ug/L	1	07/02/13	07/02/13	EPA 8260C	
Acetone	ND	100	ug/L	1	07/02/13	07/02/13	EPA 8260C	
Benzene	ND	2	ug/L	1	07/02/13	07/02/13	EPA 8260C	
Bromodichloromethane	ND	2	ug/L	1	07/02/13	07/02/13	EPA 8260C	
Bromoform	ND	2	ug/L	1	07/02/13	07/02/13	EPA 8260C	
Bromomethane	ND	5	ug/L	1	07/02/13	07/02/13	EPA 8260C	
Carbon disulfide	ND	5	ug/L	1	07/02/13	07/02/13	EPA 8260C	
Carbon Tetrachloride	ND	5	ug/L	1	07/02/13	07/02/13	EPA 8260C	
Chlorobenzene	ND	5	ug/L	1	07/02/13	07/02/13	EPA 8260C	
Chloroethane	ND	5	ug/L	1	07/02/13	07/02/13	EPA 8260C	
Chloroform	ND	5	ug/L	1	07/02/13	07/02/13	EPA 8260C	
Chloromethane	ND	5	ug/L	1	07/02/13	07/02/13	EPA 8260C	
cis-1,2-Dichloroethylene	ND	5	ug/L	1	07/02/13	07/02/13	EPA 8260C	
cis-1,3-Dichloropropylene	ND	2	ug/L	1	07/02/13	07/02/13	EPA 8260C	
Dibromochloromethane	ND	5	ug/L	1	07/02/13	07/02/13	EPA 8260C	
Ethylbenzene	ND	5	ug/L	1	07/02/13	07/02/13	EPA 8260C	
Isopropylbenzene	ND	5	ug/L	1	07/02/13	07/02/13	EPA 8260C	
Methyl Isobutyl Ketone	ND	5	ug/L	1	07/02/13	07/02/13	EPA 8260C	
Methylene Chloride	ND	5	ug/L	1	07/02/13	07/02/13	EPA 8260C	
Methyl-tert-Butyl Ether	ND	5	ug/L	1	07/02/13	07/02/13	EPA 8260C	
Styrene	ND	5	ug/L	1	07/02/13	07/02/13	EPA 8260C	
Tetrachloroethene	ND	2	ug/L	1	07/02/13	07/02/13	EPA 8260C	
Toluene	ND	5	ug/L	1	07/02/13	07/02/13	EPA 8260C	
trans-1,2-Dichloroethylene	ND	5	ug/L	1	07/02/13	07/02/13	EPA 8260C	
trans-1,3-Dichloropropylene	ND	2	ug/L	1	07/02/13	07/02/13	EPA 8260C	
Trichloroethene	ND	2	ug/L	1	07/02/13	07/02/13	EPA 8260C	
Trichlorofluoromethane	ND	5	ug/L	1	07/02/13	07/02/13	EPA 8260C	
Vinyl chloride	ND	2	ug/L	1	07/02/13	07/02/13	EPA 8260C	
Xylenes, total	ND	5	ug/L	1	07/02/13	07/02/13	EPA 8260C	

GRACE ANALYTICAL LAB, INC.

5300 McDermott Drive • Berkeley, IL 60163 • Tel. (708) 449-9449

Your logical choice for custom laboratory solutions

IL ELAP / NELAC Accreditation # 100292

Terracon Consultants, Inc.	Project Name: Chicago DOE	SN: 2013722165116
650 W. Lake St., Ste. 420	Project Number: 650 W. 83 / A2137008	Reported By: AM
Chicago IL, 60661	Project Manager: Richard O'Brien	07/22/13 16:50

Client Sample ID: MW-5

Lab Sample ID: 3062803-05 (Water)

Analyte	Result	Reporting Limit	Units	Dilution	Prepared	Analyzed	Method	Qualifiers
Grace Analytical Lab, Inc.								
Chlorinated Pesticides and PCBs								
4,4'-DDD	ND	0.16	ug/L	1	07/19/13	07/20/13	EPA 8081B/8082A	
4,4'-DDE	ND	0.16	ug/L	1	07/19/13	07/20/13	EPA 8081B/8082A	
4,4'-DDT	ND	0.16	ug/L	1	07/19/13	07/20/13	EPA 8081B/8082A	
Aldrin	ND	0.08	ug/L	1	07/19/13	07/20/13	EPA 8081B/8082A	
alpha-BHC	ND	0.08	ug/L	1	07/19/13	07/20/13	EPA 8081B/8082A	
Aroclor-1016	ND	0.80	ug/L	1	07/19/13	07/20/13	EPA 8081B/8082A	
Aroclor-1221	ND	0.80	ug/L	1	07/19/13	07/20/13	EPA 8081B/8082A	
Aroclor-1232	ND	0.80	ug/L	1	07/19/13	07/20/13	EPA 8081B/8082A	
Aroclor-1242	ND	0.80	ug/L	1	07/19/13	07/20/13	EPA 8081B/8082A	
Aroclor-1248	ND	0.80	ug/L	1	07/19/13	07/20/13	EPA 8081B/8082A	
Aroclor-1254	ND	1.60	ug/L	1	07/19/13	07/20/13	EPA 8081B/8082A	
Aroclor-1260	ND	1.60	ug/L	1	07/19/13	07/20/13	EPA 8081B/8082A	
beta-BHC	ND	0.08	ug/L	1	07/19/13	07/20/13	EPA 8081B/8082A	
Chlordane	ND	0.08	ug/L	1	07/19/13	07/20/13	EPA 8081B/8082A	
delta-BHC	ND	0.08	ug/L	1	07/19/13	07/20/13	EPA 8081B/8082A	
Dieldrin	ND	0.16	ug/L	1	07/19/13	07/20/13	EPA 8081B/8082A	
Endosulfan I	ND	0.08	ug/L	1	07/19/13	07/20/13	EPA 8081B/8082A	
Endosulfan II	ND	0.16	ug/L	1	07/19/13	07/20/13	EPA 8081B/8082A	
Endosulfan sulfate	ND	0.16	ug/L	1	07/19/13	07/20/13	EPA 8081B/8082A	
Endrin	ND	0.16	ug/L	1	07/19/13	07/20/13	EPA 8081B/8082A	
Endrin aldehyde	ND	0.16	ug/L	1	07/19/13	07/20/13	EPA 8081B/8082A	
Endrin ketone	ND	0.16	ug/L	1	07/19/13	07/20/13	EPA 8081B/8082A	
gamma-BHC (Lindane)	ND	0.08	ug/L	1	07/19/13	07/20/13	EPA 8081B/8082A	

GRACE ANALYTICAL LAB, INC.

5300 McDermott Drive • Berkeley, IL 60163 • Tel. (708) 449-9449

Your logical choice for custom laboratory solutions

IL ELAP / NELAC Accreditation # 100292

Terracon Consultants, Inc.	Project Name: Chicago DOE	SN: 2013722165116
650 W. Lake St., Ste. 420	Project Number: 650 W. 83 / A2137008	Reported By: AM
Chicago IL, 60661	Project Manager: Richard O'Brien	07/22/13 16:50

Client Sample ID: MW-5

Lab Sample ID: 3062803-05 (Water)

Analyte	Result	Reporting Limit	Units	Dilution	Prepared	Analyzed	Method	Qualifiers
Grace Analytical Lab, Inc.								
Chlorinated Pesticides and PCBs								
Heptachlor	ND	0.08	ug/L	1	07/19/13	07/20/13	EPA 8081B/8082A	
Heptachlor epoxide	ND	0.08	ug/L	1	07/19/13	07/20/13	EPA 8081B/8082A	
Methoxychlor	ND	0.80	ug/L	1	07/19/13	07/20/13	EPA 8081B/8082A	
Toxaphene	ND	0.16	ug/L	1	07/19/13	07/20/13	EPA 8081B/8082A	
Semivolatile Organic Compounds								
1,2,4-Trichlorobenzene	ND	12.0	ug/L	1	07/19/13	07/20/13	EPA 8270D	
1,2-Dichlorobenzene	ND	10.0	ug/L	1	07/19/13	07/20/13	EPA 8270D	
1,3-Dichlorobenzene	ND	10.0	ug/L	1	07/19/13	07/20/13	EPA 8270D	
1,3-Dinitrobenzene	ND	10.0	ug/L	1	07/19/13	07/20/13	EPA 8270D	
1,4-Dichlorobenzene	ND	10.0	ug/L	1	07/19/13	07/20/13	EPA 8270D	
2,4,5-Trichlorophenol	ND	10.0	ug/L	1	07/19/13	07/20/13	EPA 8270D	
2,4,6-Trichlorophenol	ND	10.0	ug/L	1	07/19/13	07/20/13	EPA 8270D	
2,4-Dichlorophenol	ND	10.0	ug/L	1	07/19/13	07/20/13	EPA 8270D	
2,4-Dimethylphenol	ND	10.0	ug/L	1	07/19/13	07/20/13	EPA 8270D	
2,4-Dinitrophenol	ND	10.0	ug/L	1	07/19/13	07/20/13	EPA 8270D	
2,4-Dinitrotoluene	ND	0.40	ug/L	1	07/19/13	07/20/13	EPA 8270D	
2,6-Dinitrotoluene	ND	0.70	ug/L	1	07/19/13	07/20/13	EPA 8270D	
2-Chloronaphthalene	ND	12.0	ug/L	1	07/19/13	07/20/13	EPA 8270D	
2-Chlorophenol	ND	10.0	ug/L	1	07/19/13	07/20/13	EPA 8270D	
2-Methylnaphthalene	ND	12.0	ug/L	1	07/19/13	07/20/13	EPA 8270D	
2-Methylphenol	ND	11.0	ug/L	1	07/19/13	07/20/13	EPA 8270D	
2-Nitroaniline	ND	50.0	ug/L	1	07/19/13	07/20/13	EPA 8270D	
2-Nitrophenol	ND	13.0	ug/L	1	07/19/13	07/20/13	EPA 8270D	
3,3'-Dichlorobenzidine	ND	20.0	ug/L	1	07/19/13	07/20/13	EPA 8270D	
3/4-Methylphenol	ND	10.0	ug/L	1	07/19/13	07/20/13	EPA 8270D	
3-Nitroaniline	ND	50.0	ug/L	1	07/19/13	07/20/13	EPA 8270D	
4,6-Dinitro-2-methylphenol	ND	50.0	ug/L	1	07/19/13	07/20/13	EPA 8270D	
4-Bromophenyl phenyl ether	ND	10.0	ug/L	1	07/19/13	07/20/13	EPA 8270D	
4-Chloro-3-methylphenol	ND	20.0	ug/L	1	07/19/13	07/20/13	EPA 8270D	
4-Chloroaniline	ND	20.0	ug/L	1	07/19/13	07/20/13	EPA 8270D	
4-Chlorophenyl phenyl ether	ND	10.0	ug/L	1	07/19/13	07/20/13	EPA 8270D	
4-Nitroaniline	ND	20.0	ug/L	1	07/19/13	07/20/13	EPA 8270D	
4-Nitrophenol	ND	50.0	ug/L	1	07/19/13	07/20/13	EPA 8270D	
Acenaphthene	ND	10.0	ug/L	1	07/19/13	07/20/13	EPA 8270D	
Acenaphthylene	ND	10.0	ug/L	1	07/19/13	07/20/13	EPA 8270D	
Anthracene	ND	10.0	ug/L	1	07/19/13	07/20/13	EPA 8270D	

GRACE ANALYTICAL LAB, INC.

5300 McDermott Drive • Berkeley, IL 60163 • Tel. (708) 449-9449

Your logical choice for custom laboratory solutions

IL ELAP / NELAC Accreditation # 100292

Terracon Consultants, Inc.	Project Name: Chicago DOE	SN: 2013722165116
650 W. Lake St., Ste. 420	Project Number: 650 W. 83 / A2137008	Reported By: AM
Chicago IL, 60661	Project Manager: Richard O'Brien	07/22/13 16:50

Client Sample ID: MW-5

Lab Sample ID: 3062803-05 (Water)

Analyte	Result	Reporting Limit	Units	Dilution	Prepared	Analyzed	Method	Qualifiers
Grace Analytical Lab, Inc.								
Semivolatile Organic Compounds								
Benzo (a) anthracene	ND	2.00	ug/L	1	07/19/13	07/20/13	EPA 8270D	
Benzo (a) pyrene	ND	3.00	ug/L	1	07/19/13	07/20/13	EPA 8270D	
Benzo (b) fluoranthene	ND	2.00	ug/L	1	07/19/13	07/20/13	EPA 8270D	
Benzo (g,h,i) perylene	ND	10.0	ug/L	1	07/19/13	07/20/13	EPA 8270D	
Benzo (k) fluoranthene	ND	5.00	ug/L	1	07/19/13	07/20/13	EPA 8270D	
Benzoic acid	ND	50.0	ug/L	1	07/19/13	07/20/13	EPA 8270D	
Benzyl alcohol	ND	20.0	ug/L	1	07/19/13	07/20/13	EPA 8270D	
Bis(2-chloroethoxy)methane	ND	10.0	ug/L	1	07/19/13	07/20/13	EPA 8270D	
Bis(2-chloroethyl)ether	ND	10.0	ug/L	1	07/19/13	07/20/13	EPA 8270D	
Bis(2-chloroisopropyl)ether	ND	10.0	ug/L	1	07/19/13	07/20/13	EPA 8270D	
Bis(2-ethylhexyl)phthalate	ND	5.00	ug/L	1	07/19/13	07/20/13	EPA 8270D	
Butyl benzyl phthalate	ND	10.0	ug/L	1	07/19/13	07/20/13	EPA 8270D	
Carbazole	ND	10.0	ug/L	1	07/19/13	07/20/13	EPA 8270D	
Chrysene	ND	3.00	ug/L	1	07/19/13	07/20/13	EPA 8270D	
Dibenz (a,h) anthracene	ND	10.0	ug/L	1	07/19/13	07/20/13	EPA 8270D	
Dibenzofuran	ND	10.0	ug/L	1	07/19/13	07/20/13	EPA 8270D	
Diethyl phthalate	ND	10.0	ug/L	1	07/19/13	07/20/13	EPA 8270D	
Dimethyl phthalate	ND	50.0	ug/L	1	07/19/13	07/20/13	EPA 8270D	
Di-n-butyl phthalate	ND	11.0	ug/L	1	07/19/13	07/20/13	EPA 8270D	
Di-n-octyl phthalate	ND	10.0	ug/L	1	07/19/13	07/20/13	EPA 8270D	
Fluoranthene	ND	10.0	ug/L	1	07/19/13	07/20/13	EPA 8270D	
Fluorene	ND	10.0	ug/L	1	07/19/13	07/20/13	EPA 8270D	
Hexachlorobenzene	ND	3.00	ug/L	1	07/19/13	07/20/13	EPA 8270D	
Hexachlorobutadiene	ND	11.0	ug/L	1	07/19/13	07/20/13	EPA 8270D	
Hexachlorocyclopentadiene	ND	12.0	ug/L	1	07/19/13	07/20/13	EPA 8270D	
Hexachloroethane	ND	0.80	ug/L	1	07/19/13	07/20/13	EPA 8270D	
Indeno(1,2,3-cd)pyrene	ND	10.0	ug/L	1	07/19/13	07/20/13	EPA 8270D	
Isophorone	ND	10.0	ug/L	1	07/19/13	07/20/13	EPA 8270D	
Naphthalene	ND	12.0	ug/L	1	07/19/13	07/20/13	EPA 8270D	
Nitrobenzene	ND	12.0	ug/L	1	07/19/13	07/20/13	EPA 8270D	
N-Nitrosodi-n-propylamine	ND	0.70	ug/L	1	07/19/13	07/20/13	EPA 8270D	
N-Nitrosodiphenylamine	ND	4.00	ug/L	1	07/19/13	07/20/13	EPA 8270D	
Pentachlorophenol	ND	2.50	ug/L	1	07/19/13	07/20/13	EPA 8270D	
Phenanthrene	ND	10.0	ug/L	1	07/19/13	07/20/13	EPA 8270D	
Phenol	ND	10.0	ug/L	1	07/19/13	07/20/13	EPA 8270D	
Pyrene	ND	10.0	ug/L	1	07/19/13	07/20/13	EPA 8270D	

GRACE ANALYTICAL LAB, INC.

5300 McDermott Drive • Berkeley, IL 60163 • Tel. (708) 449-9449

Your logical choice for custom laboratory solutions

IL ELAP / NELAC Accreditation # 100292

Terracon Consultants, Inc.	Project Name: Chicago DOE	SN: 2013722165116
650 W. Lake St., Ste. 420	Project Number: 650 W. 83 / A2137008	Reported By: AM
Chicago IL, 60661	Project Manager: Richard O'Brien	07/22/13 16:50

Client Sample ID: MW-10

Lab Sample ID: 3062803-06 (Water)

Grace Analytical Lab, Inc.

Polynuclear Aromatic Compounds by GC/MS with Selected Ion Monitoring

Analyte	Result	Reporting Limit	Units	Dilution	Prepared	Analyzed	Method	Qualifiers
Acenaphthene	ND	1.00	ug/L	1	07/19/13	07/19/13	EPA 8270C	
Acenaphthylene	ND	1.00	ug/L	1	07/19/13	07/19/13	EPA 8270C	
Anthracene	ND	0.50	ug/L	1	07/19/13	07/19/13	EPA 8270C	
Benzo (a) anthracene	ND	0.10	ug/L	1	07/19/13	07/19/13	EPA 8270C	
Benzo (a) pyrene	ND	0.20	ug/L	1	07/19/13	07/19/13	EPA 8270C	
Benzo (b) fluoranthene	ND	0.18	ug/L	1	07/19/13	07/19/13	EPA 8270C	
Benzo (g,h,i) perylene	ND	0.30	ug/L	1	07/19/13	07/19/13	EPA 8270C	
Benzo (k) fluoranthene	ND	0.17	ug/L	1	07/19/13	07/19/13	EPA 8270C	
Chrysene	ND	0.20	ug/L	1	07/19/13	07/19/13	EPA 8270C	
Dibenz (a,h) anthracene	ND	0.20	ug/L	1	07/19/13	07/19/13	EPA 8270C	
Fluoranthene	ND	0.20	ug/L	1	07/19/13	07/19/13	EPA 8270C	
Fluorene	ND	2.00	ug/L	1	07/19/13	07/19/13	EPA 8270C	
Indeno(1,2,3-cd)pyrene	ND	0.30	ug/L	1	07/19/13	07/19/13	EPA 8270C	
Naphthalene	ND	1.00	ug/L	1	07/19/13	07/19/13	EPA 8270C	
Phenanthrene	ND	0.50	ug/L	1	07/19/13	07/19/13	EPA 8270C	
Pyrene	ND	0.20	ug/L	1	07/19/13	07/19/13	EPA 8270C	

GRACE ANALYTICAL LAB, INC.

5300 McDermott Drive • Berkeley, IL 60163 • Tel. (708) 449-9449

Your logical choice for custom laboratory solutions

IL ELAP / NELAC Accreditation # 100292

Terracon Consultants, Inc.	Project Name: Chicago DOE	SN: 2013722165116
650 W. Lake St., Ste. 420	Project Number: 650 W. 83 / A2137008	Reported By: AM
Chicago IL, 60661	Project Manager: Richard O'Brien	07/22/13 16:50

Client Sample ID: MW-34

Lab Sample ID: 3062803-07 (Water)

Analyte	Result	Reporting Limit	Units	Dilution	Prepared	Analyzed	Method	Qualifiers
Grace Analytical Lab, Inc.								
Polynuclear Aromatic Compounds by GC/MS with Selected Ion Monitoring								
Acenaphthene	ND	1.00	ug/L	1	07/19/13	07/19/13	EPA 8270C	
Acenaphthylene	ND	1.00	ug/L	1	07/19/13	07/19/13	EPA 8270C	
Anthracene	ND	0.50	ug/L	1	07/19/13	07/19/13	EPA 8270C	
Benzo (a) anthracene	ND	0.10	ug/L	1	07/19/13	07/19/13	EPA 8270C	
Benzo (a) pyrene	ND	0.20	ug/L	1	07/19/13	07/19/13	EPA 8270C	
Benzo (b) fluoranthene	ND	0.18	ug/L	1	07/19/13	07/19/13	EPA 8270C	
Benzo (g,h,i) perylene	ND	0.30	ug/L	1	07/19/13	07/19/13	EPA 8270C	
Benzo (k) fluoranthene	ND	0.17	ug/L	1	07/19/13	07/19/13	EPA 8270C	
Chrysene	ND	0.20	ug/L	1	07/19/13	07/19/13	EPA 8270C	
Dibenz (a,h) anthracene	ND	0.20	ug/L	1	07/19/13	07/19/13	EPA 8270C	
Fluoranthene	ND	0.20	ug/L	1	07/19/13	07/19/13	EPA 8270C	
Fluorene	ND	2.00	ug/L	1	07/19/13	07/19/13	EPA 8270C	
Indeno(1,2,3-cd)pyrene	ND	0.30	ug/L	1	07/19/13	07/19/13	EPA 8270C	
Naphthalene	ND	1.00	ug/L	1	07/19/13	07/19/13	EPA 8270C	
Phenanthrene	ND	0.50	ug/L	1	07/19/13	07/19/13	EPA 8270C	
Pyrene	ND	0.20	ug/L	1	07/19/13	07/19/13	EPA 8270C	

GRACE ANALYTICAL LAB, INC.
5300 McDermott Drive • Berkeley, IL 60163 • Tel. (708) 449-9449
Your logical choice for custom laboratory solutions
IL ELAP / NELAC Accreditation # 100292

Terracon Consultants, Inc.	Project Name: Chicago DOE	SN: 2013722165116
650 W. Lake St., Ste. 420	Project Number: 650 W. 83 / A2137008	Reported By: AM
Chicago IL, 60661	Project Manager: Richard O'Brien	07/22/13 16:50

Notes and Definitions

DET	Analyte DETECTED
ND	Analyte NOT DETECTED at or above the reporting limit
NR	Not Reported
dry	Sample results reported on a dry weight basis
RPD	Relative Percent Difference

GRACE ANALYTICAL LAB, INC.

CHAIN OF CUSTODY PAGE 1 OF 1

3062803

PHONE (708) 449-9449 FAX (708) 449-3663
5300-B McDermott Drive Berkeley, IL 60163

CLIENT INFORMATION
Project Manager: Richard O'Brien
Company: Terracon
R:
Phone: Fax:
Project Name: 650west 83
Project ID#: A2137208
Sampler: J Juliano
Jason Juliano

SAMPLE RECEIVING RECORDS
Samples Received On Ice ☒ YES ☐ NO
Sample Temperature(If not On Ice) 3.4 c
Samples Intact/Not Leaking ☒ YES ☐ NO

SAMPLE CHARACTERISTICS
☐ NONHAZARDOUS
☐ Special Handling Required (Please Describe)

TURNAROUND STANDARD
Date Required:
Schedule in advance to insure RUSH Processing
Comments / Special Instructions

QC Levels: None, Level 2, Level 3, Level 4

GAL SAMPLE ID	FIELD ID, LOCATION / DESCRIPTION	DATE	TIME	MATRIX	Number of Containers	PRESERVATIVE	ANALYSES NEEDED: VOC	SVOC	Pesticides	PCB	Tal Inorganics	Herbicides	PNA	RCRA metals	REMARKS
3062803-01	mw-10	6-28-13	1310	W			X						X	X	
-02	mw-34		1240 ~~1250~~	W			X						X	X	
-03	mw-5	↓	1330	W			X	X	X	X	X	X			
-04	Trip Blank	6-28-13	1310	W			X								

MATRIX: Soil (S), Surface Water (SW), Ground Water (GW), Waste Water (WW), Waste/Solid (W/S), Waste/Liquid (W/L), Drinking Water (DW), Air Cassettes (AC); Note if COMPOSITE (C) or GRAB (G)
PRESERVATIVE: Nitric Acid (HNO_3), Hydrochloric Acid (HCl), Sodium Hydroxide (NaOH), Sulfuric Acid (H_2SO_4), Sodium Bisulfate ($NaHSO_4$), Methanol(CH_3OH), None

Relinquished By (Signature):	Date/Time:	Received By (Signature):	Date/Time:	Relinquished By (Signature):	Date/Time:	Received For Lab By (Signature):	Date/Time:
[signature]	6/28/13 1500						
Relinquished By (Signature):	Date/Time	Received By (Signature):	Date/Time	Relinquished By (Signature):	Date/Time	Received For Lab By (Signature):	Date/Time
						[signature]	6/28/13 1500

WHITE - ORIGINAL FILE COPY CANARY - LAB COPY PINK - SAMPLER COPY

Grace Analytical lab, inc.
5300-B McDermott Dr. Berkeley, IL 60163 . Tel. (708) 449-9449 . . Fax (708) 449-3663

Grace Analytical lab, inc.

5300-B McDermott Dr. Berkeley, IL 60163 . Tel. (708) 449-9449 . . Fax (708) 449-3663

SAMPLE/COOLER RECEIPT FORM GAL JOB ID#: 3062803
Client Name: Terracon Consultants, Inc. Cooler Received/Opened: 06/28/2013 at 15:00
Project ID: A2137008

Signed by: _____
Log-In Personnel Signature

		Yes	No	NA
1.	Temperature of Cooler when triaged: 3.4°C			
2.	Were custody seals on outside of cooler?...	☐	☐	☒
3.	Were custody seals on containers intact?	☐	☐	☒
	If YES: Were the seals intact, signed, and dated correctly?	☐	☐	☐
4.	Were Chain of Custody form inside cooler?	☒	☐	☐
5.	Were Chain of Custody form properly filled out (ink, signed, etc)?.	☒	☐	☐
6.	Did you sign the Chain of Custody form in the appropriate place?	☒	☐	☐
7.	Was there packing material used	☐	☒	☐
	If YES: ☐Bubblewrap ☐Peanuts ☐Vermiculite ☐Other ☐ None			
8.	Cooling process: ☒Ice ☐Icepack ☐Ice(direct contact) ☐Dry ice ☐other ☐None			
9.	Did all containers arrive in good condition (unbroken)?	☒	☐	☐
10.	Were all container labels complete (ID #, data, signed, preserv., etc	☒	☐	☐
11.	Did all container labels and tags agree with Chain of Custody form	☒	☐	☐
12.	Were correct containers used for the analysis requested	☒	☐	☐
13.	a. Were Water VOA vials received	☒	☐	☐
	b. Was there any observable head space present in any VOA vial	☐	☒	☐
14.	Was sufficient amount of sample sent in each container	☒	☐	☐
15.	Were correct preservatives used	☒	☐	☐
	If not, record _____			
16.	Was residual chlorine present	☐	☐	☒

17. Indicate the Airbill Tracking Number and Name of Courier below:
☐Fed-Ex ☐UPS ☐Velocity ☐Airborne ☐Route ☐Misc. ☒Hand delivered ☐Picked Up

18. If a Non-Conformance exists, record reason: _____

Grace Analytical Laboratory, Inc.
5300B McDermott Drive
Berkeley, Illinois 60163
Phone: (708) 449-9449 · Fax: (708) 449-3663
E-mail:gkim@gracelabinc.com
NELAC:100246, FDA: 3007291509

CHAIN OF CUSTODY RECORD

3062803

Page 1 of 1 pgs.

Company Name: Terracon
Street Address: 650 W Lake St Ste 420
City: Chicago State: IL Zip: 60661
Phone: 312-515-0014 Fax: 312-575-0111 e-mail:
Send Report To: rmabrien@terracon.com Via Fax
Sampled By: Matt Toth

Project: A2137008
Project Name: 650 W 83rd Street
PO#:
Matrix Codes: S=Soil W=Water O=Other

Analysis

Date/Time Taken	Sample Description	Matrix	SVOCs	PNAs	Pesticides	PCBs				Comments	Lab ID
										STD TAT	
7/9/13 10:00	MW-5	W	X		X	X					3062803-05
7/9/13 9:30	MW-10	W		X							-06
7/9/13 9:00	MW-34	W		X							-07

FOR LAB USE ONLY
Cooler Temperature, 0-6°C Yes ✓ No 1.4 °C
Received within 6 hrs of collection
Ice Present Yes No
Sample Refrigerated: Yes No
Refrigerator Temperature °C
5035 Vials Frozen: Yes No
Freezer Temperature °C
Containers Received Preserved Yes No NA

Notes and Special Instructions

Relinquished By: Matt Toth Date/Time 7/9/13 11:40 Received By: Robin Marie Date/Time 7/9/13 11:40
Relinquished By: Date/Time Received By: Date/Time

Grace Analytical lab, inc.

5300-B McDermott Dr. Berkeley, IL 60163 . Tel. (708) 449-9449 . . Fax (708) 449-3663

SAMPLE/COOLER RECEIPT FORM **GAL JOB ID#: 3062803**
Client Name: Terracon Consultants, Inc. **Cooler Received/Opened: 07/19/2013 at 11:40**
Project ID: A2137008

Signed by: _____
Log-In Personnel Signature

		Yes	No	NA
18.	Temperature of Cooler when triaged: 1.4°C			
19.	Were custody seals on outside of cooler?...	☐	☐	☒
20.	Were custody seals on containers intact?	☐	☐	☒
	If YES: Were the seals intact, signed, and dated correctly?	☐	☐	☐
21.	Were Chain of Custody form inside cooler?	☒	☐	☐
22.	Were Chain of Custody form properly filled out (ink, signed, etc)?.	☒	☐	☐
23.	Did you sign the Chain of Custody form in the appropriate place?	☒	☐	☐
24.	Was there packing material used	☐	☒	☐
	If YES: ☐Bubblewrap ☐Peanuts ☐Vermiculite ☐Other ☐ None			
25.	Cooling process: ☒Ice ☐Icepack ☐Ice(direct contact) ☐Dry ice ☐other ☐None			
26.	Did all containers arrive in good condition (unbroken)?	☒	☐	☐
27.	Were all container labels complete (ID #, data, signed, preserv., etc	☒	☐	☐
28.	Did all container labels and tags agree with Chain of Custody form	☒	☐	☐
29.	Were correct containers used for the analysis requested	☒	☐	☐
30.	a. Were Water VOA vials received	☒	☐	☐
	b. Was there any observable head space present in any VOA vial	☐	☒	☐
31.	Was sufficient amount of sample sent in each container	☒	☐	☐
32.	Were correct preservatives used	☒	☐	☐
	If not, record _____			
33.	Was residual chlorine present	☐	☐	☒

34. Indicate the Airbill Tracking Number and Name of Courier below:
☐Fed-Ex ☐UPS ☐Velocity ☐Airborne ☐Route ☐Misc. ☒Hand delivered ☐Picked Up

18. If a Non-Conformance exists, record reason: _____

STAT Analysis Corporation
2242 West Harrison St., Suite 200, Chicago, IL 60612-3766
Tel: (312) 733-0551 Fax: (312) 733-2386 STATinfo@STATAnalysis.com
Accreditations: IEPA ELAP 100445; ORELAP IL300001; AIHA-LAP, LLC 101160; NVLAP LabCode 101202-0

February 27, 2015

Terracon Consultants, Inc.
135 Ambassador Drive
Naperville, IL 60540
Telephone: (630) 717-4263
Fax: (630) 357-9489

Analytical Report for STAT Work Order: 15020474 Revision 0

RE: A2157000, 650 W. 83rd St., Chicago, IL

Dear Richard O'Brien:

STAT Analysis received 17 samples for the referenced project on 2/20/2015 3:45:00 PM. The analytical results are presented in the following report.

All analyses were performed in accordance with the requirements of 35 IAC Part 186 / NELAC standards. Analyses were performed in accordance with methods as referenced on the analytical report. Those analytical results expressed on a dry weight basis are also noted on the analytical report.

All analyses were performed within established holding time criteria, and all Quality Control criteria met EPA or laboratory specifications except when noted in the Case Narrative or Analytical Report. If required, an estimate of uncertainty for the analyses can be provided. A listing of accredited methods/parameters can also be provided.

Thank you for the opportunity to serve you and I look forward to working with you in the future. If you have any questions regarding the enclosed materials, please contact me at (312) 733-0551.

Sincerely,

Frank Capoccia
Project Manager

The information contained in this report and any attachments is confidential information intended only for the use of the individual or entities named above. The results of this report relate only to the samples tested. If you have received this report in error, please notify us immediately by phone. This report shall not be reproduced, except in its entirety, unless written approval has been obtained from the laboratory. This analytical report shall become property of the Customer upon payment in full. Otherwise, STAT will be under no obligation to support, defend or discuss the analytical report.

Client: Terracon Consultants, Inc.
Project: A2157000, 650 W. 83rd St., Chicago, IL
Work Order: 15020474 Revision 0

Work Order Sample Summary

Lab Sample ID	Client Sample ID	Tag Number	Collection Date	Date Received
15020474-001A	B-201 (4-6')		2/20/2015 10:45:00 AM	2/20/2015
15020474-002A	B-202 (4-6')		2/20/2015 11:05:00 AM	2/20/2015
15020474-003A	B-203 (4-6')		2/20/2015 10:05:00 AM	2/20/2015
15020474-004A	B-203 (6-8')		2/20/2015 10:05:00 AM	2/20/2015
15020474-005A	B-203 (8-10')		2/20/2015 10:05:00 AM	2/20/2015
15020474-006A	B-204 (4-6')		2/20/2015 10:15:00 AM	2/20/2015
15020474-007A	B-205 (4-6')		2/20/2015 9:45:00 AM	2/20/2015
15020474-008A	B-206 (4-6')		2/20/2015 9:35:00 AM	2/20/2015
15020474-009A	B-207 (6-8')		2/20/2015 8:45:00 AM	2/20/2015
15020474-010A	B-208 (6-8')		2/20/2015 8:20:00 AM	2/20/2015
15020474-011A	B-209 (6-8')		2/20/2015 9:05:00 AM	2/20/2015
15020474-012A	B-210 (6-8')		2/20/2015 9:20:00 AM	2/20/2015
15020474-013A	B-211 (6-8')		2/20/2015 11:45:00 AM	2/20/2015
15020474-014A	B-212 (1-3')		2/20/2015 12:35:00 PM	2/20/2015
15020474-015A	B-213 (1-3')		2/20/2015 12:15:00 PM	2/20/2015
15020474-016A	B-213 (4-6')		2/20/2015 12:25:00 PM	2/20/2015
15020474-017A	B-214 (1-3')		2/20/2015 1:45:00 PM	2/20/2015

STAT Analysis Corporation

Date: *February 27, 2015*

CLIENT:	Terracon Consultants, Inc.
Project:	A2157000, 650 W. 83rd St., Chicago, IL
Work Order:	15020474 Revision 0

CASE NARRATIVE

The metals Laboratory Control Sample/Laboratory Control Sample Duplicate (LCS/LCSD) (preparation batch 82663) had recovery outside of control limits for Antimony (148% recovery, QC Limits 80-120%).

STAT Analysis Corporation
2242 West Harrison St., Suite 200, Chicago, IL 60612-3766
Tel: (312) 733-0551 Fax: (312) 733-2386 STATinfo@STATAnalysis.com
Accreditations:IEPA ELAP 100445;ORELAP IL300001;AIHA-LAP, LLC 101160;NVLAP LabCode 101202-0

Date Reported: February 27, 2015
Date Printed: February 27, 2015

ANALYTICAL RESULTS

Client: Terracon Consultants, Inc.
Project: A2157000, 650 W. 83rd St., Chicago, IL **Work Order:** 15020474 Revision 0

Lab ID: 15020474-001 **Collection Date** 2/20/2015 10:45:00 AM
Client Sample ID: B-201 (4-6') **Matrix:** Soil

Analyses	Result	RL	Qualifier	Units	DF	Date Analyzed
TCLP Metals by ICP/MS	**SW1311/6020 (SW3005A)**			Prep Date: **2/23/2015**		Analyst: **JG**
Lead	0.14	0.0050		mg/L	5	2/24/2015

Lab ID: 15020474-002 **Collection Date** 2/20/2015 11:05:00 AM
Client Sample ID: B-202 (4-6') **Matrix:** Soil

Analyses	Result	RL	Qualifier	Units	DF	Date Analyzed
TCLP Metals by ICP/MS	**SW1311/6020 (SW3005A)**			Prep Date: **2/23/2015**		Analyst: **JG**
Lead	0.38	0.0050		mg/L	5	2/24/2015

Lab ID: 15020474-004 **Collection Date** 2/20/2015 10:05:00 AM
Client Sample ID: B-203 (6-8') **Matrix:** Soil

Analyses	Result	RL	Qualifier	Units	DF	Date Analyzed
TCLP Metals by ICP/MS	**SW1311/6020 (SW3005A)**			Prep Date: **2/23/2015**		Analyst: **JG**
Lead	0.046	0.0050		mg/L	5	2/24/2015

Lab ID: 15020474-006 **Collection Date** 2/20/2015 10:15:00 AM
Client Sample ID: B-204 (4-6') **Matrix:** Soil

Analyses	Result	RL	Qualifier	Units	DF	Date Analyzed
TCLP Metals by ICP/MS	**SW1311/6020 (SW3005A)**			Prep Date: **2/23/2015**		Analyst: **JG**
Lead	0.27	0.0050		mg/L	5	2/24/2015

Lab ID: 15020474-007 **Collection Date** 2/20/2015 9:45:00 AM
Client Sample ID: B-205 (4-6') **Matrix:** Soil

Analyses	Result	RL	Qualifier	Units	DF	Date Analyzed
TCLP Metals by ICP/MS	**SW1311/6020 (SW3005A)**			Prep Date: **2/23/2015**		Analyst: **JG**
Lead	0.16	0.0050		mg/L	5	2/24/2015

Qualifiers:
ND - Not Detected at the Reporting Limit
J - Analyte detected below quantitation limits
B - Analyte detected in the associated Method Blank
HT - Sample received past holding time
* - Non-accredited parameter
RL - Reporting / Quantitation Limit for the analysis
S - Spike Recovery outside accepted recovery limits
R - RPD outside accepted recovery limits
E - Value above quantitation range
H - Holding time exceeded

STAT Analysis Corporation
2242 West Harrison St., Suite 200, Chicago, IL 60612-3766
Tel: (312) 733-0551 Fax: (312) 733-2386 STATinfo@STATAnalysis.com
Accreditations:IEPA ELAP 100445;ORELAP IL300001;AIHA-LAP, LLC 101160;NVLAP LabCode 101202-0

Date Reported: February 27, 2015
Date Printed: February 27, 2015

ANALYTICAL RESULTS

Client: Terracon Consultants, Inc.
Project: A2157000, 650 W. 83rd St., Chicago, IL **Work Order:** 15020474 Revision 0

Lab ID: 15020474-008 **Collection Date** 2/20/2015 9:35:00 AM
Client Sample ID: B-206 (4-6') **Matrix:** Soil

Analyses	Result	RL	Qualifier	Units	DF	Date Analyzed
TCLP Metals by ICP/MS	**SW1311/6020 (SW3005A)**			Prep Date: **2/23/2015**		Analyst: **JG**
Lead	0.14	0.0050		mg/L	5	2/24/2015

Lab ID: 15020474-009 **Collection Date** 2/20/2015 8:45:00 AM
Client Sample ID: B-207 (6-8') **Matrix:** Soil

Analyses	Result	RL	Qualifier	Units	DF	Date Analyzed
Polynuclear Aromatic Hydrocarbons by GC/MS	**SW8270C (SW3550B)**			Prep Date: **2/23/2015**		Analyst: **DM**
Acenaphthene	0.42	0.044		mg/Kg-dry	1	2/24/2015
Acenaphthylene	0.21	0.044		mg/Kg-dry	1	2/24/2015
Anthracene	1.4	0.044		mg/Kg-dry	1	2/24/2015
Benz(a)anthracene	3.3	0.044		mg/Kg-dry	1	2/24/2015
Benzo(a)pyrene	2.8	0.044		mg/Kg-dry	1	2/24/2015
Benzo(b)fluoranthene	2.1	0.044		mg/Kg-dry	1	2/24/2015
Benzo(g,h,i)perylene	1.8	0.044		mg/Kg-dry	1	2/24/2015
Benzo(k)fluoranthene	2.0	0.044		mg/Kg-dry	1	2/24/2015
Chrysene	3.6	0.044		mg/Kg-dry	1	2/24/2015
Dibenz(a,h)anthracene	0.90	0.044		mg/Kg-dry	1	2/24/2015
Fluoranthene	6.1	0.22		mg/Kg-dry	5	2/25/2015
Fluorene	0.56	0.044		mg/Kg-dry	1	2/24/2015
Indeno(1,2,3-cd)pyrene	1.4	0.044		mg/Kg-dry	1	2/24/2015
Naphthalene	0.26	0.044		mg/Kg-dry	1	2/24/2015
Phenanthrene	5.0	0.044		mg/Kg-dry	1	2/24/2015
Pyrene	7.2	0.22		mg/Kg-dry	5	2/25/2015
Percent Moisture	**D2974**			Prep Date: **2/20/2015**		Analyst: **RW**
Percent Moisture	26.5	0.2	*	wt%	1	2/23/2015

Qualifiers:
ND - Not Detected at the Reporting Limit
J - Analyte detected below quantitation limits
B - Analyte detected in the associated Method Blank
HT - Sample received past holding time
* - Non-accredited parameter
RL - Reporting / Quantitation Limit for the analysis
S - Spike Recovery outside accepted recovery limits
R - RPD outside accepted recovery limits
E - Value above quantitation range
H - Holding time exceeded

STAT Analysis Corporation
2242 West Harrison St., Suite 200, Chicago, IL 60612-3766
Tel: (312) 733-0551 Fax: (312) 733-2386 STATinfo@STATAnalysis.com
Accreditations:IEPA ELAP 100445;ORELAP IL300001;AIHA-LAP, LLC 101160;NVLAP LabCode 101202-0

Date Reported: February 27, 2015
Date Printed: February 27, 2015

ANALYTICAL RESULTS

Client: Terracon Consultants, Inc.
Project: A2157000, 650 W. 83rd St., Chicago, IL **Work Order:** 15020474 Revision 0

Lab ID: 15020474-010 **Collection Date** 2/20/2015 8:20:00 AM
Client Sample ID: B-208 (6-8') **Matrix:** Soil

Analyses	Result	RL	Qualifier	Units	DF	Date Analyzed
Polynuclear Aromatic Hydrocarbons by GC/MS	**SW8270C (SW3550B)**			Prep Date: **2/23/2015**		Analyst: **DM**
Acenaphthene	9.0	0.47		mg/Kg-dry	10	2/25/2015
Acenaphthylene	6.3	0.47		mg/Kg-dry	10	2/25/2015
Anthracene	26	0.47		mg/Kg-dry	10	2/25/2015
Benz(a)anthracene	34	0.47		mg/Kg-dry	10	2/25/2015
Benzo(a)pyrene	30	0.47		mg/Kg-dry	10	2/25/2015
Benzo(b)fluoranthene	25	0.47		mg/Kg-dry	10	2/25/2015
Benzo(g,h,i)perylene	14	0.47		mg/Kg-dry	10	2/25/2015
Benzo(k)fluoranthene	25	0.47		mg/Kg-dry	10	2/25/2015
Chrysene	31	0.47		mg/Kg-dry	10	2/25/2015
Dibenz(a,h)anthracene	8.4	0.47		mg/Kg-dry	10	2/25/2015
Fluoranthene	70	4.7		mg/Kg-dry	100	2/25/2015
Fluorene	20	0.47		mg/Kg-dry	10	2/25/2015
Indeno(1,2,3-cd)pyrene	14	0.47		mg/Kg-dry	10	2/25/2015
Naphthalene	32	0.47		mg/Kg-dry	10	2/25/2015
Phenanthrene	88	4.7		mg/Kg-dry	100	2/25/2015
Pyrene	57	4.7		mg/Kg-dry	100	2/25/2015
Percent Moisture	**D2974**			Prep Date: **2/20/2015**		Analyst: **RW**
Percent Moisture	29.6	0.2	*	wt%	1	2/23/2015

Qualifiers:
ND - Not Detected at the Reporting Limit
J - Analyte detected below quantitation limits
B - Analyte detected in the associated Method Blank
HT - Sample received past holding time
* - Non-accredited parameter
RL - Reporting / Quantitation Limit for the analysis
S - Spike Recovery outside accepted recovery limits
R - RPD outside accepted recovery limits
E - Value above quantitation range
H - Holding time exceeded

STAT Analysis Corporation
2242 West Harrison St., Suite 200, Chicago, IL 60612-3766
Tel: (312) 733-0551 Fax: (312) 733-2386 STATinfo@STATAnalysis.com
Accreditations:IEPA ELAP 100445;ORELAP IL300001;AIHA-LAP, LLC 101160;NVLAP LabCode 101202-0

Date Reported: February 27, 2015
Date Printed: February 27, 2015

ANALYTICAL RESULTS

Client: Terracon Consultants, Inc.
Project: A2157000, 650 W. 83rd St., Chicago, IL **Work Order:** 15020474 Revision 0

Lab ID: 15020474-011 **Collection Date** 2/20/2015 9:05:00 AM
Client Sample ID: B-209 (6-8') **Matrix:** Soil

Analyses	Result	RL	Qualifier	Units	DF	Date Analyzed
Polynuclear Aromatic Hydrocarbons by GC/MS	**SW8270C (SW3550B)**			Prep Date: **2/23/2015**		Analyst: **DM**
Acenaphthene	0.11	0.046		mg/Kg-dry	1	2/24/2015
Acenaphthylene	0.11	0.046		mg/Kg-dry	1	2/24/2015
Anthracene	0.20	0.046		mg/Kg-dry	1	2/24/2015
Benz(a)anthracene	0.56	0.046		mg/Kg-dry	1	2/24/2015
Benzo(a)pyrene	0.53	0.046		mg/Kg-dry	1	2/24/2015
Benzo(b)fluoranthene	0.61	0.046		mg/Kg-dry	1	2/24/2015
Benzo(g,h,i)perylene	0.36	0.046		mg/Kg-dry	1	2/24/2015
Benzo(k)fluoranthene	0.37	0.046		mg/Kg-dry	1	2/24/2015
Chrysene	0.70	0.046		mg/Kg-dry	1	2/24/2015
Dibenz(a,h)anthracene	0.19	0.046		mg/Kg-dry	1	2/24/2015
Fluoranthene	1.2	0.046		mg/Kg-dry	1	2/24/2015
Fluorene	0.078	0.046		mg/Kg-dry	1	2/24/2015
Indeno(1,2,3-cd)pyrene	0.28	0.046		mg/Kg-dry	1	2/24/2015
Naphthalene	ND	0.046		mg/Kg-dry	1	2/24/2015
Phenanthrene	0.80	0.046		mg/Kg-dry	1	2/24/2015
Pyrene	1.2	0.046		mg/Kg-dry	1	2/24/2015
Percent Moisture	**D2974**			Prep Date: **2/20/2015**		Analyst: **RW**
Percent Moisture	29.5	0.2	*	wt%	1	2/23/2015

Lab ID: 15020474-013 **Collection Date** 2/20/2015 11:45:00 AM
Client Sample ID: B-211 (6-8') **Matrix:** Soil

Analyses	Result	RL	Qualifier	Units	DF	Date Analyzed
SPLP Metals by ICP/MS	**SW1312/6020 (SW3005A)**			Prep Date: **2/23/2015**		Analyst: **JG**
Lead	0.093	0.0020		mg/L	2	2/23/2015

Lab ID: 15020474-014 **Collection Date** 2/20/2015 12:35:00 PM
Client Sample ID: B-212 (1-3') **Matrix:** Soil

Analyses	Result	RL	Qualifier	Units	DF	Date Analyzed
SPLP Metals by ICP/MS	**SW1312/6020 (SW3005A)**			Prep Date: **2/23/2015**		Analyst: **JG**
Barium	0.023	0.020		mg/L	2	2/23/2015
Selenium	ND	0.0040		mg/L	2	2/23/2015

Qualifiers:
ND - Not Detected at the Reporting Limit
J - Analyte detected below quantitation limits
B - Analyte detected in the associated Method Blank
HT - Sample received past holding time
* - Non-accredited parameter
RL - Reporting / Quantitation Limit for the analysis
S - Spike Recovery outside accepted recovery limits
R - RPD outside accepted recovery limits
E - Value above quantitation range
H - Holding time exceeded

STAT Analysis Corporation
2242 West Harrison St., Suite 200, Chicago, IL 60612-3766
Tel: (312) 733-0551 Fax: (312) 733-2386 STATinfo@STATAnalysis.com
Accreditations:IEPA ELAP 100445;ORELAP IL300001;AIHA-LAP, LLC 101160;NVLAP LabCode 101202-0

Date Reported: February 27, 2015
Date Printed: February 27, 2015

ANALYTICAL RESULTS

Client: Terracon Consultants, Inc.
Project: A2157000, 650 W. 83rd St., Chicago, IL **Work Order:** 15020474 Revision 0

Lab ID: 15020474-015 **Collection Date** 2/20/2015 12:15:00 PM
Client Sample ID: B-213 (1-3') **Matrix:** Soil

Analyses	Result	RL	Qualifier	Units	DF	Date Analyzed
SPLP Metals by ICP/MS		**SW1312/6020 (SW3005A)**		Prep Date: **2/23/2015**		Analyst: **JG**
Aluminum	1.0	0.040		mg/L	2	2/23/2015
Cobalt	ND	0.0040		mg/L	2	2/23/2015
Nickel	ND	0.0080		mg/L	2	2/23/2015

Lab ID: 15020474-016 **Collection Date** 2/20/2015 12:25:00 PM
Client Sample ID: B-213 (4-6') **Matrix:** Soil

Analyses	Result	RL	Qualifier	Units	DF	Date Analyzed
SPLP Metals by ICP/MS		**SW1312/6020 (SW3005A)**		Prep Date: **2/25/2015**		Analyst: **JG**
Antimony	0.0086	0.0060		mg/L	2	2/27/2015
Iron	0.69	0.10		mg/L	2	2/26/2015

Lab ID: 15020474-017 **Collection Date** 2/20/2015 1:45:00 PM
Client Sample ID: B-214 (1-3') **Matrix:** Soil

Analyses	Result	RL	Qualifier	Units	DF	Date Analyzed
SPLP Metals by ICP/MS		**SW1312/6020 (SW3005A)**		Prep Date: **2/23/2015**		Analyst: **JG**
Arsenic	0.0066	0.0040		mg/L	2	2/23/2015
Selenium	ND	0.0040		mg/L	2	2/23/2015

Qualifiers:
ND - Not Detected at the Reporting Limit
J - Analyte detected below quantitation limits
B - Analyte detected in the associated Method Blank
HT - Sample received past holding time
* - Non-accredited parameter
RL - Reporting / Quantitation Limit for the analysis
S - Spike Recovery outside accepted recovery limits
R - RPD outside accepted recovery limits
E - Value above quantitation range
H - Holding time exceeded

STAT Analysis Corporation
2242 W. Harrison, Suite 200, Chicago, Illinois 60612 Phone: (312) 733-0551 Fax: (312) 733-2386
e-mail address: STATinfo@STATAnalysis.com AIHA, NVLAP and NELAP accredited

CHAIN OF CUSTODY RECORD

Nº: 825418 Page: 1 of 1

Company: Terracon
Project Number: A2157000 Client Tracking No.:
Project Name: 650 W 83rd St.
Project Location: Chicago, IL
Sampler(s): Patrick W. Bradley
Report To: Rich O'Brien Phone:
Fax:
QC Level: 1 2 3 4 e-mail:

P.O. No.:
Quote No.:

Turn Around: Standard
Results Needed: / / am/pm

Client Sample Number/Description:	Date Taken	Time Taken	Matrix	Comp	Grab	Preserv.	No of Containers	TCLP LEAD	PNAs	SPLP Lead	SPLP Barium	SPLP Selenium	SPLP Aluminum	SPLP Cobalt	SPLP Nickel	SPLP Antimony	SPLP IRON	SPLP Arsenic	Remarks	Lab No.:
B-201 (4-5')	2-20-15	1045					1	X												001
B-202 (4-5')		1105						X												002
B-203 (4-6')		1005																	HOLD	003
B-203 (6-8')		1005						X												004
B-203 (8-10')		1005																	HOLD	005
B-204 (4-6')		1015						X												006
B-205 (4-6')		945						X												007
B-206 (4-6')		935						X												008
B-207 (6-8')		845							X											009
B-208 (6-8')		820							X											010
B-209 (6-8')		905							X											011
B-210 (6-8')		920																		012
B-211 (6-8')		1145								X									HOLD Pb	013
B-212 (1-3')		1235									X	X							Ba, Se	014
B-213 (1-3')		1215											X	X	X				Al, Co, Ni	015
B-213 (4-6)		1225														X	X		Sb, Fe	016
B-214 (1-3')		1345									X	X						X	As, Se	017

Relinquished by: (Signature) Date/Time: 2-20-15/1545
Received by: (Signature) Date/Time: 2/20/15 15:45
Relinquished by: (Signature) Date/Time:
Received by: (Signature) Date/Time
Relinquished by: (Signature) Date/Time
Received by: (Signature) Date/Time:

Comments: Please note that B-201 and B-202 samples were taken at 4-5' depth

Preservation Code: A = None B = HNO_3 C = NaOH
D = H_2SO_4 E = HCl F = 5035/EnCore G = Other

Laboratory Work Order No.: 15020474

Received on Ice: Yes [X] No [ ]
Temperature: 2.1 °C

STAT Analysis Corporation

Sample Receipt Checklist

Client Name TERRACON-NAPERVILLE

Date and Time Received: 2/20/2015 3:45:00 PM

Work Order Number 15020474

Received by: DO

Checklist completed by: Signature 2/20/15 Date

Reviewed by: Initials 2/26/15 Date

Matrix: Carrier name Client Delivered

Shipping container/cooler in good condition?	Yes ☑	No ☐	Not Present ☐
Custody seals intact on shippping container/cooler?	Yes ☐	No ☐	Not Present ☑
Custody seals intact on sample bottles?	Yes ☐	No ☐	Not Present ☑
Chain of custody present?	Yes ☑	No ☐	
Chain of custody signed when relinquished and received?	Yes ☑	No ☐	
Chain of custody agrees with sample labels/containers?	Yes ☑	No ☐	
Samples in proper container/bottle?	Yes ☑	No ☐	
Sample containers intact?	Yes ☑	No ☐	
Sufficient sample volume for indicated test?	Yes ☑	No ☐	
All samples received within holding time?	Yes ☑	No ☐	
Container or Temp Blank temperature in compliance?	Yes ☑	No ☐	Temperature 2.1 °C
Water - VOA vials have zero headspace?	No VOA vials submitted ☐	Yes ☐	No ☐
Water - Samples pH checked?	Yes ☐	No ☐	Checked by: _____
Water - Samples properly preserved?	Yes ☐	No ☐	pH Adjusted? _____

Any No response must be detailed in the comments section below.

Comments: _____

Client / Person contacted: _____ Date contacted: _____ Contacted by: _____

Response: _____

STAT Analysis Corporation
2242 West Harrison St., Suite 200, Chicago, IL 60612-3766
Tel: (312) 733-0551 Fax: (312) 733-2386 STATinfo@STATAnalysis.com
Accreditations: IEPA ELAP 100445; ORELAP IL300001; AIHA-LAP, LLC 101160; NVLAP LabCode 101202-0

March 05, 2015

Terracon Consultants, Inc.
135 Ambassador Drive
Naperville, IL 60540
Telephone: (630) 717-4263
Fax: (630) 357-9489

Analytical Report for STAT Work Order: 15020517 Revision 0

RE: A2157000, 650 W. 83rd St., Chicago, IL

Dear Richard O'Brien:

STAT Analysis received 1 sample for the referenced project on 2/20/2015 3:45:00 PM. The analytical results are presented in the following report.

All analyses were performed in accordance with the requirements of 35 IAC Part 186 / NELAC standards. Analyses were performed in accordance with methods as referenced on the analytical report. Those analytical results expressed on a dry weight basis are also noted on the analytical report.

All analyses were performed within established holding time criteria, and all Quality Control criteria met EPA or laboratory specifications except when noted in the Case Narrative or Analytical Report. If required, an estimate of uncertainty for the analyses can be provided. A listing of accredited methods/parameters can also be provided.

Thank you for the opportunity to serve you and I look forward to working with you in the future. If you have any questions regarding the enclosed materials, please contact me at (312) 733-0551.

Sincerely,

Frank Capoccia
Project Manager

The information contained in this report and any attachments is confidential information intended only for the use of the individual or entities named above. The results of this report relate only to the samples tested. If you have received this report in error, please notify us immediately by phone. This report shall not be reproduced, except in its entirety, unless written approval has been obtained from the laboratory. This analytical report shall become property of the Customer upon payment in full. Otherwise, STAT will be under no obligation to support, defend or discuss the analytical report.

STAT Analysis Corporation

Date: March 05, 2015

Client: Terracon Consultants, Inc.
Project: A2157000, 650 W. 83rd St., Chicago, IL
Work Order: 15020517 Revision 0

Work Order Sample Summary

Lab Sample ID	Client Sample ID	Tag Number	Collection Date	Date Received
15020517-001A	WC		2/20/2015 8:40:00 AM	2/20/2015

CLIENT: Terracon Consultants, Inc.
Project: A2157000, 650 W. 83rd St., Chicago, IL
Work Order: 15020517 Revision 0

CASE NARRATIVE

The following parameters apply to sample number WC (15020517-001):
Reactivity with Water: None
Reactivity with Base: None
Reactivity with Acid: Sample effervesced with no temperature change
Odor: Slight
Physical Description: Black and brown concrete

Sample -WC- (15020517-001) had the following VOC surrogates outside of control limits:
Toluene-d8: 82% Recovery (QC Limits 85-110%)
4-Bromofluorobenzene: 60% Recovery (QC Limits 63-110%)
Recovery for all other surrogates were within control limits.

The VOC soil Laboratory Control Sample/Laboratory Control Sample Duplicate (LCS/LCSD) analyzed 03/02/2015 had recovery of the following compounds outside of control limits:
Bromomethane: 65% (LCS) recovery (QC limits 70-130%)
1,1-Dichloroethene: 69% (LCS) recovery (QC limits 70-130%)
Chloromethane: 22% RPD (QC limits <20%)

Methylene chloride present in the sample WC (15020517-001) is a possible lab artifact.

STAT Analysis Corporation
2242 West Harrison St., Suite 200, Chicago, IL 60612-3766
Tel: (312) 733-0551 Fax: (312) 733-2386 STATinfo@STATAnalysis.com
Accreditations:IEPA ELAP 100445;ORELAP IL300001;AIHA-LAP, LLC 101160;NVLAP LabCode 101202-0

Date Reported: March 05, 2015
Date Printed: March 05, 2015

ANALYTICAL RESULTS

Client: Terracon Consultants, Inc.
Work Order: 15020517 Revision 0
Project: A2157000, 650 W. 83rd St., Chicago, IL
Lab ID: 15020517-001

Client Sample ID: WC
Collection Date 2/20/2015 8:40:00 AM
Matrix: Soil

Analyses	Result	RL	Qualifier	Units	DF	Date Analyzed
PCBs		**SW8082 (SW3550B)**		Prep Date: **2/25/2015**		Analyst: **GVC**
Aroclor 1016	ND	0.094		mg/Kg-dry	1	2/25/2015
Aroclor 1221	ND	0.094		mg/Kg-dry	1	2/25/2015
Aroclor 1232	ND	0.094		mg/Kg-dry	1	2/25/2015
Aroclor 1242	ND	0.094		mg/Kg-dry	1	2/25/2015
Aroclor 1248	ND	0.094		mg/Kg-dry	1	2/25/2015
Aroclor 1254	ND	0.094		mg/Kg-dry	1	2/25/2015
Aroclor 1260	ND	0.094		mg/Kg-dry	1	2/25/2015
TCLP Mercury		**SW1311/7470A**		Prep Date: **2/24/2015**		Analyst: **LB**
Mercury	ND	0.00020		mg/L	1	2/25/2015
TCLP Metals by ICP/MS		**SW1311/6020 (SW3005A)**		Prep Date: **2/23/2015**		Analyst: **JG**
Arsenic	ND	0.010		mg/L	5	2/24/2015
Barium	0.96	0.050		mg/L	5	2/24/2015
Cadmium	ND	0.0050		mg/L	5	2/24/2015
Chromium	ND	0.010		mg/L	5	2/24/2015
Copper	ND	0.10		mg/L	5	2/24/2015
Lead	0.010	0.0050		mg/L	5	2/24/2015
Nickel	0.033	0.020		mg/L	5	2/24/2015
Selenium	ND	0.010		mg/L	5	2/24/2015
Silver	ND	0.010		mg/L	5	2/24/2015
Zinc	0.075	0.050		mg/L	5	2/24/2015
F-Listed Semivolatile Compounds		**SW8270C (SW3550B)**		Prep Date: **2/23/2015**		Analyst: **DM**
2-Ethoxyethanol	ND	0.40	*	mg/Kg-dry	1	2/24/2015
2-Methylphenol	ND	0.40		mg/Kg-dry	1	2/24/2015
3- & 4-Methylphenol	ND	0.40		mg/Kg-dry	1	2/24/2015
Cyclohexanone	ND	0.40	*	mg/Kg-dry	1	2/24/2015
Nitrobenzene	ND	0.40		mg/Kg-dry	1	2/24/2015
Pyridine	ND	0.40		mg/Kg-dry	1	2/24/2015
Semivolatile Organic Compounds by GC/MS		**SW8270C (SW3550B)**		Prep Date: **2/23/2015**		Analyst: **DM**
Acenaphthene	0.13	0.040		mg/Kg-dry	1	2/24/2015
Acenaphthylene	1.2	0.040		mg/Kg-dry	1	2/24/2015
Anthracene	1.2	0.040		mg/Kg-dry	1	2/24/2015
Benz(a)anthracene	3.8	0.040		mg/Kg-dry	1	2/24/2015
Benzo(a)pyrene	3.7	0.040		mg/Kg-dry	1	2/24/2015
Benzo(b)fluoranthene	2.2	0.040		mg/Kg-dry	1	2/24/2015
Benzo(g,h,i)perylene	1.8	0.040		mg/Kg-dry	1	2/24/2015
Benzo(k)fluoranthene	3.2	0.040		mg/Kg-dry	1	2/24/2015

Qualifiers:
ND - Not Detected at the Reporting Limit
J - Analyte detected below quanititation limits
B - Analyte detected in the associated Method Blank
HT - Sample received past holding time
* - Non-accredited parameter
RL - Reporting / Quantitation Limit for the analysis
S - Spike Recovery outside accepted recovery limits
R - RPD outside accepted recovery limits
E - Value above quantitation range
H - Holding time exceeded

STAT Analysis Corporation
2242 West Harrison St., Suite 200, Chicago, IL 60612-3766
Tel: (312) 733-0551 Fax: (312) 733-2386 STATinfo@STATAnalysis.com
Accreditations:IEPA ELAP 100445;ORELAP IL300001;AIHA-LAP, LLC 101160;NVLAP LabCode 101202-0

Date Reported: March 05, 2015
Date Printed: March 05, 2015

ANALYTICAL RESULTS

Client: Terracon Consultants, Inc.
Work Order: 15020517 Revision 0
Project: A2157000, 650 W. 83rd St., Chicago, IL
Lab ID: 15020517-001

Client Sample ID: WC
Collection Date 2/20/2015 8:40:00 AM
Matrix: Soil

Analyses	Result	RL	Qualifier	Units	DF	Date Analyzed
Semivolatile Organic Compounds by GC/MS	**SW8270C (SW3550B)**			Prep Date: **2/23/2015**		Analyst: **DM**
Bis(2-chloroethyl)ether	ND	0.21		mg/Kg-dry	1	2/24/2015
Bis(2-ethylhexyl)phthalate	ND	1.0		mg/Kg-dry	1	2/24/2015
Chrysene	3.5	0.040		mg/Kg-dry	1	2/24/2015
Dibenz(a,h)anthracene	0.92	0.040		mg/Kg-dry	1	2/24/2015
1,2-Dichlorobenzene	ND	0.21		mg/Kg-dry	1	2/24/2015
1,4-Dichlorobenzene	ND	0.21		mg/Kg-dry	1	2/24/2015
Fluoranthene	3.9	0.040		mg/Kg-dry	1	2/24/2015
Fluorene	0.20	0.040		mg/Kg-dry	1	2/24/2015
Hexachlorocyclopentadiene	ND	0.21		mg/Kg-dry	1	2/24/2015
Indeno(1,2,3-cd)pyrene	1.4	0.040		mg/Kg-dry	1	2/24/2015
Naphthalene	0.14	0.040		mg/Kg-dry	1	2/24/2015
N-Nitrosodi-n-propylamine	ND	0.040		mg/Kg-dry	1	2/24/2015
N-Nitrosodiphenylamine	ND	0.040		mg/Kg-dry	1	2/24/2015
Phenanthrene	1.3	0.040		mg/Kg-dry	1	2/24/2015
Pyrene	6.4	0.20		mg/Kg-dry	5	2/25/2015
1,2,4-Trichlorobenzene	ND	0.21		mg/Kg-dry	1	2/24/2015
TCLP Semivolatile Organic Compounds	**SW1311/8270C (SW3510C)**			Prep Date: **2/25/2015**		Analyst: **DM**
1,4-Dichlorobenzene	ND	0.010		mg/L	1	2/25/2015
2,4-Dinitrotoluene	ND	0.010		mg/L	1	2/25/2015
Hexachlorobenzene	ND	0.010		mg/L	1	2/25/2015
Hexachlorobutadiene	ND	0.010		mg/L	1	2/25/2015
Hexachloroethane	ND	0.010		mg/L	1	2/25/2015
Nitrobenzene	ND	0.010		mg/L	1	2/25/2015
2-methylphenol	ND	0.010		mg/L	1	2/25/2015
3- & 4-Methylphenol	ND	0.010		mg/L	1	2/25/2015
Pentachlorophenol	ND	0.050		mg/L	1	2/25/2015
Pyridine	ND	0.010		mg/L	1	2/25/2015
2,4,5-Trichlorophenol	ND	0.010		mg/L	1	2/25/2015
2,4,6-Trichlorophenol	ND	0.010		mg/L	1	2/25/2015
F-Listed Volatile Compounds	**SW8260B**			Prep Date: **2/27/2015**		Analyst: **ART**
1,1,1-Trichloroethane	ND	0.0064		mg/Kg-dry	1	3/2/2015
1,1,2-Trichloroethane	ND	0.0064		mg/Kg-dry	1	3/2/2015
1,2-Dichlorobenzene	ND	0.0064		mg/Kg-dry	1	3/2/2015
1-Butanol	ND	0.51		mg/Kg-dry	1	3/2/2015
2-Butanone	ND	0.096		mg/Kg-dry	1	3/2/2015
2-Nitropropane	ND	0.064		mg/Kg-dry	1	3/2/2015
4-Methyl-2-pentanone	ND	0.013		mg/Kg-dry	1	3/2/2015

Qualifiers:
ND - Not Detected at the Reporting Limit
J - Analyte detected below quanititation limits
B - Analyte detected in the associated Method Blank
HT - Sample received past holding time
* - Non-accredited parameter
RL - Reporting / Quantitation Limit for the analysis
S - Spike Recovery outside accepted recovery limits
R - RPD outside accepted recovery limits
E - Value above quantitation range
H - Holding time exceeded

STAT Analysis Corporation
2242 West Harrison St., Suite 200, Chicago, IL 60612-3766
Tel: (312) 733-0551 Fax: (312) 733-2386 STATinfo@STATAnalysis.com
Accreditations:IEPA ELAP 100445;ORELAP IL300001;AIHA-LAP, LLC 101160;NVLAP LabCode 101202-0

Date Reported: March 05, 2015
Date Printed: March 05, 2015

ANALYTICAL RESULTS

Client: Terracon Consultants, Inc.
Work Order: 15020517 Revision 0
Project: A2157000, 650 W. 83rd St., Chicago, IL
Lab ID: 15020517-001

Client Sample ID: WC
Collection Date 2/20/2015 8:40:00 AM
Matrix: Soil

Analyses	Result	RL	Qualifier	Units	DF	Date Analyzed
F-Listed Volatile Compounds	**SW8260B**			Prep Date: **2/27/2015**		Analyst: **ART**
Acetone	ND	0.096		mg/Kg-dry	1	3/2/2015
Benzene	ND	0.0064		mg/Kg-dry	1	3/2/2015
Carbon disulfide	ND	0.0064		mg/Kg-dry	1	3/2/2015
Carbon tetrachloride	ND	0.0064		mg/Kg-dry	1	3/2/2015
Chlorobenzene	ND	0.0064		mg/Kg-dry	1	3/2/2015
Ethyl acetate	ND	0.064		mg/Kg-dry	1	3/2/2015
Ethyl Ether	ND	0.064		mg/Kg-dry	1	3/2/2015
Ethylbenzene	ND	0.0064		mg/Kg-dry	1	3/2/2015
Freon-113	ND	0.0064	*	mg/Kg-dry	1	3/2/2015
Isobutyl Alcohol	ND	0.51		mg/Kg-dry	1	3/2/2015
Methanol	ND	1.3	*	mg/Kg-dry	1	3/4/2015
Methylene chloride	0.26	0.013		mg/Kg-dry	1	3/2/2015
Tetrachloroethene	ND	0.0064		mg/Kg-dry	1	3/2/2015
Toluene	ND	0.0064		mg/Kg-dry	1	3/2/2015
Trichloroethene	ND	0.0064		mg/Kg-dry	1	3/2/2015
Trichlorofluoromethane	ND	0.0064		mg/Kg-dry	1	3/2/2015
Xylenes, Total	ND	0.019		mg/Kg-dry	1	3/2/2015
Volatile Organic Compounds by GC/MS	**SW8260B**			Prep Date: **2/27/2015**		Analyst: **ART**
1,1,1-Trichloroethane	ND	0.0064		mg/Kg-dry	1	3/2/2015
1,1,2-Trichloroethane	ND	0.0064		mg/Kg-dry	1	3/2/2015
1,1-Dichloroethane	ND	0.0064		mg/Kg-dry	1	3/2/2015
1,1-Dichloroethene	ND	0.0064		mg/Kg-dry	1	3/2/2015
1,2-Dichloroethane	ND	0.0064		mg/Kg-dry	1	3/2/2015
1,2-Dichloropropane	ND	0.0064		mg/Kg-dry	1	3/2/2015
Benzene	ND	0.0064		mg/Kg-dry	1	3/2/2015
Bromodichloromethane	ND	0.0064		mg/Kg-dry	1	3/2/2015
Bromoform	ND	0.0064		mg/Kg-dry	1	3/2/2015
Carbon tetrachloride	ND	0.0064		mg/Kg-dry	1	3/2/2015
Chlorobenzene	ND	0.0064		mg/Kg-dry	1	3/2/2015
Chloroform	ND	0.0064		mg/Kg-dry	1	3/2/2015
cis-1,2-Dichloroethene	ND	0.0064		mg/Kg-dry	1	3/2/2015
cis-1,3-Dichloropropene	ND	0.0025		mg/Kg-dry	1	3/2/2015
Ethylbenzene	ND	0.0064		mg/Kg-dry	1	3/2/2015
Methylene chloride	0.26	0.013		mg/Kg-dry	1	3/2/2015
Styrene	ND	0.0064		mg/Kg-dry	1	3/2/2015
Tetrachloroethene	ND	0.0064		mg/Kg-dry	1	3/2/2015
Toluene	ND	0.0064		mg/Kg-dry	1	3/2/2015
trans-1,2-Dichloroethene	ND	0.0064		mg/Kg-dry	1	3/2/2015

Qualifiers:
ND - Not Detected at the Reporting Limit
J - Analyte detected below quanititation limits
B - Analyte detected in the associated Method Blank
HT - Sample received past holding time
* - Non-accredited parameter
RL - Reporting / Quantitation Limit for the analysis
S - Spike Recovery outside accepted recovery limits
R - RPD outside accepted recovery limits
E - Value above quantitation range
H - Holding time exceeded

STAT Analysis Corporation
2242 West Harrison St., Suite 200, Chicago, IL 60612-3766
Tel: (312) 733-0551 Fax: (312) 733-2386 STATinfo@STATAnalysis.com
Accreditations:IEPA ELAP 100445;ORELAP IL300001;AIHA-LAP, LLC 101160;NVLAP LabCode 101202-0

Date Reported: March 05, 2015
Date Printed: March 05, 2015

ANALYTICAL RESULTS

Client: Terracon Consultants, Inc.
Work Order: 15020517 Revision 0
Project: A2157000, 650 W. 83rd St., Chicago, IL
Lab ID: 15020517-001

Client Sample ID: WC
Collection Date 2/20/2015 8:40:00 AM
Matrix: Soil

Analyses	Result	RL	Qualifier	Units	DF	Date Analyzed
Volatile Organic Compounds by GC/MS	**SW8260B**			Prep Date: **2/27/2015**		Analyst: **ART**
trans-1,3-Dichloropropene	ND	0.0025		mg/Kg-dry	1	3/2/2015
Trichloroethene	ND	0.0064		mg/Kg-dry	1	3/2/2015
Vinyl chloride	ND	0.0064		mg/Kg-dry	1	3/2/2015
Xylenes, Total	ND	0.019		mg/Kg-dry	1	3/2/2015
TCLP Volatile Organic Compounds by GC/MS	**SW1311/8260B (SW5030B)**			Prep Date: **2/20/2015**		Analyst: **ERP**
Benzene	ND	0.050		mg/L	10	3/2/2015
2-Butanone	ND	0.20		mg/L	10	3/2/2015
Carbon tetrachloride	ND	0.050		mg/L	10	3/2/2015
Chlorobenzene	ND	0.050		mg/L	10	3/2/2015
Chloroform	ND	0.050		mg/L	10	3/2/2015
1,2-Dichloroethane	ND	0.050		mg/L	10	3/2/2015
1,1-Dichloroethene	ND	0.050		mg/L	10	3/2/2015
Tetrachloroethene	ND	0.050		mg/L	10	3/2/2015
Trichloroethene	ND	0.050		mg/L	10	3/2/2015
Vinyl chloride	ND	0.050		mg/L	10	3/2/2015
Ash Content	**E160.4**			Prep Date: **2/24/2015**		Analyst: **RW**
Ash Content	95.4	0.01	*	wt%	1	2/25/2015
Cyanide, Reactive	**SW7.3.3.2**			Prep Date: **2/23/2015**		Analyst: **YZ**
Reactive Cyanide	ND	1.0		mg/Kg	1	2/23/2015
Flash Point (Open-Cup)	**SW1010(M)**			Prep Date: **2/20/2015**		Analyst: **RW**
Flashpoint	No flash up to 212		*	°F	1	2/20/2015
Paint Filter	**SW9095A**			Prep Date: **2/20/2015**		Analyst: **RW**
Paint Filter	Pass			Pass/Fail	1	2/20/2015
pH (25 °C)	**SW9045C**			Prep Date: **2/24/2015**		Analyst: **RW**
pH	9.8			pH Units	1	2/24/2015
Phenolics	**SW9066 (SW9065)**			Prep Date: **2/26/2015**		Analyst: **YZ**
Phenolics, Total Recoverable	1.3	0.30		mg/Kg-dry	1	2/26/2015
Percent Moisture	**D2974**			Prep Date: **2/24/2015**		Analyst: **RW**
Percent Moisture	17.2	0.2	*	wt%	1	2/25/2015
Solids, Total	**D2974**			Prep Date: **2/24/2015**		Analyst: **RW**
Total Solid	82.8	0.20	*	wt%	1	2/25/2015
Sulfide, Reactive	**SW7.3.4.2**			Prep Date: **2/23/2015**		Analyst: **YZ**
Reactive Sulfide	ND	10		mg/Kg	1	2/23/2015

Qualifiers:
ND - Not Detected at the Reporting Limit
J - Analyte detected below quanititation limits
B - Analyte detected in the associated Method Blank
HT - Sample received past holding time
* - Non-accredited parameter
RL - Reporting / Quantitation Limit for the analysis
S - Spike Recovery outside accepted recovery limits
R - RPD outside accepted recovery limits
E - Value above quantitation range
H - Holding time exceeded

STAT Analysis Corporation
2242 W. Harrison Suite 200, Chicago, Illinois 60612 Phone: (312) 733-0551 Fax: (312) 733-2386
e-mail address: STATinfo@STATAnalysis.com AIHA, NVLAP and NELAP accredited

CHAIN OF CUSTODY RECORD

Nº: 858601 Page : of

Company: Terracon
Project Number: A2157000 Client Tracking No.:
Project Name: 650 W. 83rd St
Project Location: ↓ Chicago, IL
Sampler(s): Patrick W. Bradley
Report To: Rich O'Brien Phone:
Fax:
QC Level: 1 2 3 4 e-mail:

P.O. No.:
Quote No.:

Turn Around: Standard
Results Needed: / / am/pm

Client Sample Number/Description:	Date Taken	Time Taken	Matrix	Comp.	Grab	Preserv.	No. of Containers	Waste Characterization	Remarks	Lab No.:
WC	2-20-15	840	S				1	X	001	858601

Relinquished by: (Signature) Date/Time: 2-20-15 1545
Received by: (Signature) Date/Time: 2/20/15 15:15
Relinquished by: (Signature) Date/Time:
Received by: (Signature) Date/Time:
Relinquished by: (Signature) Date/Time:
Received by: (Signature) Date/Time:

Comments:

Preservation Code: A = None B = HNO_3 C = NaOH
D = H_2SO_4 E = HCl F = 5035/EnCore G = Other

Laboratory Work Order No.: 1502057 1502074

Received on Ice: Yes ☒ No ☐
Temperature: 2-1 °C

STAT Analysis Corporation

Sample Receipt Checklist

Client Name: TERRACON-NAPERVILLE

Date and Time Received: 2/20/2015 3:45:00 PM

Work Order Number 15020517

Received by: DO

Checklist completed by: [signature] 2/20/15 (Signature, Date)

Reviewed by: [initials] 2/26/15 (Initials, Date)

Matrix:

Carrier name: Client Delivered

Shipping container/cooler in good condition?	Yes ☑	No ☐	Not Present ☐
Custody seals intact on shippping container/cooler?	Yes ☐	No ☐	Not Present ☑
Custody seals intact on sample bottles?	Yes ☐	No ☐	Not Present ☑
Chain of custody present?	Yes ☑	No ☐	
Chain of custody signed when relinquished and received?	Yes ☑	No ☐	
Chain of custody agrees with sample labels/containers?	Yes ☑	No ☐	
Samples in proper container/bottle?	Yes ☑	No ☐	
Sample containers intact?	Yes ☑	No ☐	
Sufficient sample volume for indicated test?	Yes ☑	No ☐	
All samples received within holding time?	Yes ☑	No ☐	
Container or Temp Blank temperature in compliance?	Yes ☑	No ☐	Temperature 2.1 °C
Water - VOA vials have zero headspace?	No VOA vials submitted ☐	Yes ☐	No ☐
Water - Samples pH checked?	Yes ☐	No ☐	Checked by:
Water - Samples properly preserved?	Yes ☐	No ☐	pH Adjusted?

Any No response must be detailed in the comments section below.

Comments:

Client / Person contacted: Date contacted: Contacted by:

Response:

STATE OF ILLINOIS

ENVIRONMENTAL PROTECTION AGENCY
NELAP - RECOGNIZED
ENVIRONMENTAL LABORATORY ACCREDITATION

is hereby granted to

STAT ANALYSIS CORPORATION

2242 WEST HARRISON STREET

CHICAGO, IL 60612

NELAP ACCREDITED

ACCREDITATION NUMBER #100445

According to the Illinois Administrative Code, Title 35, Subtitle A, Chapter II, Part 186, ACCREDITATION OF LABORATORIES FOR DRINKING WATER, WASTEWATER AND HAZARDOUS WASTES ANALYSIS, the State of Illinois formally recognizes that this laboratory is technically competent to perform the environmental analyses listed on the scope of accreditation detailed below.

The laboratory agrees to perform all analyses listed on this scope of accreditation according to the Part 186 requirements and acknowledges that continued accreditation is dependent on successful ongoing compliance with the applicable requirements of Part 186. Please contact the Illinois EPA Environmental Laboratory Accreditation Program (IL ELAP) to verify the laboratory's scope of accreditation and accreditation status. Accreditation by the State of Illinois is not an endorsement or a guarantee of validity of the data generated by the laboratory.

Celeste M. Crowley
Acting Manager
Environmental Laboratory Accreditation Program

John South
Accreditation Officer
Environmental Laboratory Accreditation Program

Certificate No.: 003468
Expiration Date: 09/30/2015
Issued On: 09/18/2014

State of Illinois
Environmental Protection Agency

Certificate No.: 003468

Awards the Certificate of Approval to:

STAT Analysis Corporation
2242 West Harrison Street
Chicago, IL 60612

According to the Illinois Administrative Code, Title 35, Subtitle A, Chapter II, Part 186, ACCREDITATION OF LABORATORIES FOR DRINKING WATER, WASTEWATER AND HAZARDOUS WASTES ANALYSIS, the State of Illinois formally recognizes that this laboratory is technically competent to perform the environmental analyses listed on the scope of accreditation detailed below.

The laboratory agrees to perform all analyses listed on this scope of accreditation according to the Part 186 requirements and acknowledges that continued accreditation is dependent on successful ongoing compliance with the applicable requirements of Part 186. Please contact the Illinois Environmental Laboratory Accreditation Program (IL ELAP) to verify the laboratory's scope of accreditation and accreditation status. Accreditatio the State of Illinois is not an endorsement or a guarantee of validity of the data generated by the laboratory.

FOT Name: Non Potable Water, Inorganic

Method: SM2310B,1997

Matrix Type: NPW

Acidity

Method: SM2320B,1997

Matrix Type: NPW

Alkalinity

Method: SM2340B,1997

Matrix Type: NPW

Hardness

Method: SM2510B,1997

Matrix Type: NPW

Specific Conductance

Method: SM2540B,1997

Matrix Type: NPW

Residue (Total)

Method: SM2540C,1997

Matrix Type: NPW

Residue (TDS)

Method: SM2540D,1997

Matrix Type: NPW

Residue (TSS)

Method: SM2540E,1997

Matrix Type: NPW/SCM

Residue (% Volatile)

Method: SM2540F,1997

Matrix Type: NPW

Residue (settleable)

Method: SM3500Cr-B,2009

Matrix Type: NPW/SCM

STAT Analysis Corporation
2242 West Harrison Street
Chicago, IL 60612

FOT Name: Non Potable Water, Inorganic

Matrix Type: NPW/SCM

Method: SM4500CL-C,1997

Matrix Type: NPW

Chloride

Method: SM4500Cl-G,2000

Matrix Type: NPW

Chlorine, Total Residual

Method: SM4500CN-E,1999

Matrix Type: NPW

Cyanide

Method: SM4500H-B,2000

Matrix Type: NPW

Hydrogen Ion (pH)

Method: SM4500NH3-C,1997

Matrix Type: NPW

Ammonia

Method: SM4500NO3-F,2000

Matrix Type: NPW/SCM

Nitrate

Method: SM4500P-E,1999

Matrix Type: NPW

Orthophosphate (as P)

Method: SM5210B,2001

Matrix Type: NPW/SCM

Biochemical Oxygen Demand (BOD)

Method: USEPA120.1,1982

Matrix Type: NPW/SCM

Specific Conductance

Method: USEPA150.2,1982

Matrix Type: NPW/SCM

Hydrogen Ion (pH)

Method: USEPA1664A

Matrix Type: NPW/SCM

Oil and Grease

Method: SM3500Cr-B,2009

Chromium VI

Nitrate-nitrite (as N)

Phosphorus

Carbonaceous Biochemical Oxygen Demand (CBOI

State of Illinois
Environmental Protection Agency

Certificate No.: 003468

Awards the Certificate of Approval

STAT Analysis Corporation
2242 West Harrison Street
Chicago, IL 60612

FOT Name: Non Potable Water, Inorganic

Method: USEPA200.8,1994

Matrix Type: NPW/SCM

Aluminum	Antimony
Arsenic	Barium
Beryllium	Boron
Cadmium	Chromium
Cobalt	Copper
Iron	Lead
Manganese	Molybdenum
Nickel	Selenium
Silver	Thallium
Tin	Vanadium
Zinc	

Method: USEPA245.1R3.0,1994

Matrix Type: NPW/SCM

Mercury

Method: USEPA410.4R2.0,1993

Matrix Type: NPW/SCM

Chemical Oxygen Demand (COD)

Method: USEPA420.4R1.0,1993

Matrix Type: NPW/SCM

Phenolics

FOT Name: Non Potable Water, Organic

Method: USEPA608

Matrix Type: NPW/SCM

4,4'-DDD	4,4'-DDE
4,4'-DDT	Aldrin
alpha-BHC	beta-BHC
Chlordane	delta-BHC
Dieldrin	Endosulfan I
Endosulfan II	Endosulfan sulfate
Endrin	Endrin aldehyde
gamma-BHC (Lindane)	Heptachlor
Heptachlor epoxide	Methoxychlor
PCB-1016	PCB-1221

State of Illinois
Environmental Protection Agency

Certificate No.: 003468

Awards the Certificate of Approval

STAT Analysis Corporation
2242 West Harrison Street
Chicago, IL 60612

FOT Name: Non Potable Water, Organic

Method: USEPA608

Matrix Type: NPW/SCM

PCB-1232
PCB-1242
PCB-1248
PCB-1254
PCB-1260
Toxaphene

Method: USEPA624

Matrix Type: NPW/SCM

1,1,1-Trichloroethane
1,1,2,2-Tetrachloroethane
1,1,2-Trichloroethane
1,1-Dichloroethane
1,1-Dichloroethene
1,2-Dichlorobenzene
1,2-Dichloroethane
1,2-Dichloropropane
1,3-Dichlorobenzene
1,4-Dichlorobenzene
2-Chloroethylvinyl ether
Acrolein (Propenal)
Acrylonitrile
Benzene
Bromodichloromethane
Bromoform
Bromomethane
Carbon tetrachloride
Chlorobenzene
Chloroethane
Chloroform
Chloromethane
cis-1,3-Dichloropropene
Dibromochloromethane
Dichloromethane (Methylene chloride)
Ethylbenzene
Methyl tert-butyl ether (MTBE)
Tetrachloroethene
Toluene
trans-1,2-Dichloroethene
trans-1,3-Dichloropropene
Trichloroethene
Trichlorofluoromethane
Vinyl chloride
Xylenes (total)

Method: USEPA625

Matrix Type: NPW/SCM

1,2,4-Trichlorobenzene
1,2-Dichlorobenzene
1,3-Dichlorobenzene
1,4-Dichlorobenzene
2,4,5-Trichlorophenol
2,4,6-Trichlorophenol
2,4-Dichlorophenol
2,4-Dimethylphenol
2,4-Dinitrophenol
2,4-Dinitrotoluene (2,4-DNT)
2,6-Dinitrotoluene (2,6-DNT)
2-Chloronaphthalene
2-Chlorophenol
2-Methyl-4,6-dinitrophenol
2-Nitrophenol
3,3'-Dichlorobenzidine

STAT Analysis Corporation
2242 West Harrison Street
Chicago, IL 60612

FOT Name: Non Potable Water, Organic

Method: USEPA625

Matrix Type: NPW/SCM

4-Chloro-3-methylphenol	4-Bromophenyl phenyl ether
4-Nitrophenol	4-Chlorophenyl phenyl ether
Acenaphthylene	Acenaphthene
Benzidine	Anthracene
Benzo(a)pyrene	Benzo(a)anthracene
Benzo(g,h,i)perylene	Benzo(b)fluoranthene
Benzyl butyl phthalate	Benzo(k)fluoranthene
Bis(2-chloroethyl) ether	Bis(2-chloroethoxy) methane
Chrysene	Bis(2-ethylhexyl) phthalate
Diethyl phthalate	Dibenz(a,h)anthracene
Di-n-butyl phthalate	Dimethyl phthalate
Fluoranthene	Di-n-octyl phthalate
Hexachlorobenzene	Fluorene
Hexachlorocyclopentadiene	Hexachlorobutadiene
Indeno(1,2,3-cd) pyrene	Hexachloroethane
Naphthalene	Isophorone
N-Nitrosodimethylamine	Nitrobenzene
N-Nitrosodiphenylamine	N-Nitrosodi-n-propylamine
Phenanthrene	Pentachlorophenol
Pyrene	Phenol

FOT Name: Solid and Chemical Materials, Inorganic

Method: 1010A

Matrix Type: NPW/SCM

Ignitability

Method: 1311

Matrix Type: NPW/SCM

TCLP (Organic and Inorganic)

Method: 1312

Matrix Type: NPW/SCM

Synthetic Precipitation Leaching Procedure

Method: 6020A

Matrix Type: NPW/SCM

Aluminum	Antimony

STAT Analysis Corporation
2242 West Harrison Street
Chicago, IL 60612

FOT Name: Solid and Chemical Materials, Inorganic

Matrix Type: NPW/SCM

Barium
Boron
Calcium
Cobalt
Iron
Magnesium
Molybdenum
Potassium
Silver
Thallium
Zinc

Method: 6020A

Arsenic
Beryllium
Cadmium
Chromium
Copper
Lead
Manganese
Nickel
Selenium
Sodium
Vanadium

Method: 7000B

Matrix Type: NPW/SCM

Lead

Method: 7196A

Matrix Type: NPW/SCM

Chromium VI

Method: 7470A

Matrix Type: NPW

Mercury

Method: 7471B

Matrix Type: NPW/SCM

Mercury

Method: 9012A

Matrix Type: NPW/SCM

Cyanide

Method: 9020B

Matrix Type: NPW/SCM

TOX (Total Organic Halides)

Method: 9023

Matrix Type: NPW/SCM

EOX-Extractable Organic Halides

Method: 9040B

STAT Analysis Corporation
2242 West Harrison Street
Chicago, IL 60612

FOT Name: Solid and Chemical Materials, Inorganic — **Method: 9040B**

Matrix Type: NPW

Hydrogen Ion (pH)

Method: 9040C

Matrix Type: NPW

Hydrogen Ion (pH)

Method: 9045C

Matrix Type: NPW/SCM

Hydrogen Ion (pH)

Method: 9045D

Matrix Type: NPW/SCM

Hydrogen Ion (pH)

Method: 9066

Matrix Type: NPW/SCM

Phenolics

Method: 9071B

Matrix Type: NPW/SCM

Oil and Grease Extractable

Method: 9095A

Matrix Type: NPW/SCM

Paint Filter

Method: 9095B

Matrix Type: NPW/SCM

Paint Filter

FOT Name: Solid and Chemical Materials, Organic

Method: 8015B

Matrix Type: NPW/SCM

Diesel range organics (DRO) — Ethylene glycol

Gasoline range organics (GRO)

Method: 8015C

Matrix Type: NPW/SCM

Diesel range organics (DRO) — Gasoline range organics (GRO)

Method: 8081A

Matrix Type: NPW/SCM

4,4'-DDD — 4,4'-DDE

STAT Analysis Corporation
2242 West Harrison Street
Chicago, IL 60612

FOT Name: Solid and Chemical Materials, Organic

Matrix Type: NPW/SCM

Method: 8081A

- Aldrin
- alpha-Chlordane
- Chlordane - not otherwise specified
- Dieldrin
- Endosulfan II
- Endrin
- Endrin ketone
- gamma-Chlordane
- Heptachlor epoxide
- Toxaphene
- 4,4'-DDT
- alpha-BHC
- beta-BHC
- delta-BHC
- Endosulfan I
- Endosulfan sulfate
- Endrin aldehyde
- gamma-BHC (Lindane)
- Heptachlor
- Methoxychlor

Method: 8081B

Matrix Type: NPW/SCM

- 4,4'-DDD
- 4,4'-DDT
- alpha-BHC
- beta-BHC
- delta-BHC
- Endosulfan I
- Endosulfan sulfate
- Endrin aldehyde
- gamma-BHC (Lindane)
- Heptachlor
- Methoxychlor
- 4,4'-DDE
- Aldrin
- alpha-Chlordane
- Chlordane - not otherwise specified
- Dieldrin
- Endosulfan II
- Endrin
- Endrin ketone
- gamma-Chlordane
- Heptachlor epoxide
- Toxaphene

Method: 8082

Matrix Type: NPW/SCM

- PCB-1016
- PCB-1232
- PCB-1248
- PCB-1260
- PCB-1221
- PCB-1242
- PCB-1254

Method: 8082A

Matrix Type: NPW/SCM

- PCB-1016
- PCB-1232
- PCB-1221
- PCB-1242

STAT Analysis Corporation
2242 West Harrison Street
Chicago, IL 60612

FOT Name: Solid and Chemical Materials, Organic — **Method: 8082A**

Matrix Type: NPW/SCM

PCB-1254 — PCB-1248 — PCB-1260

Method: 8260B

Matrix Type: NPW/SCM

1,1,1,2-Tetrachloroethane	1,1,1-Trichloroethane
1,1,2,2-Tetrachloroethane	1,1,2-Trichloroethane
1,1-Dichloroethane	1,1-Dichloroethene
1,1-Dichloropropene	1,2,3-Trichlorobenzene
1,2,3-Trichloropropane	1,2,4-Trichlorobenzene
1,2,4-Trimethylbenzene	1,2-Dibromo-3-chloropropane (DBCP)
1,2-Dibromoethane (EDB)	1,2-Dichlorobenzene
1,2-Dichloroethane	1,2-Dichloropropane
1,3,5-Trimethylbenzene	1,3-Dichlorobenzene
1,3-Dichloropropane	1,4-Dichlorobenzene
1,4-Dioxane	2,2-Dichloropropane
2-Butanone (Methyl ethyl ketone, MEK)	2-Chloroethyl vinyl ether
2-Chlorotoluene	2-Hexanone
2-Methyl-1-propanol (Isobutyl alcohol)	2-Nitropropane
4-Chlorotoluene	4-Methyl-2-pentanone (Methyl isobutyl ketone, MIBI
Acetone	Acrolein (Propenal)
Acrylonitrile	Benzene
Bromobenzene	Bromochloromethane
Bromodichloromethane	Bromoform
Bromomethane	Carbon disulfide
Carbon tetrachloride	Chlorobenzene
Chlorodibromomethane (Dibromochloromethane)	Chloroethane
Chloroform	Chloromethane
cis-1,2-Dichloroethene	cis-1,3-Dichloropropene
Dibromomethane	Dichlorodifluoromethane
Dichloromethane (Methylene chloride)	Diethyl ether
Ethyl acetate	Ethyl ether
Ethylbenzene	Isopropylbenzene
Methyl ethyl ketone	Methyl isobutyl ketone
Methyl-t-butyl ether	m-Xylene
Naphthalene	n-Butanol

STAT Analysis Corporation
2242 West Harrison Street
Chicago, IL 60612

FOT Name: Solid and Chemical Materials, Organic

Matrix Type: NPW/SCM

Method: 8260B

- o-Xylene
- p-Xylene
- Styrene
- Tetrachloroethene
- trans-1,2-Dichloroethene
- Trichloroethene
- Trichlorotrifluoroethane
- Vinyl chloride
- n-Butylbenzene
- p-Isopropyltoluene
- sec-Butylbenzene
- tert-Butylbenzene
- Toluene
- trans-1,3-Dichloropropene
- Trichlorofluoromethane
- Vinyl acetate
- Xylenes (Total)

Method: 8270C

Matrix Type: NPW/SCM

- 1,2,4-Trichlorobenzene
- 1,2-Diphenylhydrazine
- 1,4-Dichlorobenzene
- 1-Methylnaphthalene
- 2,4,6-Trichlorophenol
- 2,4-Dimethylphenol
- 2,4-Dinitrotoluene (2,4-DNT)
- 2-Chloronaphthalene
- 2-Methylnaphthalene
- 2-Nitroaniline
- 3,3'-Dichlorobenzidine
- 4,6-Dinitro-2-methylphenol
- 4-Chloro-3-methylphenol
- 4-Chlorophenyl phenyl ether
- 4-Nitroaniline
- Acenaphthene
- Aniline
- Benzidine
- Benzo(a)pyrene
- Benzo(g,h,i)perlyene
- Benzoic acid
- Bis(2-chloroethoxy) methane
- Bis(2-chloroisopropyl) ether
- Butyl benzyl phthalate
- 1,2-Dichlorobenzene
- 1,3-Dichlorobenzene
- 1,4-Dinitrobenzene
- 2,4,5-Trichlorophenol
- 2,4-Dichlorophenol
- 2,4-Dinitrophenol
- 2,6-Dinitrotoluene (2,6-DNT)
- 2-Chlorophenol
- 2-Methylphenol
- 2-Nitrophenol
- 3-Nitroaniline
- 4-Bromophenyl phenyl ether
- 4-Chloroaniline
- 4-Methylphenol (p-Cresol)
- 4-Nitrophenol
- Acenaphthylene
- Anthracene
- Benzo(a)anthracene
- Benzo(b)fluoranthene
- Benzo(k)fluoranthene
- Benzyl alcohol
- Bis(2-chloroethyl) ether
- Bis(2-ethylhexyl) phthalate
- Carbazole

STAT Analysis Corporation
2242 West Harrison Street
Chicago, IL 60612

FOT Name: Solid and Chemical Materials, Organic

Matrix Type: NPW/SCM

Method: 8270C

- Dibenz(a,h)anthracene
- Diethyl phthalate
- Di-n-butyl phthalate
- Diphenylamine
- Fluorene
- Hexachlorobutadiene
- Hexachloroethane
- Isophorone
- Naphthalene
- N-Nitrosodimethylamine
- N-Nitrosodiphenylamine
- p-Cresol (4-Methylphenol)
- Phenanthrene
- Pyrene
- Chrysene
- Dibenzofuran
- Dimethyl phthalate
- Di-n-octyl phthalate
- Fluoranthene
- Hexachlorobenzene
- Hexachlorocyclopentadiene
- Indeno(1,2,3-cd) pyrene
- m-Cresol (3-Methylphenol)
- Nitrobenzene
- N-Nitrosodi-n-propylamine
- o-Cresol (2-Methylphenol)
- Pentachlorophenol
- Phenol
- Pyridine

Method: 8270D

Matrix Type: NPW/SCM

- 1,2,4-Trichlorobenzene
- 1,2-Diphenylhydrazine
- 1,4-Dichlorobenzene
- 1-Methylnaphthalene
- 2,4,6-Trichlorophenol
- 2,4-Dimethylphenol
- 2,4-Dinitrotoluene (2,4-DNT)
- 2-Chloronaphthalene
- 2-Methylnaphthalene
- 2-Nitroaniline
- 3,3'-Dichlorobenzidine
- 4,6-Dinitro-2-methylphenol
- 4-Chloro-3-methylphenol
- 4-Chlorophenyl phenyl ether
- 4-Nitrophenol
- Acenaphthylene
- Anthracene
- Benzo(a)anthracene
- 1,2-Dichlorobenzene
- 1,3-Dichlorobenzene
- 1,4-Dinitrobenzene
- 2,4,5-Trichlorophenol
- 2,4-Dichlorophenol
- 2,4-Dinitrophenol
- 2,6-Dinitrotoluene (2,6-DNT)
- 2-Chlorophenol
- 2-Methylphenol (o-Cresol)
- 2-Nitrophenol
- 3-Nitroaniline
- 4-Bromophenyl phenyl ether
- 4-Chloroaniline
- 4-Nitroaniline
- Acenaphthene
- Aniline
- Benzidine
- Benzo(a)pyrene

State of Illinois
Environmental Protection Agency

Certificate No.: 003468

Awards the Certificate of Approval

STAT Analysis Corporation
2242 West Harrison Street
Chicago, IL 60612

FOT Name: Solid and Chemical Materials, Organic

Method: 8270D

Matrix Type: NPW/SCM

Benzo(g,h,i)perlyene	Benzo(b)fluoranthene
Benzoic acid	Benzo(k)fluoranthene
Bis(2-chloroethoxy) methane	Benzyl alcohol
Bis(2-chloroisopropyl) ether	Bis(2-chloroethyl) ether
Butyl benzyl phthalate	Bis(2-ethylhexyl) phthalate
Chrysene	Carbazole
Dibenzofuran	Dibenz(a,h)anthracene
Dimethyl phthalate	Diethyl phthalate
Di-n-octyl phthalate	Di-n-butyl phthalate
Fluoranthene	Diphenylamine
Hexachlorobenzene	Fluorene
Hexachlorocyclopentadiene	Hexachlorobutadiene
Indeno(1,2,3-cd) pyrene	Hexachloroethane
m-Cresol (3-Methylphenol)	Isophorone
Nitrobenzene	Naphthalene
N-Nitrosodi-n-propylamine	N-Nitrosodimethylamine
o-Cresol (2-Methylphenol)	N-Nitrosodiphenylamine
Pentachlorophenol	p-Cresol (4-Methylphenol)
Phenol	Phenanthrene
Pyridine	Pyrene

Method: 8321B

Matrix Type: NPW/SCM

2,4,5-T	2,4,5-TP (Silvex)
2,4-D	2,4-DB
Dalapon	Dicamba
Dichlorprop	Dinoseb
MCPA	MCPP

OREGON

Environmental Laboratory Accreditation Program

NELAP Recognized

STAT Analysis Corporation

IL300001

2242 West Harrison Street

Chicago,IL 60612

IS GRANTED APPROVAL BY ORELAP UNDER THE 2009 TNI STANDARDS, TO PERFORM ANALYSES ON ENVIRONMENTAL SAMPLES IN MATRICES AS LISTED BELOW :

	Air	*Drinking Water*	*Non Potable Water*	*Solids and Chem. Waste*	*Tissue*
Chemistry					

AND AS RECORDED IN THE LIST OF APPROVED ANALYTES, METHODS, ANALYTICAL TECHNIQUES, AND FIELDS OF TESTING ISSUED CONCURRENTLY WITH THIS CERTIFICATE AND REVISED AS NECESSARY.

ACCREDITED STATUS DEPENDS ON SUCCESSFUL ONGOING PARTICIPATION IN THE PROGRAM AND CONTINUED COMPLIANCE WITH THE STANDARDS.

CUSTOMERS ARE URGED TO VERIFY THE LABORATORY'S CURRENT ACCREDITATION STATUS IN OREGON.

Gary K. Ward, MS

Oregon State Public Health Laboratory

ORELAP Administrator

3150 NW. 229th Ave, Suite 100

Hillsboro, OR 97124

ISSUE DATE: 06/06/2014

EXPIRATION DATE: 06/05/2015

Certificate No: IL300001 - 010

Oregon

Environmental Laboratory Accreditation Program

Department of Agriculture, Laboratory Division
Department of Environmental Quality, Laboratory Division
Oregon Health Authority, Public Health Division

NELAP Recognized

ORELAP Fields of Accreditation

ORELAP ID: IL300001
EPA CODE: IL00086
Certificate: IL300001 - 010

STAT Analysis Corporation

2242 West Harrison Street
Chicago IL 60612

Issue Date: 06/06/2014 ***Expiration Date:*** 06/05/2015

As of 06/06/2014 ***this list supercedes all previous lists for this certificate number. Customers. Please verify the current accreditation standing with ORELAP.***

NELAP RECOGNIZED

MATRIX : Air

Reference	Code	Description
40 CFR Part 50 Appendix J	**10000507**	**Determination of Particulate Matter as PM10 PARTICULATE MATTER AS PM10 IN THE ATMOSPHERE**

Analyte Code	*Analyte*
3950	Particulates <10 um

Reference	Code	Description
EPA 3C	**10247708**	**Fixed Gasses by GC/TCD**

Analyte Code	*Analyte*
3755	Carbon dioxide
4926	Methane
1843	Nitrogen
3895	Oxygen

Reference	Code	Description
EPA IO-3.1	**10246001**	**SPM - Selection, Preparation, Extraction**

Analyte Code	*Analyte*
8031	Extraction/Preparation
3915	Particulates

Reference	Code	Description
EPA IO-3.2	**10246205**	**SPM - Metals in Ambient Air by AAS**

Analyte Code	*Analyte*
1075	Lead

Reference	Code	Description
EPA IO-3.5	**10246603**	**SPM - Metals in Ambient Air by ICP/MS**

Analyte Code	*Analyte*
1005	Antimony
1010	Arsenic
1015	Barium
1020	Beryllium
1030	Cadmium
1040	Chromium
1050	Cobalt
1055	Copper
1070	Iron
1075	Lead
1090	Manganese
1100	Molybdenum
1105	Nickel
1140	Selenium

ORELAP Fields of Accreditation

ORELAP ID: IL300001
EPA CODE: IL00086
Certificate: IL300001 - 010

STAT Analysis Corporation

2242 West Harrison Street
Chicago IL 60612

Issue Date: 06/06/2014 ***Expiration Date:*** 06/05/2015

As of 06/06/2014 ***this list supercedes all previous lists for this certificate number.***
Customers. Please verify the current accreditation standing with ORELAP.

Analyte Code	*Analyte*
1150	Silver
1165	Thallium
1175	Tin
1180	Titanium
1185	Vanadium
1190	Zinc

EPA TO-13A **10248405** **Polycyclic Aromatic Hydrocarbons In Ambient Air by GC/MS**

Analyte Code	*Analyte*
6380	1-Methylnaphthalene
6385	2-Methylnaphthalene
5500	Acenaphthene
5505	Acenaphthylene
5555	Anthracene
5575	Benzo(a)anthracene
5580	Benzo(a)pyrene
5590	Benzo(g,h,i)perylene
5600	Benzo(k)fluoranthene
5585	Benzo[b]fluoranthene
5855	Chrysene
5895	Dibenz(a,h) anthracene
5905	Dibenzofuran
6265	Fluoranthene
6270	Fluorene
6315	Indeno(1,2,3-cd) pyrene
5005	Naphthalene
6615	Phenanthrene
6665	Pyrene

EPA TO-14A **10248609** **Volatile Organic Compounds with SUMMA canister and GC/MS**

Analyte Code	*Analyte*
5185	1,1,1-Trichloro-2,2,2-trifluoroethane
5160	1,1,1-Trichloroethane
5110	1,1,2,2-Tetrachloroethane
5165	1,1,2-Trichloroethane
4630	1,1-Dichloroethane
4640	1,1-Dichloroethylene
5155	1,2,4-Trichlorobenzene
5210	1,2,4-Trimethylbenzene
4585	1,2-Dibromoethane (EDB, Ethylene dibromide)
4695	1,2-Dichloro-1,1,2,2-tetrafluoroethane (Freon-114)
4610	1,2-Dichlorobenzene
4635	1,2-Dichloroethane (Ethylene dichloride)
4655	1,2-Dichloropropane
5215	1,3,5-Trimethylbenzene
9318	1,3-Butadiene
4615	1,3-Dichlorobenzene
4620	1,4-Dichlorobenzene
4735	1,4-Dioxane (1,4- Diethyleneoxide)
4836	1-Propene
4410	2-Butanone (Methyl ethyl ketone, MEK)
4860	2-Hexanone
4542	4-Ethyltoluene
4995	4-Methyl-2-pentanone (MIBK)
4375	Benzene
5635	Benzyl chloride
4395	Bromodichloromethane
4400	Bromoform
4450	Carbon disulfide

ORELAP Fields of Accreditation

ORELAP ID: IL300001
EPA CODE: IL00086
Certificate: IL300001 - 010

STAT Analysis Corporation

2242 West Harrison Street
Chicago IL 60612

Issue Date: 06/06/2014 ***Expiration Date:*** 06/05/2015

As of 06/06/2014 ***this list supercedes all previous lists for this certificate number.***
Customers. Please verify the current accreditation standing with ORELAP.

Analyte Code	*Analyte*
4455	Carbon tetrachloride
4475	Chlorobenzene
4575	Chlorodibromomethane
4485	Chloroethane (Ethyl chloride)
4505	Chloroform
4645	cis-1,2-Dichloroethylene
4680	cis-1,3-Dichloropropene
4555	Cyclohexane
4625	Dichlorodifluoromethane (Freon-12)
4755	Ethyl acetate
4765	Ethylbenzene
4835	Hexachlorobutadiene
4895	Isopropyl alcohol (2-Propanol, Isopropanol)
5240	m+p-xylene
4950	Methyl bromide (Bromomethane)
4960	Methyl chloride (Chloromethane)
5000	Methyl tert-butyl ether (MTBE)
4975	Methylene chloride (Dichloromethane)
5005	Naphthalene
4825	n-Heptane
4855	n-Hexane
5250	o-Xylene
5100	Styrene
5115	Tetrachloroethylene (Perchloroethylene)
5120	Tetrahydrofuran (THF)
5140	Toluene
4700	trans-1,2-Dichloroethylene
4685	trans-1,3-Dichloropropylene
5170	Trichloroethene (Trichloroethylene)
5175	Trichlorofluoromethane (Fluorotrichloromethane, Freon 11)
5225	Vinyl acetate
5235	Vinyl chloride
5260	Xylene (total)

EPA TO-15 **10248803** **VOCs collected in Canisters by GC/MS**

Analyte Code	*Analyte*
5185	1,1,1-Trichloro-2,2,2-trifluoroethane
5160	1,1,1-Trichloroethane
5110	1,1,2,2-Tetrachloroethane
5165	1,1,2-Trichloroethane
4630	1,1-Dichloroethane
4640	1,1-Dichloroethylene
5155	1,2,4-Trichlorobenzene
5210	1,2,4-Trimethylbenzene
4585	1,2-Dibromoethane (EDB, Ethylene dibromide)
4695	1,2-Dichloro-1,1,2,2-tetrafluoroethane (Freon-114)
4610	1,2-Dichlorobenzene
4635	1,2-Dichloroethane (Ethylene dichloride)
4655	1,2-Dichloropropane
5215	1,3,5-Trimethylbenzene
9318	1,3-Butadiene
4615	1,3-Dichlorobenzene
4620	1,4-Dichlorobenzene
4735	1,4-Dioxane (1,4- Diethyleneoxide)
4836	1-Propene
4410	2-Butanone (Methyl ethyl ketone, MEK)
4860	2-Hexanone
4542	4-Ethyltoluene
4995	4-Methyl-2-pentanone (MIBK)
4375	Benzene

ORELAP Fields of Accreditation

ORELAP ID: IL300001
EPA CODE: IL00086
Certificate: IL300001 - 010

STAT Analysis Corporation

2242 West Harrison Street
Chicago IL 60612

Issue Date: 06/06/2014 ***Expiration Date:*** 06/05/2015

As of 06/06/2014 ***this list supercedes all previous lists for this certificate number.***
Customers. Please verify the current accreditation standing with ORELAP.

Analyte Code	*Analyte*
5635	Benzyl chloride
4395	Bromodichloromethane
4400	Bromoform
4450	Carbon disulfide
4455	Carbon tetrachloride
4475	Chlorobenzene
4575	Chlorodibromomethane
4485	Chloroethane (Ethyl chloride)
4505	Chloroform
4645	cis-1,2-Dichloroethylene
4680	cis-1,3-Dichloropropene
4555	Cyclohexane
4625	Dichlorodifluoromethane (Freon-12)
4755	Ethyl acetate
4765	Ethylbenzene
4835	Hexachlorobutadiene
4895	Isopropyl alcohol (2-Propanol, Isopropanol)
5240	m+p-xylene
4950	Methyl bromide (Bromomethane)
4960	Methyl chloride (Chloromethane)
5000	Methyl tert-butyl ether (MTBE)
4975	Methylene chloride (Dichloromethane)
5005	Naphthalene
4825	n-Heptane
4855	n-Hexane
5250	o-Xylene
5100	Styrene
5115	Tetrachloroethylene (Perchloroethylene)
5120	Tetrahydrofuran (THF)
5140	Toluene
4700	trans-1,2-Dichloroethylene
4685	trans-1,3-Dichloropropylene
5170	Trichloroethene (Trichloroethylene)
5175	Trichlorofluoromethane (Fluorotrichloromethane, Freon 11)
5225	Vinyl acetate
5235	Vinyl chloride
5260	Xylene (total)

RECOGNIZED

STATE OF ILLINOIS

ENVIRONMENTAL PROTECTION AGENCY
NELAP - RECOGNIZED
ENVIRONMENTAL LABORATORY ACCREDITATION

is hereby granted to

GRACE ANALYTICAL LAB, INC.
5300-B MCDERMOTT DRIVE
BERKELEY, IL 60163

NELAP ACCREDITED
ACCREDITATION NUMBER #100246

According to the Illinois Administrative Code, Title 35, Subtitle A, Chapter II, Part 186, ACCREDITATION OF LABORATORIES FOR DRINKING WATER, WASTEWATER AND HAZARDOUS WASTES ANALYSIS, the State of Illinois formally recognizes that this laboratory is technically competent to perform the environmental analyses listed on the scope of accreditation detailed below.

The laboratory agrees to perform all analyses listed on this scope of accreditation according to the Part 186 requirements and acknowledges that continued accreditation is dependent on successful ongoing compliance with the applicable requirements of Part 186. Please contact the Illinois EPA Environmental Laboratory Accreditation Program (IL ELAP) to verify the laboratory's scope of accreditation and accreditation status. Accreditation by the State of Illinois is not an endorsement or a guarantee of validity of the data generated by the laboratory.

Celeste M. Crowley
Acting Manager
Environmental Laboratory Accreditation Program

John South
Accreditation Officer
Environmental Laboratory Accreditation Program

Certificate No.: 003432
Expiration Date: 08/31/2015
Issued On: 07/22/2014

APPENDIX F
CITY OF CHICAGO GROUNDWATER ORDINANCE

STATE OF ILLINOIS,-
County of Cook. ss.

I, JAMES J. LASKI, City Clerk of the City of Chicago in the County of Cook and State of Illinois, DO HEREBY CERTIFY that the annexed and foregoing is a true and correct copy of that certain ordinance now on file in my office for an amendment of Title 11, Chapter 8 of Municipal Code of Chicago by addition of new Section 390 defining potable water and prohibiting use of certain groundwater collection device to supply any potable water supply system.

I DO FURTHER CERTIFY that the said ordinance was adopted by the City Council of the said City of Chicago on the twenty-eighth (28th) day of November, A.D. 2001 and deposited in my office on the twenty-eighth (28th) day of November, A.D. 2001.

I DO PURTHER CERTIFY that the vote on the question of the adoption of the said ordinance by the said City Council was taken by yeas and nays and recorded in the Journal of the Proceedings of the said City Council, and that the result of said vote so taken was as follows, to wit:

Yeas 47. Nays 0.

I DO FURTHER CERTIFY that the said ordinance was delivered to the Mayor of the said City of Chicago after the adoption thereof by the said City Council, without delay, by the City Clerk of the said City of Chicago, and that the said Mayor failed to return the said ordinance to the said City Council with his written objections thereto at the next regular meeting of the said City Council occurring not less than five (5) days after the adoption of the said ordinance.

I DO FURTHER CERTIFY that the original, of which the foregoing is a true copy, is entrusted to my care for safe keeping, and that I am the lawful keeper of the same.

(L.S.)

IN WITNESS WHEREOF, I have hereunto set my hand and affixed the corporate seal of the City of Chicago aforesaid, at the said City, in the County and State aforesaid, this sixth (6th) day of December, A.D. 2001.

JAMES J. LASKI, City Clerk.

SUBSTITUTE

ORDINANCE

BE IT ORDAINED BY THE CITY COUNCIL OF THE CITY OF CHICAGO:

SECTION 1. The Municipal Code of the City of Chicago is hereby amended by adding a new Section 11-8-390, as follows:

11-8-390 Potable water wells.

For purposes of this section, "potable water" is any water used for human consumption, including but not limited to water used for drinking, bathing, washing dishes, preparing foods and watering gardens in which produce intended for human consumption is grown. No groundwater well, cistern or other groundwater collection device installed after May 14, 1997, may be used to supply any potable water supply system, except at points of withdrawal by the City of Chicago or by a unit of local government pursuant to intergovernmental agreement with the City of Chicago.

SECTION 2. This ordinance shall be in full force and effect from and after its passage and approval.

MEMORANDUM OF UNDERSTANDING BETWEEN THE CITY OF CHICAGO, ILLINOIS AND THE ILLINOIS ENVIRONMENTAL PROTECTION AGENCY REGARDING (A) THE USE OF A LOCAL POTABLE WATER SUPPLY WELL ORDINANCE AS AN ENVIRONMENTAL INSTITUTIONAL CONTROL AND (B) THE PROVISION OF INFORMATION RELATING TO "NO FURTHER REMEDIATION" DETERMINATIONS BY THE ILLINOIS ENVIRONMENTAL PROTECTION AGENCY TO THE CITY OF CHICAGO

I. PURPOSE AND INTENT

A. This Memorandum of Understanding ("MOU") is entered into between the City of Chicago, Illinois ("the City") and the Illinois Environmental Protection Agency ("Illinois EPA") for the purpose of (a) satisfying the requirements of 35 Ill. Adm. Code 742.1015 for the use of potable water supply well ordinances as environmental institutional controls and (b) ensuring that the City will be provided with copies of all "No Further Remediation" letters or determinations issued by the Illinois EPA pursuant to specific programs for sites located within the boundaries of Chicago, Illinois, in order to enable the City to maintain a complete and up-to-date registry of sites as required by 35 Ill. Adm. Code 742.1015(i)(5). The Illinois EPA has reviewed Sections 11-8-385 and 11-8-390 of the Municipal Code of Chicago as amended by Ordinance Number 097990 ("Potable Water Supply Well Ordinance"), attached as Attachment A, and has determined that the Municipal Code of Chicago prohibits the installation and use of new potable water supply wells by private entities but will allow the installation of potable water supply wells by the City and other units of local government pursuant to intergovernmental agreements with the City. In such cases, 35 Ill. Adm. Code 742.1015(a) provides that the City may enter into an MOU with the Illinois EPA to allow the use of the ordinance as an institutional control.

B. The intent of this Memorandum of Understanding is to (a) specify the responsibilities that must be assumed by the City to satisfy the requirements for MOUs as set forth at 35 Ill. Adm. Code 742.1015(i), and (b) require the Illinois EPA to provide the City with copies of all "No Further Remediation" letters or determinations that the Illinois EPA issues for sites located within the City of Chicago to enable the City to maintain a registry of sites pursuant to 35 Ill. Adm. Code 742.1015(i)(5).

II. DECLARATIONS AND ASSUMPTION OF RESPONSIBILITY

A. In order to ensure the long-term integrity of the Potable Water Supply Well Ordinance as an environmental institutional control and that risk to human health and the environment from contamination left in place in reliance on the Potable Water Supply Well Ordinance is effectively managed, the City hereby assumes the following responsibilities pursuant to 35 Ill. Adm. Code 742.1015(i):

1. The City will notify the Illinois EPA Bureau of Land of any changes to or requests for variance from the Potable Water Supply Well Ordinance at least 30 days prior to the date the local government is scheduled to take action on the proposed change or request (35 Ill. Adm. Code 742.1015(i)(4));

2. The City will maintain a registry of all sites within its corporate limits that have received "No Further Remediation" determinations from the Illinois EPA pursuant to specific programs (35 Ill. Adm. Code 742.1015(i)(5));

3. If the City determines to install a new potable water supply well(s), the City will review the registry of sites established under paragraph II.A.2. prior to siting such potable water supply well(s) within the area covered by the Potable Water Supply Well Ordinance, pursuant to 35 Ill. Adm. Code 742.1015(i)(6)(A);

4. If the City determines to install a new potable water supply well(s), the City will determine whether the potential source of potable water has been or may be affected by contamination left in place at the sites tracked and reviewed under paragraphs II.A.2. and 3. (35 Ill. Adm. Code 742.1015(i)(6)(B)); and

5. If the City determines to install a new potable water supply well(s), the City will take action as necessary to ensure that the potential source of potable water is protected from contamination or treated before it is used as a potable water supply (35 Ill. Adm. Code 742.1015(i)(6)(C));

6. If the City enters into intergovernmental agreements under Section 11-8-390 of the Municipal Code of Chicago to allow other units of local government to install new potable water supply well(s) within the corporate limits of the City, the City will require compliance with the procedures set forth in paragraphs II.A.3., 4., and 5. as a part of such agreements.

7. Notification under paragraph II.A.1. above, or other communications concerning this MOU directed to the Illinois EPA, shall be addressed to:

Manager, Division of Remediation Management
Bureau of Land
Illinois Environmental Protection Agency
P.O. Box 19276
Springfield, IL 62794-9276

B. In order to ensure the long-term integrity of the Potable Water Supply Well Ordinance as an environmental institutional control and that risk to human health and the environment from contamination left in place in reliance on the Potable Water Supply Well Ordinance or other specific programs can be effectively managed, the Illinois EPA hereby assumes

the following responsibilities:

1. The Illinois EPA will provide the City with copies of all "No Further Remediation" letters or determinations that it issues pursuant to 35 Ill. Adm. Code 742, and other specific programs, for sites located within the boundaries of the City at the time said letters or determinations are provided to remediation applicants.

2. Copies of "No Further Remediation" letters or determinations provided to the City pursuant to paragraph II.B.1. above, or other communications concerning this MOU directed to the City, shall be addressed to:

Commissioner
Chicago Department of Environment
25th Floor
30 North LaSalle Street
Chicago, IL 60602-2575

III. SUPPORTING DOCUMENTATION

The following documentation is required by 35 Ill. Adm. Code 742.1015(i) and is attached to this MOU:

A. Attachment A: A copy of the Potable Water Supply Well Ordinance certified by the city clerk or other official as the current, controlling law (35 Ill. Adm. Code 742.1015(i)(3)) and a statement of the authority of the City to enter into the MOU (35 Ill. Adm. Code 742.1015(i)(1)).;

B. Attachment B: Identification of the legal boundaries within which the Potable Water Supply Well Ordinance is applicable (35 Ill. Adm. Code 742.1015(i)(2)); and

IN WITNESS WHEREOF, the lawful representatives of the parties have caused this MOU to be signed as follows:

FOR: The City of Chicago, Illinois

BY: Avis L. Henderson DATE: July 1, 1997

Commissioner
Department of Environment
City of Chicago

FOR: Illinois Environmental Protection Agency

BY: Gary P. King DATE: July 3, 1997

(Name and title of signatory)
Division of Remediation Management
Bureau of Land

Version 6/27/97

FORM C.C. 424 3M 4-05

Be It Ordained by the City Council of the City of Chicago:

SECTION 1. Chapter 11-8 of the Municipal Code of Chicago is hereby amended by adding a new Section 11-8-385 and by amending Section 11-8-390 by inserting the language in italics, as follows:

11-8-385 Potable Water Defined.

Potable water is any water used for human consumption, including, but not limited to water used for drinking, bathing, washing dishes, preparing foods and watering gardens in which produce intended for human consumption is grown.

11-8-390 Prohibited Use Of Secondary Water; *Prohibited Installation Of New Potable Water Supply Wells.*

No secondary water shall overflow into or be discharged into any surge tank, storage tank, or reservoir, or shall in any way be piped or conveyed into the water supply system of any building, structure, or premises to become a part of or be mixed with the fresh water supply from the mains of the Chicago Waterworks System either inside of the premises or in the water service pipe. Secondary water shall not be piped to or used in any plumbing fixture, or for cooling crushers, rollers, or mixers where foods, candies, liquids or materials are manufactured for human or animal consumption. No connection, tap, or opening shall be made in a water distribution system other than an approved water distribution system which will permit such water being used for drinking.

Wherever the fire-protective equipment in any building, structure or premises has service from the Chicago Waterworks System, no pipe or other conduit which conveys secondary water shall be cross-connected to the fire-protective equipment. All fire-protective equipment connected to the Chicago Waterworks System shall be constructed in such manner that

EXHIBIT

A

all tanks, pipes, pumps, surge tanks, and fire hydrants can be thoroughly drained, flushed and cleaned by the owners of such equipment and premises and there shall be no direct connections from the tanks, pipes and other equipment to any drainage pipes or sewers. *No groundwater well, cistern or other groundwater collection device installed after the effective date of this amendatory ordinance may be used to supply any potable water supply system, except at points of withdrawal by the City of Chicago or by units of local government pursuant to intergovernmental agreement with the City of Chicago.*

SECTION 2. Section 2-30-030 of the Municipal Code of Chicago is hereby amended by deleting the language in brackets and inserting the language in italics, as follows:

2-30-030 Commissioner -- Powers And Duties Designated.

The commissioner of the environment shall have the following powers and duties:

* * * * *

(21) To enter into grant agreements, cooperation agreements and other agreements or contracts with governmental entities, private business and civic and community groups necessary to implement the Green Streets Program and other urban forestry, beautification and environmental enhancement programs; *and agreements to implement the State of Illinois Site Remediation Program;*

SECTION 3. This ordinance shall be in full force and effect from and after its passage and approval.

STATE OF ILLINOIS,
County of Cook. ss.

I, JAMES J. LASKI, City Clerk of the City of Chicago in the County of Cook and State of Illinois, DO HEREBY CERTIFY that the annexed and foregoing is a true and correct copy of that certain ordinance now on file in my office an ordinance amending Title 11, Chapter 8 and Title 2, Chapter 30 of the Municipal Code of Chicago by establishment of definition of potable water, regulation of potable water supply system and empowerment of commissioner of environment for implementation of State of Illinois Site Remediation Program.

I DO FURTHER CERTIFY that the said ordinance was passed by the City Council of the said City of Chicago on the fourteenth (14th) day of May, A. D. 1997 and deposited in my office on the fourteenth (14th) day of May, A. D. 1997.

I DO FURTHER CERTIFY that the vote on the question of the passage of the said ordinance by the said City Council was taken by yeas and nays and recorded in the Journal of the Proceedings of the said City Council, and that the result of said vote so taken was as follows, to wit:

Yeas 47. Nays None.

I DO FURTHER CERTIFY that the said ordinance was delivered to the Mayor of the said City of Chicago after the passage thereof by the said City Council, without delay, by the City Clerk of the said City of Chicago, and that the said Mayor failed to return the said ordinance to the said City Council with his written objections thereto at the next regular meeting of the said City Council occurring not less than five days after the passage of the said ordinance.

I DO FURTHER CERTIFY that the original, of which the foregoing is a true copy, is entrusted to my care for safe keeping, and that I am the lawful keeper of the same.

IN WITNESS WHEREOF, I have hereunto set my hand and affixed the corporate seal of the City of Chicago aforesaid, at the said City, in the County and State aforesaid, this twenty-seventh (27th) day of June, A. D. 1997.

[L. S.]

James J. Laski

JAMES J. LASKI, City Clerk.

City of Chicago
Richard M. Daley, Mayor

Department of Environment

Henry L. Henderson
Commissioner

Twenty-fifth Floor
30 North LaSalle Street
Chicago, Illinois 60602-2575
(312) 744-7606 (Voice)
(312) 744-6451 (FAX)
(312) 744-3586 (TTY)
http://www.ci.chi.il.us

July 1, 1997

Mr. Gary P. King
Manager, Division of Remediation Management
Bureau of Land
Illinois Environmental Protection Agency
1001 N. Grand Avenue, East
Springfield, IL 62702

RECEIVED
JUL 0 3 1997
I.E.P.A. / B.O.L.

Re: Chicago Ordinance No. 097990

Dear Mr. King:

Pursuant to 35 Ill. Adm. Code 742.1015(l)(2), Section 11-8-385 and 11-8-390 of the Municipal Code of Chicago, as amended by Ordinance No. 097990, apply to all areas within the corporate limits of the City of Chicago.

Sincerely,

Henry L. Henderson
Commissioner

cc: Mort Ames
Asst. Corp. Counsel

Chicago Blue ag Recycling
Please Recycle!

EXHIBIT
B

Chicago Works

APPENDIX G
TIER II CALCULATIONS

EPA On-line Tools for Site Assessment Calculation

Module Home Objectives Table of Contents Previous < Next >

Hydraulic Gradient

Hydraulic Gradient $i = (h_2 - h_1)/d$

i = Hydraulic Gradient [L/L]
h_1 = Upgradient Head [L]
h_2 = Downgradient Head [L]
d = Distance Between Wells [L]

Example Data | Calculate | Clear

Save Data | Recall Data | Go Back

Site Name	650 West 83rd Street	
Date	3/17/2015	Current Date
Distance Unit	ft	
Distance Between Wells	500.0	
Head Unit	ft	
Upgradient Water Level (h_1)	93.29	
Downgradient Water Level (h_2)	92.76	
Gradient (i)	-0.00106	

Well	Elevation (7/19/13)
MW5:	93.29
MW34:	92.76

Distance between wells: 500 feet

MW10: 92.81 (Not used for gradient)

Previous Top ^ Next

Home | Glossary | Notation | Links | References | Calculators

Tier 2 Modeling: Lead
Equation R26 - Dissolved Concentration along Centerline, C(x)
650 West 83rd Street
Chicago, IL

$$C_{(x)} = C_{source} \bullet \exp\left[\left(\frac{X}{2\alpha_x}\right) \bullet \left(1 - \sqrt{1 + \frac{4\lambda \bullet \alpha_x}{U}}\right)\right] \bullet erf\left[\frac{S_w}{4 \bullet \sqrt{\alpha_y \bullet X}}\right] \bullet erf\left[\frac{S_d}{2 \bullet \sqrt{\alpha_z \bullet X}}\right]$$

Site-Wide Parameters				
Parameter	**Symbol**	**Units**	**Source**	**Value**
Distance along the CL of the GW Plume Emanating from a Source	X	feet	Compliance Point	75
Distance along the CL of the GW Plume Emanating from a Source	X	cm	Compliance Point	2286
Longitudinal Dispersivity	α_x	cm	R16 - 0.10 * X	228.6
Transverse Dispersivity	α_y	cm	R17 - α_x / 3	76.2
Vertical Dispersivity	α_z	cm	R18 - α_x / 20	11.43
Specific Discharge	U	cm/d	R19 - K * I / θ_T	0.566329898
Aquifer Hydraulic Conductivity	K	cm/sec	MW-5 Slug Test	0.002659
Aquifer Hydraulic Conductivity	K	cm/d	MW-5 Slug Test	229.7376
Hydraulic Gradient	i	cm/cm	MW-5 ---> MW-34	0.00106
Total Soil Porosity	θ_T	cm^3/cm^3_{soil}	R23 - θ_{as} + θ_{ws}	0.43
Volumetric Water Content in Vadose Zone Soils	θ_{ws}	cm^3_{water}/cm^3_{soil}	TACO Default	0.3
Volumetric Air Content in Vadose Zone Soils	θ_{as}	cm^3_{air}/cm^3_{soil}	TACO Default	0.13
Source Width Perpendicular to Groundwater Flow Direction (horizontal plane)	S_w	feet	NE--> SW corner	500
Source Width Perpendicular to Groundwater Flow Direction (horizontal plane)	S_w	cm	NE--> SW corner	15240
Source Width Perpendicular to Groundwater Flow Direction (vertical plane)	S_d	feet	742.Table D	6.562
Source Width Perpendicular to Groundwater Flow Direction (vertical plane)	S_d	cm	742.Table D	200

Chemical-Specific Parameters				
Contaminant of Concern	**Source**	**C_{source} (mg/L)**	**λ, First Order Degradation Constant (d^{-1})**	**Source for λ**
Lead	MW-5	0.012	0	Default Value

Calculations				
Contaminant of Concern	**Source**	**$C_{(x)}$ (mg/L)**	**Groundwater Classification**	**GRO (mg/L)**
Lead	MW-5	0.007420678	Class I	0.0075

Tier 2 Modeling: Lead
Equation R26 - Dissolved Concentration along Centerline, C(x)
650 West 83rd Street
Chicago, IL

$$C_{(x)} = C_{source} \bullet \exp\left[\left(\frac{X}{2\alpha_x}\right) \bullet \left(1 - \sqrt{1 + \frac{4\lambda \bullet \alpha_x}{U}}\right)\right] \bullet erf\left[\frac{S_w}{4 \bullet \sqrt{\alpha_y \bullet X}}\right] \bullet erf\left[\frac{S_d}{2 \bullet \sqrt{\alpha_z \bullet X}}\right]$$

Site-Wide Parameters				
Parameter	**Symbol**	**Units**	**Source**	**Value**
Distance along the CL of the GW Plume Emanating from a Source	X	feet	Compliance Point	430
Distance along the CL of the GW Plume Emanating from a Source	X	cm	Compliance Point	13106.4
Longitudinal Dispersivity	α_x	cm	R16 - 0.10 * X	1310.64
Transverse Dispersivity	α_y	cm	R17 - α_x / 3	436.88
Vertical Dispersivity	α_z	cm	R18 - α_x / 20	65.532
Specific Discharge	U	cm/d	R19 - K * I / θ_T	0.566329898
Aquifer Hydraulic Conductivity	K	cm/sec	MW-5 Slug Test	0.002659
Aquifer Hydraulic Conductivity	K	cm/d	MW-5 Slug Test	229.7376
Hydraulic Gradient	i	cm/cm	MW-5 ---> MW-34	0.00106
Total Soil Porosity	θ_T	cm^3/cm^3_{soil}	R23 - θ_{as} + θ_{ws}	0.43
Volumetric Water Content in Vadose Zone Soils	θ_{ws}	cm^3_{water}/cm^3_{soil}	TACO Default	0.3
Volumetric Air Content in Vadose Zone Soils	θ_{as}	cm^3_{air}/cm^3_{soil}	TACO Default	0.13
Source Width Perpendicular to Groundwater Flow Direction (horizontal plane)	S_w	feet	NE--> SW corner	500
Source Width Perpendicular to Groundwater Flow Direction (horizontal plane)	S_w	cm	NE--> SW corner	15240
Source Width Perpendicular to Groundwater Flow Direction (vertical plane)	S_d	feet	742.Table D	6.562
Source Width Perpendicular to Groundwater Flow Direction (vertical plane)	S_d	cm	742.Table D	200

Chemical-Specific Parameters				
Contaminant of Concern	**Source**	**C_{source} (mg/L)**	**λ, First Order Degradation Constant (d^{-1})**	**Source for λ**
Lead	MW-10	0.063	0	Default Value

Calculations				
Contaminant of Concern	**Source**	**$C_{(x)}$ (mg/L)**	**Groundwater Classification**	**GRO (mg/L)**
Lead	MW-10	0.007455285	Class I	0.0075

Tier 2 Modeling: Lead
Equation R26 - Dissolved Concentration along Centerline, C(x)
650 West 83rd Street
Chicago, IL

$$C_{(x)} = C_{source} \bullet \exp\left[\left(\frac{X}{2\alpha_x}\right) \bullet \left(1 - \sqrt{1 + \frac{4\lambda \bullet \alpha_x}{U}}\right)\right] \bullet erf\left[\frac{S_w}{4 \bullet \sqrt{\alpha_y \bullet X}}\right] \bullet erf\left[\frac{S_d}{2 \bullet \sqrt{\alpha_z \bullet X}}\right]$$

Site-Wide Parameters				
Parameter	**Symbol**	**Units**	**Source**	**Value**
Distance along the CL of the GW Plume Emanating from a Source	X	feet	Compliance Point	180
Distance along the CL of the GW Plume Emanating from a Source	X	cm	Compliance Point	5486.4
Longitudinal Dispersivity	α_x	cm	R16 - 0.10 * X	548.64
Transverse Dispersivity	α_y	cm	R17 - α_x / 3	182.88
Vertical Dispersivity	α_z	cm	R18 - α_x / 20	27.432
Specific Discharge	U	cm/d	R19 - K * I / θ_T	0.566329898
Aquifer Hydraulic Conductivity	K	cm/sec	MW-5 Slug Test	0.002659
Aquifer Hydraulic Conductivity	K	cm/d	MW-5 Slug Test	229.7376
Hydraulic Gradient	i	cm/cm	MW-5 ---> MW-34	0.00106
Total Soil Porosity	θ_T	cm^3/cm^3_{soil}	R23 - θ_{as} + θ_{ws}	0.43
Volumetric Water Content in Vadose Zone Soils	θ_{ws}	cm^3_{water}/cm^3_{soil}	TACO Default	0.3
Volumetric Air Content in Vadose Zone Soils	θ_{as}	cm^3_{air}/cm^3_{soil}	TACO Default	0.13
Source Width Perpendicular to Groundwater Flow Direction (horizontal plane)	S_w	feet	NE--> SW corner	500
Source Width Perpendicular to Groundwater Flow Direction (horizontal plane)	S_w	cm	NE--> SW corner	15240
Source Width Perpendicular to Groundwater Flow Direction (vertical plane)	S_d	feet	742.Table D	6.562
Source Width Perpendicular to Groundwater Flow Direction (vertical plane)	S_d	cm	742.Table D	200

Chemical-Specific Parameters				
Contaminant of Concern	**Source**	**C_{source} (mg/L)**	**λ, First Order Degradation Constant (d^{-1})**	**Source for λ**
Lead	MW-34	0.026	0	Default Value

Calculations				
Contaminant of Concern	**Source**	**$C_{(x)}$ (mg/L)**	**Groundwater Classification**	**GRO (mg/L)**
Lead	MW-34	0.007398476	Class I	0.0075

Tier 2 Modeling: Lead
Equation R26 - Dissolved Concentration along Centerline, C(x)
650 West 83rd Street
Chicago, IL

$$C_{(x)} = C_{source} \bullet \exp\left[\left(\frac{X}{2\alpha_x}\right) \bullet \left(1 - \sqrt{1 + \frac{4\lambda \bullet \alpha_x}{U}}\right)\right] \bullet erf\left[\frac{S_w}{4 \bullet \sqrt{\alpha_y \bullet X}}\right] \bullet erf\left[\frac{S_d}{2 \bullet \sqrt{\alpha_z \bullet X}}\right]$$

Site-Wide Parameters				
Parameter	**Symbol**	**Units**	**Source**	**Value**
Distance along the CL of the GW Plume Emanating from a Source	X	feet	Compliance Point	540
Distance along the CL of the GW Plume Emanating from a Source	X	cm	Compliance Point	16459.2
Longitudinal Dispersivity	α_x	cm	R16 - 0.10 * X	1645.92
Transverse Dispersivity	α_y	cm	R17 - α_x / 3	548.64
Vertical Dispersivity	α_z	cm	R18 - α_x / 20	82.296
Specific Discharge	U	cm/d	R19 - K * I / θ_T	0.566329898
Aquifer Hydraulic Conductivity	K	cm/sec	MW-5 Slug Test	0.002659
Aquifer Hydraulic Conductivity	K	cm/d	MW-5 Slug Test	229.7376
Hydraulic Gradient	i	cm/cm	MW-5 ---> MW-34	0.00106
Total Soil Porosity	θ_T	cm^3/cm^3_{soil}	R23 - θ_{as} + θ_{ws}	0.43
Volumetric Water Content in Vadose Zone Soils	θ_{ws}	cm^3_{water}/cm^3_{soil}	TACO Default	0.3
Volumetric Air Content in Vadose Zone Soils	θ_{as}	cm^3_{air}/cm^3_{soil}	TACO Default	0.13
Source Width Perpendicular to Groundwater Flow Direction (horizontal plane)	S_w	feet	NE--> SW corner	500
Source Width Perpendicular to Groundwater Flow Direction (horizontal plane)	S_w	cm	NE--> SW corner	15240
Source Width Perpendicular to Groundwater Flow Direction (vertical plane)	S_d	feet	742.Table D	6.562
Source Width Perpendicular to Groundwater Flow Direction (vertical plane)	S_d	cm	742.Table D	200

Chemical-Specific Parameters				
Contaminant of Concern	**Source**	**C_{source} (mg/L)**	**λ, First Order Degradation Constant (d^{-1})**	**Source for λ**
Lead	MW-122	0.082	0	Default Value

Calculations				
Contaminant of Concern	**Source**	**$C_{(x)}$ (mg/L)**	**Groundwater Classification**	**GRO (mg/L)**
Lead	MW-122	0.007352323	Class I	0.0075

Tier 2 Modeling: Aluminum
Equation R26 - Dissolved Concentration along Centerline, C(x)
650 West 83rd Street
Chicago, IL

$$C_{(x)} = C_{source} \bullet \exp\left[\left(\frac{X}{2\alpha_x}\right)\bullet\left(1-\sqrt{1+\frac{4\lambda\bullet\alpha_x}{U}}\right)\right]\bullet erf\left[\frac{S_w}{4\bullet\sqrt{\alpha_y\bullet X}}\right]\bullet erf\left[\frac{S_d}{2\bullet\sqrt{\alpha_z\bullet X}}\right]$$

Site-Wide Parameters				
Parameter	**Symbol**	**Units**	**Source**	**Value**
Distance along the CL of the GW Plume Emanating from a Source	X	feet	Compliance Point	60
Distance along the CL of the GW Plume Emanating from a Source	X	cm	Compliance Point	1828.8
Longitudinal Dispersivity	α_x	cm	R16 - 0.10 * X	182.88
Transverse Dispersivity	α_y	cm	R17 - α_x / 3	60.96
Vertical Dispersivity	α_z	cm	R18 - α_x / 20	9.144
Specific Discharge	U	cm/d	R19 - K * I / θ_T	0.566329898
Aquifer Hydraulic Conductivity	K	cm/sec	MW-5 Slug Test	0.002659
Aquifer Hydraulic Conductivity	K	cm/d	MW-5 Slug Test	229.7376
Hydraulic Gradient	i	cm/cm	MW-5 ---> MW-34	0.00106
Total Soil Porosity	θ_T	cm^3/cm^3_{soil}	R23 - θ_{as} + θ_{ws}	0.43
Volumetric Water Content in Vadose Zone Soils	θ_{ws}	cm^3_{water}/cm^3_{soil}	TACO Default	0.3
Volumetric Air Content in Vadose Zone Soils	θ_{as}	cm^3_{air}/cm^3_{soil}	TACO Default	0.13
Source Width Perpendicular to Groundwater Flow Direction (horizontal plane)	S_w	feet	NE--> SW corner	500
Source Width Perpendicular to Groundwater Flow Direction (horizontal plane)	S_w	cm	NE--> SW corner	15240
Source Width Perpendicular to Groundwater Flow Direction (vertical plane)	S_d	feet	742.Table D	6.562
Source Width Perpendicular to Groundwater Flow Direction (vertical plane)	S_d	cm	742.Table D	200

Chemical-Specific Parameters				
Contaminant of Concern	**Source**	**C_{source} (mg/L)**	**λ, First Order Degradation Constant (d^{-1})**	**Source for λ**
Chemicals w/o Degradation Factors	MW-5	4.65	0	Default Value

Calculations				
Contaminant of Concern	**Source**	**$C_{(x)}$ (mg/L)**	**Groundwater Classification**	**GRO (mg/L)**
Chemicals w/o Degradation Factors - Aluminum	MW-5	3.375429426	Class I	3.5 mg/l

Tier 2 Modeling: Aluminum
Equation R26 - Dissolved Concentration along Centerline, C(x)
650 West 83rd Street
Chicago, IL

$$C_{(x)} = C_{source} \bullet \exp\left[\left(\frac{X}{2\alpha_x}\right) \bullet \left(1 - \sqrt{1 + \frac{4\lambda \bullet \alpha_x}{U}}\right)\right] \bullet erf\left[\frac{S_w}{4 \bullet \sqrt{\alpha_y \bullet X}}\right] \bullet erf\left[\frac{S_d}{2 \bullet \sqrt{\alpha_z \bullet X}}\right]$$

Site-Wide Parameters				
Parameter	**Symbol**	**Units**	**Source**	**Value**
Distance along the CL of the GW Plume Emanating from a Source	X	feet	Compliance Point	60
Distance along the CL of the GW Plume Emanating from a Source	X	cm	Compliance Point	1828.8
Longitudinal Dispersivity	α_x	cm	R16 - 0.10 * X	182.88
Transverse Dispersivity	α_y	cm	R17 - α_x / 3	60.96
Vertical Dispersivity	α_z	cm	R18 - α_x / 20	9.144
Specific Discharge	U	cm/d	R19 - K * I / θ_T	0.566329898
Aquifer Hydraulic Conductivity	K	cm/sec	MW-5 Slug Test	0.002659
Aquifer Hydraulic Conductivity	K	cm/d	MW-5 Slug Test	229.7376
Hydraulic Gradient	i	cm/cm	MW-5 ---> MW-34	0.00106
Total Soil Porosity	θ_T	cm^3/cm^3_{soil}	R23 - θ_{as} + θ_{ws}	0.43
Volumetric Water Content in Vadose Zone Soils	θ_{ws}	cm^3_{water}/cm^3_{soil}	TACO Default	0.3
Volumetric Air Content in Vadose Zone Soils	θ_{as}	cm^3_{air}/cm^3_{soil}	TACO Default	0.13
Source Width Perpendicular to Groundwater Flow Direction (horizontal plane)	S_w	feet	NE--> SW corner	500
Source Width Perpendicular to Groundwater Flow Direction (horizontal plane)	S_w	cm	NE--> SW corner	15240
Source Width Perpendicular to Groundwater Flow Direction (vertical plane)	S_d	feet	742.Table D	6.562
Source Width Perpendicular to Groundwater Flow Direction (vertical plane)	S_d	cm	742.Table D	200

Chemical-Specific Parameters				
Contaminant of Concern	**Source**	**C_{source} (mg/L)**	**λ, First Order Degradation Constant (d^{-1})**	**Source for λ**
Chemicals w/o Degradation Factors	MW-122	4.62	0	Default Value

Calculations				
Contaminant of Concern	**Source**	**$C_{(x)}$ (mg/L)**	**Groundwater Classification**	**GRO (mg/L)**
Chemicals w/o Degradation Factors - Aluminum	MW-122	3.353652462	Class I	3.5 mg/l

Tier 2 Modeling: Iron
Equation R26 - Dissolved Concentration along Centerline, C(x)
650 West 83rd Street
Chicago, IL

$$C_{(x)} = C_{source} \bullet \exp\left[\left(\frac{X}{2\alpha_x}\right) \bullet \left(1 - \sqrt{1 + \frac{4\lambda \bullet \alpha_x}{U}}\right)\right] \bullet erf\left[\frac{S_w}{4 \bullet \sqrt{\alpha_y \bullet X}}\right] \bullet erf\left[\frac{S_d}{2 \bullet \sqrt{\alpha_z \bullet X}}\right]$$

Site-Wide Parameters				
Parameter	**Symbol**	**Units**	**Source**	**Value**
Distance along the CL of the GW Plume Emanating from a Source	X	feet	Compliance Point	175
Distance along the CL of the GW Plume Emanating from a Source	X	cm	Compliance Point	5334
Longitudinal Dispersivity	α_x	cm	R16 - 0.10 * X	533.4
Transverse Dispersivity	α_y	cm	R17 - α_x / 3	177.8
Vertical Dispersivity	α_z	cm	R18 - α_x / 20	26.67
Specific Discharge	U	cm/d	R19 - K * I / θ_T	0.566329898
Aquifer Hydraulic Conductivity	K	cm/sec	MW-5 Slug Test	0.002659
Aquifer Hydraulic Conductivity	K	cm/d	MW-5 Slug Test	229.7376
Hydraulic Gradient	i	cm/cm	MW-5 ---> MW-34	0.00106
Total Soil Porosity	θ_T	cm^3/cm^3_{soil}	R23 - θ_{as} + θ_{ws}	0.43
Volumetric Water Content in Vadose Zone Soils	θ_{ws}	cm^3_{water}/cm^3_{soil}	TACO Default	0.3
Volumetric Air Content in Vadose Zone Soils	θ_{as}	cm^3_{air}/cm^3_{soil}	TACO Default	0.13
Source Width Perpendicular to Groundwater Flow Direction (horizontal plane)	S_w	feet	NE--> SW corner	500
Source Width Perpendicular to Groundwater Flow Direction (horizontal plane)	S_w	cm	NE--> SW corner	15240
Source Width Perpendicular to Groundwater Flow Direction (vertical plane)	S_d	feet	742.Table D	6.562
Source Width Perpendicular to Groundwater Flow Direction (vertical plane)	S_d	cm	742.Table D	200

Chemical-Specific Parameters				
Contaminant of Concern	**Source**	**C_{source} (mg/L)**	**λ, First Order Degradation Constant (d^{-1})**	**Source for λ**
Chemicals w/o Degradation Factors	MW-5	16.8	0	Default Value

Calculations				
Contaminant of Concern	**Source**	**$C_{(x)}$ (mg/L)**	**Groundwater Classification**	**GRO (mg/L)**
Chemicals w/o Degradation Factors - Iron	MW-5	4.910947023	Class I	5.0 mg/l

Tier 2 Modeling: Iron
Equation R26 - Dissolved Concentration along Centerline, C(x)
650 West 83rd Street
Chicago, IL

$$C_{(x)} = C_{source} \bullet \exp\left[\left(\frac{X}{2\alpha_x}\right) \bullet \left(1 - \sqrt{1 + \frac{4\lambda \bullet \alpha_x}{U}}\right)\right] \bullet erf\left[\frac{S_w}{4 \bullet \sqrt{\alpha_y \bullet X}}\right] \bullet erf\left[\frac{S_d}{2 \bullet \sqrt{\alpha_z \bullet X}}\right]$$

Site-Wide Parameters				
Parameter	**Symbol**	**Units**	**Source**	**Value**
Distance along the CL of the GW Plume Emanating from a Source	X	feet	Compliance Point	160
Distance along the CL of the GW Plume Emanating from a Source	X	cm	Compliance Point	4876.8
Longitudinal Dispersivity	α_x	cm	R16 - 0.10 * X	487.68
Transverse Dispersivity	α_y	cm	R17 - α_x / 3	162.56
Vertical Dispersivity	α_z	cm	R18 - α_x / 20	24.384
Specific Discharge	U	cm/d	R19 - K * I / θ_T	0.566329898
Aquifer Hydraulic Conductivity	K	cm/sec	MW-5 Slug Test	0.002659
Aquifer Hydraulic Conductivity	K	cm/d	MW-5 Slug Test	229.7376
Hydraulic Gradient	i	cm/cm	MW-5 ---> MW-34	0.00106
Total Soil Porosity	θ_T	cm^3/cm^3_{soil}	R23 - θ_{as} + θ_{ws}	0.43
Volumetric Water Content in Vadose Zone Soils	θ_{ws}	cm^3_{water}/cm^3_{soil}	TACO Default	0.3
Volumetric Air Content in Vadose Zone Soils	θ_{as}	cm^3_{air}/cm^3_{soil}	TACO Default	0.13
Source Width Perpendicular to Groundwater Flow Direction (horizontal plane)	S_w	feet	NE--> SW corner	500
Source Width Perpendicular to Groundwater Flow Direction (horizontal plane)	S_w	cm	NE--> SW corner	15240
Source Width Perpendicular to Groundwater Flow Direction (vertical plane)	S_d	feet	742.Table D	6.562
Source Width Perpendicular to Groundwater Flow Direction (vertical plane)	S_d	cm	742.Table D	200

Chemical-Specific Parameters				
Contaminant of Concern	**Source**	**C_{source} (mg/L)**	**λ, First Order Degradation Constant (d^{-1})**	**Source for λ**
Chemicals w/o Degradation Factors	MW-122	15.6	0	Default Value

Calculations				
Contaminant of Concern	**Source**	**$C_{(x)}$ (mg/L)**	**Groundwater Classification**	**GRO (mg/L)**
Chemicals w/o Degradation Factors - Iron	MW-122	4.965257623	Class I	5.0 mg/l

Tier 2 Modeling: Manganese
Equation R26 - Dissolved Concentration along Centerline, C(x)
650 West 83rd Street
Chicago, IL

$$C_{(x)} = C_{source} \bullet \exp\left[\left(\frac{X}{2\alpha_x}\right) \bullet \left(1 - \sqrt{1 + \frac{4\lambda \bullet \alpha_x}{U}}\right)\right] \bullet erf\left[\frac{S_w}{4 \bullet \sqrt{\alpha_y \bullet X}}\right] \bullet erf\left[\frac{S_d}{2 \bullet \sqrt{\alpha_z \bullet X}}\right]$$

Site-Wide Parameters				
Parameter	**Symbol**	**Units**	**Source**	**Value**
Distance along the CL of the GW Plume Emanating from a Source	X	feet	Compliance Point	500
Distance along the CL of the GW Plume Emanating from a Source	X	cm	Compliance Point	15240
Longitudinal Dispersivity	α_x	cm	R16 - 0.10 * X	1524
Transverse Dispersivity	α_y	cm	R17 - α_x / 3	508
Vertical Dispersivity	α_z	cm	R18 - α_x / 20	76.2
Specific Discharge	U	cm/d	R19 - K * I / θ_T	0.566329898
Aquifer Hydraulic Conductivity	K	cm/sec	MW-5 Slug Test	0.002659
Aquifer Hydraulic Conductivity	K	cm/d	MW-5 Slug Test	229.7376
Hydraulic Gradient	i	cm/cm	MW-5 ---> MW-34	0.00106
Total Soil Porosity	θ_T	cm^3/cm^3_{soil}	R23 - θ_{as} + θ_{ws}	0.43
Volumetric Water Content in Vadose Zone Soils	θ_{ws}	cm^3_{water}/cm^3_{soil}	TACO Default	0.3
Volumetric Air Content in Vadose Zone Soils	θ_{as}	cm^3_{air}/cm^3_{soil}	TACO Default	0.13
Source Width Perpendicular to Groundwater Flow Direction (horizontal plane)	S_w	feet	NE--> SW corner	500
Source Width Perpendicular to Groundwater Flow Direction (horizontal plane)	S_w	cm	NE--> SW corner	15240
Source Width Perpendicular to Groundwater Flow Direction (vertical plane)	S_d	feet	742.Table D	6.562
Source Width Perpendicular to Groundwater Flow Direction (vertical plane)	S_d	cm	742.Table D	200

Chemical-Specific Parameters				
Contaminant of Concern	**Source**	**C_{source} (mg/L)**	**λ, First Order Degradation Constant (d^{-1})**	**Source for λ**
Chemicals w/o Degradation Factors	MW-5	1.42	0	Default Value

Calculations				
Contaminant of Concern	**Source**	**$C_{(x)}$ (mg/L)**	**Groundwater Classification**	**GRO (mg/L)**
Chemicals w/o Degradation Factors - Manganese	MW-5	0.140438956	Class I	0.15 mg/l

Tier 2 Modeling: Manganese
Equation R26 - Dissolved Concentration along Centerline, C(x)
650 West 83rd Street
Chicago, IL

$$C_{(x)} = C_{source} \bullet \exp\left[\left(\frac{X}{2\alpha_x}\right) \bullet \left(1 - \sqrt{1 + \frac{4\lambda \bullet \alpha_x}{U}}\right)\right] \bullet erf\left[\frac{S_w}{4 \bullet \sqrt{\alpha_y \bullet X}}\right] \bullet erf\left[\frac{S_d}{2 \bullet \sqrt{\alpha_z \bullet X}}\right]$$

Site-Wide Parameters				
Parameter	**Symbol**	**Units**	**Source**	**Value**
Distance along the CL of the GW Plume Emanating from a Source	X	feet	Compliance Point	800
Distance along the CL of the GW Plume Emanating from a Source	X	cm	Compliance Point	24384
Longitudinal Dispersivity	α_x	cm	R16 - 0.10 * X	2438.4
Transverse Dispersivity	α_y	cm	R17 - α_x / 3	812.8
Vertical Dispersivity	α_z	cm	R18 - α_x / 20	121.92
Specific Discharge	U	cm/d	R19 - K * I / θ_T	0.566329898
Aquifer Hydraulic Conductivity	K	cm/sec	MW-5 Slug Test	0.002659
Aquifer Hydraulic Conductivity	K	cm/d	MW-5 Slug Test	229.7376
Hydraulic Gradient	i	cm/cm	MW-5 ---> MW-34	0.00106
Total Soil Porosity	θ_T	cm^3/cm^3_{soil}	R23 - θ_{as} + θ_{ws}	0.43
Volumetric Water Content in Vadose Zone Soils	θ_{ws}	cm^3_{water}/cm^3_{soil}	TACO Default	0.3
Volumetric Air Content in Vadose Zone Soils	θ_{as}	cm^3_{air}/cm^3_{soil}	TACO Default	0.13
Source Width Perpendicular to Groundwater Flow Direction (horizontal plane)	S_w	feet	NE--> SW corner	500
Source Width Perpendicular to Groundwater Flow Direction (horizontal plane)	S_w	cm	NE--> SW corner	15240
Source Width Perpendicular to Groundwater Flow Direction (vertical plane)	S_d	feet	742.Table D	6.562
Source Width Perpendicular to Groundwater Flow Direction (vertical plane)	S_d	cm	742.Table D	200

Chemical-Specific Parameters				
Contaminant of Concern	**Source**	**C_{source} (mg/L)**	**λ, First Order Degradation Constant (d^{-1})**	**Source for λ**
Chemicals w/o Degradation Factors	MW-122	2.94	0	Default Value

Calculations				
Contaminant of Concern	**Source**	**$C_{(x)}$ (mg/L)**	**Groundwater Classification**	**GRO (mg/L)**
Chemicals w/o Degradation Factors - Manganese	MW-122	0.14872962	Class I	0.15 mg/l

Tier 2 Modeling: Thallium
Equation R26 - Dissolved Concentration along Centerline, C(x)
650 West 83rd Street
Chicago, IL

$$C_{(x)} = C_{source} \bullet \exp\left[\left(\frac{X}{2\alpha_x}\right) \bullet \left(1 - \sqrt{1 + \frac{4\lambda \bullet \alpha_x}{U}}\right)\right] \bullet erf\left[\frac{S_w}{4 \bullet \sqrt{\alpha_y \bullet X}}\right] \bullet erf\left[\frac{S_d}{2 \bullet \sqrt{\alpha_z \bullet X}}\right]$$

Site-Wide Parameters				
Parameter	**Symbol**	**Units**	**Source**	**Value**
Distance along the CL of the GW Plume Emanating from a Source	X	feet	Compliance Point	300
Distance along the CL of the GW Plume Emanating from a Source	X	cm	Compliance Point	9144
Longitudinal Dispersivity	α_x	cm	R16 - 0.10 * X	914.4
Transverse Dispersivity	α_y	cm	R17 - α_x / 3	304.8
Vertical Dispersivity	α_z	cm	R18 - α_x / 20	45.72
Specific Discharge	U	cm/d	R19 - K * I / θ_T	0.566329898
Aquifer Hydraulic Conductivity	K	cm/sec	MW-5 Slug Test	0.002659
Aquifer Hydraulic Conductivity	K	cm/d	MW-5 Slug Test	229.7376
Hydraulic Gradient	i	cm/cm	MW-5 ---> MW-34	0.00106
Total Soil Porosity	θ_T	cm^3/cm^3_{soil}	R23 - θ_{as} + θ_{ws}	0.43
Volumetric Water Content in Vadose Zone Soils	θ_{ws}	cm^3_{water}/cm^3_{soil}	TACO Default	0.3
Volumetric Air Content in Vadose Zone Soils	θ_{as}	cm^3_{air}/cm^3_{soil}	TACO Default	0.13
Source Width Perpendicular to Groundwater Flow Direction (horizontal plane)	S_w	feet	NE--> SW corner	500
Source Width Perpendicular to Groundwater Flow Direction (horizontal plane)	S_w	cm	NE--> SW corner	15240
Source Width Perpendicular to Groundwater Flow Direction (vertical plane)	S_d	feet	742.Table D	6.562
Source Width Perpendicular to Groundwater Flow Direction (vertical plane)	S_d	cm	742.Table D	200

Chemical-Specific Parameters				
Contaminant of Concern	**Source**	**C_{source} (mg/L)**	**λ, First Order Degradation Constant (d^{-1})**	**Source for λ**
Chemicals w/o Degradation Factors	MW-122	0.01	0	Default Value

Calculations				
Contaminant of Concern	**Source**	**$C_{(x)}$ (mg/L)**	**Groundwater Classification**	**GRO (mg/L)**
Chemicals w/o Degradation Factors - Thallium	MW-122	0.00172926	Class I	0.002 mg/l

ILLINOIS ENVIRONMENTAL PROTECTION AGENCY

1021 NORTH GRAND AVENUE EAST, P.O. BOX 19276, SPRINGFIELD, ILLINOIS 62794-9276 • (217) 782-2829
BRUCE RAUNER, GOVERNOR LISA BONNETT, DIRECTOR

217-524-3300

August 20, 2015

Ms. Sarah Rubin
City of Chicago,
Department of Fleet and Facility Management (2FM)
30 North LaSalle Street, 3rd Floor
Chicago, Illinois 60602-2575

IEPA-DIVISION OF RECORDS MANAGEMENT
RELEASABLE

SEP 14 2015

REVIEWER: JKS

Re: 0316715228 /Cook County
Chicago/City of Chicago-Dept. of Fleet Mgmt.
Site Remediation/Technical Reports

Dear Ms. Rubin:

The Illinois Environmental Protection Agency (Illinois EPA) has received the *Comprehensive Site Investigation Report, Remediation Objectives Report, Remedial Action Plan* (CSIR/ROR/RAP Report dated May 29, 2015/Log No. 15-59594). The Illinois EPA approves of the CSIR/ROR/RAP Report with the following condition.

The location and dimensions of the SMZ should be provided in a RAP Update.

You can call me at 217-534-4823 or mail me at tim.murphy@illinois.gov should you have any questions.

Sincerely,

Timothy J. Murphy

Timothy J. Murphy
Voluntary Site Remediation Unit
Remedial Project Management Section
Bureau of Land

TJM:tjm N:\BOL\RPMS\SRP\PROJECT MANAGERS\MURPHY\CITY OF CHICAGO - DEPT OF FLEET MGMT\15CSIRORAP.DOC

cc: Richard O'Brien, P.E.
Terracon Consultants, Inc.
650 W. Lake Street, Suite 650
Chicago, IL 60661Scott Myers

ATTACHMENT 14
GEOTECHNICAL REPORT

Terracon GeoReport

Geotechnical Engineering Report – Revision 1

Green Era Biotechnology Plant

Chicago, Illinois

October 22, 2018

Terracon Pro ect No. MR175403R1

Prepared for:

Green Era Educational NFP

Chicago, Illinois

Prepared by:

Terracon Consultants, Inc.

Chicago, Illinois

October 22, 2018

Green Era Educational NFP
218 North Jefferson Street, Suite 300
Chicago, Illinois 60661

Attn: Mr. Jason Feldman

Re: Geotechnical Engineering Report – Revision 1
Green Era Biotechnology Plant
650 West 83rd Street
Chicago, Illinois
Terracon Pro ect No. MR175403R1

Dear Mr. Feldman:

We have completed the Geotechnical Engineering services for the above referenced pro ect. This study was performed in general accordance with our proposal number PMR175403R1 dated October 24, 2017 and our subse uent change order dated September 19, 2018. This report presents the findings of the subsurface e ploration and provides geotechnical recommendations concerning earthwor and the design and construction of foundations and floor slabs for the proposed pro ect.

We appreciate the opportunity to be of service to you on this pro ect. If you have any uestions concerning this report, or if we may be of further service, please contact us.

Sincerely,
Terracon Consultants, Inc.

Nathan J. Liggett, P.E.
Pro ect Engineer

Tony A. Kiefer, P.E.
Senior Geotechnical Consultant

REPORT TOPICS

INTRODUCTION 1
SITE CONDITIONS 1
PROJECT DESCRIPTION 2
GEOTECHNICAL CHARACTERIZATION 3
GEOTECHNICAL OVERVIEW 5
EARTHWORK 7
SHALLOW FOUNDATIONS 11
AGGREGATE PIERS 13
DEEP FOUNDATIONS 14
FLOOR SLABS 19
LATERAL EARTH PRESSURES 21
PAVEMENTS 22
SEISMIC CONSIDERATIONS 25
GENERAL COMMENTS 25

Note: Orange Bold te t in the report indicates a referenced section heading. The PDF version also includes hyperlin s which direct the reader to that section and clic ing on the logo in the top right corner will bring you bac to this page.

ATTACHMENTS

EXPLORATION AND TESTING PROCEDURES
SITE LOCATION AND EXPLORATION PLAN
EXPLORATION RESULTS (Boring Logs and Roc Core Photos)
CONSOLIDATION TEST DATA
SUPPORTING INFORMATION (General Notes)

Geotechnical Engineering Report – Revision 1

Green Era Biotechnology Plant
650 West 83rd Street
Chicago, Illinois

Terracon Project No. MR175403R1
October 22, 2018

INTRODUCTION

This report presents the results of our subsurface e ploration and geotechnical engineering services performed for the proposed bio-technology plant to be located at 650 West 83rd Street in Chicago, Illinois. The purpose of these services is to provide information and geotechnical engineering recommendations relative to:

- Subsurface soil (and roc) conditions
- Groundwater conditions
- Site preparation and earthwor
- Dewatering considerations
- E cavation considerations
- Foundation design and construction
- Floor slab design and construction
- Seismic site classification per IBC
- Lateral earth pressures
- Pavement design parameters

The geotechnical engineering scope of services for this pro ect included the advancement of twenty (20) geotechnical borings to depths ranging from appro imately 15 to 59 feet below e isting site grade. Borings B-1 to B-11 were performed during November 2017. Nine (9) additional borings were then re uested following changes to the site layout, resulting in Borings B-12 to B-20 being performed in October 2018.

Maps showing the site and boring locations are shown in the **Site Location** and **Exploration Plan** sections, respectively. The results of the laboratory testing performed on soil samples obtained from the site during the field e ploration are included in the **Exploration Results** section of this report.

SITE CONDITIONS

The following description of site conditions is derived from our site visit in association with the field e ploration and our review of publicly available geologic and topographic maps.

Item	Description
Parcel Information	The pro ect is located at 650 West 83rd Street in Chicago, Illinois. See **Site Location**
Existing Improvements	Historically, this site was the location of a former International Harvester manufacturing facility from appro imately 1920 to 1940. All former structures have since been demolished. From about 1960 to 2010, the site was utili ed as a former Chicago Police Department Impound Lot. The lot is currently vacant.
Current Ground Cover	Gravel/soil/mulch surface. Numerous areas of standing water were observed at the time of our initial field e ploration.
Existing Topography	Based upon our site visit and review of the topographic survey, the site is relatively level with surface elevations ranging from 13 to 17 feet (CCD).

PROJECT DESCRIPTION

Our final understanding of the pro ect conditions is as follows:

Item	Description
Project Description	The pro ect will consist of the construction of a new bio-technology plant.
Proposed Development	The structures are anticipated to be constructed in phases, as detailed on the E ploration Plan. Phase 1 will include a high-bay warehouse/office building that will encompass appro imately 26,875 s uare feet (SF), a digester tan (up to 75-foot diameter), a bio-mass tan s (up to 35-foot diameter), and miscellaneous e uipment pads. Phase 2 may include a 12,625 SF addition to the high-bay warehouse area and an additional digester and bio-mass tan . Associated pavements, drives, storm water pond, and community green space will also be constructed as re uired.
Building Construction	It is anticipated that all structures will be steel framed.
Finished Floor Elevation (FFE)	Appro imately 18 feet (CCD).
Maximum Loads (verified by MKB)	■ Columns: 250 ips ma imum ■ Walls: 4 to 6 ips per linear foot ma imum ■ Floor Slabs: 150 pounds per s uare foot ma imum ■ Tan Base Slabs: Up to 3,000 pounds per s uare foot (psf)

Item	Description
Grading/Slopes	■ The FFE of the proposed building is anticipated to be appro imately 2-feet above e isting grade. The area of proposed tan s, pavements, and drives is anticipated to have minimal grading. ■ A raised green area e tending appro imately 5 feet above e isting grade to Elev. 21 feet is also planned for a community garden on the east portion of the site. ■ The proposed detention basin at the southeast corner of the site is anticipated to be cut down to Elev. 10 feet, which is appro imately 4-feet below e isting grade.
Below Grade Structures	None anticipated
Free-Standing Retaining Walls	■ Loading doc walls for the proposed structure is anticipated to be appro imately 4 feet tall. ■ A 5-foot retaining wall may be constructed on the south end of the proposed raised green area to provide an overloo of the detention basin to the south.
Below Grade Areas	None anticipated
Pavements	We assume both rigid (concrete) and fle ible (asphalt) pavement sections will be considered.

GEOTECHNICAL CHARACTERIZATION

Subsurface Profile

We have developed a general characteri ation of the subsurface soil and groundwater conditions based upon our review of the data and our understanding of the geologic setting. The geotechnical characteri ation forms the basis of our geotechnical calculations and evaluation of site preparation, foundation options and pavement options. As noted in **General Comments**, the characteri ation is based upon widely spaced e ploration points across the site, and variations are li ely.

Subsurface conditions at the boring locations can be generali ed as follows:

Stratum	Approximate Depth to Bottom of Stratum (feet)	Material Description	Consistency/Density
1	4 to 7	Urban fill consisting of varying amounts of sand, gravel, clay, bric , wood, and organics	N/A
2	8 to 9	Silty sand (SM)	Loose, wet

Stratum	Approximate Depth to Bottom of Stratum (feet)	Material Description	Consistency/Density
3	18 to 22	Lean clay (CL)	Soft to medium-stiff Water Content: 21 to 29
4	40 to 42	Lean clay (CL) to silty clay (CL/ML)	Very stiff to hard Water content: 12 to 16
5	48 to 50	Silt (ML) and silty clay (CL/ML)	Very dense
6	Below 48 to 50 feet	Dolomite bedroc	Moderate strength, slightly weathered to unweathered

Conditions encountered at each boring location are indicated on the individual boring logs shown in the **Exploration Results** section and are attached to this report. Stratification boundaries on the boring logs represent the appro imate location of changes in native soil types in situ, the transition between materials may be gradual.

Groundwater Conditions

The boreholes were observed while drilling and after completion for the presence and level of groundwater. In addition, a monitoring well (MW-4) was installed ad acent to boring B-4 to allow for long-term readings groundwater levels within the fill. The water levels observed in the boreholes can be found on the boring logs in **Exploration Results**, and are summari ed below.

Boring Number	Approximate Depth to Groundwater while Drilling (feet) [1]	Approximate Depth to Groundwater after Drilling (feet) [1]
B-1	1.5	Not obtained due to drilling fluids
B-2	7	Not obtained due to drilling fluids
B-3	2	Not obtained due to drilling fluids
B-4 (MW-4)	1.5	2 (after drilling) 5.5 (on 12/8/2017)
B-5	1.5	3
B-6	2.5	8
B-7	3.5	7
B-8	2	8
B-9	2	6
B-10	2.5	7
B-11	2.5	4
B-12	9	20

Boring Number	Approximate Depth to Groundwater while Drilling (feet) [1]	Approximate Depth to Groundwater after Drilling (feet) [1]
B-13	None encountered prior to addition of drilling fluid	Not obtained due to drilling fluids
B-14	6	15
B-15	11	Not obtained due to drilling fluids
B-16	11	20
B-17	8	11
B-18	11.5	8
B-19	7	Not obtained due to drilling fluids
B-20	7	17

1. Below ground surface

At the time of the initial field e ploration (Borings B-1 to B-11) between November 27th and 29th, 2017, standing water was present at the surface across most of the site. An additional site visit was performed by a Terracon field engineer to obtain a water level reading in MW-4 on December 8, 2017. At the time of this additional site visit, standing water was not observed on the site.

Subse uent borings (B-12 to B-20) were performed in October 2018. At the time of this subse uent e ploration, standing water was not present at the site.

As such, Terracon believes that the standing water present during the initial drilling operations was the result of a perched water above the fill, which subse uently infiltrated into the ground prior to the additional wor . Terracon recommends a long-term groundwater level of 5 feet below e isting grade.

Groundwater level fluctuations occur due to seasonal variations in the amount of rainfall, runoff and other factors not evident at the time the borings were performed. Therefore, groundwater levels during construction or at other times in the life of the structure may be higher or lower than the levels indicated on the boring logs. The possibility of groundwater level fluctuations should be considered when developing the design and construction plans for the pro ect.

GEOTECHNICAL OVERVIEW

The near surface, clayey fill could become unstable with typical earthwor and construction traffic, especially after precipitation events. If possible, the grading should be performed during the warmer and drier time of the year. If grading is performed during the wetter months, there may be an increased ris for possible undercutting and replacement of unstable subgrade. Additional site preparation recommendations including subgrade improvement and fill placement are provided in the **Site Preparation** section.

The **Shallow Foundations** section addresses support of the building(s) bearing on native medium-stiff lean clay or engineered fill e tending to native lean clay. Shallow foundations supporting column loading up to 100 ips can be proportioned for a net allowable bearing pressure of 2,500 psf when bearing on a minimum 3-foot thic layer of compacted engineered fill. New engineered fill must e tend below the e isting undocumented fill. Footings supported directly on the medium-stiff lean clay or lean concrete e tending to the native lean clay can be proportioned for a net allowable bearing pressure of 1,500 psf.

For column loadings greater than 100 ips, alternate foundation support will need to be considered due to the greater one of influence resulting from the larger footing si es. Consideration could be given to improving sub-grade in place with rammed aggregate piers, as noted in the **Specialty Foundations** section. Alternatively, these foundations could also be supported on belled drilled shafts or auger-cast piles (ACIPs), as discussed in the **Deep Foundations** section.

The digester tan s and bio-mass tan s should not be supported directly on the medium-stiff clay or engineered fill. We recommend that these structures be supported on a structural mat bearing on an improved subgrade consisting of aggregate piers, as noted in the **Specialty Foundations** section. Alternatively, these structures could also be supported on a series of belled drilled shafts or auger-cast piles (ACIPs) structurally connected to the tan mat foundation, as discussed in the **Deep Foundations** section.

Floor slabs may be grade supported provided that certain measures are ta en, and assuming that the site grades will not be raised. Any organic, soft, or loose material should be removed from the proposed area. The newly e posed subgrade should then be proofrolled as detailed in the **Earthwork** section. Any areas e hibiting e cessive rutting or deflection should be undercut and replaced with compacted engineered fill. Following proofrolling, we recommend that a minimum 6-inch thic granular leveling course be placed directly below the slab to provide uniform support.

Support of floor slabs and pavements on or above e isting fill materials is discussed in this report. However, even with the recommended construction procedures, there is an inherent ris for the owner that compressible fill or unsuitable material within or buried by the fill will not be discovered. This ris of unforeseen conditions cannot be eliminated without completely removing the e isting fill, but can be reduced by following the recommendations contained in this report. To ta e advantage of the cost benefit of not removing the entire amount of undocumented fill, the owner must be willing to accept the ris associated with building over the undocumented fills following the recommended rewor ing of the material.

The **General Comments** section provides an understanding of the report limitations.

EARTHWORK

Earthwor will include clearing and grubbing, e cavations and fill placement. The following sections provide recommendations for use in the preparation of specifications for the wor . Recommendations include critical uality criteria as necessary to render the site in the state considered in our geotechnical engineering evaluation for foundations, floor slabs, and pavements.

Site Preparation

Prior to placing new fill, any organic matter or otherwise unsuitable material should be removed from the site limits. Following stripping of surface materials and prior to placing new engineered fill, the e posed soils should be observed and tested by Terracon. A Terracon representative should observe proofrolling of the e posed soils. Proofrolling can be accomplished using a loaded tandem-a le dump truc with a gross weight of at least 25 tons, or similarly loaded e uipment. Areas that display e cessive deflection (pumping) or rutting during proofroll operations should be improved by scarification/compaction or by removal and replacement with engineered fill.

All e isting utilities, if present, should also be properly abandoned and/or relocated. This should include removal of all poorly compacted trench bac fill e tending into the proposed building area. In addition, care should be ta en by contractors to protect all e isting improvements to remain, such as pavements and utilities. E cavations created by demolition and removal of e isting features should be bac filled with engineered fill that is placed and compacted as recommended in this report.

Existing Fill

As noted in **Geotechnical Characterization**, e isting fill to depths ranging from about 4 to 7 feet. The fill appears to have been placed in an uncontrolled manner. Support of floor slabs and pavements on or above e isting fill soils is discussed in this report. However, even with the recommended construction procedures, there is an inherent ris for the owner that compressible fill or unsuitable material within or buried by the fill will not be discovered. This ris of unforeseen conditions cannot be eliminated without completely removing the e isting fill, but can be reduced by following the recommendations contained in this report.

Fill Material Types

It is e pected that most of the inorganic sandy or cohesive site soils located below the fill material are too soft and wet to be useful as site fill material. E cessive drying or rewor ing would be needed to use e isting site soils. Engineered fill for the pro ect should meet the following material property re uirements:

Fill Type [1, 2]	USCS Classification	Acceptable Locations for Placement
Cohesive	CL [3], CL/ML [3], ML [3] (LL ≤ 45 and PI ≤ 20)	Ad acent to footings Below/ad acent to floor slabs and pavement
Granular	GW, GP, GM, GC SW, SP, SM, SC	Below/ad acent to footings, floor slabs, and pavement
Unsuitable	CL/CH [4], CH [4], MH [4], OL, OH [4], PT	non-structural locations

1. Engineered fill should consist of approved materials that are free of organic matter and debris. Fro en material should not be used, and fill should not be placed on a fro en subgrade. A sample of each material type should be submitted to Terracon for evaluation prior to use on this site.
2. Any organic materials, roc fragments larger than 3 inches, and other unsuitable materials should be removed prior to use as engineered fill.
3. These materials can be highly susceptible to frost heave and are unstable when wet, yet are commonly used for pavement support with the nowledge that additional maintenance and/or shorter pavement life are li ely.
4. High plasticity. Not recommended beneath movement sensitive features such as foundations, floor slabs, or pavements.

Fill Compaction Requirements

Engineered fill should meet the following compaction re uirements.

Item	Description
Maximum fill lift thickness	■ 9 inches or less in loose thic ness when heavy, self-propelled compaction e uipment is used ■ 6 inches or less in loose thic ness when hand-guided e uipment (i.e. umping ac or plate compactor) is used
Minimum compaction requirements [1, 2, 3]	■ 95 of the modified Proctor (ASTM Standard D-1557) ma imum dry density below foundations and within 1 foot of finished pavement subgrade elevation the compaction effort should e tend laterally beyond the foundations at least 8 inches for every foot of fill placed below the foundation elevation ■ 92 below floor slabs, and more than 1 foot below finished pavement subgrade
Moisture content range [1]	■ within 2 below to 4 above the modified Proctor optimum moisture content at the time of placement and compaction ■ granular materials should be compacted within wor able moisture levels

Item	Description
1.	We recommend that engineered fill be tested for moisture content and compaction during placement. Should the results of the in-place density tests indicate the specified moisture or compaction limits have not been met, the area represented by the test should be rewor ed and retested as re uired until the specified moisture and compaction re uirements are achieved.
2.	If the granular material is a coarse sand, crushed limestone, or gravel, is of a uniform si e, or has a low fines content, compaction comparison to relative density (ASTM D 4253 and D 4254) may be more appropriate. In this case, granular materials should be compacted to at least 60 and 65 of the ma imum relative density for the 92 and 95 modified Proctor recommendations, respectively.
3.	Specifically, moisture levels should be maintained to achieve compaction without bul ing during placement or pumping when proofrolled.

Utility Trench Backfill

For low permeability subgrades, utility trenches are a common source of water infiltration and migration. Utility trenches penetrating beneath the building should be effectively sealed to restrict water intrusion and flow through the trenches, which could migrate below the building. The trench should provide an effective trench plug that e tends at least 5 feet from the face of the building e terior. The plug material should consist of cementitious flowable fill or low permeability clay. The trench plug material should be placed to surround the utility line. If used, the clay trench plug material should be placed and compacted to comply with the water content and compaction recommendations for structural fill stated previously in this report.

Grading and Drainage

During construction, grades should be developed to direct surface water flow away from or around the site. E posed subgrades should be sloped to provide positive drainage so that saturation of subgrades is avoided. Surface water should not be permitted to accumulate on the site.

Final grades should slope away from the building to promote rapid surface drainage. Accumulation of water ad acent to the building could contribute to significant moisture increases in the subgrade soils and subse uent softening/settlement. Roof drains should discharge into a storm sewer or several feet away from the building.

Earthwork Construction Considerations

We recommend that a Terracon geotechnical engineer or ualified representative be retained during the construction phase of the pro ect to observe earthwor and to perform necessary tests and observations during stripping of topsoil, subgrade preparation, placement and compaction of controlled compacted fills, bac filling of e cavations, and ust prior to construction of building floor slabs.

Upon completion of filling and grading, care should be ta en to maintain the moisture content of the subgrade soils prior to construction of floor slabs. The site should also be graded to prevent

ponding of surface water on the prepared subgrades or in e cavations. Any water that collects over or ad acent to construction areas should be promptly removed. If the subgrade should become fro en, desiccated, saturated, or disturbed, the affected material should be removed or these materials should be scarified, moisture conditioned, and recompacted prior to floor slab construction and observed by Terracon.

Care should be ta en to avoid disturbance of prepared subgrade soils. The near surface native and e isting fill soils have elevated moisture contents, and are very easily disturbed, especially by construction traffic. Construction traffic should not operate directly on saturated or low strength soils. If the subgrade becomes saturated, desiccated, or disturbed, the affected materials should either be scarified and compacted, or be removed and replaced as previously discussed. Subgrades should be observed and tested by Terracon prior to construction.

E cavations for footing foundations (if utili ed) is e pected to e tend below the upper fill materials and bear on the native silty sand or medium-stiff clay encountered between 7 and 8 feet below grade. Based on conditions encountered at the boring locations, e cavations for footing foundations are li ely to encounter the water table. If seepage is encountered, the contractor is responsible for employing appropriate dewatering methods to control seepage and facilitate construction. In our e perience, dewatering of e cavations one to two feet below the water table can typically be accomplished with sump pits and pumps. Groundwater levels should be maintained at least 2-feet below the base of e cavation during construction. However, if large amounts of water infiltration is encountered, e tensive dewatering efforts consisting of multiple well points may be re uired. Alternatively, a groundwater cut-off consisting of interloc ing steel sheet piling embedded into the underlying clay could be utili ed. The steel sheet piling could also function as a temporary earth retention system for the e cavation, if desired.

As a minimum, e cavations should be performed in accordance with OSHA 29 CFR, Part 1926, Subpart P, “Excavations” and its appendices, as well as other applicable codes, and in accordance with any applicable local, state, and federal safety regulations. The contractor should be aware that slope height, slope inclination, and e cavation depth should in no instance e ceed those specified by these safety regulations. The e isting fill and native soils in the upper 20 feet of the soil profile are considered Type “C” soils under the OSHA regulations. Maximum slope inclinations for Type “C” soils under the OSHA regulations is 1.5H:1V. Flatter slopes than those dictated by these regulations may be re uired depending upon the soil conditions encountered and other e ternal factors. These regulations are strictly enforced and if they are not followed, the owner, the contractor, and/or earthwor and utility subcontractor could be liable and sub ect to substantial penalties. Under no circumstances should the information provided in this report be interpreted to mean that Terracon is responsible for construction site safety or the contractor’s activities. Construction site safety is the sole responsibility of the contractor who shall also be solely responsible for the means, methods, and se uencing of the construction operations.

SHALLOW FOUNDATIONS

It is our opinion that relatively lightly loaded structures (column loading less than 100 ips) can be supported on spread foundations bearing on the native medium-stiff lean clay soils encountered between 7 and 9 feet below e isting grade, or on engineered soil fill or lean concrete e tending to suitable native bearing soils.

The footings should not be supported on the e isting fill materials due to the lac of documentation available regarding the placement/compaction methods used for these soils and the variability observed in the field test data. The foundations will need to be e tended through the undocumented fill and supported on the native medium-stiff lean clay. The footings could then be supported at this lower elevation, or the undercut could be bac filled to the design footing elevation with engineered soil fill or lean concrete.

For column loadings greater than 100 ips, alternate foundation support will need to be considered due to the greater one of influence resulting from the larger footing si es. Consideration could be given to improving sub-grade in place with rammed aggregate piers, as noted in the **Specialty Foundations** section. Alternatively, these foundations could also be supported on belled drilled shafts or auger-cast piles e tending to the very stiff to hard lean clay encountered below appro imately 20 feet, as discussed in the **Deep Foundations** section.

The digester tan s and bio-mass tan s should not be supported directly on the medium-stiff clay or engineered fill. We recommend that these structures be supported on a structural mat bearing on an improved subgrade consisting of aggregate piers, as noted in the **Specialty Foundations** section. Alternatively, these structures could also be supported on a series of belled drilled shafts or auger-cast piles e tending to the very stiff to hard lean clay encountered below appro imately 20 feet and structurally connected to the tan s mat foundation, as discussed in the **Deep Foundations** section.

Design Parameters

Item	Description
Maximum Net Allowable Bearing pressure [1, 2, 6]	**1,500 psf –** (foundations bearing directly on the medium-stiff native clay or sand or lean concrete e tending to native soils.) **2,500 psf –** (foundation bearing on at least 3 feet of granular engineered fill e tending down to the native sand or clay.)
Minimum Foundation Dimensions	Columns: 30 inches Continuous: 18 inches

Item	Description
Ultimate Coefficient of Sliding Friction [3]	0.35 (cohesive material) 0.45 (granular material)
Minimum Embedment below Finished Grade [4]	3.5 feet
Estimated Total Settlement from Structural Loads [2, 5]	Appro imately 1 inch
Estimated Differential Settlement [5]	About 2/3 of total settlement

1. The ma imum net allowable bearing pressure is the pressure in e cess of the minimum surrounding overburden pressure at the footing base elevation. An appropriate factor of safety has been applied. These bearing pressures can be increased by 1/3 for transient loads unless those loads have been factored to account for transient conditions.
2. Assumed final site grade is not raised more than 2 feet from e isting conditions.
3. Can be used to compute sliding resistance where foundations are placed on suitable soil/materials. Should be neglected for foundations sub ect to net uplift conditions.
4. Embedment necessary to minimi e the effects of frost and/or seasonal water content variations. For sloping ground, maintain depth below the lowest ad acent e terior grade within 5 hori ontal feet of the structure. Interior footings in heated structures can be supported at a higher elevation.
5. Foundation settlements will depend upon the variations within the subsurface soil profile, the structural loading conditions, the embedment depth of the footings, the thic ness of engineered fill, and the uality of the earthwor operations and footing construction, fre uent control oints should be provided for walls.

Uplift resistance of spread footings can be developed from the effective weight of the footing and the overlying soils. A ma imum total unit weight of 120 pcf should be used for the bac fill. This unit weight should be reduced to 60 pcf for portions of the bac fill or natural soils below the groundwater elevation.

Foundation Construction Considerations

Foundations e tended below the fill material will encounter the shallow perched water level. Thus, construction difficulties will result re uiring dewatering. Also, the loose saturated sand below the fill material will be highly susceptible to disturbance. Thus, it is li ely that this thin, water-bearing layer would need to be removed to e tend new fill to the underlying medium clay surface. The medium clay is also highly susceptible to disturbance thus vehicle traffic should not occur on the e posed subgrade.

The soils at the base of each foundation e cavation should be observed and tested by Terracon to evaluate whether they meet the re uirements for suitable bearing soils as defined in this report. The e cavations should be probed or otherwise sampled at regular intervals.

The base of each foundation e cavation should be free of water and loose materials prior to placing concrete. Concrete should be placed as soon after e cavating as possible to reduce

bearing soil disturbance. If the soils at the bearing level become e cessively dry, disturbed, saturated, or fro en, the affected soil should be removed prior to placing concrete. Placement of a lean concrete mud-mat over the bearing soils should be considered if the e cavations must remain open overnight or for an e tended period of time.

Footings should bear directly on tested and approved native lean clay or sand soils or on new engineered granular fill e tending a minimum of three feet below the proposed footing bearing elevation. If unsuitable soils are encountered at the design footing level, the footing e cavations should be e tended deeper to reach suitable bearing materials.
Where engineered fill will be placed to support the footings, the e cavations should be widened at least 8 inches beyond each footing edge for every foot of new fill placed below the design footing base elevation. The overe cavated depth should then be bac filled up to the foundation base elevation with an approved fill material that is placed in lifts and compacted to at least 95 of the modified Proctor ma imum dry density. We recommend that bac fill materials consist of those materials identified in the **Earthwork** section. The recommended e tents of the over-e cavation and bac fill procedure are illustrated in the following figures.

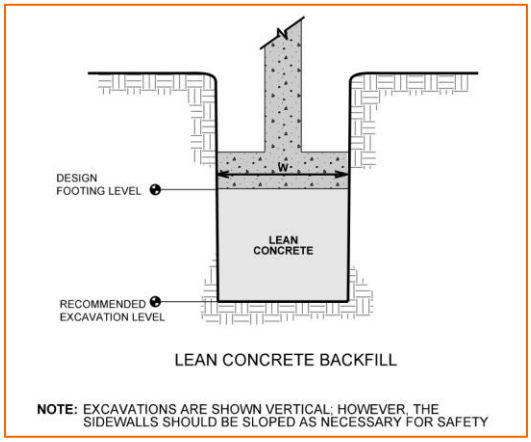

LEAN CONCRETE BACKFILL

NOTE: EXCAVATIONS ARE SHOWN VERTICAL; HOWEVER, THE SIDEWALLS SHOULD BE SLOPED AS NECESSARY FOR SAFETY

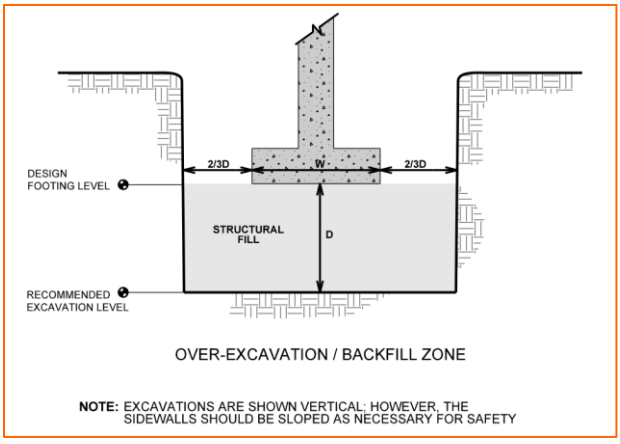

OVER-EXCAVATION / BACKFILL ZONE

NOTE: EXCAVATIONS ARE SHOWN VERTICAL; HOWEVER, THE SIDEWALLS SHOULD BE SLOPED AS NECESSARY FOR SAFETY

AGGREGATE PIERS

Heavily loaded columns and the large tan foundations could also be supported on typical shallow foundations (spread footings or structural mat) bearing over a system of aggregate piers. Aggregate piers are an intermediate design-build soil reinforcement system that is commonly used to support structures as an alternative to soil over-e cavation. The system allows the use of conventional spread footings or large mat slabs bearing at typical frost depth, and typically provides settlement control to within 1-inch or less.

Aggregate piers are installed by densifying lifts of aggregate into a cavity that is created by either drilling or displacement methods. Densification ta es place with a high-energy beveled tamper

or vibratory probe that both densifies the aggregate and forces the aggregate laterally into the sidewalls of the hole. This action increases the lateral stress in surrounding soil, thereby further stiffening the stabili ed composite soil mass. The result of aggregate pier installation is a significant strengthening and stiffening of subsurface soils that then support the mat slabs and conventional shallow spread footings. We recommend that the individual aggregate pier elements e tend through the e isting fill and soft to medium-stiff lean clay soils encountered in the upper 20 feet of the soil profile and terminate in the underlying very stiff to hard native clay and silty clay. The use of the displacement or drilling method is at the discretion of a design-build aggregate pier contractor.

Aggregate pier designs are based on a two-layer settlement analysis. Settlements within the "upper zone" (zone of soil that is reinforced with aggregate pier elements) are computed using a weighted modulus method that accounts for the stiffness of the aggregate pier elements, the stiffness of the matri soil, and the area coverage of aggregate pier elements below supported footings. Settlements within the "lower zone" (zone of soils beneath the upper one which receives lower intensity footing stresses) are computed using conventional geotechnical settlement methods.

After reinforcement with the aggregate pier system, the building foundations may be designed as a conventional spread footing, si ed for an allowable bearing pressure on the order of 4,000 psf. The above estimate should be considered preliminary and is based on our past e perience with aggregate pier systems in similar soils. The allowable bearing pressure will vary depending on the si e, installation methods and spacing of the individual piers. Thus, the actual allowable bearing pressure used in footing design should be developed by an e perienced design-build aggregate pier contractor based on the actual pier geometry to be used for construction. We are able to provide a list of ualified aggregate pier design-build contractors at your re uest.

If the aggregate pier system is selected, uality assurance testing should be performed during installation, including documentation of the soil conditions encountered, the shaft lengths, amount of aggregate used, and tests on the completed aggregate pier elements. Terracon can provide these services if re uested.

DEEP FOUNDATIONS

Belled Caisson Design Parameters

Based on the information obtained from the borings, a ma imum net allowable end bearing pressure of 15,000 pounds per s uare foot (psf) can be used for belled caissons bearing in the hard silty clay soils in the depth range of a 25 to 30 feet below e isting grade. Belled caissons should not e tend below 35 feet due to the underlying granular soils that could be encountered.

The ma imum net allowable soil bearing pressure is that pressure which may be transmitted to the foundation soils in e cess of the minimum surrounding overburden pressure.

The design bearing capacity values may be increased by 1/3 for intermittent loading such as wind and seismic loads. Per the City of Chicago Building Code, caisson side friction is not allowed for design of belled caissons designed for end bearing in the hardpan.

To resist tension forces, caissons can be designed to include full length, tied reinforcement to the bottom of the bell. Uplift resistance can be determined using one of the following two methods:

1. By computing the buoyant unit weight of the combined caisson and soil cylinder e ual to the bell diameter multiplied by the caisson length.

2. By computing the soil shear strength mobili ed on a cylinder e ual to the bell diameter to the height of the bell and adhesion between the soil and the concrete along the shaft above the top of the bell plus the buoyant weight of the caisson concrete.

For uplift design purposes, average ultimate values of 500 psf can be assumed for the shear resistance between depths of 5 to 20 feet, and 1,500 psf below a depth of 20 feet. Shear resistance above a depth of 5 feet should be ignored due to disturbance from frost and construction activities. The caisson uplift capacity, to resist transient loads such as wind or seismic loading, should be based on a factor of safety of at least 1.5. A minimum factor of safety of 2.0 should be used for permanent loading conditions.

Belled shafts may be spaced so that the minimum distance between bell edges are at least one foot. A minimum shaft diameter of 30 inches should be used. Foundation elements at a structure's perimeter and below any unheated areas, such as grade beams and pile caps, should e tend at least 3 feet below grade for frost protection. A minimum shaft diameter of at least 30 inches is recommended. The caisson bells should have a base angle no flatter than 60 degrees from the hori ontal and the bell diameter should not e ceed three times the shaft diameter.

Post-construction settlements of drilled shafts designed and constructed as described in this report are estimated to be appro imately inch. Differential settlement between individual shafts is e pected to be to ⅔ of the total settlement.

Drilled Shaft Construction Considerations

To limit the potential problems with drilled shaft installation, we recommend that an e perienced drilled shaft technician with Terracon be on site to ma e decisions on the belling elevation. To limit problems, caissons should be completed and poured as uic ly as possible with concrete waiting on site as the bell is completed.

We recommend temporary casing be used when the drilled shafts are installed through the e isting fill materials encountered to depths of appro imately 9 feet below grade. Temporary casing would need to e tend a few feet into the underlying native lean clay to create a seal against soil caving and possible ground water seepage.

Soft clay was found at the site typically in the depth range of about 10 to 20 feet below grade. Our e perience has shown that clay s uee e is a concern when water content e ceeds 30 percent. Based on the results of our field and laboratory testing, s uee e is not anticipated to occur for shaft diameters less than 3.5 feet.

If significant sand seams or water-bearing silt seams are encountered at the bell elevation, the shaft may have to be e tended deeper below this one to facilitate belling. Uncased shaft e cavations should not be allowed to remain open overnight. Bells should not e tend below 35 feet in depth so that the possibility of water infiltration from the lower silt layers is reduced.

Drilled shaft cut-offs are e pected to be within the temporary casing within fill soils at this site. As a result, after the bell is e cavated and the bearing is approved by a representative of Terracon, we recommend that a permanent corrugated liner be installed in the shaft to a depth of about 2 feet below the casing. The corrugated liner should fit tightly into the clay and e tend up to the cut-off elevation. The corrugated liners should have the same diameter as the design si e of the shaft. Concrete may be poured by free-fall into clean and dry e cavations (less than 2 inches of standing water) inside the corrugated liner. After the concrete has set for a day, the annular space between the corrugated liner and temporary casing should be filled with sand/cement grout and the casing should then be pulled. Free-fall concrete should have a slump in the range of 5 to 7 inches.

Alternatively, for caisson cut-offs near the ground surface within the clayey fill material and above the perched water table, the “pour and pull” procedure may be used. In this procedure, the concrete slump should be increased to 7 to 9 inches and the top of concrete must be carefully monitored to ensure the concrete surface does not rise as the casing is pulled.

We recommend that all belled drilled shaft construction be observed on a full-time basis by a Terracon representative to chec that the soils encountered are consistent with the recommended design parameters. The drilled shaft contractor should also be re uired to submit proposed installation procedures, past pro ects of a similar nature, a resume of their superintendent, and a complete list of e uipment that will be used on the ob. It is recommended that these procedures and e uipment list be submitted to the owner and design team so that they can be reviewed and approved at a pre-bid meeting held in advance of bidding and award of the contract.

Although not encountered in the borings, shallow obstructions may be encountered during construction. The contractor should be prepared to deal with buried concrete, debris, or other

types of obstructions while drilling for caissons. Depending on the si e, depth, and thic ness of obstruction, construction delays can occur and therefore, appropriate contingencies for costs should be planned. Pot-holing at each caisson location in advance of caisson construction is recommended to confirm that the locations are clear of shallow obstructions.

Augered and Cast-in-Place (ACIP) Pile Design Parameters

Auger-cast piles are installed by continuous flight augering into the overburden soil utili ing a hollow-stem auger with typical diameters varying from 12 to 22 inches. Larger diameters up to 48 inches are also available locally by some contractors. Upon reaching the re uired depth, grout is pumped through the center of the auger as the auger is turned and withdrawn, resulting in a continuous column of cement grout. Reinforcement of auger-cast piles is achieved by immersing a vertical reinforcement bar or cage into the center of each pile, while the grout is still fluid.

Auger-cast piles e tended to bedroc at an appro imate depth of 50 feet below grade can be designed to the structural capacity of the grout. A 12-inch diameter pile is li ely to develop load carrying capacities on the order of 70 tons per pile. A 14-inch diameter pile can develop load carrying capacities on the order of 90 tons per pile. An 18-inch diameter pile can develop load carrying capacities on the order of 150 tons per pile. These design load values assume a minimum of 5,000 psi grout and a factor of safety on concrete strength of at least 4.0. Settlement of auger cast piles supported entirely on the roc is e pected to be less than inch. This settlement does not include the elastic compression of the cement grout.

Auger cast piles with lateral dimensions less than 24 inches should be used in pile groups of at least three piles if lateral restraint is not provided by other means li e walls or grade beams. The minimum pile spacing should be 2.5 times of the pile diameter.

ACIP Construction Considerations

Installation of ad acent piles with a clear distance spacing of less than ten pile diameters should be delayed until grout in the initial pile has set. This is re uired to avoid possible grout intrusion between the piles, which could eopardi e pile integrity.

Proper installation of ACIPs is highly operator dependent, and re uire a greater than average dependence on uality wor manship and uality control monitoring. In addition, the successful completion of ACIPs largely depend on the e uipment and installation procedures. The auger should be withdrawn in a controlled manner and a sufficient head of grout should always be maintained in the augers, to prevent nec ing of fluid grout due to hydrostatic pressures.

If practical drilling refusal is e perienced above the planned termination depth, then a boulder or other obstruction may be present, and a replacement pile should be installed. If this occurs, the situation should be evaluated by the Geotechnical Engineer and the Structural Engineer during

the pile driving operations. Continued “hard” drilling to attempt to extend through an obstruction should not be performed, due to the possibility of e cessive soil removal.

If the ACIP system is selected, uality assurance testing should be performed during installation, including documentation of the soil conditions encountered, the shaft lengths, amount of grout used, and strength tests on the grout. Only contractors using e uipment with Automated Monitoring E uipment (AME) should be used to monitor the grout installation and provide a record of the as-built installation depth, tor ue, drill speed, grout pressure and volume. One ACIP should be load tested to chec that the e pected capacity or modulus is achieved. We recommend that at least 25 percent of the ACIP piles be chec ed for integrity with the Impulse-Response Method Pile Integrity Test. Terracon can provide these services if re uested.

Deep Foundation Lateral Loading

The following table lists input values for use in LPILE analyses of drilled shafts and ACIP piles. LPILE will estimate values of $_h$ and E_{50} based on strength however, non-default values of $_h$ should be used where provided. Since deflection or a service limit criterion will most li ely control lateral capacity design, no safety/resistance factor is included with the parameters.

Elevation (feet, CCD) [1]	L-Pile Soil Model	S_u (psf) [2]	ϕ [2]	γ (pcf) [2, 3]	ε_{50} [2]	K [2] (pci)
Above 9	Sand (Reese)	---	28	115	---	5
6 to 9	Sand (Reese)	---	30	115	---	5
-4 to 6	Soft Clay	500	---	125	0.020	---
Below -4	Stiff Clay w/o Free Water	4,500	---	135	0.004	2,000

1. See **Subsurface Profile** in **Geotechnical Characterization** for more details on Stratigraphy.
2. Definition of Terms:
   S_u: Undrained shear strength
   ϕ: Internal friction angle,
   γ: Moist unit weight.
   ε_{50}: Non default E50 strain
3. Buoyant unit weight values should be used below water table. This can be calculated by subtracting 62 pcf from the moist unit weight values.

When deep foundations are used in groups, the lateral capacities of the shafts in the second, third, and subse uent rows of the group should be reduced as compared to the capacity of a single, independent founation. Guidance for applying p-multiplier factors to the p values in the p-y curves for each row of pile foundations within a pile group are as follows:

- Front row: P_m 0.8
- Second row: P_m 0.4
- Third and subse uent row: P_m 0.3.

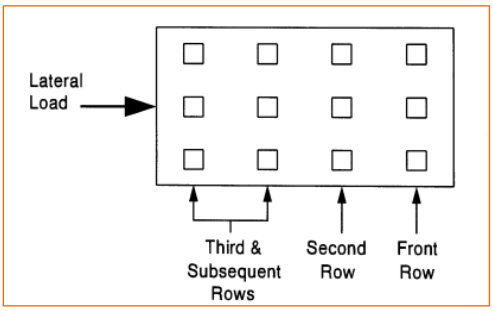

For the case of a single row of shafts supporting a laterally loaded grade beam, group action for lateral resistance of shafts would need to be considered when spacing is less than three shaft diameters (measured center-to-center). However, spacing closer than 3D (where D is the diameter of the foundation element) is not recommended, due to potential for the installation of a new foundation element disturbing an ad acent installed foundation, li ely resulting in a ial capacity reduction.

FLOOR SLABS

Floor slabs may be grade supported provided that certain measures are ta en, and assuming that the site grades will not be raised. Any organic, soft, or loose material should be removed from the proposed area. The newly e posed subgrade should then be proofrolled as detailed in the **Earthwork** section. Any areas e hibiting e cessive rutting or deflection should be undercut and replaced with compacted engineered fill. Following proofrolling, we recommend that a minimum 6-inch thic granular leveling course be placed directly below the slab to provide uniform support.

If the site grades are to be raised substantially, then construction of the floor slabs should be delayed several wee s to allow consolidation of the underlying fill and soft clay soils under the weight of the newly placed fills. It may be advisable to implement a settlement monitoring program to determine the magnitude and time rate of consolidation of the e isting fills. Construction of the floor slabs can then commence once it has been determined that at least 90 percent consolidation of the fill has occurred.

Design parameters for floor slabs assume the re uirements for **Earthwork** have been followed. Specific attention should be given to positive drainage away from the structure and. positive drainage of the aggregate base out from beneath the floor slab. Additional floor slab recommendations are provided below

Floor Slab Design Parameters

Item	Description
Floor Slab Support [1]	Minimum 6 inches of free-draining (less than 3 passing the U.S. No. 200 sieve) crushed aggregate compacted to at least 95 of ASTM D 698
Estimated Modulus of Subgrade Reaction [2]	115 pounds per s uare inch per inch (psi/in) for point loads

1. Floor slabs should be structurally independent of building footings or walls to reduce the possibility of floor slab crac ing caused by differential movements between the slab and foundation.
2. The recommended modulus value is based on a 12-inch s uare plate. The modulus value used in design should be ad usted based on the actual si e of the floor slab according to the Naval Facilities Engineering Design Manual 7.2, page 7.2-155, Table 4.

The use of a vapor retarder should be considered beneath concrete slabs on grade covered with wood, tile, carpet, or other moisture sensitive or impervious coverings, or when the slab will support e uipment sensitive to moisture. When conditions warrant the use of a vapor retarder, the slab designer should refer to ACI 302 and/or ACI 360 for procedures and cautions regarding the use and placement of a vapor retarder.

Saw-cut control oints should be placed in the slab to help control the location and e tent of crac ing. For additional recommendations refer to the ACI Design Manual. Joints or crac s should be sealed with a water-proof, non-e truding compressible compound specifically recommended for heavy duty concrete pavement and wet environments.

Settlement of floor slabs supported on e isting fill materials cannot be accurately predicted, but could be larger than normal and result in some crac ing. The floor slab can be stiffened by adding steel reinforcement, grade beams and/or post-tensioned elements.

Floor Slab Construction Considerations

On most pro ect sites, the site grading is generally accomplished early in the construction phase. However, as construction proceeds, the subgrade may be disturbed by utility e cavations, construction traffic, desiccation, rainfall, etc. As a result, corrective action may be re uired prior to placement of the granular leveling course and concrete.

The condition of the floor slab subgrades should be reviewed and tested immediately prior to placement of the granular leveling course and construction of the slabs. Particular attention should be paid to high traffic areas that were rutted and disturbed earlier and to areas where bac filled trenches are located. Areas where unsuitable conditions are located should be repaired by removing the affected material and replacing it with engineered soil fill.

LATERAL EARTH PRESSURES

Design Parameters

Structures with unbalanced bac fill levels on opposite sides should be designed for earth pressures at least e ual to values indicated in the following table. Earth pressures will be influenced by structural design of the walls, conditions of wall restraint, methods of construction and/or compaction and the strength of the materials being restrained. Two wall restraint conditions are shown. Active earth pressure is commonly used for design of free-standing cantilever retaining walls and assumes wall movement. The "at-rest" condition assumes no wall movement and is commonly used for loading doc walls or other walls restrained at the top. The recommended design lateral earth pressures do not include a factor of safety and do not provide for possible hydrostatic pressure on the walls (unless stated).

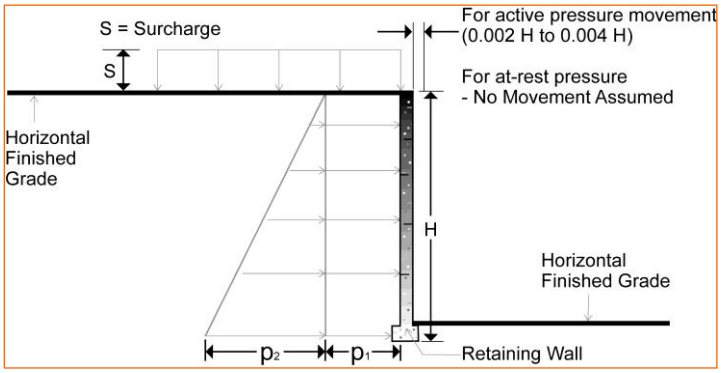

Lateral Earth Pressure Design Parameters				
Earth Pressure Condition [1]	**Coefficient for Backfill Type** [2]	**Surcharge Pressure** [3, 4, 5] **p_1 (psf)**	**Effective Fluid Pressures (psf)** [2, 4, 5]	
			Unsaturated [6]	**Submerged** [6]
Active (Ka)	Granular - 0.31	(0.31)S	(40)H	(80)H
At-Rest (Ko)	Granular - 0.47	0.47)S	(55)H	(90)H
Passive (Kp)	Granular - 3.25 Fine Grained - 2.46	--- ---	(390)H (295)H	(250)H (205)H

1. For active earth pressure, wall must rotate about base, with top lateral movements 0.002 H to 0.004 H, where H is wall height. For passive earth pressure, wall must move hori ontally to mobili e resistance.
2. Uniform, hori ontal bac fill, compacted to at least 92 percent of the ASTM D 1557 ma imum dry density, rendering a ma imum total unit weight of 120 pcf.
3. Uniform surcharge, where S is surcharge pressure.
4. Loading from heavy compaction e uipment is not included.
5. No safety factor is included in these values.
6. In order to achieve “Unsaturated” conditions, follow guidelines in **Subsurface Drainage for Below Grade Walls** below. “Submerged” conditions are recommended when drainage behind walls is not incorporated into the design.

Bac fill placed against structures should consist of granular soils or low plasticity cohesive soils. For the granular values to be valid, the granular bac fill must e tend out and up from the base of the wall at an angle of at least 45 and 60 degrees from vertical for the active and passive cases, respectively.

Subsurface Drainage for Below Grade Walls

A perforated rigid plastic drain line installed behind the base of walls and e tends below ad acent grade is recommended to prevent hydrostatic loading on the walls. The invert of a drain line around a below-grade building area or e terior retaining wall should be placed near foundation bearing level. The drain line should be sloped to provide positive gravity drainage to daylight or to a sump pit and pump. The drain line should be surrounded by clean, free-draining granular material having less than 5 percent passing the No. 200 sieve. The free-draining aggregate should be encapsulated in a filter fabric. The granular fill should e tend to within 2 feet of final grade, where it should be capped with compacted cohesive fill to reduce infiltration of surface water into the drain system. For interior locations, the granular fill should e tend to the floor slab subgrade elevation.

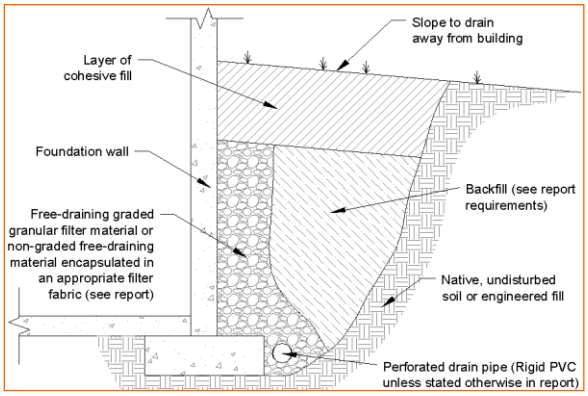

As an alternative to free-draining granular fill, a pre-fabricated drainage structure may be used. A pre-fabricated drainage structure is a plastic drainage core or mesh which is covered with filter fabric to prevent soil intrusion, and is fastened to the wall prior to placing bac fill.

PAVEMENTS

General Pavement Comments

There is often a time lapse between the end of grading operations and the commencement of paving. Subgrades prepared early in the construction process can become disturbed by construction traffic. Non-uniform subgrades often result in poor pavement performance and local failures relatively soon after pavements are constructed. Depending on the paving e uipment used by the contractor, measures may be re uired to improve subgrade strength to greater depths for support of heavily loaded truc s. Improvements should be made as recommended in **Earthwork**.

Before paving, and where recommended by Terracon, pavement subgrades should be proofrolled in the presence of a Terracon representative. Proofrolling of the subgrade should help locate soft,

yielding, or otherwise unsuitable soil at or ust below the e posed subgrade level. Unsuitable areas observed at this time should be improved by scarification and compaction or be removed and replaced with engineered fill.

Pavement Design Parameters

A subgrade CBR of 3 should be used for the AC pavement designs, and a modulus of subgrade reaction of 115 pci should be used for the PCC pavement designs. The values were empirically derived based upon our e perience with the describe soil type subgrade soils and our understanding of the uality of the subgrade as prescribed by the **Site Preparation** conditions as outlined in **Earthwork**.

Pavement Drainage

Pavements should be sloped to provide rapid drainage of surface water. Water allowed to pond on or ad acent to the pavements could saturate the subgrade and contribute to premature pavement deterioration. In addition, the pavement subgrade should be graded to provide positive drainage within the granular base section. Appropriate sub-drainage or connection to a suitable daylight outlet should be provided to remove water from the granular subbase.
Based on the possibility of shallow and/or perched groundwater, we recommend installing a pavement subdrain system to control groundwater, improve stability, and improve long term pavement performance.

We recommend at least 6 inches of free-draining granular material should be placed beneath the pavements. The use of a free draining granular base will also reduce the potential for frost action. We recommend pavement subgrades be crowned at least 2 percent, to promote the flow of water towards the subdrains, and to reduce the potential for ponding of water on the subgrade. The design recommendations for the subdrains are provided in the following table:

Subdrain Design Recommendations	
Item	**Value**
Free Draining Granular Base Thickness below Pavement	Minimum 6 inches of free-draining (such as IDOT CA-7) crushed aggregate compacted to at least 95 of ASTM D 698
Minimum Drain Pipe Diameter	4 inches
Drain Trench Width	16 inches or greater to provide minimum 6-inch annulus of drainage aggregate around drain pipe.
Invert Depth below Subgrade Elevation	3 feet
Maximum Drain Pipe Spacing	50 feet
Subdrain Trench Backfill Material	No. 57 aggregate or -inch aggregate

The subdrains should be hydraulically connected to the free-draining granular base layer. Subdrains should be sloped to provide positive gravity drainage to reliable discharge points such as a storm water detention basin or sewer line. Periodic maintenance of subdrains is re uired for long-term proper performance.

The pavement surfacing and ad acent sidewal s should be sloped to provide rapid drainage of surface water. Water should not be allowed to pond on or ad acent to these grade supported slabs, since this could saturate the subgrade and contribute to premature pavement or slab deterioration.

The pavement surfacing and ad acent sidewal s should be sloped to provide rapid drainage of surface water. Water should not be allowed to pond on or ad acent to slabs, since it could saturate the subgrade and contribute to premature pavement or slab deterioration.

Pavement Maintenance

The pavement sections represent minimum recommended thic nesses and, as such, periodic maintenance should be anticipated. Therefore, preventive maintenance should be planned and provided for through an on-going pavement management program. Maintenance activities are intended to slow the rate of pavement deterioration and to preserve the pavement investment. Maintenance consists of both locali ed maintenance (e.g. crac and oint sealing and patching) and global maintenance (e.g. surface sealing). Preventive maintenance is usually the priority when implementing a pavement maintenance program. Additional engineering observation is recommended to determine the type and e tent of a cost-effective program. Even with periodic maintenance, some movements and related crac ing may still occur and repairs may be re uired.

Pavement performance is affected by its surroundings. In addition to providing preventive maintenance, the civil engineer should consider the following recommendations in the design and layout of pavements:

- Final grade ad acent to paved areas should slope down from the edges at a minimum 2
- Subgrade and pavement surfaces should have a minimum 2 slope to promote proper surface drainage
- Install below pavement drainage systems surrounding areas anticipated for fre uent wetting
- Install oint sealant and seal crac s immediately
- Seal all landscaped areas in or ad acent to pavements to reduce moisture migration to subgrade soils
- Place compacted, low permeability bac fill against the e terior side of curb and gutter and
- Place curb, gutter and/or sidewal directly on clay subgrade soils rather than on unbound granular base course materials

SEISMIC CONSIDERATIONS

The seismic design re uirements for buildings and other structures are based on Seismic Design Category. Site Classification is re uired to determine the Seismic Design Category for a structure. The Site Classification is based on the upper 100 feet of the site profile defined by a weighted average value of either shear wave velocity, standard penetration resistance, or undrained shear strength in accordance with Section 20.4 of ASCE 7-10.

Description	Value
2012 International Building Code Site Classification (IBC) [1]	D [2]
Site Latitude	41.744
Site Longitude	-87.640
S_{DS} Spectral Acceleration for a Short Period [3]	0.148g
S_{D1} Spectral Acceleration for a 1-Second Period [3]	0.102g

1. Seismic site classification in general accordance with the *20XX International Building Code*, which refers to ASCE 7-10.
2. The 2012 International Building Code (IBC) uses a site profile e tending to a depth of 100 feet for seismic site classification. Borings at this site were e tended to a ma imum depth of 58 feet. The site properties below the boring depth to 100 feet were estimated based on our e perience and nowledge of geologic conditions of the general area. Additional deeper borings or geophysical testing may be performed to confirm the conditions below the current boring depth.
3. These values were obtained using online seismic design maps and tools provided by the USGS (http://earth ua e.usgs.gov/ha ards/designmaps/).

GENERAL COMMENTS

Our services are conducted with the understanding of the pro ect as described in the proposal, and will incorporate collaboration with the design team as we complete our services to verify assumptions. Revision of our understanding to reflect actual conditions important to our services will be based on these verifications and will be reflected in the final report. The design team should collaborate with Terracon to confirm these assumptions and to prepare the final design plans and specifications. This facilitates the incorporation of our opinions related to implementation of our geotechnical recommendations. Any information conveyed prior to the final report is for informational purposes only and should not be considered or used for decision-ma ing purposes.

Our analysis and opinions are based upon our understanding of the geotechnical conditions in the area, the data obtained from our site e ploration and from our understanding of the pro ect. Variations will occur between e ploration point locations, across the site, or due to the modifying effects of construction or weather. The nature and e tent of such variations may not become evident until during or after construction. Terracon should be retained as the Geotechnical

Engineer, where noted in the final report, to provide observation and testing services during grading, e cavation, foundation construction and other earth-related construction phases of the pro ect. If variations appear, we can provide further evaluation and supplemental recommendations. If variations are noted in the absence of our observation and testing services on-site, we should be immediately notified so that we can provide evaluation and supplemental recommendations.

Support of floor slabs and pavements on or above e isting fill materials is discussed in this report. However, even with the recommended construction procedures, there is an inherent ris for the owner that compressible fill or unsuitable material within or buried by the fill will not be discovered. This ris of unforeseen conditions cannot be eliminated without completely removing the e isting fill, but can be reduced by following the recommendations contained in this report. To ta e advantage of the cost benefit of not removing the entire amount of undocumented fill, the owner must be willing to accept the ris associated with building over the undocumented fills following the recommended rewor ing of the material.

Our scope of services does not include either specifically or by implication any environmental or biological (e.g., mold, fungi, bacteria) assessment of the site or identification or prevention of pollutants, ha ardous materials or conditions. If the owner is concerned about the potential for such contamination or pollution, other studies should be underta en.

Our services and any correspondence are intended for the sole benefit and e clusive use of our client for specific application to the pro ect discussed and are accomplished in accordance with generally accepted geotechnical engineering practices with no third party beneficiaries intended. Any third party access to services or correspondence is solely for information purposes only. Reliance upon the services and any wor product is limited to our client, and is not intended for third parties. Any use or reliance of the provided information by third parties is done solely at their own ris . No warranties, either e press or implied, are intended or made.

Site characteristics as provided are for design purposes and not to estimate e cavation cost. Any use of our report in that regard is done at the sole ris of the e cavating cost estimator as there may be variations on the site that are not apparent in the data that could significantly impact e cavation cost. Any parties charged with estimating e cavation costs should see their own site characteri ation for specific purposes to obtain the specific level of detail necessary for costing. Site safety, and cost estimating including, e cavation support, and dewatering re uirements/design are the responsibility of others. If changes in the nature, design, or location of the pro ect are planned, our conclusions and recommendations shall not be considered valid unless we review the changes and either verify or modify our conclusions in writing.

ATTACHMENTS

EXPLORATION AND TESTING PROCEDURES

EXPLORATION AND TESTING PROCEDURES

Field Exploration

Boring Layout and Elevations: A Terracon field engineer provided the boring layout. Coordinates were obtained from a hand-held GPS device with an accuracy of 20 feet (/-). The e isting ground surface elevations of the boring locations were estimated from a site topographic survey provided to Terracon. Elevations reference the Chicago City Datum (CCD).

Subsurface Exploration Procedures: We advance the borings with trac -mounted rotary drill rig using continuous flight hollow-stem augers. The deep roc core borings utili ed wash rotary drilling techni ues. Four samples were obtained in the upper 10 feet of each boring and at intervals of 5 feet thereafter. In the thin-walled tube sampling procedure, a thin-walled, seamless steel tube with a sharp cutting edge is pushed hydraulically into the soil to obtain a relatively undisturbed sample. In the split-barrel sampling procedure, a standard 2-inch outer diameter split-barrel sampling spoon is driven into the ground by a 140-pound automatic hammer falling a distance of 30 inches. The number of blows re uired to advance the sampling spoon the last 12 inches of a normal 18-inch penetration is recorded as the Standard Penetration Test (SPT) resistance value. The SPT resistance values, also referred to as N-values, are indicated on the boring logs at the test depths. We observe and record groundwater levels during drilling and sampling. For safety purposes, all borings are bac filled with a mi ture of auger cuttings and bentonite chips after their completion. The roc core borings were bac filled with bentonite grout.

Upon encountering bedroc in select borings, a roc core (using NX roc core barrel) was obtained. Water was used as a drilling fluid for roc coring and the spent water was discharged on site.

The sampling depths, penetration distances, and other sampling information are recorded on the field boring logs. The samples are placed in appropriate containers and ta en to our soil laboratory for testing and classification by a geotechnical engineer. Our e ploration team prepares field boring logs as part of the drilling operations. These field logs include visual classifications of the materials encountered during drilling and our interpretation of the subsurface conditions between samples. Final boring logs are prepared from the field logs. The final boring logs represent the geotechnical engineer's interpretation of the field logs and include modifications based on observations and tests of the samples in our laboratory.

Laboratory Testing

The pro ect engineer reviews the field data and assigns various laboratory tests to better understand the engineering properties of the various soil and roc strata as necessary for this pro ect. Procedural standards noted below are for reference to methodology in general. In some cases, variations to methods are applied because of local practice or professional udgment.

Standards noted below include reference to other, related standards. Such references are not necessarily applicable to describe the specific test performed.

- ASTM D2216 Standard Test Methods for Laboratory Determination of Water (Moisture) Content of Soil and Roc by Mass
- ASTM D4318 Standard Test Methods for Li uid Limit, Plastic Limit, and Plasticity Inde of Soils
- ASTM D2166/D2166M Standard Test Method for Unconfined Compressive Strength of Cohesive Soil
- ASTM D7012 Standard Test Method for Unia ial Compressive Strength of Roc Method C
- ASTM D2435/D2435M Standard Test Methods for One-Dimensional Consolidation Properties of Soils Using Incremental Loading

The laboratory testing program often includes e amination of soil samples by an engineer. Based on the material's texture and plasticity, we describe and classify the soil samples in accordance with the Unified Soil Classification System.

Roc classification is conducted using locally accepted practices for engineering purposes petrographic analysis may reveal other roc types. Roc core samples typically provide an improved specimen for this classification. Boring log roc classification is determined using the Description of Roc Properties.

SITE LOCATION AND EXPLORATION PLANS

SITE LOCATION

Green Era Biotechnology Plant ■ Chicago, Illinois
October 19, 2018 ■ Terracon Pro ect No. MR175403

Terracon GeoReport

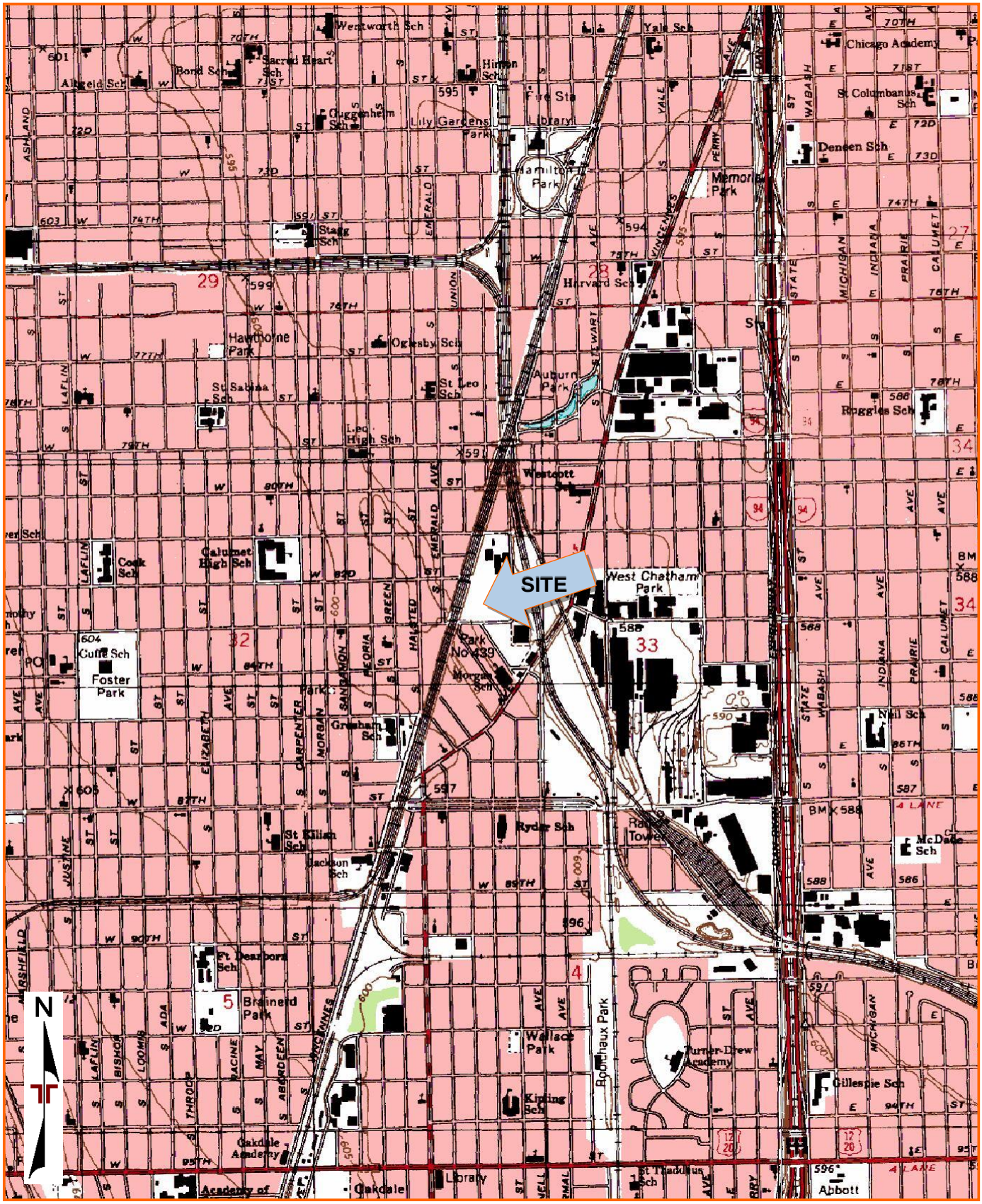

DIAGRAM IS FOR GENERAL LOCATION ONLY, AND IS NOT INTENDED FOR CONSTRUCTION PURPOSES

TOPOGRAPHIC MAP IMAGE COURTESY OF THE U.S. GEOLOGICAL SURVEY
UADRANGLES INCLUDE: ENGLEWOOD, IL (1/1/1997), JACKSON PARK, IL (1/1/1998), BLUE ISLAND, IL (1/1/1997) and LAKE CALUMET, IL (1/1/1997).

EXPLORATION PLAN

B-1 B-2 B-3 B-4 (MW-4) B-5 B-6 B-7 B-8 B-9 B-10 B-11 B-12 B-13 B-14 B-15 B-16 B-17 B-18 B-19 B-20

N

Scale: 1 inch = 30 ft.

LEGEND:

- PROPERTY LINE
- HWL — HIGH WATER LEVEL
- CCD — CHICAGO CITY DATUM
- FFE — FINISHED FLOOR ELEVATION
- 15.00 — PROPOSED CONTOUR
- FLARED END SECTION (FES)
- 4'Ø CATCH BASIN (CB)

NO.	DATE	ISSUE
1	1/19/18	SCHEMATIC DESIGN

GREEN ERA EDUCATIONAL NFP
GREEN ERA SUSTAINABILITY, LLC

I HEREBY CERTIFY THAT THIS PLAN, SPECIFICATION, OR REPORT WAS PREPARED BY ME OR UNDER MY DIRECT SUPERVISION AND THAT I AM A DULY REGISTERED ARCHITECT UNDER THE LAWS OF THE STATE OF ILLINOIS

DATE: _____ REGISTRATION NO.: _____

DRAWN BY: MJC
CHECKED BY: CAM
APPROVED: CAM
SCALE: 1"=30'

©2017

Job No. 15-194-001

SITE GRADING PLAN
C3.0

EXPLORATION RESULTS

BORING LOG NO. B-1

PROJECT: Green Era Biotechnology Plant

CLIENT: Green Era Educational NFP
Chicago, Illinois

SITE: 650 W. 83rd St.
Chicago, Illinois

LOCATION See Exploration Plan

Latitude: 41.7449° Longitude: -87.64°

Approximate Surface Elev: 15 (Ft.) +/-

DEPTH	ELEVATION (Ft.)	GRAPHIC LOG	DEPTH (Ft.)	WATER LEVEL OBSERVATIONS	SAMPLE TYPE	RECOVERY (In.)	FIELD TEST RESULTS	SAMPLE NUMBER	LABORATORY HP (tsf)	UNCONFINED COMPRESSIVE STRENGTH (tsf)	WATER CONTENT (%)	ATTERBERG LIMITS LL-PL-PI
						16	4-9-10 N=19	1			21	
				▽		13	5-11-8 N=19	2			13	
						14	2-3-3 N=6	3			46	
			5			15	1-2-2 N=4	4			31	
						8	2-1-2 N=3	5	0.50 (HP)		23	
			10			18	1-1-2 N=3	6	0.25 (HP)		26	34-16-18
			15			19		7	2.00 (HP)	5.06	17	27-15-12
						16	5-7-8 N=15	8	4.50 (HP)		13	
			20			17	4-5-6 N=11	9	4.50 (HP)		13	
			25			17	4-7-8 N=15	10	4.00 (HP)		13	
			30									

URBAN FILL, consisting of varying amounts of sand, gravel, clay, brick, wood, and organics

7.0 8+/-

SILTY SAND (SM), trace gravel and organics, dark gray, loose, saturated

9.0 6+/-

LEAN CLAY (CL), trace sand and gravel, gray, soft to medium stiff

18.0 -3+/-

LEAN CLAY (CL), trace sand and gravel, gray, very stiff to hard

Stratification lines are approximate. In-situ, the transition may be gradual.

Hammer Type: Automatic

Advancement Method:
3.25" Hollow Stem Auger to 10 feet, then rotary wash to 52', then rock core to 58'.

Abandonment Method:
Boring backfilled with bentonite grout upon completion

See Exploration and Testing Procedures for a description of field and laboratory procedures used and additional data (If any).

See Supporting Information for explanation of symbols and abbreviations.

Elevations estimated from a site topographic survey.

Notes:
Elevations reference the Chicago City Datum (CCD).

WATER LEVEL OBSERVATIONS

▽ *1.5' while drilling*

Terracon
650 W Lake St Ste 420
Chicago, IL

Boring Started: 11-28-2017 | Boring Completed: 11-28-2017

Drill Rig: D-120 track | Driller: GEOCON/Robert

Project No.: MR175403

THIS BORING LOG IS NOT VALID IF SEPARATED FROM ORIGINAL REPORT. GEO SMART LOG-NO WELL MR175403 GREEN ERA BIOTECH.GPJ TERRACON_DATATEMPLATE.GDT 12/21/17

BORING LOG NO. B-1

PROJECT: Green Era Biotechnology Plant

CLIENT: Green Era Educational NFP
Chicago, Illinois

SITE: 650 W. 83rd St.
Chicago, Illinois

LOCATION See Exploration Plan

Latitude: 41.7449° Longitude: -87.64°

Approximate Surface Elev: 15 (Ft.) +/-

DEPTH	ELEVATION (Ft.)	DEPTH (Ft.)	RECOVERY (In.)	FIELD TEST RESULTS	SAMPLE NUMBER	LABORATORY HP (tsf)	UNCONFINED COMPRESSIVE STRENGTH (tsf)	WATER CONTENT (%)	ATTERBERG LIMITS LL-PL-PI
	LEAN CLAY (CL), trace sand and gravel, gray, very stiff to hard *(continued)*								
		35	18	4-5-7 N=12	11	3.50 (HP)		13	
37.0	-22+/-								
	SILTY CLAY WITH GRAVEL (CL/ML), trace sand, gray, hard								
		40	18	7-11-18 N=29	12	4.50 (HP)		12	
40.0	-25+/-								
	SILTY CLAY (CL/ML), trace sand and gravel, gray, hard								
		45	18	17-37-60 N=97	13	3.50 (HP)		10	
50.0	-35+/-		9	38-50/3"	14	4.50+ (HP)		9	
	DOLOMITE, light gray, slightly fractured, moderate spacing, unweathered, medium strong	50							
		55	68		RUN 1			2	
	Recovery = 94% RQD = 67% Unit Weight = 159 pcf Unconfined Compressive Strength = 4935 psi								
58.0	-43+/-								
	Boring Terminated at 58 Feet								

Stratification lines are approximate. In-situ, the transition may be gradual.

Hammer Type: Automatic

Advancement Method:
3.25" Hollow Stem Auger to 10 feet, then rotary wash to 52', then rock core to 58'.

Abandonment Method:
Boring backfilled with bentonite grout upon completion

See Exploration and Testing Procedures for a description of field and laboratory procedures used and additional data (If any).

See Supporting Information for explanation of symbols and abbreviations.

Elevations estimated from a site topographic survey.

Notes:

WATER LEVEL OBSERVATIONS

1.5' while drilling

Terracon
650 W Lake St Ste 420
Chicago, IL

Boring Started: 11-28-2017 | Boring Completed: 11-28-2017

Drill Rig: D-120 track | Driller: GEOCON/Robert

Project No.: MR175403

THIS BORING LOG IS NOT VALID IF SEPARATED FROM ORIGINAL REPORT. GEO SMART LOG-NO WELL MR175403 GREEN ERA BIOTECH.GPJ TERRACON_DATATEMPLATE.GDT 12/21/17

Rock Core Photograph – Boring B-1 – Run #1
Green Era Biotechnology Plant ■ Chicago, Illinois
October 22, 2018 ■ Terracon Pro ect No. MR175403R1

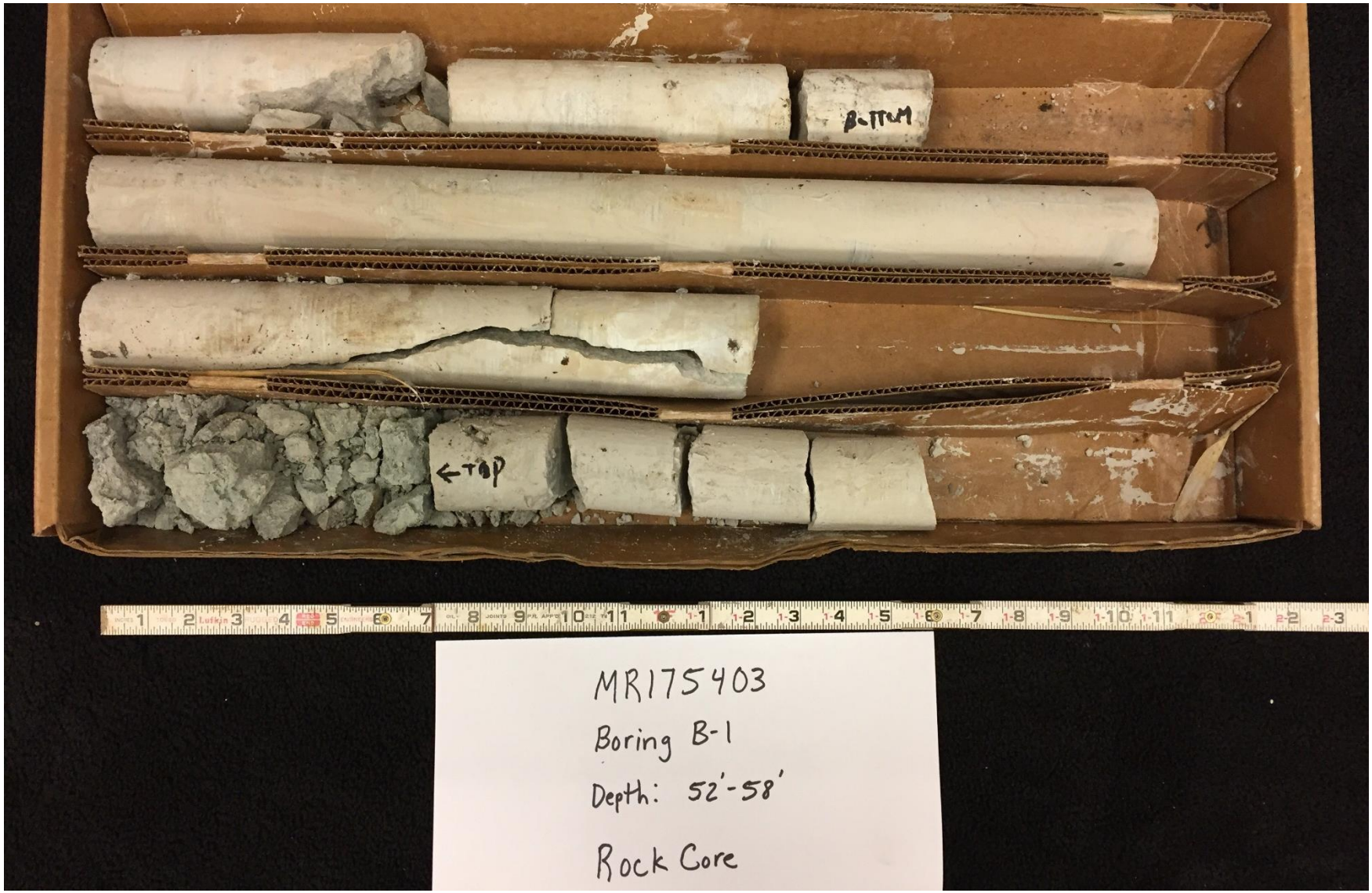

Terracon
Consulting Engineers & Scientists

UNIAXIAL COMPRESSIVE STRENGTH
ASTM D 7012
Method C

Laboratory Services Group 750 Corporate Woods Parkway Vernon Hills, Illinois 60061 Ph. (224)352-7000 fax (224)352-7024

Pro ect No.:	MR175403	Tested By:	BCM	Date:	12/8/2017
Pro ect Name:	GREEN ERA BIOTECHNOLOGY PLANT	Calculated By:	BCM	Date:	12/8/2017
Boring No.	B-1	Chec ed By:	WP	Date:	12/8/2017
Depth:	57.5'	Sample ID No.:	S-1		
Roc Description:	GRAY ROCK CORE				

Roc Sample Moisture Condition: ☐ As Received ☐ In-Situ ☐ Saturated ☐ Oven Dry

TOLERANCE CHECK

End Flatness: Ma . Amplitude	1) 0.0055	2) 0.0056	3) 0.0052	in.	0.0010	Yes			
S uarness: 0.01 in. gap at 2 in	No	If Yes, 0.01 in. at		in.					
Sides: Ma . Amplitude	1) 0.033	2) 0.038	3) 0.041	in.	0.01 in.	Yes			

Angle of Core A is to Bedding: 90 deg Stress or Strain Rate: 0.03 / min.

Length (in):	1) 4.0020	2) 4.0150	3) 4.0580	Avg.	4.0250	in.
Diameter (in):	1) 1.988	2) 1.982	3) 1.982	Avg.	1.984	in.

Area $(in)^2$: 3.09

Uniaxial Compressive Strength: **4935** psi Weight: 520.06 grams

L/D: **2.0** Weight: 1.146 lbs.

Load: **15240** lbs. **Unit Weight:** **159.1** pcf

YOUNG'S MODULUS

Et (50 Co)	-	10^5 psi
Es (50 Co)	-	

POISSON'S RATIO

Vt (50 Co)	-
Vs (50 Co)	-

REMARKS:

Before

After

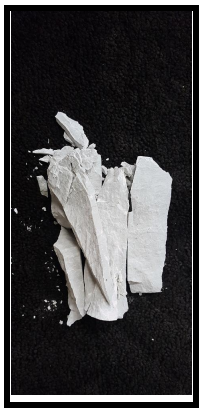

BORING LOG NO. B-2

PROJECT: Green Era Biotechnology Plant

CLIENT: Green Era Educational NFP
Chicago, Illinois

SITE: 650 W. 83rd St.
Chicago, Illinois

LOCATION See Exploration Plan

Latitude: 41.7449° Longitude: -87.6397°

Approximate Surface Elev: 15 (Ft.) +/-

DEPTH	ELEVATION (Ft.)	DESCRIPTION
		URBAN FILL, consisting of varying amounts of sand, gravel, clay, brick, wood, and organics
7.0	8+/-	**SILTY SAND (SM)**, trace gravel and organics, dark gray, loose, saturated
8.5	6.5+/-	**LEAN CLAY (CL)**, trace sand and gravel, gray, soft to medium stiff
21.0	-6+/-	**LEAN CLAY (CL)**, trace sand and gravel, gray, very stiff to hard

DEPTH (Ft.)	WATER LEVEL OBSERVATIONS	SAMPLE TYPE	RECOVERY (In.)	FIELD TEST RESULTS	SAMPLE NUMBER	LABORATORY HP (tsf)	UNCONFINED COMPRESSIVE STRENGTH (tsf)	WATER CONTENT (%)	ATTERBERG LIMITS LL-PL-PI
			12	5-15-24 N=39	1			5	
			16	10-10-10 N=20	2			9	
			16	4-5-4 N=9	3			40	
5									
	▽		15	3-2-3 N=5	4			30	
			16	2-3-2 N=5	5	0.50 (HP)		25	36-17-19
10									
			15	2-2-2 N=4	6	0.50 (HP)		25	36-15-21
15									
			18	0-0-2 N=2	7	0.25 (HP)		26	34-16-18
20									
			15	4-6-7 N=13	8	2.50 (HP)		15	
25									
			18	6-11-13 N=24	9	4.50 (HP)		12	
30									

Stratification lines are approximate. In-situ, the transition may be gradual.

Hammer Type: Automatic

Advancement Method:
3.25" Hollow Stem Auger to 10 feet, then rotary wash to boring termination.

Abandonment Method:
Boring backfilled with bentonite grout upon completion

See Exploration and Testing Procedures for a description of field and laboratory procedures used and additional data (If any).

See Supporting Information for explanation of symbols and abbreviations.

Elevations estimated from a site topographic survey.

Notes:
Elevations reference the Chicago City Datum (CCD).

WATER LEVEL OBSERVATIONS

▽ *7' while sampling*

Terracon
650 W Lake St Ste 420
Chicago, IL

Boring Started: 11-27-2017	Boring Completed: 11-27-2017
Drill Rig: D-120 track	Driller: GEOCON/Robert
Project No.: MR175403	

THIS BORING LOG IS NOT VALID IF SEPARATED FROM ORIGINAL REPORT. GEO SMART LOG-NO WELL MR175403 GREEN ERA BIOTECH.GPJ TERRACON_DATATEMPLATE.GDT 12/21/17

BORING LOG NO. B-2

PROJECT: Green Era Biotechnology Plant

CLIENT: Green Era Educational NFP
Chicago, Illinois

SITE: 650 W. 83rd St.
Chicago, Illinois

LOCATION See Exploration Plan

Latitude: 41.7449° Longitude: -87.6397°

Approximate Surface Elev: 15 (Ft.) +/-

DEPTH	ELEVATION (Ft.)	DEPTH (Ft.)	RECOVERY (In.)	FIELD TEST RESULTS	SAMPLE NUMBER	LABORATORY HP (tsf)	UNCONFINED COMPRESSIVE STRENGTH (tsf)	WATER CONTENT (%)	ATTERBERG LIMITS LL-PL-PI
	LEAN CLAY (CL), trace sand and gravel, gray, very stiff to hard *(continued)*								
32.0	-17+/-								
	SILTY CLAY (CL/ML), trace sand and gravel, gray, hard		15	7-8-10 N=18	10	4.50 (HP)		15	
		35							
			16	7-11-14 N=25	11	4.50 (HP)		14	
		40							
42.0	-27+/-								
	SILT WITH GRAVEL (ML), trace clay, gray, very dense, moist		18	28-46-62 N=108	12			12	
		45							
50.0	-35+/-		12	52-81-50/1" N=81+51/1"	13			12	
50.5	Rock fragments. Assumed top of rock. -35.5+/-	50	1	50/1"	14			18	
	Boring Terminated at 50.5 Feet								

Stratification lines are approximate. In-situ, the transition may be gradual.

Hammer Type: Automatic

Advancement Method:
3.25" Hollow Stem Auger to 10 feet, then rotary wash to boring termination.

Abandonment Method:
Boring backfilled with bentonite grout upon completion

See Exploration and Testing Procedures for a description of field and laboratory procedures used and additional data (If any).

See Supporting Information for explanation of symbols and abbreviations.

Elevations estimated from a site topographic survey.

Notes:

WATER LEVEL OBSERVATIONS

▽ 7' while sampling

Terracon
650 W Lake St Ste 420
Chicago, IL

Boring Started: 11-27-2017 | Boring Completed: 11-27-2017

Drill Rig: D-120 track | Driller: GEOCON/Robert

Project No.: MR175403

THIS BORING LOG IS NOT VALID IF SEPARATED FROM ORIGINAL REPORT. GEO SMART LOG-NO WELL MR175403 GREEN ERA BIOTECH.GPJ TERRACON_DATATEMPLATE.GDT 12/21/17

BORING LOG NO. B-3

PROJECT: Green Era Biotechnology Plant

CLIENT: Green Era Educational NFP
Chicago, Illinois

SITE: 650 W. 83rd St.
Chicago, Illinois

LOCATION See Exploration Plan

Latitude: 41.7448° Longitude: -87.6403°

Approximate Surface Elev: 15 (Ft.) +/-

DEPTH	ELEVATION (Ft.)	GRAPHIC LOG	DEPTH (Ft.)	WATER LEVEL OBSERVATIONS	SAMPLE TYPE	RECOVERY (In.)	FIELD TEST RESULTS	SAMPLE NUMBER	LABORATORY HP (tsf)	UNCONFINED COMPRESSIVE STRENGTH (tsf)	WATER CONTENT (%)	ATTERBERG LIMITS LL-PL-PI
						13	5-8-11 N=19	1			11	
				▽		8	6-50/3" N=50/3"	2	2.25 (HP)		15	
						14	4-5-7 N=12	3			42	
			5			16	2-2-1 N=3	4			28	
						15	2-3-2 N=5	5	1.50 (HP)		23	
			10			17	1-1-1 N=2	6	0.50 (HP)		28	36-16-20
			15			18	0-1-2 N=3	7	0.25 (HP)		24	
			20			16	6-7-10 N=17	8	3.00 (HP)		14	
			25			17	5-9-11 N=20	9	3.00 (HP)		15	
			30									

6.5 / 8.5+/- — **URBAN FILL**, consisting of varying amounts of sand, gravel, clay, brick, wood, and organics

8.5 / 6.5+/- — **SILTY SAND (SM)**, trace gravel and organics, dark gray, loose, wet

10.0 / 5+/- — **LEAN CLAY (CL)**, trace sand and gravel, gray, stiff

LEAN CLAY (CL), trace sand and gravel, gray, soft to medium stiff

21.0 / -6+/- — **LEAN CLAY (CL)**, trace sand and gravel, gray, very stiff to hard

Stratification lines are approximate. In-situ, the transition may be gradual.

Hammer Type: Automatic

Advancement Method:
3.25" Hollow Stem Auger to 10 feet, then rotary wash to boring termination.

Abandonment Method:
Boring backfilled with bentonite grout upon completion

See Exploration and Testing Procedures for a description of field and laboratory procedures used and additional data (If any).

See Supporting Information for explanation of symbols and abbreviations.

Elevations estimated from a site topographic survey.

Notes:
Elevations reference the Chicago City Datum (CCD).

WATER LEVEL OBSERVATIONS

▽ *2' while drilling*

Terracon
650 W Lake St Ste 420
Chicago, IL

Boring Started: 11-27-2017 | Boring Completed: 11-27-2017

Drill Rig: D-120 track | Driller: GEOCON/Robert

Project No.: MR175403

THIS BORING LOG IS NOT VALID IF SEPARATED FROM ORIGINAL REPORT. GEO SMART LOG-NO WELL MR175403 GREEN ERA BIOTECH.GPJ TERRACON_DATATEMPLATE.GDT 12/21/17

BORING LOG NO. B-3

PROJECT: Green Era Biotechnology Plant

CLIENT: Green Era Educational NFP
Chicago, Illinois

SITE: 650 W. 83rd St.
Chicago, Illinois

LOCATION See Exploration Plan

Latitude: 41.7448° Longitude: -87.6403°

Approximate Surface Elev: 15 (Ft.) +/-

DEPTH	ELEVATION (Ft.)	DEPTH (Ft.)	RECOVERY (In.)	FIELD TEST RESULTS	SAMPLE NUMBER	LABORATORY HP (tsf)	UNCONFINED COMPRESSIVE STRENGTH (tsf)	WATER CONTENT (%)	ATTERBERG LIMITS LL-PL-PI
LEAN CLAY (CL), trace sand and gravel, gray, very stiff to hard *(continued)*									
		35	18	7-8-12 N=20	10	3.00 (HP)		16	
36.0	-21+/-								
SILTY CLAY WITH GRAVEL (CL/ML), trace sand, gray, hard									
		40	18	7-8-9 N=17	11	4.00 (HP)		16	
42.0	-27+/-								
SILT WITH GRAVEL (ML), trace clay, gray, very dense, moist									
		45	18	22-45-57 N=102	12			14	
			18	38-45-56 N=101	13			10	
50.0	-35+/-	50							
Boring Terminated at 50 Feet									

Stratification lines are approximate. In-situ, the transition may be gradual.

Hammer Type: Automatic

Advancement Method:
3.25" Hollow Stem Auger to 10 feet, then rotary wash to boring termination.

Abandonment Method:
Boring backfilled with bentonite grout upon completion

See Exploration and Testing Procedures for a description of field and laboratory procedures used and additional data (If any).

See Supporting Information for explanation of symbols and abbreviations.

Elevations estimated from a site topographic survey.

Notes:

WATER LEVEL OBSERVATIONS

▽ *2' while drilling*

Terracon
650 W Lake St Ste 420
Chicago, IL

Boring Started: 11-27-2017 | Boring Completed: 11-27-2017

Drill Rig: D-120 track | Driller: GEOCON/Robert

Project No.: MR175403

THIS BORING LOG IS NOT VALID IF SEPARATED FROM ORIGINAL REPORT. GEO SMART LOG-NO WELL MR175403 GREEN ERA BIOTECH.GPJ TERRACON_DATATEMPLATE.GDT 12/21/17

BORING LOG NO. B-4

PROJECT: Green Era Biotechnology Plant

CLIENT: Green Era Educational NFP
Chicago, Illinois

SITE: 650 W. 83rd St.
Chicago, Illinois

LOCATION See Exploration Plan

Latitude: 41.7447° Longitude: -87.64°

Approximate Surface Elev: 15 (Ft.) +/-

DEPTH	ELEVATION (Ft.)	GRAPHIC LOG	DEPTH (Ft.)	WATER LEVEL OBSERVATIONS	SAMPLE TYPE	RECOVERY (In.)	FIELD TEST RESULTS	SAMPLE NUMBER	LABORATORY HP (tsf)	UNCONFINED COMPRESSIVE STRENGTH (tsf)	WATER CONTENT (%)	ATTERBERG LIMITS LL-PL-PI
						12	9-11-11 N=22	1			35	
						13	8-13-10 N=23	2	4.50+ (HP)		10	
			5			10	4-4-5 N=9	3	4.00 (HP)		16	
7.0	8+/-					18	2-2-4 N=6	4			30	
9.0	6+/-					18	2-1-3 N=4	5	0.50 (HP)		24	
18.0	-3+/-		10			18	1-2-1 N=3	6	0.50 (HP)		24	
25.0	-10+/-		15			18	2-3-5 N=8	7	2.00 (HP)		16	
			20			18	3-4-7 N=11	8	4.00 (HP)		13	
			25									

URBAN FILL, consisting of varying amounts of sand, gravel, clay, brick, wood, and organics

SILTY SAND (SM), trace gravel and organics, dark gray, loose, wet

LEAN CLAY (CL), trace sand and gravel, gray, medium stiff

LEAN CLAY (CL), trace sand and gravel, gray, very stiff to hard

Boring Terminated at 25 Feet

Stratification lines are approximate. In-situ, the transition may be gradual.

Hammer Type: Automatic

Advancement Method:
3.25" Hollow Stem Auger

Abandonment Method:
Boring backfilled with Auger Cuttings and/or Bentonite

See Exploration and Testing Procedures for a description of field and laboratory procedures used and additional data (If any).

See Supporting Information for explanation of symbols and abbreviations.

Elevations estimated from a site topographic survey.

Notes:
Elevations reference the Chicago City Datum (CCD).

WATER LEVEL OBSERVATIONS

1.5' while drilling

2' upon completion

Terracon
650 W Lake St Ste 420
Chicago, IL

Boring Started: 11-28-2017 | Boring Completed: 11-28-2017

Drill Rig: D-120 track | Driller: GEOCON/Robert

Project No.: MR175403

THIS BORING LOG IS NOT VALID IF SEPARATED FROM ORIGINAL REPORT. GEO SMART LOG-NO WELL MR175403 GREEN ERA BIOTECH.GPJ TERRACON_DATATEMPLATE.GDT 12/21/17

BORING LOG NO. B-5

PROJECT: Green Era Biotechnology Plant

CLIENT: Green Era Educational NFP
Chicago, Illinois

SITE: 650 W. 83rd St.
Chicago, Illinois

LOCATION See Exploration Plan

Latitude: 41.7447° Longitude: -87.6397°

Approximate Surface Elev: 15 (Ft.) +/-

DEPTH	ELEVATION (Ft.)	GRAPHIC LOG	DEPTH (Ft.)	WATER LEVEL OBSERVATIONS	SAMPLE TYPE	RECOVERY (In.)	FIELD TEST RESULTS	SAMPLE NUMBER	LABORATORY HP (tsf)	UNCONFINED COMPRESSIVE STRENGTH (tsf)	WATER CONTENT (%)	ATTERBERG LIMITS LL-PL-PI
						12	7-11-10 N=21	1			6	
				▽		16	19-27-14 N=41	2			10	
				▽								
						16	4-6-5 N=11	3			15	
			5									
						12	2-3-5 N=8	4			25	
						16	1-2-3 N=5	5	0.50 (HP)		22	
			10									
						17	1-1-2 N=3	6	0.50 (HP)		24	
			15									
						15	3-4-4 N=8	7	2.00 (HP)		15	
			20									
						16	5-4-8 N=12	8	4.50 (HP)		13	
			25									

URBAN FILL, consisting of varying amounts of sand, gravel, clay, brick, wood, and organics

Sample 3: Petroleum odor

7.0 8+/-

SILTY SAND (SM), trace gravel and organics, dark gray, loose, wet

9.0 6+/-

LEAN CLAY (CL), trace sand and gravel, gray, medium stiff

18.0 -3+/-

LEAN CLAY (CL), trace sand and gravel, gray, very stiff to hard

25.0 -10+/-

Boring Terminated at 25 Feet

Stratification lines are approximate. In-situ, the transition may be gradual.

Hammer Type: Automatic

Advancement Method:
3.25" Hollow Stem Auger

Abandonment Method:
Boring backfilled with Auger Cuttings and/or Bentonite

See Exploration and Testing Procedures for a description of field and laboratory procedures used and additional data (If any).

See Supporting Information for explanation of symbols and abbreviations.

Elevations estimated from a site topographic survey.

Notes:
Elevations reference the Chicago City Datum (CCD).

WATER LEVEL OBSERVATIONS

▽ *1.5' while drilling*

▽ *3' upon completion*

Terracon
650 W Lake St Ste 420
Chicago, IL

Boring Started: 11-28-2017 | Boring Completed: 11-28-2017

Drill Rig: D-120 track | Driller: GEOCON/Robert

Project No.: MR175403

THIS BORING LOG IS NOT VALID IF SEPARATED FROM ORIGINAL REPORT. GEO SMART LOG-NO WELL MR175403 GREEN ERA BIOTECH.GPJ TERRACON_DATATEMPLATE.GDT 12/21/17

BORING LOG NO. B-6

PROJECT: Green Era Biotechnology Plant

CLIENT: Green Era Educational NFP
Chicago, Illinois

SITE: 650 W. 83rd St.
Chicago, Illinois

LOCATION See Exploration Plan

Latitude: 41.7447° Longitude: -87.6394°

Approximate Surface Elev: 13.5 (Ft.) +/-

DEPTH	ELEVATION (Ft.)	Description
0.0	13.5+/-	**URBAN FILL**, consisting of varying amounts of sand, gravel, clay, brick, wood, and organics
7.0	6.5+/-	**SILTY SAND (SM)**, trace gravel and organics, dark gray, loose, wet
9.0	4.5+/-	**LEAN CLAY (CL)**, trace sand and gravel, gray, soft to medium stiff
22.0	-8.5+/-	**LEAN CLAY (CL)**, trace sand and gravel, gray, hard
25.0	-11.5+/-	***Boring Terminated at 25 Feet***

DEPTH (Ft.)	WATER LEVEL OBSERVATIONS	SAMPLE TYPE	RECOVERY (In.)	FIELD TEST RESULTS	SAMPLE NUMBER	LABORATORY HP (tsf)	UNCONFINED COMPRESSIVE STRENGTH (tsf)	WATER CONTENT (%)	ATTERBERG LIMITS LL-PL-PI
0			14	4-7-8 N=15	1			7	
	▽		16	6-9-5 N=14	2			13	
				3-5-4 N=9	3				
5			17	2-2-1 N=3	4			28	
	▽								
			17	1-2-2 N=4	5	0.50 (HP)		24	
10									
			17	1-1-1 N=2	6	0.25 (HP)		24	
15									
			16	2-2-2 N=4	7	0.25 (HP)		25	
20									
			18	4-6-8 N=14	8	4.00 (HP)		13	
25									

Stratification lines are approximate. In-situ, the transition may be gradual.

Hammer Type: Automatic

Advancement Method:
3.25" Hollow Stem Auger

Abandonment Method:
Boring backfilled with Auger Cuttings and/or Bentonite

See Exploration and Testing Procedures for a description of field and laboratory procedures used and additional data (If any).

See Supporting Information for explanation of symbols and abbreviations.

Elevations estimated from a site topographic survey.

Notes:
Elevations reference the Chicago City Datum (CCD).

WATER LEVEL OBSERVATIONS

▽ *2.5' while drilling*

▽ *8' upon completion*

Terracon
650 W Lake St Ste 420
Chicago, IL

Boring Started: 11-29-2017 | Boring Completed: 11-29-2017

Drill Rig: D-120 track | Driller: GEOCON/Robert

Project No.: MR175403

THIS BORING LOG IS NOT VALID IF SEPARATED FROM ORIGINAL REPORT. GEO SMART LOG-NO WELL MR175403 GREEN ERA BIOTECH.GPJ TERRACON_DATATEMPLATE.GDT 12/21/17

BORING LOG NO. B-7

PROJECT: Green Era Biotechnology Plant

CLIENT: Green Era Educational NFP
Chicago, Illinois

SITE: 650 W. 83rd St.
Chicago, Illinois

LOCATION See Exploration Plan

Latitude: 41.7445° Longitude: -87.6404°

Approximate Surface Elev: 15 (Ft.) +/-

DEPTH	ELEVATION (Ft.)	DESCRIPTION
0.0	15+/-	**URBAN FILL**, consisting of varying amounts of sand, gravel, clay, brick, wood, and organics
6.0	9+/-	
8.0	7+/-	**SILTY SAND (POSSIBLE FILL) (SM)**, with organics, dark gray to black, loose, wet
		LEAN CLAY (CL), trace sand and gravel, gray, medium stiff
21.0	-6+/-	
		LEAN CLAY (CL), trace sand and gravel, gray, hard
25.0	-10+/-	
		Boring Terminated at 25 Feet

DEPTH (Ft.)	WATER LEVEL OBSERVATIONS	SAMPLE TYPE	RECOVERY (In.)	FIELD TEST RESULTS	SAMPLE NUMBER	LABORATORY HP (tsf)	UNCONFINED COMPRESSIVE STRENGTH (tsf)	WATER CONTENT (%)	ATTERBERG LIMITS LL-PL-PI
			12	5-5-5 N=10	1			12	
			13	6-11-8 N=19	2	2.50 (HP)		16	
	▽								
			10	2-3-3 N=6	3			23	
5									
	▽		14	2-2-2 N=4	4			98	
			16	1-1-1 N=2	5	0.50 (HP)		24	
10									
			14	2-2-1 N=3	6	0.50 (HP)		14	
15									
			17	0-2-4 N=6	7	0.50 (HP)		26	
20									
			18	4-5-7 N=12	8	4.00 (HP)		14	
25									

Stratification lines are approximate. In-situ, the transition may be gradual.

Hammer Type: Automatic

Advancement Method:
3.25" Hollow Stem Auger

Abandonment Method:
Boring backfilled with Auger Cuttings and/or Bentonite

See Exploration and Testing Procedures for a description of field and laboratory procedures used and additional data (If any).

See Supporting Information for explanation of symbols and abbreviations.

Elevations estimated from a site topographic survey.

Notes:
Elevations reference the Chicago City Datum (CCD).

WATER LEVEL OBSERVATIONS

▽ *3.5' while drilling*

▽ *7' upon completion*

Terracon
650 W Lake St Ste 420
Chicago, IL

Boring Started: 11-27-2017 | Boring Completed: 11-27-2017

Drill Rig: D-120 track | Driller: GEOCON/Robert

Project No.: MR175403

THIS BORING LOG IS NOT VALID IF SEPARATED FROM ORIGINAL REPORT. GEO SMART LOG-NO WELL MR175403 GREEN ERA BIOTECH.GPJ TERRACON_DATATEMPLATE.GDT 12/21/17

BORING LOG NO. B-8

PROJECT: Green Era Biotechnology Plant

CLIENT: Green Era Educational NFP
Chicago, Illinois

SITE: 650 W. 83rd St.
Chicago, Illinois

LOCATION See Exploration Plan

Latitude: 41.7445° Longitude: -87.6398°

Approximate Surface Elev: 15 (Ft.) +/-

DEPTH	ELEVATION (Ft.)	DEPTH (Ft.)	WATER LEVEL OBSERVATIONS	SAMPLE TYPE	RECOVERY (In.)	FIELD TEST RESULTS	SAMPLE NUMBER	LABORATORY HP (tsf)	UNCONFINED COMPRESSIVE STRENGTH (tsf)	WATER CONTENT (%)	ATTERBERG LIMITS LL-PL-PI
					3	4-12-10 N=22	1			23	
			▽		15	5-11-12 N=23	2			11	
					6	6-5-5 N=10	3			26	
		5									
					16	2-1-1 N=2	4			26	
			▽								
					18	2-2-2 N=4	5	0.50 (HP)		25	
		10									
					18	1-1-2 N=3	6	0.50 (HP)		25	
		15									
					18	2-2-2 N=4	7	0.50 (HP)		24	
		20									
					18	4-5-7 N=12	8	4.50 (HP)		13	
		25									

URBAN FILL, consisting of varying amounts of sand, gravel, clay, brick, wood, and organics

7.0 8+/-

SILTY SAND (SM), trace gravel and organics, dark gray, loose, wet

8.5 6.5+/-

LEAN CLAY (CL), trace sand and gravel, gray, medium stiff

22.0 -7+/-

LEAN CLAY (CL), trace sand and gravel, gray, hard

25.0 -10+/-

Boring Terminated at 25 Feet

Stratification lines are approximate. In-situ, the transition may be gradual.

Hammer Type: Automatic

Advancement Method:
3.25" Hollow Stem Auger

Abandonment Method:
Boring backfilled with Auger Cuttings and/or Bentonite

See Exploration and Testing Procedures for a description of field and laboratory procedures used and additional data (If any).

See Supporting Information for explanation of symbols and abbreviations.

Elevations estimated from a site topographic survey.

Notes:
Elevations reference the Chicago City Datum (CCD).

WATER LEVEL OBSERVATIONS

▽ *2' while drilling*

▽ *8' upon completion*

Terracon
650 W Lake St Ste 420
Chicago, IL

Boring Started: 11-29-2017 | Boring Completed: 11-29-2017

Drill Rig: D-120 track | Driller: GEOCON/Robert

Project No.: MR175403

THIS BORING LOG IS NOT VALID IF SEPARATED FROM ORIGINAL REPORT. GEO SMART LOG-NO WELL MR175403 GREEN ERA BIOTECH.GPJ TERRACON_DATATEMPLATE.GDT 12/21/17

BORING LOG NO. B-9

PROJECT: Green Era Biotechnology Plant

CLIENT: Green Era Educational NFP
Chicago, Illinois

SITE: 650 W. 83rd St.
Chicago, Illinois

LOCATION See Exploration Plan

Latitude: 41.7445° Longitude: -87.6402°

Approximate Surface Elev: 15 (Ft.) +/-

DEPTH	ELEVATION (Ft.)	DEPTH (Ft.)	WATER LEVEL OBSERVATIONS	SAMPLE TYPE	RECOVERY (In.)	FIELD TEST RESULTS	SAMPLE NUMBER	LABORATORY HP (tsf)	UNCONFINED COMPRESSIVE STRENGTH (tsf)	WATER CONTENT (%)	ATTERBERG LIMITS LL-PL-PI
					10	4-9-8 N=17	1			20	
			▽		12	5-9-10 N=19	2			9	
					14	3-3-3 N=6	3			19	
		5	▽								
					14	3-4-4 N=8	4	2.00 (HP)		19	
					15	2-1-1 N=2	5	0.50 (HP)		26	
		10									
					14	2-2-2 N=4	6	0.75 (HP)		25	
		15									
					13	0-2-3 N=5	7	0.50 (HP)		17	
		20									
					15	5-8-7 N=15	8	4.50 (HP)		14	
		25									

URBAN FILL, consisting of varying amounts of sand, gravel, clay, brick, wood, and organics

7.0 / 8+/-

LEAN CLAY (CL), trace sand and gravel, gray, very stiff

8.5 / 6.5+/-

LEAN CLAY (CL), trace sand and gravel, gray, medium stiff

21.0 / -6+/-

LEAN CLAY (CL), trace sand and gravel, gray, hard

25.0 / -10+/-

Boring Terminated at 25 Feet

Stratification lines are approximate. In-situ, the transition may be gradual.

Hammer Type: Automatic

Advancement Method:
3.25" Hollow Stem Auger

Abandonment Method:
Boring backfilled with Auger Cuttings and/or Bentonite

See Exploration and Testing Procedures for a description of field and laboratory procedures used and additional data (If any).

See Supporting Information for explanation of symbols and abbreviations.

Elevations estimated from a site topographic survey.

Notes:
Elevations reference the Chicago City Datum (CCD).

WATER LEVEL OBSERVATIONS

▽ *2' while drilling*

▽ *6' upon completion*

Terracon
650 W Lake St Ste 420
Chicago, IL

Boring Started: 11-27-2017 | Boring Completed: 11-27-2017

Drill Rig: D-120 track | Driller: GEOCON/Robert

Project No.: MR175403

THIS BORING LOG IS NOT VALID IF SEPARATED FROM ORIGINAL REPORT. GEO SMART LOG-NO WELL MR175403 GREEN ERA BIOTECH.GPJ TERRACON_DATATEMPLATE.GDT 12/21/17

BORING LOG NO. B-10

PROJECT: Green Era Biotechnology Plant

CLIENT: Green Era Educational NFP
Chicago, Illinois

SITE: 650 W. 83rd St.
Chicago, Illinois

LOCATION See Exploration Plan

Latitude: 41.7444° Longitude: -87.6394°

Approximate Surface Elev: 13 (Ft.) +/-

DEPTH	ELEVATION (Ft.)	DEPTH (Ft.)	WATER LEVEL OBSERVATIONS	SAMPLE TYPE	RECOVERY (In.)	FIELD TEST RESULTS	SAMPLE NUMBER	LABORATORY HP (tsf)	UNCONFINED COMPRESSIVE STRENGTH (tsf)	WATER CONTENT (%)	ATTERBERG LIMITS LL-PL-PI
					12	4-9-8 N=17	1			17	
			▽		13	9-6-7 N=13	2			25	
4.0	9+/-				12	4-4-3 N=7	3			34	
		5	▽		17	2-2-1 N=3	4	0.50 (HP)		42	
9.0	4+/-				18	1-2-2 N=4	5	0.50 (HP)		25	
		10			18	1-2-1 N=3	6	0.50 (HP)		24	
		15			17	2-2-2 N=4	7	0.25 (HP)		24	
22.0	-9+/-	20									
25.0	-12+/-	25			18	4-7-6 N=13	8	4.00 (HP)		13	

URBAN FILL, consisting of varying amounts of sand, gravel, clay, brick, wood, and organics

SILTY SAND (POSSIBLE FILL) (SM), trace gravel and organics, dark gray to dark brown, loose, wet

LEAN CLAY (CL), trace sand and gravel, gray, soft to medium stiff

LEAN CLAY (CL), trace sand and gravel, gray, hard

Boring Terminated at 25 Feet

Stratification lines are approximate. In-situ, the transition may be gradual.

Hammer Type: Automatic

Advancement Method:
3.25" Hollow Stem Auger

Abandonment Method:
Boring backfilled with Auger Cuttings and/or Bentonite

See Exploration and Testing Procedures for a description of field and laboratory procedures used and additional data (If any).

See Supporting Information for explanation of symbols and abbreviations.

Elevations estimated from a site topographic survey.

Notes:
Elevations reference the Chicago City Datum (CCD).

WATER LEVEL OBSERVATIONS

▽ *2.5' while drilling*

▽ *7' upon completion*

Terracon
650 W Lake St Ste 420
Chicago, IL

Boring Started: 11-29-2017 | Boring Completed: 11-29-2017

Drill Rig: D-120 track | Driller: GEOCON/Robert

Project No.: MR175403

THIS BORING LOG IS NOT VALID IF SEPARATED FROM ORIGINAL REPORT. GEO SMART LOG-NO WELL MR175403 GREEN ERA BIOTECH.GPJ TERRACON_DATATEMPLATE.GDT 12/21/17

BORING LOG NO. B-11

PROJECT: Green Era Biotechnology Plant

CLIENT: Green Era Educational NFP
Chicago, Illinois

SITE: 650 W. 83rd St.
Chicago, Illinois

LOCATION See Exploration Plan

Latitude: 41.7436° Longitude: -87.6411°

Approximate Surface Elev: 16.5 (Ft.) +/-

DEPTH	ELEVATION (Ft.)	DESCRIPTION
0.0	16.5+/-	**URBAN FILL**, consisting of varying amounts of sand, gravel, clay, brick, wood, and organics
7.0	9.5+/-	**SILTY SAND (SM)**, trace gravel, gray, loose, wet
9.0	7.5+/-	**LEAN CLAY (CL)**, trace sand and gravel, gray, medium stiff
15.0	1.5+/-	***Boring Terminated at 15 Feet***

DEPTH (Ft.)	WATER LEVEL OBSERVATIONS	SAMPLE TYPE	RECOVERY (In.)	FIELD TEST RESULTS	SAMPLE NUMBER	LABORATORY HP (tsf)	UNCONFINED COMPRESSIVE STRENGTH (tsf)	WATER CONTENT (%)	ATTERBERG LIMITS LL-PL-PI
			13	4-6-10 N=16	1			12	
	▽		16	6-13-9 N=22	2			5	
	▽		12	18-7-4 N=11	3			13	
5			14	3-4-8 N=12	4			34	
			18	1-2-2 N=4	5	0.50 (HP)		22	
10									
			18	1-1-2 N=3	6	1.00 (HP)		22	
15									

Stratification lines are approximate. In-situ, the transition may be gradual.

Hammer Type: Automatic

Advancement Method:
3.25" Hollow Stem Auger

Abandonment Method:
Boring backfilled with Auger Cuttings and/or Bentonite

See Exploration and Testing Procedures for a description of field and laboratory procedures used and additional data (If any).

See Supporting Information for explanation of symbols and abbreviations.

Elevations estimated from a site topographic survey.

Notes:
Elevations reference the Chicago City Datum (CCD).

WATER LEVEL OBSERVATIONS

▽ *2.5' while drilling*

▽ *4' upon completion*

Terracon
650 W Lake St Ste 420
Chicago, IL

Boring Started: 11-29-2017 | Boring Completed: 11-29-2017

Drill Rig: D-120 track | Driller: GEOCON/Robert

Project No.: MR175403

THIS BORING LOG IS NOT VALID IF SEPARATED FROM ORIGINAL REPORT. GEO SMART LOG-NO WELL MR175403 GREEN ERA BIOTECH.GPJ TERRACON_DATATEMPLATE.GDT 12/21/17

WELL LOG NO. MW-4

PROJECT: Green Era Biotechnology Plant

CLIENT: Green Era Educational NFP
Chicago, Illinois

SITE: 650 W. 83rd St.
Chicago, Illinois

LOCATION: See Exhibit A-2

Latitude: 41.7447° Longitude: -87.64°

Approximate Surface Elev: 15 (Ft.) +/-

DEPTH ELEVATION (Ft.)

GRAPHIC LOG	INSTALLATION DETAILS	DEPTH (Ft.)	WATER LEVEL OBSERVATIONS	SAMPLE TYPE	RECOVERY (In.)	FIELD TEST RESULTS	LABORATORY HP (tsf)	SAMPLE NUMBER	UNCONFINED COMPRESSIVE STRENGTH (tsf)	WATER CONTENT (%)	ATTERBERG LIMITS LL-PL-PI
See boring log B-4 for soil stratigraphy.	5' well stick-up; Bentonite chips (0 to 3 feet) around 1.0" SCH 40 PVC Solid Pipe (to 5 foot depth); #40 Red Flint (80-120mm) washed sand (3 to 15 feet); Slotted screen interval (5 to 15 feet), 1.0" SCH 40 PVC Slotted Pipe (0.010 inch slot)	5 10 15	▽								
Boring Terminated at 15 Feet											

Stratification lines are approximate. In-situ, the transition may be gradual.

Advancement Method:
3.25" Hollow Stem Auger

Abandonment Method:

See Exploration and Testing Procedures for a description of field and laboratory procedures used and additional data (If any).

See Supporting Information for explanation of symbols and abbreviations.

Elevations estimated from a site topographic survey.

Notes:
Elevations reference the Chicago City Datum (CCD).

WATER LEVEL OBSERVATIONS

▽ *5.5' on 12/8/2017*

Terracon
650 W Lake St Ste 420
Chicago, IL

Well Started: 11-28-2017 | Well Completed: 11-28-2017

Drill Rig: D-120 track | Driller: GEOCON/Robert

Project No.: MR175403

THIS BORING LOG IS NOT VALID IF SEPARATED FROM ORIGINAL REPORT. GEO SMART LOG-WELL MR175403 GREEN ERA BIOTECH.GPJ TERRACON_DATATEMPLATE.GDT 12/21/17

BORING LOG NO. B-12

PROJECT: Green Era Biotechnology Plant

CLIENT: Green Era Educational NFP
Chicago, Illinois

SITE: 650 W. 83rd St.
Chicago, Illinois

LOCATION See Exploration Plan

Latitude: 41.744° Longitude: -87.6412°

Approximate Surface Elev: 17 (Ft.) +/-

DEPTH	ELEVATION (Ft.)	DESCRIPTION
0.3	16.5+/-	**GRAVEL SURFACE**, 3 inches
		FILL - SILTY CLAY, trace gravel, sand, and wood, gray and brown
		Sample 2: pounded rock, low recovery
6.0	11+/-	**SILTY SAND (SM)**, trace clay and gravel, dark gray, moist, loose
8.0	9+/-	**LEAN CLAY (CL)**, trace sand and gravel, gray, medium stiff
18.0	-1+/-	**SILTY SAND (SM)**, trace clay and gravel, gray, moist, loose
23.0	-6+/-	**SILTY LEAN CLAY (CL)**, trace sand and gravel, gray, hard

DEPTH (Ft.)	RECOVERY (In.)	FIELD TEST RESULTS	SAMPLE NUMBER	LABORATORY HP (tsf)	UNCONFINED COMPRESSIVE STRENGTH (tsf)	WATER CONTENT (%)	DRY UNIT WEIGHT (pcf)
	16	9-15-20 N=35	1	3.00 (HP)		7	
	1	50/1"	2			3	
5	16	3-2-1 N=3	3			33	
	17	3-1-1 N=2	4	0.50 (HP)		26	
10	18	2-1-1 N=2	5	0.75 (HP)		21	
	17	2-1-1 N=2	6	0.75 (HP)		24	
15							
	18	3-3-3 N=6	7			17	
20							
	18	5-7-8 N=15	8	7.50 (HP)		13	
25							
	18	6-7-9 N=16	9	5.75 (HP)		13	
30							

Stratification lines are approximate. In-situ, the transition may be gradual.

Hammer Type: Automatic

Advancement Method:
3.25" Hollow Stem Auger

Abandonment Method:
Boring backfilled with Auger Cuttings and/or Bentonite

See Exploration and Testing Procedures for a description of field and laboratory procedures used and additional data (If any).

See Supporting Information for explanation of symbols and abbreviations.

Elevations estimated from a site topographic survey.

Notes:

WATER LEVEL OBSERVATIONS

9' while drilling

20' upon completion

Terracon
650 W Lake St, Ste 420
Chicago, IL

Boring Started: 10-02-2018 | Boring Completed: 10-02-2018

Drill Rig: D-120 | Driller: GEOCON/Robert

Project No.: MR175403

THIS BORING LOG IS NOT VALID IF SEPARATED FROM ORIGINAL REPORT. GEO SMART LOG-NO WELL MR175403 GREEN ERA BIOTECH.GPJ TERRACON_DATATEMPLATE.GDT 10/19/18

BORING LOG NO. B-12

PROJECT: Green Era Biotechnology Plant

CLIENT: Green Era Educational NFP
Chicago, Illinois

SITE: 650 W. 83rd St.
Chicago, Illinois

LOCATION See Exploration Plan

Latitude: 41.744° Longitude: -87.6412°

Approximate Surface Elev: 17 (Ft.) +/-

DEPTH	ELEVATION (Ft.)	DEPTH (Ft.)	SAMPLE TYPE	RECOVERY (In.)	FIELD TEST RESULTS	SAMPLE NUMBER	LABORATORY HP (tsf)	WATER CONTENT (%)
SILTY LEAN CLAY (CL), trace sand and gravel, gray, hard *(continued)*								
		35		18	5-8-10 N=18	10	9.00 (HP)	13
		40		18	8-11-14 N=25	11	9.00 (HP)	13
		45		18	35-43-52 N=95	12	9.00 (HP)	9
48.0	-31+/-							
APPARENT BEDROCK				2	50/2"	13		5
49.0	-32+/-							
Boring Terminated at 49 Feet								

Stratification lines are approximate. In-situ, the transition may be gradual.

Hammer Type: Automatic

Advancement Method:
3.25" Hollow Stem Auger

Abandonment Method:
Boring backfilled with Auger Cuttings and/or Bentonite

See Exploration and Testing Procedures for a description of field and laboratory procedures used and additional data (If any).

See Supporting Information for explanation of symbols and abbreviations.

Elevations estimated from a site topographic survey.

Notes:

WATER LEVEL OBSERVATIONS

9' while drilling

20' upon completion

Terracon
650 W Lake St, Ste 420
Chicago, IL

Boring Started: 10-02-2018 | Boring Completed: 10-02-2018

Drill Rig: D-120 | Driller: GEOCON/Robert

Project No.: MR175403

THIS BORING LOG IS NOT VALID IF SEPARATED FROM ORIGINAL REPORT. GEO SMART LOG-NO WELL MR175403 GREEN ERA BIOTECH.GPJ TERRACON_DATATEMPLATE.GDT 10/19/18

BORING LOG NO. B-13

PROJECT: Green Era Biotechnology Plant

CLIENT: Green Era Educational NFP
Chicago, Illinois

SITE: 650 W. 83rd St.
Chicago, Illinois

LOCATION See Exploration Plan

Latitude: 41.7439° Longitude: -87.6409°

Approximate Surface Elev: 16.5 (Ft.) +/-

DEPTH	ELEVATION (Ft.)	GRAPHIC LOG	DEPTH (Ft.)	WATER LEVEL OBSERVATIONS	SAMPLE TYPE	RECOVERY (In.)	FIELD TEST RESULTS	SAMPLE NUMBER	LABORATORY HP (tsf)	UNCONFINED COMPRESSIVE STRENGTH (tsf)	WATER CONTENT (%)	DRY UNIT WEIGHT (pcf)
0.3	16+/-											
GRAVEL SURFACE, 3 inches												
FILL - SILTY SAND, trace clay and gravel, dark brown to gray, moist					X	16	12-12-15 N=27	1			8	
					X	17	6-6-7 N=13	2			10	
6.0	10.5+/-		5									
POSSIBLE FILL - CLAYEY SAND (SC), trace gravel and organics, gray, moist, loose					X	18	2-2-2 N=4	3			32	
8.5	8+/-											
LEAN CLAY (CL), trace sand and gravel, gray, medium stiff to stiff					X	18	2-1-1 N=2	4	1.50 (HP)		22	
			10									
Sample 5: pushed rock, disturbed					X	14	2-2-2 N=4	5	dist.		22	
					■	22		6	1.00 (HP)	1.06	23	106
			15		X	18	2-2-2 N=4	7	1.00 (HP)		21	
18.0	-1.5+/-											
SILTY SAND (SM), trace clay and gravel, gray, moist, loose					X	18	2-2-4 N=6	8	1.25 (HP)		21	
			20									
22.0	-5.5+/-											
SILTY LEAN CLAY (CL), trace sand and gravel, gray, hard					X	18	8-10-11 N=21	9	7.75 (HP)		12	
			25									
					X	16	7-10-14 N=24	10	5.50 (HP)		14	
			30									

Stratification lines are approximate. In-situ, the transition may be gradual.

Hammer Type: Automatic

Advancement Method:
3.25" hollow stem auger to 10 feet, then rotary wash to bedrock. Bedrock cored with NX diamond core barrel.

Abandonment Method:
Boring backfilled with bentonite grout upon completion

See Exploration and Testing Procedures for a description of field and laboratory procedures used and additional data (If any).

See Supporting Information for explanation of symbols and abbreviations.

Elevations estimated from a site topographic survey.

Notes:

WATER LEVEL OBSERVATIONS

Not encountered prior to addition of drilling fluid

Terracon
650 W Lake St, Ste 420
Chicago, IL

Boring Started: 10-02-2018	Boring Completed: 10-02-2018
Drill Rig: D-120	Driller: GEOCON/Robert
Project No.: MR175403	

THIS BORING LOG IS NOT VALID IF SEPARATED FROM ORIGINAL REPORT. GEO SMART LOG-NO WELL MR175403 GREEN ERA BIOTECH.GPJ TERRACON_DATATEMPLATE.GDT 10/19/18

BORING LOG NO. B-13

PROJECT: Green Era Biotechnology Plant

CLIENT: Green Era Educational NFP
Chicago, Illinois

SITE: 650 W. 83rd St.
Chicago, Illinois

LOCATION See Exploration Plan

Latitude: 41.7439° Longitude: -87.6409°

Approximate Surface Elev: 16.5 (Ft.) +/-

DEPTH	ELEVATION (Ft.)	Description	RECOVERY (In.)	FIELD TEST RESULTS	SAMPLE NUMBER	LABORATORY HP (tsf)	WATER CONTENT (%)
		SILTY LEAN CLAY (CL), trace sand and gravel, gray, hard *(continued)*					
			18	7-15-16 N=31	11	9.50 (HP)	10
			16	20-14-15 N=29	12	7.50 (HP)	12
41.0	-24.5+/-						
		SILT (ML), trace gravel, gray, moist, very dense	18	35-40-50 N=90	13		8
48.0	-31.5+/-						
		DOLOMITE, slightly fractured, thin bedding, slightly weathered, strong rock	2	50/2"	14		11
		Unconfined Compression Test at 51' Unit weight = 167 pcf Uniaxial Compressive Strength = 12,324 psi	116	Rec. = 97% RQD = 60%	RUN 1		
58.5	-42+/-						
		Boring Terminated at 58.5 Feet					

Stratification lines are approximate. In-situ, the transition may be gradual.

Hammer Type: Automatic

Advancement Method:
3.25" hollow stem auger to 10 feet, then rotary wash to bedrock. Bedrock cored with NX diamond core barrel.

Abandonment Method:
Boring backfilled with bentonite grout upon completion

See Exploration and Testing Procedures for a description of field and laboratory procedures used and additional data (If any).

See Supporting Information for explanation of symbols and abbreviations.

Elevations estimated from a site topographic survey.

Notes:

WATER LEVEL OBSERVATIONS

Not encountered prior to addition of drilling fluid

Terracon
650 W Lake St, Ste 420
Chicago, IL

Boring Started: 10-02-2018 | Boring Completed: 10-02-2018

Drill Rig: D-120 | Driller: GEOCON/Robert

Project No.: MR175403

THIS BORING LOG IS NOT VALID IF SEPARATED FROM ORIGINAL REPORT. GEO SMART LOG-NO WELL MR175403 GREEN ERA BIOTECH.GPJ TERRACON_DATATEMPLATE.GDT 10/19/18

Rock Core Photograph – Boring B-13 – Run #1
Green Era Biotechnology Plant ■ Chicago, Illinois
October 22, 2018 ■ Terracon Pro ect No. MR175403R1

Terracon

Compressive Strength and Elastic Moduli of Intact Rock Core Specimens under Varying Stress and Temperatures
ASTM D 7012
Method C

Laboratory Services Group *192 Exchange Boulevard* *Glendale Heights, Illinois 60139* *Phone: (630) 717-4263*

Pro ect No.:	MR175403	Tested By:	BCM	Date:	10/18/18
Pro ect Name:	Green Era Biotechnology Plant	Calculated By:	BCM	Date:	10/18/18
Boring No.	B-13 Sample: Core	Chec ed By:	WP	Date:	10/18/18
Depth (ft):	50.0'-51.0'				
Description:	Light Gray Roc Core				

Roc Sample Moisture Condition at Test: [X] As Received [ ] See Remar s [ ] Saturated [ ] Oven Dry

TOLERANCE CHECK

Side Straightness		Ma umum Gap _ 0.020 in						Tolerance Met	PASS
End Flatness: Ma .	Diameter 1a	0.0014	in	Diameter 1b	0.0016	in	_ 0.002 in	Tolerance Met	PASS
End Flatness: Ma .	Diameter 2a	0.0019	in	Diameter 2b	0.0018	in	_ 0.002 in	Tolerance Met	PASS
Perpendicularity Slope	Diameter 1a	0.0027		Diameter 1b	0.0029		_ 0.0043	Tolerance Met	PASS
Perpendicularity Slope	Diameter 2a	0.0031		Diameter 2b	0.0038		_ 0.0043	Tolerance Met	PASS

Length (mm):	1) 3.995	2) 3.994	3) 3.999	Avg.	3.996	in	
Diameter (mm):	1) 1.947	2) 1.954	3) 1.949	Avg.	1.950	in	
Uniaxial Compressive Strength:		**12,324**	psi	Mass	522.22	grams	
Load:		**36,800**	lbs	Mass	1.151	lb	
L/D:		**2.0**		**Unit Weight:**	**166.7**	pcf	

YOUNG'S MODULUS	
E_t (50 Co)	-

POISSON'S RATIO	
u_t (50 Co)	-

REMARKS: Some Suface Crac ing

Before

After

BORING LOG NO. B-14

PROJECT: Green Era Biotechnology Plant

CLIENT: Green Era Educational NFP
Chicago, Illinois

SITE: 650 W. 83rd St.
Chicago, Illinois

LOCATION See Exploration Plan

Latitude: 41.7441° Longitude: -87.641°

Approximate Surface Elev: 17 (Ft.) +/-

DEPTH	ELEVATION (Ft.)	DESCRIPTION
0.3	16.5+/-	**WOOD CHIPS**, 3 inches
		FILL - SILTY CLAY, trace gravel, sand, and wood, gray and brown
		Sample 2: pounded rock, low recovery
6.0	11+/-	**POSSIBLE FILL - SILTY SAND (SM)**, trace clay and gravel, dark gray, moist, loose
8.0	9+/-	**LEAN CLAY (CL)**, trace sand and gravel, gray, medium stiff
21.0	-4+/-	**SILTY LEAN CLAY (CL)**, trace sand and gravel, gray, hard

DEPTH (Ft.)	WATER LEVEL OBSERVATIONS	SAMPLE TYPE	RECOVERY (In.)	FIELD TEST RESULTS	SAMPLE NUMBER	LABORATORY HP (tsf)	UNCONFINED COMPRESSIVE STRENGTH (tsf)	WATER CONTENT (%)	DRY UNIT WEIGHT (pcf)
			16	10-26-14 N=40	1	5.00 (HP)		16	
5			15	1-1-1 N=2	2	3.50 (HP)		15	
	▽		15	2-2-2 N=4	3			28	
10			16	3-2-2 N=4	4	0.75 (HP)		23	
			14	3-3-2 N=5	5	0.75 (HP)		23	
15	▽		16	3-2-2 N=4	6	0.50 (HP)		24	
20			18	3-5-5 N=10	7			22	
25			18	7-7-9 N=16	8	6.75 (HP)		13	
30			18	6-8-11 N=19	9	7.50 (HP)		13	

Stratification lines are approximate. In-situ, the transition may be gradual.

Hammer Type: Automatic

Advancement Method:
3.25" hollow stem auger to bedrock

Abandonment Method:
Boring backfilled with Auger Cuttings and/or Bentonite

See Exploration and Testing Procedures for a description of field and laboratory procedures used and additional data (If any).

See Supporting Information for explanation of symbols and abbreviations.

Elevations estimated from a site topographic survey.

Notes:

WATER LEVEL OBSERVATIONS

▽ *6' while drilling*

▽ *15' upon completion*

Terracon
650 W Lake St, Ste 420
Chicago, IL

Boring Started: 10-02-2018 | Boring Completed: 10-02-2018

Drill Rig: D-120 | Driller: GEOCON/Robert

Project No.: MR175403

THIS BORING LOG IS NOT VALID IF SEPARATED FROM ORIGINAL REPORT. GEO SMART LOG-NO WELL MR175403 GREEN ERA BIOTECH.GPJ TERRACON_DATATEMPLATE.GDT 10/19/18

BORING LOG NO. B-14

PROJECT: Green Era Biotechnology Plant

CLIENT: Green Era Educational NFP
Chicago, Illinois

SITE: 650 W. 83rd St.
Chicago, Illinois

LOCATION See Exploration Plan

Latitude: 41.7441° Longitude: -87.641°

Approximate Surface Elev: 17 (Ft.) +/-

DEPTH	ELEVATION (Ft.)	GRAPHIC LOG	DEPTH (Ft.)	WATER LEVEL OBSERVATIONS	SAMPLE TYPE	RECOVERY (In.)	FIELD TEST RESULTS	SAMPLE NUMBER	LABORATORY HP (tsf)	UNCONFINED COMPRESSIVE STRENGTH (tsf)	WATER CONTENT (%)	DRY UNIT WEIGHT (pcf)
	SILTY LEAN CLAY (CL), trace sand and gravel, gray, hard *(continued)*											
					X	18	7-9-13 N=22	10	7.50 (HP)		10	
			35									
					X	18	7-8-12 N=20	11	9.00 (HP)		12	
			40									
					X	18	16-40-48 N=88	12	9.50 (HP)		10	
			45									
48.5	-31.5+/-											
49.0	**APPARENT BEDROCK** -32+/-						50/1"	13			6	
	Boring Terminated at 49 Feet											

Stratification lines are approximate. In-situ, the transition may be gradual.

Hammer Type: Automatic

Advancement Method:
3.25" hollow stem auger to bedrock

Abandonment Method:
Boring backfilled with Auger Cuttings and/or Bentonite

See Exploration and Testing Procedures for a description of field and laboratory procedures used and additional data (If any).

See Supporting Information for explanation of symbols and abbreviations.

Elevations estimated from a site topographic survey.

Notes:

WATER LEVEL OBSERVATIONS

▽ *6' while drilling*

▽ *15' upon completion*

Terracon
650 W Lake St, Ste 420
Chicago, IL

Boring Started: 10-02-2018 | Boring Completed: 10-02-2018

Drill Rig: D-120 | Driller: GEOCON/Robert

Project No.: MR175403

THIS BORING LOG IS NOT VALID IF SEPARATED FROM ORIGINAL REPORT. GEO SMART LOG-NO WELL MR175403 GREEN ERA BIOTECH.GPJ TERRACON_DATATEMPLATE.GDT 10/19/18

BORING LOG NO. B-15

PROJECT: Green Era Biotechnology Plant

CLIENT: Green Era Educational NFP
Chicago, Illinois

SITE: 650 W. 83rd St.
Chicago, Illinois

LOCATION See Exploration Plan

Latitude: 41.7444° Longitude: -87.6411°

Approximate Surface Elev: 17 (Ft.) +/-

DEPTH	ELEVATION (Ft.)	DESCRIPTION
0.3	16.5+/-	**GRAVEL SURFACE**, 3 inches
		FILL - SANDY CLAY, trace gravel, sand, brick, and wood, dark gray and brown, moist
6.0	11+/-	**SILTY SAND (SM)**, trace organics, clay, and gravel, dark gray, wet, loose
10.0	7+/-	**LEAN CLAY (CL)**, trace sand and gravel, gray, medium stiff
17.5	-0.5+/-	**LEAN CLAY (CL)**, trace sand and gravel, gray, very stiff
23.0	-6+/-	**SILTY LEAN CLAY (CL)**, trace sand and gravel, gray, hard

DEPTH (Ft.)	WATER LEVEL OBSERVATIONS	SAMPLE TYPE	RECOVERY (In.)	FIELD TEST RESULTS	SAMPLE NUMBER	LABORATORY HP (tsf)	UNCONFINED COMPRESSIVE STRENGTH (tsf)	WATER CONTENT (%)	DRY UNIT WEIGHT (pcf)
			16	14-13-11 N=24	1			15	
5			2	21-28-19 N=47	2			16	
			17	3-3-3 N=6	3			33	
			10	1-1-1 N=2	4			24	
10	▽								
			18	1-1-1 N=2	5	0.75 (HP)		24	
			18	1-2-1 N=3	6	0.75 (HP)		24	
15									
			21		7	0.75 (HP)	1.85	21	111
20									
			18	7-9-13 N=22	8	6.75 (HP)		12	
25									
			18	9-7-12 N=19	9	5.50 (HP)		13	
30									

Stratification lines are approximate. In-situ, the transition may be gradual.

Hammer Type: Automatic

Advancement Method:
3.25" hollow stem auger to bedrock. Bedrock cored with NX diamond core barrel.

Abandonment Method:
Boring backfilled with bentonite grout upon completion

See Exploration and Testing Procedures for a description of field and laboratory procedures used and additional data (If any).

See Supporting Information for explanation of symbols and abbreviations.

Elevations estimated from a site topographic survey.

Notes:

WATER LEVEL OBSERVATIONS

▽ *11' while drilling*

Terracon
650 W Lake St, Ste 420
Chicago, IL

Boring Started: 10-05-2018 | Boring Completed: 10-05-2018

Drill Rig: D-120 | Driller: GEOCON/Robert

Project No.: MR175403

THIS BORING LOG IS NOT VALID IF SEPARATED FROM ORIGINAL REPORT. GEO SMART LOG-NO WELL MR175403 GREEN ERA BIOTECH.GPJ TERRACON_DATATEMPLATE.GDT 10/19/18

BORING LOG NO. B-15

PROJECT: Green Era Biotechnology Plant

CLIENT: Green Era Educational NFP
Chicago, Illinois

SITE: 650 W. 83rd St.
Chicago, Illinois

LOCATION See Exploration Plan

Latitude: 41.7444° Longitude: -87.6411°

Approximate Surface Elev: 17 (Ft.) +/-

DEPTH	ELEVATION (Ft.)	DEPTH (Ft.)	RECOVERY (In.)	FIELD TEST RESULTS	SAMPLE NUMBER	LABORATORY HP (tsf)	WATER CONTENT (%)
SILTY LEAN CLAY (CL), trace sand and gravel, gray, hard *(continued)*							
		35	18	8-9-11 N=20	10	6.50 (HP)	13
		40	18	6-6-9 N=15	11	4.50 (HP)	14
42.0	-25+/-						
SILT (ML), trace clay and gravel, gray, moist, very dense		45	18	20-35-49 N=84	12		12
48.5	-31.5+/-		1	50/1"	13		21
DOLOMITE, slightly fractured, thin bedding, unweathered, very strong Unconfined Compression Test at 51' Unit weight = 172 pcf Uniaxial Compressive Strength = 16,417 psi		50	120	Rec. = 100% RQD = 90%	RUN 1		
		55					
58.5	-41.5+/-						
Boring Terminated at 58.5 Feet							

GRAPHIC LOG | WATER LEVEL OBSERVATIONS | SAMPLE TYPE | UNCONFINED COMPRESSIVE STRENGTH (tsf) | DRY UNIT WEIGHT (pcf)

Stratification lines are approximate. In-situ, the transition may be gradual.

Hammer Type: Automatic

Advancement Method:
3.25" hollow stem auger to bedrock. Bedrock cored with NX diamond core barrel.

Abandonment Method:
Boring backfilled with bentonite grout upon completion

See Exploration and Testing Procedures for a description of field and laboratory procedures used and additional data (If any).

See Supporting Information for explanation of symbols and abbreviations.

Elevations estimated from a site topographic survey.

Notes:

WATER LEVEL OBSERVATIONS

▽ *11' while drilling*

Terracon
650 W Lake St, Ste 420
Chicago, IL

Boring Started: 10-05-2018 | Boring Completed: 10-05-2018

Drill Rig: D-120 | Driller: GEOCON/Robert

Project No.: MR175403

THIS BORING LOG IS NOT VALID IF SEPARATED FROM ORIGINAL REPORT. GEO SMART LOG-NO WELL MR175403 GREEN ERA BIOTECH.GPJ TERRACON_DATATEMPLATE.GDT 10/19/18

Rock Core Photograph – Boring B-15 – Run #1
Green Era Biotechnology Plant ■ Chicago, Illinois
October 22, 2018 ■ Terracon Pro ect No. MR175403R1

Terracon

Compressive Strength and Elastic Moduli of Intact Rock Core Specimens under Varying Stress and Temperatures
ASTM D 7012
Method C

Laboratory Services Group *192 Exchange Boulevard* *Glendale Heights, Illinois 60139* *Phone: (630) 717-4263*

Pro ect No.:	MR175403	Tested By:	BCM	Date:	10/18/18
Pro ect Name:	Green Era Biotechnology Plant	Calculated By:	BCM	Date:	10/18/18
Boring No.	B-15 Sample: Core	Chec ed By:	WP	Date:	10/18/18
Depth (ft):	50.0'-51.0'				
Description:	Light Gray Roc Core				

Roc Sample Moisture Condition at Test: [X] As Received [ ] See Remar s [ ] Saturated [ ] Oven Dry

TOLERANCE CHECK

Side Straightness		Ma umum Gap _ 0.020 in						Tolerance Met	PASS
End Flatness: Ma .	Diameter 1a	0.0019	in	Diameter 1b	0.0017	in	_ 0.002 in	Tolerance Met	PASS
End Flatness: Ma .	Diameter 2a	0.0016	in	Diameter 2b	0.0015	in	_ 0.002 in	Tolerance Met	PASS
Perpendicularity Slope	Diameter 1a	0.0033		Diameter 1b	0.0031		_ 0.0043	Tolerance Met	PASS
Perpendicularity Slope	Diameter 2a	0.0037		Diameter 2b	0.0040		_ 0.0043	Tolerance Met	PASS

Length (mm):	1) 3.995	2) 3.994	3) 3.999	Avg. 3.996	in		
Diameter (mm):	1) 1.947	2) 1.954	3) 3.949	Avg. 1.950	in		
Uniaxial Compressive Strength:		**16,417**	psi	Mass 538.78	grams		
Load:		**49,020**	lbs	Mass 1.188	lb		
L/D:		**2.0**		**Unit Weight:**	**172.0**	pcf	

YOUNG'S MODULUS	
E_t (50 Co)	-

POISSON'S RATIO	
u_t (50 Co)	-

REMARKS:

Before

After

BORING LOG NO. B-16

PROJECT: Green Era Biotechnology Plant

CLIENT: Green Era Educational NFP
Chicago, Illinois

SITE: 650 W. 83rd St.
Chicago, Illinois

LOCATION See Exploration Plan

Latitude: 41.7443° Longitude: -87.6408°

Approximate Surface Elev: 17 (Ft.) +/-

DEPTH	ELEVATION (Ft.)	DESCRIPTION
0.3	16.5+/-	**GRAVEL SURFACE**, 3 inches
		FILL - SILTY SAND, some gravel, clay, brick, and wood, gray and dark brown
		Sample 2: predominately clay
8.0	9+/-	**SILTY SAND (SM)**, trace gravel, gray, moist, loose
10.5	6.5+/-	**LEAN CLAY (CL)**, trace sand and gravel, gray, medium stiff to stiff
21.0	-4+/-	**SILTY LEAN CLAY (CL)**, trace sand and gravel, gray, hard

DEPTH (Ft.)	WATER LEVEL OBSERVATIONS	SAMPLE TYPE	RECOVERY (In.)	FIELD TEST RESULTS	SAMPLE NUMBER	LABORATORY HP (tsf)	UNCONFINED COMPRESSIVE STRENGTH (tsf)	WATER CONTENT (%)	DRY UNIT WEIGHT (pcf)
			15	5-8-4 N=12	1			32	
			18	6-7-8 N=15	2	3.50 (HP)		18	
5			9	5-5-3 N=8	3			24	
			15	2-1-2 N=3	4			27	
10	▽								
			18	2-1-1 N=2	5	0.75 (HP)		23	
			18	1-2-3 N=5	6	0.50 (HP)		23	
15									
20	▽		18	4-4-4 N=8	7	1.75 (HP)		20	
			0	21-10-10 N=20	8				
25									
			15	13-10-12 N=22	9	5.50 (HP)		13	
30									

Stratification lines are approximate. In-situ, the transition may be gradual.

Hammer Type: Automatic

Advancement Method:
3.25" hollow stem auger to bedrock

Abandonment Method:
Boring backfilled with Auger Cuttings and/or Bentonite

See Exploration and Testing Procedures for a description of field and laboratory procedures used and additional data (If any).

See Supporting Information for explanation of symbols and abbreviations.

Elevations estimated from a site topographic survey.

Notes:

WATER LEVEL OBSERVATIONS

▽ *11' while drilling*

▽ *20' upon completion*

Terracon
650 W Lake St, Ste 420
Chicago, IL

Boring Started: 10-03-2018 | Boring Completed: 10-03-2018

Drill Rig: D-120 | Driller: GEOCON/Robert

Project No.: MR175403

THIS BORING LOG IS NOT VALID IF SEPARATED FROM ORIGINAL REPORT. GEO SMART LOG-NO WELL MR175403 GREEN ERA BIOTECH.GPJ TERRACON_DATATEMPLATE.GDT 10/19/18

BORING LOG NO. B-16

PROJECT: Green Era Biotechnology Plant

CLIENT: Green Era Educational NFP
Chicago, Illinois

SITE: 650 W. 83rd St.
Chicago, Illinois

LOCATION See Exploration Plan

Latitude: 41.7443° Longitude: -87.6408°

Approximate Surface Elev: 17 (Ft.) +/-

DEPTH	ELEVATION (Ft.)	DEPTH (Ft.)	WATER LEVEL OBSERVATIONS	SAMPLE TYPE	RECOVERY (In.)	FIELD TEST RESULTS	SAMPLE NUMBER	LABORATORY HP (tsf)	UNCONFINED COMPRESSIVE STRENGTH (tsf)	WATER CONTENT (%)	DRY UNIT WEIGHT (pcf)
SILTY LEAN CLAY (CL), trace sand and gravel, gray, hard *(continued)*											
		35			18	9-11-16 N=27	10	5.00 (HP)		13	
38.0	-21+/-										
SILTY SAND (SM), trace gravel, gray, moist, medium dense											
		40			18	6-8-10 N=18	11			17	
42.0	-25+/-										
SILTY CLAY (CL/ML), trace gravel, gray, moist, hard											
		45			18	21-40-45 N=85	12	6.00 (HP)		11	
48.5	-31.5+/-										
49.0 **APPARENT BEDROCK**	-32+/-				1	50/2"	13			10	

Boring Terminated at 49 Feet

Stratification lines are approximate. In-situ, the transition may be gradual.

Hammer Type: Automatic

Advancement Method:
3.25" hollow stem auger to bedrock

Abandonment Method:
Boring backfilled with Auger Cuttings and/or Bentonite

See Exploration and Testing Procedures for a description of field and laboratory procedures used and additional data (If any).

See Supporting Information for explanation of symbols and abbreviations.

Elevations estimated from a site topographic survey.

Notes:

WATER LEVEL OBSERVATIONS

11' while drilling

20' upon completion

Terracon
650 W Lake St, Ste 420
Chicago, IL

Boring Started: 10-03-2018	Boring Completed: 10-03-2018
Drill Rig: D-120	Driller: GEOCON/Robert
Project No.: MR175403	

THIS BORING LOG IS NOT VALID IF SEPARATED FROM ORIGINAL REPORT. GEO SMART LOG-NO WELL MR175403 GREEN ERA BIOTECH.GPJ TERRACON_DATATEMPLATE.GDT 10/19/18

BORING LOG NO. B-17

PROJECT: Green Era Biotechnology Plant

CLIENT: Green Era Educational NFP
Chicago, Illinois

SITE: 650 W. 83rd St.
Chicago, Illinois

LOCATION See Exploration Plan

Latitude: 41.7447° Longitude: -87.641°

Approximate Surface Elev: 16.5 (Ft.) +/-

DEPTH	ELEVATION (Ft.)	DESCRIPTION
0.3	16+/-	**WOOD CHIPS**, 3 inches
		FILL - SILTY SAND, trace clay, gravel, organics, and brick, dark brown to black, moist
		Sample 2: pounded rock, no recovery.
8.0	8.5+/-	
		LEAN CLAY WITH SAND (CL), trace gravel and organics, dark gray, moist, medium stiff
10.5	6+/-	
		LEAN CLAY (CL), trace sand and gravel, gray, medium stiff
18.0	-1.5+/-	
		SILTY LEAN CLAY (CL), trace sand and gravel, gray, very stiff to hard
		Sample 8: pounded rock, no recovery.

DEPTH (Ft.)	WATER LEVEL OBSERVATIONS	SAMPLE TYPE	RECOVERY (In.)	FIELD TEST RESULTS	SAMPLE NUMBER	LABORATORY HP (tsf)	UNCONFINED COMPRESSIVE STRENGTH (tsf)	WATER CONTENT (%)	DRY UNIT WEIGHT (pcf)
			8	7-16-18 N=34	1			20	
5			0	18-13-6 N=19	2				
			16	8-6-4 N=10	3			33	
	▽		18	3-1-1 N=2	4	0.50 (HP)		29	
10	▽		18	2-1-2 N=3	5	0.50 (HP)		18	
			14	4-2-2 N=4	6	0.75 (HP)		22	
15									
			18	2-4-7 N=11	7	2.50 (HP)		15	
20									
			0	13-13-14 N=27	8				
25									
			18	7-7-11 N=18	9	3.50 (HP)		15	
30									

Stratification lines are approximate. In-situ, the transition may be gradual.

Hammer Type: Automatic

Advancement Method:
3.25" hollow stem auger to bedrock

Abandonment Method:
Boring backfilled with Auger Cuttings and/or Bentonite

See Exploration and Testing Procedures for a description of field and laboratory procedures used and additional data (If any).

See Supporting Information for explanation of symbols and abbreviations.

Elevations estimated from a site topographic survey.

Notes:

WATER LEVEL OBSERVATIONS

▽ *8' while drilling*

▽ *11' upon completion*

Terracon
650 W Lake St, Ste 420
Chicago, IL

Boring Started: 10-02-2018 | Boring Completed: 10-02-2018

Drill Rig: D-120 | Driller: GEOCON/Robert

Project No.: MR175403

THIS BORING LOG IS NOT VALID IF SEPARATED FROM ORIGINAL REPORT. GEO SMART LOG-NO WELL MR175403 GREEN ERA BIOTECH.GPJ TERRACON_DATATEMPLATE.GDT 10/19/18

BORING LOG NO. B-17

PROJECT: Green Era Biotechnology Plant

CLIENT: Green Era Educational NFP
Chicago, Illinois

SITE: 650 W. 83rd St.
Chicago, Illinois

LOCATION See Exploration Plan

Latitude: 41.7447° Longitude: -87.641°

Approximate Surface Elev: 16.5 (Ft.) +/-

DEPTH	ELEVATION (Ft.)	DEPTH (Ft.)	RECOVERY (In.)	FIELD TEST RESULTS	SAMPLE NUMBER	LABORATORY HP (tsf)	WATER CONTENT (%)
	SILTY LEAN CLAY (CL), trace sand and gravel, gray, very stiff to hard *(continued)*						
		35	18	6-7-10 N=17	10	4.00 (HP)	15
37.0	-20.5+/-						
	SILT (ML), trace clay and gravel, gray, wet, dense						
		40	6	7-18-20 N=38	11		17
41.0	-24.5+/-						
	SILTY CLAY (CL/ML), trace gravel, gray, moist, hard						
		45	18	33-35-49 N=84	12	6.00 (HP)	12
48.5	-32+/-						
49.0	**APPARENT BEDROCK** -32.5+/-		1	50/5"	13		14
	Boring Terminated at 49 Feet						

Stratification lines are approximate. In-situ, the transition may be gradual.

Hammer Type: Automatic

Advancement Method:
3.25" hollow stem auger to bedrock

Abandonment Method:
Boring backfilled with Auger Cuttings and/or Bentonite

See Exploration and Testing Procedures for a description of field and laboratory procedures used and additional data (If any).

See Supporting Information for explanation of symbols and abbreviations.

Elevations estimated from a site topographic survey.

Notes:

WATER LEVEL OBSERVATIONS

8' while drilling

11' upon completion

Terracon
650 W Lake St, Ste 420
Chicago, IL

Boring Started: 10-02-2018 | Boring Completed: 10-02-2018

Drill Rig: D-120 | Driller: GEOCON/Robert

Project No.: MR175403

THIS BORING LOG IS NOT VALID IF SEPARATED FROM ORIGINAL REPORT. GEO SMART LOG-NO WELL MR175403 GREEN ERA BIOTECH.GPJ TERRACON_DATATEMPLATE.GDT 10/19/18

BORING LOG NO. B-18

PROJECT: Green Era Biotechnology Plant

CLIENT: Green Era Educational NFP
Chicago, Illinois

SITE: 650 W. 83rd St.
Chicago, Illinois

LOCATION See Exploration Plan

Latitude: 41.7446° Longitude: -87.6407°

Approximate Surface Elev: 16.5 (Ft.) +/-

DEPTH	ELEVATION (Ft.)	GRAPHIC LOG	DEPTH (Ft.)	WATER LEVEL OBSERVATIONS	SAMPLE TYPE	RECOVERY (In.)	FIELD TEST RESULTS	SAMPLE NUMBER	LABORATORY HP (tsf)	UNCONFINED COMPRESSIVE STRENGTH (tsf)	WATER CONTENT (%)	DRY UNIT WEIGHT (pcf)
0.3	16+/-											
GRAVEL SURFACE, 3 inches												
FILL - SILTY SAND, some gravel, clay, brick, and wood, gray and dark brown					X	12	6-10-8 N=18	1			12	
					X	18	4-4-6 N=10	2	6.00 (HP)		16	
Sample 2: predominately clay			5		X	10	4-3-2 N=5	3			23	
8.0	8.5+/-			▽								
LEAN CLAY (CL), trace sand and gravel, gray, medium stiff					X	18	3-2-1 N=3	4	0.75 (HP)		29	
			10	▽	X	18	1-1-1 N=2	5	0.50 (HP)		24	
					X	18	1-1-2 N=3	6	0.50 (HP)		24	
18.0	-1.5+/-		15									
LEAN CLAY (CL), trace sand and gravel, gray, very stiff					X	18	2-2-4 N=6	7	2.50 (HP)		14	
22.0	-5.5+/-		20									
SILTY LEAN CLAY (CL), trace sand and gravel, gray, hard					X	18	6-8-7 N=15	8	6.50 (HP)		13	
			25									
					X	18	8-9-11 N=20	9	4.00 (HP)		14	
			30									

Stratification lines are approximate. In-situ, the transition may be gradual.

Hammer Type: Automatic

Advancement Method:
3.25" hollow stem auger to bedrock

Abandonment Method:
Boring backfilled with Auger Cuttings and/or Bentonite

See Exploration and Testing Procedures for a description of field and laboratory procedures used and additional data (If any).

See Supporting Information for explanation of symbols and abbreviations.

Elevations estimated from a site topographic survey.

Notes:

WATER LEVEL OBSERVATIONS

▽ *11.5' while drilling*

▽ *8' upon completion*

Terracon
650 W Lake St, Ste 420
Chicago, IL

Boring Started: 10-03-2018 | Boring Completed: 10-03-2018

Drill Rig: D-120 | Driller: GEOCON/Robert

Project No.: MR175403

THIS BORING LOG IS NOT VALID IF SEPARATED FROM ORIGINAL REPORT. GEO SMART LOG-NO WELL MR175403 GREEN ERA BIOTECH.GPJ TERRACON_DATATEMPLATE.GDT 10/19/18

BORING LOG NO. B-18

PROJECT: Green Era Biotechnology Plant

CLIENT: Green Era Educational NFP
Chicago, Illinois

SITE: 650 W. 83rd St.
Chicago, Illinois

LOCATION See Exploration Plan

Latitude: 41.7446° Longitude: -87.6407°

Approximate Surface Elev: 16.5 (Ft.) +/-

DEPTH	ELEVATION (Ft.)	DESCRIPTION
		SILTY LEAN CLAY (CL), trace sand and gravel, gray, hard *(continued)*
38.0	-21.5+/-	
		GRAVELLY SILT (ML), trace clay, gray, wet, medium dense
41.0	-24.5+/-	
		SILT (ML), trace sand and gravel, gray, moist, very dense
48.5	-32+/-	
49.0	-32.5+/-	**APPARENT BEDROCK**
		Boring Terminated at 49 Feet

DEPTH (Ft.)	SAMPLE TYPE	RECOVERY (In.)	FIELD TEST RESULTS	SAMPLE NUMBER	LABORATORY HP (tsf)	WATER CONTENT (%)
35		17	6-8-11 N=19	10	4.00 (HP)	14
40		10	7-11-6 N=17	11		8
45		17	36-35-42 N=77	12		11
		3	50/3"	13		10

Stratification lines are approximate. In-situ, the transition may be gradual.

Hammer Type: Automatic

Advancement Method:
3.25" hollow stem auger to bedrock

Abandonment Method:
Boring backfilled with Auger Cuttings and/or Bentonite

See Exploration and Testing Procedures for a description of field and laboratory procedures used and additional data (If any).

See Supporting Information for explanation of symbols and abbreviations.

Elevations estimated from a site topographic survey.

Notes:

WATER LEVEL OBSERVATIONS

11.5' while drilling

8' upon completion

Terracon
650 W Lake St, Ste 420
Chicago, IL

Boring Started: 10-03-2018 | Boring Completed: 10-03-2018

Drill Rig: D-120 | Driller: GEOCON/Robert

Project No.: MR175403

THIS BORING LOG IS NOT VALID IF SEPARATED FROM ORIGINAL REPORT. GEO SMART LOG-NO WELL MR175403 GREEN ERA BIOTECH.GPJ TERRACON_DATATEMPLATE.GDT 10/19/18

BORING LOG NO. B-19

PROJECT: Green Era Biotechnology Plant

CLIENT: Green Era Educational NFP
Chicago, Illinois

SITE: 650 W. 83rd St.
Chicago, Illinois

LOCATION See Exploration Plan

Latitude: 41.7449° Longitude: -87.6408°

Approximate Surface Elev: 16 (Ft.) +/-

DEPTH	ELEVATION (Ft.)	DESCRIPTION
0.3	15.5+/-	**TOPSOIL**, 4 inches
		FILL - SILTY SAND, trace clay and gravel, dark brown to gray, moist
		Sample 2: predominately clay.
		Sample 3: pushed rock, limited recovery.
8.0	8+/-	
		LEAN CLAY (CL), trace sand and gravel, gray, soft to medium stiff
18.0	-2+/-	
		LEAN CLAY (CL), trace sand and gravel, gray, very stiff
22.0	-6+/-	
		SILTY LEAN CLAY (CL), trace sand and gravel, gray, hard

DEPTH (Ft.)	WATER LEVEL OBSERVATIONS	SAMPLE TYPE	RECOVERY (In.)	FIELD TEST RESULTS	SAMPLE NUMBER	LABORATORY HP (tsf)	UNCONFINED COMPRESSIVE STRENGTH (tsf)	WATER CONTENT (%)	DRY UNIT WEIGHT (pcf)
			3	6-8-9 N=17	1			11	
5			10	5-3-3 N=6	2	2.00 (HP)		18	
	▽			3-5-3 N=8	3			31	
10			13	1-1-1 N=2	4	0.25 (HP)		36	
			15	1-2-2 N=4	5	0.50 (HP)		25	
15			18	1-1-2 N=3	6	0.50 (HP)		23	
					7	2.25 (HP)	2.03	19	107
20									
			18	4-7-10 N=17	8	5.00 (HP)		14	
25									
			18	5-7-10 N=17	9	6.00 (HP)		13	
30									

Stratification lines are approximate. In-situ, the transition may be gradual.

Hammer Type: Automatic

Advancement Method:
3.25" hollow stem auger to bedrock. Bedrock cored with NX diamond core barrel.

Abandonment Method:
Boring backfilled with bentonite grout upon completion

See Exploration and Testing Procedures for a description of field and laboratory procedures used and additional data (If any).

See Supporting Information for explanation of symbols and abbreviations.

Elevations estimated from a site topographic survey.

Notes:

WATER LEVEL OBSERVATIONS

▽ *7' while drilling*

Terracon
650 W Lake St, Ste 420
Chicago, IL

Boring Started: 10-08-2018	Boring Completed: 10-08-2018
Drill Rig: D-120	Driller: GEOCON/Robert
Project No.: MR175403	

THIS BORING LOG IS NOT VALID IF SEPARATED FROM ORIGINAL REPORT. GEO SMART LOG-NO WELL MR175403 GREEN ERA BIOTECH.GPJ TERRACON_DATATEMPLATE.GDT 10/19/18

BORING LOG NO. B-19

PROJECT: Green Era Biotechnology Plant

CLIENT: Green Era Educational NFP
Chicago, Illinois

SITE: 650 W. 83rd St.
Chicago, Illinois

LOCATION See Exploration Plan

Latitude: 41.7449° Longitude: -87.6408°

Approximate Surface Elev: 16 (Ft.) +/-

DEPTH	ELEVATION (Ft.)	DEPTH (Ft.)	RECOVERY (In.)	FIELD TEST RESULTS	SAMPLE NUMBER	LABORATORY HP (tsf)	WATER CONTENT (%)
	SILTY LEAN CLAY (CL), trace sand and gravel, gray, hard *(continued)*						
		35	18	6-9-10 N=19	10	5.00 (HP)	14
		40	18	5-10-12 N=22	11	3.75 (HP)	15
41.0	-25+/-						
	SILT (ML), trace clay and gravel, gray, moist, dense to very dense	45	18	6-13-28 N=41	12		9
48.5	-32.5+/-		7	36-50/1"	13		9
	DOLOMITE, slightly fractured, thin bedding, unweathered, strong rock Unconfined Compression Test at 51' Unit weight = 172 pcf Uniaxial Compressive Strength = 13,155 psi	50 55	120	Rec. = 81% RQD = 100%	RUN 1		
59.0	-43+/-						
	Boring Terminated at 59 Feet						

Stratification lines are approximate. In-situ, the transition may be gradual.

Hammer Type: Automatic

Advancement Method:
3.25" hollow stem auger to bedrock. Bedrock cored with NX diamond core barrel.

Abandonment Method:
Boring backfilled with bentonite grout upon completion

See Exploration and Testing Procedures for a description of field and laboratory procedures used and additional data (If any).

See Supporting Information for explanation of symbols and abbreviations.

Elevations estimated from a site topographic survey.

Notes:

WATER LEVEL OBSERVATIONS

▽ *7' while drilling*

Terracon
650 W Lake St, Ste 420
Chicago, IL

Boring Started: 10-08-2018 | Boring Completed: 10-08-2018

Drill Rig: D-120 | Driller: GEOCON/Robert

Project No.: MR175403

THIS BORING LOG IS NOT VALID IF SEPARATED FROM ORIGINAL REPORT. GEO SMART LOG-NO WELL MR175403 GREEN ERA BIOTECH.GPJ TERRACON_DATATEMPLATE.GDT 10/19/18

Rock Core Photograph – Boring B-19 – Run #1
Green Era Biotechnology Plant ■ Chicago, Illinois
October 22, 2018 ■ Terracon Pro ect No. MR175403R1

Terracon

Compressive Strength and Elastic Moduli of Intact Rock Core Specimens under Varying Stress and Temperatures
ASTM D 7012
Method C

Laboratory Services Group *192 Exchange Boulevard* *Glendale Heights, Illinois 60139* *Phone: (630) 717-4263*

Pro ect No.:	MR175403	Tested By:	BCM	Date:	10/18/18
Pro ect Name:	Green Era Biotechnology Plant	Calculated By:	BCM	Date:	10/18/18
Boring No.	B-19 Sample: Core	Chec ed By:	WP	Date:	10/18/18
Depth (ft):	50.0'-51.0'				
Description:	Light Gray Roc Core				

Roc Sample Moisture Condition at Test: [X] As Received [ ] See Remar s [ ] Saturated [ ] Oven Dry

TOLERANCE CHECK

Side Straightness		Ma umum Gap _ 0.020 in					Tolerance Met	PASS
End Flatness: Ma .	Diameter 1a	0.0020	in	Diameter 1b	0.0017	in _ 0.002 in	Tolerance Met	PASS
End Flatness: Ma .	Diameter 2a	0.0016	in	Diameter 2b	0.0014	in _ 0.002 in	Tolerance Met	PASS
Perpendicularity Slope	Diameter 1a	0.0042		Diameter 1b	0.0039	_ 0.0043	Tolerance Met	PASS
Perpendicularity Slope	Diameter 2a	0.0037		Diameter 2b	0.0035	_ 0.0043	Tolerance Met	PASS

Length (mm): 1) 3.995 2) 3.994 3) 3.999 Avg. 3.996 in

Diameter (mm): 1) 1.947 2) 1.954 3) 1.949 Avg. 1.950 in

Uniaxial Compressive Strength: **13,155** psi Mass 537.85 grams

Load: **39,280** lbs Mass 1.186 lb

L/D: **2.0** **Unit Weight:** **171.7** pcf

YOUNG'S MODULUS

E_t (50 Co) -

POISSON'S RATIO

u_t (50 Co) -

REMARKS:

Before

After

BORING LOG NO. B-20

PROJECT: Green Era Biotechnology Plant

CLIENT: Green Era Educational NFP
Chicago, Illinois

SITE: 650 W. 83rd St.
Chicago, Illinois

LOCATION See Exploration Plan

Latitude: 41.7449° Longitude: -87.6411°

Approximate Surface Elev: 16 (Ft.) +/-

DEPTH	ELEVATION (Ft.)	Description
0.3	15.5+/-	**GRAVEL SURFACE**, 3 inches
		FILL - SILTY CLAY, trace brick and gravel, dark gray and brown
3.0	13+/-	
		POSSIBE FILL - SILTY SAND (SM), trace gravel, dark brown to gray, moist, medium dense
6.0	10+/-	
		SILTY SAND (SM), trace clay and gravel, dark brown to gray, wet, loose
10.0	6+/-	
		LEAN CLAY (CL), trace sand and gravel, gray, medium stiff
22.0	-6+/-	
		SILTY LEAN CLAY (CL), trace sand and gravel, gray, very stiff to hard

DEPTH (Ft.)	WATER LEVEL OBSERVATIONS	SAMPLE TYPE	RECOVERY (In.)	FIELD TEST RESULTS	SAMPLE NUMBER	LABORATORY HP (tsf)	UNCONFINED COMPRESSIVE STRENGTH (tsf)	WATER CONTENT (%)	DRY UNIT WEIGHT (pcf)
		X	14	5-6-6 N=12	1	2.00 (HP)		16	
		X	15	4-6-4 N=10	2			18	
5									
	▽	X	10	3-2-2 N=4	3			29	
		X	5	1-1-1 N=2	4			21	
10									
		X	18	1-2-3 N=5	5	0.75 (HP)		24	
		X	18	2-2-2 N=4	6	0.75 (HP)		24	
15									
	▽								
		X	18	2-2-2 N=4	7	0.75 (HP)		22	
20									
		X	18	5-7-9 N=16	8	6.00 (HP)		13	
25									
		X	18	5-7-8 N=15	9	4.50 (HP)		15	
30									

Stratification lines are approximate. In-situ, the transition may be gradual.

Hammer Type: Automatic

Advancement Method:
3.25" hollow stem auger to bedrock

Abandonment Method:
Boring backfilled with Auger Cuttings and/or Bentonite

See Exploration and Testing Procedures for a description of field and laboratory procedures used and additional data (If any).

See Supporting Information for explanation of symbols and abbreviations.

Elevations estimated from a site topographic survey.

Notes:

WATER LEVEL OBSERVATIONS

▽ *7' while drilling*

▽ *17' upon completion*

Terracon
650 W Lake St, Ste 420
Chicago, IL

Boring Started: 10-03-2018 | Boring Completed: 10-03-2018

Drill Rig: D-120 | Driller: GEOCON/Robert

Project No.: MR175403

THIS BORING LOG IS NOT VALID IF SEPARATED FROM ORIGINAL REPORT. GEO SMART LOG-NO WELL MR175403 GREEN ERA BIOTECH.GPJ TERRACON_DATATEMPLATE.GDT 10/19/18

BORING LOG NO. B-20

PROJECT: Green Era Biotechnology Plant

CLIENT: Green Era Educational NFP
Chicago, Illinois

SITE: 650 W. 83rd St.
Chicago, Illinois

LOCATION See Exploration Plan

Latitude: 41.7449° Longitude: -87.6411°

Approximate Surface Elev: 16 (Ft.) +/-

DEPTH	ELEVATION (Ft.)	DEPTH (Ft.)	RECOVERY (In.)	FIELD TEST RESULTS	SAMPLE NUMBER	LABORATORY HP (tsf)	WATER CONTENT (%)
SILTY LEAN CLAY (CL), trace sand and gravel, gray, very stiff to hard *(continued)*							
		35	18	4-6-8 N=14	10	3.50 (HP)	16
		40	18	4-5-8 N=13	11	4.00 (HP)	15
42.0	-26+/-						
SILT (ML), trace clay and gravel, gray, moist, very dense		45	18	23-40-47 N=87	12		10
48.0	-32+/-						
48.5 **APPARENT BEDROCK**	-32.5+/-		6	57-50/2"	13		5
Boring Terminated at 48.5 Feet							

Stratification lines are approximate. In-situ, the transition may be gradual.

Hammer Type: Automatic

Advancement Method:
3.25" hollow stem auger to bedrock

Abandonment Method:
Boring backfilled with Auger Cuttings and/or Bentonite

See Exploration and Testing Procedures for a description of field and laboratory procedures used and additional data (If any).

See Supporting Information for explanation of symbols and abbreviations.

Elevations estimated from a site topographic survey.

Notes:

WATER LEVEL OBSERVATIONS

7' while drilling

17' upon completion

Terracon
650 W Lake St, Ste 420
Chicago, IL

Boring Started: 10-03-2018 | Boring Completed: 10-03-2018

Drill Rig: D-120 | Driller: GEOCON/Robert

Project No.: MR175403

THIS BORING LOG IS NOT VALID IF SEPARATED FROM ORIGINAL REPORT. GEO SMART LOG-NO WELL MR175403 GREEN ERA BIOTECH.GPJ TERRACON_DATATEMPLATE.GDT 10/19/18

CONSOLIDATION TEST RESULTS

ONE DIMENSIONAL CONSOLIDATION PROPERTIES OF SOILS
USING INCREMENTAL LOADING
ASTM D2435

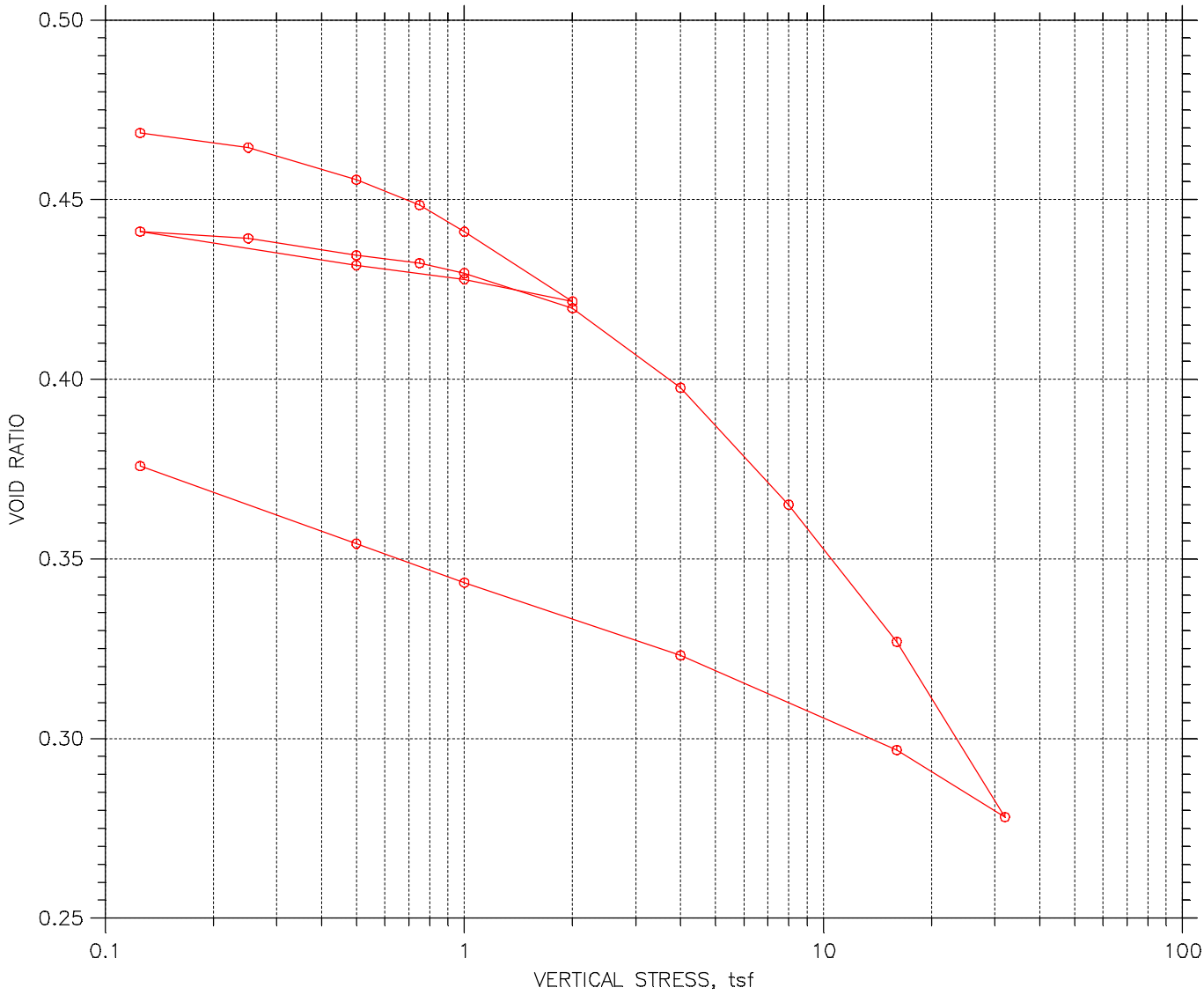

				Before Test	After Test
Overburden Pressure: 1.2 tsf			Water Content, %	15.32	13.76
Preconsolidation Pressure: 2.1 tsf			Dry Unit Weight, pcf	115.1	123.4
Compression Index: 0.11			Saturation, %	87.73	99.62
Diameter: 2.503 in		Height: 0.7524 in	Void Ratio	0.47	0.38
LL: 27	PL: 15	PI: 12	GS: 2.72		

Terracon
Consulting Engineers & Scientists

Project: GREEN ERA BIOTECH PT	Location: CHICAGO, IL	Project No.: MR175403
Boring No.: B-1 18-20	Tested By: BCM	Checked By: WPQ
Sample No.: S-7	Test Date: 11/30/17	Depth: 18.0'-20.0'
Test No.: B11820CON	Sample Type: 3.0" ST	Elevation: ----
Description: DARK GRAY LEAN CLAY WITH SAND TRACE GRAVEL CL 1.5" GRAVEL NOTED		
Remarks: Pc = 2.1 tsf Cc = 0.110 Ccr = 0.010 TEST PERFORMED AS PER ASTM D2435		

ONE DIMENSIONAL CONSOLIDATION PROPERTIES OF SOILS
USING INCREMENTAL LOADING
ASTM D2435

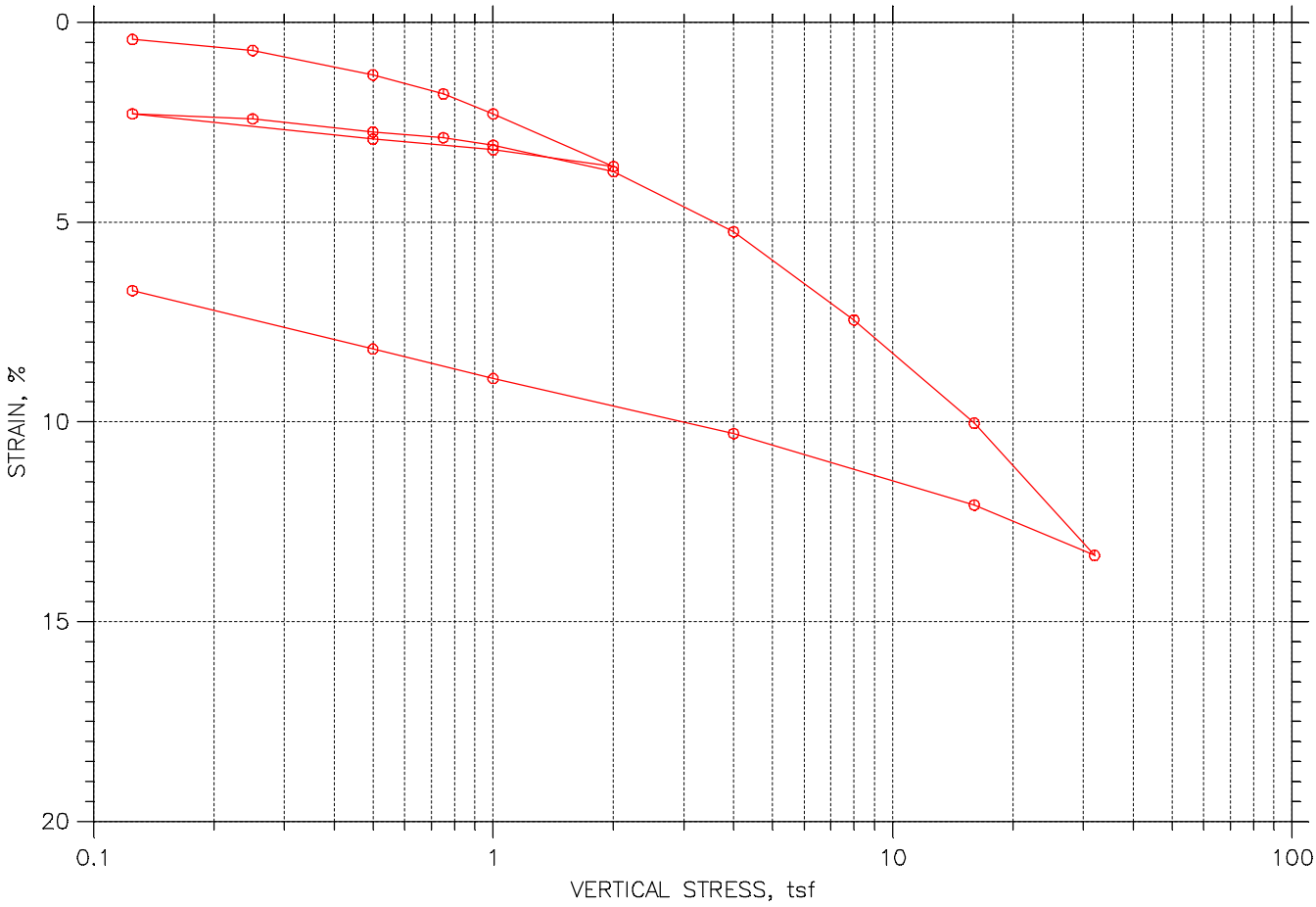

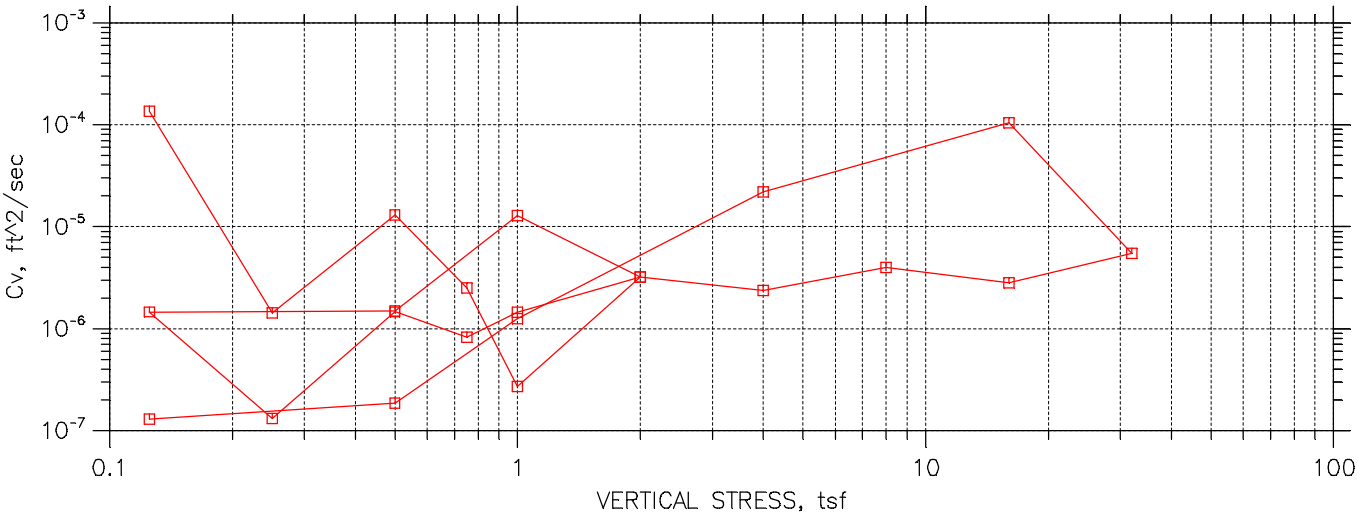

Terracon Consulting Engineers & Scientists	Project: GREEN ERA BIOTECH PT	Location: CHICAGO, IL	Project No.: MR175403
	Boring No.: B-1 18-20	Tested By: BCM	Checked By: WPQ
	Sample No.: S-7	Test Date: 11/30/17	Depth: 18.0'-20.0'
	Test No.: B11820CON	Sample Type: 3.0" ST	Elevation: ----
	Description: DARK GRAY LEAN CLAY WITH SAND TRACE GRAVEL CL 1.5" GRAVEL NOTED		
	Remarks: Pc = 2.1 tsf Cc = 0.110 Ccr = 0.010 TEST PERFORMED AS PER ASTM D2435		

CONSOLIDATION TEST DATA

TIME CURVES

Constant Load Step: 1 of 23

Stress: 0.125 tsf

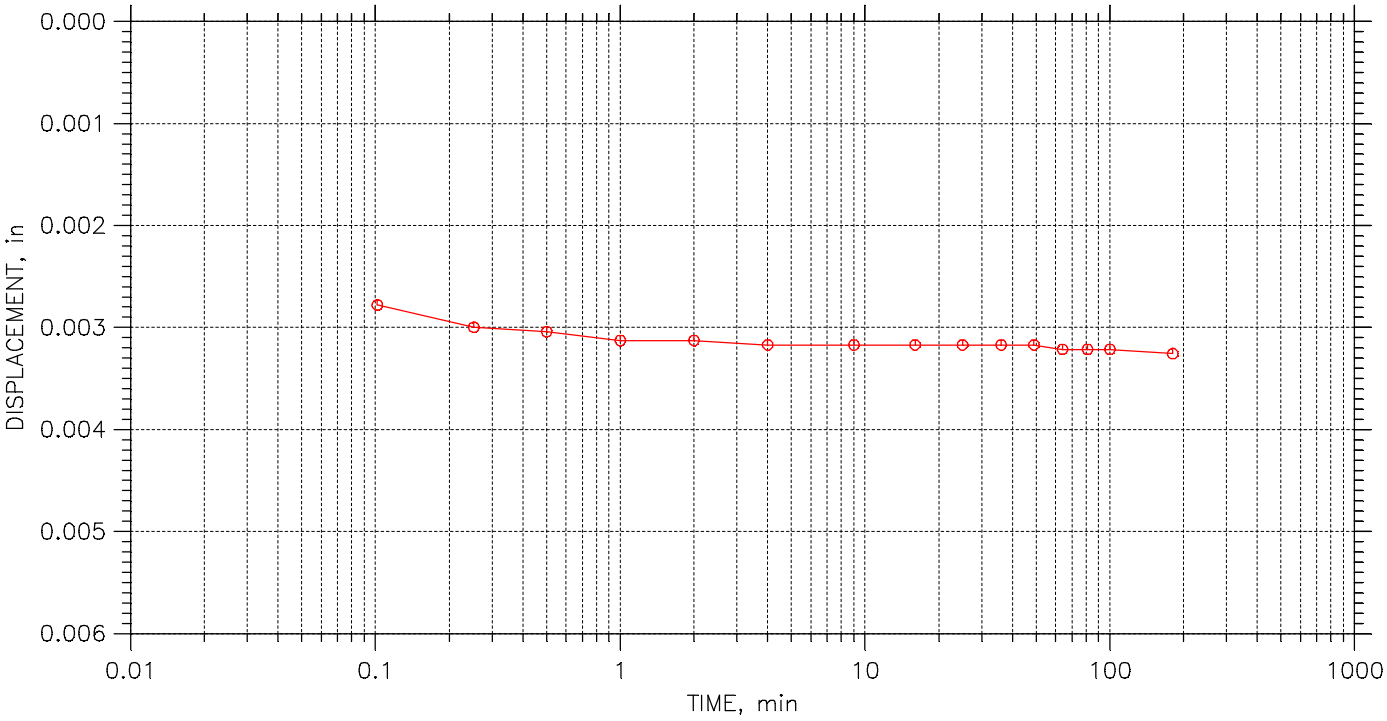

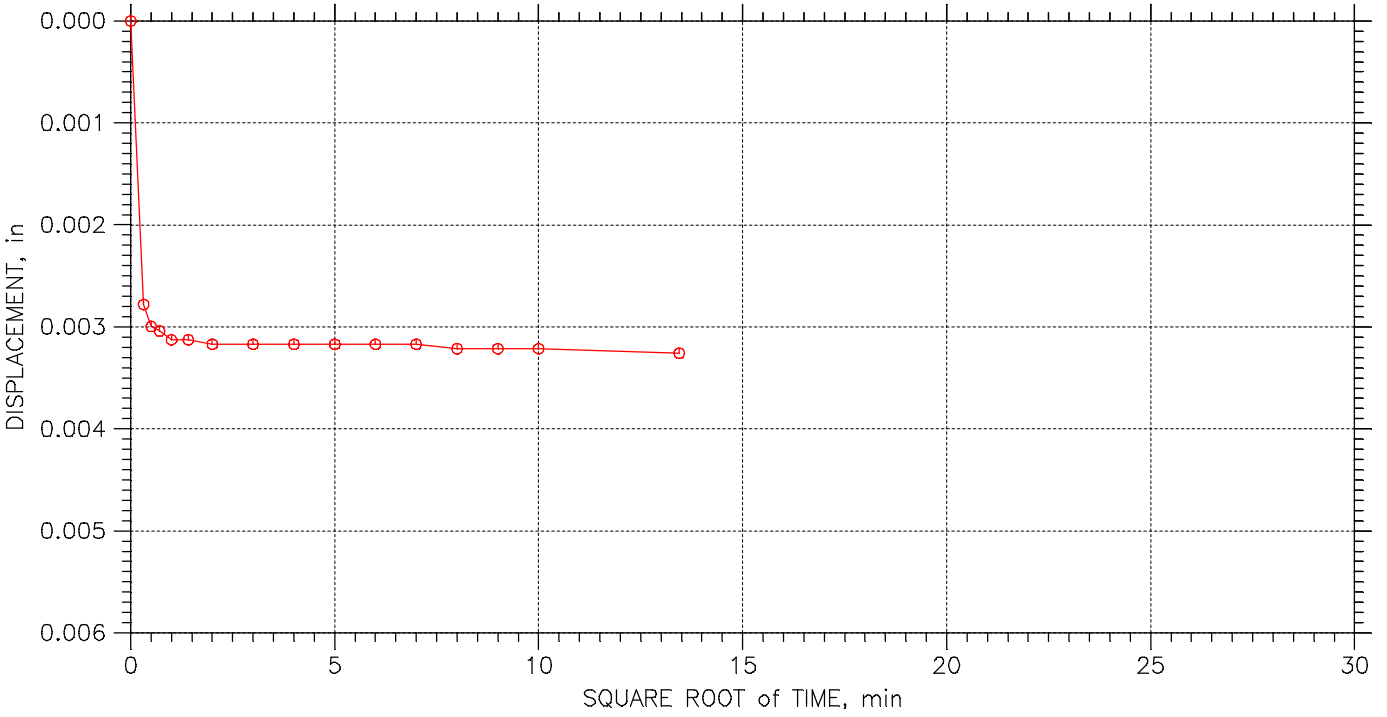

Terracon Consulting Engineers & Scientists	Project: GREEN ERA BIOTECH PT	Location: CHICAGO, IL	Project No.: MR175403
	Boring No.: B-1 18-20	Tested By: BCM	Checked By: WPQ
	Sample No.: S-7	Test Date: 11/30/17	Depth: 18.0'-20.0'
	Test No.: B11820CON	Sample Type: 3.0" ST	Elevation: ----
	Description: DARK GRAY LEAN CLAY WITH SAND TRACE GRAVEL CL 1.5" GRAVEL NOTED		
	Remarks: Pc = 2.1 tsf Cc = 0.110 Ccr = 0.010 TEST PERFORMED AS PER ASTM D2435		

CONSOLIDATION TEST DATA

TIME CURVES

Constant Load Step: 2 of 23

Stress: 0.25 tsf

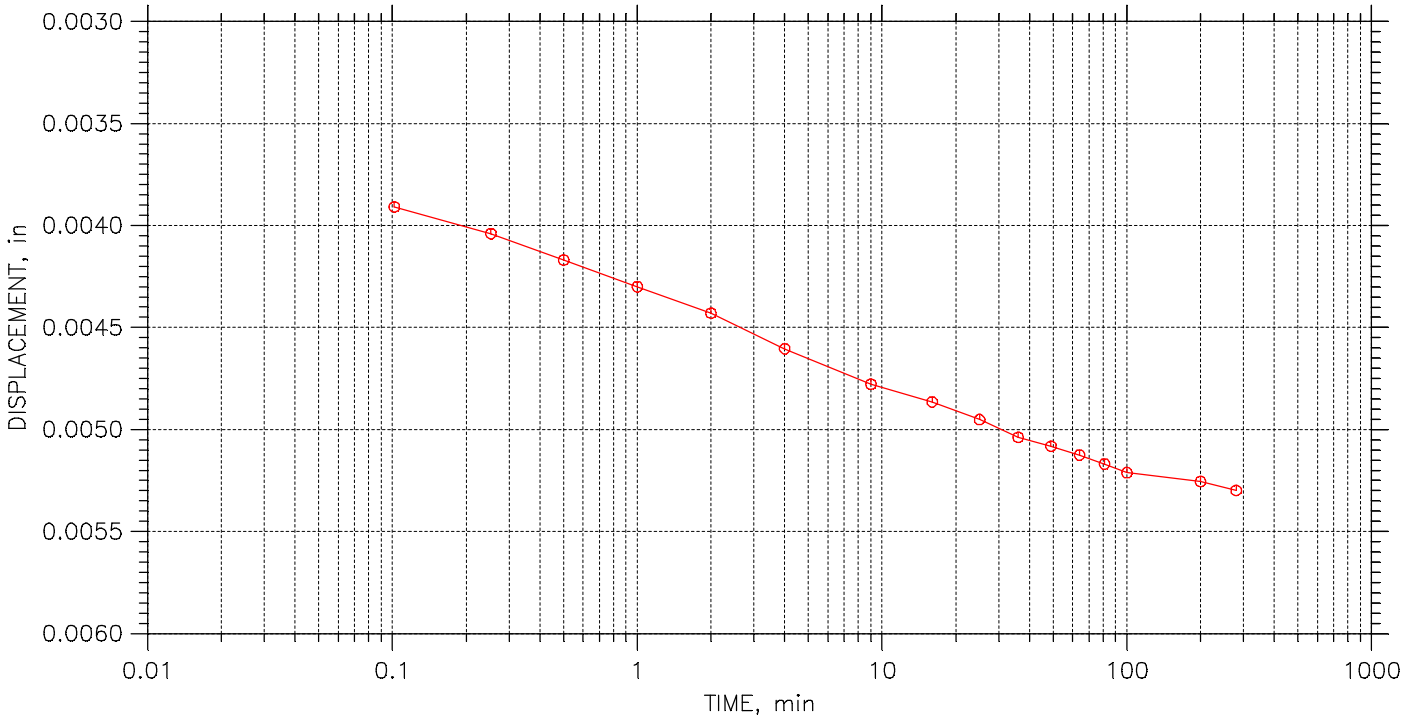

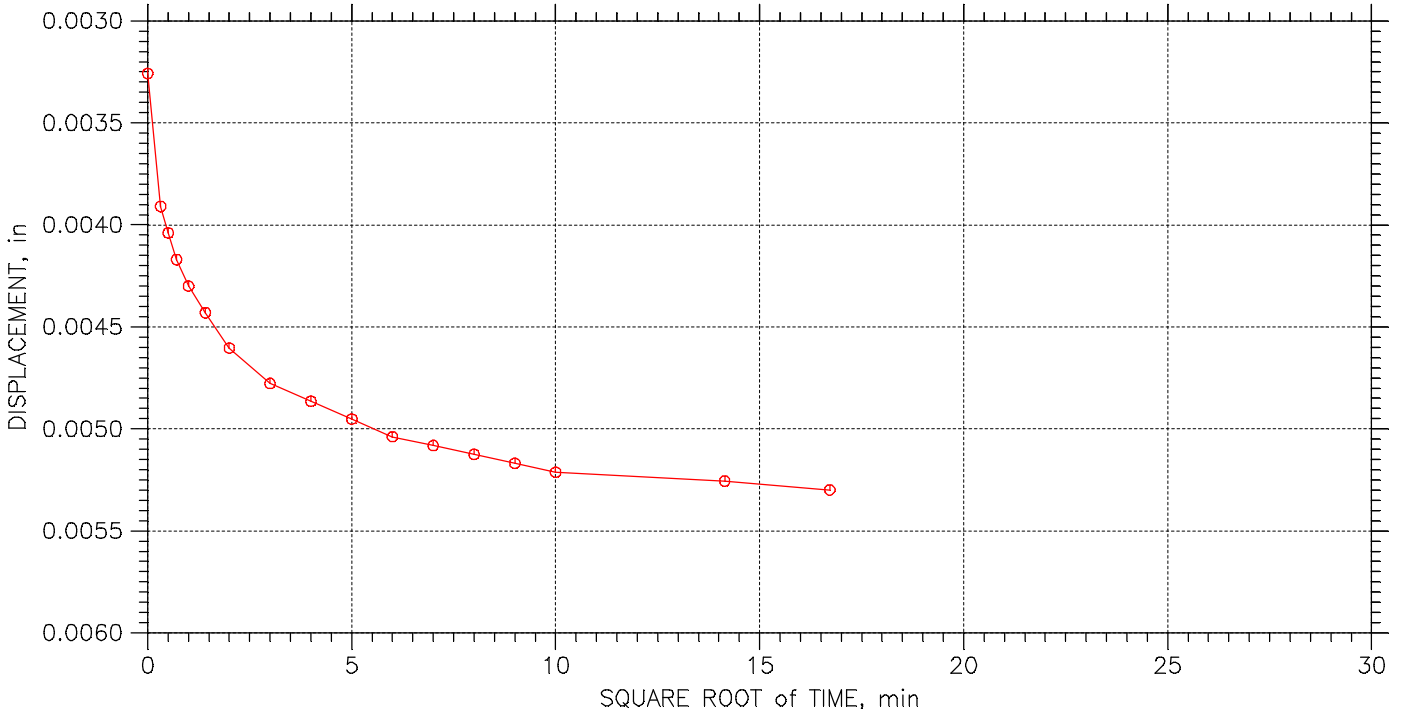

Terracon Consulting Engineers & Scientists	Project: GREEN ERA BIOTECH PT	Location: CHICAGO, IL	Project No.: MR175403
	Boring No.: B-1 18-20	Tested By: BCM	Checked By: WPQ
	Sample No.: S-7	Test Date: 11/30/17	Depth: 18.0'-20.0'
	Test No.: B11820CON	Sample Type: 3.0" ST	Elevation: ----
	Description: DARK GRAY LEAN CLAY WITH SAND TRACE GRAVEL CL 1.5" GRAVEL NOTED		
	Remarks: Pc = 2.1 tsf Cc = 0.110 Ccr = 0.010 TEST PERFORMED AS PER ASTM D2435		

CONSOLIDATION TEST DATA

TIME CURVES

Constant Load Step: 3 of 23

Stress: 0.5 tsf

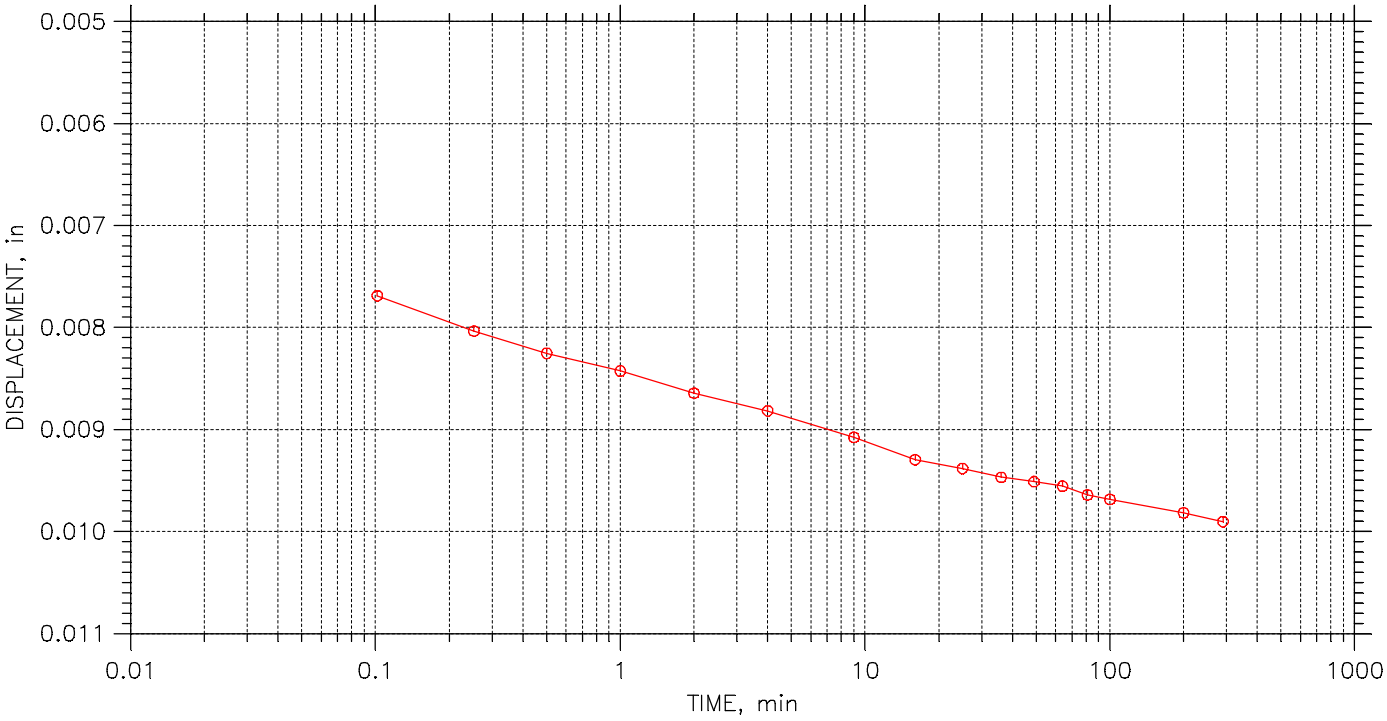

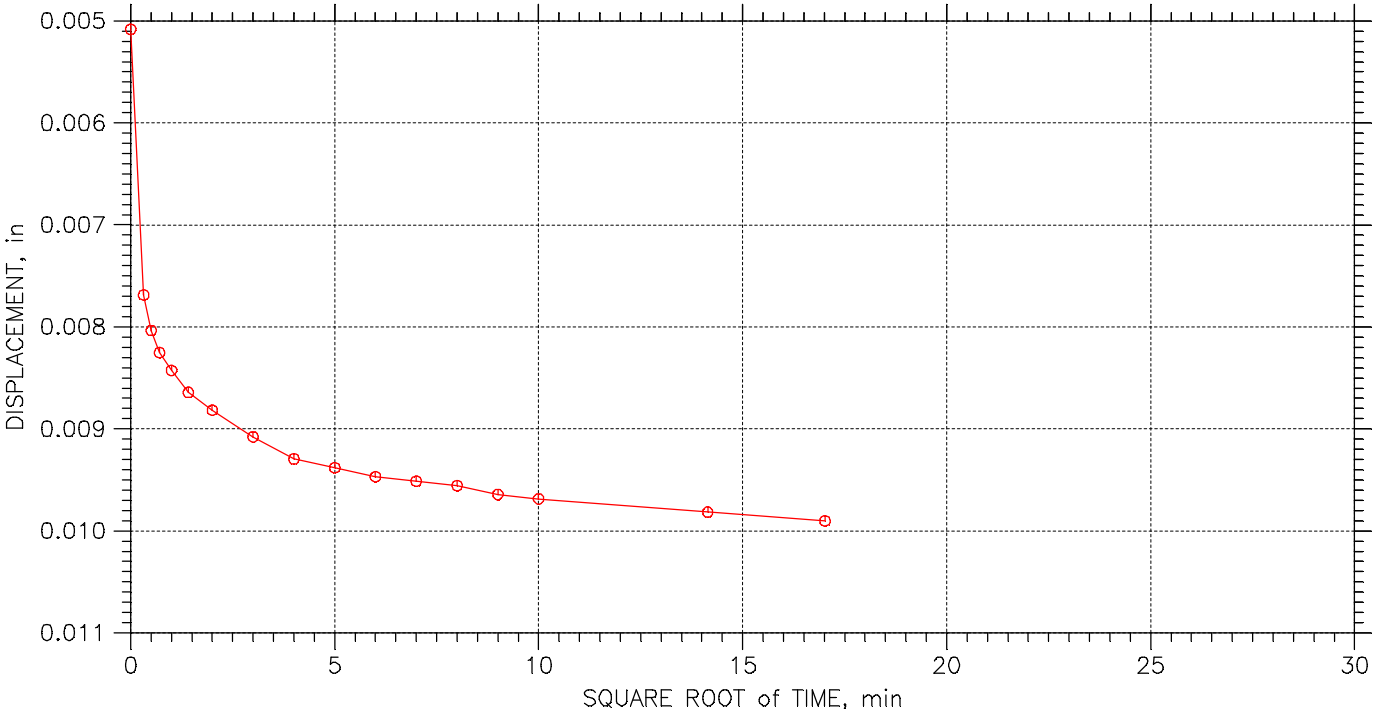

Terracon Consulting Engineers & Scientists	Project: GREEN ERA BIOTECH PT	Location: CHICAGO, IL	Project No.: MR175403
	Boring No.: B-1 18-20	Tested By: BCM	Checked By: WPQ
	Sample No.: S-7	Test Date: 11/30/17	Depth: 18.0'-20.0'
	Test No.: B11820CON	Sample Type: 3.0" ST	Elevation: ----
	Description: DARK GRAY LEAN CLAY WITH SAND TRACE GRAVEL CL 1.5" GRAVEL NOTED		
	Remarks: Pc = 2.1 tsf Cc = 0.110 Ccr = 0.010 TEST PERFORMED AS PER ASTM D2435		

CONSOLIDATION TEST DATA

TIME CURVES

Constant Load Step: 4 of 23

Stress: 0.75 tsf

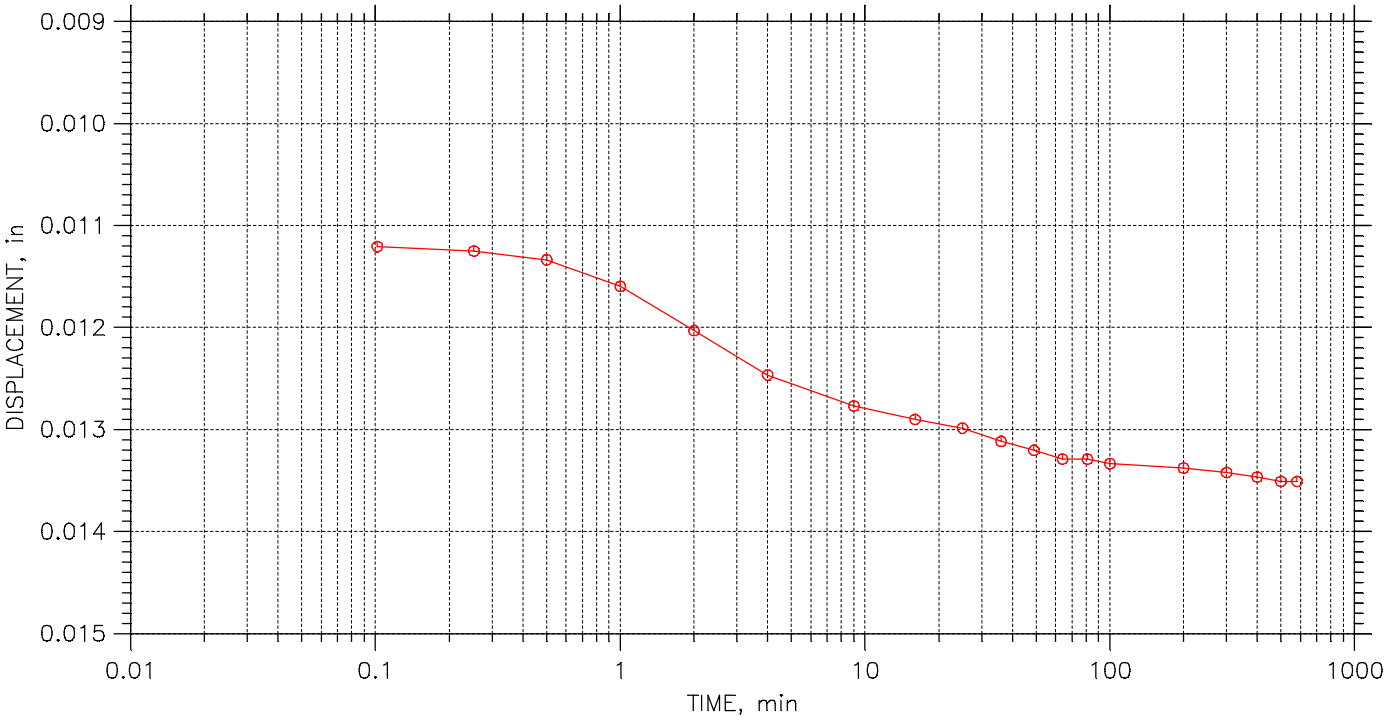

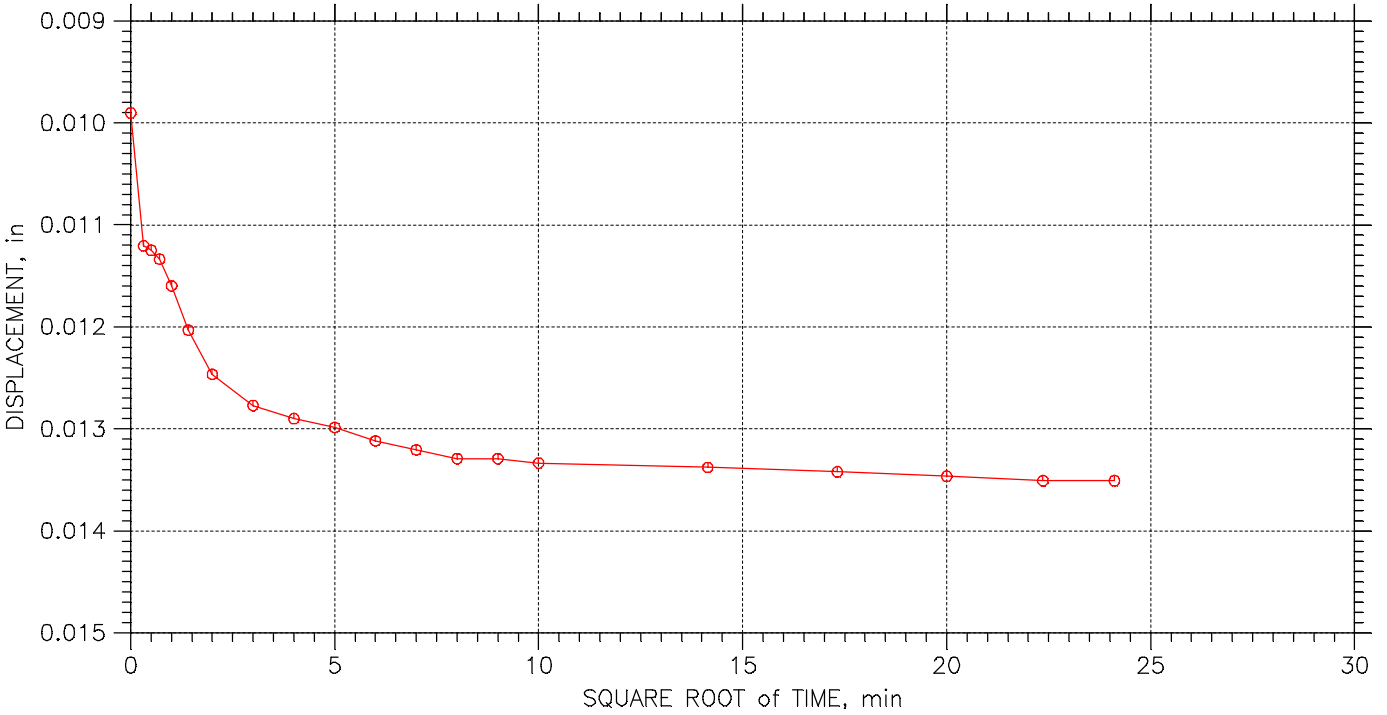

Terracon Consulting Engineers & Scientists	Project: GREEN ERA BIOTECH PT	Location: CHICAGO, IL	Project No.: MR175403
	Boring No.: B-1 18-20	Tested By: BCM	Checked By: WPQ
	Sample No.: S-7	Test Date: 11/30/17	Depth: 18.0'-20.0'
	Test No.: B11820CON	Sample Type: 3.0" ST	Elevation: ----
	Description: DARK GRAY LEAN CLAY WITH SAND TRACE GRAVEL CL 1.5" GRAVEL NOTED		
	Remarks: Pc = 2.1 tsf Cc = 0.110 Ccr = 0.010 TEST PERFORMED AS PER ASTM D2435		

CONSOLIDATION TEST DATA

TIME CURVES

Constant Load Step: 5 of 23

Stress: 1. tsf

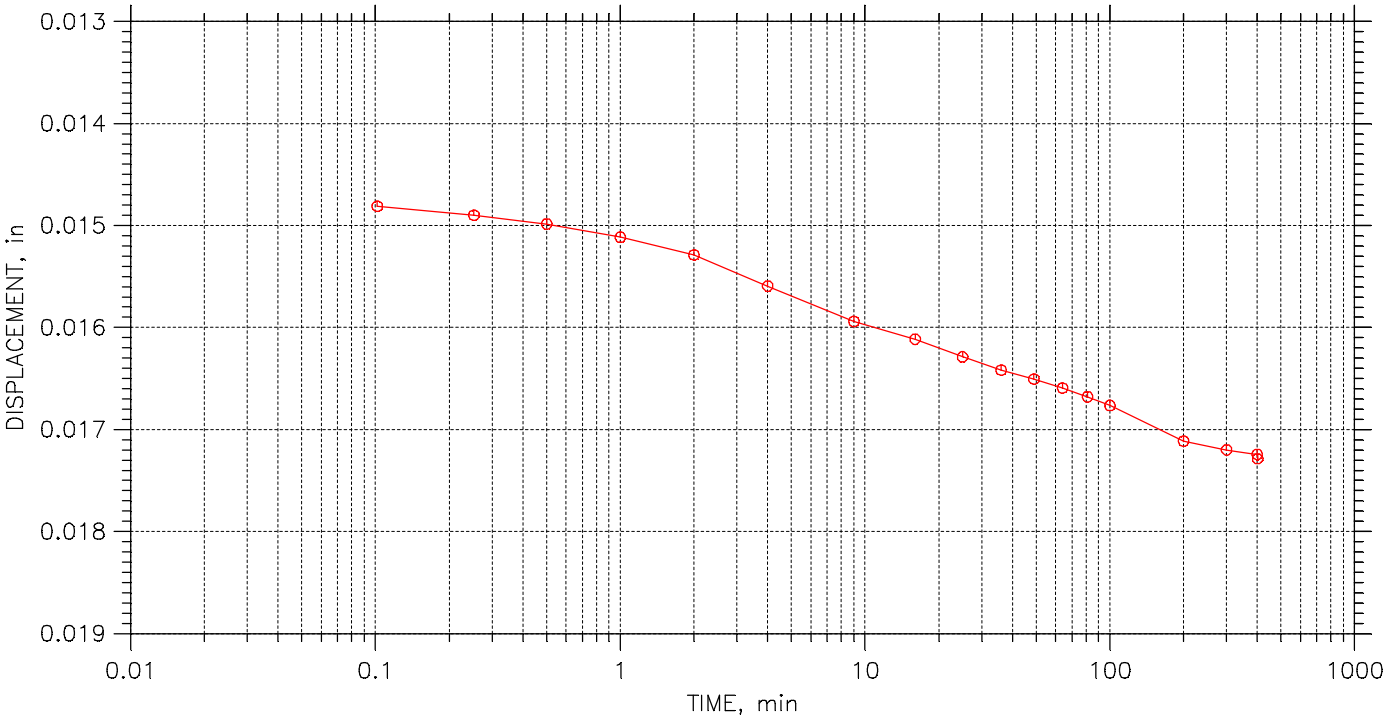

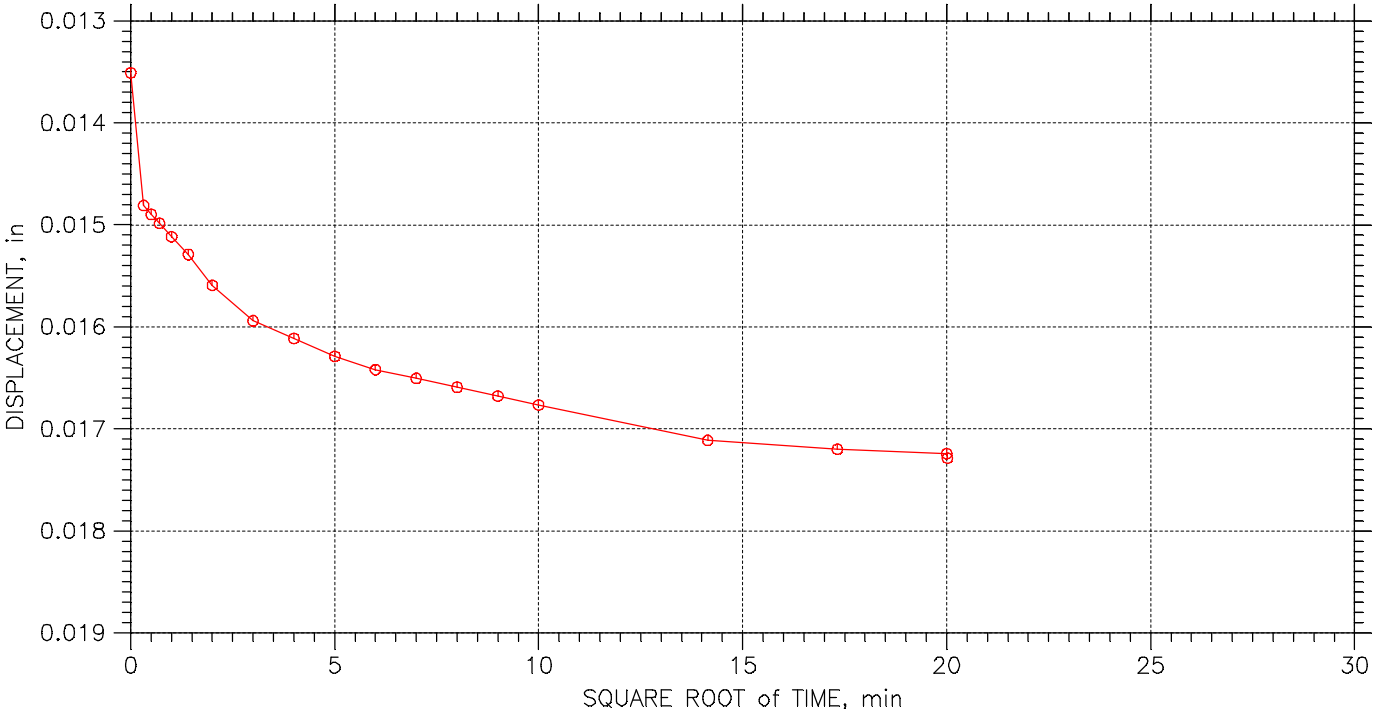

Terracon Consulting Engineers & Scientists	Project: GREEN ERA BIOTECH PT	Location: CHICAGO, IL	Project No.: MR175403
	Boring No.: B-1 18-20	Tested By: BCM	Checked By: WPQ
	Sample No.: S-7	Test Date: 11/30/17	Depth: 18.0'-20.0'
	Test No.: B11820CON	Sample Type: 3.0" ST	Elevation: ----
	Description: DARK GRAY LEAN CLAY WITH SAND TRACE GRAVEL CL 1.5" GRAVEL NOTED		
	Remarks: Pc = 2.1 tsf Cc = 0.110 Ccr = 0.010 TEST PERFORMED AS PER ASTM D2435		

CONSOLIDATION TEST DATA

TIME CURVES

Constant Load Step: 6 of 23

Stress: 2. tsf

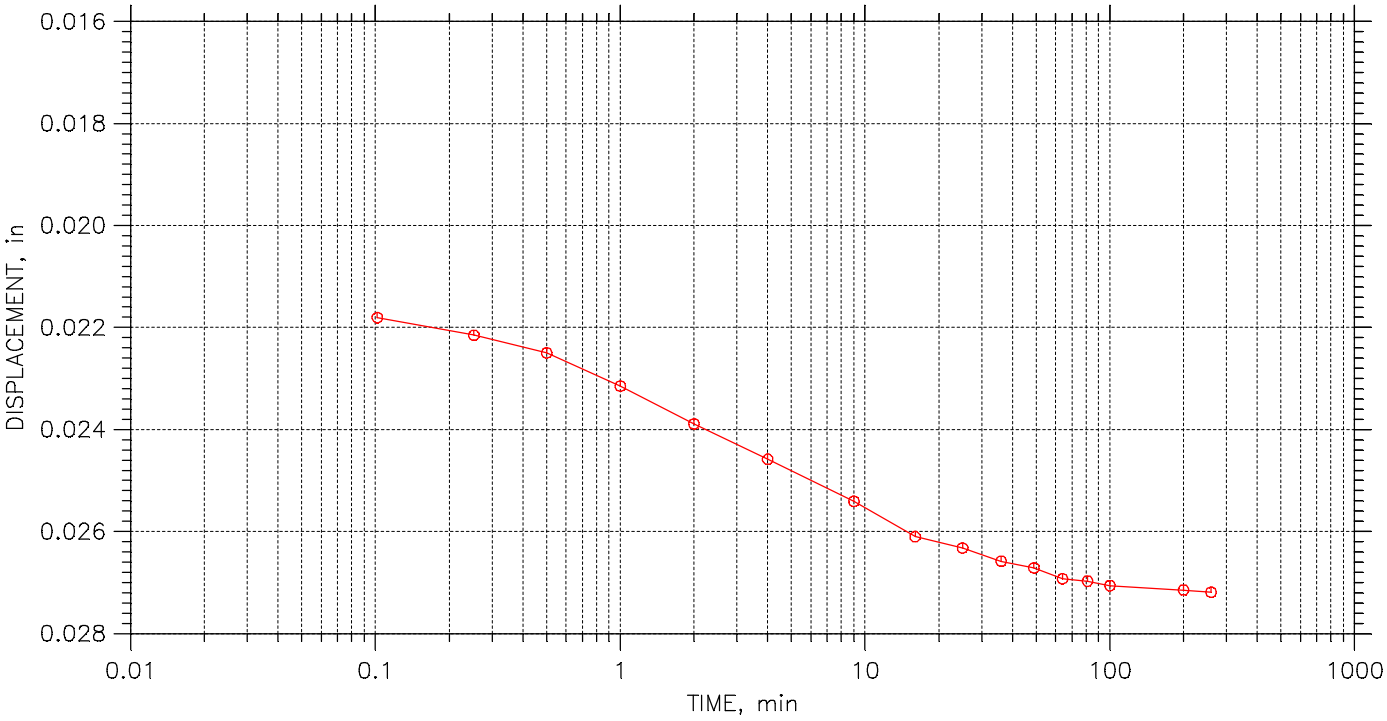

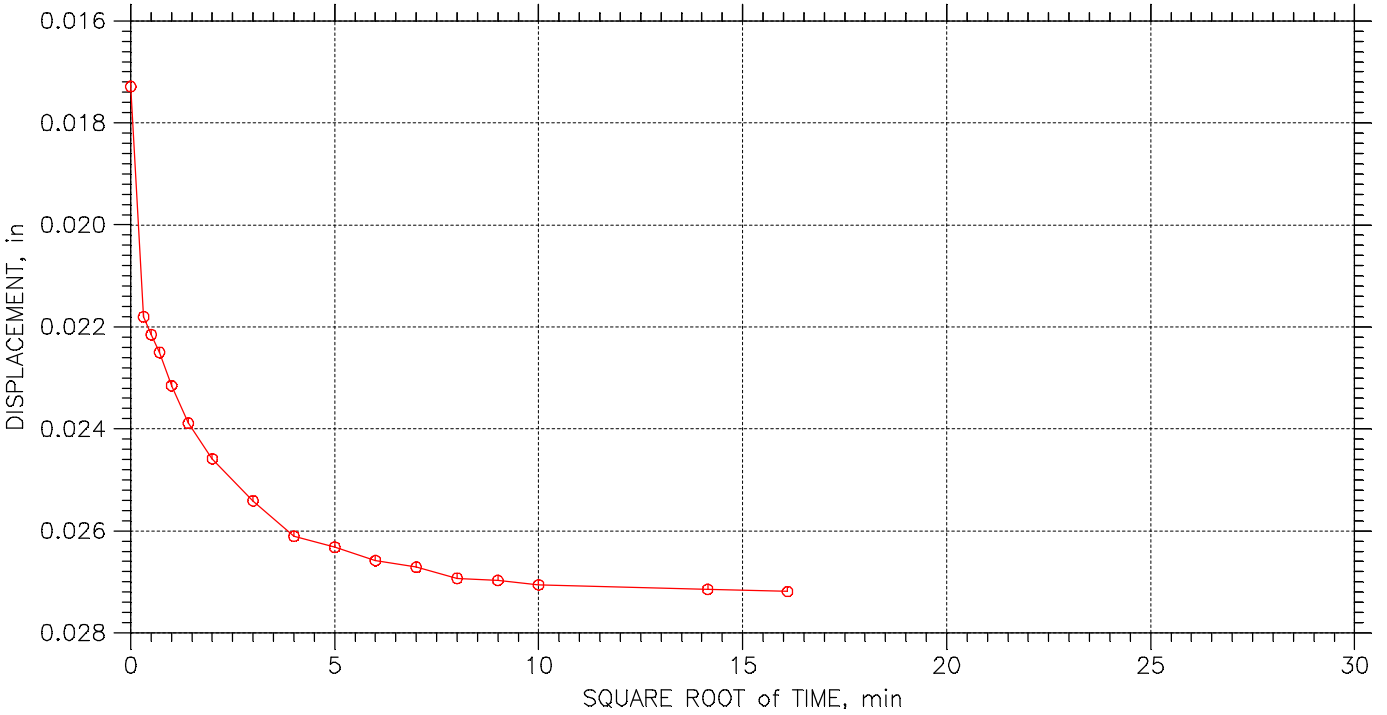

Terracon Consulting Engineers & Scientists	Project: GREEN ERA BIOTECH PT	Location: CHICAGO, IL	Project No.: MR175403
	Boring No.: B-1 18-20	Tested By: BCM	Checked By: WPQ
	Sample No.: S-7	Test Date: 11/30/17	Depth: 18.0'-20.0'
	Test No.: B11820CON	Sample Type: 3.0" ST	Elevation: ----
	Description: DARK GRAY LEAN CLAY WITH SAND TRACE GRAVEL CL 1.5" GRAVEL NOTED		
	Remarks: Pc = 2.1 tsf Cc = 0.110 Ccr = 0.010 TEST PERFORMED AS PER ASTM D2435		

CONSOLIDATION TEST DATA

TIME CURVES

Constant Load Step: 7 of 23

Stress: 1. tsf

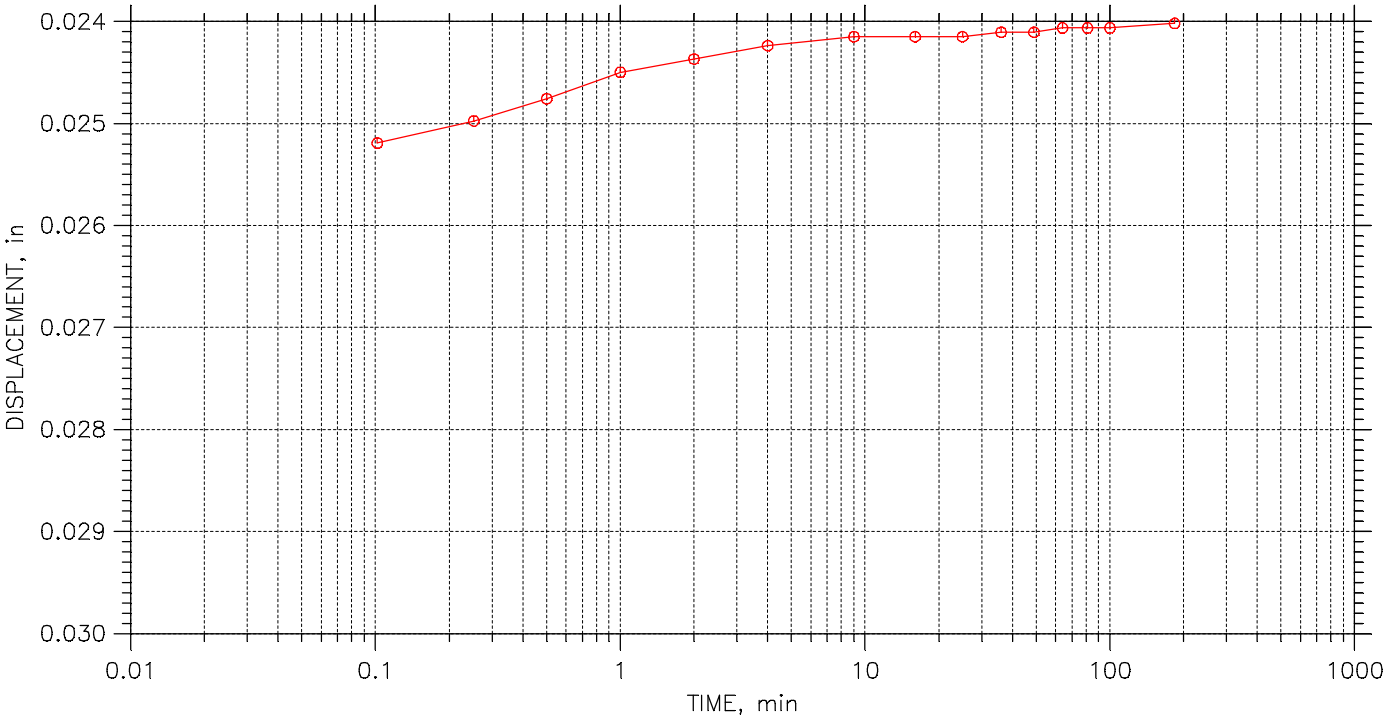

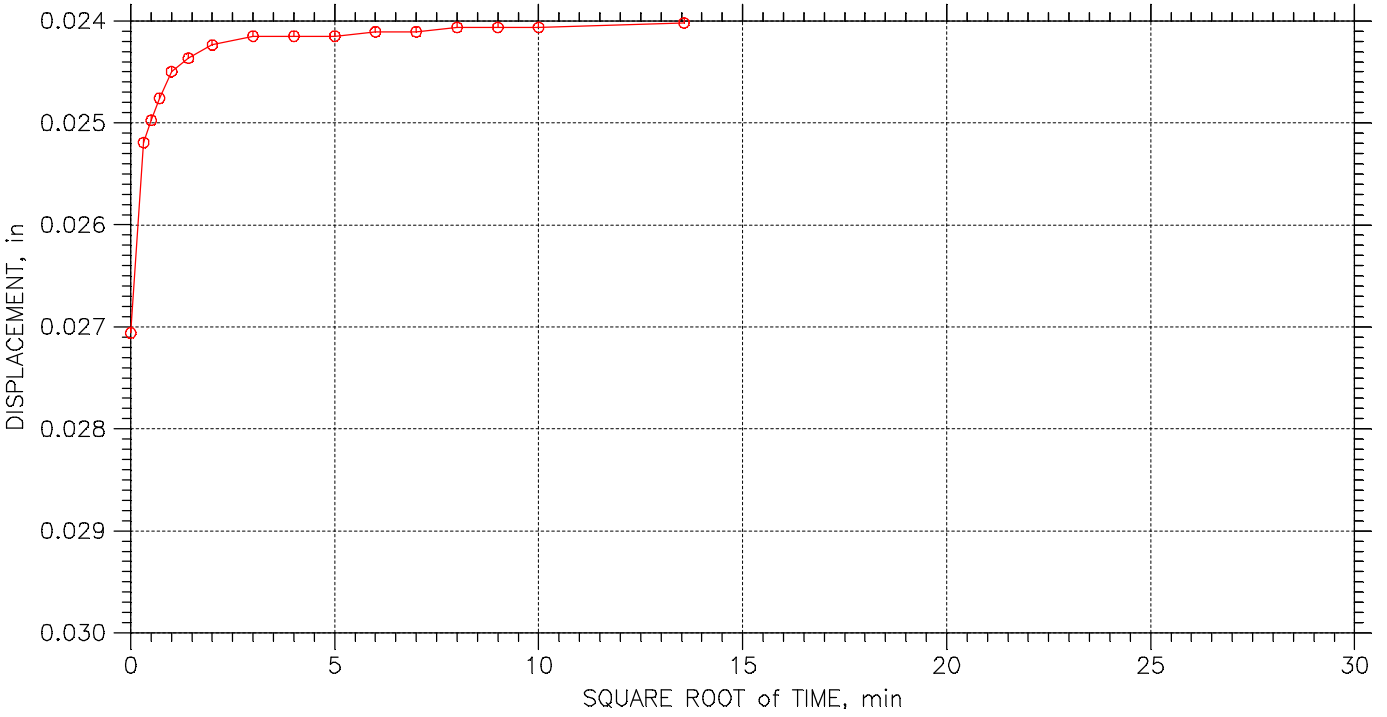

Terracon Consulting Engineers & Scientists	Project: GREEN ERA BIOTECH PT	Location: CHICAGO, IL	Project No.: MR175403
	Boring No.: B-1 18-20	Tested By: BCM	Checked By: WPQ
	Sample No.: S-7	Test Date: 11/30/17	Depth: 18.0'-20.0'
	Test No.: B11820CON	Sample Type: 3.0" ST	Elevation: ----
	Description: DARK GRAY LEAN CLAY WITH SAND TRACE GRAVEL CL 1.5" GRAVEL NOTED		
	Remarks: Pc = 2.1 tsf Cc = 0.110 Ccr = 0.010 TEST PERFORMED AS PER ASTM D2435		

CONSOLIDATION TEST DATA

TIME CURVES

Constant Load Step: 8 of 23

Stress: 0.5 tsf

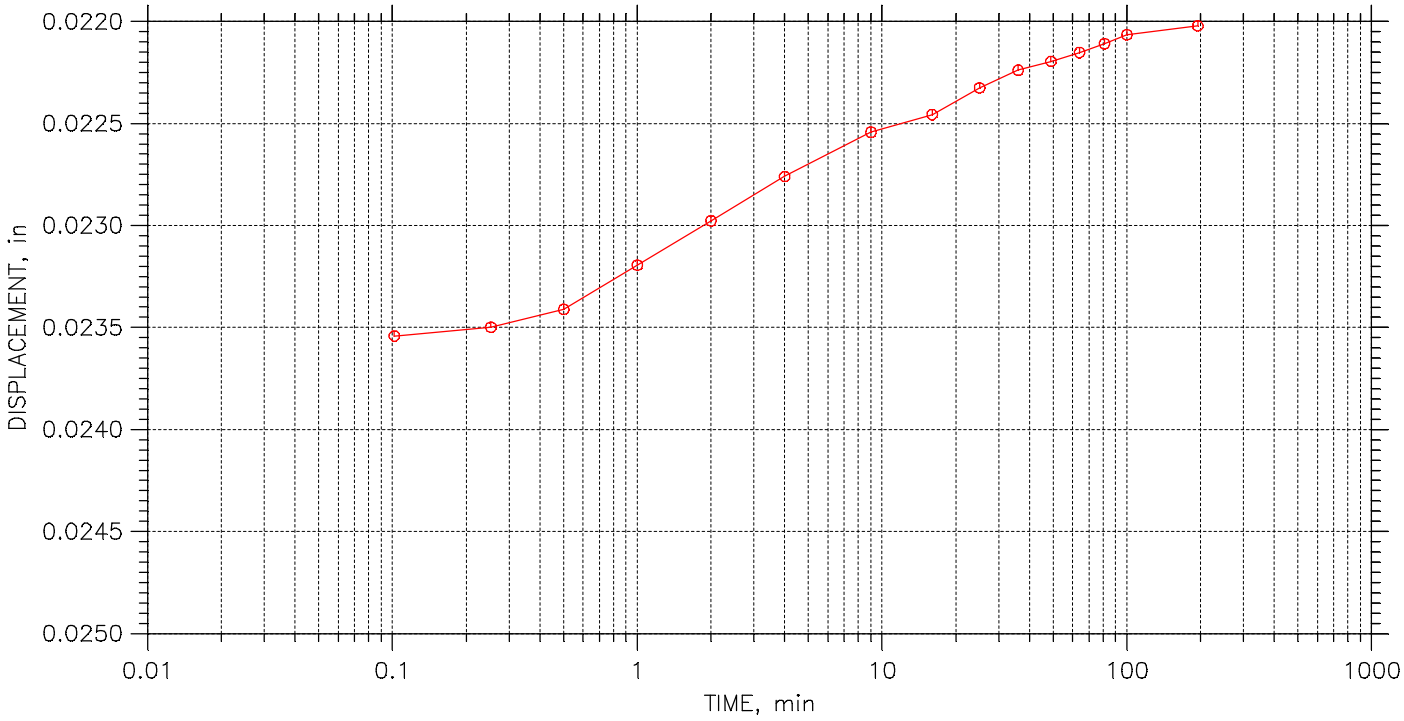

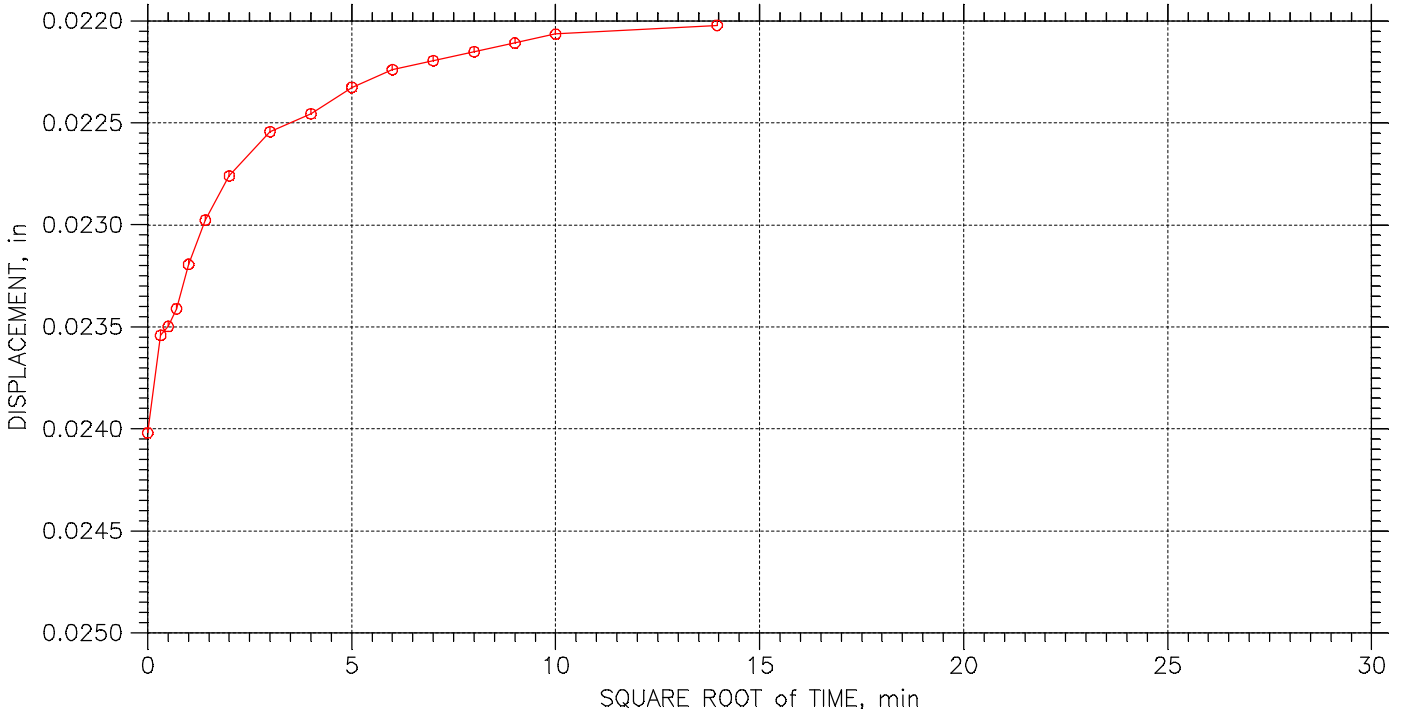

Terracon Consulting Engineers & Scientists	Project: GREEN ERA BIOTECH PT	Location: CHICAGO, IL	Project No.: MR175403
	Boring No.: B-1 18-20	Tested By: BCM	Checked By: WPQ
	Sample No.: S-7	Test Date: 11/30/17	Depth: 18.0'-20.0'
	Test No.: B11820CON	Sample Type: 3.0" ST	Elevation: ----
	Description: DARK GRAY LEAN CLAY WITH SAND TRACE GRAVEL CL 1.5" GRAVEL NOTED		
	Remarks: Pc = 2.1 tsf Cc = 0.110 Ccr = 0.010 TEST PERFORMED AS PER ASTM D2435		

CONSOLIDATION TEST DATA

TIME CURVES

Constant Load Step: 9 of 23

Stress: 0.125 tsf

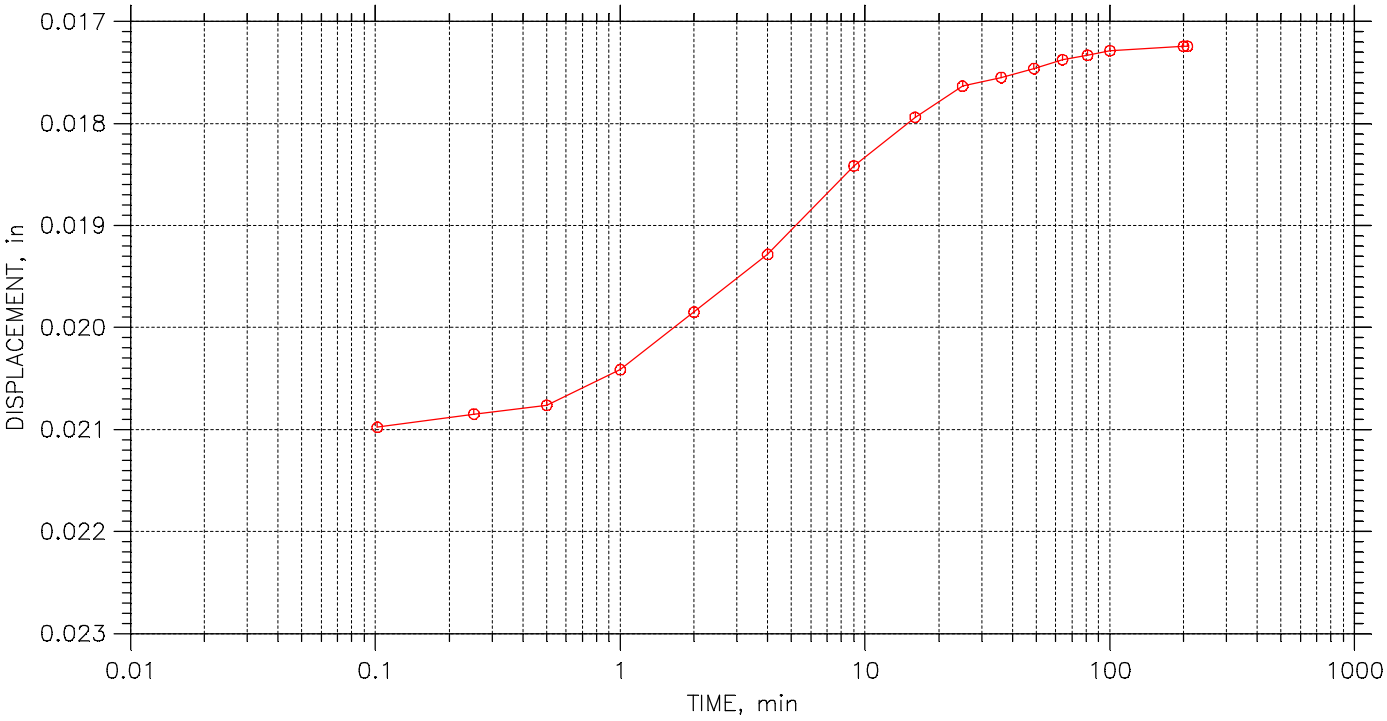

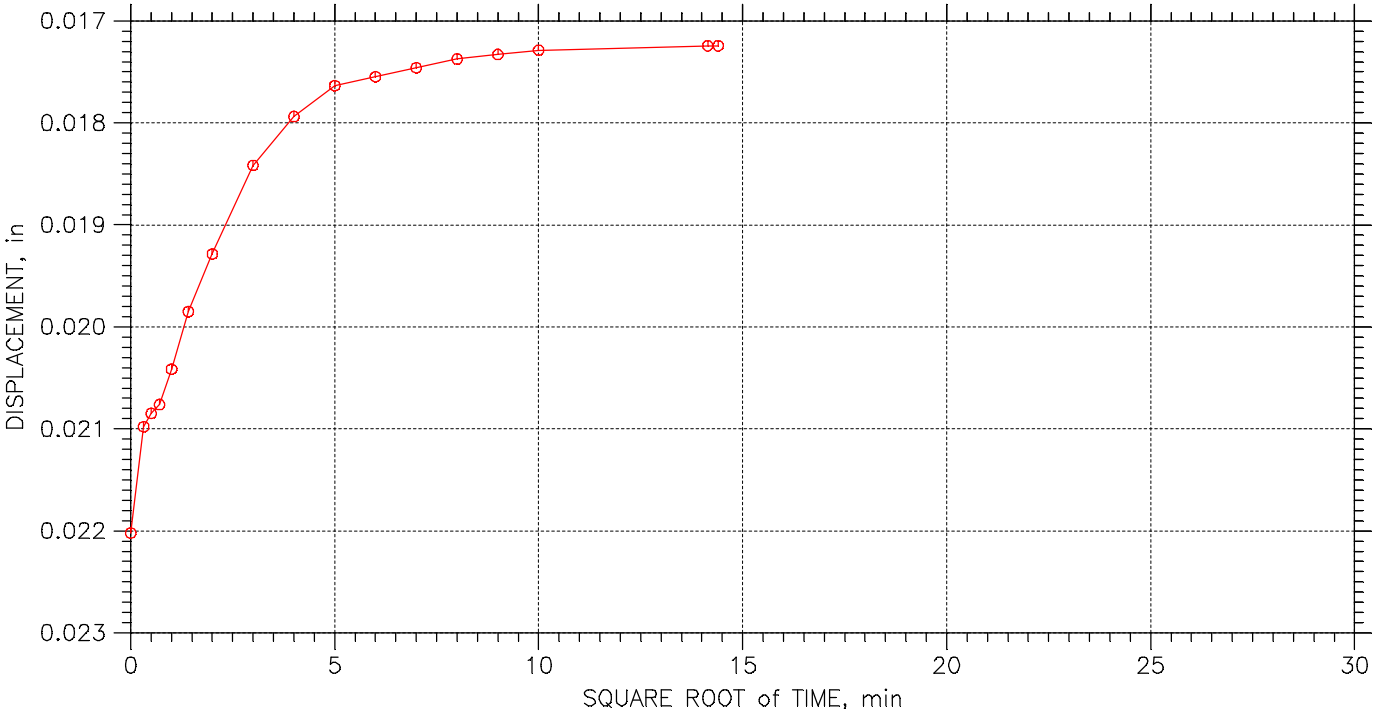

Terracon Consulting Engineers & Scientists	Project: GREEN ERA BIOTECH PT	Location: CHICAGO, IL	Project No.: MR175403
	Boring No.: B-1 18-20	Tested By: BCM	Checked By: WPQ
	Sample No.: S-7	Test Date: 11/30/17	Depth: 18.0'-20.0'
	Test No.: B11820CON	Sample Type: 3.0" ST	Elevation: ----
	Description: DARK GRAY LEAN CLAY WITH SAND TRACE GRAVEL CL 1.5" GRAVEL NOTED		
	Remarks: Pc = 2.1 tsf Cc = 0.110 Ccr = 0.010 TEST PERFORMED AS PER ASTM D2435		

CONSOLIDATION TEST DATA

TIME CURVES

Constant Load Step: 10 of 23

Stress: 0.25 tsf

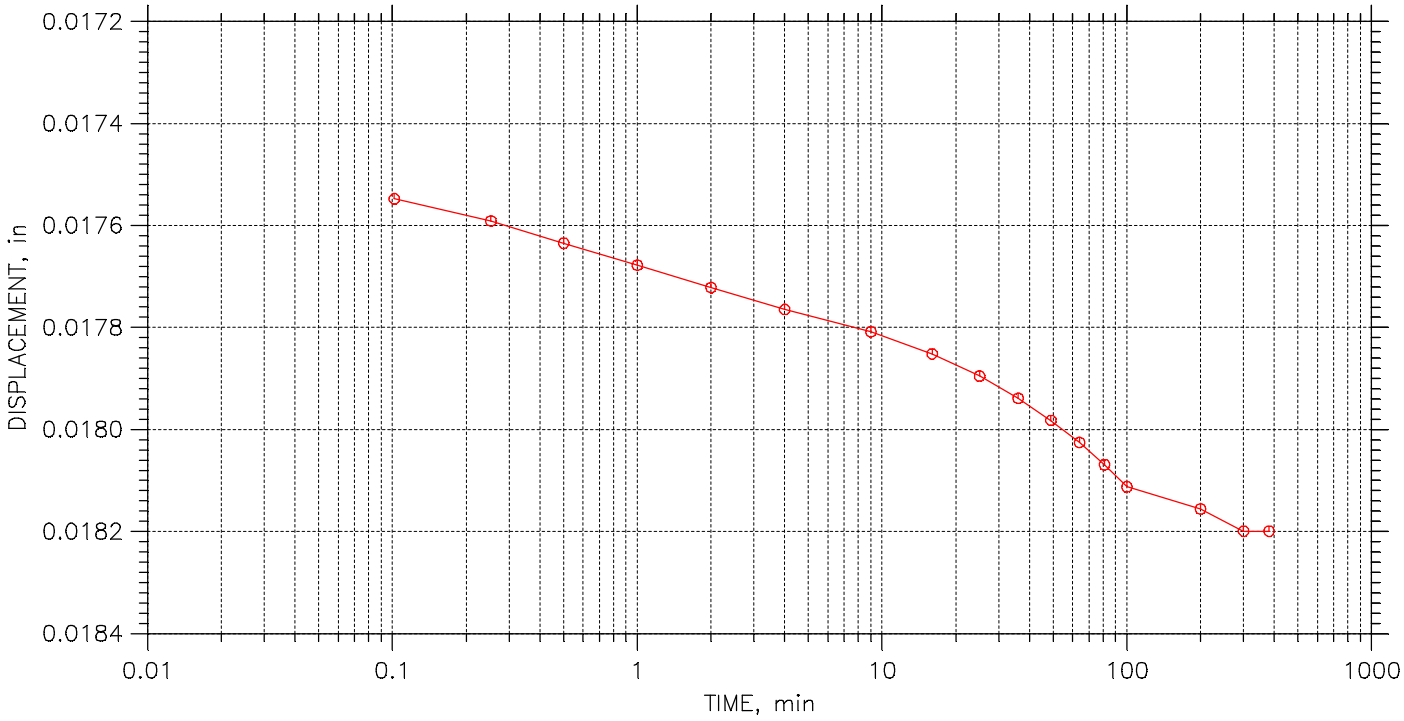

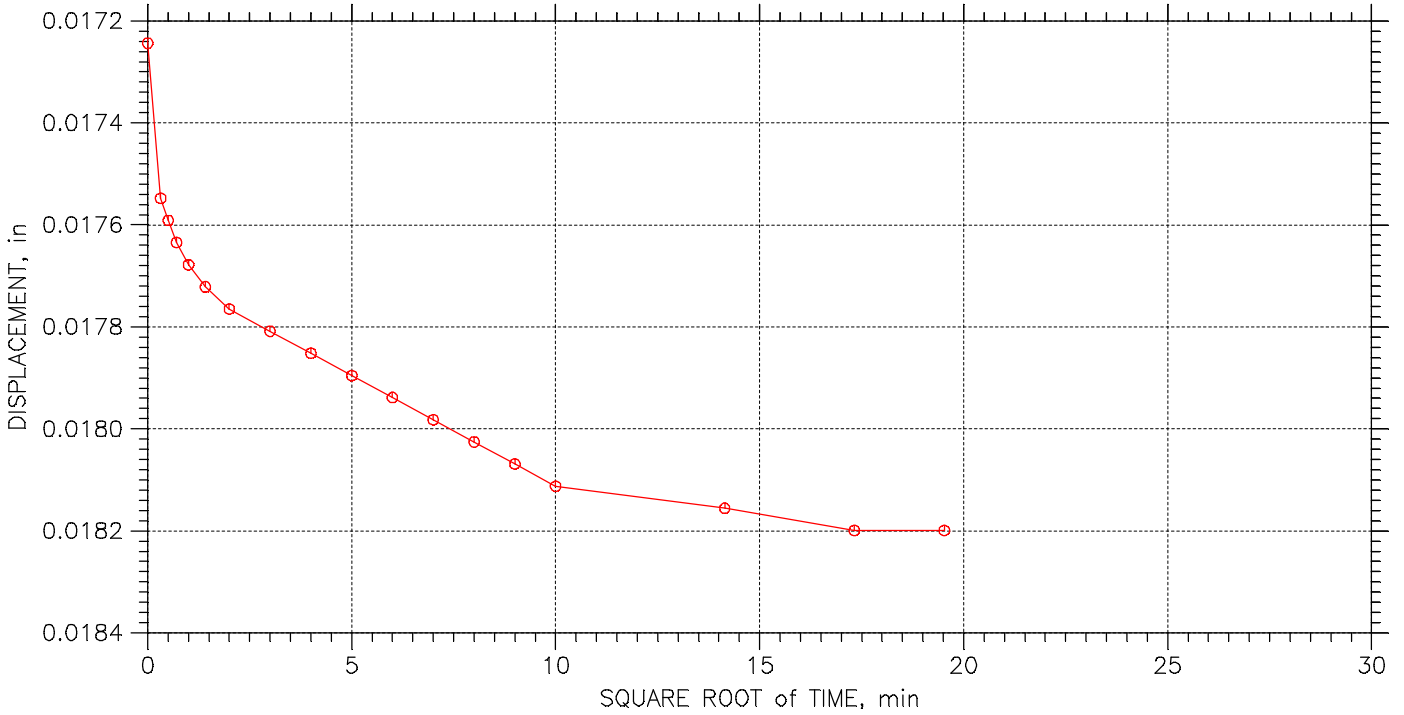

Terracon Consulting Engineers & Scientists	Project: GREEN ERA BIOTECH PT	Location: CHICAGO, IL	Project No.: MR175403
	Boring No.: B-1 18-20	Tested By: BCM	Checked By: WPQ
	Sample No.: S-7	Test Date: 11/30/17	Depth: 18.0'-20.0'
	Test No.: B11820CON	Sample Type: 3.0" ST	Elevation: ----
	Description: DARK GRAY LEAN CLAY WITH SAND TRACE GRAVEL CL 1.5" GRAVEL NOTED		
	Remarks: Pc = 2.1 tsf Cc = 0.110 Ccr = 0.010 TEST PERFORMED AS PER ASTM D2435		

CONSOLIDATION TEST DATA

TIME CURVES

Constant Load Step: 11 of 23

Stress: 0.5 tsf

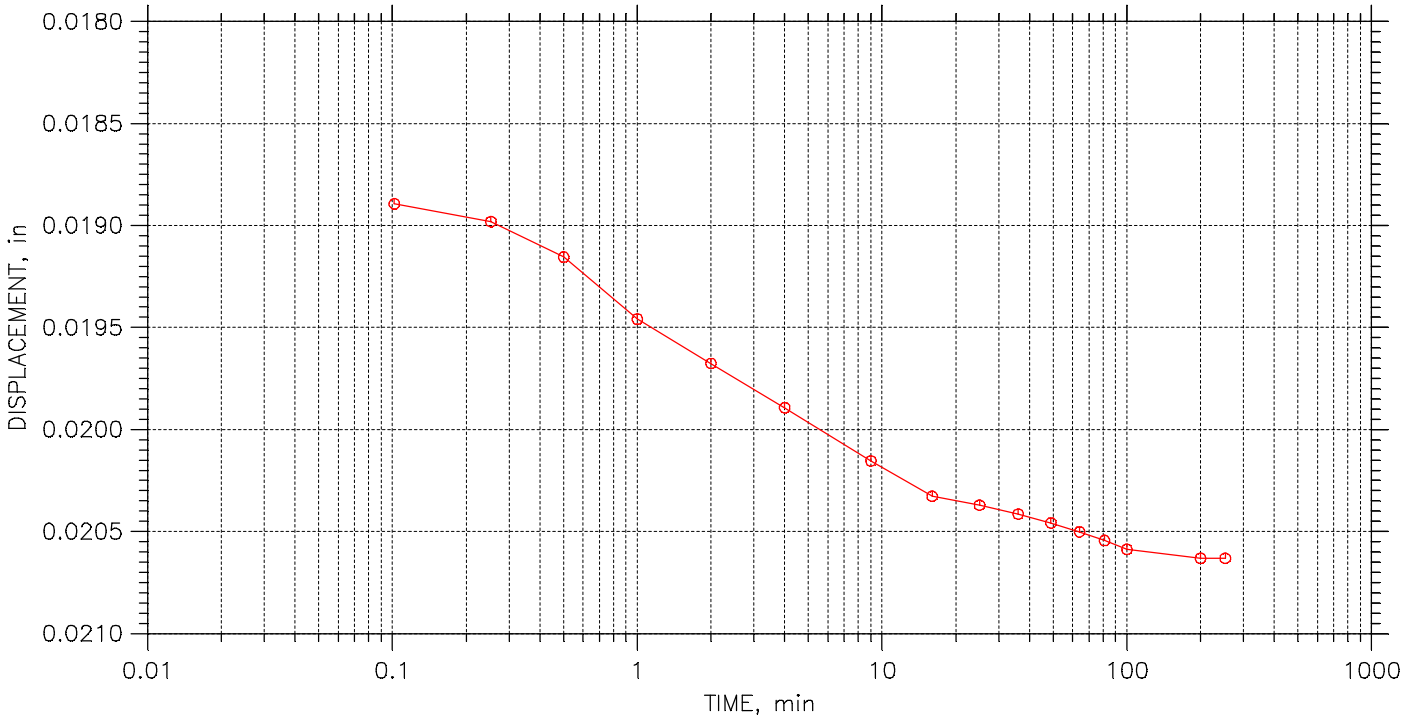

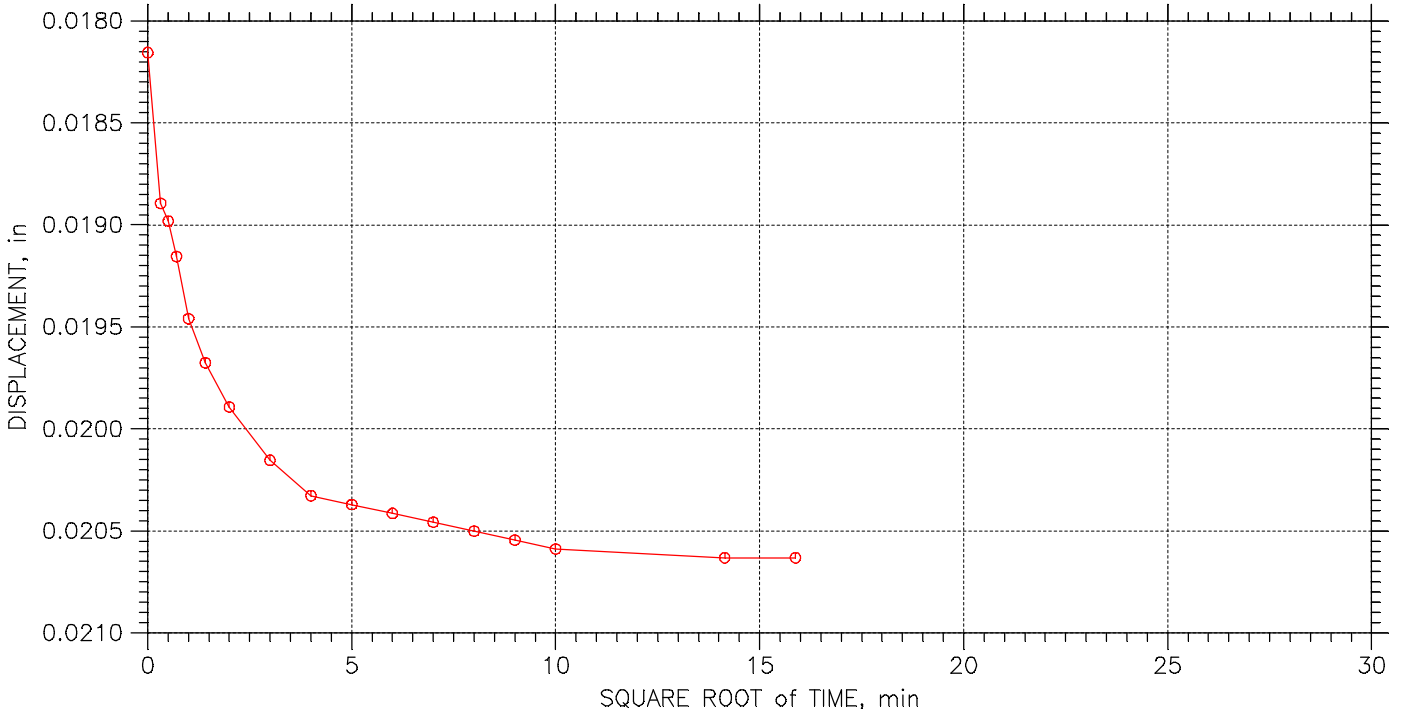

Terracon Consulting Engineers & Scientists	Project: GREEN ERA BIOTECH PT	Location: CHICAGO, IL	Project No.: MR175403
	Boring No.: B-1 18-20	Tested By: BCM	Checked By: WPQ
	Sample No.: S-7	Test Date: 11/30/17	Depth: 18.0'-20.0'
	Test No.: B11820CON	Sample Type: 3.0" ST	Elevation: ----
	Description: DARK GRAY LEAN CLAY WITH SAND TRACE GRAVEL CL 1.5" GRAVEL NOTED		
	Remarks: Pc = 2.1 tsf Cc = 0.110 Ccr = 0.010 TEST PERFORMED AS PER ASTM D2435		

CONSOLIDATION TEST DATA

TIME CURVES

Constant Load Step: 12 of 23

Stress: 0.75 tsf

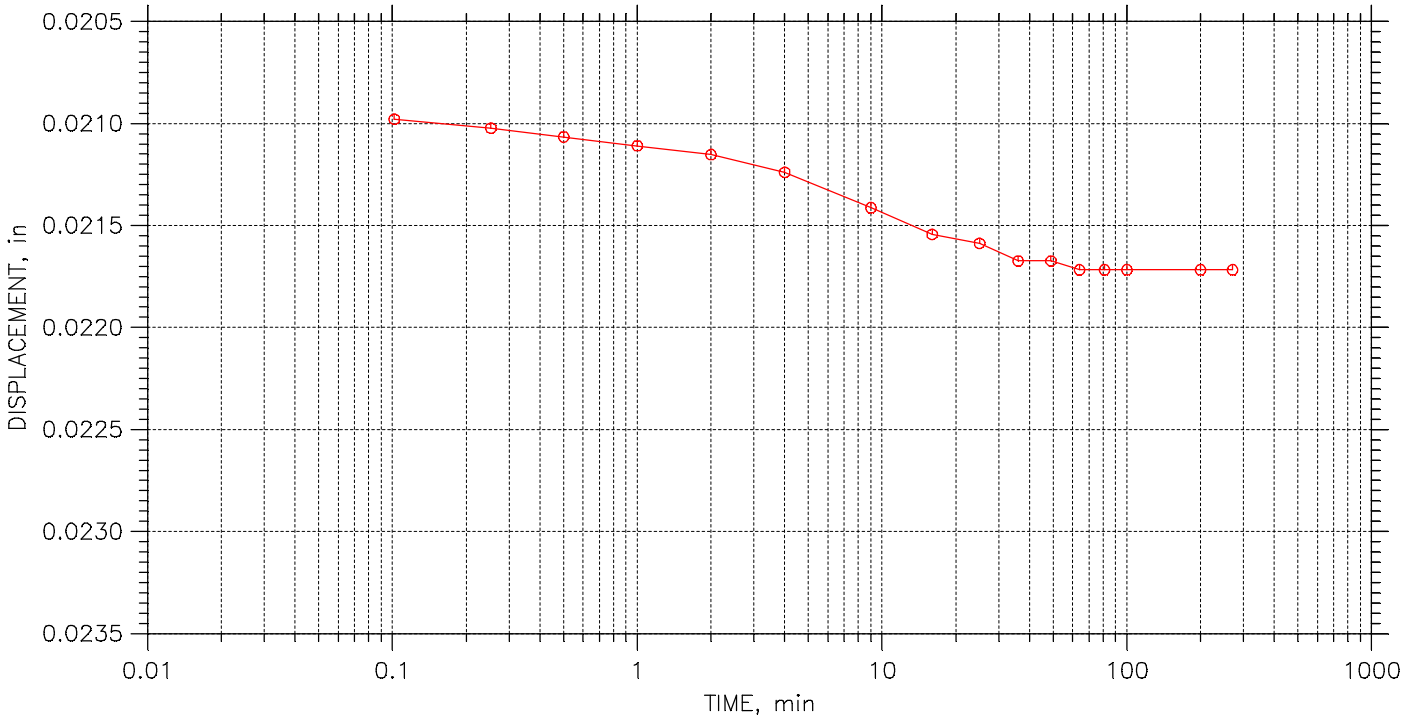

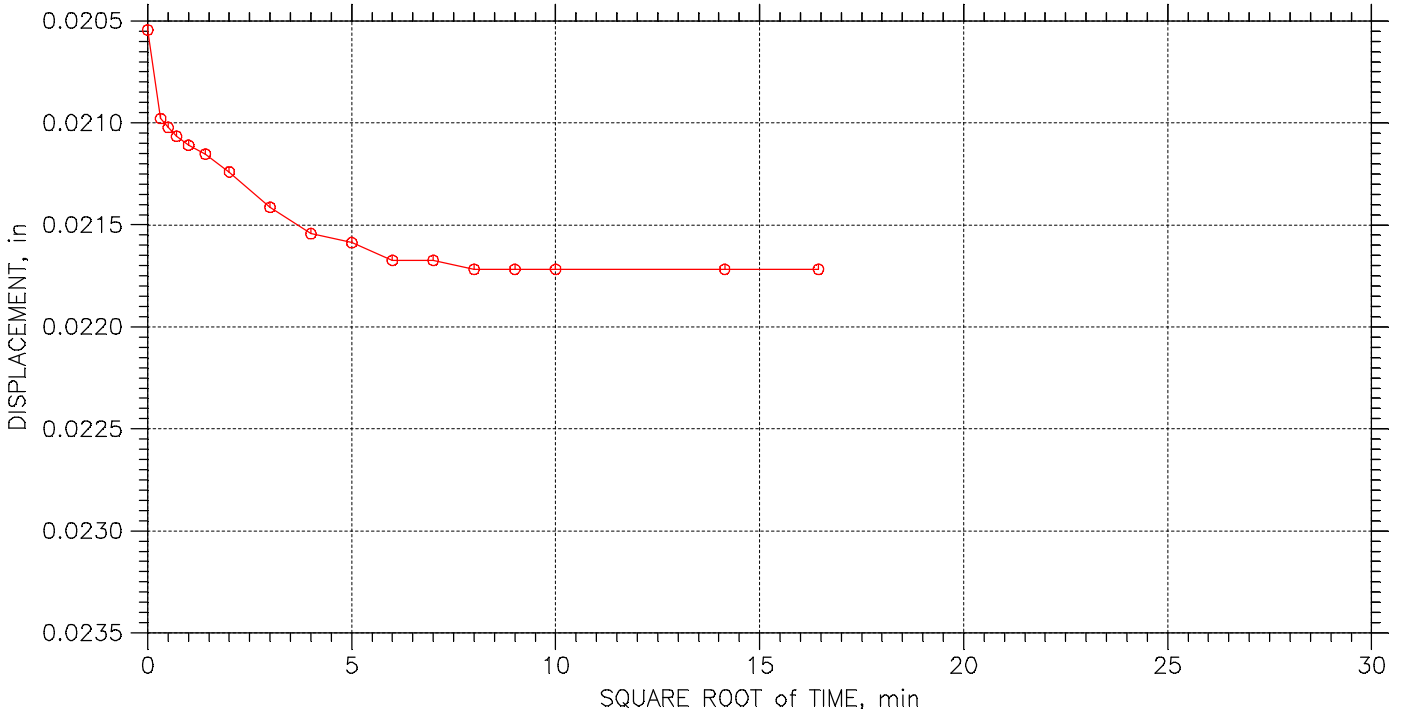

Terracon Consulting Engineers & Scientists	Project: GREEN ERA BIOTECH PT	Location: CHICAGO, IL	Project No.: MR175403
	Boring No.: B-1 18-20	Tested By: BCM	Checked By: WPQ
	Sample No.: S-7	Test Date: 11/30/17	Depth: 18.0'-20.0'
	Test No.: B11820CON	Sample Type: 3.0" ST	Elevation: ----
	Description: DARK GRAY LEAN CLAY WITH SAND TRACE GRAVEL CL 1.5" GRAVEL NOTED		
	Remarks: Pc = 2.1 tsf Cc = 0.110 Ccr = 0.010 TEST PERFORMED AS PER ASTM D2435		

CONSOLIDATION TEST DATA

TIME CURVES

Constant Load Step: 13 of 23

Stress: 1. tsf

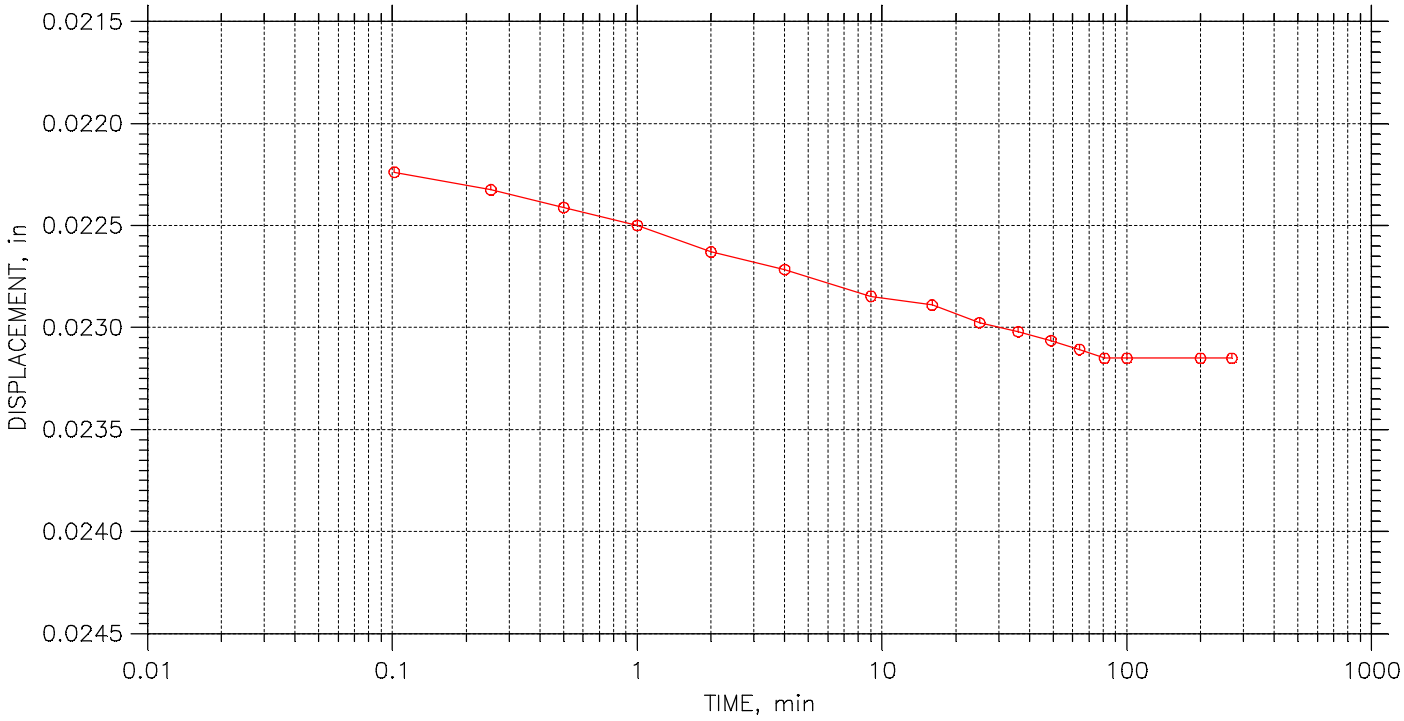

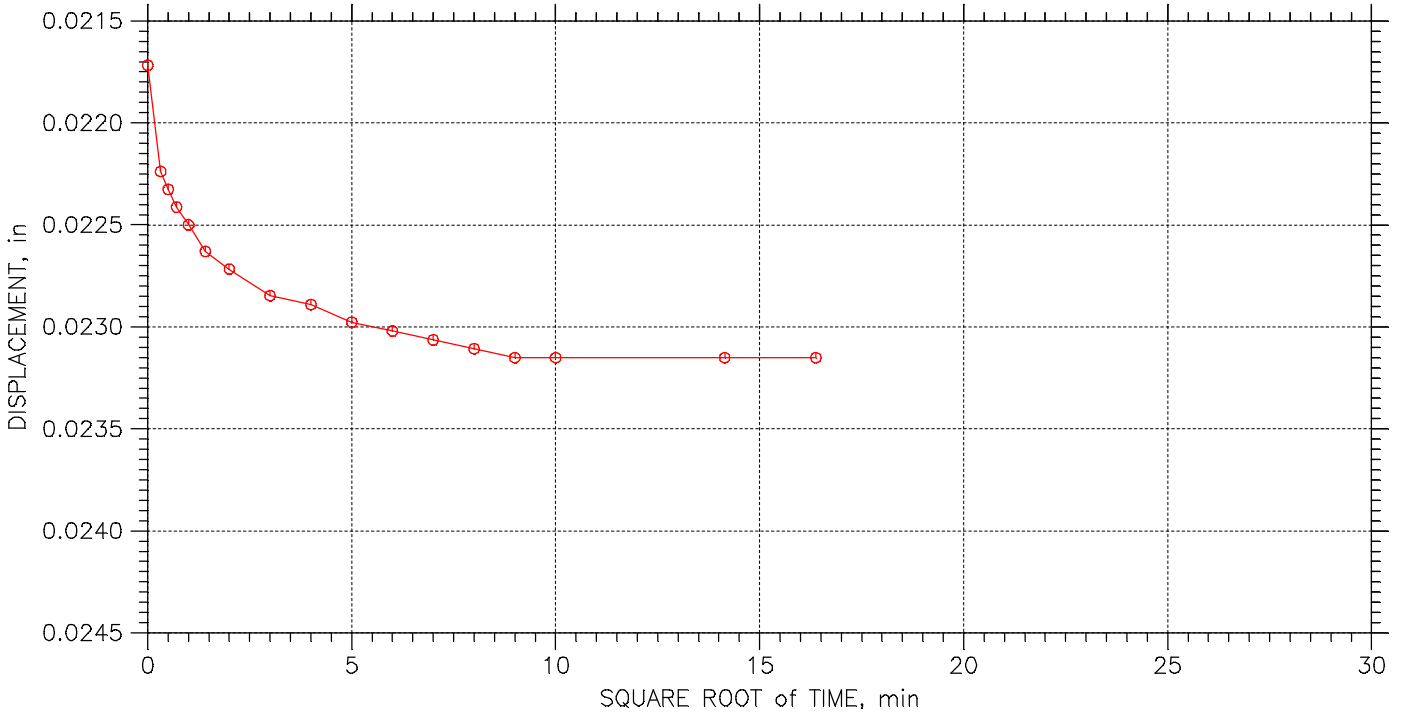

Terracon Consulting Engineers & Scientists	Project: GREEN ERA BIOTECH PT	Location: CHICAGO, IL	Project No.: MR175403
	Boring No.: B-1 18-20	Tested By: BCM	Checked By: WPQ
	Sample No.: S-7	Test Date: 11/30/17	Depth: 18.0'-20.0'
	Test No.: B11820CON	Sample Type: 3.0" ST	Elevation: ----
	Description: DARK GRAY LEAN CLAY WITH SAND TRACE GRAVEL CL 1.5" GRAVEL NOTED		
	Remarks: Pc = 2.1 tsf Cc = 0.110 Ccr = 0.010 TEST PERFORMED AS PER ASTM D2435		

CONSOLIDATION TEST DATA

TIME CURVES

Constant Load Step: 14 of 23

Stress: 2. tsf

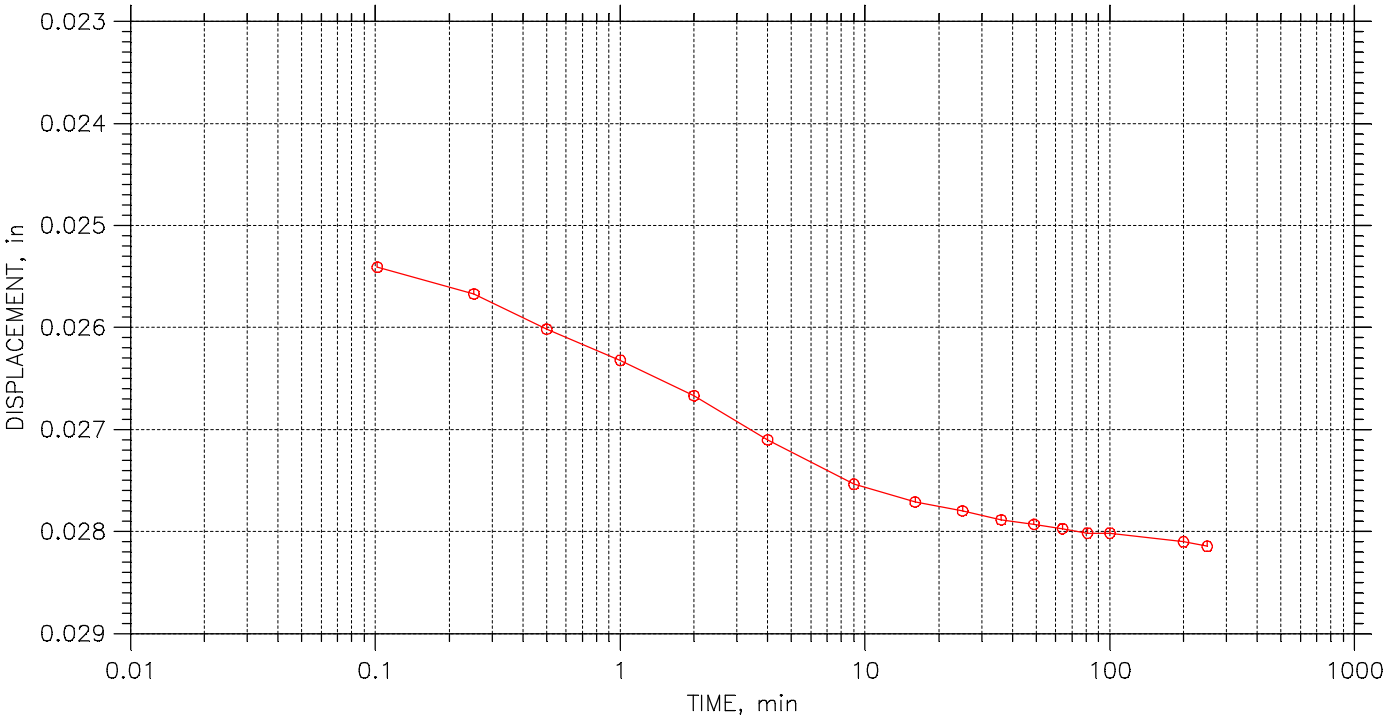

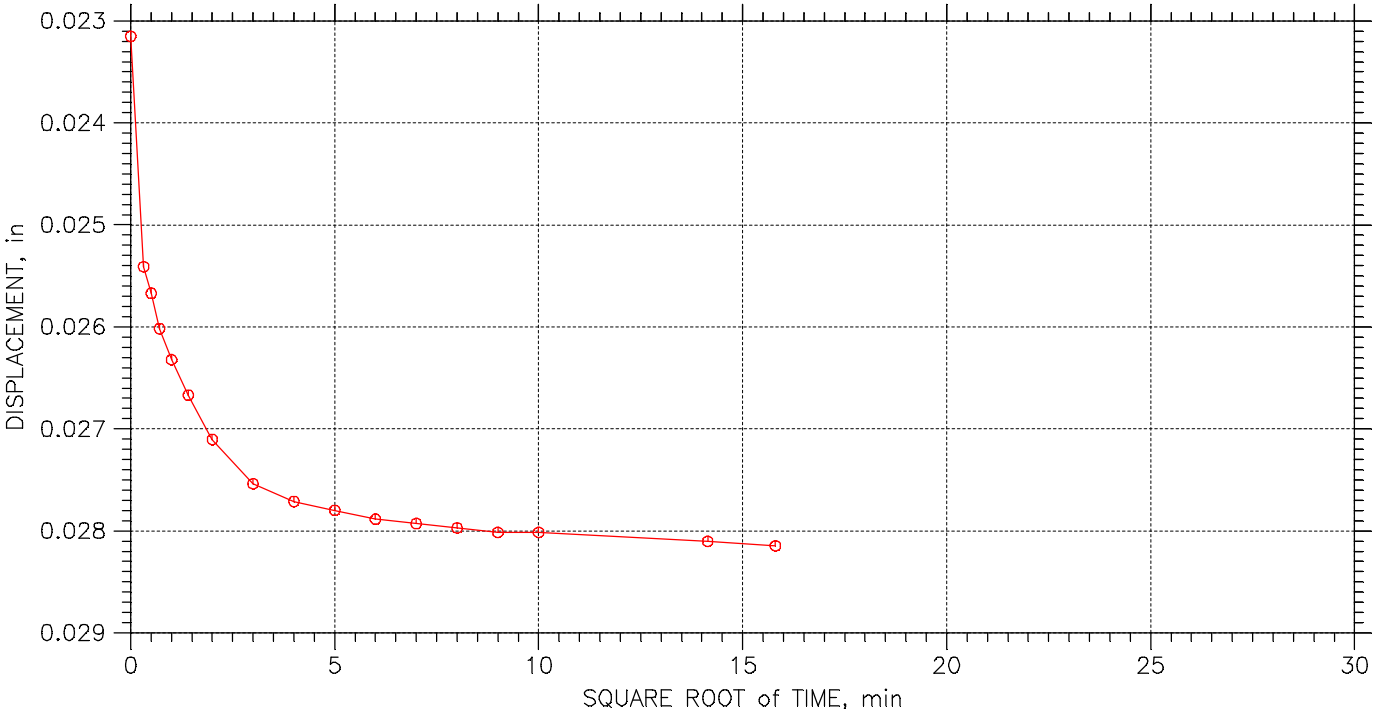

Terracon Consulting Engineers & Scientists	Project: GREEN ERA BIOTECH PT	Location: CHICAGO, IL	Project No.: MR175403
	Boring No.: B-1 18-20	Tested By: BCM	Checked By: WPQ
	Sample No.: S-7	Test Date: 11/30/17	Depth: 18.0'-20.0'
	Test No.: B11820CON	Sample Type: 3.0" ST	Elevation: ----
	Description: DARK GRAY LEAN CLAY WITH SAND TRACE GRAVEL CL 1.5" GRAVEL NOTED		
	Remarks: Pc = 2.1 tsf Cc = 0.110 Ccr = 0.010 TEST PERFORMED AS PER ASTM D2435		

CONSOLIDATION TEST DATA

TIME CURVES

Constant Load Step: 15 of 23

Stress: 4. tsf

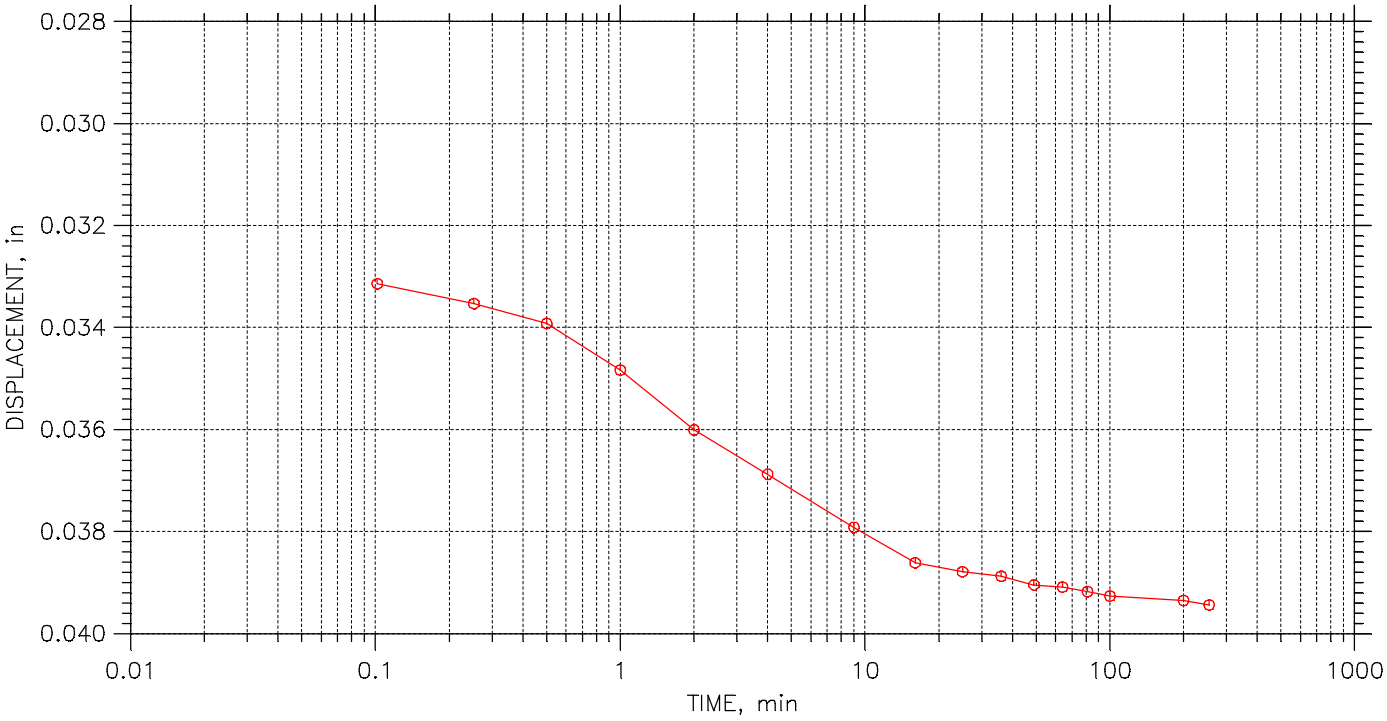

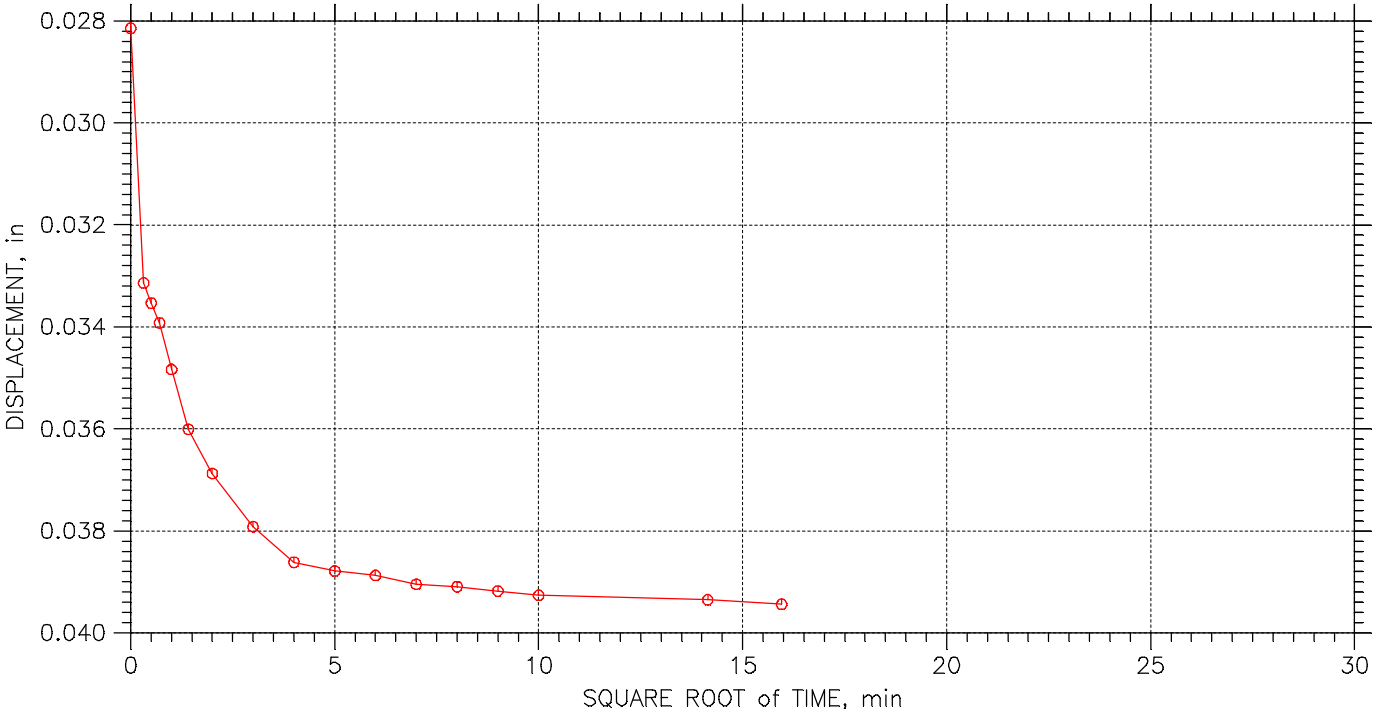

Terracon Consulting Engineers & Scientists	Project: GREEN ERA BIOTECH PT	Location: CHICAGO, IL	Project No.: MR175403
	Boring No.: B-1 18-20	Tested By: BCM	Checked By: WPQ
	Sample No.: S-7	Test Date: 11/30/17	Depth: 18.0'-20.0'
	Test No.: B11820CON	Sample Type: 3.0" ST	Elevation: ----
	Description: DARK GRAY LEAN CLAY WITH SAND TRACE GRAVEL CL 1.5" GRAVEL NOTED		
	Remarks: Pc = 2.1 tsf Cc = 0.110 Ccr = 0.010 TEST PERFORMED AS PER ASTM D2435		

CONSOLIDATION TEST DATA

TIME CURVES

Constant Load Step: 16 of 23

Stress: 8. tsf

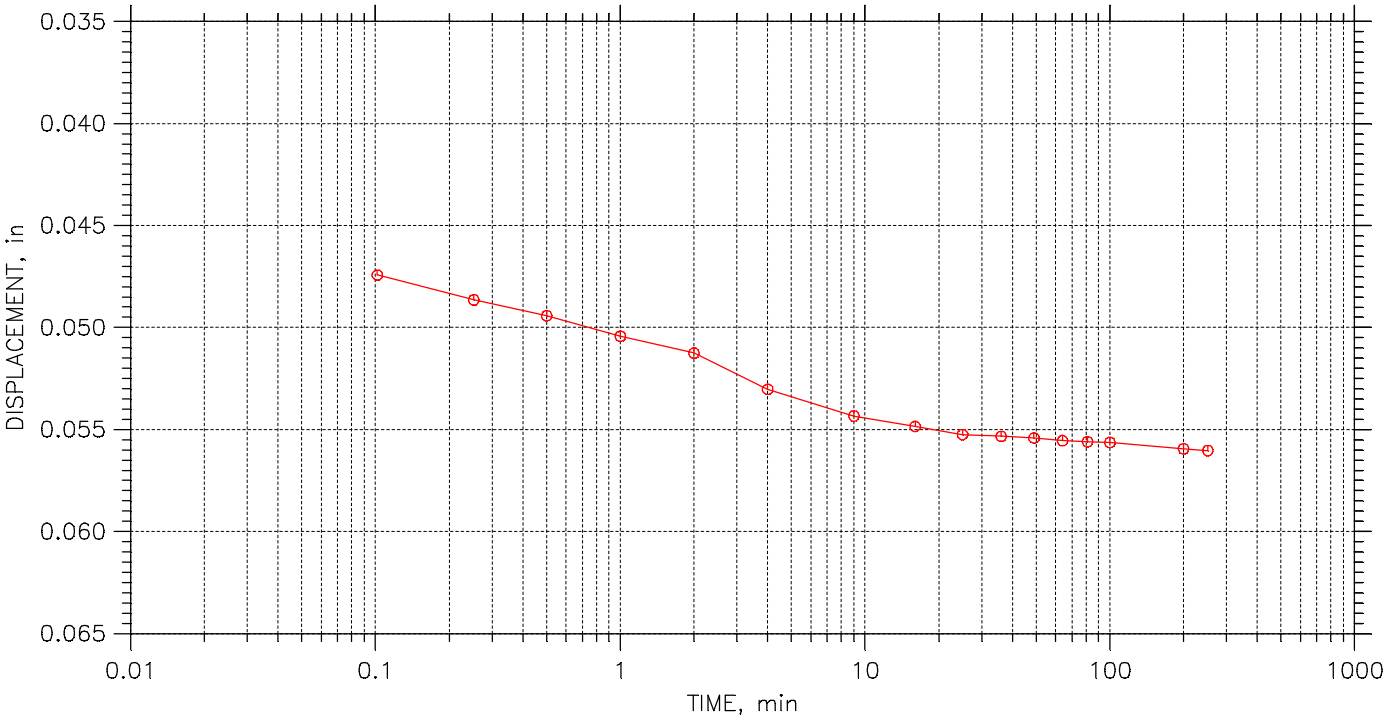

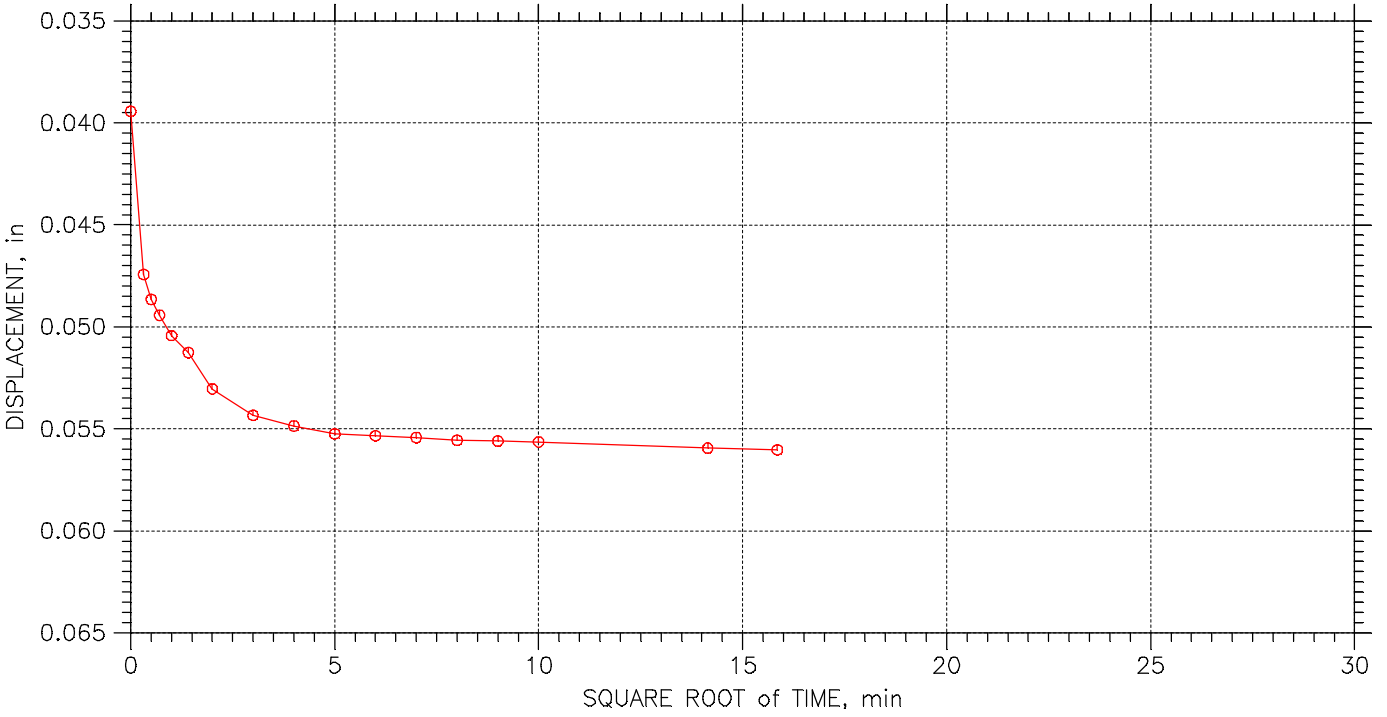

Terracon Consulting Engineers & Scientists	Project: GREEN ERA BIOTECH PT	Location: CHICAGO, IL	Project No.: MR175403
	Boring No.: B-1 18-20	Tested By: BCM	Checked By: WPQ
	Sample No.: S-7	Test Date: 11/30/17	Depth: 18.0'-20.0'
	Test No.: B11820CON	Sample Type: 3.0" ST	Elevation: ----
	Description: DARK GRAY LEAN CLAY WITH SAND TRACE GRAVEL CL 1.5" GRAVEL NOTED		
	Remarks: Pc = 2.1 tsf Cc = 0.110 Ccr = 0.010 TEST PERFORMED AS PER ASTM D2435		

CONSOLIDATION TEST DATA

TIME CURVES

Constant Load Step: 17 of 23

Stress: 16. tsf

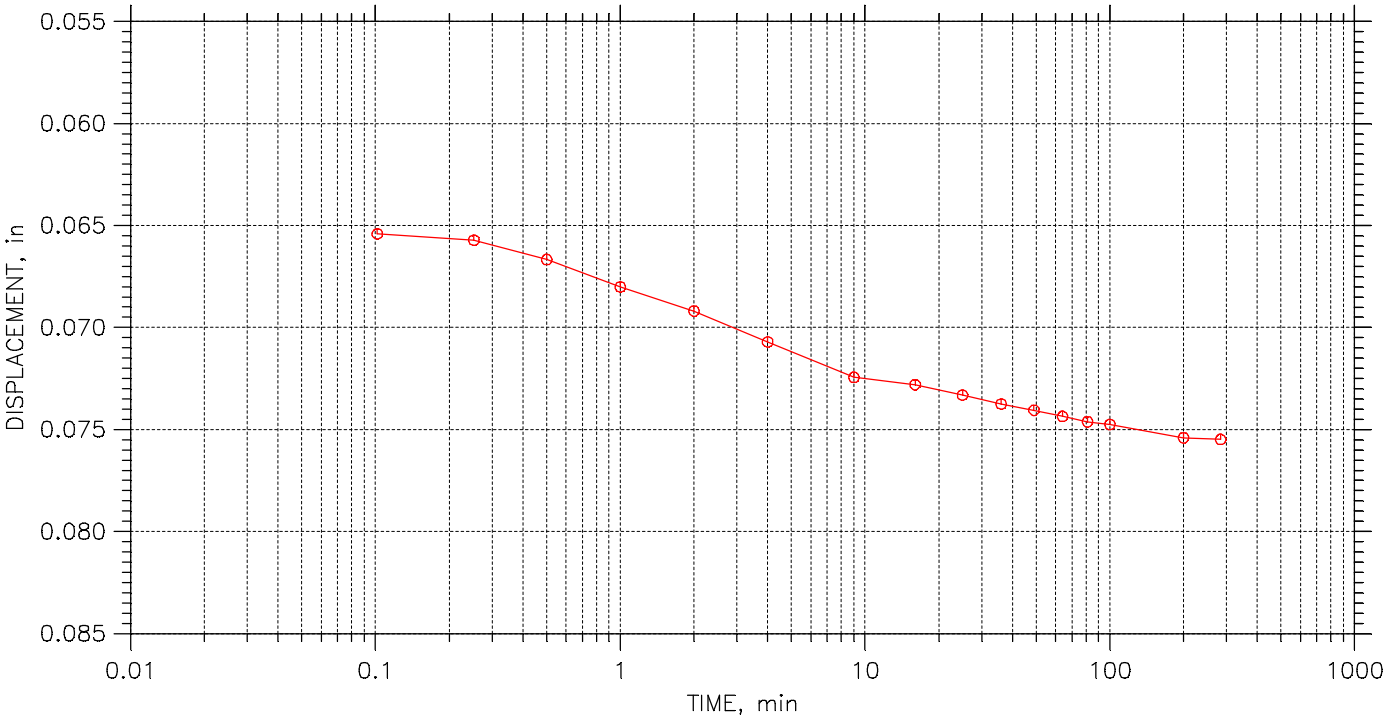

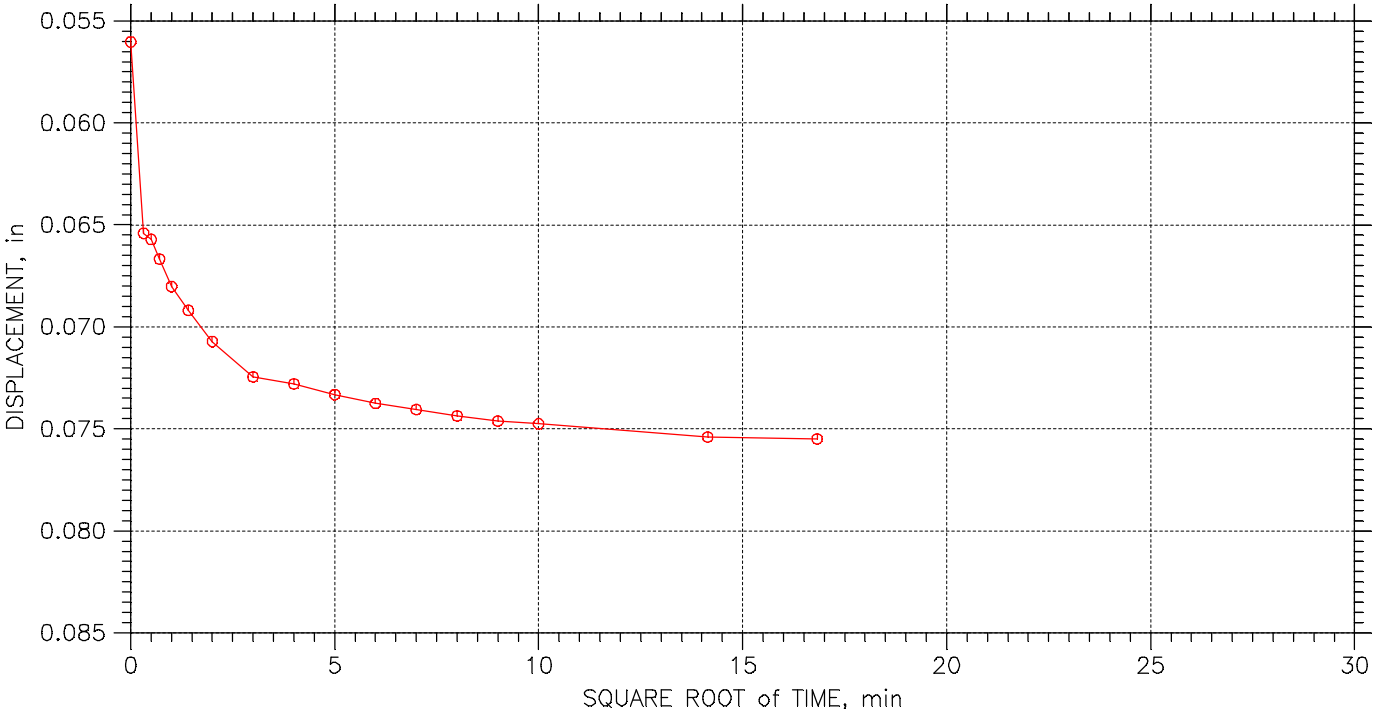

Terracon Consulting Engineers & Scientists	Project: GREEN ERA BIOTECH PT	Location: CHICAGO, IL	Project No.: MR175403
	Boring No.: B-1 18-20	Tested By: BCM	Checked By: WPQ
	Sample No.: S-7	Test Date: 11/30/17	Depth: 18.0'-20.0'
	Test No.: B11820CON	Sample Type: 3.0" ST	Elevation: ----
	Description: DARK GRAY LEAN CLAY WITH SAND TRACE GRAVEL CL 1.5" GRAVEL NOTED		
	Remarks: Pc = 2.1 tsf Cc = 0.110 Ccr = 0.010 TEST PERFORMED AS PER ASTM D2435		

CONSOLIDATION TEST DATA

TIME CURVES

Constant Load Step: 18 of 23

Stress: 32. tsf

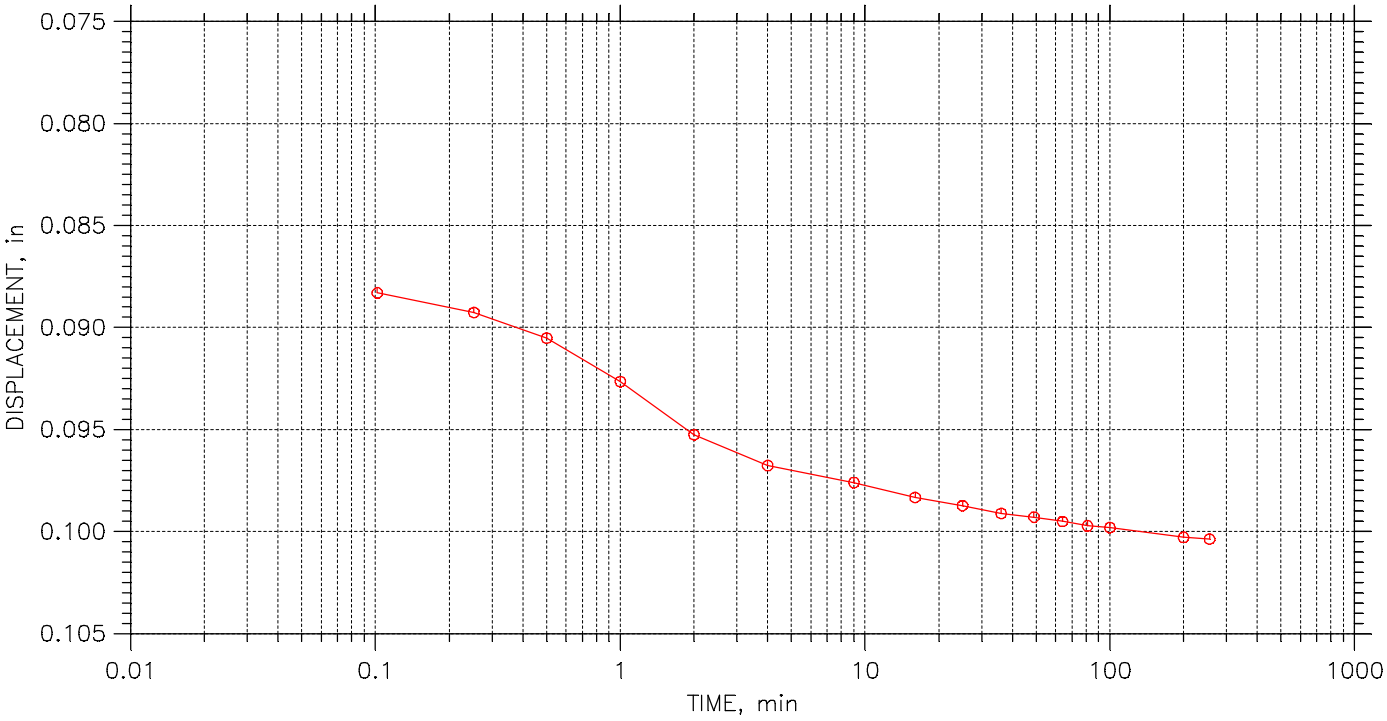

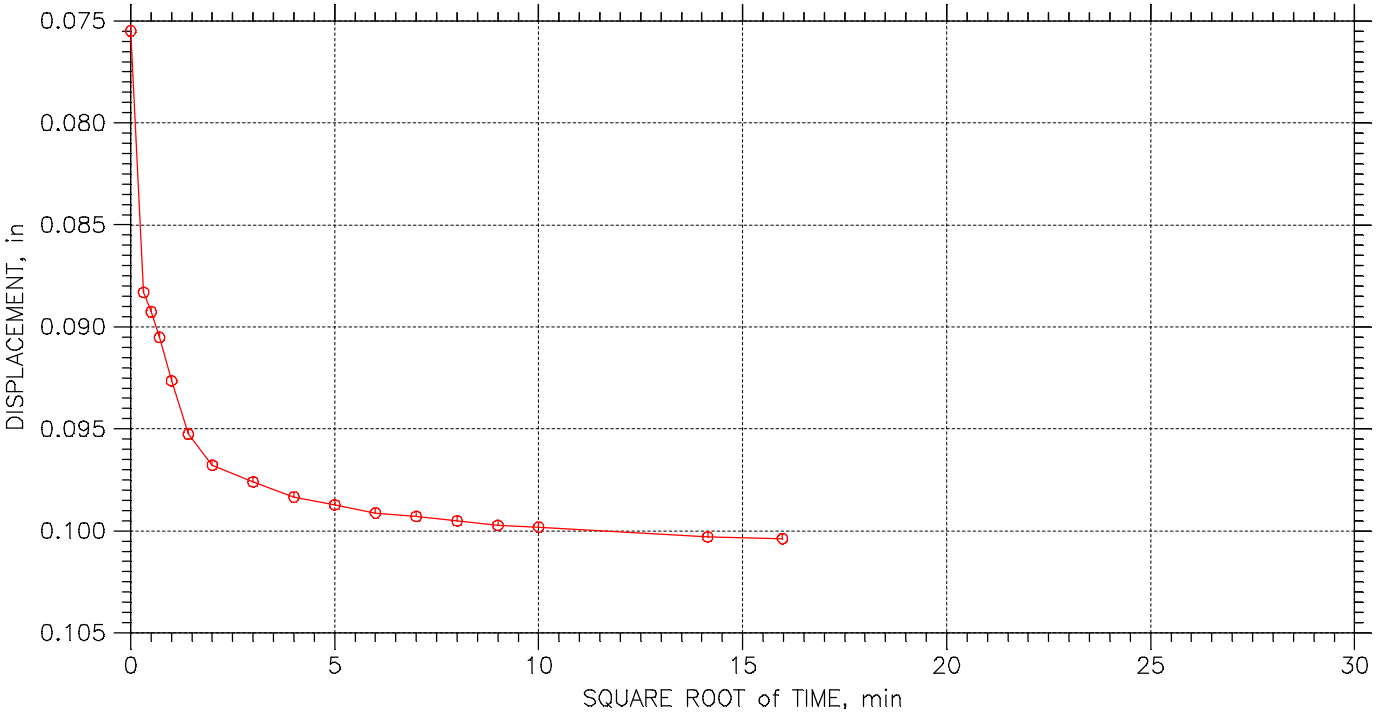

Terracon Consulting Engineers & Scientists	Project: GREEN ERA BIOTECH PT	Location: CHICAGO, IL	Project No.: MR175403
	Boring No.: B-1 18-20	Tested By: BCM	Checked By: WPQ
	Sample No.: S-7	Test Date: 11/30/17	Depth: 18.0'-20.0'
	Test No.: B11820CON	Sample Type: 3.0" ST	Elevation: ----
	Description: DARK GRAY LEAN CLAY WITH SAND TRACE GRAVEL CL 1.5" GRAVEL NOTED		
	Remarks: Pc = 2.1 tsf Cc = 0.110 Ccr = 0.010 TEST PERFORMED AS PER ASTM D2435		

CONSOLIDATION TEST DATA

TIME CURVES

Constant Load Step: 19 of 23

Stress: 16. tsf

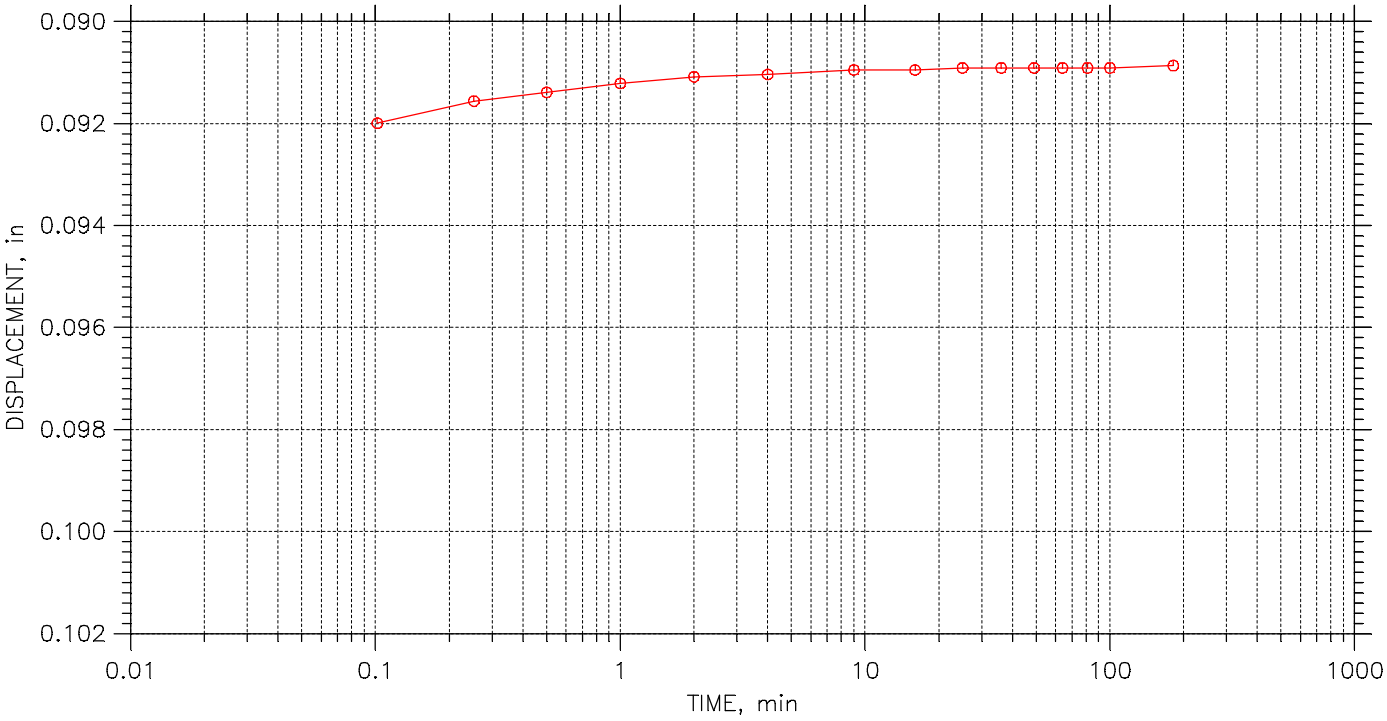

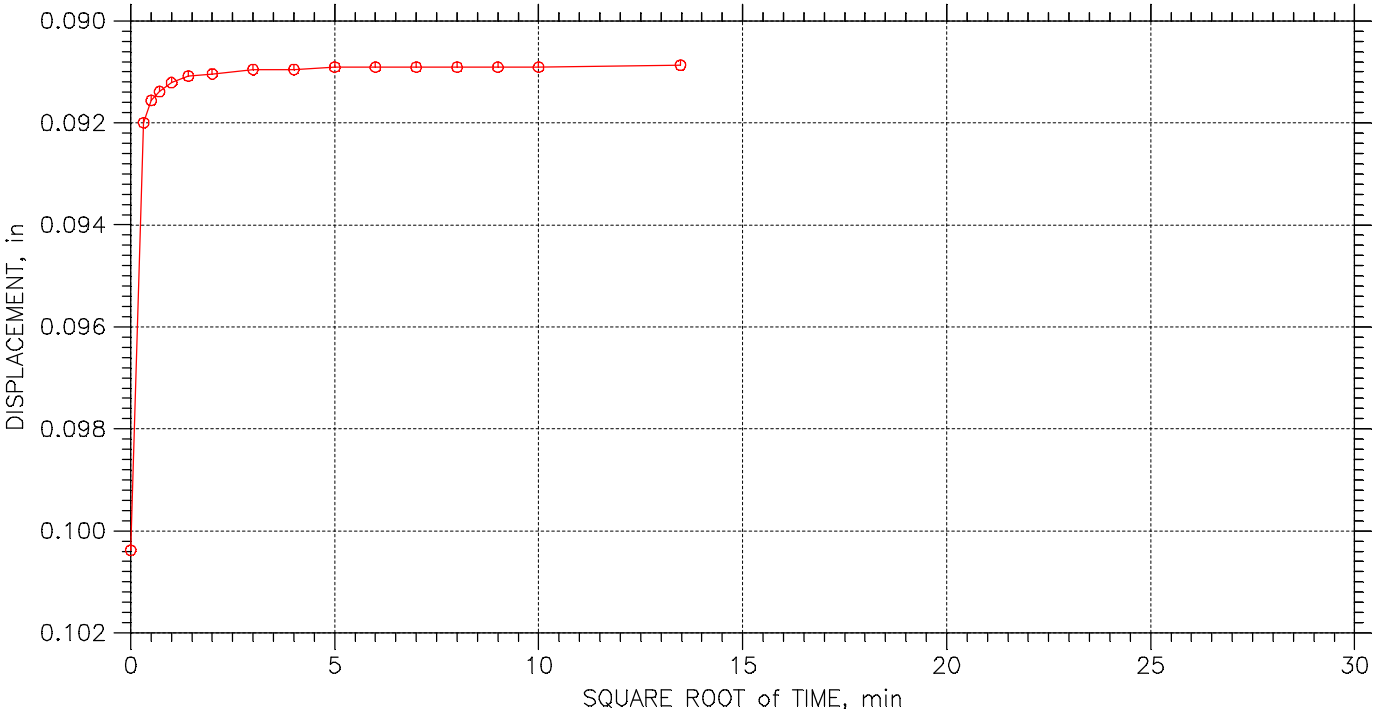

Terracon Consulting Engineers & Scientists	Project: GREEN ERA BIOTECH PT	Location: CHICAGO, IL	Project No.: MR175403
	Boring No.: B-1 18-20	Tested By: BCM	Checked By: WPQ
	Sample No.: S-7	Test Date: 11/30/17	Depth: 18.0'-20.0'
	Test No.: B11820CON	Sample Type: 3.0" ST	Elevation: ----
	Description: DARK GRAY LEAN CLAY WITH SAND TRACE GRAVEL CL 1.5" GRAVEL NOTED		
	Remarks: Pc = 2.1 tsf Cc = 0.110 Ccr = 0.010 TEST PERFORMED AS PER ASTM D2435		

CONSOLIDATION TEST DATA

TIME CURVES

Constant Load Step: 20 of 23

Stress: 4. tsf

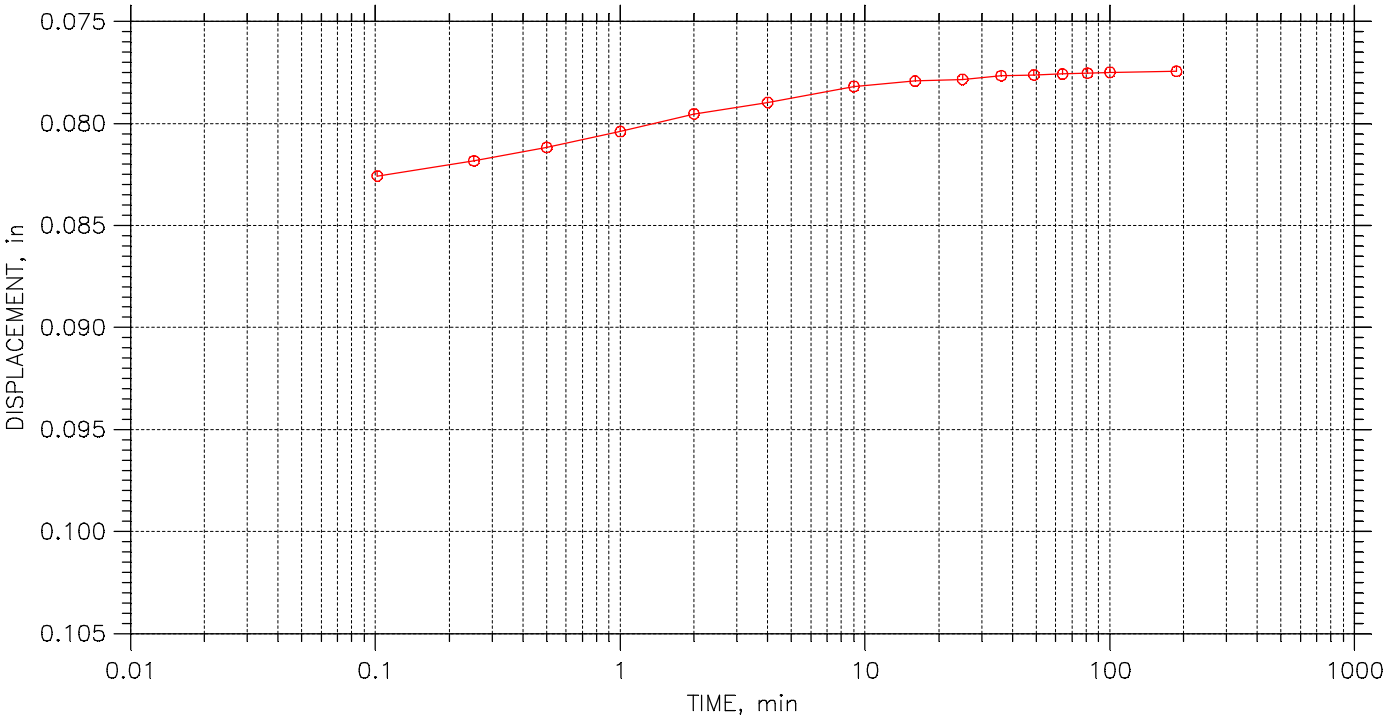

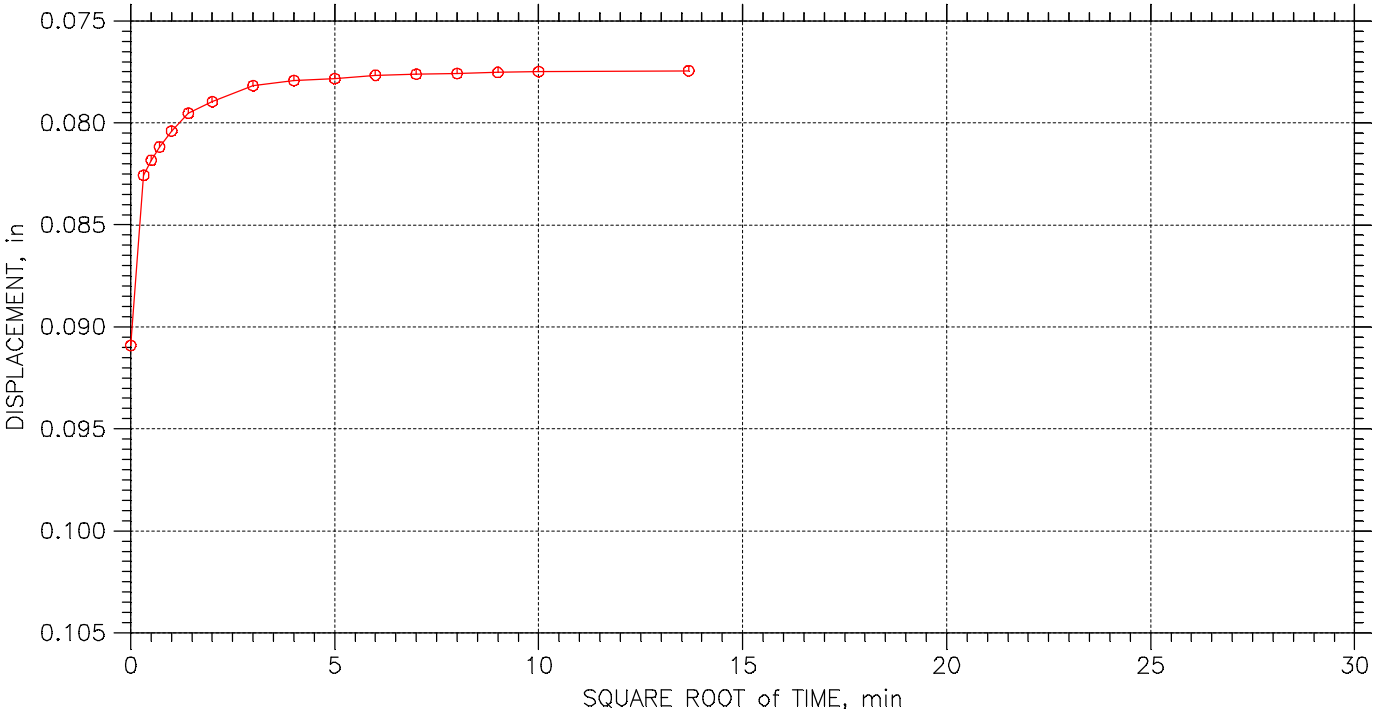

Terracon Consulting Engineers & Scientists	Project: GREEN ERA BIOTECH PT	Location: CHICAGO, IL	Project No.: MR175403
	Boring No.: B-1 18-20	Tested By: BCM	Checked By: WPQ
	Sample No.: S-7	Test Date: 11/30/17	Depth: 18.0'-20.0'
	Test No.: B11820CON	Sample Type: 3.0" ST	Elevation: ----
	Description: DARK GRAY LEAN CLAY WITH SAND TRACE GRAVEL CL 1.5" GRAVEL NOTED		
	Remarks: Pc = 2.1 tsf Cc = 0.110 Ccr = 0.010 TEST PERFORMED AS PER ASTM D2435		

CONSOLIDATION TEST DATA

TIME CURVES

Constant Load Step: 21 of 23

Stress: 1. tsf

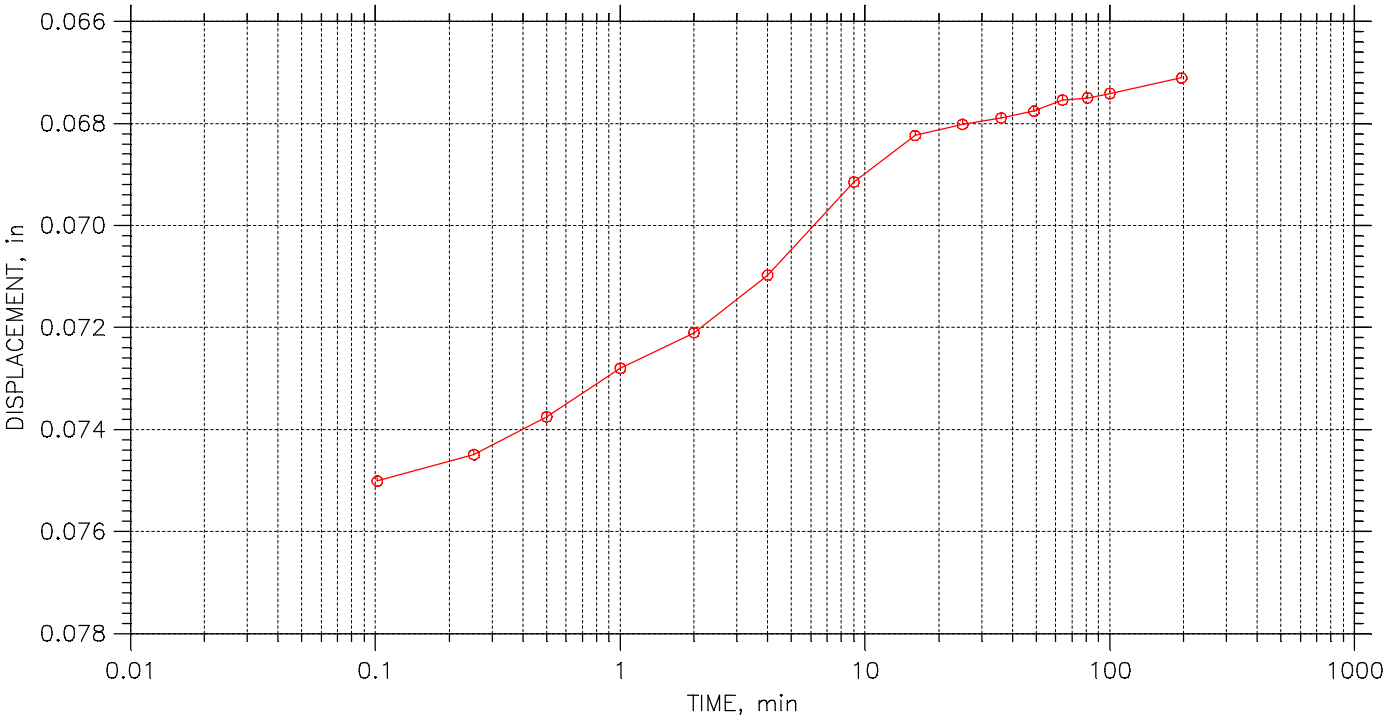

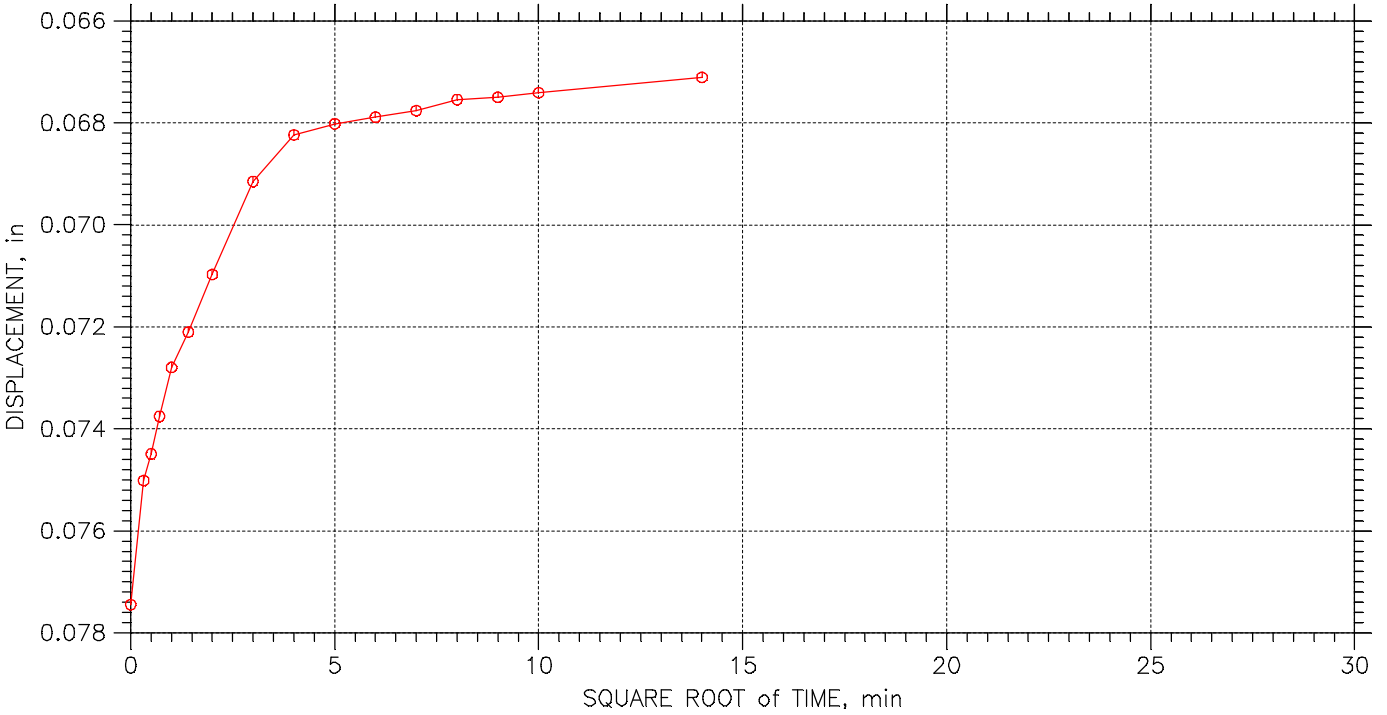

Terracon Consulting Engineers & Scientists	Project: GREEN ERA BIOTECH PT	Location: CHICAGO, IL	Project No.: MR175403
	Boring No.: B-1 18-20	Tested By: BCM	Checked By: WPQ
	Sample No.: S-7	Test Date: 11/30/17	Depth: 18.0'-20.0'
	Test No.: B11820CON	Sample Type: 3.0" ST	Elevation: ----
	Description: DARK GRAY LEAN CLAY WITH SAND TRACE GRAVEL CL 1.5" GRAVEL NOTED		
	Remarks: Pc = 2.1 tsf Cc = 0.110 Ccr = 0.010 TEST PERFORMED AS PER ASTM D2435		

CONSOLIDATION TEST DATA

TIME CURVES

Constant Load Step: 22 of 23

Stress: 0.5 tsf

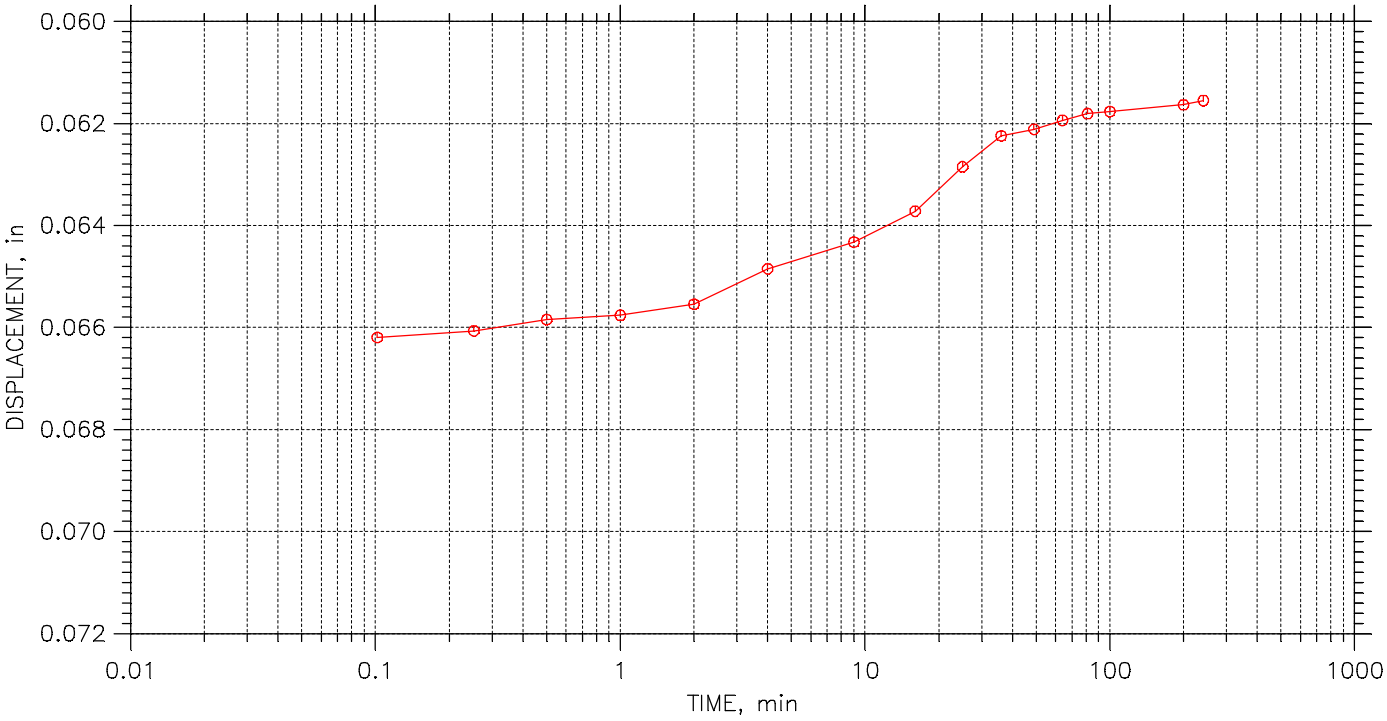

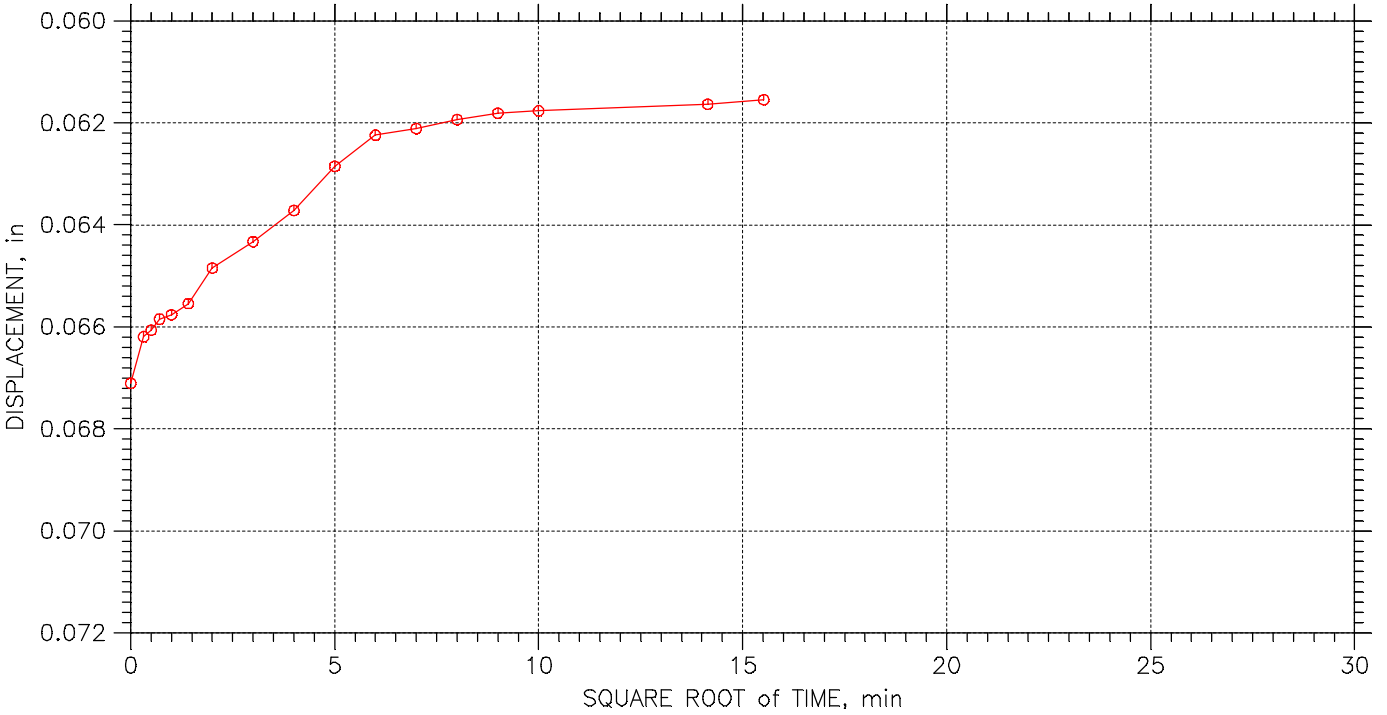

Terracon Consulting Engineers & Scientists	Project: GREEN ERA BIOTECH PT	Location: CHICAGO, IL	Project No.: MR175403
	Boring No.: B-1 18-20	Tested By: BCM	Checked By: WPQ
	Sample No.: S-7	Test Date: 11/30/17	Depth: 18.0'-20.0'
	Test No.: B11820CON	Sample Type: 3.0" ST	Elevation: ----
	Description: DARK GRAY LEAN CLAY WITH SAND TRACE GRAVEL CL 1.5" GRAVEL NOTED		
	Remarks: Pc = 2.1 tsf Cc = 0.110 Ccr = 0.010 TEST PERFORMED AS PER ASTM D2435		

CONSOLIDATION TEST DATA

TIME CURVES

Constant Load Step: 23 of 23

Stress: 0.125 tsf

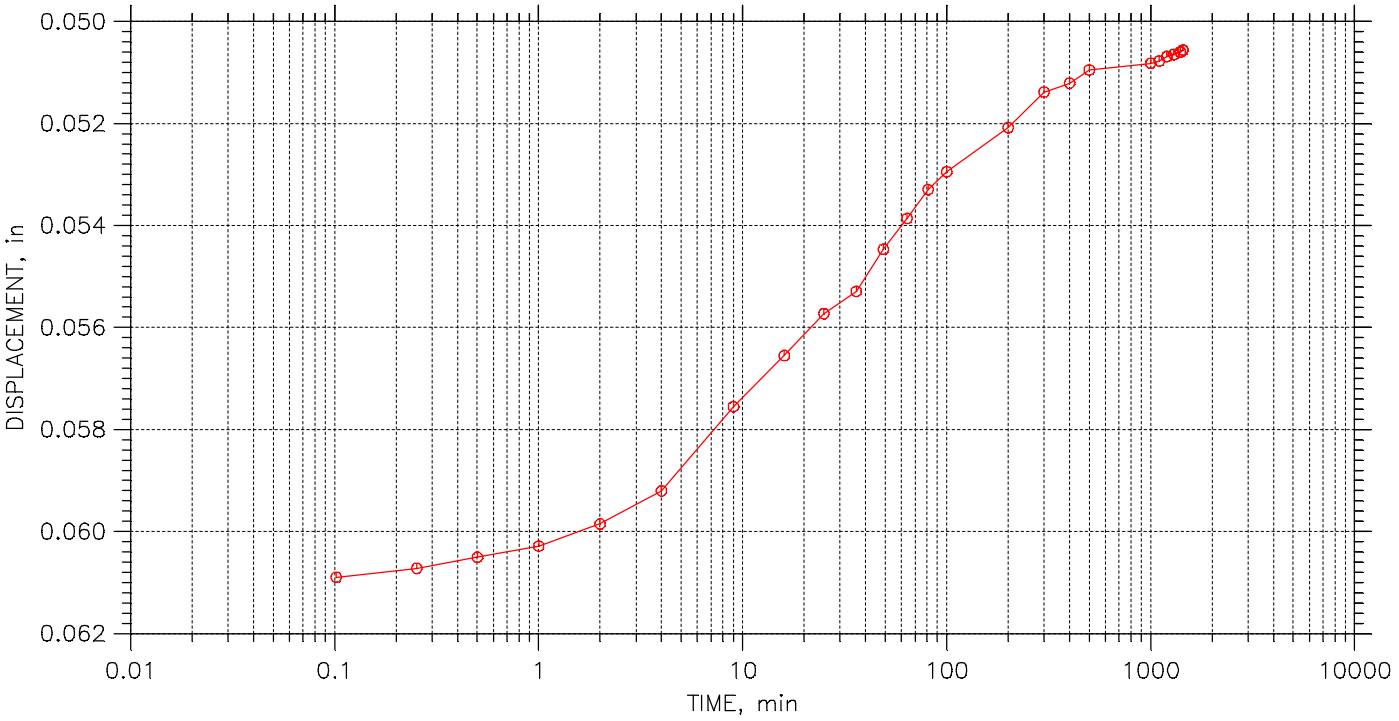

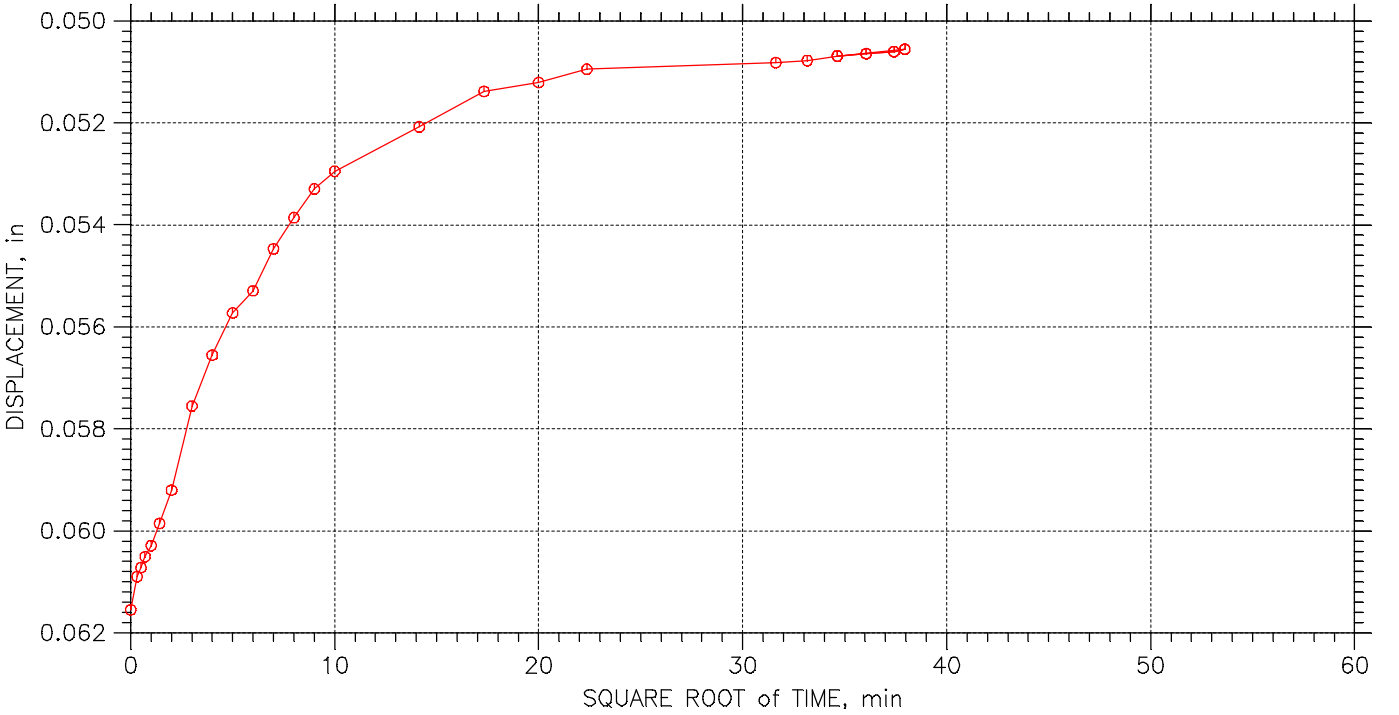

Terracon Consulting Engineers & Scientists	Project: GREEN ERA BIOTECH PT	Location: CHICAGO, IL	Project No.: MR175403
	Boring No.: B-1 18-20	Tested By: BCM	Checked By: WPQ
	Sample No.: S-7	Test Date: 11/30/17	Depth: 18.0'-20.0'
	Test No.: B11820CON	Sample Type: 3.0" ST	Elevation: ----
	Description: DARK GRAY LEAN CLAY WITH SAND TRACE GRAVEL CL 1.5" GRAVEL NOTED		
	Remarks: Pc = 2.1 tsf Cc = 0.110 Ccr = 0.010 TEST PERFORMED AS PER ASTM D2435		

CONSOLIDATION TEST DATA

Terracon Consulting Engineers & Scientists

Project: GREEN ERA BIOTECH PT | Location: CHICAGO, IL | Project No.: MR175403
Boring No.: B-1 18-20 | Tested By: BCM | Checked By: WPQ
Sample No.: S-7 | Test Date: 11/30/17 | Depth: 18.0'-20.0'
Test No.: B11820CON | Sample Type: 3.0" ST | Elevation: ----

Soil Description: DARK GRAY LEAN CLAY WITH SAND TRACE GRAVEL CL 1.5" GRAVEL NOTED
Remarks: Pc = 2.1 tsf Cc = 0.110 Ccr = 0.010 TEST PERFORMED AS PER ASTM D2435

Estimated Specific Gravity: 2.72 | Liquid Limit: 27 | Initial Height: 0.75 in
Initial Void Ratio: 0.47 | Plastic Limit: 15 | Specimen Diameter: 2.50 in
Final Void Ratio: 0.38 | Plasticity Index: 12

	Before Consolidation		After Consolidation	
	Trimmings	Specimen+Ring	Specimen+Ring	Trimmings
Container ID	X-3	RING	RING	X-5
Wt. Container + Wet Soil, gm	165.46	206.24	204.5	171.81
Wt. Container + Dry Soil, gm	148.89	189.1	189.1	156.37
Wt. Container, gm	42.66	77.21	77.21	44.22
Wt. Dry Soil, gm	106.23	111.89	111.89	112.15
Water Content, %	15.60	15.32	13.76	13.76
Void Ratio	---	0.47	0.38	---
Degree of Saturation, %	---	87.73	99.62	---
Dry Unit Weight, pcf	---	115.13	123.42	---

CONSOLIDATION TEST DATA

Terracon Consulting Engineers & Scientists

Project: GREEN ERA BIOTECH PT | Location: CHICAGO, IL | Project No.: MR175403
Boring No.: B-1 18-20 | Tested By: BCM | Checked By: WPQ
Sample No.: S-7 | Test Date: 11/30/17 | Depth: 18.0'-20.0'
Test No.: B11820CON | Sample Type: 3.0" ST | Elevation: ----

Soil Description: DARK GRAY LEAN CLAY WITH SAND TRACE GRAVEL CL 1.5" GRAVEL NOTED
Remarks: Pc = 2.1 tsf Cc = 0.110 Ccr = 0.010 TEST PERFORMED AS PER ASTM D2435

	Applied Stress tsf	Final Displacement in	Void Ratio	Strain at End %	T50 Fitting Sq.Rt. min	T50 Fitting Log min	Coefficient of Consolidation Sq.Rt. ft^2/sec	Coefficient of Consolidation Log ft^2/sec	Coefficient of Consolidation Ave. ft^2/sec
1	0.125	0.003258	0.469	0.43	0.0	0.0	1.35e-004	0.00e+000	1.35e-004
2	0.25	0.005299	0.465	0.70	3.8	0.7	8.31e-007	4.90e-006	1.42e-006
3	0.5	0.009903	0.456	1.32	0.2	0.0	1.31e-005	0.00e+000	1.31e-005
4	0.75	0.01351	0.448	1.80	1.9	0.6	1.66e-006	4.97e-006	2.49e-006
5	1	0.01729	0.441	2.30	11.4	0.0	2.71e-007	0.00e+000	2.71e-007
6	2	0.02719	0.422	3.61	0.9	0.0	3.21e-006	0.00e+000	3.21e-006
7	1	0.02402	0.428	3.19	0.2	0.0	1.29e-005	0.00e+000	1.29e-005
8	0.5	0.02202	0.432	2.93	2.8	1.3	1.08e-006	2.39e-006	1.49e-006
9	0.125	0.01724	0.441	2.29	2.1	0.0	1.46e-006	0.00e+000	1.46e-006
10	0.25	0.0182	0.439	2.42	23.3	0.0	1.32e-007	0.00e+000	1.32e-007
11	0.5	0.02063	0.434	2.74	2.1	0.0	1.46e-006	0.00e+000	1.46e-006
12	0.75	0.02172	0.432	2.89	3.7	0.0	8.27e-007	0.00e+000	8.27e-007
13	1	0.02315	0.430	3.08	2.1	0.0	1.45e-006	0.00e+000	1.45e-006
14	2	0.02815	0.420	3.74	0.9	0.0	3.23e-006	0.00e+000	3.23e-006
15	4	0.03944	0.398	5.24	2.1	0.4	1.40e-006	7.81e-006	2.38e-006
16	8	0.05603	0.365	7.45	0.7	0.0	3.99e-006	0.00e+000	3.99e-006
17	16	0.07549	0.327	10.03	1.0	0.0	2.81e-006	0.00e+000	2.81e-006
18	32	0.1004	0.278	13.34	0.5	0.0	5.47e-006	0.00e+000	5.47e-006
19	16	0.09087	0.297	12.08	0.0	0.0	1.04e-004	0.00e+000	1.04e-004
20	4	0.07744	0.323	10.29	0.1	0.0	2.18e-005	0.00e+000	2.18e-005
21	1	0.06711	0.343	8.92	2.1	0.0	1.26e-006	0.00e+000	1.26e-006
22	0.5	0.06155	0.354	8.18	14.5	0.0	1.86e-007	0.00e+000	1.86e-007
23	0.125	0.05056	0.376	6.72	21.5	20.9	1.29e-007	1.32e-007	1.31e-007

SUPPORTING INFORMATION

GENERAL NOTES

DESCRIPTION OF SYMBOLS AND ABBREVIATIONS

Green Era Biotechnology Plant ■ Chicago, Illinois

12/9/2017 ■ Terracon Project No. MR175403

Terracon GeoReport

SAMPLING

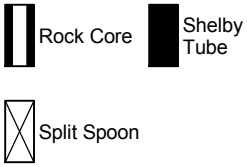

WATER LEVEL

Water Initially Encountered

Water Level After a Specified Period of Time

Water Level After a Specified Period of Time

Water levels indicated on the soil boring logs are the levels measured in the borehole at the times indicated. Groundwater level variations will occur over time. In low permeability soils, accurate determination of groundwater levels is not possible with short term water level observations.

FIELD TESTS

N	**Standard Penetration Test Resistance (Blows/Ft.)**
(HP)	**Hand Penetrometer**
(T)	**Torvane**
(DCP)	**Dynamic Cone Penetrometer**
UC	**Unconfined Compressive Strength**
(PID)	**Photo-Ionization Detector**
(OVA)	**Organic Vapor Analyzer**

DESCRIPTIVE SOIL CLASSIFICATION

Soil classification is based on the Unified Soil Classification System. Coarse Grained Soils have more than 50% of their dry weight retained on a #200 sieve; their principal descriptors are: boulders, cobbles, gravel or sand. Fine Grained Soils have less than 50% of their dry weight retained on a #200 sieve; they are principally described as clays if they are plastic, and silts if they are slightly plastic or non-plastic. Major constituents may be added as modifiers and minor constituents may be added according to the relative proportions based on grain size. In addition to gradation, coarse-grained soils are defined on the basis of their in-place relative density and fine-grained soils on the basis of their consistency.

LOCATION AND ELEVATION NOTES

Unless otherwise noted, Latitude and Longitude are approximately determined using a hand-held GPS device. The accuracy of such devices is variable. Surface elevation data annotated with +/- indicates that no ctual topographical survey was conducted to confirm the surface elevation. Instead, the surface elevation was approximately determined from topographic maps of the area.

STRENGTH TERMS

RELATIVE DENSITY OF COARSE-GRAINED SOILS

(More than 50% retained on No. 200 sieve.)
Density determined by Standard Penetration Resistance

Descriptive Term (Density)	Standard Penetration or N-Value Blows/Ft.
Very Loose	0 - 3
Loose	4 - 9
Medium Dense	10 - 29
Dense	30 - 50
Very Dense	> 50

CONSISTENCY OF FINE-GRAINED SOILS

(50% or more passing the No. 200 sieve.)
Consistency determined by laboratory shear strength testing, field visual-manual procedures or standard penetration resistance

Descriptive Term (Consistency)	Unconfined Compressive Strength Qu, (tsf)	Standard Penetration or N-Value Blows/Ft.
Very Soft	less than 0.25	0 - 1
Soft	0.25 to 0.50	2 - 4
Medium Stiff	0.50 to 1.00	4 - 8
Stiff	1.00 to 2.00	8 - 15
Very Stiff	2.00 to 4.00	15 - 30
Hard	> 4.00	> 30

RELATIVE PROPORTIONS OF SAND AND GRAVEL

Descriptive Term(s) of other constituents	Percent of Dry Weight
Trace	<15
With	15-29
Modifier	>30

RELATIVE PROPORTIONS OF FINES

Descriptive Term(s) of other constituents	Percent of Dry Weight
Trace	<5
With	5-12
Modifier	>12

GRAIN SIZE TERMINOLOGY

Major Component of Sample	Particle Size
Boulders	Over 12 in. (300 mm)
Cobbles	12 in. to 3 in. (300mm to 75mm)
Gravel	3 in. to #4 sieve (75mm to 4.75 mm)
Sand	#4 to #200 sieve (4.75mm to 0.075mm
Silt or Clay	Passing #200 sieve (0.075mm)

PLASTICITY DESCRIPTION

Term	Plasticity Index
Non-plastic	0
Low	1 - 10
Medium	11 - 30
High	> 30

UNIFIED SOIL CLASSIFICATION SYSTEM

Green Era Biotechnology Plant ■ Chicago, Illinois

October 22, 2018 ■ Terracon Pro ect No. MR175403R1

Terracon GeoReport

Criteria for Assigning Group Symbols and Group Names Using Laboratory Tests [A]					Soil Classification	
					Group Symbol	Group Name [B]
Coarse-Grained Soils: More than 50 retained on No. 200 sieve	**Gravels:** More than 50 of coarse fraction retained on No. 4 sieve	**Clean Gravels:** Less than 5 fines [C]	Cu ≥ 4 and 1 ≤ Cc ≤ 3 [E]		GW	Well-graded gravel [F]
			Cu < 4 and/or 1 > Cc > 3 [E]		GP	Poorly graded gravel [F]
		Gravels with Fines: More than 12 fines [C]	Fines classify as ML or MH		GM	Silty gravel [F,G,H]
			Fines classify as CL or CH		GC	Clayey gravel [F,G,H]
	Sands: 50 or more of coarse fraction passes No. 4 sieve	**Clean Sands:** Less than 5 fines [D]	Cu ≥ 6 and 1 ≤ Cc ≤ 3 [E]		SW	Well-graded sand [I]
			Cu < 6 and/or 1 > Cc > 3 [E]		SP	Poorly graded sand [I]
		Sands with Fines: More than 12 fines [D]	Fines classify as ML or MH		SM	Silty sand [G,H,I]
			Fines classify as CL or CH		SC	Clayey sand [G,H,I]
Fine-Grained Soils: 50 or more passes the No. 200 sieve	**Silts and Clays:** Li uid limit less than 50	**Inorganic:**	PI > 7 and plots on or above "A"		CL	Lean clay [K,L,M]
			PI < 4 or plots below "A" line [J]		ML	Silt [K,L,M]
		Organic:	Li uid limit - oven dried	< 0.75	OL	Organic clay [K,L,M,N]
			Li uid limit - not dried			Organic silt [K,L,M,O]
	Silts and Clays: Li uid limit 50 or more	**Inorganic:**	PI plots on or above "A" line		CH	Fat clay [K,L,M]
			PI plots below "A" line		MH	Elastic Silt [K,L,M]
		Organic:	Li uid limit - oven dried	< 0.75	OH	Organic clay [K,L,M,P]
			Li uid limit - not dried			Organic silt [K,L,M,Q]
Highly organic soils:	Primarily organic matter, dar in color, and organic odor				PT	Peat

[A] Based on the material passing the 3-inch (75-mm) sieve

[B] If field sample contained cobbles or boulders, or both, add "with cobbles or boulders, or both" to group name.

[C] Gravels with 5 to 12 fines re uire dual symbols: GW-GM well-graded gravel with silt, GW-GC well-graded gravel with clay, GP-GM poorly graded gravel with silt, GP-GC poorly graded gravel with clay.

[D] Sands with 5 to 12 fines re uire dual symbols: SW-SM well-graded sand with silt, SW-SC well-graded sand with clay, SP-SM poorly graded sand with silt, SP-SC poorly graded sand with clay

[E] $Cu = D_{60}/D_{10}$ $Cc = \frac{(D_{30})^2}{D_{10} \times D_{60}}$

[F] If soil contains ≥ 15% sand, add "with sand" to group name.

[G] If fines classify as CL-ML, use dual symbol GC-GM, or SC-SM.

[H] If fines are organic, add "with organic fines" to group name.

[I] If soil contains ≥ 15% gravel, add "with gravel" to group name.

[J] If Atterberg limits plot in shaded area, soil is a CL-ML, silty clay.

[K] If soil contains 15 to 29 plus No. 200, add "with sand" or "with gravel," whichever is predominant.

[L] If soil contains ≥ 30 plus No. 200 predominantly sand, add "sandy" to group name.

[M] If soil contains ≥ 30 plus No. 200, predominantly gravel, add "gravelly" to group name.

[N] PI ≥ 4 and plots on or above "A" line.

[O] PI < 4 or plots below "A" line.

[P] PI plots on or above "A" line.

[Q] PI plots below "A" line.

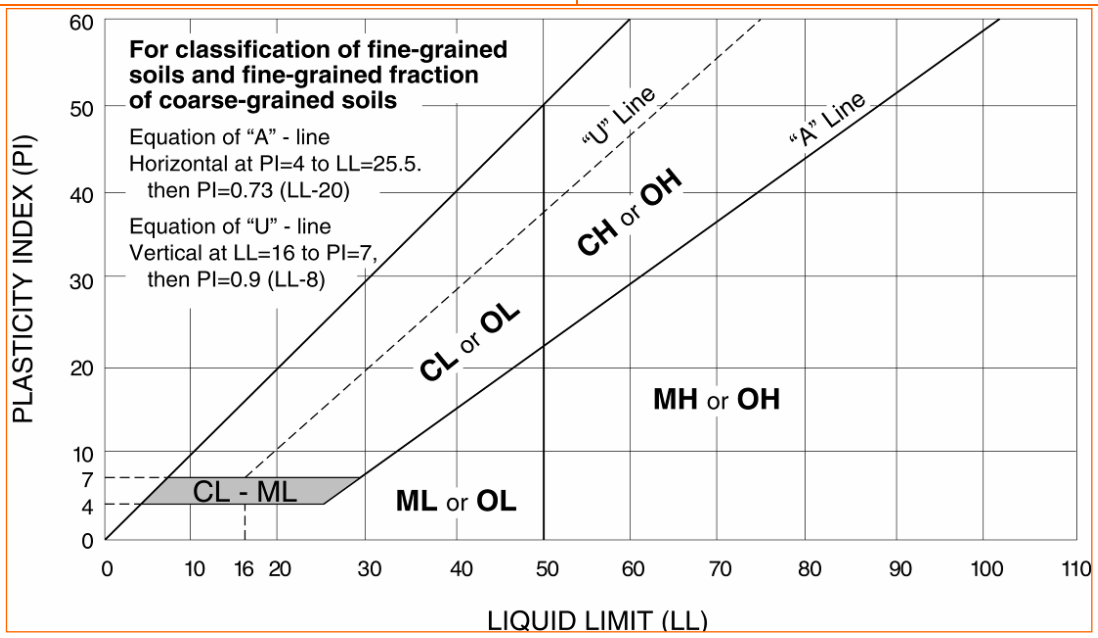

DESCRIPTION OF ROCK PROPERTIES

Green Era Biotechnology Plant ■ Chicago, Illinois

October 22, 2018 ■ Terracon Pro ect No. MR175403R1

WEATHERING	
Term	**Description**
Unweathered	No visible sign of roc material weathering, perhaps slight discoloration on ma or discontinuity surfaces.
Slightly Weathered	Discoloration indicates weathering of roc material and discontinuity surfaces. All the roc material may be discolored by weathering and may be somewhat wea er e ternally than in its fresh condition.
Moderately Weathered	Less than half of the roc material is decomposed and/or disintegrated to a soil. Fresh or discolored roc is present either as a continuous framewor or as corestones.
Highly Weathered	More than half of the roc material is decomposed and/or disintegrated to a soil. Fresh or discolored roc is present either as a discontinuous framewor or as corestones.
Completely Weathered	All roc material is decomposed and/or disintegrated to soil. The original mass structure is still largely intact.
Residual Soil	All roc material is converted to soil. The mass structure and material fabric are destroyed. There is a large change in volume, but the soil has not been significantly transported.

STRENGTH OR HARDNESS		
Description	**Field Identification**	**Uniaxial Compressive Strength, psi (MPa)**
Extremely Weak	Indented by thumbnail	40-150 (0.3-1)
Very Weak	Crumbles under firm blows with point of geological hammer, can be peeled by a poc et nife	150-700 (1-5)
Weak Rock	Can be peeled by a poc et nife with difficulty, shallow indentations made by firm blow with point of geological hammer	700-4,000 (5-30)
Medium Strong	Cannot be scraped or peeled with a poc et nife, specimen can be fractured with single firm blow of geological hammer	4,000-7,000 (30-50)
Strong Rock	Specimen re uires more than one blow of geological hammer to fracture it	7,000-15,000 (50-100)
Very Strong	Specimen re uires many blows of geological hammer to fracture it	15,000-36,000 (100-250)
Extremely Strong	Specimen can only be chipped with geological hammer	36,000 (250)

DISCONTINUITY DESCRIPTION			
Fracture Spacing (Joints, Faults, Other Fractures)		**Bedding Spacing (May Include Foliation or Banding)**	
Description	**Spacing**	**Description**	**Spacing**
Extremely Close	in (19 mm)	**Laminated**	in (12 mm)
Very Close	in – 2-1/2 in (19 - 60 mm)	**Very thin**	in – 2 in (12 – 50 mm)
Close	2-1/2 in – 8 in (60 – 200 mm)	**Thin**	2 in – 1 ft. (50 – 300 mm)
Moderate	8 in – 2 ft. (200 – 600 mm)	**Medium**	1 ft. – 3 ft. (300 – 900 mm)
Wide	2 ft. – 6 ft. (600 mm – 2.0 m)	**Thick**	3 ft. – 10 ft. (900 mm – 3 m)
Very Wide	6 ft. – 20 ft. (2.0 – 6 m)	**Massive**	10 ft. (3 m)

Discontinuity Orientation (Angle): Measure the angle of discontinuity relative to a plane perpendicular to the longitudinal a is of the core. (For most cases, the core a is is vertical therefore, the plane perpendicular to the core a is is hori ontal.) For e ample, a hori ontal bedding plane would have a 0-degree angle.

ROCK QUALITY DESIGNATION (RQD) [1]	
Description	**RQD Value (%)**
Very Poor	0 - 25
Poor	25 – 50
Fair	50 – 75
Good	75 – 90
Excellent	90 - 100

1. The combined length of all sound and intact core segments e ual to or greater than 4 inches in length, e pressed as a percentage of the total core run length.

Reference: U.S. Department of Transportation, Federal Highway Administration, Publication No FHWA-NHI-10-034, December 2009 Technical Manual for Design and Construction of Road Tunnels – Civil Elements

ATTACHMENT 15
SPCC PLAN

SPILL PREVENTION CONTROL AND COUNTERMEASURE PLAN
GREEN ERA RENEWABLE ENERGY & URBAN FARMING CAMPUS
650 WEST 83RD STREET
CHICAGO, ILLINOIS 60620-1937

February **, 2022

DAI Project # 7741

Prepared For:
Green Era 83rd Street, LLC
218 North Jefferson Street, Suite 300
Chicago, Illinois 60661-1307

Prepared By:
DAI Environmental, Inc.
27834 North Irma Lee Circle
Lake Forest, Illinois 60045-5130

DRAFT

SPILL PREVENTION CONTROL AND COUNTERMEASURE PLAN
FOR
Green Era Renewable Energy & Urban Farming Campus
650 West 83rd Street
Chicago, Illinois 60620

Original Date of Plan: February **, 2022
Date of Last Plan Amendment/P.E. Certification: N/A
Date of Current Plan Amendment/P.E. Certification: February**, 2022

Designated person accountable for spill prevention:
NAME TBD
Plant Manger

CERTIFICATION

I hereby certify that I (or my duly authorized representative) have examined the facility and attest that this Spill Prevention, Control, and Countermeasure (SPCC) Plan has been prepared in accordance with good engineering practices, including establishing procedures for required inspections and testing. The SPCC Plan and spill containment conform to all applicable regulations and will provide adequate protection for spills and slug loadings when used and maintained properly.

This certification in no way relieves the owner/operator of the duty to prepare and fully implement this SPCC Plan in accordance with the applicable requirements. This Plan is valid only to the extent that the facility owner or operator maintains, tests, and inspects equipment, containment, and other devices as prescribed in this Plan.

Professional Engineer Certification

Engineer: _____

Signature: _____

Registration Number: _____

Date: _____ SEAL

DRAFT

©2022, DAI Environmental, Inc.

SPILL PREVENTION CONTROL AND COUNTERMEASURE PLAN
MANAGEMENT APPROVAL & REVIEW PAGE

MANAGEMENT APPROVAL

Green Era 83rd Street, LLC is committed to the prevention of discharges to navigable waters and the environment. This Spill Prevention, Control, and Countermeasure Plan (SPCC) Plan will be appropriately implemented, including completing required inspections and testing, and performing regular review/update, as applicable.

Authorized Representative: Erika Allen Title: President

Signature: _____ Date: _____

MANAGEMENT REVIEW

A review and evaluation of this SPCC Plan is conducted periodically. If changes to the facility design, construction, operation, or maintenance occurs which materially affects the facility's potential for the discharge of into or upon the navigable waters of the United States or the stormwater sewer system, a recertification by a Professional Engineer will be conducted. Examples of such changes include increase/decrease in oil and/or hazardous material storage, addition/subtraction of secondary containment, and alteration of oil/hazardous material handling operations. Non-technical amendments (e.g. name/phone number changes or material storage changes where there is no increase/decrease) do not require the certification of a Professional Engineer.

DRAFT

©2022, DAI Environmental, Inc.

TABLE OF CONTENTS

LIST OF FIGURES ii

LIST OF APPENDICES ii

1.0 FACILITY OWNER and OPERATOR .....
- 1.1 Facility Owner, Address, and Telephone .....
- 1.2 Facility Operator, Address, and Telephone .....

2.0 DEFINITIONS AND REGULATORY CITATIONS .....
3.0 FACILITY INFORMATION .....
- 3.1 Facility Operations .....
- 3.2 Facility Storage .....
- 3.3 Discharge Prevention and Control Measures .....
- 3.4 Disposal of Recovered Product .....
- 3.5 Contact List .....

4.0 SPILL REPORTING AND RESPONSE .....
5.0 POTENTIAL SPILL SOURCES .....
- 5.1 Aboveground Storage Tanks and Associated Equipment .....
- 5.2 Other Potential Sources .....

6.0 PREVENTION MEASURES PROVIDED .....
- 6.1 Aboveground Storage Tanks and Associated Equipment .....
- 6.2 Other Potential Sources .....

7.0 IMPRACTICABILITY CONSIDERATIONS .....
8.0 INSPECTIONS/RECORD KEEPING .....
9.0 PERSONNEL TRAINING AND SPILL PREVENTION PROCEDURES .....
10.0 SITE SECURITY .....
11.0 TRUCK/RAIL LOADING RACKS .....
- 11.1 Drainage Control .....
- 11.2 Prevention of Spills Associated with Filling and Departure .....

12.0 REPAIR/ALTERATION OF FIELD CONSTRUCTED TANKS .....
13.0 OTHER DISCHARGE PREVENTION .....
14.0 QUALIFIED OIL FILLED EQUIPMENT .....
15.0 FACILITY DRAINAGE .....
- 15.1 Facility Drainage from Diked Areas .....
- 15.2 Facility Drainage from Undiked Areas .....
- 15.3 Facility Drainage Treatment .....

16.0 BULK STORAGE TANKS .....
- 16.1 Bulk Storage Container Construction .....
- 16.2 Bulk Storage Secondary Containment .....
- 16.3 Secondary Containment Drainage .....
- 16.4 Underground Storage Tanks .....
- 16.5 Aboveground Storage Tanks and Leak Prevention .....
- 16.6 Portable Storage Tanks .....

17.0 FACILITY TRANSFER OPERATIONS .....

DRAFT

©2022, DAI Environmental, Inc.

LIST OF FIGURES

Site Location Map ..... Figure 1
Aerial View of Site and Surrounding Property ..... Figure 2
Site Diagram and Drainage Detail ..... Figure 3
Site Detail Showing Process Operations and Equipment ..... Figure 3A

LIST OF APPENDICES

SOP-21-002 (SEWER SPILL PREVENTION AND REPORTING) ..... APPENDIX A
SOP-21-001 (SPILL RESPONSE PROCEDURES) ..... APPENDIX B
ILLINOIS SPILL NOTIFICATION FACT SHEET
AND DISCHARGE NOTIFICATION FORMS ..... APPENDIX C
SPILL EVALUATION ..... APPENDIX D
FACILITY INSPECTION FORMS ..... APPENDIX E
TRAINING AND TESTING LOGS ..... APPENDIX F

DRAFT

©2022, DAI Environmental, Inc.

1.0 FACILITY OWNER AND OPERATOR

1.1 Facility Owner, Address, and Telephone

Green Era 83rd Street, LLC
218 North Jefferson Street, Suite 300
Chicago, Illinois 60661-1307
Telephone: (708) 792-0649

1.2 Facility Operator, Address and Telephone

Green Era 83rd Street, LLC
218 North Jefferson Street, Suite 300
Chicago, Illinois 60661-1307
Contact: Erika Allen, President
Telephone: (708) 792-0649

Facility SIC Code:	4953
Facility NAICS Code:	562219
Latitude:	41° 44' 41.68" North
Longitude:	87° 38' 26.83" West
Location:	Township 38 North, Range 14 East, Section 33

2.0 DEFINITIONS AND REGULATORY CITATIONS

Under Article V, Section 4 of the Metropolitan Water Reclamation District of Greater Chicago (MWRD) *Sewage and Waste Control Ordinance*, "Each significant industrial user and each industrial user notified of applicability of this section…shall provide protection from accidental discharge to the sewerage system…each such industrial user must have detailed plans on file at the District showing facilities and operating procedures to provide this protection. Plans shall contain all elements required under 40 CFR 403.8(f)(2)(vi), which are:

> ***(A)*** *Description of discharge practices, including non-routine batch Discharges;*
>
> ***(B)*** *Description of stored chemicals;*
>
> ***(C)*** *Procedures for immediately notifying the POTW of Slug Discharges, including any Discharge that would violate a prohibition under § 403.5(b) with procedures for follow-up written notification within five days;*
>
> ***(D)*** *If necessary, procedures to prevent adverse impact from accidental spills, including inspection and maintenance of storage areas, handling and transfer of materials, loading and unloading operations, control of plant site run-off, worker training, building of containment structures or equipment, measures for containing toxic organic pollutants (including solvents), and/or measures and equipment for emergency response;*

©2022, DAI Environmental, Inc.

Additionally, the MWRD has published an "Elements of a Slug Control Plan" document on their website that provides further guidance as to the required or recommended contents of a Slug Control Plan. These include:

B. Equipment to Contain Spills - Drainage and Secondary Containment (Absolute Requirements)

1. No floor drains or other direct bypass to the sewer system may exist in wet manufacturing areas, wastewater pretreatment areas, or raw chemical/sludge storage areas which in the event of run-off spillage would result in a violation of any criteria of the Sewage and Waste Control Ordinance.

2. Under those situations when floor drains are required by specific building codes or when the elimination of floor drains is not feasible, a detailed explanation of the prohibitive factors along with an acceptable alternative plan to prevent run-off spillage from entering the sewer system must be provided.

3. Adequate secondary containment, such as but not limited to impervious diking, must be provided for all manufacturing, pretreatment operations and raw chemical/sludge storage areas identified by Item No. IV, B, 1.

4. Impervious flooring with no direct drainage to the sewer system must be provided for all secondary containment areas.

5. A minimum secondary containment capacity of 100% of the volume of the largest above ground process tank located in wet manufacturing areas which, in the event of run-off spillage, would result in a violation of any criteria of the Sewage and Waste Control Ordinance must be provided.

6. A minimum secondary containment capacity of 100% of the volume of the largest above ground wastewater pretreatment system process tank which, in the event of run-off spillage, would result in a violation of any criteria of the Sewage and Waste Control Ordinance must be provided.

7. A minimum secondary containment capacity of 100% of the maximum volume of each of the following: (a) stored chemicals, (b) production residues, (c) pretreatment sludge must be provided. Outside storage facilities must be covered to prevent stormwater from entering secondary containment areas.

8. Supporting documentation pursuant to Item Nos. IV, B, 1 through 7 must be submitted. Said documentation must include written narratives, sketches, and engineering computations on tank sizing, worst-case scenario spill volumes and secondary containment capacities. Further, said documentation must be prepared by a professional engineer registered in the state of Illinois and must certify that the design and capacities of the secondary containment facilities will satisfy District requirements and provide adequate protection to prevent run-off spillage from entering the sewer system or waters under the jurisdiction of the District.

As per the MWRD's Sewage and Waste Control Ordinance, "Plans shall be certified by a Registered Professional Engineer licensed by the state of Illinois." This plan is referred to as a Slug Control Plan (SCP), and the information required by MWRD in a SCP is effectively identical to the information to be included in a typical Spill Prevention Control and Countermeasure (SPCC) Plan as per USEPA regulations (where applicable).

DRAFT

©2022, DAI Environmental, Inc.

Additionally, the Chicago Liquid Waste Handling Facility regulations, which are also applicable to the facility, require an SPCC Plan as per the following:

8.5.11. Spill Prevention and Control. [Section 11-4-1520(B)(4)] The operating plan shall include a Spill Prevention and Control Plan. This plan shall include, but not be limited to:

8.5.11.1. Descriptions of the measures taken to prevent spills occurring at tanks, piping, pits, and treatment devices. This description shall include a schedule of routine inspections for leaks and spills.

8.5.11.2. Descriptions of the measures taken to control a spill should one occur.

8.5.11.3. A listing of the materials and equipment available on-site for use in controlling spills should one occur, including the location of the equipment within the facility.

8.5.11.4. Descriptions of the procedures used to document and report the spill to the Department of Environment and other agencies.

8.5.115. Descriptions of emergency procedures and evacuation plans for use in the event of an uncontrollable spill.

8.5.11.6. A listing of all safety equipment available at the facility, including the location of the equipment within the facility.

Given that secondary containment is a standard component of an SPCC plan, the Chicago Liquid Waste Handling facility rules regarding secondary containment are relevant to the SPCC plan, and are as follows:

8.4.22. Secondary Containment. [Section 11-4-1520(B)(5)] The design report shall contain sufficient documentation that secondary containment exists for all tanks, drum storage areas, tanker truck loading/unloading areas, liquid transfer points, pits, lagoons, impoundments, and similar liquid waste handling devices or storage systems or devices, and as necessary and appropriate, pumps and piping systems.

11.8. Secondary Containment. Secondary Containment volume shall be equivalent to the volume of the largest tank plus precipitation from a 25 year, 24 hour rainfall event. The secondary containment installations shall allow for the complete removal of any spilled waste or other materials.

This SPCC Plan has been developed to address the specified MWRD and City of Chicago requirements for an SCP.

DRAFT

©2022, DAI Environmental, Inc.

3.0 FACILITY INFORMATION

3.1 Facility Operations

The property addressed as 650 West 83rd Street in Chicago and owned by Green Era Educational NFP is being developed into a food waste (solid and liquid) recycling (composting) facility (Green Era Renewable Energy and Urban Farming Campus). See Figure 1 for a topographical Site Location Map. The facility and associated equipment will be owned and operated by Green Era 83rd Street, LLC. The facility will be a food waste recycling facility developed to create commercial compost and biomethane for injection into the local natural gas utility system. Two (2) forms of food-based waste are to be received: solid food waste and pumpable liquid commercial food waste. Solid food waste includes food waste from food processors (dairies, bakeries, potato chip plants, etc.), grocery stores, and restaurants, as well as bagged kitchen waste from neighborhood curbside collection programs and other packaged food waste (e.g., beverages or soup in cans, milk or juices in plastic jugs, bottles, or cartons, and single serving condiment packs). Pumpable commercial food waste includes whey, liquid ice cream mix, end of batch soups, and sauces and syrups. Fats, oils, and greases (FOG) collected from grease traps at restaurants and food processors will also be accepted. Wash waters from food product tanker trucks and food product railcars will also be accepted by the facility. After being separated and pulverized during pre-digestion processing steps, solid food waste will be mixed with liquid food waste to generate a slurry, which is then pumped into the Biomass Equalization tank where the preliminary steps of anaerobic digestion process initiate.

The facility is being built in the Auburn Park neighborhood of Chicago within an industrial area bound by residential neighborhoods. The facility is bound by Aabbitt Adhesives, then a ComEd substation to the north; by South Wallace Street, then Diamond Waste Recycling or a vacant lot used for truck parking to the east: by West 83rd Street, then a church or Mahalia Jackson Park to the south; and by Metra railroad tracks, then a residential neighborhood to the west. Figure 2 is an aerial view of the development property and surrounding area.

Physically, the nearest surface water to the facility is the Auburn Park Lagoon, located approximately 2,305-ft to the north-northeast. The nearest significant body of surface water is over

©2022, DAI Environmental, Inc.

4-miles southeast of the facility through heavily developed urban landscape. Based upon the distance to surface water and the highly urban development, it is not reasonable to expect that spills from the facility could directly impact the nearest surface waters by overland flow. Rather, the potential impacts to surface waters from the facility would be by a release into the City of Chicago stormwater sewer systems, which ultimately discharges to the MWRD combined sewer system. The combined sewer system in the area of the facility flows to the MWRD Stickney Water Reclamation Plant (WRP), which discharges treated wastewater into the Chicago Sanitary and Ship Canal (CSSC), a man-made waterway that eventually discharges to the Des Plaines River. The Stickney WRP is located practically adjacent to the CSSC at approximately mile marker 316 (shortly downstream of the South Central Avenue bridge). Under a worst case discharge evaluation that assumes a release to the sewer system and a failure to capture the release in the sewers and/or at the Stickney WRP, a discharge from the facility could result in a discharge to navigable waters.

The approximately 8.905-acre property is a mixture of asphalt paved driveways/parking, buildings, and non-hardscape surface. Buildings on-site include the 35,000-ft^2 Processing Building, 5,600-ft^2 Compost Loading and Handling Building (Pole Barn), and approximately four (4) "hoop houses" (i.e., simple greenhouse structures) that will be used to perform indoor urban farming within the "Urban Agriculture Area." Areas without hardscape include the stormwater detention pond, the "Urban Agriculture Area," the community garden center, and various areas of general landscaping. Figure 3 provides a Site Plan with the drainage detail.

Solid food waste will arrive via compactors, roll-off boxes, and dump or walking floor trailers. Packaged food products will be delivered in box truck. Tanker trucks will deliver pumpable food wastes. All transfer operations will be conducted inside the Processing Building, with the exception of palletized packaged food deliveries occurring at the single truck dock at the northeast end of the building. Liquid food waste is initially transferred into two (2) sub-grade concrete holding tanks (tanks fully encased in concrete and located in the building lower level) before being mixed with pulverized solid food waste and ultimately transferred to the first of two (2) aboveground storage tanks (ASTs) located outside to the north of the Processing Building. Finished product commercial compost will be shipped off-site via trailer truck or utilized on-site

©2022, DAI Environmental, Inc.

in the urban farming area. Biomethane, a by-product of the anaerobic digestion process, will be distributed into the natural gas utility pipeline as a finished product.

In addition to the raw ingredient and finished products transferred and stored in association with the anaerobic digestion process, the facility will receive and store small quantities of various petroleum oils and chemicals. Oil (various) will be maintained in small volume (5-gallon pales) inside the Processing Building for subsequent use in processing equipment. Undiluted polymer (non-hazardous) will be received as a liquid emulsion (mineral oil) in 275-gallon totes and subsequently diluted in an AST for use in enhancing flocculation prior to the dewatering process. Ethylene glycol (glycol) will be used for a non-contact heat transfer liquid. Undiluted glycol totes will also be stored inside the Processing Building. Two (2) tanks service the heat exchange system with diluted (mixed with water) glycol. Figure 3A shows the locations of the tote storage and the polymer and glycol process tanks.

Three (3) additional sub-grade concrete tanks located in the lower level of the Processing Building were installed during building construction, tanks T-210A (14,000-gallons), T-210C (14,000-gallons), and T-251 (30,000-gallons). Tank T210-A is intended for the future storage of undiluted polymer, while the future use of the other two (2) tanks is to be determined based upon operational needs. Figure 3A shows the locations of these empty (i.e., currently non-regulated) tanks.

Other chemical storage on-site will include household cleaning supplies, paint products, and/or fuel in small volume containers (5-gallons or less) inside flammables cabinets within the maintenance area inside the Processing Building.

Municipal water intake will be utilized for domestic use (i.e., sinks, toilets, etc.), polymer makeup (for improved solids removal during post-digestion dewatering), and equipment/facility wash water. Four (4) operations conducted by the facility will account for the equipment/facility wash water generation:

- Dewatering belt press clean rinsing (post-digestion), the primary source of wastewater discharge from the facility;

DRAFT

©2022, DAI Environmental, Inc.

- Wash down following unloading of food waste containers, and exteriors of trucks, and tankers;
- Rinsing of separated grit prior to transfer to garbage compactors (pre-digestion, thus conveyed to digester, not to discharge); and
- General housekeeping.

All City of Chicago water intake will discharge to the MWRD. Average discharge volume to the MWRD is expected to be 60,385-gallons/day. The excess volume (beyond the intake water) is the result of the imported liquid food waste, with the wastewater ultimately generated by the belt press dewatering step and stored in two (2) sub-grade concrete holding tanks prior to batch discharge via Outfall 1A under MWRD Discharge Authorization. The wastewater generated at the facility will be discharged to the MWRD without any pretreatment; the facility is not a categorical pretreatment facility.

Between two (2) and seven (7) personnel are expected to control operations at the facility. Operations will be controlled from the small office area inside the approximate middle of the Processing Building. Typical operations (i.e., when food waste is imported and preliminarily processed) will be from 7:00-17:00, Monday-Saturday. It is possible the facility may periodically operate on Sundays. However, the facility will be continuously monitored, with anaerobic digestion operations occurring 24-hrs/day, 7-days/wk.

3.2 Facility Storage

Oil Storage

The facility will maintain limited storage of various oils, including both petroleum and the polymer/mineral oil emulsion. Motor oil, hydraulic oil, and gear box oil (both new and used) on-site on the main floor of the southwestern portion of the Processing Building. Oil storage is maintained for equipment maintenance and is generally limited to 5-gallon buckets. Used oil generated during equipment maintenance will be placed into one (1) 55-gallon drum pending off-site shipment for disposal. The used oil drum will be maintained in the same area.

In addition to the small volume petroleum oil, polymer emulsion will be delivered in concentrated form in 275-gallon totes that will be maintained within the dewatering area of the Processing

©2022, DAI Environmental, Inc.

Building. Initial polymer storage is expected to be limited to a single 275-gallon tote until full-scale operations are achieved. (Sub-grade concrete tank T-210A is anticipated to be utilized for future storage of undiluted polymer.) The concentrated emulsion will be diluted with water in a 2,000-gallon AST (T-210B) located on the main floor of the Processing Building.

Oil-filled equipment will also be located on-site. Two (2) pad-mounted transformers owned by ComEd containing mineral oil in volumes of ***-gallons to ***-gallons are located outside the northwest wall of the Processing Building and near the northern property boundary in same location as the gas upgrading equipment. (A pad is available for the installation of a third transform adjacent to the unit outside the northwest wall of the Processing Building.) Process equipment located inside of the Processing Building that will be utilized to handle the solid food waste as part of the pre-digestion steps is oil-filled, but with volume below the 55-gallon threshold.

Tank T-210B is primarily water and is therefore is not being considered as storing an oil. Therefore, the combined aboveground oil storage capacity will remain well below the 1,320-gallons threshold that triggers USEPA SPCC regulations (40 CFR 112). See Figures 3-3A for locations of oil storage.

Chemical Storage

Most chemical storage will be non-hazardous or unregulated small volume. The only hazardous liquid storage on-site relates to ethylene glycol to be used in the heat exchanger system. Storage is generally limited to no more than two (2) 275-gallon totes. Tote storage of undiluted ethylene glycol will be located on the main floor of the southern portion of the Processing Building. Additionally, two (2) tanks will be connected to the heat exchanger system, the 55-gallon diluted glycol tank (T-400A) and the 238-gallon expansion tank (T-400B). (The total system volume including piping has been calculated at 2,000-gallons.) Both tanks will be located in the boiler room on the main floor of the Processing Building. Spent glycol removed from the equipment will be placed into a 55-gallon drum pending off-site shipment for disposal. Total aboveground hazardous chemical storage capacity will be 898-gallons, including the two (2) tanks, two (2) 275-gallon totes, and a 55-gallon drum of ethylene glycol. The total glycol volume on-site including

DRAFT

©2022, DAI Environmental, Inc.

what is stored and what is flowing through the system would be 2,605-gallons. Non-hazardous chemical storage is excluded. See Figure 3A for storage locations.

Liquid Waste Storage

In addition to oil and hazardous chemical storage on-site that is regulated by MWRD, this SPCC Plan covers "liquid waste" storage as regulated by the City of Chicago Liquid Waste facility requirements. Eight (8) tanks will be utilized across the various steps of the food waste composting process as described below.

Liquid food waste, FOGs, and rinses water that will be accepted by the facility will be transferred into two (2) 30,000-gallon concrete holding tanks (T-050A and T-050B) located in the lower level of the Processing Building. From the holding tanks, the liquid food waste will be blended with pulverized solid food waste in the separation mill to create a slurry that is then transferred into the slope-bottom grit hopper with 5,500-gallon holding tank (T-065A). After allowing for the removal of grit, the slurry will be transferred to the 320,000-gallon Biomass Equalization Tank (T-100). Hydrolysis and acidification (initial steps of the anaerobic digestion process) begin in the Biomass Equalization Tank, breaking down the complex carbon chains into simple acids (e.g., acetic acid, butyric acid, and propionic acid). The anaerobic digestion process is then completed in the 1,680,000-gallon Digester Tank (T-105), altering the food waste slurry into a high-strength wastewater (referred to as digestate).

From the Digester Tank, the digestate is transferred to a 30,000-gallon sub-grade concrete holding tank (T-205) located inside the lower level of the Processing Building prior to entering the dewatering step. The dewatering step generates the finished product commercial compost and wastewater (referred to as filtrate). Filtrate is temporarily stored in two (2) 30,000-gallon sub-grade concrete holding tanks (T-250A and T-250B) for equalization, pending discharge to the MWRD. The characteristics of the digestate and the filtrate are summarized below:

DRAFT

©2022, DAI Environmental, Inc.

		Digestate	Press Filtrate
Nominal Flowrate[1]	GPD_7	51,667	55,024
pH	SU	7.8 - 8.5	7.8 - 8.5
BOD (50% of COD)	mg/l		1,500 - 3,750
	lbs/day		688 - 1,721
COD	mg/l	30,000 - 55,000	3,000 - 7,500
	lbs/day	12,930 - 23,704	1,377 - 3,442
TKN	mg/l	3,000 - 6,000	2,000 - 5,000
	lbs/day	1,293 - 2,585	918 - 2,295
N as NH3	mg/l	2,000 - 4,000	1,500-3,500
	lbs/day	862 - 1,724	688 - 1,606
TP	mg/l	600 - 1,000	40 - 200
	lbs/day	259 - 431	18 - 92
TSS	mg/l	30,000 - 45,000	200 - 2,000
	lbs/day	12,930 - 19,395	92- 918
TDS	mg/l	2,000 - 10,000	2,000 - 10,000
	lbs/day	862 - 4,310	918 - 4,589
Alkalinity (4.6)	mg/l		3,000 - 8,000
	lbs/day		1,377 - 3,671

1. Flowrate stated for 7-day average volume when processing an average of 50,000 TPY SSO and 26,750 TPY FOG.

In summary, two (2) sub-grade tanks in the building will be used for liquid food waste storage (60,000-gallons); two (2) ASTs will be used for blended slurry food waste storage (total of 325,500-gallons via one (1) 5,500-gallon grit hopper and one (1) 320,000-gallons Biomass Equalization AST); two (2) tanks will store digestate (total of 1,710,000-gallons via one (1) 1,680,000-gallons in the digester AST and 30,000-gallons in a sub-grade tank in building), and two (2) sub-grade tanks in the building will storage filtrate (30,000 + 30,000-gallons). Total aboveground liquid waste storage in the eight (8) tanks is 2,155,500-gallons. See Figures 3-3A for locations of the liquid waste tanks.

3.3 Discharge Prevention and Control Measures

The facility will be observed daily during operations, with personnel present 24-hrs/day, 7-days/wk. Consistent with the requirements of the City of Chicago Liquid Waste regulations, formal facility inspections will be conducted daily in order to detect any abnormalities that may cause a problem. Records of these inspections will be documented and signed by the inspector. All drips and/or staining will be promptly reported so that arrangements can be made to have proper maintenance performed.

©2022, DAI Environmental, Inc.

All liquid food waste will be received by the facility via tanker trucks (up to approximately 5,500-gallons capacity) for subsequent gravity distribution into the sub-grade holding tanks T-050A and T-050B. All subsequent liquid transfers will be via pump and piping. Tanker truck transfer operations to the holding tanks will be conducted inside the northern portion of the Processing Building and will be overseen by facility personnel. During transfer activities, drivers and facility personnel will take all necessary precautions to prevent a release. Established procedures will be strictly adhered to during transfers. In the event of a release, trench drains in the floor of the building within the tanker truck transfer station flow to sump pits, which subsequently drain to the liquid receiving tanks via sump pump. Even if the immediate trench drains are overwhelmed, any liquid release would flow into the lower level of the building and be recovered in the lower level trench drains and sump pits. The entire main floor and lower level of the Processing Building are concrete. All liquids removed from the sump pits will be transferred into the two (2) liquid food waste receiving tanks. In the event of a release, facility personnel will respond with applicable spill equipment, which will generally consist of simple tools (e.g., shovels, brooms, etc.) and water. There is no threat of a release inside the building of reaching the sewer system. For quick access, spill materials, including a 95-gallon spill kit, sorbent pads, and oil-dry will be located in the maintenance area.

Totes of chemical will be delivered to the facility on an as needed basis. Facility personnel will manually transfer oil from buckets to equipment during maintenance operations. The heat exchanger system will be replenished with glycol when necessary. Used oil and spent glycol removed from the equipment will be placed into a 55-gallon drum pending off-site shipment for disposal. All transfers will be conducted indoors by appropriately trained personnel. The oil and glycol drums will be stored inside the southwestern portion of the Processing Building pending removal by the facility's waste handler.

All liquid storage tanks at the facility will be single-walled, constructed of carbon steel or concrete. All tanks will be equipped with automatic gauging system. The tanks will be continually monitored by the SCADA (supervisory control and data acquisition) system with automatic signal processing and alarming. Additionally, the large-volume ASTs have been designed with overflow piping that

©2022, DAI Environmental, Inc.

connects to a 3,000-gallon underground sump pit. Daily visual observations of tanks and the facility will be performed in order to detect any abnormalities that may cause a problem.

Solid material transfers will also occur on-site, specifically food waste import, non-digestible material transfer from equipment to compactor boxes, and transfer of finished product compost from the dewatering belt press to trucks. Most of these transfers will be completed via auger or belt conveyor systems. Solid food waste will be generally tipped directly into the live-bottom receiving bunker. Occasionally materials will be staged on the main floor of the building pending subsequent transfer into the receiving bunker, only expected during peak import operations.

There have been no reportable spills at this facility as operations have not yet begun. Minor surficial releases in amounts less than reportable quantities are anticipated to occur periodically and will be immediately cleaned up by on-site personnel using spill supplies. Detailed controls and countermeasures are discussed throughout this SPCC Plan. Appropriate reporting and response measures are detailed within this SPCC Plan to address a slug discharge, should one occur.

3.4 Disposal of Recovered Product

In the event that a release of product occurs at this facility, Green Era will attempt to contain and recover as much of the spilled material as possible. When appropriate, materials will be stockpiled temporarily on-site profiling and disposal acceptance is obtained. If possible, collected material will be returned to the tank system for anaerobic digestion. When the material is considered a waste, transportation of the materials will be carried out using a licensed waste hauler and be disposed of at an approved location that is properly registered and permitted according to all local, state, and federal regulations. All applicable laws, rules, and regulations in disposing of the recovered product, cleanup materials, and contaminated soil will be followed.

DRAFT

©2022, DAI Environmental, Inc.

3.5 Contact List

Name	Title	Telephone
Federal Number		
National Response Center		(800) 424-8802
USEPA Region 5		(312) 353-2318
State Notification Number		
Illinois Emergency Management Agency (State Emergency Response Commission)		(800) 782-7860
Illinois Environmental Protection Agency Office of Emergency Response		(217) 782-3637
Illinois Environmental Protection Agency Des Plaines Field Office		(847) 294-4400
Local Notification Number		
Chicago Office of Emergency Management and Communications (Local Emergency Planning Commission)		(312) 746-6430
Metropolitan Water Reclamation District (MWRD) (For a release into the sewer system)		(312) 787-3575 (24-hr) (312) 751-3044 (daytime)

Name	Title	Telephone
Chicago Fire Department/Police Department		911
Green Era		
NAME TBD	Plant Manager	(708) 792-0649 (###) ###-#### (24-hr)
NAME TBD	Plant Engineer	(708) 792-0649 (###) ###-#### (24-hr)
Green Era (Administrative)		
Erika Allen	President	(###) ###-#### (24-hr)
Jason Feldman	Director	(###) ###-#### (24-hr)
Spill Response Organization		
SET Environmental, Inc.		(877) 437-7455 (24-hr)
Environmental Consultant		
Richard J. Vamos, DAI Environmental, Inc.		(847) 343-4257 (cell)

DRAFT

©2022, DAI Environmental, Inc.

4.0 SPILL REPORTING AND RESPONSE

The Green Era facility does not store greater than 1,000,000-gallons of oil or extremely hazardous substances in excess of a threshold planning quantity such that the completion of a Facility Response Plan (40 CFR 112.20) or an Emergency Response Plan is required. In general, in the event of a release, personnel are instructed to shut-off the source of the spill, if possible, and use spill control equipment to contain the release as best as possible. Spill supplies including a 95-gallon spill kit, sorbent pads, and oil-dry will be located in the maintenance area. Visible discharges are promptly addressed and are removed as soon as possible. If necessary, an outside contractor will be called in to assist in cleanup and disposal of waste materials. Appendix A provides SOP-21-001: *Spill Contingency Plan* with spill response and reporting procedures. Appendix B provides SOP-21-002: *Standard Operating Procedure Sewer Spill Prevention and Reporting*, which includes established procedures to be followed in the event of a release to the MWRD sewer system (the SOP together with the SPCC address the SCP requirements).

As soon as safe and possible, personnel must perform the required notifications. The Plant Manager (or appropriately qualified alternate contact) is to be notified of a measurable spill as soon as possible. A listing of emergency contact numbers is included previously in Section 3.5. Illinois reporting requirements are included in Appendix C. An example discharge notification form is also included in Appendix C. The form includes all information required while notifying the designated authority of a reportable release. Tables of quantities for reportable releases are provided in 40 CFR 117.3 and 40 CFR 302.4. Minimum quantities for mandatory reporting of spills have been established by the State of Illinois as detailed on the spill reporting guidance obtained from the Illinois Emergency Management Agency and included in Appendix C. Petroleum spills in excess of 25-gallons or any volume of oil or hazardous liquid that may potentially impact waters of the state (either surface water or groundwater), must be reported. Any discharge of oil or hazardous material into the sewer system must be reported to MWRD within 24-hrs and followed up with a written description of the incident within 5-days of the incident.

In the event that the facility has discharged more than 1,000-gallons of oil in a single discharge or more than 42-gallons of oil in each of two (2) discharges within any 12-month period, submit the

©2022, DAI Environmental, Inc.

following information to the USEPA Regional Administrator within 60-days from the date of discharge: 1) name of the facility; 2) your name; 3) location of the facility; 4) maximum storage/handling capacity of the facility and normal daily throughput; 5) corrective actions/countermeasures taken, including a description of equipment repairs and replacements; 6) adequate description of the facility, including maps, flow diagrams, and topographical maps, as necessary; 7) cause of such discharge, including a failure analysis of the system or subsystem in which the failure occurred; 8) additional preventive measures taken or contemplated to minimize the possibility of recurrence; and 9) other information as the USEPA Regional Administrator may reasonably require pertinent to the SPCC or discharge. A form included in Appendix C provides a template for submitting this information.

5.0 POTENTIAL SPILL SOURCES

5.1 Aboveground Storage Tanks and Associated Equipment/Material

Below is a listing of all facility bulk storage tanks, capacity and contents, direction of flow, and form of spill containment.

Chemical

Tank #	Material Stored	Volume (Gallons)	Flow Direction	Containment
T-400A	Ethylene glycol	55	Spread laterally within Processing Building boiler room	
T-400B	Ethylene glycol	238		

Subtotal (chemical): 288-gallons

DRAFT

©2022, DAI Environmental, Inc.

Liquid Waste

Tank #	Material Stored	Volume (Gallons)	Flow Direction	Containment
T-050A	Liquid food waste/FOG/ rinse water	30,000	Spread laterally within Processing Building lower level	Inside Processing Building lower level with full concrete walls and floor
T-050B	Liquid food waste/FOG/ rinse water	30,000		
T-065A	Food waste slurry	5,500		
T-100	Food waste slurry	320,000	Spread laterally overland (N, E, and S) and with engineered flow towards sewers that drain into the stormwater detention pond	Stormwater detention pond (partial only) and prompt spill response
T-105	Digestate (Wastewater)	1,680,000		
T-205	Digestate (Wastewater)	30,000	Spread laterally within Processing Building lower level	Inside Processing Building lower level with full concrete walls and floor
T-250A	Filtrate (Wastewater)	30,000		
T-250B	Filtrate (Wastewaster)	30,000		

Subtotal (food waste): 385,500-gallons
Subtotal (wastewater): 1,770,000-gallons

Non-regulated/Empty

Tank #	Material Stored	Volume (Gallons)	Flow Direction	Containment
T-210A	Empty	14,000	Not Applicable	Inside Processing Building lower level with full concrete walls and floor
T-210B	Water (with diluted polymer)	2,000	Spread laterally within Processing Building towards trench drain	
T-210C	Empty	14,000	Not Applicable	
T-251	Empty	30,000		

Total (non-regulated): 2,000-gallons
Total (empty): 58,000-gallons

The ASTs at the facility will be compatible with contents: liquid food waste, digestate or filtrate (wastewater), and ethylene glycol. Tanks will have overfill protection via automatic gauging system. Additionally, the large-volume ASTs have been designed with overflow piping that connects to a 3,000-gallon underground sump pit. Potential sources of spills from these storage tanks include leaks from holes or deterioration, tank overfill, and complete tank failure and rupture. In the event of a catastrophic failure, most tanks are located inside of the Processing Building, either in the full concrete wall and floor lower level (6), or in the concrete slab floor and walls boiler room (2). Spills would spread laterally across the concrete floor of the building, likely dropping into trench drains that flow into concrete sump pits. No open floor drains are located in

©2022, DAI Environmental, Inc.

the building that directly connect to the sanitary sewer. Spills from the two (2) outside tanks will flow laterally overland with engineered grading of the facility, with spills directed toward on-site catch basins that drain to the stormwater detention pond located at the southeast corner of the facility. A portion of the release volume would be expected to infiltrate into surrounding unpaved ground. Any overland flow not captured by on-site sewers would be expected to flow north and easterly based upon the surface grading.

In addition to the ASTs, the valves, pumps, and pipes utilized for product transfer pose a potential spill source. Pumps and pipes will be used to move product to and from storage tanks. Potential sources of spills from this equipment include leaks (primarily at connection points and seals), spillage from connections, and pipes bursting. Negligence during transfer operations also represents a potential for incident. Flow direction in the event of a spill will be laterally within the building (indoor piping) or consistent with the engineered drainage towards on-site storm sewers (outdoor piping).

5.2 Other Potential Sources

There are other potential spill sources on-site. Tanker truck transfer of liquid food waste into the receiving tanks will occur within the northern portion of the Processing Building. Negligence or undetected leaks may cause a release during transfer operations. Potential sources of spills include drips from pipe/hose connection points or rupture. Additionally, tanker trucks pose a threat of release via leak or rupture. In the event of a spill occurring at tanker truck transfer area, liquid food waste would spread laterally across the concrete floor of the building towards trench drains and/or into the lower level of the Processing Building.

There are two (2) oil-filled transformers located outside the west wall of the Processing Building (1) and along the northern boundary of the facility (1). The pad-mounted transformers are owned by the electrical utility. Lack of attention and proper maintenance of this oil-filled equipment could result in a release. The direction of flow for the transformers depends on the location, but will general be laterally on-site and with limited spread.

DRAFT

©2022, DAI Environmental, Inc.

Finally, totes, drums, and small volume containers of oil, polymer/mineral oil emulsion, and chemicals will be located inside the Processing Building. Spills or leaks may occur as a result of damage, deterioration, or vandalism, although the volume of a release would be less than an AST release. A spill would spread laterally across the concrete floor of the building, likely dropping into trench drains that flow into concrete sump pits or into the building lower level. No open floor drains are located in the building that directly connect to the sanitary sewer.

6.0 PREVENTION MEASURES PROVIDED

6.1 Aboveground Storage Tanks and Associated Equipment

To meet the requirements for secondary containment, most storage tanks at the facility are located inside of the Processing Building. The building has a lower level with cast-in-place concrete walls and floor. The main floor of the building is concrete slab and building walls are pre-cast concrete construction. Most pumps, piping, and other appurtenances will also be located inside. For small spills and leaks, emergency spill supplies will be located in the maintenance area. In the event of a large release, the facility's emergency response contractor will be called upon to assist in the cleanup and recovery operations.

There is no form of designed secondary containment constructed around the two (2) tanks that are located outside of the building, though the adjacent elevated railway will prevent a westerly flow direction. Spatial constraints of the facility prevent the capability of constructing a sized dike around the tanks. The on-site stormwater detention basin at the southeast corner of the facility with 659,647-gallons capacity would be expected to collect and temporarily store at least some portion of the spilled volume from the outdoor tanks. The detention basin does have sufficient capacity to be used as full secondary containment for 320,000-gallon Biomass Equalization Tank with sufficient additional volume to account for the 25-yr, 24-hr storm (5.7-in), but the detention basin capacity is not sufficient to be considered full secondary containment for the 1,680,000-gallon Digester Tank. While the grading of the facility generally directs flow towards the stormwater catch basins that connect to the on-site stormwater sewer system which directs flow into the detention basin, overland flow to the north and east is to be expected in the event of a catastrophic release. All released liquid is not likely to be captured by on-site sewers and directed to the

DRAFT

©2022, DAI Environmental, Inc.

stormwater pond. Because of this expectation, a spill evaluation based upon a worst case release scenario that provides the expected extent of impact and general response actions to be completed has been developed and provided as Appendix D. The partial containment on-site and a commitment to promptly respond to all spills are proposed as secondary containment equivalency. An exemption from the City of Chicago Liquid Waste Handling Facility Permit requirements for sized secondary containment of the two (2) outdoor tanks is requested based upon the limited threat to public health and/or the environment in the event of a release.

6.2 Other Potential Sources

There is only one (1) liquid transfer area at the facility, and the station is located inside of the northern portion of the Processing Building. Containment of the tanker truck transfer operations is provided by the building structure with concrete walls and floor. The trench drains in the transfer area flow to concrete sump pits that subsequently direct liquids into the liquid receiving tanks flow via sump pump. There are no direct connections from the transfer area to sanitary sewers. Therefore, the transfer area is fully contained. A slug discharge to the MWRD is not considered a possibility from transfer operations. Spill supplies will be utilized to clean floors in the event of a spill.

The utility-owned oil-filled transformers do not have a form of containment other than cautious oversight by facility personnel during daily inspections. The newly installed transformers are not expected to be a likely source of release, and the mineral oil volume that could be released would be expected to only impact on-site property; no off-site flow or discharge to the MWRD sewer system should occur. Facility personnel will deploy spill supplies in the event that oil is observed to be leaking from the units during facility inspections, and the utility will be promptly notified so repair or replacement can be performed. Cautious oversight and prompt response using available equipment on-site to block and/or absorb a spill will serve as the containment for transformers.

All drums/totes are stored inside. The storage inside a concrete wall and floor building provides full secondary containment. There is no floor drains that would allow for a release to the sewers. Spill supplies will be located in the maintenance area for use in quick response, if necessary.

DRAFT

©2022, DAI Environmental, Inc.

7.0 IMPRACTICABILITY CONSIDERATIONS

No impracticability considerations are considered for this facility.

8.0 INSPECTIONS/RECORD KEEPING

Daily inspection will be conducted by facility personnel during operating hours as required by Chicago Liquid Waste regulations. Daily inspection will be performed to identify signs of malfunctions, leaks/spills, deterioration/corrosion, cracks/damage, or other signs of potential concern for tanks, piping, and secondary containment. Daily inspections will be documented on the *Daily Tank Inspection Log* and *Daily Secondary Containment Checklist* forms (see Appendix E). In addition to daily inspections, formal monthly (at a minimum) inspections of the entire facility, tanks, equipment, etc. will also be performed to identify deterioration, malfunctions, and possible leaks. The inspections include: tank shell, supports, foundations, fittings, pumps, valves, pipes/hoses, and other equipment; bulk containers and associated storage areas; oil-filled transformers; containment structures; spill supplies; and transfer areas. The inspections will be recorded on the *Monthly Facility Inspection Log* form and signed by the inspector (see Appendix E). Any abnormalities, leaks, corrosion, and/or signs of damage will be recorded and reported. Repairs or modifications will be performed promptly. As required, copies of the completed inspection forms will be maintained in the same location as the SPCC Plan for at least 3-years.

9.0 PERSONNEL TRAINING AND SPILL PREVENTION PROCEDURES

The person accountable for spill prevention at the facility will be the **NAME TBD**, Plant Manager. The facility provides the following minimum training to oil-handling personnel prior to assignment of job responsibilities:

- General facility operations;
- Operation and maintenance of equipment to prevent discharges;
- Proper handling and spill prevention procedures;
- Oil/hazardous material discharge procedure protocols;
- Spill equipment use;
- General knowledge of oil/hazardous material characteristics;

©2022, DAI Environmental, Inc.

- Understanding of causes for concern regarding spills, particularly into bodies of water;
- Applicable spill prevention and pollution control (State & Federal) laws, rules, and regulations; and
- The contents of the facility SPCC Plan

A log with the signatures of personnel who have reviewed this SPCC will be maintained at the facility. An example SPCC annual review form is provided in Appendix F. Appendix F includes a log sheet to document the oil-handling employees that have received the appropriate training.

In addition to preliminary training, refresher training for spill response will be conducted once a year, and deployment exercises for spill response will be periodically performed. Employees will also be briefed on the SPCC Plan at least once a year during a safety and environmental meeting. During this meeting, all personnel will be briefed on the purpose and scope of the SPCC, and any questions regarding the SPCC Plan and responsibilities associated with it will be answered. These briefings include discussions of potential discharges or component failures and precautionary measures. Any near misses or incidents will be discussed in these briefings in order to prevent them from recurring. Employee feedback and recommendations will be encouraged in spill prevention and operation. Additionally, notification protocols, equipment deployment and testing (spill cleanup and dispersion prevention materials), and emergency exercises for spill response will be discussed. Sign-in sheets (which include the topics of discussion at each meeting) for the annual discharge prevention meeting are included in Appendix F. Appendix F also includes a log for documenting annual refresher training and response equipment deployment/testing. Training records will be kept on file for a minimum of 3-years.

10.0 SITE SECURITY

The facility is being built in the Auburn Gresham neighborhood of Chicago. The area is a mixture of residential, commercial, and industrial properties. Typical operations (i.e., when food waste is imported and preliminarily processed) will be from 7:00-17:00, Monday-Saturday. It is possible the facility may periodically operate on Sundays. However, with anaerobic digestion operations occurring in the digester tank constantly, the facility will be continuously monitored, (24-hrs/day, 7-days/wk). Additionally, the facility is surrounded by fencing on three (3) sides, with the western

©2022, DAI Environmental, Inc.

property boundary being the concrete retaining wall of the adjacent railroad tracks. Adequate lighting is being installed to discourage and easily identify vandalism or other security concerns. Identification signage will be installed at both entrance/exit drives, the eastern off South Wallace Street and the southern off West 83rd Street.

11.0 TRUCK/RAIL LOADING RACKS

11.1 Drainage Control

Only one (1) liquid transfer area exists inside the building. The tanker truck transfer area does not meet the definition of a rack. Loading/unloading procedures meet the requirements and regulations of the United States Department of Transportation (DOT). Minor leaks may be controlled by placing drip pans under the leak. Cautious oversight and prompt response using available spill equipment on-site will also be instituted to minimize the impact of a release, though any release will be fully contained by the building structure. Green Era's emergency response contractor will be called upon to assist in the cleanup and removal of spills as needed.

11.2 Prevention of Spills Associated with Filling and Departure

Pumpable food wastes will be unloaded into two (2) 30,000-gallon holding tanks (T-050A and T-050B) located in the lower level of the Processing Building via gravity discharge from tanker trucks located on the main floor of the north end of the Processing Building. Transfers will be continuously observed by facility personnel. Personnel will be present to detect leakage or equipment malfunction and respond with spill supplies, as necessary. Drivers must comply with DOT regulations in 49 CFR 177.

12.0 REPAIR/ALTERATION OF FIELD CONSTRUCTED TANKS

There are two (2) field constructed tanks at this facility, the 320,000-gallon Biomass Equalization Tank (T-100) and the 1,680,000-gallon Digester Tank (T-105). As a best management practices, if these tanks are repaired, altered, or undergo a change of service, an evaluation of the increased risk of discharge due to brittle fracture will be completed prior placing the AST back into service.

©2022, DAI Environmental, Inc.

If an increased risk is determined, the tank will be inspected for risk of brittle fracture. Any increased risk will be mitigated before the tank is put back into service.

13.0 OTHER DISCHARGE PREVENTION

The facility is subject to both MWRD and Chicago Liquid Waste Handling Facility permit requirements. If the liquid food waste is considered by a regulatory agency as meeting the USEPA/USCG definition of "oil" per 40 CFR 112.2, then the facility will be required to meet USEPA SPCC regulations of 40 CFR 112.7 and 112.8/112.12.

14.0 QUALIFIED OIL-FILLED EQUIPMENT

The facility includes stationary oil-filled equipment in the form of transformers. There are two (2) oil-filled transformers located on-site, both pad-mounted units that are owned by ComEd. There are no specific safeguards in place for the transformers. However, cautious oversight of the transformers aids in the control and mitigation of a potential spill. Facility personnel can will quickly deploy spill supplies in the event that oil is observed to be leaking from a transformer unit and ComEd will be promptly contacted to handle the required repairs and/or replacement of transformers. Any spill from a transformer is expected to be of a volume that will remain on-site and of limited extent. All oil-filled process equipment on-site have oil reservoirs with capacity less than 55-gallons and are located inside the Processing Building.

15.0 FACILITY DRAINAGE

15.1 Facility Drainage from Diked Areas

There are no diked areas at the facility that are exposed to precipitation.

15.2 Facility Drainage from Undiked Areas

The areas of the facility with a threat of release that are undiked are the primary ASTs and the transformers. Flow from these areas will direct to the on-site stormwater detention basin via engineered grading and on-site sewer systems. A spill evaluation with response actions has been

©2022, DAI Environmental, Inc.

developed (see Appendix D) to address a worst case release scenario where the release overwhelm the detention basin and/or results if off-site flow (i.e., not 100% of flow directs to the detention basin).

15.3 Facility Drainage Treatment

No pretreatment of the wastewater (i.e., the filtrate) is expected to be conducted or necessary. There is no wastewater treatment system in use at the facility.

16.0 BULK STORAGE TANKS

16.1 Bulk Storage Container Construction

All liquid storage tanks at the facility are single-walled, constructed of carbon steel or concrete. All tanks are made of materials compatible with their contents: liquid food waste, digestate or filtrate (wastewater), and ethylene glycol.

16.2 Bulk Storage Secondary Containment

As discussed in Section 6.1, compliance with secondary containment requirements is met for most storage tanks at the facility by being located inside of the Processing Building. The building has concrete walls and floor, and no open floor drains in the building are directly connected to the sanitary sewer system. All trench drains and sumps within liquid storage areas direct captured liquids back to the two (2) liquid receiving tanks.

An exemption from the requirement for sized secondary containment is requested for the Biomass Equalization Tank and the Digester Tank based upon the limited threat to public health and/or the environment in the event of a release. Alternatively, the partial secondary containment that will be provided by the on-site detention basin and a commitment to prompt response in the event of a release is proposed as secondary containment equivalency. Due to the lack of sized secondary containment and the potential for off-site release, a spill evaluation has been completed based upon a worst case release scenario that provides the expected extent of impact and release actions to be completed (see Appendix D).

©2022, DAI Environmental, Inc.

Spill response supplies will also be maintained on-site for use in smaller volume spills. In the event of a larger spill, additional assistance will be obtained from the spill response contractor.

16.3 Secondary Containment Drainage

As previously noted, there is no diking at the facility exposed to precipitation.

16.4 Underground Storage Tanks

There are no underground storage tanks or partially buried tanks at this facility.

16.5 Aboveground Storage Tanks Testing and Leak Prevention

The external surface of each tank will be frequently observed by operating personnel, and facility personnel perform daily and monthly inspections of the ASTs and bulk storage containers to identify signs of deterioration. Any leaks, drips, or other malfunctions will be noted on inspection forms. Repairs or modifications will be performed immediately, if necessary.

Tanks covered under the manufacturer's warranty do not require integrity testing provided that the tank is intact and free of damage. Absent a warranty, formal integrity testing should be performed by a certified inspector per appropriate protocol to monitor for damage, corrosion, or other deterioration not easily identifiable during general visual tank inspection by facility personnel industry standards. Industry standard protocols for tank inspection include American Petroleum Institute (API) 653 (can be applied to water/wastewater storage), Steel Tank Institute (STI) SP001, or the applicable America Water Works Association (AWWA) manual of practice. Integrity testing generally includes visual integrity inspection (internal and external); single-walled tanks are often additionally inspected by non-destructive means (e.g., hydrostatic, radiographic, ultrasonic, and/or acoustic testing). Inspection standards and results dictate the interval between inspections. A file will be maintained for each tank inspected that includes the inspection reports, as well as repair and modification information. Comparison records will be maintained for two (2) tests at a minimum.

The two (2) outdoor tanks will be equipped with internal heating loops for non-contact heat transfer. The tanks and heat transfer system will be new and unlikely to be a concern of failure.

©2022, DAI Environmental, Inc.

However, the glycol return from the tanks to the running heat transfer system will be monitored for signs of leakage that requires repair. All ASTs will be grounded. All tanks will be equipped with automatic gauging and continually monitored by the SCADA system with automatic signal processing and alarming. Additionally, the large-volume ASTs have been built with overflow piping that connects to a 3,000-gallon sump tank. Engineered controls will be regularly inspected/tested to ensure proper functioning.

16.6 Portable Storage Tanks

There will be drums/totes and other small volume containers of oil, polymer emulsion, and chemical stored inside the Processing Building. All drums/totes will be stored inside. The storage inside a concrete wall and floor building provides full secondary containment. There are no floor drains that would allow for a release to the sewers. Spill supplies will be located in the maintenance area for use in quick response, if necessary.

17.0 FACILITY TRANSFER OPERATIONS

Some underground piping associated with the anaerobic digestion process exists between the Processing Building and the outdoor tanks. All underground piping is coated. The piping is not wrapped or cathodically protected but is bedded in a non-corrosive stone backfill. Currently no piping is in standby service. Any pipeline that enters standby service will be blank-flanged and marked. Pipe supports were designed to minimize abrasion and corrosion. The supports allow for thermal expansion and contraction of the supported pipelines. Most aboveground pipelines at the facility will be inside, and all piping will be inspected daily and monthly. Any irregularities will be noted on inspection forms and corrected immediately by on-site maintenance personnel. Additionally, formal piping inspections by a certified inspector may be performed on aboveground piping following API 570 standards. Formal piping inspections typically include collection of thickness measurements to determine corrosion rate and remaining life. There is no piping located in areas where vehicle traffic exists. All aboveground piping will be sufficiently protected.

DRAFT

©2022, DAI Environmental, Inc.

FIGURES

DRAFT

©2022, DAI Environmental, Inc.

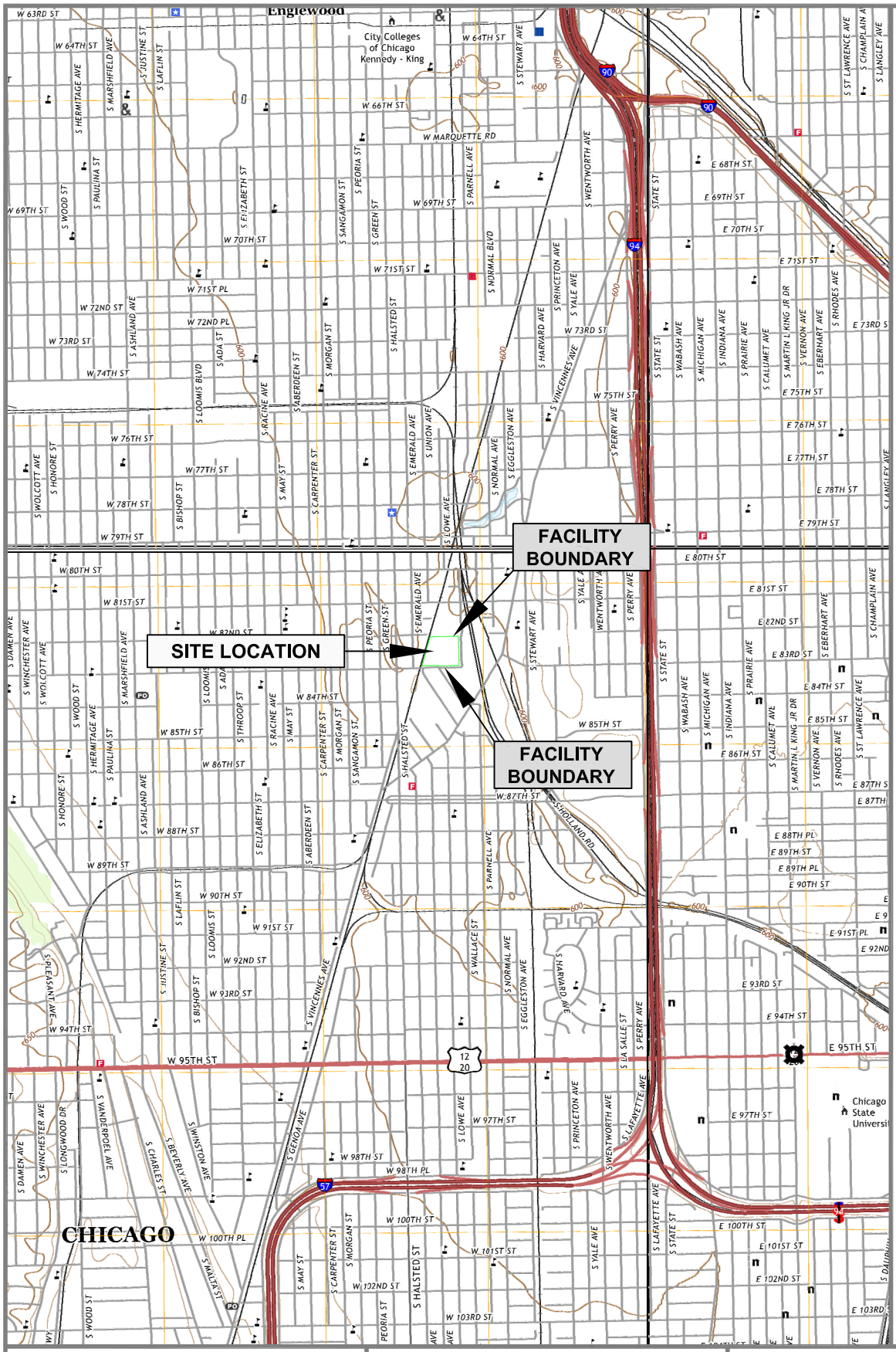

LEGEND

APPROXIMATE SITE PROPERTY BOUNDARY

BLUE ISLAND & ENGLEWOOD QUADRANGLES ILLINOIS-COOK CO.

AND

JACKSON PARK & AND LAKE CALUMET QUADRANGLES ILLINOIS-INDIANA 7.5-MINUTE SERIES (2021 TOPOGRAPHIC)

N

0' 3,000'

S C A L E

CAD FILE: 7741-01B

REVISED: 09/09/21

PAL ENVIRONMENTAL

GREEN ERA RENEWABLE ENERGY AND URBAN FARMING CAMPUS
650 WEST 83RD STREET
CHICAGO, ILLINOIS

FIGURE 1
SITE LOCATION MAP

CAD FILE: 7741-14 (MWRD)
REVISED: 10/15/21

ENVIRONMENTAL

GREEN ERA RENEWABLE ENERGY AND URBAN FARMING CAMPUS
650 WEST 83RD STREET
CHICAGO, ILLINOIS

FIGURE 2
AERIAL VIEW OF SITE AND SURROUNDING PROPERTY USAGE
(MAY 2021 AERIAL TAKEN GOOGLE MAPS)

AABBITT ADHESIVES, INC.

WEST 82ND STREET

SOUTH EMERALD AVENUE

RESIDENTIAL

RESIDENTIAL

RESIDENTIAL

METRA

UNION PACIFIC RAILWAY

SOUTH WALLACE STREET

FACILITY BOUNDARY

REGULATOR & GAS UTILITY CONNECTION

WATER TOWER

T-105 DIGESTER AST (1,680,000-GAL)

T-100 BIOMASS EQUALIZATION AST (320,000-GAL)

3,000-GAL UNDERGROUND OVERFLOW SUMP

MCC

METER

COMP

REG

GC

PSA

BIOGAS UPGRADE EQUIPMENT SKIDS

COMPOST LOADING & HANDLING BUILDING (POLE BARN) (TEMPORARY INDOOR MATERIAL STOCKPILING)

THERMAL OXIDIZER

FLARE BURNER

PROCESSING BUILDING

BASEMENT

ELEC

IONIZER CABINET

BLOWERS & UTILITY ROOM

HVAC STACK

OFFICE BATH

MUNICIPAL DUMPSTER ENCLOSURE

PROCESS WASTEWATER DISCHARGE FROM BUILDING

SANITARY WASTEWATER DISCHARGE FROM BUILDING

COMBINED PROCESS AND SANITARY WASTEWATER

PARKING (3 SPACES)

PARKING (9 SPACES)

PARKING (7 SPACES)

VEGETATION

HOOP HOUSE (INDOOR FARMING)

HOOP HOUSE (INDOOR FARMING)

HOOP HOUSE (INDOOR FARMING)

HOOP HOUSE (INDOOR FARMING)

URBAN AGRICULTURE AREA

STORMWATER POND (659,647-GAL)

HWL=13.00

COMMUNITY GARDEN CENTER

FACILITY BOUNDARY

FINAL MANHOLE

VALVE BOX

SAMPLING & METERING MANHOLE (OUTFALL 1A)

WEST 83RD STREET

UNDEVELOPED

CHURCH

MAHALIA JACKSON PARK

DIAMOND WASTE & RECYCLING

TRUCK TRAILER PARKING

LEGEND

- PROPERTY BOUNDARY OF COMPOSTING FACILITY (8.095-ACRES)
- RAILROAD TRACKS
- GAS UTILITY
- BIOGAS/BIOMETHANE/TAIL GAS PIPING
- WATER UTILITY
- STORM SEWER
- SANITARY SEWER
- MWRD COMBINED SEWER (OFF-SITE)
- T — ELECTRICAL TRANSFORMER
- FENCING (6-FT HIGH)
- ASPHALT PAVING
- GRAVEL COVERING
- ON-SITE TOPOGRAPHIC CONTOUR LINE (CITY OF CHICAGO DATUM)
- SURFACE FLOW DIRECTION
- TANKER TRUCK TRANSFER AREA
- SPILL SUPPLIES (COMM. EQUIPMENT ON PERSONNEL AND IN PROCESSING BUILDING)

NOTE: DISCHARGE SAMPLING (I.E., OUTFALL 1A) PROPOSED TO BE PERFORMED AT METERING MANHOLE INSTEAD OF FINAL ON-SITE MANHOLE; METERING MANHOLE REPRESENTATIVE OF COMBINED FACILITY DISCHARGE, INCLUDING SANITARY DISCHARGE)

N

0’ 100’

S C A L E

CAD FILE: 7741-12A

REVISED: 02/11/22

DAI ENVIRONMENTAL

GREEN ERA RENEWABLE ENERGY AND URBAN FARMING CAMPUS
650 WEST 83RD STREET
CHICAGO, ILLINOIS

FIGURE 3
SITE PLAN AND DRAINAGE DETAIL

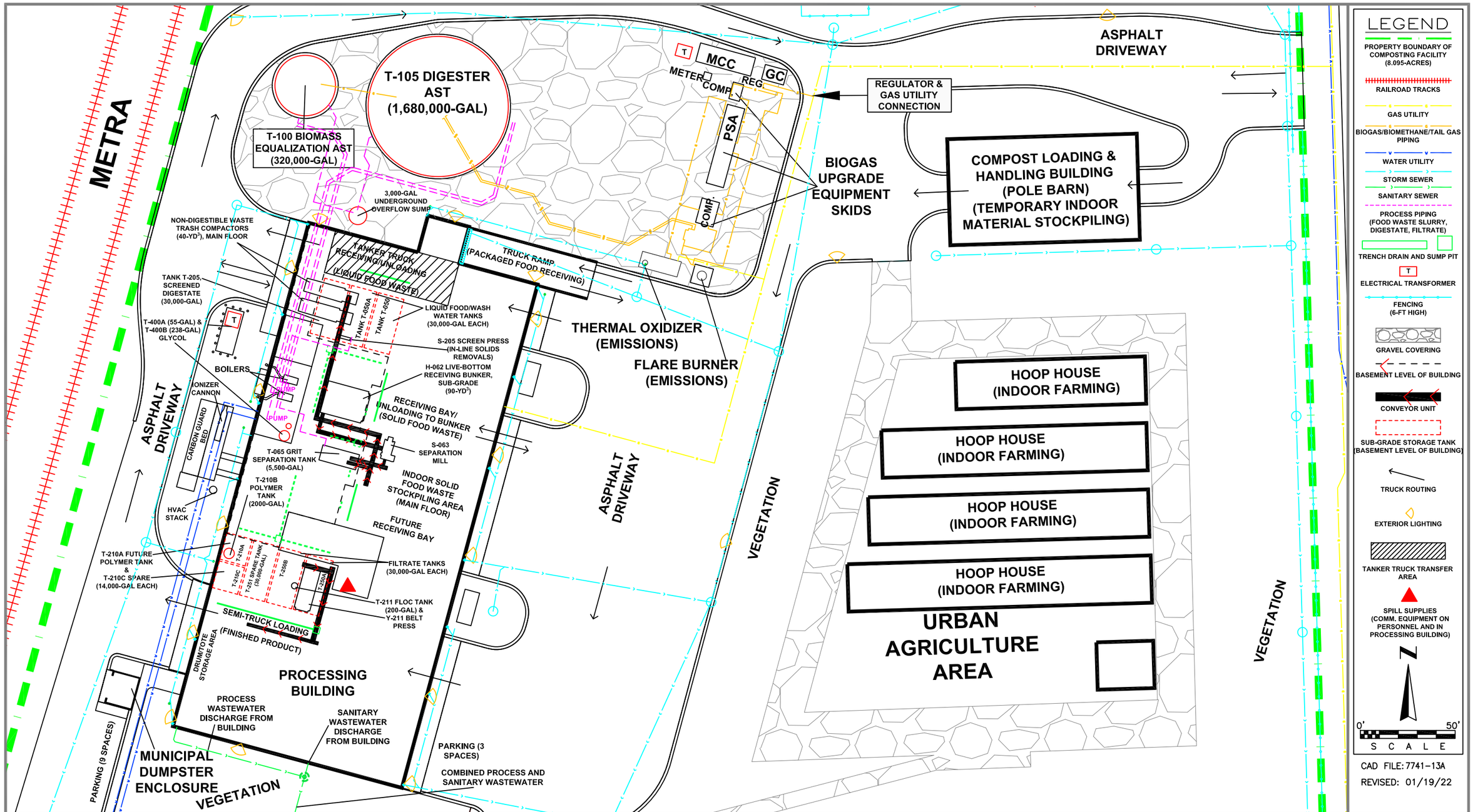

DAI ENVIRONMENTAL

GREEN ERA RENEWABLE ENERGY AND URBAN FARMING CAMPUS
650 WEST 83RD STREET
CHICAGO, ILLINOIS

FIGURE 3A
SITE DETAIL SHOWING
PROCESS OPERATIONS AND EQUIPMENT

APPENDIX A
SOP-21-001
(SPILL RESPONSE PROCEDURES)

DRAFT

©2022, DAI Environmental, Inc.

Green Era	**Standard Operating Procedure** **Spill Contingency Plan**	SOP-21-001 Revision: 1 Effective: 10/25/21 Reviewed: 10/25/21

1 Purpose

This SOP establishes consistent methods for responding to spill, mitigating the impact, clean-up, recordkeeping, and notification.

2 Scope

This SOP applies to facility operations at the Green Era digester facility and affiliated contract operations for product transportation on public or private roadways and/or composting operations.

3 Definitions and Acronyms

3.1 Cake Solids

The semi-solid organic fiber separated from the stabilized anaerobic digestate during the dewatering process. This material still contains between 70% and 80% water, but is stackable. Cake solids can contain pathogens. The cake solids can contain a significant amount of plant available nitrogen and phosphorus, similar to animal manure.

3.2 Carbon Dioxide

Odorless, colorless gas that is non-combustible. Carbon dioxide is produced by bacteria during anaerobic digestion and may be released from feedstock or digestate during a spill event. In confined spaces, carbon dioxide can displace oxygen and represents a suffocation hazard.

3.3 Digestate

Digestate is the resultant liquor after the process of anaerobic digestion has treated the feedstock. For this facility, digestate is always pumpable. Digestate can contain pathogens. The pH of the digestate is normally slightly alkaline and can range from 7.2 pH to 8.5 pH. Digestate may produce hazardous gasses including methane, carbon dioxide, and hydrogen sulfide. The digestate contains a significant amount of plant available nitrogen and phosphorus, similar to liquid animal manures.

3.4 Feedstock

Any solid or pumpable untreated organic waste that is received by the facility for treatment by anaerobic digestion, whereby volatile solids will be reduced and pathogens will be reduced. Feedstock can contain pathogens. The pH of feedstock varies depending on the source organic material. It is often acidic, especially after holding in a tank. The pH of hydrolyzed feedstock within the feedstock tank can vary from 3 to 5 SU. Feedstock may produce hazardous gasses including methane, carbon dioxide, and hydrogen sulfide.

3.5 4 gas meter

A portable safety device that is used to detect the presence of combustible gasses, low oxygen levels, and hydrogen sulfide. Fire departments will have these meters on the truck. Green Era keeps these meters at the plant.

3.6 Hydrogen Sulfide

Colorless gas that has a pungent smell similar to rotten eggs, natural gas odorants, or a skunk. Hydrogen sulfide can be smelled at levels lower than 1 part per million. Hydrogen sulfide can accumulated in confined spaces and is toxic. 10 PPMV is the OSHA permissible exposure limit over an 8-hour time weighted average. A personal respirator should be worn when H2S is detected above 5 PPMV by a 4-gas meter.

3.7 Methane

Odorless, colorless gas that is combustible and can be an explosive hazard in the presence of oxygen. Methane is produced by bacteria during anaerobic digestion and may be released from digestate during a spill event.

3.8 Plant Operator

Onsite personnel who have the designated responsibility to operate and maintain the facility on behalf of Green Era.

3.9 Acronyms

SOP – Standard Operating Procedure
PPE – personal protective equipment

4 Procedure in the event of a spill

4.1 Evacuate the area to protect yourself and others

First move to a safe location to assess the spill. Be aware of gasses that may be released from the spill. Move to a well ventilated area if inside, or upwind, if outdoors. Gather and use PPE equipment as needed before reentering the spill affected area. PPE equipment will depend on the hazard, but is likely to include gloves, boots, respirator, and a 4-gas meter.

4.2 Get help and Notify

Notify others nearby first to alert them to the spill and have them visually monitor the activity from a safe location. Do not reenter the spill affected area without having one or more persons onsite who would be able to help if you have an accident containing the spill. Contact the plant operations manager if not already notified. If the spill, of 25 gallons or more, occurred on a public site, call the IEPA Spill Hotline at 1-800-282-9378.

4.3 IEMA Spill Notification 1-800-782-7860 (25 gallons or more that isn't contained on Green Era's property)

If contacting the Illinois Emergency Management Agency, plan to provide the following information.

4.3.1 Responsible Party – name of carrier

4.3.2 Date/time of the spill

4.3.3 Location (address, cross-street, or mile marker) use phone to determine location if needed.

4.3.4 Materials (cake solids, digestate, or feedstock product) If the result of a traffic accident, check for diesel or fuel leakage.

4.3.5 Quantity (estimated spilled and the total potential amount – size of tank)

4.3.6 Hazards (pathogens, H2S) and advise for any first responders

4.3.7 Affected media/area (air, land or waterway, including threats to ditches, storm sewers, and streams).

4.3.8 Actions/notifications (evacuations, containment, contractor hired for cleanup)

4.3.9 Contacts on the scene (responder cell phone, responsible party, contractor, facility point of contact)

4.3.10 Other useful info. (Truck DOT number etc).

4.4 Stop the source of the spill

If possible, stop further material from being spilled and/or take steps to reduce the flow of material from the containment.

4.4.1 Close valves

If a pipe has broken, and an upstream valve is accessible, close the valve.

4.4.2 Stop pumping

For tank overflows, stop pumping into the tank and begin to transfer out of the tank to other tanks with available storage volume, if possible.

4.5 Contain the spill

Build berms with available material to contain spill and direct fluid away from storm water drains, swales, ditches or any waters of the state. Bermed dirt and sand bags can be effective in diverting flow. A dug hole can help to pump up material with a vac truck. Fine

shredded bark mulch and/or saw dust can be effective in absorbing small amounts of spilled liquid so it can be handled as a solid. Straw bales can be used to dike ditches if staked.

Small volumes of spilled cake solids can be shoveled into a truck or other bin. Larger volumes can be cleaned up with a loader. If cake sludge was spilled on a public roadway, the area should be swept broom clean. After sweeping, if residual remains on the roadway that would make the surface slippery, the material should be rinsed off with water.

Fuels or oils should be absorbed with oil dry and/or absorbent mats that are kept in the facility's spill kit.

4.6 Document the extent of the spill

Use a cell phone or digital camera to take photos and/or video of the spill source, affected area and containment. Use voice memos or take notes for further incident documentation and reporting. Note the time the spill occurred and the time when the spill was contained.

4.7 Clean up

4.7.1 Large volume spills, greater than 25 gallons

Have a vacuum truck service assist with clean-up of large quantities of spilled liquids. Dig holes to create a sump areas for the vac truck to use. Direct spilled fluids/sludges to the holes.

4.7.2 Spills on impervious (paved) surfaces

Use rubber squeegees, brooms and flat scoop shovels, to remove bulk material from paved areas and roadways. Push to an area where bulk material can be contained and removed.

4.7.3 Public Roadways

Set up cones and have someone direct traffic away from the spill as necessary. Notify the local authority of this activity, sheriff, State Highway Patrol, or local police dept.

After removing bulk sludge from a roadway, flush the roadway with fresh water after a spill to clean. The size of the spill on a public roadway and length of affected area will determine the type of equipment used to irrigate the road. A pressure washer service or vac truck with water on board may be used effectively depending on the spill type. If there is a major public safety issue or the spill occurred on a busy highway, the local authority may have the fire dept respond to assist. Roadways should be cleaned to the satisfaction of the local authority.

4.8 Document the clean-up

Use a cell phone or digital camera to take photos and/or video of the cleaned area. Use voice memos or take notes for further incident documentation and reporting of the clean-up methods used. Be sure to note who responded to the spill, who assisted with clean-up, and equipment that was used. Note the time when the clean-up started and when it was completed.

4.9 Additional Internal Notification

Plant manager should be informed of the spill and s/he should inform the operations manager and the asset manager.

4.10 Regulatory Notification

If the spill was more than 25 gallons and occurred offsite, the spill should be reported the Illinois EPA 217-782-3637 and a spill report should be filed with their office. Initial notification should occur within 24 hours of the incident with report to follow within 5 days.

Contact the MWRD 312-751-5600 if any slug discharge or potential slug discharge will occur as a result of the spill or clean-up. The storm water and sanitary sewers are a combined system at the Green Era plant and they are treated by the Stickney Water Reclamation Plant.

4.11 Record retention

Spill reports and incident records should be retained for the life of the facility.

5 References

5.1 MP-06 Green Era Emergency Response Plan

APPENDIX B
SOP-21-002
(SEWER SPILL PREVENTION AND REPORTING)

DRAFT

©2022, DAI Environmental, Inc.

Green Era	**Standard Operating Procedure** **Sewer Spill Prevention and Reporting**	SOP-21-002 Revision: 2 Effective: 11/12/21 Reviewed: 11/12/21

1 Purpose

This SOP establishes consistent methods for preventing unintended discharges to the Chicago sewer and for responding to a spill that has entered the combined sanitary and stormwater sewer system through a floor drain, manhole, or pipe and may impact the receiving Chicago wastewater treatment facility.

2 Scope

This SOP applies to facility operations at the Green Era plant.

3 Definitions and Acronyms

3.1 Carbon Dioxide

Odorless, colorless gas that is non-combustible. Carbon dioxide is produced by bacteria during anaerobic digestion and may be released from feedstock or digestate during a spill event. In confined spaces, carbon dioxide can displace oxygen and represents a suffocation hazard.

3.2 Detention Pond

The earthen stormwater holding pond on the southeast corner of the Green Era site that collects storm water from all on-site stormwater gathering pipes. Retained stormwater will overflow to the City sewer after reaching an invert elevation of 9-feet and will discharge through an 8-inch pipe from the catch basin located in the southeast corner of the property.

3.3 Digestate

Digestate is the resultant liquor after the process of anaerobic digestion has treated the feedstock. For this facility, digestate is always pumpable. Digestate can contain pathogens. The pH of the digestate is normally slightly alkaline and can range from 7.2 pH to 8.5 pH. Digestate may produce hazardous gasses including methane, carbon dioxide, and hydrogen sulfide.

3.4 Fats, Oils, and Grease

Fats, Oils, and Grease (FOG) is a classification of feedstock that is received at Green Era. FOG is collected from grease traps by vacuum trucks from food service establishments. FOG is a mixture of water and lower density fats, oils, and grease that have a lower density than the water and float on top of the water. This waste may also include food solids.

3.5 Feedstock

Any solid or pumpable untreated organic waste that is received by the facility for treatment by anaerobic digestion, whereby volatile solids will be reduced and pathogens will be

reduced. Feedstock can contain pathogens. The pH of feedstock varies depending on the source organic material. It is often acidic, especially after holding in a tank. The pH of hydrolyzed feedstock within the feedstock tank can vary from 3 to 5 SU. Feedstock may produce hazardous gasses including methane, carbon dioxide, and hydrogen sulfide.

3.6 Filtrate

The remaining water after solids are separated from the digestate during the dewatering process on the belt press. Filtrate will be discharged to the sanitary sewer.

3.7 4 gas meter

A portable safety device that is used to detect the presence of combustible gasses, low oxygen levels, and hydrogen sulfide. Fire departments will have these meters on the truck. Green Era keeps these meters at the plant.

3.8 Hydrogen Sulfide

Colorless gas that has a pungent smell similar to rotten eggs, natural gas odorants, or a skunk. Hydrogen sulfide can be smelled at levels lower than 1 part per million. Hydrogen sulfide can accumulated in confined spaces and is toxic. 10 PPMV is the OSHA permissible exposure limit over an 8-hour time weighted average. A personal respirator should be worn when H2S is detected above 5 PPMV by a 4-gas meter.

3.9 Methane

Odorless, colorless gas that is combustible and can be an explosive hazard in the presence of oxygen. Methane is produced by bacteria during anaerobic digestion and may be released from digestate during a spill event.

3.10 Plant Operator

Onsite personnel who have the designated responsibility to operate and maintain the facility on behalf of Green Era.

3.11 Sewer, or Sanitary Sewer

The pipe system that carries wastewater and stormwater to a Chicago wastewater treatment facility. The Green Era facility is connected to a sewer main pipe that carries the waste to the Stickney Water Reclamation Facility.

3.12 Slug Discharge

Any discharge to the sewer system of a non-routine, episodic nature, including but not limited to an accidental spill or a non-customary batch discharge. Definition in accordance with 40 CFR 403.8(F)(2) (VI).

3.13 Storm water

Rainwater that is collected from impervious surfaces (pavement, buildings) and directed to common discharge pipes that discharge it to surface waters of the State (creeks, streams, rivers) or to a combined sanitary and stormwater sewer pipe.

3.14 Acronyms

COD – Chemical Oxygen Demand
FOG – fats, oils, and grease
PPE – personal protective equipment
SOP – Standard Operating Procedure
TS – Total Solids
WWTP – waste water treatment plant

4 Normal Discharge Practices to the City Sewer

4.1 Process Building

The process building is connected to the sanitary sewer. The 8-inch sewer pipe exits the south side of the building. It continues south towards W. 83rd Street. The final sanitary manhole on the property is located just east of the entrance driveway from W. 83rd Street within 10-feet of the fence.

The building restrooms, sinks, shower, and boiler room floor drains are all connected with the sanitary sewer. Trench drains on the main level receiving floor, dewatering area, and lower level are connected to the process sumps and liquid receiving tanks for treatment in through the anaerobic digester.

No concentrated chemicals shall be dumped, disposed of, or discharged to the sinks or floor drains.

All digestate and process wastewater resulting from the treatment of organic waste shall be stored in closed tanks. Wastewater will be discharged to the sanitary district under an approved Discharge Authorization.

4.1.1 Dewatered Filtrate / Process Wastewater

Filtrate from the dewatering operation (belt press) will drain to two below slab receiving tanks. The filtrate will be pumped from these tanks through a force main to the sanitary discharge pipe. An electromagnetic flowmeter will be installed in the filtrate force main and discharge volume will be recorded on the plant SCADA. The filtrate will also be composite sampled for nutrient analysis. The facility combined discharge (i.e., process wastewater plus sanitary

wastewater) will be sampled semi-annually per MWRD requirements for compliance certification and invoicing.

4.2 Yard overflow tank

The yard process tanks (biomass tank and digester) have dedicated overflow pipes at the maximum tank operating levels below the roof. The overflow pipes are routed down the outside of the tanks and are piped to a concrete transfer tank in the yard. The transfer tank has redundant sump pumps to transfer any overflowed sludge or foam to the feedstock receiving pits in the process building so it can be treated again in the AD system. There are multiple controls in place to prevent tank overflow conditions from occurring. The highest risk for a tank overflow condition is in the feedstock tank if the blend of feedstocks produces a lot of gas and foaming occurs whereby the density of the feedstock in the tank is reduced due to the entrained gas and would provide a false level reading from the pressure sensor at the base of the tank used to determine tank level. A secondary level sensor is also installed at the top of the tank that uses radar to directly detect the distance to the liquid level. The level readings from both sensors is continually monitored by the SCADA and will notify operations staff if foam conditions are detected so steps can be taken to ensure an overflow event does not occur.

4.3 Condensate trap

The gas condensate trap that collected hydrogen sulfide laden water from the biogas piping is pumped to the liquids receiving tank at the head of the plant. The condensate trap manhole is located northwest of the flare and thermal oxidizer.

5 Storm water

5.1 Collection System

All stormwater catch basins and stormwater culverts on the site discharge to the detention pond on the southeast corner of the property. Retained stormwater will overflow to the City sewer after reaching an invert elevation of 9-feet and will discharge through an 8-inch pipe from the catch basin located in the southeast corner of the property.

5.2 Parking area catch basins

Catch basins in the parking area are connected with the storm water drains. This flow does not directly enter the waters of the State. It is collected in the detention pond and then overflows to the combined sanitary and stormwater sewer.

5.3 Tank Yard

The catch basins in the tank yard are connected to the stormwater system. In event of a spill in the tank yard, this catch basins in the yard should be plugged and/or covered to prevent discharge of any runoff to the detention pond.

6 Stored Chemicals

6.1 Bulk quantities in excess of 5 gallons

Chemical	Where Used	Quantity Stored	Storage Container
Virgin Motor Oil, hydraulic oils, gearbox oils	Stationary Engine / Generator, Gas compressors.	Less than 600 gallons	55 gallon steel drums or 275 gallon totes
Used Oils	Stationary Engine / Generator, Gas compressors.	Less than 300 gallons	55 gallon steel drums or 275 gallon totes
Virgin Ethylene Glycol	Stationary Engine / Process heating (boiler) as heat transfer fluid	Less than 300 gallons	55 gallon steel drums or 275 gallon totes. Also in plastic tank system feeders, qty 2 in building.
Diluted Ethylene Glycol	Stationary Engine / Process heating (boiler) as heat transfer fluid	Less than 300 gallons.	Drained glycol from process heating system during maintenance.

6.2 Non-bulk Chemicals

An inventory listing of all fuels, lubricants, paints, cleaning products and other chemicals used for the maintenance and upkeep of the facility shall maintained. Chemicals used for laboratory testing should also be listed. See facility chemical inventory list (maintained at plant) with SDS sheets.

7 Procedures in event of a Spill or SLUG discharge to the sewer

7.1 For a spill, evacuate the area to protect yourself and others

First move to a safe location to assess the spill. Be aware of gasses that may be released from the spill. Move to a well ventilated area if inside. Gather and use PPE equipment as needed before reentering the spill affected area. PPE equipment will depend on the hazard, but is likely to include gloves, boots, respirator, and a 4-gas meter.

7.2 Get help and Notify

Notify others nearby first to alert them to the spill and have them visually monitor the activity from a safe location. Do not reenter the spill affected area without having one or more persons onsite who would be able to help if you have an accident containing the spill. Contact the plant operations manager if not already notified.

7.3 MWRD Immediate Notification

During normal business hours, contact the MWRD R&D Dept., Industrial Waste Division to report the discharge.

MWRD Industrial Waste Div. (312) 751-3044 – follow the representative's instructions, if no one is directly reached, leave a message and call the number below for the Systems Dispatcher available 24/7.

Systems Dispatcher: 312-787-3575, staffed 24/7

Be prepared to provide the following information

7.3.1 Your name and cell phone number where you can be reached.

7.3.2 Service address: 650 West 83rd

7.3.3 Company name: Green Era

7.3.4 Federal Tax ID: 81-3934327

7.3.5 Date/time of the spill

7.3.6 Materials (digestate, feedstock product, or chemical)

7.3.7 Specify the approximate TS and COD if the material is digestate or feedstock.

7.3.8 Quantity (estimated spilled and the total potential amount – size of tank or line where you expect the leak to be originating from)

7.3.9 Hazards (pathogens, H2S)

7.3.10 Entry point – let them know where the material is entering the sewer, manhole, stormwater overflow, etc…

7.3.11 Actions/notifications (evacuations, containment, contractor hired for cleanup)

7.3.12 Contacts on the scene (responder cell phone, responsible party, contractor, facility point of contact)

7.3.13 Record the representative's contact information and the time the call was made.

7.4 Stop the source of the spill

If possible, stop further material from being spilled and/or take steps to reduce the flow of material from the containment.

7.4.1 Close valves

If a pipe has broken, and an upstream valve is accessible, close the valve.

7.4.2 Stop pumping

For tank overflows, stop pumping into the tank and begin to transfer out of the tank to other tanks with available storage volume, if possible.

7.5 Contain the spill

Build berms with available material to contain spill and direct fluid away from sewer drains and or stormwater catch basins. Bermed dirt and sand bags can be effective in diverting flow. If outdoors and entering through a manhole, a dug hole can help to pump up material with a vac truck. Fine shredded bark mulch and/or saw dust can be effective in absorbing small amounts of spilled liquid so it can be handled as a solid. Straw bales can be used to dike ditches if staked.

7.6 Document the extent of the spill

Use a cell phone or digital camera to take photos and/or video of the spill source, affected area and containment. Use voice memos or take notes for further incident documentation and reporting. Note the time the spill occurred and the time when the spill was contained.

7.7 Clean up

7.7.1 Large volume spills, greater than 25 gallons

Have a vacuum truck service assist with clean-up of large quantities of spilled liquids. Dig holes to create a sump areas for the vac truck to use. Direct spilled fluids/sludges to the holes.

7.7.2 Spills on impervious (paved) surfaces

Use rubber squeegees, brooms and flat scoop shovels, to remove bulk material from paved areas and roadways. Push to an area where bulk material can be contained and removed.

7.8 Document the clean-up

Use a cell phone camera or other digital camera to take photos and/or video of the cleaned area. Use voice memos or take notes for further incident documentation and reporting of the clean-up methods used. Be sure to note who responded to the spill, who assisted with clean-up, and equipment that was used, and which agencies were notified with their contacts. Note the time when the clean-up started and when it was completed.

7.9 Additional Internal Notification

Plant manager should be informed of the spill and s/he should inform the operations manager and the asset manager.

7.10 Further Regulatory Notification

A written follow-up report shall be submitted to MWRD within five (5) calendar days of the incident. **The current form is RD-116, revised July 1998.**

https://mwrd.org/sites/default/files/documents/RD-116.pdf

The report shall contain the following:

1. A description of the discharge, the cause of the upset, and the upsets impact upon the user's compliance status.

2. The period of non-compliance, including the exact dates and times of noncompliance, and if the noncompliance continues, the time by which the non-compliance is expected to be corrected.

3. Any and all steps taken, or to be taken, to reduce, eliminate, and prevent recurrence of the non-compliance.

Submit this written report to:

MWRD
Industrial Waste Division
Enforcement Section
111 East Erie Street
Chicago, Illinois 606111
E-Mail: mwrd-ucts@mwrd.org

7.11 Record retention

Spill reports and incident records should be retained for the life of the facility.

8 Training and Spill Prevention

8.1 Training

8.1.1 New employees shall be trained on the content of this SOP no later than 30 days after their first day of employment.

8.1.2 Current staff shall review this plan every 24 months along with the Spill Contingency Plan.

8.2 Prevention

8.2.1 Regular preventative maintenance and visual inspection of pumps and piping systems that convey process wastewater in the facility.

8.2.2 Store chemicals with secondary containment or keep in areas where containers are protected from damage from forklifts or other traffic.

8.2.3 Only store chemicals in containers approved for the use.

8.2.4 Minimize the volume of chemicals stored onsite.

9 Detection

9.1 Camera system and staffing

9.1.1 Maintain camera system that can remotely monitor areas of the plant for spills.

9.1.2 Walk at the beginning and end of staffed shifts to visually inspect all assets.

9.2 Automatic monitoring and alarms

SCADA/PLC system shall monitor tank levels for unexpected changes. Unexpected level drops will interlock all pumping processes to that tank and close all automatic valves to isolate piping sections. An alarm will notify the responsible party through SMS text messaging or email.

10 References

10.1 Emergency Management Plan

10.2 SOP-21-001 Spill Contingency Plan

10.3 Green Era Stored Chemical List - site log

10.4 Record drawings, stored onsite, Site Utility Plan (C-4), Building Plumbing Plans

APPENDIX C
ILLINOIS SPILL NOTIFICATION FACT SHEET AND DISCHARGE NOTIFICATION FORMS

DRAFT

©2022, DAI Environmental, Inc.

ILLINOIS EMERGENCY MANAGEMENT AGENCY

JB Pritzker
Governor

Alicia Tate-Nadeau
Director

Emergency Release Notification Fact Sheet

A. Immediate telephone notification shall be given by the owner or operator of a facility when a release equal to or exceeding the reportable quantity of an extremely hazardous substance(1) or a CERCLA hazardous substance(2) occurs at the facility.

In such incidents, notifications are to be made to the following:

1) Illinois Emergency Management Agency (IEMA)/State Emergency Response Commission (SERC) at 1-800-782-7860 (within state) or (217) 782-7860 (when calling from out-of-state);
2) Local Emergency Planning Committee (LEPC) that is likely to be affected by the release. The LEPC telephone number(s) may be obtained from the IEMA Website at http://www.illinois.gov/iema/Preparedness/SERC/Pages/default.aspx.
3) National Response Center (NRC) at 1-800-424-8802 (if the substance is a CERCLA hazardous substance).

Please Note: ***Transportation-related incidents only require 9-1-1 notification***.

B. Immediate telephone notification is also required if an incident or accident involving a hazardous material(3) occurs which results in:

1) a member of the general public is killed;
2) a member of the general public receives injuries requiring hospitalization;
3) an authorized official of an emergency agency recommends an evacuation of an area by the general public;
4) a motor vehicle has overturned on a public highway;
5) Fire, breakage, release or suspected contamination occurs involving an etiologic agent;
6) Any release of petroleum (or oil) that produces a sheen on nearby surface water(4) and/or threatens navigable waters;
7) Any spill or overfill of petroleum that results in a release to the environment that exceeds 25 gallons (25-gallon reporting threshold for USTs only)(4). ASTs are not subject to the 25-gallon spill reporting threshold in 41 IAC 176.340 but are subject to 29 IAC 430.

In such incidents, notification shall be made as noted in Paragraph A, above, except no notification is required to the NRC, except items 6 and 7 (oil that impacts water and overfills emanating from underground storage tanks).

At a minimum, notification shall include:

1) the chemical name or identity of any substance involved in the release;
2) an indication of whether the substance is an extremely hazardous substance;
3) an estimate of the quantity in pounds of any such substance that was released into the environment;
4) the time and duration of the release;
5) the specific location of the release;
6) the medium or media (air, land, water) into which the release occurred;
7) any known or anticipated acute or chronic health risks associated with theemergency and, where appropriate, advice regarding medical attention necessary for exposed individuals;
8) proper precautions to take as a result of the release, including evacuations;
9) the name and telephone number of the person or persons to be contacted for further information.

C. WRITTEN FOLLOW-UP NOTICE IS REQUIRED WITH RESPECT TO INCIDENTS AS DESCRIBED IN PARAGRAPH A, ABOVE. As soon as practicable after such release (within 30 days), the owner or operator shall provide a written follow-up emergency notice (or notices, as more information becomes available) to the SERC and the LEPC, updating the information provided in the immediate notification and including additional information with respect to:

1) Actions taken to respond to and contain the release;
2) Any known or anticipated acute or chronic health risks associated with the release;
3) Where appropriate, advice regarding medical attention necessary for exposed individuals.

1 See 40 CFR 355 for a listing of extremely hazardous substances (EHS)
2 See 40 CFR 302.4 for a listing of Comprehensive Environmental Response, Compensation and Liability Act (CERCLA) hazardous substances
3 See 49 CFR 172.101 for a list of hazardous materials
4 See 41 IAC 176.340 Reporting and Cleanup of Spills and Overfills (USTs).

(These rules are compiled in 29 IAC 430 and 29 IAC 620) ***rev. 12/2020***

Spill Response Notification Form

Note: Do not delay spill notification to collect the information on the list.

Reporter's Name (First, M.I., Last): _____

Position: _____

Phone Numbers: Day ( ) _____ Evening ( ) _____

Company:

Organization Type:

Address:

City / State / Zip:

Were Materials Discharged? _____ (Y / N)

Confidential? _____ (Y / N)

Meeting Federal Obligations to Report? _____ (Y / N) Date Called: _____

Calling for Responsible Party? _____ (Y / N) Time Called: _____

INCIDENT DESCRIPTION

Source and/or Cause of Incident (include facility storage capacity and units): _____

_____

_____

_____

_____

_____

_____

_____

_____

_____

_____

Date of Incident: _____

Time of Incident: _____ AM / PM

Incident Address/Location: _____

Submittal of Information to Regional Administrator for Qualified Discharge(s)

In the event of a qualified discharge or discharges, this page can be utilized to provide official notification to the Regional Administrator. If the Facility has had a discharge or discharges which meet one of the following two criteria, then this report must be submitted to the Regional Administrator within 60 days. (Check as appropriate)

- ☐ This Facility has experienced a reportable spill as referenced in 40 CFR Part 112.1(b) of 1,000 gallons or more.
- ☐ This Facility has experienced two (2) reportable spills (as referenced in 40 CFR Part 112.1(b)) of greater than 42 gallons each within a 12-month period.

Facility Name and Location: _____

_____

Facility Contact Person (Name, address/phone number): _____

_____

_____

Facility maximum storage or handling capacity: _____

_____

Facility normal daily throughput: _____

_____

_____

Describe the corrective action and countermeasures taken (include description of equipment repairs and replacements): _____

_____

_____

Describe the Facility (maps, flow diagrams and topographical maps attached as necessary): _____

_____

Describe the cause of discharge (as referenced in 40 CFR Part 112.1(b)) including failure analysis of the system is:_____

_____

Describe the preventative measures taken or contemplated to be taken to minimize the possibility of recurrence: _____

_____

Other pertinent information. _____

_____

- A copy of this report is also to be sent to the appropriate state agency in charge of oil pollution control activities

Nearest City: State:

County: Zip:

Distance from City:

Direction from City:

Section: Township: Range:

Borough: Not Applicable

Container Type: _____

Tank Oil Storage Capacity: _____ Units of Measure: _____

Facility Oil Storage Capacity:

Facility Latitude:

Facility Longitude:

MATERIAL

CHRIS Code of Measure	Discharge Quantity	Unit of Measure	Material Discharge in Water	Quantity	Units

CHRIS – US Coast Guard Chemical Hazards Response Information System (CHRIS)

RESPONSE ACTION

Actions Taken to Correct, Control or Mitigate Incident: _____

_____

_____

_____

_____

IMPACT

Number of Injuries: _____ Number of Deaths: _____

Were there Evacuations? _____ (Y / N) Number Evacuated: _____

Was there any Damage? _____(Y / N) Approximate Cost of Damages: _____

Medium Affected: _____

Description: _____

More Information about Medium: _____

_____

_____

_____

_____

_____

ADDITIONAL INFORMATION

Any information about the incident not recorded elsewhere in the report: _____

_____

_____

_____

_____

_____

_____

_____

CALLER NOTIFICATIONS

EPA? _____ (Y / N) USCG? _____ (Y / N)

State? _____ (Y / N) Other? _____ (Y / N)

Describe: _____

_____

_____

_____

_____

Log Sheet

Documentation of Government Agencies and Organizations Notified of a Discharge

Date: _____ Time: _____AM/PM (circle one)
Agency/Organization: _____
Agency Phone Number: _____
Name of Person Contacted: _____
Report Number (if any): _____

Name of Person Making Contact: _____Signature: _____

Notes/Comments (if any): _____
_____
_____

Date: _____ Time: _____AM/PM (circle one)
Agency/Organization: _____
Agency Phone Number: _____
Name of Person Contacted: _____
Report Number (if any): _____

Name of Person Making Contact: _____Signature: _____

Notes/Comments (if any): _____
_____
_____

Date: _____ Time: _____AM/PM (circle one)
Agency/Organization: _____
Agency Phone Number: _____
Name of Person Contacted: _____
Report Number (if any): _____

Name of Person Making Contact: _____Signature: _____

Notes/Comments (if any): _____
_____
_____

DRAFT

APPENDIX D
SPILL EVALUATION

©2022, DAI Environmental, Inc.

SPILL EVALUATION
(GREEN ERA RENEWABLE ENERGY & URBAN FARMING CAMPUS)

Facility Tanks

There are eight (8) tanks in use at the facility that are directly associated with the food waste composting process, including: two (2) 30,000-gallon sub-grade (in-ground, in-building) concrete holding tanks (T-050A and T-050B) for liquid food waste receiving, the slope-bottom grit hopper (in-building) with 5,500-gallon holding tank (T-065A), the 320,000-gallon Biomass Equalization Tank (T-100), the 1,680,000-gallon Digester Tank (T-105), the 30,000-gallon sub-grade (in-ground, in-building) concrete holding tank (T-205) for digestate, and the two (2) 30,000-gallon sub-grade (in-ground, in-building) concrete holding tanks (T-250A and T-250B) for filtrate.

Two (2) chemical tanks are also in use. The ethylene glycol tanks (T-400A and T-400B), 55-gallons and 238-gallons, are maintained in association with the non-contact heat transfer system.

Liquid Level and Overflow Control

All tank levels in the facility are continually monitored by the supervisory control and data acquisition (SCADA) system. The outside (yard) tanks (Biomass Equalization Tank and Digester Tank) use redundant level sensors. A hydraulic level is calculated from a pressure reading of a sensor that is installed within 24-inches of the tank floor. A distance measurement to the liquid level is also taken from a downward facing radar sensor mounted on the tank roof. The values are compared by the plant SCADA. and an alarm is sent to the plant operators if the liquid level is approaching the maximum fill level. Automatic pump processes that transfer material into the tank will also be automatically disabled in the event of a high liquid level. High tank levels may also be independently verified by visual inspection through Lexan viewing ports on the tank roof.

Process pipe connections made to nozzles at the base of the tank use a manual knife gate valve directly at the nozzle flange for positive shut-off and have an pneumatically actuated knife gate valve on each process pipe to/from the tank that are controlled by the SCADA.

Both yard tanks have a high-level overflow pipe that is directed to an underground concrete overflow sump (T-120) with a capacity of over 3,000-gallons. Pumps will transfer any captured

liquids back to the liquid receiving tanks in the Process Building. The overflow sump pit level will be continually monitored by the SCADA. If any overflow is detected, the SCADA will stop all automated pumping processes to the tanks and close all valves. An alarm message will be sent to the plant operators and be visible on the SCADA.

Secondary Containment Available

To meet the requirements for secondary containment, most holding tanks at the facility are located inside of the Processing Building. The building has a lower level with cast-in-place concrete walls and floor. The main floor of the building is concrete slab and building walls are pre-cast concrete construction. Trench drains within the waste handling areas of the building drain to sumps that discharge to the liquid waste receiving tanks. The only floor drains connected to the sanitary sewer are in the mechanical room, finished office area, and the restroom.

The two (2) outdoor tanks at the facility are 320,000-gallons and 1,680,000-gallons. Both are above-grade bolted steel tanks with a cast-in-place concrete floor and foundation system. The smaller of the tanks, the Biomass Equalization Tank (T-100), will be used to store a slurry of macerated food waste and pumpable food waste. The larger tank, the Digester Tank (T-105), will be used as the anaerobic digestion "treatment" unit. The liquid in the Digester Tank is undergoing anaerobic digestion and is a high-strength wastewater.

There is no form of designed secondary containment constructed around the two (2) tanks, though the adjacent elevated railway will prevent a westerly flow direction. A stormwater detention basin with volumetric capacity of 659,647-gallons is located at the southeast corner of the facility that could be expected to collect and temporarily store at least some portion of the spilled volume from the outdoor tanks. The detention basin does not have sufficient capacity to be used as full secondary containment for the 1,680,000-gallon Digester Tank. Further, while facility grading generally directs flow towards the on-site catch basins and southerly into the detention pond, overland flow to the north and east may be expected. In the event of a catastrophic release from either of the two (2) tanks, the proximity of the tanks to the neighboring property and the lack of a diversionary structure along the northern property boundary is expected to result in an off-site impact. All released liquid is not likely to be captured by on-site sewers and directed to the

stormwater pond. An evaluation of the expected extent of impact and general response actions in the event of a release is provided below.

Due to the deficiency in secondary containment, the facility should include necessary actions to be undertaken in the event of any spill. At a minimum, facility personnel will be trained in emergency response operations per 29 CFR 1910.120(q), and spill response equipment/supplies should be maintained on-site that are sufficient to address small-volume releases. The facility will also need to rely upon an emergency response contractor/s to handle a release (likely of any volume). Entering into a contractual agreement with an emergency response contractor is recommended. Such a contractual agreement will ensure definite response with sufficient equipment in the event of a release and will provide the facility with a listing of available equipment and costs.

TYPICAL RELEASE SCENARIO

The most typical releases that would be expected at this facility are minor spills/leaks from drums/totes and/or drips/spills during transfer operations. Each of these releases would be contained by the confines of the Processing Building and would be addressed via prompt response by on-site personnel utilizing spill supplies and/or by engaging the emergency response contractor.

For the outdoor tanks, the most likely release scenario would be the result of a tank overflow of an estimated 1,000-gallons. The liquid levels in the tanks are continuously monitoring, and transfers are controlled by the SCADA system. If a tank were to overflow, it would be expected to be the result of biological activity (upset conditions) that entrains gases and increases the absolute stored liquid volume, most commonly caused by overfeeding (too many calories too fast). Both tanks are connected to the overflow sump with 3,000-gallons capacity, so no release should occur. If this situation were to occur at a time when the overflow sump were already at 100% capacity (a highly unlikely scenario, as the overflow sump discharges liquids back to the liquid receiving tanks), the excess liquids releases from the overflow sump would be expected to spread laterally across the ground and then flow with the engineered grading of the facility towards on-site storm sewers that discharge into the on-site stormwater detection pond. The pond has sufficient capacity to address

the entire 1,000-gallons, though it would be expected that some portion of the released liquids would infiltrate into the unpaved ground that surrounds the tanks and sump. On-site spill supplies and the emergency response contractor would be engaged to address the release. No off-site impact to sewers or property are expected in the event of a typical release scenario.

CATASTROPHIC RELEASE SCENARIO

Impacts to the Site and Off-site Combined Sewers/Southern Adjacent Properties

A catastrophic release from the outdoor tanks may occur from intentional draining as malicious activity, unauthorized access, a terrorist attack on infrastructure, or complete tank failure and rupture. In the event of a catastrophic release from the 320,000-gallon Biomass Equalization Tank, the on-site detention basin (659,647-gallons capacity) could provide complete containment for 100% of the volume plus sufficient additional freeboard to account for the 25-yr, 24-hr storm (5.7-in). The grading of the facility generally directs flow towards the stormwater catch basins that connect to the on-site stormwater sewer system which directs flow into the detention basin. The detention basin cannot be used as full secondary containment for the 1,680,000-gallon Digester Tank, as the pond does not have sufficient capacity. The detention basin is also designed with an overflow that releases into the combined sewer system when the pond exceeds retention capacity. Thus, a catastrophic release from the Digester Tank should be assumed to be a potential slug discharge to the off-site combined sewer system. Further, in the event of a catastrophic release, overland flow to the north and east is to be expected; all liquid released is not expected to flow into the on-site sewer system or flow overland to the south and into the detention basin.

Using an estimate that 45% of a catastrophic release from the Digester Tank (i.e., 756,000-gallons) flows into on-site sewers and subsequently into the stormwater detention basin, 96,353-gallons of liquid released may be expected to enter into the MWRD combined sewer system and/or overflow the detention pond and continue southerly onto adjacent off-site properties to the south (the adjacent roadway, Mahalia Jackson Park, and/or the church across the street). Any unauthorized slug discharge to MWDR will result in release reporting, post-release sampling, and post-sampling reporting, as well as likely fines and/or additional User Charge. A release that results in a discharge into the sewer system will require notification to the MWRD within 24-hrs.

For liquids that flow off-site to the south, response operations can be expected to include liquid recovery by vacuum trucks and/or pumping into frac tanks and general cleaning operations. Cleaning out of sewers in the immediately surrounding vicinity would also be a possible requirement.

For the 659,647-gallons "contained" within the detention pond, the facility will, at best, recover the released liquid, process it through the digester, and perform controlled discharge to the sanitary sewer via the facility's Discharge Authorization. Otherwise, recovered liquids will have to be removed by vacuum truck and shipped off-site for disposal. Assuming recovery by 5,500-gallon tanker trucks, 120 truckloads of liquid will require to be shipped. Notification to the City of Chicago as the Local Emergency Planning Committee would likely be required for any release that results in off-site flow. As the liquids are not hazardous materials, chemicals with reporting quantities, or petroleum oils, notification to the Illinois Emergency Management Agency should not be required unless directed by an authority or agency.

Impacts to North Adjacent Site

While the facility is generally designed to direct all surface flow to on-site stormwater sewers that discharge into the detention basin, any release from either tank will result in at least some volume of off-site spill onto the property to the north because the surface grading along the northern property decreases from an elevation of 17-ft City of Chicago Datum (CCD) at the tanks to 14-ft CCD at the property boundary, and there is no diversionary structure along the northern property boundary. An estimated 40% of the catastrophic release from the Digester Tank (i.e., 672,000-gallons) may be expected to flow northerly onto the off-site property. Based upon the topography and development of the properties to the north, that volume may be assumed to potentially reach West 81st Street, roughly 650-ft north of the facility property boundary. A spill of this extent will definitely impact the adjacent, unpaved property to north, with possible impact to the ComEd substation and City of Chicago roadway further north than the adjacent property. An unknown portion of the spilled liquid would infiltrate the unpaved surface (either dirt or compacted stone) that extends to West 81st Street, while other portions would pool in limited low lying areas (most of the adjacent land is essentially flat). Response operations can be expected to include liquid recovery by vacuum trucks and/or pumping into frac tanks and general cleaning

operations. Excavation of surface soil that have been saturated from the release may also be required if directed by the City of Chicago, other regulatory agency, or property owner. Feedstock and digestate liquids are non-toxic organics and would primarily apply nitrogen and phosphorus to the impacted soils much like a liquid animal manure. No long-term impacts to the soils on the northern adjacent site would be expected, and as such, the soil could be left in place and not have any detrimental impact on the environment. Short term nutrient runoff from subsequent rain events would be contained in the combined sewer and will not impact the waters of the state.

Impacts to East Adjacent Properties

Off-site flow to the east is also likely, with the eastern entrance at an elevation of 14-ft CCD. An elevated railway located approximately 250-ft to the east of the eastern property boundary would limit the flow to the east. It is assumed that the remaining 15% of the total volume released and not otherwise diverted to the on-site storm water detention pond or flow onto the northern adjacent property (i.e., 252,000-gallons) will flow off-site to the east. Similar to any release to the north, an unknown portion of the spilled liquid would infiltrate the unpaved surface (either dirt or compacted stone) and/or pool in limited low-lying areas. Response operations to address easterly off-site flow may be expected to include the same liquid recovery and general cleaning operations, as well as any agency required excavation actions.

APPENDIX E
FACILITY INSPECTION FORMS

DRAFT

©2022, DAI Environmental, Inc.

Monthly Facility Inspection Log

Date of Inspection: _____

STORAGE/TRANSFER AREAS	Tanks/ Containers Exterior	Spill Containment Equipment	Supports, Cradles	Piping/ Hoses	Connections/ Valves	Secondary Containment Condition	Containment Drainage Needed	Spillage Observed	Housekeeping/ Signage	# Drums	Comments
Tanks											
T-050A (30,000-gal liquid food waste/FOG/rinse water)											
T-050B (30,000-gal liquid food waste/FOG/rinse water)											
Tanker Truck Tranfer Area											
T-065A (5,500-gal food waste slurry)											
T-100 (320,000-gal food waste slurry)											
T-105 (1,680,000-gal digestate)											
T-205 (30,000-gal digestate)											
T-250A (30,000-gal filtrate)											
T-250B (30,000-gal filtrate)											
T-400A (55-gal glycol)											
T-400B (238-gal glycol)											
Unregulated Tanks: Inspection not required; complete if necessary											
T-210A (14,000-gal empty)											
T-210B (2,000-gal water with diluted polymer)											
T-210C (14,000-gal empty)											
T-251 (30,000-gal empty)											
Drum Storage Areas											
Oil, small-volume containers (<55-gal) - Processing Building											
Used oil drums (55-gal) - Processing Building											
Ethylene glycol totes (275-gal) - Processing Building											
Used glycol drums (55-gal) - Processing Building											
Undiluted polymer/mineral oil emulsion totes (275-gal) - Processing Building											
Transformers											
Pad-mounted, west											
Pad-mounted, north											
Other Areas/Facility General/Process Equipment											

Monthly Facility Inspection Log

Date of Inspection: _____

STORAGE/TRANSFER AREAS	Tanks/ Containers Exterior	Spill Containment Equipment	Supports, Cradles	Piping/ Hoses	Connections/ Valves	Secondary Containment Condition	Containment Drainage Needed	Spillage Observed	Housekeeping/ Signage	# Drums	Comments

Indicate as Adequate = YES or Not Adequate = NO

NOTE - Add comments as necessary (e.g., damage, vegetation, maintenance requirements, spills, valves, fill port locks, etc.)

Inspector: _____

Daily Tank Inspection Log

1. Check tanks for leaks, specifically looking for:
   drip marks, discoloration of tanks, puddles containing spilled or leaked material
   corrosion, cracks, and localized dead vegetation.

2. Check foundation for:
   cracks, discoloration, puddles containing spilled or leaked material
   settling, gaps between tank and foundation, and damage caused by vegetation roots.

3. Check piping for:
   droplets of stored material, discoloration, corrosion, bowing of pipe between supports;
   evidence of stored material seepage from valves or seals, and localized dead vegetation.

Inspector	Tank	Date	Comments

COPY AS NEEDED **Maintain for a period of at least 3-years**

Daily Secondary Containment Checklist

1. Dike or berm system.
   Level of precipitation in dike/available capacity, Operational status of drainage valves, Dike or berm permeability, Debris, Erosion, Permeability of the earthen floor of diked area, and Location/status of pipes, inlets, drainage beneath tanks.

2. Secondary containment
   Cracks, Discoloration, Presence of spilled or leaked material (standing liquid), Corrosion, and Valve conditions.

3. Retention and drainage ponds
   Erosion, Available capacity, Presence of spilled or leaked material, Debris, and Stressed vegetation.

Inspector	Containment Area	Date	Comments

COPY AS NEEDED **Maintain for a period of at least 3-years**

FACILITY RESPONSE EQUIPMENT CHECKLIST

Check Response Equipment for the following:

1. Inventory (item and quantity);
2. Storage location;
3. Accessibility (time to access and respond);
4. Operational status/condition;
5. Actual use/testing (last test date and frequency of testing); and
6. Shelf life (present age, expected replacement date).

Please note any discrepancies between this list and the available response equipment.

Equipment Inspected	Inventory (Quantity)	Access Time	Storage Location	Operational Status	Last Test/ Test Frequency	Shelf Life	Other Comments

Inspector's Signature: _____ Inspection Date: _____

COPY AS NEEDED **Maintain for a period of at least 3-years**

APPENDIX F
TRAINING AND TESTING LOGS

DRAFT

©2022, DAI Environmental, Inc.

SPCC ANNUAL REVIEW LOG

The following employees have reviewed and been trained on the details of this SPCC Plan.

Name	Signature	Date of Review

CERTIFICATION

Name: _____ Signature: _____

Title: _____ Date: _____

COPY AS NEEDED

This record must be maintained for a minimum of 3-years.

PERSONNEL RESPONSE TRAINING LOG/REFRESHER TRAINING LOG

The following employees have been received the necessary **minimum** response training or annual refresher training per 40 CFR 112 regulations and as detailed in Section 8.0 of the SPCC Plan.

Name	Signature	Date of Training/Refresher	Number of Hours

CERTIFICATION

Name: _____ Signature: _____

Title: _____ Date: _____

COPY AS NEEDED

This record must be maintained for a minimum of 3-years.

PERSONNEL PREVENTION TRAINING LOG/REFRESHER TRAINING LOG

The following employees have been received the necessary **minimum** spill prevention training or annual refresher training per 40 CFR 112 regulations and as detailed in Section 8.0 of the SPCC Plan.

Name	Signature	Date of Training/Refresher	Number of Hours

CERTIFICATION

Name: _____ Signature: _____

Title: _____ Date: _____

COPY AS NEEDED

This record must be maintained for a minimum of 3-years.

ANNUAL DISCHARGE PREVENTION MEETING LOG

SIGN IN SHEET

Name/Signature	Company/Position	Date of Training

Subject/issue identified	Required action	Implementation date

(Note: Required topics must include SPCC Plan.)

CERTIFICATION

Name: _____ Signature: _____

Title: _____ Date: _____

COPY AS NEEDED

This record must be maintained for a minimum of 3-years.

RESPONSE EQUIPMENT TESTING AND DEPLOYMENT DRILL LOG

Date: _____

Last Inspection or Response Equipment Test Date: _____

Inspection Frequency: _____(monthly)

Last Deployment Drill Date: _____

Response Time of Emergency Personnel: _____

Deployment Frequency: _____

Oil Spill removal Organization Certification (if applicable): _____

CERTIFICATION

Name: _____ Signature: _____

Title: _____ Date: _____

COPY AS NEEDED

This record must be maintained for a minimum of 3-years.

ATTACHMENT 16
WASTE CONTROL PLAN

WASTE CONTROL PLAN

Doc. No. MP-10

Green Era Renewable Energy & Urban Farming Campus

650 W. 83rd Street

Cook County, Chicago, Illinois 60620

Prepared By

Green Arrow Engineering

2759 Long Road

Wooster, OH 44691

REVISION LEVEL	DESCRIPTION	ISSUE DATE
R0	INITIAL RELEASE	10/7/21
R1	DEFINED ADDITIONAL TERMS. UPDATED REFERENCES.	10/25/21

Table of Contents

1.0

Introduction 1

1.1 Purpose 1
1.2 Objectives 1
1.3 Definitions 2
1.4 Facility Operations 9
1.5 Facility Access and Site Security 12

Waste Characterization 13

2.1 Authorized Solid Waste 13
2.2 Unauthorized Waste 15

Waste Storage 16

Quality Control 18

4.1 Introduction 18
4.2 Control of Unauthorized Waste 19
4.2.1 Identification and Separation 19
4.2.2 Disposal 19
4.2.3 Recordkeeping 20
4.2.4 Prevention 20
4.3 Control of Hazardous Waste 21
4.3.1 Identification and Separation 21
4.3.2 Disposal 23
4.3.3 Recordkeeping 24
4.3.4 Prevention 24
4.4 Best Management Practices 25

List of Figures

Figure 1 – Hazardous Waste Disposal Process 22
Figure 2 – Hazardous Waste Notification Process 23

1.0
Introduction

1.1 Purpose

The *Waste Control Plan (MP-10)* describes the operational procedures to preclude the acceptance of unauthorized, regulated, and hazardous solid waste at the Green Era Organics Recycling Facility.

Only authorized waste will be accepted and treated by the Green Era Facility and these procedures ensure the proper handling and segregation of unauthorized and hazardous materials transported to the Facility.

1.2 Objectives

The *Waste Control Plan (MP-10)* establishes the procedures to ensure that only authorized waste is received, handled and disposed in a proper manner. In addition, this document outlines procedures for the identification, removal, storage, and final disposal of all unauthorized waste that may be encountered during the Facility's operations. These procedures include the development of:

1. Educational materials that outline acceptable and non-acceptable materials for the Facility, as well as general protocol, procedures for receipt of materials at the Facility, and instructions for haulers arriving and departing the Facility (*see SOP-21-006 Feedstock Acceptance Guidelines*).

2. Training programs for the identification of authorized and unauthorized solid waste by employees.

3. Procedures for the removal and segregation of unauthorized solid waste from the waste stream that is to be processed by the Facility.

4. Procedures for the final disposal of the unauthorized solid waste at a disposal Facility permitted to handle the unauthorized solid waste in question.

5. Reporting procedures to document the receipt of unauthorized waste by the Facility.

6. A Facility access control plan.

1.3 Definitions

1. *Anaerobic Digestion* is a biological waste treatment process where organic materials such as food waste are stabilized in the absence of oxygen, reducing volatile solids, vector attraction, and pathogens.

2. *Authorized waste* means any solid or liquid waste that the Facility is authorized to receive for processing, transfer, or disposal under the conditions of its permits. These permits include:
   a. A Solid Waste Management Facility Permit to Operate issued by the IEPA,
   b. A City of Chicago Department of Public Health permit to operate a Class III recycling facility that accepts and processes Type B recyclables via anaerobic digestion (which is permitted as an in-vessel compost facility per City of Chicago code and IEPA regulations), and,
   c. A City of Chicago Department of Public Health permit to operate a Liquid Waste Handling Facility.

3. *Asbestos waste* means a friable solid waste that contains more than one percent asbestos by weight and can be crumbled, pulverized or reduced to powder, when dry, by hand pressure. Asbestos waste also includes any asbestos-containing solid waste that is collected in a pollution control device designed to remove asbestos.

4. *Ash* means and includes cinders, fly ash or any other solid material resulting from combustion, and may include unburned combustibles.

5. *Biosolids* means a product of the biological wastewater treatment process. During biological wastewater treatment, the liquids are separated from the solids. Those solids, which are primarily composed of dead bacterial

mass, are then treated physically and chemically to produce a semisolid, nutrient-rich product known as biosolids. The terms 'biosolids' and 'sewage sludge' are often used interchangeably.

6. *Cake* means a semi-solid mass of suspected solids ranging from 18 to 30% dry matter that are separated from liquid whole digestate during the digestate dewatering process.

7. *Class I recycling facilities* are recycling facilities which contain receptacles for the collection of Type A and Type B recyclable materials only. Manual separation only of Type A and Type B recyclable materials shall be permitted at a Class I facility.

8. *Class II recycling facilities* are recycling facilities for the collection of Type A and Type B recyclable materials only. Class II facilities may perform any activity permitted in a Class I facility and may also perform processing.

9. *Class III facilities* are recycling facilities for the collection of Type A and Type B recyclable materials only. Class III facilities may perform any activity permitted in a Class II facility and may also engage in composting.

10. *Coconut Coir* means the natural fibrous material extracted from the outer husk of coconut.

11. *Commercial/Retail Waste* includes materials discarded by stores, offices, office buildings, restaurants, warehouses, wholesale establishments, non-manufacturing activities and other similar establishments or facilities.

12. *Composting* means the biological treatment process by which microorganisms decompose the organic fraction of the waste, producing compost.

13. *Construction and demolition (C&D) debris* means City of Chicago… "Construction and demolition debris" means materials resulting from the construction, remodeling, repair and demolition of utilities, structures, buildings, and roads, including but not limited to the following: bricks, concrete, and other masonry materials; soil; rock; wood, including painted, treated, and coated wood and wood products; wall coverings; plaster; drywall; plumbing fixtures; non-asbestos insulation; roofing shingles and other roof coverings; reclaimed asphalt

pavement; glass; plastics; electrical wiring; and piping or metals incidental to any of those materials.

14. *Digestate* means the material remaining after the anaerobic digestion of biodegradable feedstock.

15. *Disposal facility* means a facility where occurs the discharge, deposit, injection, dumping, spilling, leaking or placing of any waste into or on any land or water or into any well so that such waste or any constituent thereof may enter the environment or be emitted into the air or discharged into any waters, including groundwater. As used in this definition, "disposal" includes methods of storage or treatment in which there is no certain plan to remove wastes or waste residues from the storage or treatment unit to another unit for ultimate disposal.

16. *End-Product compost* means organic material that has been processed to maturity and classified as general use compost or designated use compost in accordance with 35 IAC Part 830.

17. *Finished Product* means the dewatered digestate cake ranging from 18 to 30% dry matter that is separated from liquid whole digestate during the digestate dewatering process.

18. *Food processing waste* means waste resulting solely from the processing of fruits, vegetables, grains, dairy products, meats, and related food products. *Food processing waste* may include solids and sludges generated from food processing wastewater (i.e. spent grains, fats/greases, and Dissolved Air Flotation sludges).

19. *Food scrap* means garbage that is (i) capable of being composted, (ii) separated by the generator from other waste, including non-compostable garbage; and (iii) managed separately from other waste, including non-compostable garbage. *Food scrap* includes packaging, utensils, and food containers composed of readily biodegradable material in accordance with the ASTM D6400 standard required for use under Section 3.197 of the Illinois Environmental Protection Act, as amended.

20. *Food waste* is defined as Food Scrap and/or Food processing waste.

21. *Garbage* is waste resulting from the handling, processing, preparation, cooking, and consumption of food, and wastes from the handling, processing, storage, and sale of produce.

22. *General Use Compost* means End-Product compost which meets the standards set forth in 35 IAC Section 830.503.

23. *Hazardous waste* means a hazardous waste as defined in 415 ILCS 5/3.220.

24. *Household medical waste* means household solid waste which, but for its point of generation, would be a regulated medical waste.

25. *Household hazardous waste* means household waste which but for its point of generation, would be a hazardous waste.

26. *Household waste* means any solid waste (including garbage, trash and sanitary waste in septic tanks) derived from households (including single and multiple residences, apartment buildings and complexes, hotels, motels, and other similar permanent or temporary housing, picnic grounds, campgrounds and day-use recreation areas).

27. *Industrial process waste* means any liquid, solid, semi-solid, or gaseous waste generated as a direct or indirect result of the manufacture of a product or the performance of a service. Any such waste which would pose a present or potential threat to human health or to the environment or with inherent properties which make the disposal of such waste in a landfill difficult to manage by normal means is an industrial process waste. "Industrial Process Waste" includes but is not limited to spent pickling liquors, cutting oils, chemical catalysts, distillation bottoms, etching acids, equipment cleanings, paint sludges, incinerator ashes (including but not limited to ash resulting from the incineration of potentially infectious medical waste), core sands, metallic dust sweepings, asbestos dust, and off-specification, contaminated or recalled wholesale or retail products. Specifically excluded are uncontaminated packaging materials, uncontaminated machinery components, general household waste, landscape waste and construction or demolition debris. Also specifically excluded from this definition of *Industrial Process Wastes* are food wastes and food processing wastes such as wash/rinse waters from cleaning food storage and transportation tanks and trailers, and other wastes described in Section 2.1 of this *Plan*, which are process wastes that the Facility may accept and process.

28. *In-vessel composting* is composting which is conducted entirely within a fully enclosed container, with no opening having a dimension greater than 1/4 inch in any direction. Composting (in contrast) is an aerobic biological process used to stabilize organic wastes.

29. *Landscape waste* means grass or shrubbery cuttings, leaves, tree limbs and other materials accumulated as a result of the care of lawns, shrubbery, vines and trees, and includes any discarded fruits, vegetables and other vegetative material or crop residue generated in the care of a garden. The term "landscape waste" does not include soil other than incidental soil

(e.g., soil attached to sod or attached to other materials accumulated as a result of the care of lawns, shrubbery, vines, trees or a garden).

30. *Liquid waste* means refuse which maintains the physical state of continuous volume relatively independent of pressure and which takes the shape of its container at ambient temperature.

31. *Liquid waste handling facility* means a facility or part of a facility which receives, treats, disposes of, or otherwise manages liquid waste, liquid special waste, or liquid hazardous waste. These activities include acceptance of materials for treatment, blending and/or consolidation, or for further transfer to a waste disposal, treatment or handling facility.

32. *Municipal waste* means garbage, household waste, commercial/retail waste, institutional waste, industrial lunchroom and office waste, landscape waste, and construction or demolition debris.

33. *Non-digestible material* means the portion of a food waste that is not amenable to anaerobic digestion.

34. *Organic waste* means food scrap, landscape waste, uncontaminated wood waste or other non-hazardous carbonaceous waste, such as paper, corrugated paper or cardboard, that is collected and processed separately from the rest of the municipal waste stream.

35. *Radioactive regulated waste* means any radioactive wastes that are required to be transported and disposed of at regulated facilities as set forth by 45 ILCS 141.

36. *Recyclable* means a Recyclable material defined as follows: Recyclable material shall be categorized as Type A, Type B, Type C or Type D recyclable material and shall have the meaning ascribed to each such type, as follows:

    a. "Type A recyclable material(s)" means any aluminum or ferrous or non-ferrous scrap metal; bi-metal or tin cans; glass products; paper products; rubber; textiles; plastic products, such as polyethylene terephthalate, high density polyethylene, low density polyethylene, polystyrene or polypropylene; and any other material designated as Type A recyclable material by the commissioner in duly promulgated rules and regulations.
    b. "Type B recyclable material(s)" means organic waste, and any other material designated as Type B recyclable material by the commissioner in duly promulgated rules and regulations.
    c. "Type C recyclable material(s)" means used motor vehicles or motor vehicle parts, and any other material designated as Type C recyclable material by the commissioner in duly promulgated rules and regulations.

d. "Type D recyclable material(s)" means construction and demolition debris that does not contain lead, asbestos or any other hazardous material in such a way as to render recycling of such material illegal or impossible and that has been rendered reusable and is reused, or that would otherwise be disposed of or discarded but is collected or separated and returned to the economic mainstream in the form of raw materials or product, and any other material designated as Type D recyclable material by the commissioner in duly promulgated rules and regulations.

37. *Recycle* or *Recycling* means any process by which materials that would otherwise become municipal waste are collected, separated or processed and returned to the economic mainstream in the form of raw materials for new, reused or reconstituted products, but does not include the recovery of materials for fuel in combustion or energy production processes. This definition shall not prohibit any recycling facility from recovering and using biogas or other fuel generated as a byproduct of a recycling activity, as approved by the commissioner, while the facility is otherwise primarily engaged in recycling.

38. *Recycling facility* means any building, portion of a building or area in which Type A, Type B, Type C or Type D recyclable material is collected, stored, or processed for the purpose of marketing the material for use as a product or as raw material in the manufacturing process of new, reused or reconstituted products.

39. *Refuse* means garbage and rubbish.

40. *Regulated Medical Waste* means a medical waste as defined in 415 ILCS 5/Tit. XV (i.e., as Potentially Infectious Medical Waste).

41. *Septage* means liquid or solid material removed from a septic tank, cesspool, portable toilet, or similar system.

42. *Site* means any location, place, tract of land, and facilities, including but not limited to buildings, and improvements used for purposes subject to regulation or control by the Illinois Environmental Protection Act or regulations thereunder.

43. *Solid waste* means any type of product managed as a waste.

44. *Source-separated food waste* means any food waste that has been pre-sorted from other waste by the customer or waste generator.

45. *Source-separated organic waste (SSOW)* means readily degradable organic material that has been separated from non-compostable material at the point of generation including, but not limited to, food waste. It does not

include yard waste, landscape waste, soiled or unrecyclable paper, or biosolids.

46. *Special waste* means any industrial process waste, pollution control waste or hazardous waste, as defined in regulations issued by the Illinois Pollution Control Board.

47. *Storage* means the containment of waste, either on a temporary basis or for a period of years, in such a manner as not to constitute disposal.

48. *Transporter* means a person engaged in the off-site transportation of solid waste by air, rail, highway or water.

49. *Treatment* means any method, technique, or process including neutralization, designed to change the physical, chemical, or biological character or composition of any waste so as to neutralize it or render it nonhazardous, safer for transport, amenable for recovery, amenable for storage, or reduced in volume. Such term includes any activity or processing designed to change the physical form or chemical composition of hazardous waste so as to render it nonhazardous.

50. *Unacceptable waste (see Unauthorized Waste)*

51. *Unauthorized waste* means any waste that is not included as an authorized waste to be processed at the Facility under its permits.

52. *Waste* means any discarded or abandoned material in solid, semisolid, liquid or contained gaseous form, including, but not limited to, industrial process waste, hazardous waste, municipal waste, special waste, garbage, sludge from a waste treatment plant, water supply treatment plant or air pollution control facility, but excludes:

    a. Sewage collected and treated in a municipal or regional sewage system; or
    b. Recyclable materials managed in compliance with the provisions of Chapter 11-4 of the Chicago Municipal Code and regulations of the City of Chicago.

53. *Waste tire* means any solid waste which consists of whole tires or portions of tires.

54. *Yard Waste* means leaves, grass clippings, garden debris, tree branches, tree limbs and other similar woody materials.

1.4 Facility Operations

This site will be authorized to receive source-separated organic waste (SSOW), which as-received will contain between 5% and 10% non-digestible materials by weight. The source-separated organics may be collected from supermarkets, bakeries, restaurants, commercial food processers/manufacturers, cafeterias, schools, colleges, nursing homes, hospitals, correctional facilities, catering halls and hotels/resorts. SSOW may also be accepted from residential curbside organics collection programs that meet the separation requirements for this Facility. The non-digestible fraction will consist of old corrugated cardboard, metals, glass, rigid plastics, plastic films as well as bones and shells. A portion of the non-digestible fraction will be recyclable. The recyclable fraction may be separated for further processing. The balance of the waste that has no recyclable value or is not digestible will be compacted for landfill disposal. The digestible fraction will be separated on-site and be used as feedstock for the anaerobic digester. Plant employees will be trained in the identification and safe and proper handling of authorized and unauthorized solid waste. Full definitions of the types of waste, authorized and unauthorized, may be found in Section 1.3, above.

The Facility will also accept pumpable liquid feedstocks such as fats, oils, and greases (FOG) as collected from restaurant grease traps and commercial food processors, and food related rinse waters. Commercial food processors such as meat processors and snack food plants will separate oils and grease from wash water by means of dissolved air-flotation (DAF) which aids in the separation of the oils from the water. The skimmed greasy water from this process is typically called DAF sludge and can be processed by anaerobic digestion. Large brewers also separate solids from their wastewater prior to discharging to a wastewater plant and produce organic sludges primarily containing distiller grains that is suitable for digestion.

Many food products are also transported by rail or road in tanks. The tanks need to be washed between loads. The rinse water can be high in sugars and fats and is amenable to processing by anaerobic digestion. A comparable facility in Columbus, Ohio regularly receives water from rinsing out corn syrup rail tank cars and water with dissolved wheat flour from rinsing dry bulk trailers.

The Facility will receive 5 to 8 trucks per day delivering pumpable food wastes in tankers (averaging 13 tons per truck) and 8 to 16 loads per day of source separated food waste in compactors, roll-off containers, or 40 foot long dump trailers (averaging 12 tons per load). The Facility will remove 1 to 2 compactors a day of food waste packaging and grit to the landfill. Additionally, 2 semi-loads per day of soil amendment (a "cake" that is typically 20 to 25% total solids and is considered finished product) will be utilized on-site by the *Urban Growers Collective (UGC)* or transported to other off-site regional composters or users.

All feedstock receiving, material processing, including truck unloading/loading will be conducted in the enclosed Operations Building. The building will be maintained

at a slight negative air pressure and ventilation air will be treated through a dual-stage process consisting first of an ionization reactor followed by an activated carbon adsorption system ("guard bed"). The activated carbon adsorber will be designed to remove odors even in the absence of the ionization reactor. Fully treated exhaust air will be discharged to a stack. Air ionizer units within the building will provide in-situ treatment of the odor causing compounds. The Facility will maintain an *Odor Control Plan* that identifies potential odor sources, mitigation measures, control points, as well as an employee awareness and training program. This *Plan* also includes methodology to monitor and maintain the activated carbon guard bed.

All trucks will enter the Facility from South Wallace Street through a gated entrance. The gate will be open during daytime hours. No trucks will be allowed to queue on South Wallace Street or W. 83rd Street.

Trucks delivering non-pumpable waste in a dump trailer or roll-off container must be covered and will back through one of the solids receiving bay doors to a curbed stop at the tipping wall. The concrete floor will be striped with yellow lane markings to assist drivers with alignment. If the solids bay is occupied, additional trucks will need to park outside of the building in the designated area.

Trucks delivering pumpable food waste or F.O.G. can pull into the building through the north overhead door, closest to the digester tank. The waste materials within these trucks are enclosed within the tanker trucks, and therefore, such trucks are not potential sources of odors even if temporarily staged outside the building.

Vans delivering palletized products will back to the loading dock at the north end of the building.

After tipping, trucks that delivered non-pumpable waste will exit the bay doors and turn left to weigh across the scale and will exit at Wallace.

Liquid tankers will pull through the building and turn to the right and proceed to the scale

Trucks delivering to the Facility will have a manifest (*FORM-21-001*) with verifiable load weights or volumes with the generator(s) listed and the collection date. Every load will be accompanied by the form to meet recordkeeping requirements associated with tracking of incoming waste. All waste haulers and generators will be pre-approved by Green Era and a list of current and past customers will be maintained by the Facility and will be available for inspection by any permitting authority, (*LIST-21-001, Approved Customer List*). A list of approved feedstocks (LIST-21-002) that is cross-referenced to the generator or hauler will also be maintained by the Facility. Records of incoming waste, approved customers, and approved feedstocks will be maintained for a minimum of 3 years.

All trucks will exit the Facility at South Wallace Street.

The separated non-digestible fraction will be conveyed to stationary waste compactors that sit inside the building in the northwest corner of the building of the building.

No waste materials or feedstock will be staged, stored, or handled outside the building.

The Facility will produce a finished product (the cake created by dewatering of the digestate), which will be utilized on-site by the Urban Growers Collective or transported off-site to other end-users. At times, the dewatered digestate cake (the finished product) may be mixed with wood chips or coconut coir on site within the pole barn prior to use on-site or off-site.. The finished product cake will consist of dead anaerobic bacterial mass and plant cellulose that is not able to be decomposed further by anaerobic digestion. The odor characteristics of this material are the same or similar as anaerobically digested and dewatered municipal wastewater plant sludge cake. These solids will be separated (within the Operations Building) from the treated liquid digestate through a conventional dewatering process (belt filter press). The finished product cake will be directly loaded into semi-dump trailers or roll-off boxes inside the building

Wastewater separated from the digestate in the dewatering process will be collected in filtrate tanks. The filtrate will be pumped to the sewer through a metered force main. The wastewater discharge will be permitted through a Discharge Authorization issued by the Metropolitan Water Reclamation District of Greater Chicago.

Biogas produced by the anaerobic digestion process will be captured and refined (i.e., processed) prior to injection into the natural gas pipeline.

1.5 Facility Access and Site Security

The Facility is fully fenced and will have two vehicular access gates. The fences will be screened. The access gate from West 83rd will be used by employees and visitors. The access gate on Wallace will be used for the entrance and exit for feedstock deliveries and other heavy truck traffic. The gates will be closed off-hours, but may be accessed by calling the Plant Operator or with an access keycode.

The site will be lit at night by outdoor pole lighting and downlighting along the building perimeter.

Closed-circuit cameras will be positioned outside and inside the Facility to monitor operations on the site from a control room or remotely if needed. The camera feeds will be recorded and stored for up to 1-week on a digital recording appliance.

The Facility will be fully staffed during waste receiving hours.

All waste tipping and receiving will occur inside the Operations Building. Exterior building doors will remain locked outside of normal receiving hours. Overhead doors will only be opened when trucks are entering or exiting the Facility to mitigate fugitive odors.

2.0

Waste Characterization

2.1 Authorized Solid Waste

Source-separated food waste will be accepted by the Facility, and is any food waste that has been pre-sorted from other waste by the customer or waste generator. Usually, this term specifically refers to curbside collected household kitchen waste, restaurant waste, and grocery store waste, where a person physically handled the material and consciously separated the organics from other waste. The volume of non-digestible materials contained in the waste, such as plastic bags and food packaging, can vary widely depending on the collection methods and generator. Haulers will generally provide dedicated totes, dumpsters, or compactors for food waste collected from homes or businesses. Source-separated organic waste (SSOW) will also be accepted by the Facility and is defined as readily degradable organic material that has been separated from non-compostable material at the point of generation including, but not limited to, food waste.

Example SSOW collection tote at a farmers market (Total Organics St Louis)

Food processing waste will be accepted by the Facility. Food processing waste generated by commercial food processors is also a type of source separated waste, since it is also kept separate from other types of waste. Commercial food processors often have multiple discrete sources of bulk waste organics that cannot be sold (e.g., out of specification food products).. Types of businesses in this category include commercial bakeries, canners, brewers, snack food fryers, pasta companies, dairies, and meat packers. Pet food manufacturers also produce waste that would be suitable for anaerobic digestion. Prior to accepting bulk waste from any commercial food processors, Green Era will complete a *Waste Generator Survey* (*FORM-21-007*) with the generator that includes a description of the process that generates the waste, the typical quantity, handling characteristics, odor profile, transportation options, and characteristic energy and nutrient values based on laboratory analysis. A large fraction of available commercial food waste is pumpable and will be hauled in closed tankers. Examples of pumpable commercial food waste include wash/rinse water from cleaning food storage tanks and trailers, whey, liquid ice cream mix, end of batch soups, sauces and syrups, and separated and thickened scum and solids from plant wash water. Other non-pumpable food waste may be transported in compactors or tarped dump trailers.

Packaged food waste may also be processed by this Facility. Packaged food waste are any foods contained within consumer packaging. Examples of packaged food waste include beverages or soup in cans, milk or juices in plastic jugs, bottles or cartons, and single serving condiment packs. This type of food waste is usually generated because of product changeover on a packaging line, mislabeling, underfills/overfills, failed quality checks, past sell-by date product, damaged containers, and recalled product. At the Facility, the packaging will automatically be separated from the organic product by a separation mill, which is a specialized type of hammermill built for this application.

Fats, oils, and grease (FOG) are other food wastes that will also be accepted. This type of pumpable food waste is collected from grease traps at restaurants and food processors. FOG waste is currently accepted by some municipal wastewater treatment facilities. Green Era will provide haulers with education materials on the collection of FOG for this Facility. They will be prohibited from collecting and mixing grease trap waste from car washes, car garages, industrial customers, or from other non-food processing establishments.

	TS (%)	VS (%)	COD (mg/l)	pH	TKN (mg/L)
Source Separated Organics	20 - 30	85 - 94	200,000 - 300,000	4 - 7	4000 - 9000
FOG (grease trap, not dewatered)	2 - 5	88 - 92	20,000 - 70,000	4 - 5	500 - 1000
Pumpable Food waste	3 - 8	85 - 90	60,000 - 200,000	3 - 8	1500 - 2000
Mixture	12 - 14	88 - 90	125,000 - 200,000	3 - 5	2000 - 3000

Typical Feedstock Parameter Ranges

Source-separated food waste will contain non-digestible material such as plastic bags, food containers, and packaging products. Typical components of this non-digestible material include steel and aluminum cans, PET bottles, corrugated cardboard, plastic and stainless cutlery, disposable plates and trays, and all types of plastic containers. Food waste can also contain bones and shells, fruit pits/seeds/hulls, sand, and grit that will not be decomposed by the digester. The feedstock as received is expected to contain up to 12% non-digestible material by weight, and average 6% non-digestible material across all waste streams. The processing system is designed to remove non-digestible material, typically food packaging and collection bags, from the received feedstocks prior to digestion. No unseparated municipal solid waste or unseparated household waste will be accepted by this facility. The food waste will invariably contain some atypical non-digestible material that has been improperly disposed of by the generator. The Facility will implement operating procedures for identifying, handling, and segregating unexpected items in a manner that will not damage equipment and lead to unplanned downtime. Much of this type of non-digestible material can be limited by regularly educating the haulers and the generators on the acceptable types of waste and how the waste will be processed. Container labeling and controlling access to the waste dumpsters will also mitigate the level of unauthorized disposal of non-digestible materials. Large bulky items can be identified by visual inspection and removed prior to processing, such as wooden pallets, old tires, or C&D debris. Waste loads that appear to have a large amount of undesired material may be rejected by the Facility and sent to the landfill or alternatively dumped into a segregation area and manually sorted before loading into the waste receiving hoppers with a wheel loader. Waste can be tipped on the receiving floor in front of the tipping wall to the east of the receiving bin. Free liquids will be collected in the trench drain and will be pumped from the lower-level sump to the liquid receiving tanks. Any waste tipped on the floor will be sorted and loaded into the live bottom hopper for processing the same day. No uncontained bulk organic waste will be stored on the tipping floor. Non-hazardous separated bulk materials can be loaded into the trash compactors or kept separate for recycling.

2.2 Unauthorized Waste

The following unauthorized waste is not accepted for processing at the Green Era Facility: Hazardous waste, Special waste, biosolids, septage, landscape waste, yard waste, land clearing debris, asbestos waste, ash, construction and demolition debris, unseparated municipal solid waste, unseparated household waste, industrial process waste, regulated medical waste, radioactive waste, and waste tires.

3.0

Waste Storage

All unprocessed waste will be stored within the Operations Building either in the liquid feedstock receiving tanks, the solids receiving hopper, or as packaged and palletized product. The solids receiving hopper will normally be fully emptied each day. No waste will be stored or processed outdoors. Separated non-digestible materials and grit will be loaded into two 40 CY enclosed compactors that will be located and operated inside the building. Compactor boxes will be exchanged when full and taken directly to the landfill for disposal after loading onto the truck.

Tanker trucks bringing FOG or other pumpable liquid feedstock can discharge directly to 60,000 gallons of combined liquid underground storage (T-050A, T-050B) or FOG may be pumped directly to the biomass tank (T-100). The trucks will be unloaded within the Operations Building. The biomass tank (T-100) has a working volume of 320,000 gallons. At an average of 50,000 gallons per day of pulped and blended feedstock, the biomass tanks have over 6 days of total hydraulic storage capacity. But it should be noted that the Facility always has the option to not accept material brought to the Facility, and therefore, there is no feasible occurrence where the rate at which the Facility receives material exceeds the storage capacity or the processing capacity. The head space of the below slab tanks in the building are connected to the ventilation fan header. The header will operate at a slight vacuum. Odorous air and vapors displaced during tank filling will be treated in the ionization reactor within the building and then further treated by the activated carbon "guard bed" prior to discharge from the building. An Odor Control Plan that includes a monitoring and maintenance plan for the odor control equipment has been developed and is a companion document to this Waste Control Plan.

The digester will be operated at 1.5 million gallons, which represents a hydraulic retention time of 30 days at 50,000 gallons per day. The full volumetric capacity of the digester tank is 1.68-million gallons.

The digested sludge will be dewatered inside the building on a belt press and the finished product cake will be directly loaded onto a semi dump trailer during dewatering operations inside the Operations Building. For reference, the dewatered digestate (finished product cake) have the characteristics of dewatered biosolids

generated by anaerobic digestion of municipal wastewater sludges, and will meet the requirements for General Use compost.

The trailer will remain parked in the building until it can be transported off-site or to the on-site pole barn for temporary staging and possibly mixing (in the pole barn) with wood chips or coconut coir, and then subsequently used at a UGC farm or other end-user as a soil amendment for growing vegetables and fruits. Full trailers may also be held in the building for up to one-day in the adjacent truck bay until it can be taken to a farm. Full trailers held in the building will be fully tarped. Up to 50 CY of cake solids may be held in the building for up to 24-hours.

4.0
Quality Control

4.1 Introduction

Haulers and generators will be pre-approved by Green Era for waste acceptance. For all loads, manifest paperwork (*FORM-21-001*) attesting to the generator, waste origin, and composition must be presented to the attendant on the tipping floor before being permitted to dump. Source-separated food waste loads will first be visually inspected by the attendant prior to tipping. If any unauthorized waste is spotted the entire load will be reject prior to tipping. After given the authorization to tip, the attendant will look for any gross signs of unauthorized waste in the live bottom receiving hopper. If unauthorized waste is found in the load, the waste will be removed and segregated prior to processing. Lock-out tag-out procedures and other safety measures will be observed during separation of waste that has already been tipped. Bulk unauthorized waste may need to be mechanically removed with an excavator. The hauler and generator will be informed of the unauthorized waste and the event recorded.

Liquid wastes could also contain unauthorized materials that may not be apparent from visual inspection. Anaerobic digestion, like other biological processes, can be affected by concentrations of metal salts and chemicals that are toxic to the bacteria. The Oxidation Reduction Potential (ORP) can be quickly measured to determine if the liquid waste contains concentrations of an oxidizing liquid, such as bleach, that would be harmful to the bacteria. The ORP of incoming FOG loads will be spot checked for high ORP values, greater than 150 mV. The ORP measurement will not guarantee that the load is safe. Additionally, pH and temperature may also be measured and recorded. Color and odor can be used to disqualify a load. The presence of solvents or petroleum distillates should be observable from the odor. Off colors from unknown origins may also be reason to reject loads. New single source liquid food waste will be checked and pre-approved based on laboratory testing for chemical oxygen demand (COD), waste composition description, and nutrient analysis. Biogas methane potential laboratory testing may also be conducted to further determine the waste's suitability for digestion. Loads may be spot checked throughout the year to test for deviation from the norm. The COD of combined and

blended feedstock will be checked bi-weekly to determine the caloric value of the feedstock to prevent "overfeeding" the digester. Process monitoring and testing is further described in the Engineering Report (MP-02).

During the plant commissioning period and when receiving new types of feedstocks work instructions will be developed for the Facility that describe the procedure for handling specific types of waste and testing protocols. The work instructions will be maintained and updated by the Plant Manager and Plant Engineer.

Work instructions will be controlled documents with revision level tracking and ownership information. Current work instructions will always be accessible to employees through electronic viewers/devices. Work instructions will be reviewed during employee training.

4.2 Control of Unauthorized Waste

This section defines the procedures that the Facility will employ to ensure that unauthorized waste will be detected and segregated from the authorized waste stream to preclude its processing by the anaerobic digester.

4.2.1 Identification and Separation

All incoming loads will first be visually inspected upon arrival. The tipping floor attendant will look for any gross signs of unauthorized waste. If unauthorized waste is found in the load, the Plant Manager will be notified. If the unauthorized waste is non-classified waste or contains large quantities of non-digestible material, the waste will be placed into a bin for subsequent handling, either combined with the other waste to be shipped off-site for landfill disposal or specifically handled in compliance with applicable State and Federal regulations. If the waste type is unknown or determined to be classified as hazardous, the waste will be removed and segregated and placed in a designated potentially hazardous waste storage area for subsequent characterization. The hauler will be informed of all types of unauthorized waste. Both the hauler and generator will be contacted to ensure that their employees fully understand the Facility's waste disposal requirement and the event will be logged (see below).

4.2.2 Disposal

Green Era will engage, or if required, enter into a contractual arrangement with, a hazardous material waste management company to collect from the Facility any unauthorized Special or Hazardous waste that is received by the Facility. All other

unauthorized waste (e.g., commercial waste, plastics, waste tires) received at the Facility will be transported to the appropriate permitted waste disposal facility for final disposal by a licensed (as applicable) hauler. Should Green Era encounter an unauthorized waste that it or it's contracted hazardous material hauler cannot transport to its final disposal facility, Green Era will immediately notify the Chicago Department of Public Health to identity a transporter who is permitted to dispose of the waste in question. Upon the identification of the appropriate transporter, Green Era will immediately contact the transporter and make the necessary arrangement to have the waste removed from the Facility. At no time will unauthorized waste remain at the Facility longer than 90 days.

4.2.3 Recordkeeping

All incidents involving the discovery of unauthorized waste will be immediately entered into the Unauthorized Waste Log (*LOG-21-006*). The entry will include the type of unauthorized waste, its source, quantity, and disposition. On disposal of the unauthorized waste, a notation will be made in the Facility log indicating that the waste was disposed. This notation will include the manifest or weight ticket number so that the disposal documentation can be easily recovered from the files. A copy of the manifest or weight tickets indicating that the unauthorized waste was properly disposal of will be submitted as an Attachment to the Facility's Quarterly Report with Chicago Department of Public Health. All documentation will be maintained for a minimum of 3 years.

4.2.4 Prevention

To prevent the disposal of unauthorized waste at the Facility, Green Era has developed the following procedures.

Green Era has prepared a letter/flyer to be provided to all contractors that enter into a contract with Green Era for disposal at the Facility (see *SOP-21-006*, *Feedstock Acceptance Guideline*s). The document outlines all of the materials that are authorized to be received by the Facility under its Permits. It also indicates those materials that are not authorized to be received.

4.3 Control of Hazardous Waste

This section defines the procedures that the Facility will employ to ensure that hazardous or any other unauthorized wastes will be detected and segregated from acceptable waste stream to preclude its disposal at the Facility.

4.3.1 Identification and Separation

All incoming SSO loads will first be visually inspected at the tipping wall within the Operations Building after dumping by the floor attendant for any gross signs of hazardous waste. If hazardous waste is found in the load, the Plant Manager will be notified and the waste will be removed and segregated into a separate hazardous waste storage area. The hauler will be informed of the hazardous waste, the contractor will be contacted to ensure that such contractor fully understands the Facility's waste disposal requirement, and the event will be recorded (see below).

The Plant Manager will then notify the Chicago Department of Public Health. By email to EnvWastePermits@cityofchicago.org (as required by the CDPH Permit).

See the diagrams below for the process regarding the identification and segregation of hazardous materials, as well as notification procedures.

Figure 1- Hazardous Waste Disposal Process

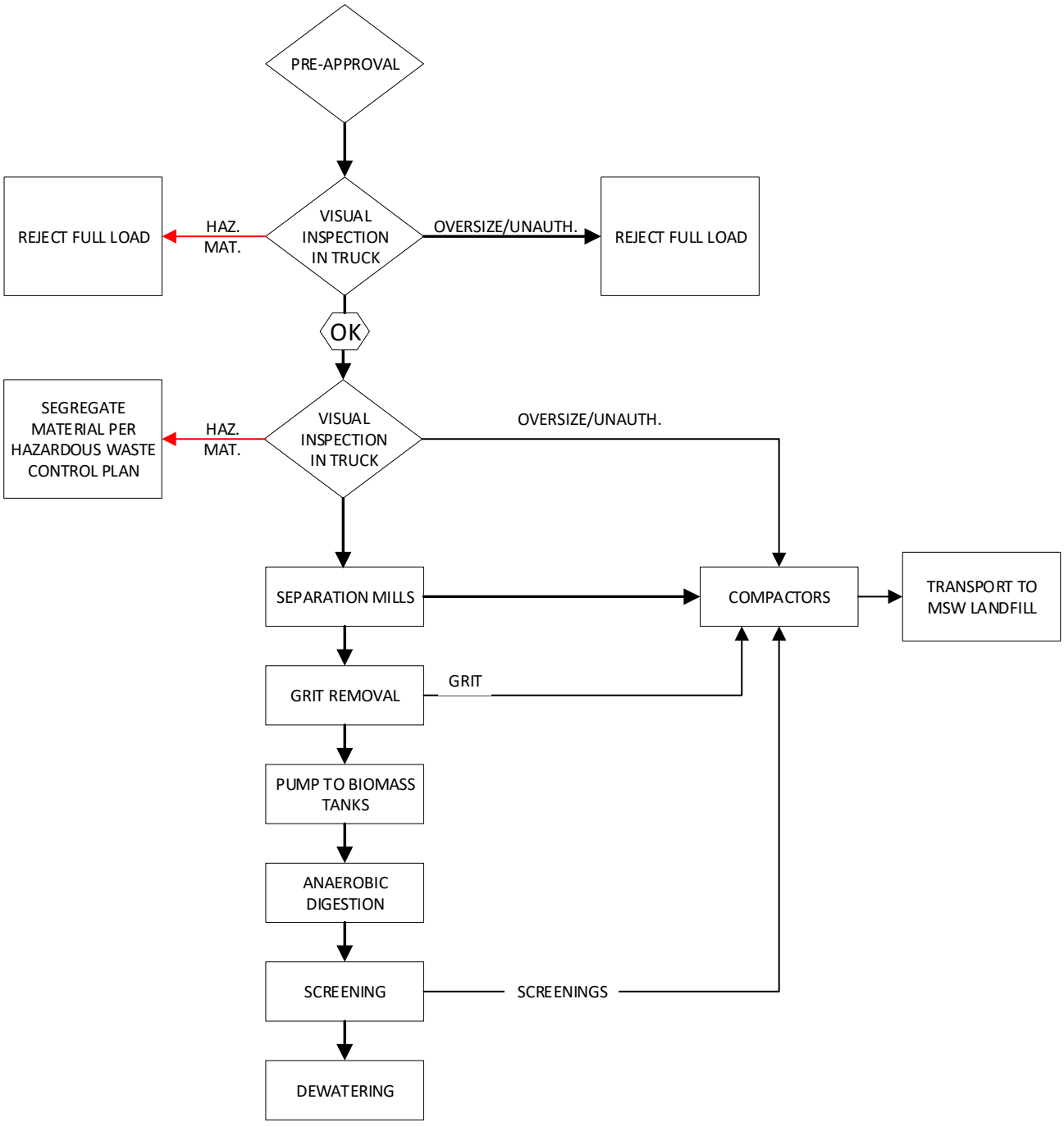

Figure 2 – Hazardous Waste Notification Process

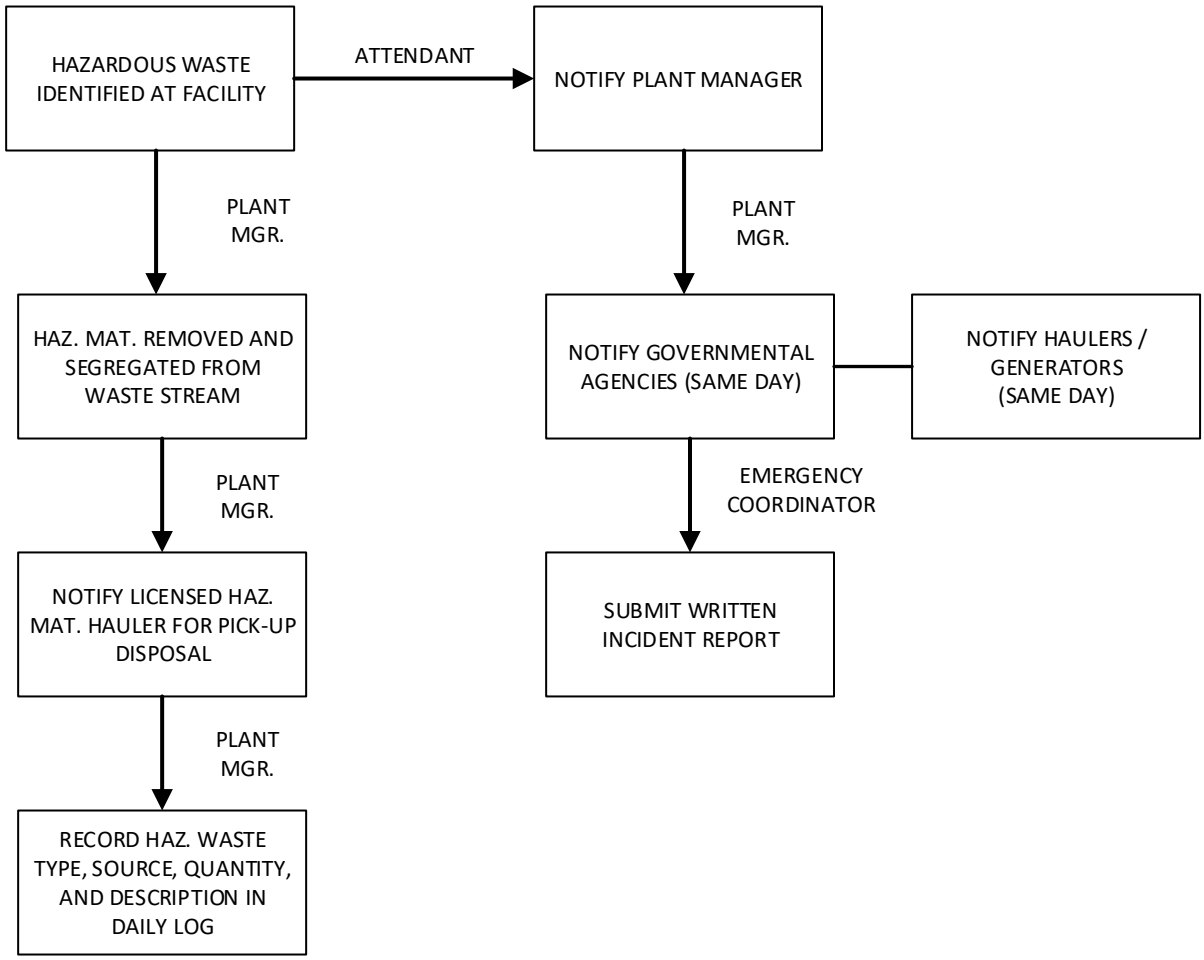

4.3.2 Disposal

Green Era will engage, or if required, enter into a contractual arrangement with, a hazardous material waste management company to collect from the Facility any unauthorized Hazardous waste that is received by the Facility. At no time will unauthorized waste remain at the Facility longer than 90 days. Hazardous waste will be segregated from both authorized and unauthorized waste in a separate area located near the screening press. If Green Era encounters a hazardous waste that the hazardous material waste management company engaged by Green Era cannot transport to its final disposal facility, Green Era will immediately notify the Chicago Department of Public Health to identify a transporter who is permitted to dispose of the waste in question. Upon the identification of the appropriate transporter, Green Era will immediately contact the transporter and make the necessary arrangements

to have the waste removed from the Facility. At no time will hazardous waste remain at the Facility longer than 90 days.

4.3.3 Recordkeeping

All incidents involving the detection of hazardous waste will be immediately entered into the Facility's Unauthorized Waste Log (LOG-21-006). The entry will include the type of hazardous waste, its source, quantity, and disposition. Upon disposal of the hazardous waste, a notation will be made in the log indicating that the waste was disposed. This notation will include the manifest number so that the disposal documentation can be easily retrieved from the files. A copy of the manifest indicating that the hazardous waste was properly disposal of will be submitted as an attachment to the Facility's Quarterly and Annual Reports. All documentation will be maintained for a minimum of 3 years.

4.3.4 Prevention

To prevent the disposal of hazardous waste at the Facility, Green Era has developed the following controls.

Green Era has prepared a letter/flyer to be provided to all contractors that enter into a contract with Green Era for processing at the Facility (see SOP-21-006, Feedstock Acceptance Guidelines). The document outlines all of the materials that are authorized to be received by the Facility under its Chicago Recycling Permit, Chicago Liquid Waste Handling Facility Permit and IEPA Solid Waste Facility Permit. It also indicates those materials that are not authorized to be received.
.

4.3.5 Employee Training

All personnel involved in waste handling will be trained in identifying hazardous wastes in accordance with ILAC Title 35 Part 721, *Identification and Listing of Hazardous Wastes*. This Part includes the definitions of what constitutes hazardous materials and waste and the criteria for identifying the characteristics of hazardous waste.

In addition, all management personnel who will be assigned to the unloading area of the within the Facility and Plant Manager/Emergency Coordinators will attend an OSHA 24-hour Hazardous Waste Operations And Emergency Response (Hazwoper)

Training Program in accordance with 29 CFR 1910.120, and any refresher courses, as required.

This management plan and referenced documents will be explained and reviewed in detail with new employees in accordance with the Personnel Training Plan (MP-04).

4.4 Best Management Practices

Operations will be contained within the Operations Building to control noise, odor and dust associated with the processing of waste. During normal operation, waste will be received and processed in the same day. The processing equipment will be rinsed with water at the end of the shift to minimize odor generation and vector attraction.

Good housekeeping practices will be adopted to minimize odors throughout the Facility. All SSO handling stations and equipment will have washdown hoses nearby to allow for the machines to be cleaned daily. Self-recoiling hose reels will be used wherever practical. Catwalk access, equipment placement, drainage, building materials, and general design will all be assessed during planning to enable easy maintenance and cleaning of all plant areas. Green Era recognizes that keeping the equipment and building clean and free of organics will be critical to maintaining a comfortable and safe working environment.

All roadways to the Operations Building will be paved for truck and vehicular traffic to prevent dirt and waste from being carried into and out of the tipping floor on truck and equipment tires. Waste received at the Facility in dump trailers will be tipped directly into a live bottom receiving hopper, which will prevent the trucks from driving through waste or waste liquids. Drivers will be encouraged to rinse-off the truck tail gates and mud flaps after unloading. Garden hoses will be provided near the tipping wall for the drivers' use.

WASTE CONTROL PLAN (MP-10) APPENDIX A
SOP-21-006

Green Era	**Standard Operating Procedure** **Feedstock Specifications**	SOP-21-006 Revision: 1 Effective: 10/27/21 Reviewed: 10/27/21

GREEN ERA ORGANICS RECYCLING FACILITY AT 650 WEST 83RD

The Green Era Organics Recycling Facility will receive 80,000 tons of locally collected food waste per year. The food waste delivered to Green Era will be automatically processed to remove packaging such as plastic bags, metals, and rigid plastics from the biodegradable material. The cleaned food waste pulp will then be treated in an anaerobic digestor. This process produces renewable natural gas that will be received by People's Gas. The digested pulp is separated into compostable solids and water. The water is discharged to the City of Chicago sewer for final treatment at the Stickney Water Reclamation Facility. The compostable solids will be used by Urban Growers Collective to support their 8 existing urban organic farms that supply locally grown produce to Chicago's South Side and are a model of innovative community based agriculture.

POTENTIAL GENERATORS

- Supermarkets
- Restaurants/Diners/Delis
- Bakeries
- Cafeterias/Commissaries
- Schools
- Nursing Homes
- Hospitals
- Correctional Facilities
- Hotels/Resorts
- Breweries
- Food Manufacturers
- Residential curbside organics collection

TYPES OF WASTE ACCEPTED AT GREEN ERA

Food waste, including normal packaging (e.g., plastic bags, aluminum and steel cans) will be accepted. Dumpsters/loads must not contain more than 10% contaminants (no less than 90% food waste). The following are materials that will be accepted for organics recycling:

- Food Waste
- Grease Trapping Waste (Fats, oils, and grease from restaurant and food service grease traps)
- Industrial Food Processing waste (commercial bakeries, breweries, meat processors)

CONTAINERS AND PACKAGING

Food waste packaging including metal cans, plastic bags, foil lined paperboard, food soiled paper, and other general packaging is acceptable.

TYPES OF WASTE NOT ACCEPTED AT GREEN ERA

General Waste

- Household Waste
- C&D Debris
- Yard Waste
- Electronic Waste

Hazardous Waste

- Cleaning Agents
- Chemicals
- Medications/Medical Waste
- Batteries
- Pesticides

Other Waste

- Pet Waste
- Diapers

GENERAL PROTOCOL

- Do not mix loads from approved generators/sources with waste from unapproved sources
- Do not combine FOG with sanitary (septic) waste
- Do not mix loads of commercial food waste with household MSW that are coming to the facility

RECEIPT OF MATERIALS AT GREEN ERA

- Waste materials to be brought to Green Era shall not be collected from unauthorized businesses/generators
- The facility is open for waste deliveries Monday through Saturday between 6:00 AM and 4:00 PM
- Before or after-hour queuing on Wallace, W. 83rd, or any other surrounding public/private street is prohibited
- Loads coming into the Green Era Facility must be adequately covered or enclosed
- Trucks delivering putrescible waste must maintain door/gate/valve seals so that no leakage occurs onto public roadways
- Green Era will not accept haulers that do not comply with this protocol and these rules or appropriate CDOT regulations, including traffic laws

INSTRUCTIONS UPON ARRIVAL AND DEPARTURE

- Upon entering the Green Era Facility:
  - Enter the Green Era facility at the Wallace Street gate
  - Turn left towards the main building.
  - If delivering solids material, back thru the overhead bay door to the tipping wall, when instructed to proceed by the attendant.
  - If delivering pumpable food waste, pull thru the north bay door and park in the building near the liquids receiving tanks.
- Upon entering the Operations Building:
  - The operator will close the bay door after entering the building.
  - The floor attendant will provide authorization to tip the load into reception pit after receiving the waste manifest and visually inspecting the load.
  - Tanker trucks bringing fats, oils or grease or other pumpable liquid feedstock will unload through a hose to the liquid receiving tank. After providing the waste manifest to the plant attendant, connect the tanker drain nozzle to the hose at the designated tank and proceed to off-load when instructed.
- Upon Exiting the Operations Building:
  - Rinse off beds/tailgate while inside building, if necessary
  - Pull forward toward the bay door, which will open automatically as the truck approaches and close once the truck clears the doorway
  - Proceed to the Wallace Street Gate to exit the facility.

Green Era

Location: 650 West 83rd Chicago, IL 60620

operations@greenerachicago.com

https://www.greenerachicago.com/

WASTE CONTROL PLAN (MP-10) APPENDIX B
FORMS

Green Era	**Feedstock Manifest Form**	FORM-21-001 Revision: 0 Effective: 10/02/21 Reviewed: 10/02/21

General Feedstock Manifest Form that may be provided to generators or haulers that do not have manifests that are complaint with Green Era SOP-21-007.

Green Era Feedstock Manifest #_____

Date _____ **Time of Pickup** _____

Generator _____ **Generator Contact** _____

Street Address _____ **City, State** _____

Phone No _____

Hauler Company _____ **Truck No** _____

Truck Driver Name _____ **Trailer No** _____

Description of Load _____

Product Name(s) _____

Load Volume or Weight Certification

Treatment Facility

Green Era

650 W 83rd Chicago

operations@greenerachicago.com

708-792-0649

Gross Weight (lbs) _____

Tare Weight (lbs) _____

Net Weight (lbs) _____

Total Volume (gallons) _____

Weight or volume is required. Attach scale tickets.

I certify that a trailer calibration chart was used to determine the volume of the load, and that I personally witnessed the intake and outage measurement for the volume listed above. I certify that the non-hazardous organic waste in this load was generated by the listed facility, that the waste does not contain pollutants of regulatory concern in excess of 35 IL Admin Code § 830 Table A., and the waste is consistent with Green Era's feedstock acceptance criteria. I further certify that the load has been under my custody from the point of pickup at the generator to delivery to this facility.

Plant Operator

Signature _____

Print _____

Driver

Signature _____

Print _____

Green Era Rules:

1. Only waste products that have been pre-approved from known generators are accepted at this facility.
2. Inflow materials must be non-hazardous and below ceiling limits for As, Cd, Cr, Cu, Pb, Hg, Ni, Se, and Zn in 35 IL Admin Code § 830 Table A.
3. For acceptance, loads must comply with document SOP-21-006, Feedstock Acceptance Guidelines. See posted notice or request an electronic copy from the plant operator.
4. Site hours are 6 AM to 4 PM, Monday through Saturday. Loads may be accepted outside of these hours by appointment only.

Green Era	**Waste Generator Survey** (waste characterization)	FORM-21-007 Revision: 0 Effective: 10/02/21 Reviewed: 10/02/21

Provide this form to waste generators to determine suitability of a waste stream for digestion and to ensure that the waste is acceptable at this facility per the operating permits.

Green Era Waste Generator Survey

Date _____ **Contact Name** _____

Company Name _____ **Job title** _____

Street Address _____ **Email** _____

City / Zip _____ **Phone** _____

Waste Name _____ **Type** _____

How is this waste identified on a manifest

Pumpable sludge, wash water, cake sludge, stackable solids, vegetable pieces

Major Ingredients _____

List any component products in the waste stream. (i.e. water, chicken fat, chicken skin, bone pieces, meat scraps)

Detergents /Sanitizers / coagulants _____

List any potential CIP chemicals or other cleaning products that may be combined with the waste stream. List any waste water treatment chemicals that are used to recover the waste. If none, write N/A.

Describe the process that produces the waste. _____

Example: Wash water is collected in open gutters throughout the facility and piped to a pretreatment plant. Coarse solids are screened and mechanically removed. Dissolved air flotation is used to separate oils and grease from the wash water prior to further water treatment. The skimmed sludge from the DAF is removed and pumped to a holding tank prior to loading onto tankers for disposal.

How is the waste transported and avg. load size. _____

6,000 gallon closed tanker truck, 5,000 gal vac truck, 25 ton tarped dump trailer, 40-CY roll-off box, 13 CY front loading packer, etc…

How is the waste currently treated? _____

Digester, landfill, direct land application

Non-organic contamination _____

List any sources of non-organic contamination such as plastic film, rigid plastic packaging, rags, gloves, cans, cardboard, rocks, etc…

Sanitary Waste _____

Confirm that at no point this waste stream is comingled with any classified human sanitary waste (restrooms, septage, biosolids, etc)

Odor _____

Describe the odor of the waste product.

Tons or gallons per week _____

Min/max _____

Loads per day _____
On days that you produce waste, how many loads per day would be sent to Green Era?

Storage Age _____
Is the waste stored onsite or loaded into tanks and held for some period before transporting?

Largest Solids _____
Largest expected spherical solid.

Describe any seasonality to waste volume. _____

Days when loads would be delivered? _____
List preferred delivery days. Do you need to haul on Saturday and Sunday?

Temperature when loading _____
Do the loads have the potential to freeze during winter conditions? Are the loads hot?

Slump test / stackability _____
For pumpable wastes, is the waste viscous? If 1 gallon is dumped on the floor does it spread out and flow or remain in a pile like wet concrete? For non-pumpable wastes, does the waste stack in the trailer or does it self-level?

Total Solids _____ **Volatile Solids** _____

pH _____ **COD/BOD** _____

Attach any available representative lab reports with nutrient (NPK) and metals analysis.

Attach photos of the waste.

	Completed By	**Reviewed By (Green Era)**
Signature	_____	_____
Print	_____	_____

Green Era Rules:

1. Only waste products that have been pre-approved from known generators are accepted at this facility.
2. Inflow materials must be non-hazardous and below ceiling limits for As, Cd, Cr, Cu, Pb, Hg, Ni, Se, and Zn in 35 IL Admin Code § 830 Table A.
3. For acceptance, loads must comply with document SOP-21-006, Feedstock Acceptance Guidelines. See posted notice or request an electronic copy from the plant operator.
4. Site hours are 6 AM to 4 PM, Monday through Saturday. Loads may be accepted outside of these hours by appointment only.

WASTE CONTROL PLAN (MP-10) APPENDIX C
LOGS

Green Era

Unauthorized Waste Log

Doc. No. LOG-21-006

Incoming Manifest No.	Date Received	Date detected	Date Removed for Disposal	Days stored onsite	Generator/Source	Hauler/Trucking	Waste Description	Waste Type/Classification	Mass (lbs)	Volume (note units)	Disposal company	Outbound Waste Manifest	Receiving Facility	Notes

ATTACHMENT 17
ODOR CONTROL & MONITORING PLAN

ODOR CONTROL & MONITORING PLAN

Doc. No. MP-08 & MP-09

Green Era Renewable Energy & Urban Farming Campus

650 W. 83rd Street

Cook County, Chicago, Illinois 60620

Prepared By

Green Arrow Engineering

2759 Long Road

Wooster, OH 44691

ODOR CONTROL PLAN

Doc. No. MP-08

Green Era

Organics Recycling Facility

REVISION LEVEL	DESCRIPTION	ISSUE DATE
R0	INITIAL RELEASE	10/2/21
R1	ADDED CODE REFERENCES TO INTRODUCTION. ADDED REFERENCES TO APPENDICES	10/20/21
R2	UPDATED TABLE OF CONTENTS AND SECTION REFERENCES. INCLUDED ADDITIONAL CODE REF. TO 35 IAC Part 245.121. ADDED REFERENCE TO TRAINING LOG, LOG-21-0001	10/24/21

Contents

1 Introduction 2
1.1 Regulatory Mandate 2
2 Odor Control Plan 3
2.1 Ionization System for Primary Odor Control in Operations Building 3
2.1.1 Considered Odor Control Technologies 5
2.2 Reference facilities 6
2.2.1 References 7
2.3 Odorous Air Treatment for Green Era 7
2.3.1 Food Waste Odor Sources 10
2.3.2 Digestate Odor Sources 10
2.3.3 Quantitative Odor Generation Potential 11
2.3.4 Ionizer units for In-situ treatment 11
2.3.5 Activated Carbon Filter 12
2.4 Best Management Practices 13
2.4.1 Inventory Management 13
2.4.2 Housekeeping 13
2.5 Odor Monitoring 14
3 Training 16
4 Recordkeeping 16
5 References 17

Attachment

Attachment to Odor Control Plan: Odor Monitoring Plan (MP-09)

Appendices

Appendix A: Equipment Specifications

Appendix B: Activated Carbon Guard Bed Sizing Calculations

Appendix C: Reference Drawings

Appendix D: Forms

Appendix E: Logs

1 Introduction

Green Era Educational NFP has developed a formerly vacant property addressed as 650 West 83rd Street in Chicago, Illinois into a food waste (solid and liquid) recycling (composting) facility to be operated by Green Era 83rd Street, LLC. The facility, referred to as the Green Era Renewable Energy and Urban Farming Campus (Green Era), will recycle food waste via conventional wet anaerobic digestion. In addition to anaerobic digestion (primary facility activities), the property will also be used for urban farming operations and as a community garden center.

1.1 Regulatory Mandate

Section 9(a) of the Illinois Environmental Protection Act (the Act) states that "No person shall cause or threaten or allow the discharge or emission of any contaminant into the environment…so as to cause or tend to cause air pollution…" Section 8 of the Act defines air pollution as "a menace to public health and welfare," as well as an emission that "creates public nuisances." Simply put, odors that the public find offensive are a form of air pollution that must be controlled.

Additionally, 35 IAC Part 245.121 states that an "objectional odor nuisance" exists:

> a) On or adjacent to residential, recreational, institutional, retail sales, hotel or educational premises when odor is detectable in the ambient air after it is diluted with eight volumes of odor-free air as measured by the Scentometer;
>
> b) On or adjacent to industrial premises when odor is detectable in the ambient air after it is diluted with twenty-four volumes of odor-free air as measured by the Scentometer;
>
> c) On or adjacent to premises other than those above when odor is detectable in the ambient air after it is diluted with sixteen volumes of odor-free air as measured by the Scentometer;
>
> d) When concurrent determinations made by three trained inspectors as outlined above in any given one hour period and at intervals of not less than fifteen minutes result in two positive determinations in each series of three determinations; and
>
> e) Provided that any quantitative odor level measurements taken to arrive at a determination that an objectionable odor nuisance exists shall be at or beyond the property line or at or near places where people live or work.

Section 2.5 of this Odor Control Plan discusses the proposed use of the Nasal Ranger® field olfactometer to monitor for odors, which provides the same functionality as the Scentometer that is referenced in 35 IAC Part 245.121.

The City of Chicago also requires descriptions of odor control per Municipal Code Section 11-4-1520(A)(26).

Although the Green Era composting facility is not a landscape waste composting facility, compliance with odor control requirements of 35 IAC 830.206(g) may be viewed as best management practices. This Odor Control Plan has been developed to demonstrate methodology and procedures that the facility will follow to ensure compliance with all applicable regulations.

Additionally, because the chemical compounds in the air space of the processing building associated with odors are expected to include hydrogen sulfide and VOCs (both of which are "specified air contaminants" under IEPA regulations), the air permit application for the facility identifies the processing building as an emission source and the ionizers and activated carbon guard bed as air pollution control equipment. Requirements to obtain Construction and Operating Permits for new sources of emissions are contained in 35 IAC 201.142 and 201.143.

A "Specified Air Contaminant" is defined under 35 IAC 201 as: *any air contaminant as to which this Subtitle contains emission standards or other specific limitations and any contaminant regulated in Illinois pursuant to Section 9.1 of the Act.*

2 Odor Control Plan

Green Era recognizes that when handling and processing food waste, odors must be actively monitored, managed, and controlled. Every effort is made to reduce the occurrence of odor on the site.

- Trucks delivering food waste to the facility will be covered. Liquid tankers will be sealed.
- All waste receiving and processing will occur within the Operations Building (B-100).
- The processing building doors will only be opened when vehicles are entering or exiting.
- Waste will be tipped directly to live bottom hoppers to minimize open handling.
- Putrescible waste will be processed the same day as it is received.
- Receiving tanks and process equipment in the Operations Building will be directly vented to the odor control equipment.
- Separated packaging from the food waste will be loaded into enclosed compactors.
- Digestate solids separation (dewatering) and cake solids loading will be performed in the Operations Building.
- Trucks hauling digested solids (cake) from the facility to Urban Growers Collective will be tarped.
- Trucks tipping waste will drive on a clean concrete floor and tip into a bin on a lower level. Rinse water will be provided in the building if they need to clean their tailgate prior to exiting.
- Daily housekeeping will be performed to rinse organics from processing equipment.
- The process ventilation system will keep the Operations Building under slight negative air pressure (-0.08 to -0.1 inWC) to minimize any fugitive emissions when doors are opened for entry or exit.
- Three stages of odorous air treatment will be installed. Ionizers within the process building will reduce primary odorant concentration levels in the building to significantly improve the working environment for the employees. The ducted building exhaust air will be further treated by a high-output ionization reactor to oxidize remaining odorants from the building air and process equipment vents. The treated air will then be drawn through an activated carbon guard bed as a final step to ensure that no odors will be detectable in the ventilation air from the exhaust stack.

Odor source prevention and control measures such as minimizing feedstock handling, inventory control, and general housekeeping are just as important as odor abatement methods. Green Era will evaluate each process and standard operating procedure for its impact as an odor source continually improve odor source prevention strategies.

Employee awareness and sensitivity to the community will be promoted by regular and standardized olfactory monitoring (sniff tests), emission sampling, and building air quality monitoring and recordkeeping. The facility will also provide contact information by email and phone on the website for reporting odors in the neighborhood that are suspected to originate from the facility. An employee of Green Era will follow-up on each complaint and complete a standardized form to record the incident. Green Era's goal is zero complaints.

2.1 Ionization System for Primary Odor Control in Operations Building

Since all waste handling and processing is carried out in the Operations Building, odors generated from the waste handling will be contained by the building. The indoor air quality will be maintained by managing air flow rates through the building and with odor neutralization in the building through the use of ionized air.

Ionization of air principally creates positive and negative charged oxygen molecules. Any molecule with a positive or negative charge is called an ion. Oxygen ions can react with VOCs to form different more stable compounds such as carbon dioxide and water vapor. This process is effective at removing odorous compounds from the air. Ionization does not mask odors. Concentrations of odorous compounds such as hydrogen sulfide and ammonia will be directly reduced by ionization.

Ionization was selected for the primary active odor control equipment because this technology treats the building air in-situ and will improve the indoor air quality for Green Era's employees, truck drivers delivering waste to the facility, and for visitors.

Bi-polar ionization tubes look similar to a fluorescent light bulb in terms of construction. The end of the bulb has an electrical contact that fits into a bulb socket on the power source. An electrode inside the tube is energized by the power source. The glass tube serves as a dielectric insulator to keep the electrode separate from a metal mesh sleeve that slips over the bulb. An electrostatic discharge is produced when power is applied to the bulb. A neutral oxygen (O_2) molecule will lose an electron as it travels past the bulb. The loss of the electron will give that O_2 molecule a positive charge. The free electron will bind with another O_2 molecule and form a negatively charged ion. The ionized molecules are unstable and will only carry a charge for about 2 minutes. Due to the electrostatic force they will be drawn to neutralizing molecules or surfaces. The O_2 ions will react with VOCs to form benign compounds - for VOCs principally CO_2 and H_20. Other odorous compounds can also be oxidized. In the case of the hydrogen sulfide molecule, H_2S, the hydrogen will split from the sulfur to form water vapor and the sulfur will bind with 4 oxygen atoms to form SO_4 sulfate, which will precipitate as a solid. Nitrogen separated from hydrogen in the ammonia (NH_3) molecule will bind with other nitrogen atoms to form N_2 molecules. Free hydrogen will bind with oxygen to form water vapor.

Ozone (O_3) also has the potential to be created during ion formation. Since ozone is recognized as an air pollutant and is harmful to breathe above 0.1 PPM, the bulbs and controller are designed to limit production of ozone to less than <0.05 PPM.

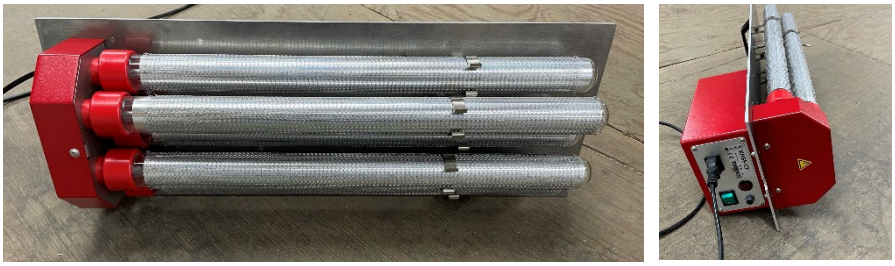

FIGURE 2-1: PHOTO OF 5-BULB UNIT WITH POWER SUPPLY.

In a common configuration, sets of five bulbs are packaged with a small transformer that can be inserted into standard air handlers or metal duct. The bulbs are available in different lengths up to 20 inches (0.5 meter). These 5-bulb sets are banked together in groups to treat larger ducts. Some manufacturers also offer transformers for up to 24 bulbs. A bank of 24 bulbs draws less than 500 watts of power. The 24-bulb sets can also be banked together in large air handlers to provide the required capacity.

For Green Era, four separate air handlers in the building will circulate and ionize air in the feedstock receiving area near the reception bin and in the dewatering area, where most of the odor will be generated. Two air handlers in

FIGURE 2-2: 24 IONIZER TUBE BUNDLE WITH POWER SUPPLY SHOWN MOUNTED IN A DUCT SECTION FOR ILLUSTRATION.

dewatering area (W-032A, W-032B) will have flow rates of 4,000 SCFM and have two 5-bulb units with 10 bulbs per air handler. The two air handlers in the feedstock processing and receiving area will each have flow rates of 8,000 SCFM using two 4,000 SCFM fans and four 5-bulb units for a total of 20 bulbs (W-032C/D, W-032E/F).

A separate air handler outside the building (W-036) will have four 24-bulb units installed and will intensively ionize 4,120 SCFM of fresh outdoor air to mix with the 38,000 SCFM of building exhaust air to provide secondary treatment of the full exhaust stream. Some of the process equipment and all below slab liquid tanks are directly vented to the building exhaust blowers. The air in the process equipment cabinets and tank headspace will have minimal contact with ionized air. This secondary end-of-pipe treatment will primarily serve to reduce odorants introduced from that equipment and tanks. Since the two air streams are mixed in a duct, the contact between the ionized air and the odorant molecules will be guaranteed. A further 75% reduction in odorant concentration is expected from this treatment step. A subsequent carbon guard bed will receive the full air flow of 42,120 SCFM to ensure full treatment prior to exhaust independent of the ionizer performance.

Equipment specification sheets for the ionization equipment along with the other odor control equipment is provided in Appendix A of this Odor Control Plan.

2.1.1 Considered Odor Control Technologies

Three (3) different odor control technologies were evaluated, as discussed below.

2.1.1.1 Wet Scrubbers

A dual-stage wet scrubber was considered for this project. Wet scrubbers have been proven over years and thousands of installations to be extremely effective at treating H2S and ammonia gases, and would capture between 40 and 50% of VOCs. However, these systems require relatively high operational management and employee training. A wet scrubber also uses caustic and acid chemicals that aren't required for any other processes or operations at the facility. Pumps are needed to constantly circulate scrubber fluid through the packed bed to cross-flow with the air. For this site, insulation, heat tracing, and sump heaters would also be needed to prevent icing during winter operation. Chemical dosing pumps would automatically inject caustic or acid based on the fluid pH, but these systems need to be carefully monitored. From an operational cost and health/safety perspective, ionization was preferrable since it can be operated with minimal monitoring and maintenance and the process doesn't use any chemicals. Ionization is also more effective in treating odorous VOCs associated with food waste handling.

2.1.1.2 Bio-Filters

Biological systems are also commonly used for digester odor control. Natural or synthetic media biofilters provide surface area for odorant consuming bacterial populations to colonize. Contact times need to be relatively long compared to chemical treatment to allow the odorous air sufficient time to interact with the bacteria. Synthetic media requires nutrient and mineral solution to promote growth. Fixed film tricking filters are also sometimes used, especially when hydrogen sulfide control is the primary objective. But traditional biofilters are biological systems that are sensitive to variations in odorant loading. The bacteria in a biofilter perform best if they have a constant food source, are held at steady temperatures, and are not allowed to dry out. With shift operations at Green Era the plant will have long periods with almost no odorant load when the plant is not receiving or processing waste. A three-day weekend with relatively low odorant load could make it difficult to maintain a healthy biological system. A biofilter also has to adapt and adjust to changing odorant composition. For a merchant facility like Green Era, this could be problematic as different feedstocks can have different VOC and odorant profiles - spoiled produce smells very different from spoiled milk. Biological systems take time to shift bacterial population to consume new VOCs and to adjust to large swings in concentration of the VOCs. Chemical scrubbers are relatively insensitive to changes in inlet concentration as the reaction is only driven by the presence of the chemical and contact with the odorant. Likewise, ions will oxidize odorants on contact and are only

sensitive to overloading if insufficient ions are being produced relative to the odorant concentration. Biofilters also require close monitoring and control in comparison to an ionizer. Also with the air flow requirement through the facility, a biofilter would require a much larger footprint than a packed tower scrubber or ionizers.

2.1.1.3 Activated Carbon

Activated carbon is often used for wastewater treatment plants to control odors especially for point sources from small buildings or process tankage and equipment. Activated carbon is a mature technology with thousands of installations for odor control and multiple companies that supply different carbons for specific applications. Virgin activated carbon will react with VOCs and bind them to the carbon. Activated carbon can also be impregnated with other chemicals to target specific odorants. Many manufacturers produce impregnated activated carbon to capture hydrogen sulfide that can hold 20 pounds or more of hydrogen sulfide per pound of carbon until it is saturated. Other engineered activated carbon products target ammonia. Activated carbon works as a fixed media filter and can be housed in relatively inexpensive tanks or vessels to contact with process air. Like wet scrubbers and the biofiltration, activated carbon is an end-of-pipe solution meaning the air needs to be captured and blown through the media to create the contact to enable the reaction. A disadvantage of activated carbon for air scrubbing applications is that it needs to be replaced as it saturates with odorant. This is an ongoing operational cost and the removed carbon generally needs to be landfilled. When used for primary odor control, the 30-year lifetime operating cost often is higher than for wet scrubbers or biofilters, especially for high odorant concentrations. An advantage though is that even with relatively short contact times of air to the media of around 1 second, activated carbon can completely remove targeted odorants to below olfactory detection limits. Like the biofilter and packed tower, air moving through the filter bed will have a significant pressure drop and requires electrical energy for a blower to overcome this loss. But other than the blower, an activated carbon filter does not require other mechanical equipment to operate and only requires minimal monitoring of the inlet and outlet pressures as well as removal efficiency to predict when a media change is needed.

While ionizers have the capability to fully treat odorous air from this type of facility, we recognize that this is an emerging technology with a relatively short performance history in comparison with the other solutions. Since this facility is sited in a location with close neighbors, we have chosen to pair the ionizers with an activated carbon guard bed to ensure full treatment. Doing so will provide a proven Best-Available-Technology solution in the activated carbon bed while also allowing the plant to benefit from the newer ionization technology by removing almost all of the odorant before it reaches the carbon bed. During periods of low inlet odorant concentrations, the ionized air will also regenerate the virgin carbon by reacting directly with the VOCs it has captured in its matrix. The ionized air is not able to regenerate impregnated carbon for hydrogen sulfide removal because the hydrogen sulfide will be chemically bonded with the reagent. But by minimizing the odorant inlet concentration to the guard bed and by regeneration of the virgin carbon, the bed life will be significantly extended.

The design specifications of the carbon guard bed are provided in Appendix A of this Odor Control Plan. The sizing calculations for the carbon guard bed are provided in Appendix B.

2.2 Reference facilities

Ionization technology has proven to be effective at controlling odors at food waste digesters in the UK that are similar in size to Green Era. A plant that was commissioned in 2020 in Aberdeen Scotland gained approval from the Scottish Environmental Agency to use ionizers as the primary odor control, also with an activated carbon guard bed (Scottish Environment Protection Agency, 2020). This facility is sized to receive and process 81,000 mTons per year of organics including pumpable and non-pumpable food waste, is located in a dense urban area, and was developed by the City of Aberdeen as a public project. It was noted as a factor in the permit decision that an ionization system was previously permitted by the UK Environment Agency for a 160,000 mTon/y food waste digester in Dagenham, East London in 2017 that is operating without odor concerns. The London facility was also granted approval based on the successful use of ionizers for odor control at another food waste plant at Widnes, England that was permitted in 2014. The Environment Agency noted in their decision that since implementation

at the Widnes site, there have been no odor complaints or concerns (UK Environment Agency, 2017). The Widnes Plant and the Dagenham facility are both operated by ReFood (https://refood.co.uk/about-refood/our-facilities/). Neither of these facilities have a secondary activated carbon bed and are only using ionization to control odors in their receiving and processing buildings. The ionization system was provided by CSO Teknik for these plants. Based on their experience with similar facilities, they state an effectiveness of 80% odor reduction within 1.5 meters of an odor source and 90% odor reduction within 3 meters of the odor sources. CSO Teknik markets their system in North America through Kusters Water and primarily have targeted waste water treatment facilities. The trademark name for the CSO Teknik's ionizer system is Terminodour.

Aerisa, a New York company, also provides ionizers systems for odor control. They have several installations in wastewater facilities for headworks and dewatering. Green Arrow engineers have visited two of these facilities. The Palm Valley 4 MGD plant in Goodyear, Arizona services an urban area near Phoenix and is directly adjacent to a major road, golf course, and subdivision. They implemented ionizers in their headworks building and dewatering building in 2007. This facility uses ionized air in the buildings for primary treatment along with a high-capacity ionization reactor on the ducted exhaust air to ensure full treatment. The building exhaust discharged at ground elevation from an air handler (Dodds & McBride, 2008). The plant operators reported that they have been complaint free when Green Arrow visited in 2016.

Varionix of Switzerland is another major supplier of ionizer systems for odor abatement and control. The trademark name for Varionix's ionizer system is Bentax. Green Arrow is working with a distributor based in Germany for these systems whom has application experience in sizing and layout for various applications including food and food waste processing and wastewater.

2.2.1 References

Dodds, B., & McBride, B. (2008). Odor Abatement and Cold Plasma Technology. *WEFTEC Conference Paper*, (pp. 1-12). Chicago. Retrieved Aug. 2021, from https://www.aerisa.com/library/

Scottish Environment Protection Agency. (2020, November 13). *PTO Aberdeen Digester Permit No. PPC/A/1188451.* Retrieved from Scottish Environment Protection Agency: https://www.sepa.org.uk/media/534392/1188451_permit.pdf

UK Environment Agency. (2017, February 6). *Permit Decision Report for permit number EPR/QP3735DL/A001, Dagenham AD Plant.* Retrieved from UK Environment Agency: https://assets.publishing.service.gov.uk/government/uploads/system/uploads/attachment_data/file/617612/Decision_document_.pdf

2.3 Odorous Air Treatment for Green Era

The odor control system will be installed to treat the building air from two major sources - raw organic food waste and digester effluent. The scrubber system is sized to treat 38,000 SCFM of odorous air. Make-up air will enter the building along the east wall. The fresh outdoor air is either blown into the building from the make-up air units or drawn in through the overhead doors when they are opened for entry or exit from the building. The primary make-up air handlers (*MAU-950 and MAU-951*) will each have 2.2 MMBTU/h output (2.4 MMBTU/h input) direct fired natural gas heaters to preheat the air during winter operation (Figure 2-3). All fans and blowers are powered by Variable Frequency Drives (VFDs) that will allow the fan speeds and airflow rates to be modulated by the control system. The primary make-up air units and the two primary building exhaust fans will be operated below

their nameplate capacities. This will provide both system resilience and flexibility in balancing the system after the start of operation to meet changing process requirements.

To promote air circulation in the building envelope, three ceiling hung 4,000 CFM air handlers (AH-954A-C) will draw air from near the ceiling, heat the air when needed, and discharge from registers at 8-feet above the floor (see M-813). Each air handler will be equipped with a 250,000 BTU/h direct fired natural gas burner (see M-710).

Feedstock processing and dewatering activities are centrally located in the building. Fresh makeup-air introduced along the east wall will be pulled toward the west wall by two scrubber fans via ducted inlet headers, each with roughly 30,000 CFM of capacity. This air flow will keep odorant concentrations to a minimum in the east half the building where trucks are delivering feedstocks by keeping the air moving from areas with low odor potential to areas with higher odor potential (*Figure 2-3*). The plant operator may choose to operate both of these units at reduced flow rates of at or below 19,000 CFM by slowing the fan speeds to maintain a negative building pressure. Or each unit can be operated independently at full capacity. Since the facility will not be processing waste 24/7, the blower flow rates may also be reduced during off-shift periods. This will be managed by the plant operators through the computerized control system and provides flexibility to adapt to changes in the plant operation.

The centrally located finished spaces in the building including the control room/office 113, electrical room 112, maintenance/shop room 115, and restrooms will have a dedicated HVAC system to supply fresh air from the outside. The rooms will be maintained under slight positive pressure (see drawing M-720). The boiler room/mechanical room 123 will have a separate ventilation fan to draw up to 22,000 CFM through the room to maintain 10 degrees above ambient during the summer (see drawings M-720, M-812).

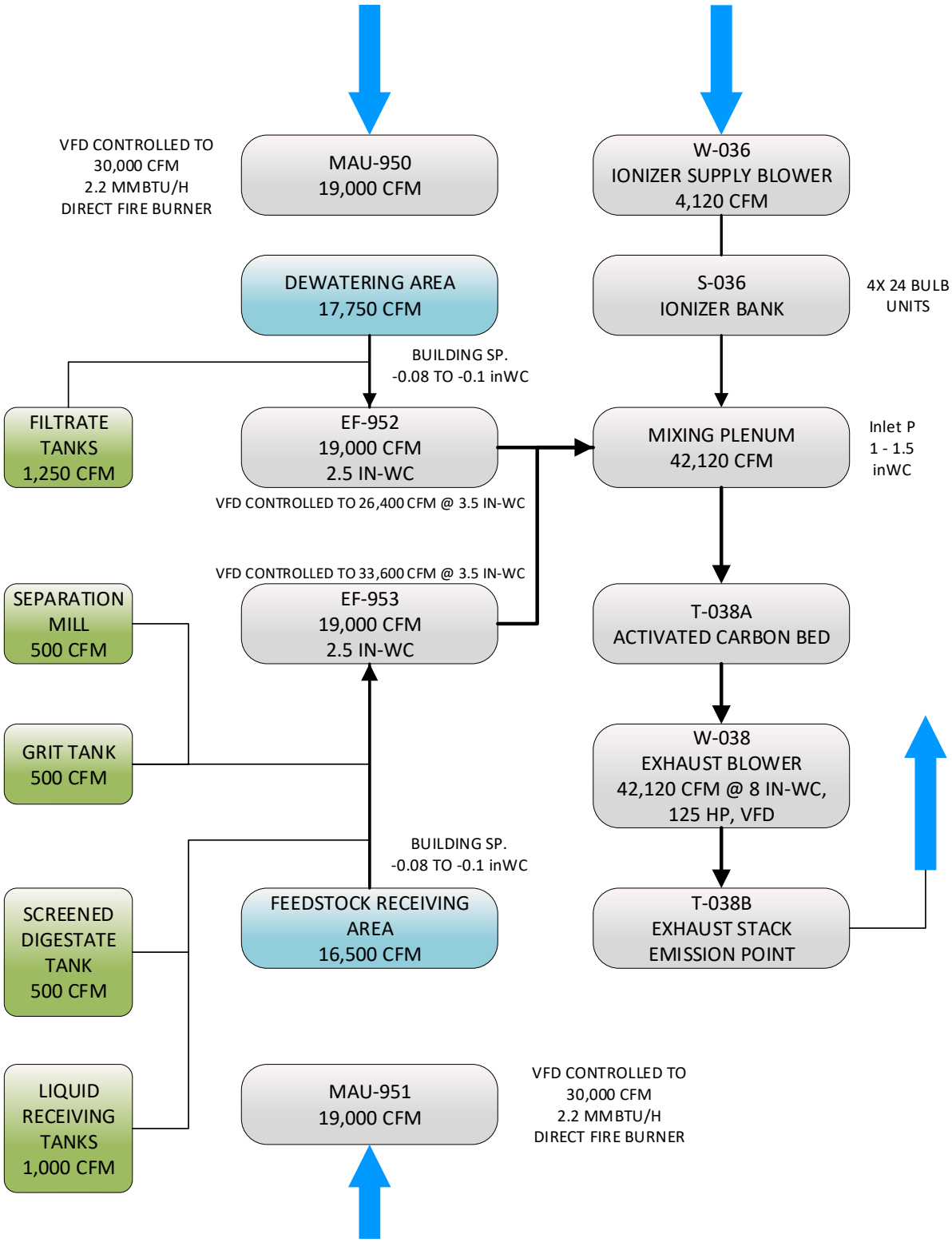

FIGURE 2-3: VOLUMETRIC AIR FLOWRATES IN OPERATIONS BUILDING

2.3.1 Food Waste Odor Sources

Untreated food waste will have a different odor profile than the digestate. Feedstock entering the facility may have already started to decompose prior to collection. Rotting food waste has the potential to produce odorants including sulfides, amines, and volatile fatty acids (VFA). Since material will be collected and transported to the facility in closed or covered trucks, odor from the material should not create a nuisance outside of the Operations Building. Trucks will enter the building through an overhead door and will back-up to the tipping wall. The material will be dumped from the truck directly into a live-bottom reception bin that is about 10 feet lower than the truck. The truck will be able to fully empty the load as the bed is raised. After tipping, the truck may pull forward and rinse off the tailgate with a garden hose prior to exiting the building. Negative pressure will be maintained within the building envelope and the receiving area.

Whenever the food waste is handled in the building it has the potential to produce unpleasant odors. Food waste odors will be most noticeable in the area around the solid food waste receiving bin. Odor will be strongest here when waste is tipped from a truck into the bin. The separation mill also has the potential to release odors as the wastes are pulped. An odorous air vent will be installed on the machine cabinet to actively remove any aerosol and can draw up to 250 CFM per machine (*Figure 2-3).* Circulating air handlers with ionizer bulbs will also be installed in this area to treat odors from the receiving bin and food waste processing.

Liquid food waste will be gravity discharged from tanker trucks to below-slab tanks through 4-inch or 6-inch hoses. All the below grade tanks will be directly vented to the odor scrubber supply header. Exhaust fan EF-953 will drawn building air through the tank headspace. The return ducts will be balanced so that the draw through each tank is about 500 CFM (*Figure 2-3*). The negative pressure in the tanks relative to the building envelope will prevent odorous air from being released into the building when trucks are discharging to the tanks. The below-slab process tanks each have about 34,000 gallons of empty volume. 500 CFM flow rate per tank will provide more than 6 ACH when the tanks are empty.

2.3.2 Digestate Odor Sources

After pulping and digestion, most of the organic will have been removed from the waste and the remaining effluent will be considered ‘stabilized’. Stabilized digestate will also be odorous, but will have a different odor profile from the raw waste. Since it is stabilized, the odors will be much more uniform and shorter lived than from rotting food waste. Hydrogen sulfide and ammonia are the predominate odorants expected from the digestate handling. Most of the odorant will be released into the building as the sludge is distributed onto the dewatering belt. Ventilation returns are located directly over the belt press positions. This same process is used by municipal treatment plants to dewater digested biosolids.

The dewatering belt press is located on the main floor adjacent to the south end of the lower level, between building column lines 2 and 3. Separated filtrate will gravity drain into two concrete filtrate tanks below the press area. The tanks bulkhead to the lower level. Cake solids are conveyed from the press and loaded onto a truck dump trailer or a roll-off box. The truck will be parked under a distribution conveyor in the bay adjacent to the press. Four ducted exhaust vents are located in this area each with 4,400 CFM nominal capacity and are the only suction inlets for exhaust fan EF-952 (see M-813). The fan speed of EF-952 can be varied and can be increased up to 22,400 CFM when feedstock processing isn’t operating. The building envelope with have a gross air change rate of 1.7 ACH when at 38,000 CFM.

In-ground tanks and enclosed equipment will have dedicated ventilation ducts with control dampers to maintain negative pressure within their respective volumes. The process equipment ducts will connect to the exhaust fan ducts inside the building. The exhaust fans will draw air from the equipment and the system will be manually balanced.

2.3.3 Quantitative Odor Generation Potential

Table 2-1 lists the expected maximum concentrations of the odorants ammonia and hydrogen sulfide in each area with no reduction taken for the supplied ionizers shown in for the "untreated" totals. This model predicts a loading rate of 1.38 lbs/h of ammonia and 1.41 lbs/h of hydrogen sulfide. While other odorants will be present in the air, ammonia and hydrogen sulfide are easy for most people to identify by smell and the concentrations of these gases can be accurately measured with field instruments. The relative concentrations of these gases can be tracked over time allowing plant operators to measure and understand the impact of operational changes with respect to air quality.

2.3.4 Ionizer units for In-situ treatment

As introduced in Section 2.1, additional circulating air handlers will be positioned to deliver ionized air over the dewatering area and the feedstock receiving area. For this phase of construction, two air handlers in the dewatering area will provide 4,000 CFM each of ionized air (W-032A, W-032B). The registers will be adjusted to distribute over the press equipment and the cake handling conveyors. Two additional circulating air handlers, each with 8,000 CFM capacity, will be positioned over the solids receiving equipment to deliver ionized air over the reception bin, grit tank, and truck tipping area. Each of these air handlers will use twin 4,000 CFM fans to make 8,000 CFM of flow (W-032CD, W-032EF). The effectiveness of the ionized air handlers will be dependent on positioning to maximize contact potential between the odorous air and the ionized air. The supply registers can be adjusted after installation to change the airflow direction. Based on the published performance at other facilities, the ionizers are expected to achieve a minimum concentration reduction of 80% compared with the control condition without the ionizers operating. In *Table 2-1*, a 75% reduction was conservatively assumed for the process building sources treated by the circulating air handlers. Since the ionized air is not long-lived, it was assumed that the odorants from the process equipment and tanks would not be reduced in the process building. The full concentration would be extracted by the scrubber fans and would be reduced in the duct by the secondary ionizer bank that is injecting around 4,000 SCFM of ionized air and blending with the odorous exhaust air ahead of the carbon bed. A further 75% reduction is conservatively assumed in this stage. The remaining concentrations entering the carbon bed are expected to be 1.1 ppm of NH3 and 0.6 ppm of H2S when the ionizers are operating at a mass loading rate of 0.13 lbs/h for NH3 and 0.15 lbs/h for H2S.

VENTILATED AREA	Air pretreated with ionizers	FLOW RATE	NH3			H2S		
		SCFM	*PPMV*	*mg/m3*	*LBS/HR*	*PPMV*	*mg/m3*	*LBS/HR*
FEEDSTOCK RECEIVING AREA	Yes	16,500	9	6.4	0.396	4	5.7	0.352
SEPARATION MILL & GRIT TANK	No	1,000	10	7.1	0.027	10	14.2	0.053
LIQUID RECEIVING TANKS	No	1,000	10	7.1	0.027	20	28.5	0.107
SCREENED DIGESTATE TANKS	No	500	100	71.3	0.134	30	42.7	0.080
DEWATERING AREA	Yes	17,750	16	11.4	0.758	8	11.4	0.757
FILTRATE TANKS	No	1,250	10	7.1	0.033	10	14.2	0.067
SCRUBBER TOTAL INLET	**untreated**	38,000	13.6	9.7	1.38	6.987	9.9	1.41
CARBON BED INLET W/DIULTION		42,120	12.2	8.7	1.38	6.303	9.0	1.41

			PPMV	*mg/m3*	*LBS/HR*	*PPMV*	*mg/m3*	*LBS/HR*
PRETREATED lbs/h					1.15			1.11
UNTREATED lbs/h					0.220			0.306

AFTER 75% REDUCTION	75%				0.29			0.28
TOTAL TO IONIZER CANON		42,120	4.5	3.2	0.51	2.6	3.7	0.58
CARBON BED INLET		42,120	1.1	0.8	0.13	0.6	0.9	0.15
CARBON BED OUTLET	99.0%	42,120	0.011	0.01	0.0013	0.006	0.01	0.0015

TABLE 2-1: EXPECTED ODORANT CONCENTRATION BY SOURCE/AREA (APPENDIX C: DRAWING 1512-500-01)

2.3.5 Activated Carbon Filter

This facility will use a vertical deep bed carbon filter (T-038) with 32 cubic yards of media capacity, a 20-inch bed depth, and a contact time of 1.25 seconds. The filter will be built into a 40-foot long standard shipping container and the filter bed will be subdivided into 16 cells, each with 2 cubic yards of media. The media can be loaded from the top of the container into each cell. A 4-mm pelletized carbon will be used instead of granular carbon. Pelletized carbons have lower pressure drops across the bed and will result in energy savings. The side walls of the bed will be made of 304 perforated stainless sheet with 1/8-inch holes on 3/16-inch centers and 40% open area. This unit will be located on the west side of the building adjacent to the two process area exhaust fans (*Figure 2-4*).

2.3.5.1 Breakthrough calculation

Sizing calculations for the carbon guard bed are detailed in Appendix B. Activated carbon is effective at trapping odorous molecules, but the media does have a finite capacity. After the media becomes saturated it can no longer capture additional odorants. Breakthrough of the carbon bed occurs when some of the odorant slips through the bed without being captured by the carbon. Breakthrough quantitatively occurs when the odorant concentration in the exhaust stack exceeds detection thresholds. Green Era will measure and track the H2S concentration level in the exhaust gas stream and use this data to monitor bed life and system performance in addition to daily site odor observation. Green Era's goal is to have no offsite odors and to have no odor complaints.

The predicted maximum hydrogen sulfide loading rate to the carbon bed is calculated at 1.41 lbs/h. This assumes that the ionizers do not perform and will not provide any reduction of hydrogen sulfide. The carbon holding capacity is rated at a minimum of 0.3 g/cc of carbon per ASTM test method D-6646. For estimating the breakthrough time on the planned carbon bed, 50% saturation capacity of hydrogen sulfide is assumed or 0.15 g/cc. With the 32 cubic yards of carbon, more than 8,000 pounds of hydrogen sulfide could be captured (Appendix B, eq. 11).

The minimum time for breakthrough of the carbon bed is calculated to be in excess of 5,000 hours (Appendix B, eq. 12). The expected odorant loading rate to the carbon bed is much lower. Assuming that the ionizers reduce the odorant levels by 75%, 0.15 lbs H2S/h will need to be scavenged by the activated carbon. The breakthrough time at this loading rate is calculated as more than 54,000 hours or 6 years (Appendix B, eq. 13).

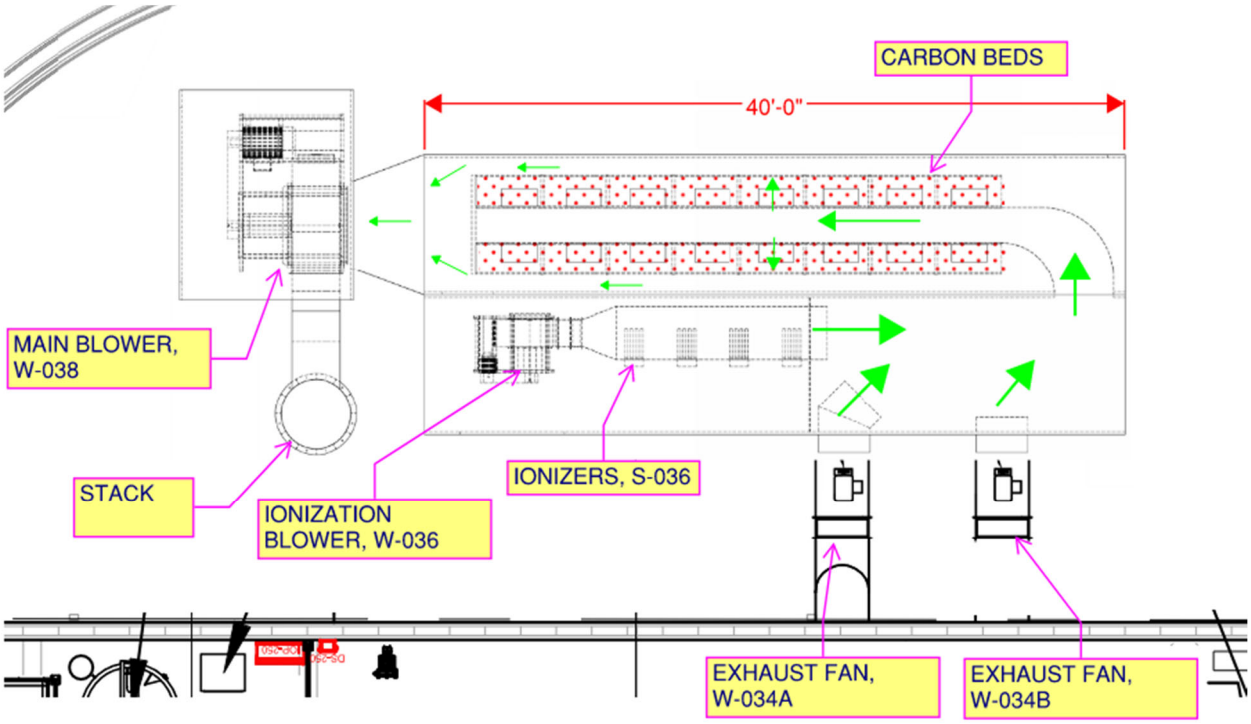

FIGURE 2-4: IONIZATION REACTOR AND CARBON GUARD BED LAYOUT FOR TERTIARY ODOR CONTROL

2.4 Best Management Practices

2.4.1 Inventory Management

Putrescible feedstock will be processed the same day it is received. The receiving bin will be emptied at least once per day and hosed down. This facility will not store feedstock inside the building unless it is palletized and packaged. Cake solids will also be removed from the building daily and not stored in trailers.

2.4.2 Housekeeping

Good housekeeping practices will be adopted as part of normal operations to minimize odors throughout the facility. The SSO receiving area floor will be scraped clean at the end of the day and may be flushed with water. All SSO handling stations and equipment will have wash down hoses nearby to allow for the machines to be cleaned daily. Self-recoiling hose reels will be used wherever practical. Catwalk access, equipment placement, drainage, building materials, and general design will all be assessed during planning to enable easy maintenance and cleaning of all plant areas. Green Era recognizes that keeping the equipment and building clean and free of organics will be critical to maintaining a comfortable and safe working environment.

2.5 Odor Monitoring

Green Era's Owners recognize that odor control is requisite to the success of this facility. Having reliable data is key in managing any process and in evaluating performance. Green Era will take a proactive approach to odor management by implementing odor observation and monitoring as a daily routine.

Green Era employees will monitor odors around the Facility, at the property boundaries, and quantify the relative strength of detected odors using a Nasal Ranger® field olfactometer *(see Figure 2-5)*. The field olfactometer provides a method, recognized by the US Public Health Service and other regulatory agencies, to determine the relative strength of odorous air.

FIGURE 2-5: NASAL RANGER FIELD OLFACTOMETER

The olfactometer dilutes odorous ambient air with odor-free (carbon-filtered) air. The dilution factor is defined as the Dilution-to-Threshold ratio (D/T), which is the number of dilution volumes per part of ambient air needed to make the odorous air non-detectable to the observer. The Nasal Ranger allows two volumes of carbon-filtered air (two carbon filters) to be mixed with specific volumes of odorous ambient air. The dilution factor is adjusted with an aperture dial on the device.

Dilution Factor = Volume of Carbon Filtered Air / Volume of Odorous Air = D/T

The facility will also install a local weather station to log wind direction, temperature, humidity and precipitation at the site. The odor measurements will be documented daily in an electronic log book that can be referenced to the weather conditions at the time of sampling.

The observer will also have the ability to describe the nature of any measured odors in the log and its apparent source. A standardized odor wheel will be developed and maintained for the facility to describe odors using common descriptors to facilitate the identification and discussion of odors. An example of an odor wheel that was developed for composters is shown below (*see Figure 2-6*). Green Era will adapt this wheel to observed odors and consensus descriptors.

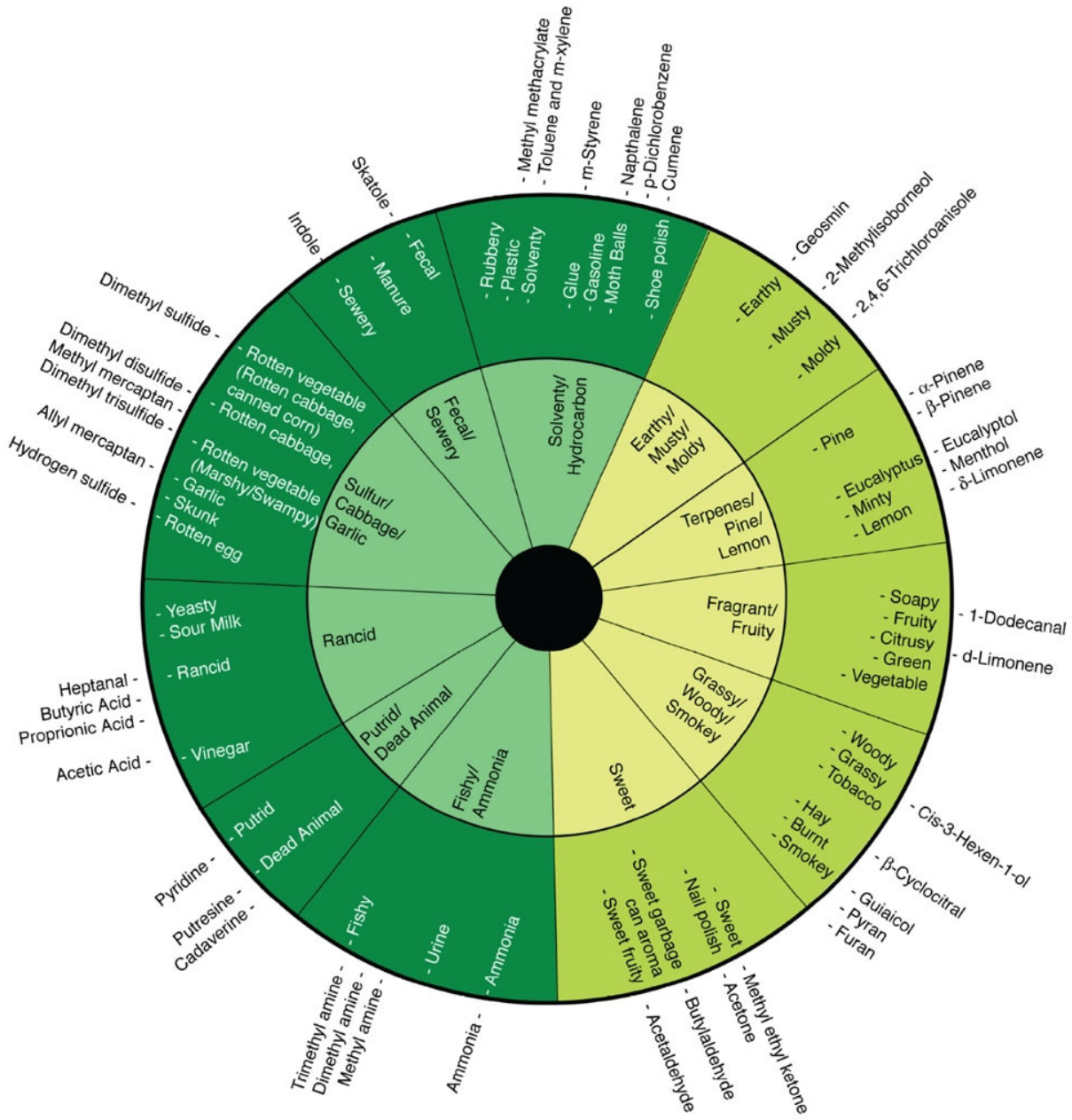

FIGURE 2-6: ODOR WHEEL

Observations will occur three-times daily along a defined onsite survey route. Regular odor observations will be made during facility commissioning prior to and during intermittent processing activities that generate odorous air which is captured and processed through the odor scrubbers.

The monitoring frequency may be reduced after the first year of operation, provided that the facility demonstrates no offsite impacts to the surrounding area. An Odor Monitoring Plan (*MP-09*) that describes the procedures for daily odor observations has been prepared and included individually as part of the Operations Manual. The Odor Monitoring Plan (*MP-09*) is provided as an attachment to this Odor Control Plan (*MP-08*) prior to Appendix A. An Odor Observation Form (*FORM-21-003*) has also been drafted that will serve as a record of the daily odor

observations (see Appendix D). The observation form may be modified when a specific database system is selected to manage and store the collected records, but the basic required information will not change.

Odor complaints will be logged and responded to in a timely and professional manner. Telephone calls will be noted and a summary written. Written complaints, in the form of letters or e-mail will be saved to the record. Any responses or correspondence with the complainant will also be documented. An Odor Complaint Form record has been drafted (*FORM-21-004*). Each event will also be logged by date in an Excel workbook to track occurrences (*LOG-21-005*). Appendix D provides facility forms; Appendix E includes logs.

The Odor Complaint Form may be modified or adapted for the database application chosen to store the records, but the general information collected will remain the same. If the source of the odor is identifiable from a known normal or abnormal operating condition, the cause will be recorded in the complaint log. All odor occurrences that can be traced to a root cause will be recorded in such a way that it is searchable and referenceable to that root cause. When root causes of odor are identified that have generated complaints, an action plan will be implemented to mitigate the odor source or odor causing event. A reasonable timeline will be developed for implementing the controls and responsible parties listed. Success of the mitigation strategy will be determined by the number of subsequent observed occurrences for that cause. A form will be customized to handle the corrective action for odor complaints that follows the principles of eight discipline (8-D) problem solving and will be part of the Facility's overall quality system.

Odor complaints and actions will be maintained at the Green Era facility and will be available for regulatory inspection. Odor complaints and corrective actions will be summarized in the facility's annual report. The plant operations manager will be ultimately responsible for implementing this reporting system and maintaining the records.

3 Training

All employees will receive training on Green Era's Odor control procedures and monitoring practices. Classroom instruction will review the *Odor Control Plan*, as well as standard operating procedures for odor mitigation, odor control equipment, and surveillance. Specific practical training will be given on use of the Nasal Ranger and odor classification descriptors. The importance of accurately recording odor complaints and event logging will be stressed. *The Odor Monitoring Plan (MP-09)* will be reviewed and explained at the same time for employees who may be tasked with daily observations. Plant Operators who are directly responsible for odor surveillance will be trained in the use of the odor monitoring equipment and odor descriptors per the Odor Observation form. Training will be recorded using LOG-21-001 (see Appendix E).

4 Recordkeeping

All records will be stored electronically and kept for at least 36-months from the record date. Records may be sent upon request to any regulatory agency of the City of Chicago or State of Illinois.

See *The Odor Monitoring Plan (MP-09)* for additional recordkeeping and reporting requirements.

5 References

a. MP-09 Odor Monitoring Plan

b. FORM-21-003 Odor Observation Form

c. FORM-21-004 Odor Complaint Form

d. LOG-21-001 Training Log

e. LOG-21-005 Odor Complaint Log

ATTACHMENT TO ODOR CONTROL PLAN
ODOR MONITORING PLAN (MP-09)

ODOR MONITORING PLAN

Doc. No. MP-09

Green Era

Organics Recycling Facility

REVISION LEVEL	DESCRIPTION	ISSUE DATE
R0	INITIAL RELEASE	10/2/21
R1	SECTION 2.1 UPDATED AIR FLOW RATES. ADD TRAINING PLAN REFERENCE IN SECTION 8. ADDED TRAINING LOG DOC. REF.	10/25/21

Contents

1 Purpose 1
2 Self-Monitoring 1
2.1 Odor Emission Points 1
2.2 Odor Monitoring Locations 3
2.3 Odor Monitoring Frequency 5
2.4 Enhanced Odor Monitoring during the first year of operation 5
3 Odor Complaint Documentation 5
4 Actionable Response to Odor Observations 6
4.1 Mitigation Efforts 6
5 Odor Monitoring Procedure 6
5.1 Odor Observation Form 7
6 Training 7
7 Recordkeeping and Reporting 7
8 References 7

1 Purpose

This plan describes the procedures for Odor Monitoring and Surveillance.

2 Self-Monitoring

Green Era will implement a self-monitoring program for environmental odors to document odor occurrences and correlate detected odors with site activity, weather, and time of day to understand how to control and mitigate occurrences through operational changes. Odor monitoring will verify that control measures are effective in eliminating detectable odor emissions from the facility.

2.1 Odor Emission Points

The locations of potential odor emission points are mapped on the following site plan, "Potential Odor Emission Points". The primary control point will be the single exhaust stack from Building B-001 after the carbon bed. When both building fans are running, this will exhaust approximately 38,000 CFM of air from the building combined with 4,000 CFM of air from the ionization reactor for a total of 42,000 CFM. The building will be under negative pressure ventilation, but there is potential when overhead doors are opened for traffic that some odorous air could escape depending on the wind speeds and direction.

The waste gas flare and thermal oxidizer are designed to fully combust the waste gases and the exhaust should not have a detectable odor, but they are still a controlled emission point.

The bolted steel digester tank and feedstock storage tank in the tank yard both are protected from over pressurization and vacuum conditions by relief valves that are mounted to the roof. If biogas is not being removed from the tank by the gas upgrading equipment and/or flare as designed, raw biogas will be released from the pressure relief valves. Hydrogen sulfide will be the predominant odorant in the biogas and will likely be detectable offsite if raw biogas is released. Since the tanks are 50 feet tall, it is unlikely that biogas vented from the tank relief vents would be detected onsite by the plant operators. The plant operators will be aware of the venting from the plant SCADA and they will receive alarms both on the SCADA and mobile devices when the tank pressure rises prior to venting along with alarms for all gas handling equipment. Any periods when the tanks are vented (above the setpoint pressure of 8 in. WC) will be recorded in an electronic log.

An enclosed agricultural building (Pole Barn) is planned in the northwest corner of the site to support Urban Growers truck-farm operations and will provide space for equipment storage and bulk handling of cured compost products. Since any compost materials handled in this facility are fully stabilized and cured, we do not predict any objectionable odors from this building, but we will monitor for odors in this area.

Potential Odor Emission Points

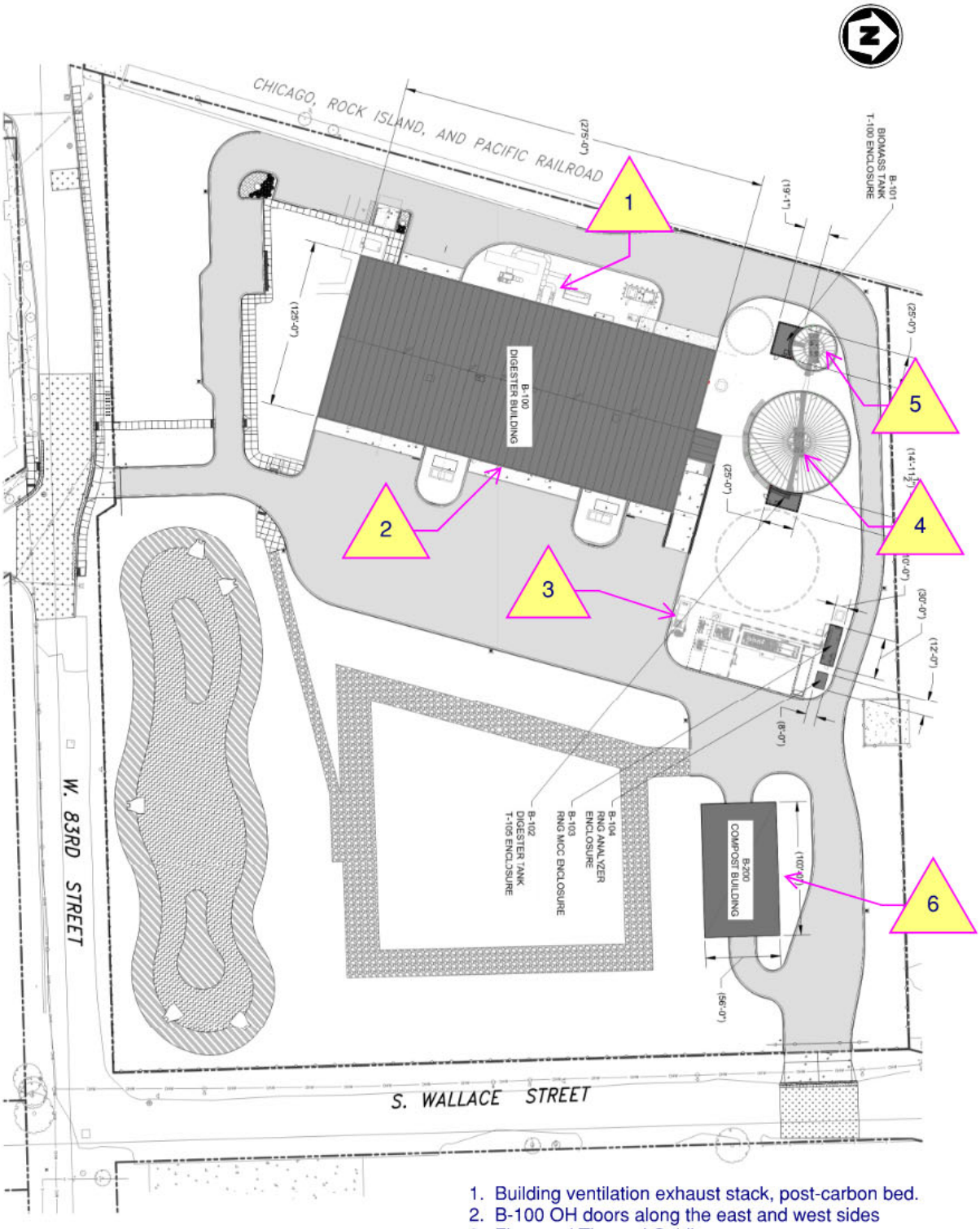

1. Building ventilation exhaust stack, post-carbon bed.
2. B-100 OH doors along the east and west sides
3. Flare and Thermal Oxidizer
4. T-105 (Digester Tank) Pressure Relief Valves
5. T-100 (Biomass Tank) Pressure Relief Valves
6. B-200 OH doors on east and west building ends

2.2 Odor Monitoring Locations

To establish baseline odor data from the food waste processing facility monitoring locations are selected around the site perimeter where observations will be recorded at normal intervals. The odor observations will be correlated with the weather conditions at the time when the observation is taken to note wind direction, wind speed, temperature, humidity, precipitation, and cloud cover. This way upwind and downwind odor observations are recorded.

The odor monitoring locations may be changed by the facility manager after baseline conditions are observed at start-up or at any point in time when changes in seasons, site activity, or operations have influenced detectable odor locations.

A planned odor monitoring route is proposed and shown on the Site Odor Monitoring Locations / Survey Route as follows. The monitor would start at on the east side of the building and proceed along the highlighted route towards the Wallace Street gate.

Initially, 6 checkpoint locations are proposed along the established route and observations will be recorded for these locations, even if no odor is detected. If odor is detectable at any other locations along the established route, those locations will be noted separately in the odor report log.

The 6 observation points are described below.

1. East side of the Operations Building
2. Wallace Street entrance
3. Corner of W 83rd and Wallace St.
4. W 83rd St Entrance
5. SW property line at drive.
6. NW property line at drive.

These locations may be marked with monuments or signage to ensure different observers follow the same route and record conditions at the same locations.

If odors complaints are received from offsite locations, additional offsite monitoring points may be added to the self-monitoring plan if odors from emission points follow a dispersion pattern that are not detectable onsite, but are detected offsite.

Site Odor Monitoring Locations / Survey Route

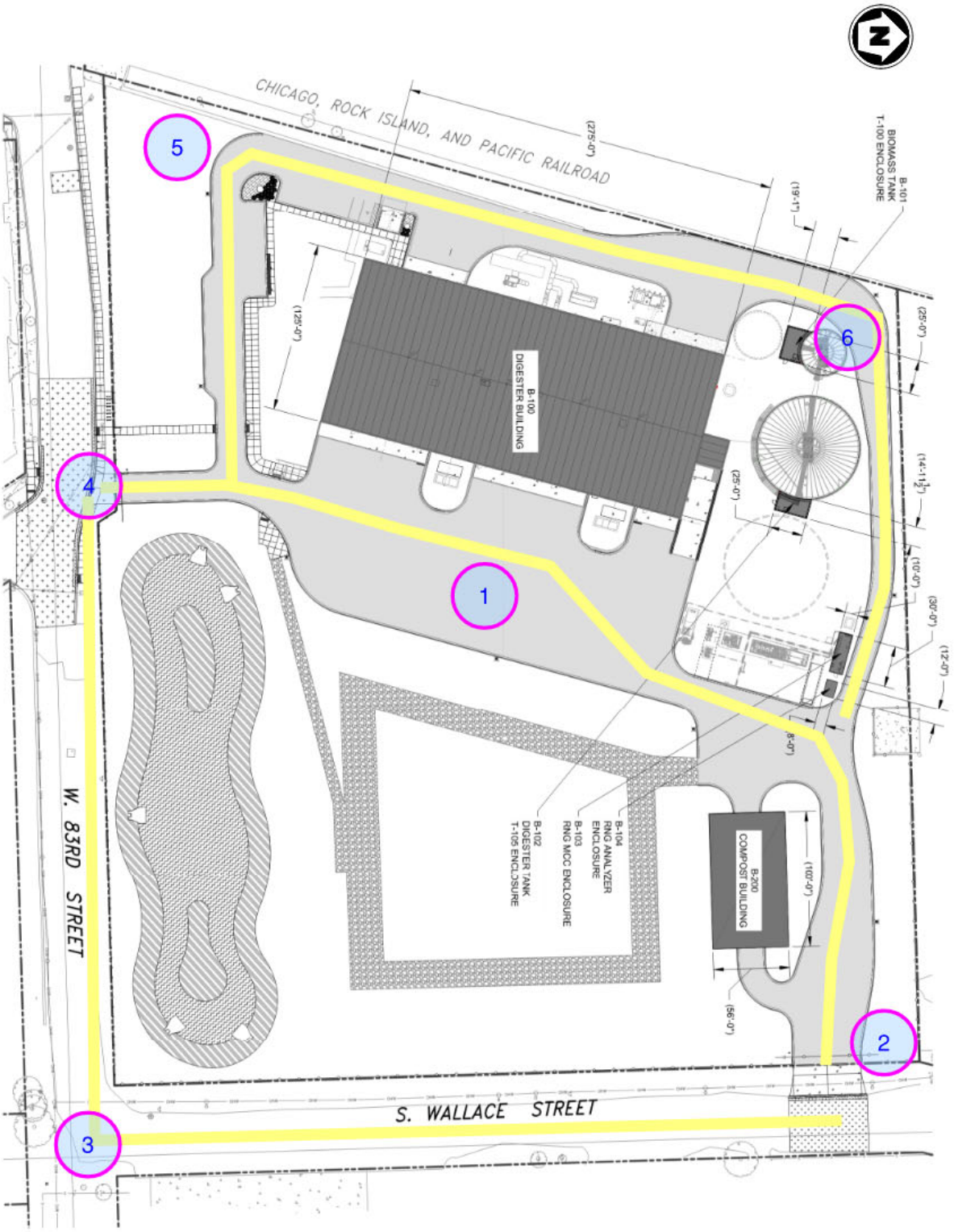

2.3 Odor Monitoring Frequency

Odor monitoring frequency will be determined by the plant management team (Plant Manager, Plant Engineer, Maintenance Mechanic, and Maintenance Engineer). Initially, odor observations will be taken at 7:00 and at 18:00 hours. Additional observation times may be added if odor is detected due to changes in site activity, weather conditions, or data from offsite receptors. The facility will be staffed 24/7 and these observations will be made daily. If no onsite odor is regularly detected, the monitoring frequency may be reduced.

The early morning observation is important because of usual calm winds and possible air inversion, when cooler air is present near the surface and warmer air is aloft. This temperature inversion can suppress normal convection currents and hold emissions close to the ground.

During the 18:00 hour observation, most waste processing activity will still be active inside the main facility. Since most people are home in the evenings and enjoying seasonal outdoor activities, if offsite odors are detected, the odors are most likely to be detected and reported within this timeframe. If an offsite odor complaint isn't reported the same day, the self-monitoring log can help establish what conditions led to the offsite odor and if any onsite observations could be effective in predicting the offsite occurrence.

2.4 Enhanced Odor Monitoring during the first year of operation

During the first year of operation, an additional odor observation will be made at 11:00 on days when waste is being received, Monday through Saturday.

Regular odor observations will be made during facility commissioning prior to and during intermittent processing activities that generate odorous air which is captured and processed through the odor control system. For example, digestate dewatering will only occur on one shift. To understand if dewatering affects onsite odors, odor observations downwind of the carbon bed outlet will be made prior to starting the belt presses, during dewatering, and after dewatering.

Waste processing activities with potential to produce odorous air:

- Dewatering
- Waste sorting/feedstock preparation
- Truck receiving
- Truck loading

If detectable odors are observed during certain site activities, mitigation efforts will be taken to reduce the odor from the operation or process. Green Era will maintain documentation of these observations and concurrent activity to establish an operational baseline. Weather observations will also be noted.

The monitoring frequency may be reduced after the first year of operation, provided that the facility demonstrates no offsite impacts to the surrounding area.

3 Odor Complaint Documentation

Odor complaints that are reported directly to Green Era or reported through other agencies will be documented in a searchable and sortable database or electronic log.

The following information will be entered with the record when available.

- Contact information
- Time and observed duration of occurrence(s)
- Location where the odor was observed (address or GPS)

- Odor description
- Any details on how the odor affected them.
- Verbatim transcription if available

Additionally, the record will be cross-referenced with weather conditions at the site at reported time of occurrence. The Green Era operator or manager should also note in the record any know site activity at the time that may have contributed to the source of the odor. The operator may identify possible causes in the record. Specific categories should be developed so that the records can be sorted for multiple occurrences from the same expected source.

Data will be recorded electronically whenever possible directly in the field through a tablet or smart-phone application. Paper records will be entered within one week of receipt into the electronic database. An Odor Complaint Form (*FORM-21-004*) has been prepared as a template for recording complaint details. Fields are provided for standard information that the investigator should record. This form may be filled out with a pen or completed electronically. Each Odor Complaint record should also be logged by date to track occurrences (*LOG-21-005*).

4 Actionable Response to Odor Observations

If odor is detected at the fence line through self-monitoring or from off-site complaints, a standard corrective action procedure will be followed to determine what steps will be taken to reduce occurrence and severity of the odor.

4.1 Mitigation Efforts

Odor monitoring is undertaken to evaluate the effectiveness of odor mitigation practices and control devices. If the planned odor mitigation strategies are found to be ineffective, another mitigation strategy will be planned and implemented. Consultation may be sought from outside experts with experience in odor control. This process will continue until the facility is successful in controlling nuisance odors.

Green Era will maintain full transparency through all steps of the decision-making process with stakeholders. This information may be conveyed in a timely manner through a public website, memorandums, and public meetings. The communication will address the following topics:

- Key-decision makers and experts involved in finding solutions
- Reasoning used in determining the next steps and selection of mitigation efforts
- Timing to implement
- Results of implementation, including accounting of odor occurrences and complaints

5 Odor Monitoring Procedure

The sense of smell is subjective. This operating procedure describes the common process to observe and describe odors on the Green Era site in a manner that is repeatable and comparable between different observers.

Starting at the prescribed time, drive or walk the current odor observation route from points 1 through 6. If driving with a truck or car or utility vehicle, proceed slowly (<5 MPH) and keep the driver's side window lowered to sense odor occurrences along the route outside of the designated locations. Park the vehicle at each posted location, walk away from the vehicle and breathe normally. If an odor is detected, use the Nasal Ranger to quantify the odor intensity per the Nasal Ranger work instructions. If applicable, also measure H2S concentration in parts per million.

Record the observations. Either use the paper forms or record on your mobile device in the designated application form. The form will follow a questionnaire type format with a limited number of choice descriptors. If

the source of the odor is known or suspected, note this in the record. Additional fields will be provided for your own notes. Type these notes or use your mobile device's built-in voice-to-text transcriber to enter data into this field. Photographs may also be attached to the record if needed. The record will be time stamped, so enter the notes while still at the observation point. After entering the observation, move to the next location. GPS coordinates for your position should be automatically recorded.

If odor is detected at other locations along the route, determine the perimeter of where the odor is noticeable and save additional records with your mobile device. Record as many observations as necessary to fully characterize the odor and affected area.

After completing the route, review the records either on your mobile device or on an office computer to correct any mistakes or amend records for clarity. Add current weather data to the records if not automatically entered by the system.

If an odor was observed, notify the appropriate plant personnel.

5.1 Odor Observation Form

An *Odor Observation Form* (*FORM-21-003*) has been prepared. The form may be filled out with a pen or completed electronically.

6 Training

All employees will receive training on Green Era's Odor control procedures and monitoring practices. Classroom instruction will review the *Odor Control Plan*, as well as standard operating procedures for odor mitigation, odor control equipment, and surveillance. Specific practical training will be given on use of the Nasal Ranger and odor classification descriptors. The importance of accurately recording odor complaints and event logging will be stressed. *The Odor Monitoring Plan (MP-09)* will be reviewed and explained at the same time for employees who may be tasked with daily observations. Plant Operators who are directly responsible for odor surveillance will be trained in the use of the odor monitoring equipment and odor descriptors per the Odor Observation form. Training will be recorded using LOG-21-001.

7 Recordkeeping and Reporting

All records will be stored electronically and kept for at least 36-months from the record date. Records may be sent upon request to any regulatory agency of the City of Chicago or State of Illinois.

Notification may be required by some permits. The IEPA Air Permit Application will propose that when odor complaints are received, IEPA will be notified within 24-hrs, with follow-up within 7-days of actions conducted to address such odor complaints. Any additional permit requirements for notification or summary report submissions related to odor observations, odor complaints, equipment malfunction (see LOG-21-008 in Appendix E), or venting (see LOG-21-007 in Appendix E) occurrences should be enumerated here. Training will be recorded using

8 References

a. MP-08 Odor Control Plan
b. FORM-21-003 Odor Observation Form
c. LOG-21-001 Training Log
d. LOG-21-007 Air Emissions Venting Log
e. LOG-21-008 Air Emissions Control Equipment Maintenance Log

ODOR CONTROL (MP-08) APPENDIX A
ODOR CONTROL EQUIPMENT

Appendix A: ODOR CONTROL PLAN

Odor Control Equipment
Component Specs

Prepared By

Green Arrow Engineering

2759 Long Road

Wooster, OH 44691

REVISION LEVEL	DESCRIPTION	ISSUE DATE
R0	INITIAL RELEASE	10/19/21

Table of Contents

S-032 Ionization Reactor Bank	5-bulb fixtures and power supply	1
S-036 Ionization Reactor Bank	24-bulb fixtures and power supply	5
ENCL-036 Mechanical Container	Container for ionization reactor and blower	9
ES T-038	Vertical deep bed carbon filter	12
ES W-030ABCD	Building make-up air units MUA-950 and MUA-951	16
ES W-032AB	Ionization Circulation Fan, building	31
ES W-032CDEF	Ionization Circulation Twin Fan Unit, building	38
ES W-034A	Building exhaust fan EF-952	46
ES W-034B	Building exhaust fan EF-953	54
ES W-036	Ionization Reactor Blower	62
ES W-0389	Odor scrubber blower (main fan on carbon bed)	71

GREEN ARROW ENGINEERING	**Green Era** **Equipment Spec** **Odor Control Equipment**	

S-032 Ionization Reactor Bank

5-bulb fixture and power supply

REVISION LEVEL	DATE	DESCRIPTION	BY
R0	10/14/21	INITIAL RELEASE	NMAST

GREEN ARROW ENGINEERING	**Green Era** **Equipment Spec** **Odor Control Equipment**	

Section 1 - Basic Equip. Data		
1.0	Tag No.	S-032x-y where x corresponds to the fan letter and y is the unit number
1.1	Air from	W-032x, circulating room air via filter
1.2	Air to	Room
1.3	Purpose	Create a high charge density ionized air flow using circulating indoor air and distribute in areas of high odor potential. Ions to oxidize odorants in the building air prior to improve indoor air quality.

Section 2 – Fluid Properties								
2.0	Fluid Desc.	Indoor odorous air, circulation unit						
2.1	TS%	N/A	2.2	RH range	50-80%	2.3	Temp. range	55 - 100° F
2.4	S.G.	1	2.5	Viscosity	0.0187 cP	2.6	Phase	Gas
2.7	Flammable		No					
2.8	Abrasives	Moisture may be present.						
2.9	Corrosives	None						
2.10	Notes	Air is filtered prior to bulbs to extend bulb life.						

Section 3 – System Requirements		
3.0	Flow Range	2,000 CFM per 5-bulb set for this application
3.1	Duty	Continuous
3.2	Flow Velocity	~333 FPM, 5.6 FPS, 1.7 m/s

Section 4 - Power supply and bulbs					
4.0	Tube Type	F 530 (530mm lg)	4.1	Mfg.	Varionix of Switzerland
4.2	No. of Tubes	5	4.3	Model No.	KH5F-CRF-VTN-F
4.4	Supply Voltage	115VAC, power cable with C14 plug end	4.5	Weight	20 lbs, 9 kg
4.6	Controller	Power supply, switch, ICS controller. 1 A fuse. Power 86 watts			
4.5	Basic Dim	W x L x H inches: 10.4 x 26.8 x 8.27, mm: 264 x 680 x 210			

KH5F Series

Pollutants Degradation | Air Disinfection | Odor Elimination

Overview

The System KHF5 consist of a Base-System with five horizontal aligned BENTAX ® Ionization-Tubes. It can be mounted both outside with a mount-frame or inside in air-duct or Air Handling Unit (AHU). Different power-connection options are available.

Used for Air Cleaning, Air refreshing, Odor Elimination, Degradation of pollutants, Air sterilization, Air decontamination Installations in Air-conditioning systems (HVAC systems), air-conditioning and ventilation systems, and exhaust air-canals in industrial, office buildings, manufacturing facilities, wastewater treatment plants, waste air disposal

Example illustrations: System mounted in an air-duct

Specifications

Supply Voltage	**230 VAC ± 10% 50Hz 115 VAC ± 10% 60Hz**
Nominal Power Rating	**86 W**
Air Treatment up to *	**~ 4000 m^3/h**
Weight	**9 kg**

*** Depending on: Air Quality, VOC, VVOC, Air Change Rate**

Base Systems: KH5F

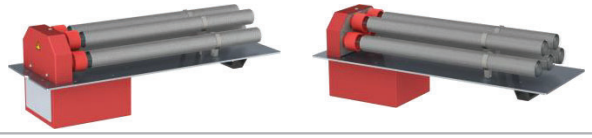

Power Connection Option: KH5F-[y]z

C1 Connection Panel, C14 socket ; Error Indicator; Switch; Fuse Box

C1C Connection Panel ,C14 socket ; Error Indicator; Manual/Auto switch ; Fuse Box ; Connector for remote on-off & Error output; with Controller Board

R Connection Panel; Round Plug & Connector 3 poles; IP64, external power controller needed

Other Connector Options on request

Mount-Frame Option: KH5F-y[z]

F Mounting Frame Set

Order Number KH5F System Configuration

Type	Voltage	Order #
KH5F-C1	230	KH-05-A-C1
	115	KH-05-B-C1
KH5F-C1F	230	KH-05-A-C1F
	115	KH-05-B-C1F
KH5F-C1C	230	KH-05-A-C1C
	115	KH-05-B-C1C
KH5F-C1CF	230	KH-05-A-C1CF
	115	KH-05-B-C1CF
KH5F-R	230	KH-05-A-R
	115	KH-05-B-R
KH5F-RF	230	KH-05-A-RF
	115	KH-05-B-RF

Copyright by Varionix Switzerland
Bentax® worldwide trademark of Varionix

KH5F Dimensions [inch] mm

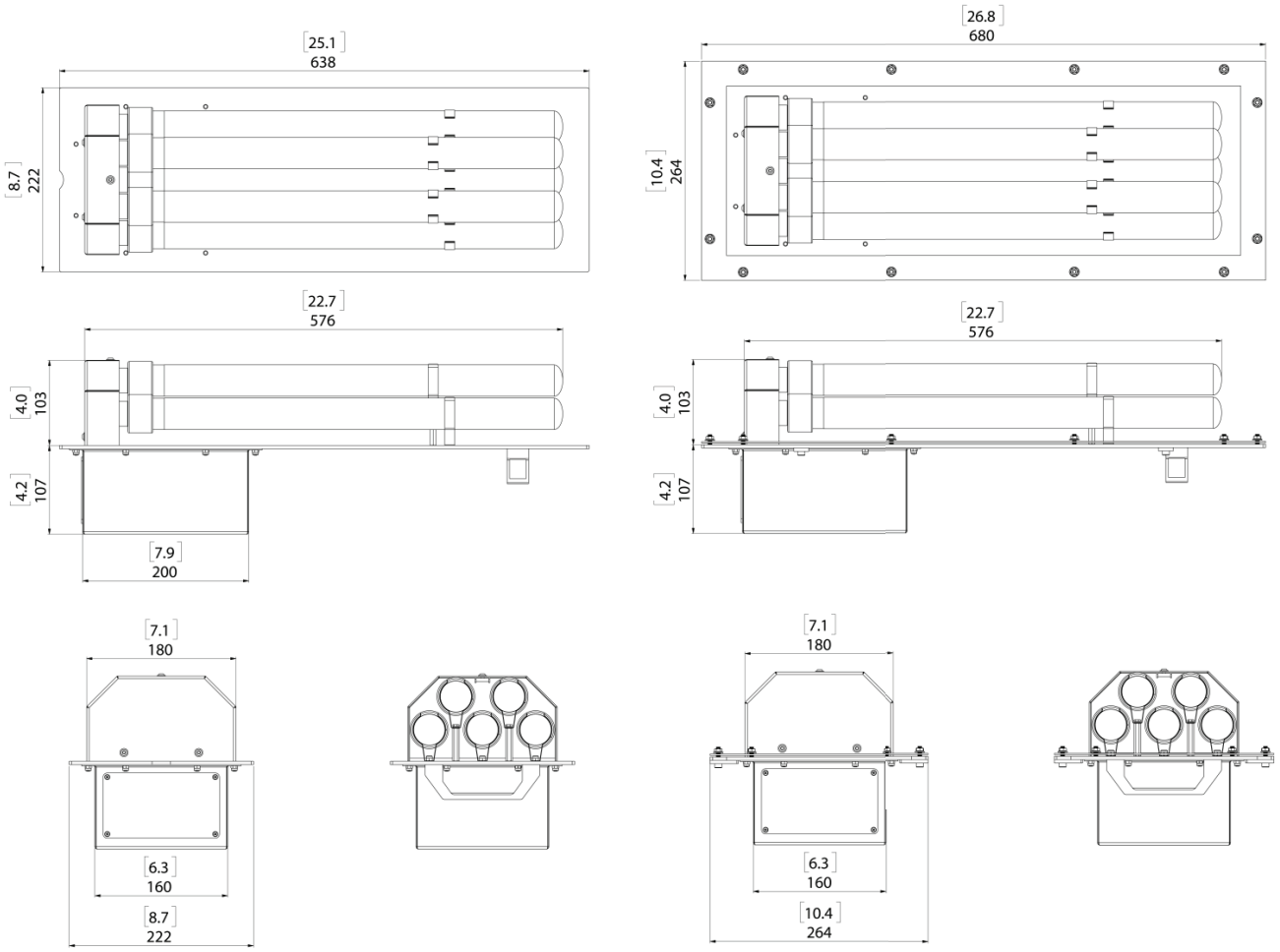

Copyright by Varionix Switzerland
Bentax® worldwide trademark of Varionix

S-036 Ionization Reactor Bank

Four 24-bulb fixtures and power supply

REVISION LEVEL	DATE	DESCRIPTION	BY
R0	10/14/21	INITIAL RELEASE	NMAST

GREEN ARROW ENGINEERING	**Green Era** **Equipment Spec** **Odor Control Equipment**	

Section 1 - Basic Equip. Data		
1.0	Tag No.	S-036-1, S-036-2, S-036-3, S-036-4
1.1	Air from	W-036, fresh air supply
1.2	Air to	U-038 Mixing plenum with building exhaust air (W-034A/B) prior to carbon guard bed (T-038A)
1.3	Purpose	Create a relatively high charge density ionized air flow using fresh outside air and immediately mix with 9 parts exhaust air from building. Ions to oxidize remaining odorants in the building exhaust air prior to the carbon guard bed to minimize bed loading and extend bed life. Ions can also regenerate carbon that has captured VOCs. But H2S that is chemically bonded to impregnated carbon cannot be removed.

Section 2 – Fluid Properties								
2.0	Fluid Desc.	Fresh Outdoor Air						
2.1	W.P.	2 inWC	2.2	RH	50-100%	2.3	Temp. range	5°-115° F
2.4	S.G.	1.0	2.5	Viscosity	Std.	2.6	Phase	Gas
2.7	Filtration Level		2-inch MERV?					
2.8	Abrasives	N/A						
2.9	Corrosives	N/A						
2.10	Notes	Fresh air used here to extend bulb life.						

Section 3 – System Requirements		
3.0	Flow Range	4120 CFM (7000 m3/h) - mixing downstream with 38,000 CFM
3.1	Duty	Continuous
3.2	Fan SP	2 inWC, 500 Pa
3.3	Flow Velocity	335 FPM, 5.6 FPS, 1.7 m/s

Section 4 - Power supply and bulbs					
4.0	Tube Type	F 530 (530mm lg)	4.1	Mfg.	Varionix of Switzerland
4.2	No. of Tubes	24	4.3	Model No.	IM24V-N-24xVTN-F
4.4	Supply Voltage	115VAC, power cable with C14 plug end	4.5	Weight	38 lbs, 17.3 kg
4.6	Controller	Power supply, switch, 1A fuse, ICS controller			
4.5	Basic Dim	W x L x H inches: 16.3 x 22.7 x 25.6, mm: 416 x 576 x 650			

IM 24 Series

Pollutants Degradation | Air Disinfection | Odor Elimination

Overview

IM24 is a system with 24 vertical aligned F-tubes, intended to mount in Air Handling Units (AHU) and/or Air-Ducts as Stand or Slide-In Installations
Applications are pollutants degradation, exhaust air treatment, air refreshment, air disinfection and odor elimination for industrial and commercial use.

Example illustration: System mounted in an air-duct as slide-in

Example illustration: System mounted standing in an air-duct

Specifications

Supply voltage	230VAC 50Hz or 115VAC 60Hz
Nominal Power Rating	480 W
Bentax® Tubes	Tubes VTN
Air treatment up-to *	18000 m^3/h

** Depending on: Air Quality, VOC, VVOC, Air Change Rate*

IM24 Base System Order Numbers

Type	Volt	Order #
IM24-C1	230V	IM-24-A0-C1
IM24-C1	115V	IM-24-B0-C1
IM24-C1C	230V	IM-24-A0-C1C
IM24-C1C	115V	IM-24-B0-C1C

Mount Options

IM24-OBF	---	IM-24-1Z-01
IM24-OMF	---	IM-24-1Z-02
IM24-OSF	---	IM-24-1Z-03

Base System IM24-xxx

IM24-xxx Base System
Included are 24 VTN-F Tubes as standard equipment.
-xxx: Power connector and Control unit equipment to choose

IM24-xxx Power Connector & Controller

-C1
Connection Panel, C14 socket ; Error Indicator; Switch ; Fuse Box

-C1C
Connection Panel ,C14 socket ; Error Indicator; Manual/Auto switch ; Fuse Box ; Connector for remote on-off & Error output; System equipped inside with Controller Board

Mounting Options

IM24-OBF
Set with Foot holder and Handles for installing the System on the floor in Air-Duct or Air Handling Unit

IM24-OMF
Set with Mount Frame for installing the System outside of an Air-Duct or Air Handling Unit.

IM24-OSF
Safety Frame
Mandatory with IM24-OMF
Optional with IM24-OBF

Copyright by Varionix Switzerland
Bentax® worldwide trademark of Varionix

Floor Standing Mounting Combinations

IM24-xx and **IM24-OBF = Floor Standing**

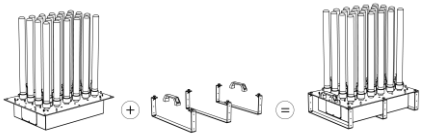

Floor Standing with Option IM24-OSF

Outer Panel Mounting (Slide-In) Combinations

IM24-xx and **IM24-OMF with IM24-OSF**
Must be ordered together

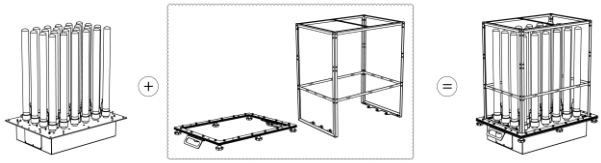

Dimensions (mm)

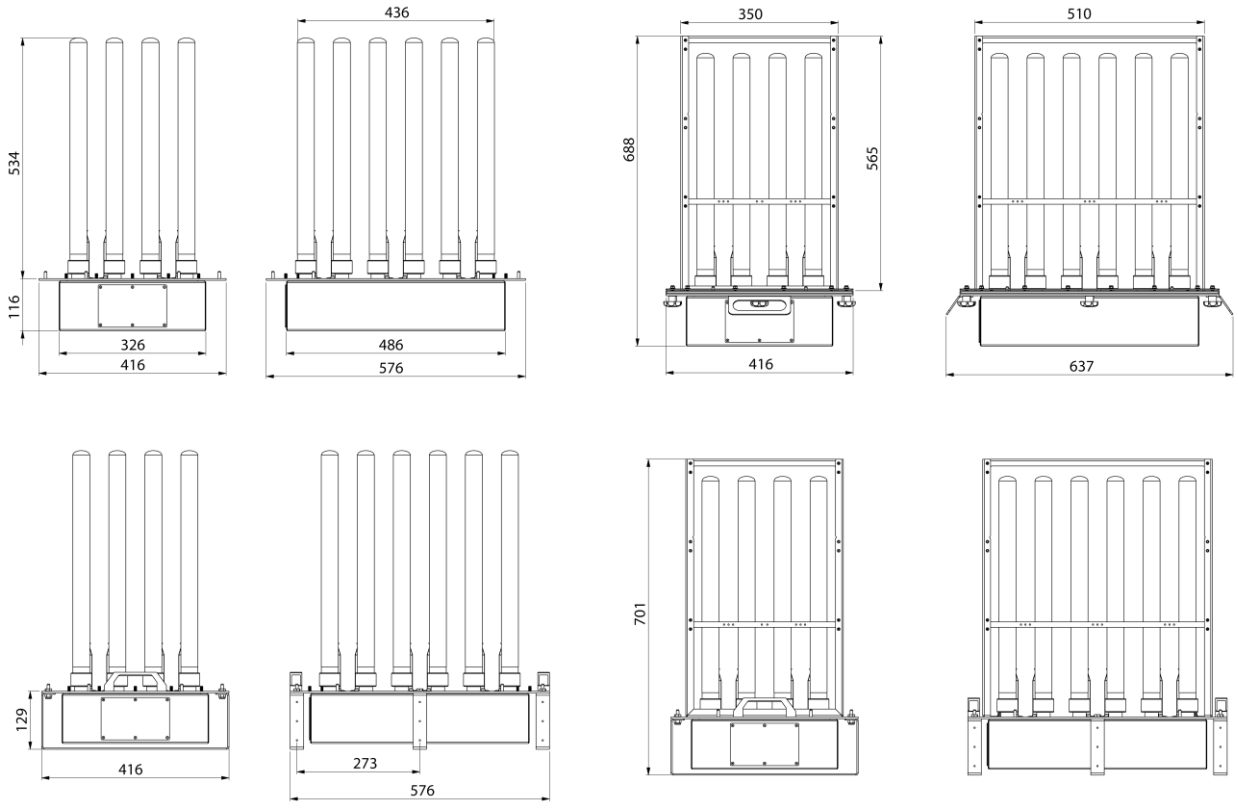

ENCL-036 Mechanical Container

High-cube ISO shipping container, 40-ft std. length. Modified to house blower and ionization banks in duct

REVISION LEVEL	DATE	DESCRIPTION	BY
0	10/18/21	INITIAL RELEASE	NMAST

Section 1 - Basic Container Information		
1.0	Tag No.	ENCL-036
1.1	Dimensions	9’-6” high x 8’-0” outside. 8’-10” x 7’-8” inside. 40’ long.
1.2	Construction Materials	Steel ISO container. Paint with industrial epoxy. Interior carbon cells from 304SS.
1.3	Foundation	By Others, Provide Loading
1.4	PE Stamp	State of Illinois for foundation. Container is not occupied.
1.5	Site Std. Conditions	See separate “Site Conditions for Green Era” specification document
1.6	Weight	Empty container is around 10,000 lbs. Estimated total weight <15,000 lbs
1.7	Electrical Connections	Lighting circuit in blower room, 110 VAC. Blower power, 3-ph, 460. Mount disconnect for blower inside door.
1.8	Insulation	Exterior container walls should be insulated to prevent condensation during winter operation. R10 or more. Dow board is acceptable or closed-cell spray foam.
1.9	Interior Partitions	Create interior partitions from mild steel sheet and framing members.

Section 2 – Fluid Properties – channeled through contact plenum								
2.0	Fluid Desc.	Odorous air from building, 38,000 CFM						
2.1	TS%	N/A	2.2	RH range	60-85%	2.3	Temp. range	55 - 100° F
2.4	S.G.	1	2.5	Viscosity	0.0187 cP	2.6	Phase	Gas
2.7	Flammable		No					
2.8	Abrasives	Dust and moisture will be present.						
2.9	Corrosives	H2S < 5 PPMV, NH4 < 10 PPMV, water vapor						
2.10	Notes	Combines with flow from ionization blower W-036 @ 4120 CFM						

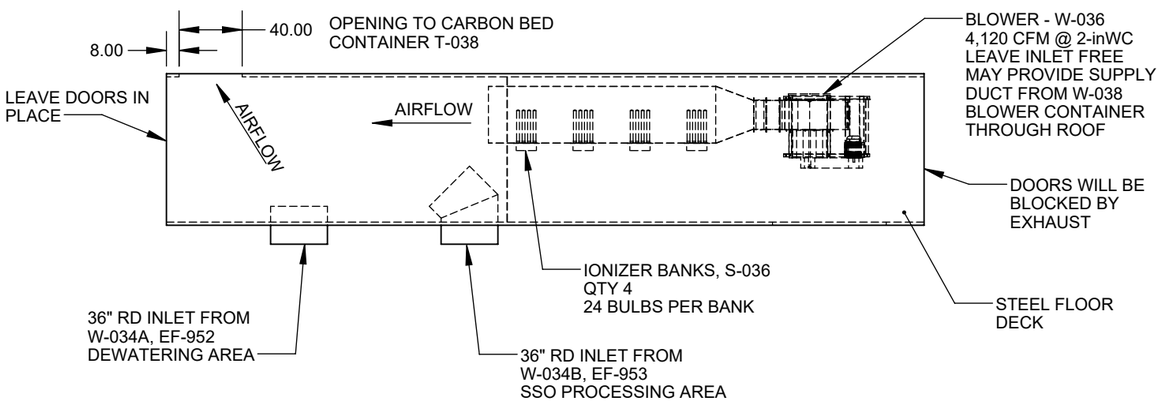

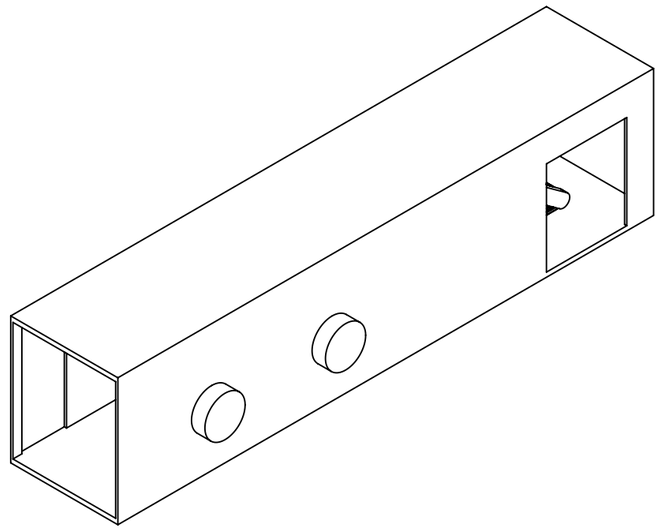

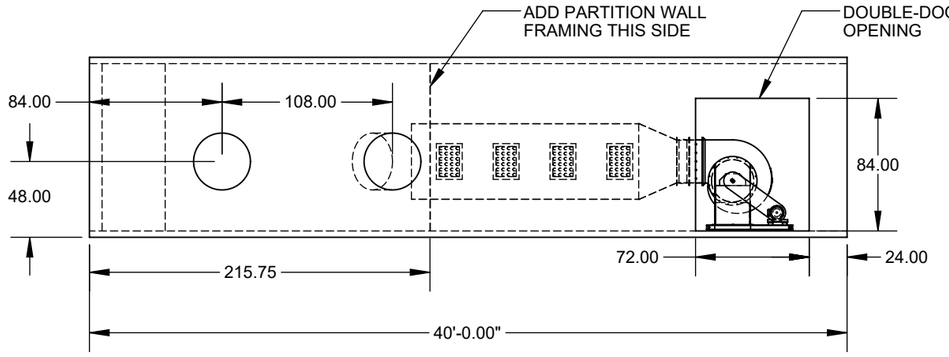

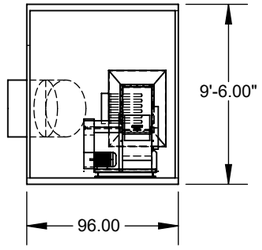

NOTES:
1. MAKE FROM 40' ISO HIGH CUBE CONTAINER
2. EMPTY CONTAINER WEIGHT BEFORE MODIFICATIONS, 10,000 LBS
3. EXPECTED WEIGHT AFTER MOD. <15,000 LBS

ECN	REV.	DESCRIPTION	DATE	APPROVED

REVISIONS

MATERIAL

SURFACE TREATMENT

EQUIPMENT LETTER

EQUIPMENT AREA

WEIGHT

3rd ANGLE PROJECTION

- NOTICE -
The drawing and information contained within this document are the sole property of GAE LLC and may not be copied or transferred without the written consent of GAE LLC. The recipient of this document must use the information provided exclusively for reasons beneficial and in no way detrimental to GAE LLC. The receiver shall return this document after the completion of its use or upon request, either written or verbal. Any violation of these terms may result in legal action submitted in a court of law. All rights reserved.

	DATE	NAME
DESIGNED	10/18/21	NMAST
CHECKED		

SCALE 1:96

SHEET # 1 of 1

GREEN ARROW ENGINEERING
2759 Long Road Wooster, OH 44691

UNLESS OTHERWISE SPECIFIED
DIMENSIONS ARE IN INCHES
TOL. ON ANGLES ±1°
TOL. ON 1 PLACE DECIMALS ±0.25

DIMENSIONING & TOLERANCING IN ACCORDANCE WITH ASME Y14.5M-1994

CUSTOMER NAME

PROJECT NO.

TITLE
MECHANICAL CONTAINER IONIZATION REACTOR

FORMAT B

DRAWING NO. 21-400

T-038 Carbon Filter Container

High-cube ISO shipping container, 40-ft std. length. Modified to use as a vertical deep bed carbon filter to control odors from the building exhaust air

REVISION LEVEL	DATE	DESCRIPTION	BY
0	10/17/21	INITIAL RELEASE	NMAST

Section 1 - Basic Container Information		
1.0	Tag No.	T-038
1.1	Dimensions	9’-6” high x 8’-0” outside. 8’-10” x 7’-8” inside. 40’ long.
1.2	Construction Materials	Steel ISO container. Paint with industrial epoxy. Interior carbon cells from 304SS.
1.3	Foundation	By Others, Provide Loading
1.4	PE Stamp	State of Illinois for foundation. Container is not occupied.
1.5	Site Std. Conditions	See separate “Site Conditions for Green Era” specification document
1.6	Weight	23,747 lbs empty. 55,747 lbs with carbon
1.7	Electrical Connections	None
1.8	Insulation	Exterior container walls should be insulated to prevent condensation during winter operation. R10 or more. Dow board is acceptable or closed-cell spray foam.

Section 2 – Fluid Properties – channeled through plenums and through carbon								
2.0	Fluid Desc.	Odorous air from building, 38,000 CFM						
2.1	TS%	N/A	2.2	pH range	N/A	2.3	Temp. range	55 - 100° F
2.4	S.G.	1	2.5	Viscosity	0.0187 cP	2.6	Phase	Gas
2.7	Flammable		No					
2.8	Abrasives	Dust and moisture will be present.						
2.9	Corrosives	H2S < 5 PPMV, NH4 < 10 PPMV, water vapor						
2.10	Notes	Combines with flow from ionization blower W-036 @ 4120 CFM						

Section 3 – Activated Carbon								
3.0	Type	Pelletized (extruded) carbon, 4mm size, optimized properties for sewage odor control. High H2S and VOC loading capacity.						
3.1	Hardness	95+	3.2	Density	26-30 lbs/CF	3.3	H2S cap.	0.3 g/cc min
3.4	Pressure loss	From 1.25 inWC/ft. of bed for 80 FPM airflow rate, loose pack						
3.5	Products	Calgon: Minotaur OC, Evoqua Midas OCM						
3.6	Corrosives	H2S < 5 PPMV, NH4 < 10 PPMV, water vapor						
3.7	Notes	May substitute for engineer approved equal.						

MINOTAUR™ OC

High Capacity Activated Carbon for Odor Control

CALGON CARBON CORPORATION

Description

MINOTAUR™ OC is a patented high capacity pelletized activated carbon that has been developed specifically for odor removal from sewage treatment operations. This product provides very high adsorption capacity for H_2S and adsorbs volatile organic compounds (VOCs) far more effectively than other high H_2S capacity media.

MINOTAUR™ OC is a single cycle product that is disposed after its virgin capacity is spent. MINOTAUR™ OC is capable of being safely disposed of in municipal landfills or via incineration.

Applications

MINOTAUR™ OC is designed for high capacity single use odor removal applications in sewage treatment. The product is ideal for use at pump stations and treatment plants where both H_2S and organic odors are a problem. MINOTAUR™ OC has been designed as a complement to Calgon Carbon Corporation's catalytic CENTAUR® HSV, which achieves the maximum H_2S capacity on activated carbon though multi-cycle use and in situ water regeneration. MINOTAUR™ OC is the high H_2S capacity alternative to CENTAUR® HSV when potable water is not available for water wash/regeneration.

Regeneration

MINOTAUR™ OC is a one-use carbon and is not regenerated in place. For applications where potable water is available, Calgon Calgon Carbon Corporation recommends using Centaur® HSV, an activated carbon with the highest H_2S capacity in the industry, achieved through its water regenerability.

Typical Properties

H_2S Capacity	0.3 g H_2S/cc carbon (min)
Hardness Number	95 (min)
Particle Size	
MINOTAUR™ OC_4	4 mm
MINOTAUR™ OC_3	3 mm

The determination of H_2S capacity will be made through the use of ASTM Test Method D-6646.

Pressure Drop in a Deep Bed Odor Control Unit

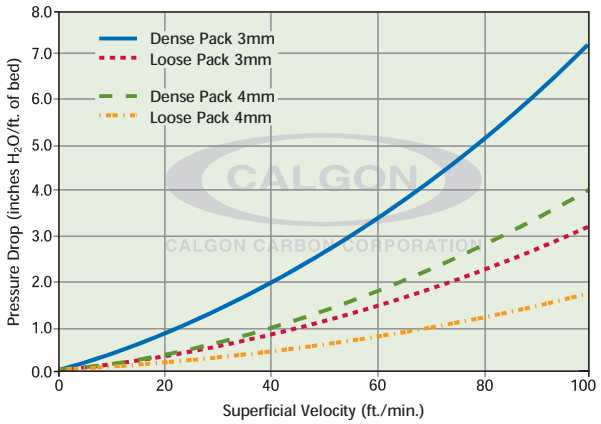

Features / Benefits

Features	Benefits
Not caustic impregnated	Heat excursion potential caused by caustic impregnants is eliminated thus making operations safer. In contrast to caustic impregnated carbons, MINOTAUR™ OC has organic capacity equal to other virgin carbons.
Pelletized product	MINOTAUR™ OC is an extruded carbon pellet of uniform size (3 mm or 4 mm diameter) providing a lower pressure drop than granular products, thereby reducing fan horsepower requirements and energy consumption.

Design Considerations

Condensation of water on the carbon will reduce its performance; therefore, devices to prevent free water condensation are recommended.

MINOTAUR™ OC is ideal for use in a typical packed bed. The bed depths typically range from 12" to 36" depending on the desired total pressure drop and on-stream time. For assistance in the design of a carbon system, please contact your Calgon Carbon Technical Service Representative.

Safety Message

Wet activated carbon preferentially removes oxygen from air. In closed or partially closed containers and vessels, oxygen depletion may reach hazardous levels. If workers are to enter a vessel containing carbon, appropriate sampling and work procedures for potentially low oxygen spaces should be followed, including all applicable Federal and State requirements.

CALGON CARBON CORPORATION

Making Water and Air Safer and Cleaner

Calgon Carbon Corporation
P.O. Box 717
Pittsburgh, PA USA 15230-0717
1-800-422-7266
Tel: 1-412-787-6700
Fx: 1-412-787-6713

Chemviron Carbon
European Operations of
Calgon Carbon Corporation
Zoning Industriel C de Feluy
B-7181 Feluy, Belgium
Tel: + 32 (0) 64 51 18 11
Fx: + 32 (0) 64 54 15 91

Calgon Carbon Asia PTE LTD
9 Temasek Boulevard
#08-01A Suntec Tower Two
Singapore 038989
Tel: + 65 6 221 3500
Fx: + 65 6 221 3554

Your local representative

Copyright© 2007 Calgon Carbon Corporation, all rights reserved.

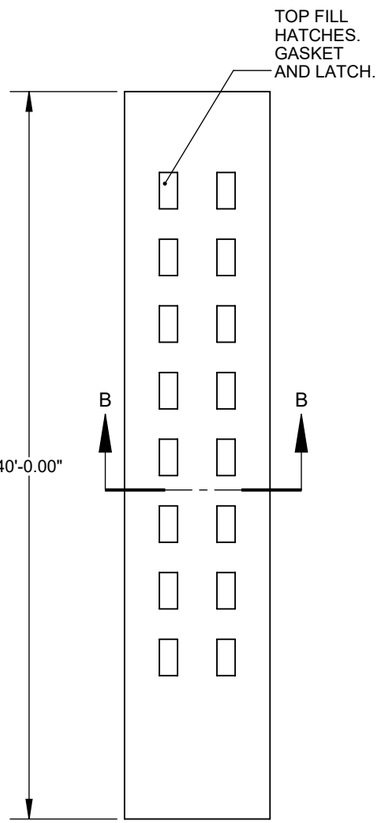

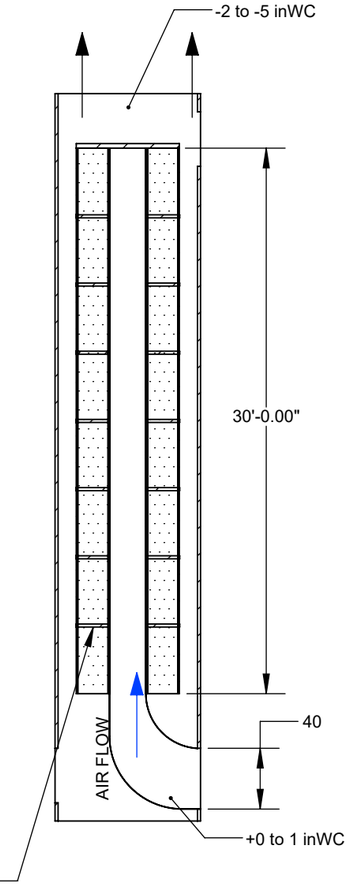

SECTION A-A

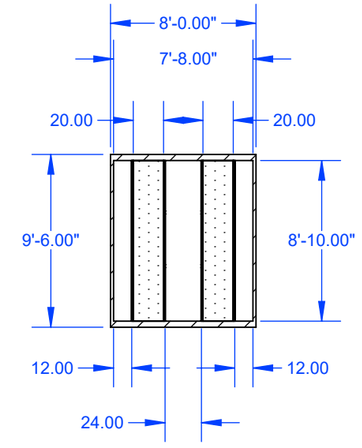

SECTION B-B

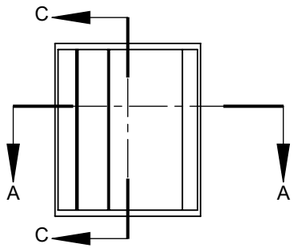

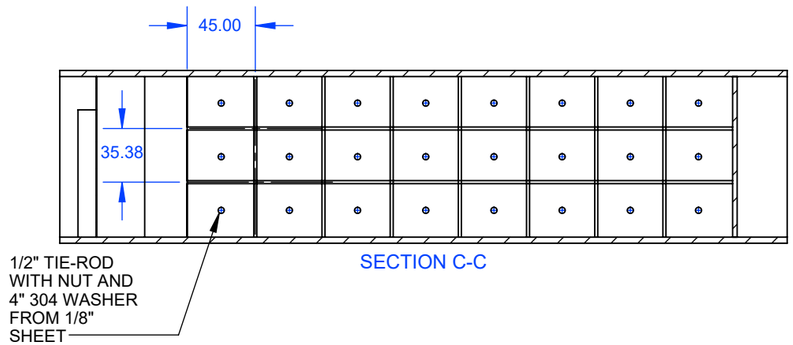

SECTION C-C

Notes:

Container Construction

1. Standard 40-foot long high-cube ISO shipping container will be modified for use as a carbon bed.
2. Container steel should be painted with an industrial epoxy coating. Use Sherwin-Williams Dura-Plate 235 epoxy or engineered approved equal. Follow product data sheets for recommended primer, application procedures, and build thickness.
3. Carbon cells shall be constructed of 304 SS.
4. Use standard perforated sheet pattern, 1/8-in holes on 3/16-in spacing with 40% open area. Brake edges to form panels and reinforce with vertical ribs. Standard face dimensions of 34 x 44.
5. Sidewall loading for high-cubes is the limiting load condition at 93 PSF or 17.9 inWC.
6. Limit internal pressure or vacuum to 9-inWC without additional reinforcement. A weighted vacuum relief should be installed if blower can exceed this pressure rating.
7. Design mandoors and fill hatches for this pressure requirement. Use walk-in cooler door lift-off strap hinges and roller latches.
8. End walls of container will be butted to other containers and drawn together with tie rods through the end tubing. Apply full width 3/8" closed-cell epdm foam with adhesive backing to one of the container end walls and allow to compress when the containers are drawn together.
9. Cell walls adjacent to the container walls are not accessible after assembly.

Activated Carbon

1. Use only 4mm pelletized carbon.
2. Each cell will hold 2 CY of carbon, for a total of 32 CY. Fill from top with supersack and top-off with additional if necessary to the bottom of the port nozzle.
3. Use vac truck to remove spent carbon. Use a cyclone separator on vac line to drop out carbon into bin or bag for disposal.
4. Interior screen panels could be removed if the carbon is caked. Use fan to supply fresh air when working in container, wear a half-mask respirator with appropriate dust filters, use a 4-gas meter to monitor for low O2 levels, and follow all standard work procedures to assure safety. Follow all OSHA rules.

Pressure monitoring

1. Provide indicating pressure monitoring (manometers) at the mandoor. One sensor should read the inlet side of the guard bed and a second dedicated pressure sensor for the discharge side. Sensor pitot tubes should be pointed into the normal airflow direction for static pressure readings.

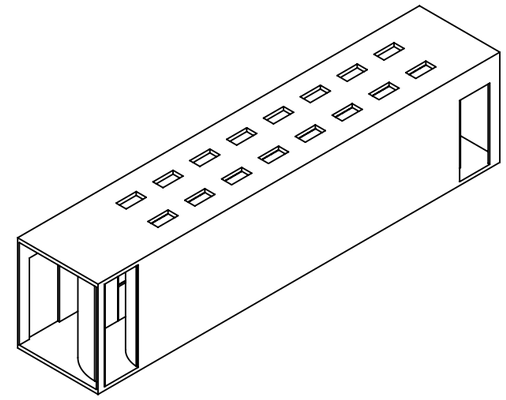

CONTAINER WEIGHT: 8,747 LBS
EST. CONTAINER WEIGHT WITHOUT CARBON: 23,747 LBS
EST. CONTAINER WEIGHT WITH CARBON: 55,747 LBS
MAX GROSS ALLOWABLE (FOR REF) 67,200 LBS

ECN	REV.	DESCRIPTION	DATE	APPROVED

REVISIONS

MATERIAL

SURFACE TREATMENT

EQUIPMENT LETTER

EQUIPMENT AREA

WEIGHT

3rd ANGLE PROJECTION

- NOTICE -
The drawing and information contained within this document are the sole property of GAE LLC and may not be copied or transferred without the written consent of GAE LLC. The recipient of this document must use the information provided exclusively for reasons beneficial and in no way detrimental to GAE LLC. The receiver shall return this document after the completion of its use or upon request, either written or verbal. Any violation of these terms may result in legal action submitted in a court of law. All rights reserved.

	DATE	NAME
DESIGNED	10/14/21	NMAST
CHECKED		

SCALE 1:100 | SHEET # 1 of 1

GREEN ARROW ENGINEERING
2759 Long Road Wooster, OH 44691

UNLESS OTHERWISE SPECIFIED
DIMENSIONS ARE IN INCHES
TOL. ON ANGLES ±1°
TOL. ON 1 PLACE DECIMALS ±0.25

DIMENSIONING & TOLERANCING IN ACCORDANCE WITH ASME Y14.5M-1994

CUSTOMER NAME

PROJECT NO.

TITLE

CARBON BED

FORMAT B

DRAWING NO. 21-350

MUA-950 W-030A/B, E-030A
MUA-951 W-030C/D, E-030B
Building make-up air units

18,000 CFM @ 1.5 inWC to 30,000 CFM @ 2.5 inWC

Variable Speed blower

Direct fire gas burner to 2.4 MMBTU/h input

REVISION LEVEL	DATE	DESCRIPTION	BY
0	10/17/21	INITIAL RELEASE	NMAST

Section 1 - Basic Equip. Data		
1.0	Tag No.	MUA-950: W-030A/B & E-030A; MUA-951: W-030C/D & E-030B
1.1	Pulls from	Outdoor air
1.2	Blows to	Process building, east wall, MUA-950 south half, MUA-951 north half
1.3	Installation	Outdoors
1.4	Burner	Direct fire gas heater. Burner capacity to 2.4 MMBTU/h

Section 2 – Fluid Properties – inlet prior to filter and burner								
2.0	Fluid Desc.	Fresh outdoor air						
2.1	TS%	N/A	2.2	RH range	50-100%	2.3	Temp. range	10 - 100° F
2.4	S.G.	1	2.5	Viscosity	0.0187 cP	2.6	Phase	Gas
2.7	Flammable		No					
2.8	Abrasives	Moisture may be present.						
2.9	Corrosives	none						
2.10	Notes	Include inlet air filter for dust						

Section 3 – System Requirements		
3.0	Flow Range	30,000 CFM @ 2.5 inWC, VFD control, each MUA
3.1	Duty	Continuous
3.2	Suction Conditions	Ducted
3.3	Static Pressure Range	(-) 1.0 inWC at suction inlet
3.4	Static Discharge P	1.5 inWC max (external)
3.6	Dynamic Losses from Inline Equipment	flow to unit through suction vents and 36-inch duct header. No inline filtration.
3.7	Dynamic Losses Duct and Fittings	Included in 3.6.
3.8	Expected max system pressure at req. flow	2.5 inWC
3.9	Detailed Head Loss Calculation Completed?	Yes.
3.10	Gas pressure requirement	0.5 – 5 PSIG
3.11	Temp. rise °F (EAT -2°F, LAT 66.5°F)	68F
3.12	Burner control panel	Remote panel, wall mounted inside bldg.

Section 4 - Air Handler and Blower Data					
4.0	Type	Plenum	4.1	Impeller Dia.	27-inch
4.2	Mfg.	Greenheck	4.3	Model No.	P227-H38-II
4.4	Drive	Direct drive			
4.5	Sheave Ratio	N/A	4.6	RPM @ 60 Hz	1770
4.7	Flow @ 60 Hz	30,000 CFM air @ 2.5 inWC			
4.8	Suction Flange	N/A	4.9	Discharge Flange	N/A

4.10	Total Weight	3868 lbs	4.11	base dim	See curb dwg. 148 x 92
4.12	Height	64”			
4.13	Notes:	Supplied and installed as part of the base building contract.			

Section 5 - Motor Data, each fan motor					
5.0	Motor HP	20	5.1	Frame	256T
5.2	RPM	1770	5.3	Voltage	3-ph 460 / FLA 40
5.4	SF	1.15	5.5	Duty	Continuous
5.6	Eff.	IE4	5.7	X-proof	Not required / installed outdoors
5.8	Encl.	ODP	5.9	Mfg.	Baldor is preferred

Section 6 – Flow Range				
CFM	**SP (inWC)**	**RPM**	**Hz**	**BHP**
18,000	1.5	1125	38	<20 HP
30,000	2.5	1732	60	<20 HP
Notes	Operators may choose to operate both at reduced flow volume at 18,000 CFM or only operate a single unit at 30,000 CFM. The make-up air needs to balance with the exhaust fans to maintain a negative building static pressure between -0.08 and -0.1 inWC. Openings OH doors when traffic is entering or exiting the building will affect the pressure. PID proportional gains should be set low if using direct pressure control to avoid fast ramp-up and ramp-down in response to static pressure changes.			

MUA-950 and MUA-951
each unit has twin 20 HP plenum blowers, VFD speed controlled
Direct fired gas heater, 2.4 MMBTU/h input.
Planned operation point when running together 18,000 CFM @ 1.5 inWC.
Independent operation to 30,000 CFM @ 2.5 inWC.
Primary control: building static pressure

Printed Date: 10/19/2021
Job: Green Era
Mark: MUA-950_951
Model: DGX-P227-H38-II

DGX-P227-H38-II

Unit Performance

Design Conditions

Elevation (ft)	Summer		Winter (°F)	Supply (CFM)	Outdoor Air (CFM)	Min Supply Airflow (CFM)
	DB (°F)	WB (°F)				
617	92.1	78.0	-1.6	30,000	30,000	10,500

Unit Specifications

Qty	Weight (lb)	Cooling Type	Heating Type	Unit Installation	Unit ETL Listing
2	3,868 (+/- 5%)	None	Direct Gas-Fired	Outdoor/Indoor	ANSI Z83.4 / CSA 3.7

Configuration

Unit Orientation	Unit Configuration	Outdoor Air Intake	Return Air Intake	Supply Air Discharge
Horizontal	Variable Volume	End	-	End

Heating Specifications

Type	Gas Type	Gas Pressure		Capacity (MBH)		Temperature Rise (°F)	Performance	
		Min (in. wg)	Max (Psi)	Input	Output		EAT (°F)	LAT (°F)
Direct Gas	Natural	14	5	2,400.0	2,208.0	68.2	-2.0	66.5

Air Performance

Type	Total Volume (CFM)	External SP (in. wg)	Total SP (in. wg)	RPM	Operating Power (hp)	Fan			
						Qty	Type	Size (in.)	Drive-Type
Supply	30,000	1.5	2.55	1732	13.62	2	Plenum	27	Direct-Drive

Motor Specifications

Motor	Qty	Size (HP)	Enclosure	Efficiency	RPM
Supply Fan Motor	2	20	ODP	NEMA Premium	1770

Electrical Specifications

Power Supply	Rating (V/C/P)	MCA (A)	MOP (A)
Unit	460/60/3	68.4	80

CONSTRUCTION FEATURES AND ACCESSORIES

Unit	
Unit Installation - Indoor or Outdoor	Std
Unit Construction - Double Wall	X
Wall Insulation - 1in. fiberglass - Entire unit	X
Base Insulation - 1in. fiberglass - entire unit base pan	Std
Paneled Bottom - Sheet metal liner for base insulation	
Corrosion Resistant Fasteners	Std
Access and Connections - Right side when facing intake	X
Service Access - Hinged access doors	X
Unit Finish - G90 Galvanized	X
Finish Color	
Supply Fan - Direct-drive, backward-curved plenum	X
Supply Fan and Motor Vibration isolation - Neoprene	X
Controls	
Unit Controls - Terminal strip	X
Remote Panel	
BMS Communication	
BMS Protocol	
Temperature Control - Discharge control	X
Supply Fan VFD - VFD by factory	X
Supply Fan Control - External 0-10 VDC signal	X
Unoccupied Mode (Night Setback)	
Control Accessories	
Remote display	
Heating Inlet Air Sensor	X
Cooling Inlet Air Sensor	
Dirty Filter Switch	X
Fire Stat Type III (Ships loose)	
120V/24V Smoke Detector (Ships loose)	
Inlet Damper End Switch	X
External Cooling Lockout Relay	
Freeze Protection (Supply Air Low Limit)	X
Auxiliary Supply Starter Contacts	
Auxiliary Exhaust Starter Contacts	
Airflow Proving Monitoring Contact	X

Accessories	
Factory Installed, Lockable, NEMA 3R Disconnect	Std
Weatherhood - Birdscreen	X
Supply Air Filters - 2" MERV 8, 16x25x2 - (30)	X
Outdoor Air Inlet Damper - Low leakage	X
Supply Air Outlet Damper	
Return Air Damper	
Diffuser	
Roof Curb	
Combination Curb	
Electrofin Coil Coating	
Fan Bearing Extended Lube Lines	
Inlet Damper Module	
Spare Belts	
Spare Filters	
Motor with Shaft Grounding	
Service Outlet	
Service Lights	
Gas Heating Accessories	
Pilot Ignition	Std
Flame Sensing - Flame rod	X
Flame Safeguard Display	
Agency Approval - ETL	Std
FM Compliant	X
High Gas Pressure Switch	X
Low Gas Pressure Switch	
Visual Indication Valves	
Proof of Closure Valve	
External Gas Pressure Regulator (Ships loose)	
Carbon Dioxide Sensor (Ships loose)	
Warranty Options	
Unit Warranty - 1 Year	X
5 Year Compressor Warranty	
5 Year Burner Warranty	
10 Year Burner Warranty	

Standard Option	Std
Not Included	
Included	X

Notes
Damper(s) supplied are low leakage, motorized VCD-23 (leakage rate of 3 CFM/ft^2 @ 1 in.wg), Class 1A

Fan Charts And Performance

Supply Fan Performance									
Total Volume (CFM)	External SP (in. wg)	Total SP (in. wg)	RPM	Operating Power (hp)	Motor		Fan		
					Qty	Size (HP)	Qty	Type	Drive-Type
30,000	1.5	2.55	1732	13.62	2	20	2	Plenum	Direct

Pressure Drop (in. wg)						
Weatherhood	Filter	Damper	Cooling	Heating	External	Total
0.103	0.179	0.143	-	0.625	1.5	2.55

Sound Performance in Accordance with AMCA										
Sound Power by Octave Band								Lwa	dBA	Sones
62.5	125	250	500	1000	2000	4000	8000			
91	94	100	104	100	94	88	84	105	94	70

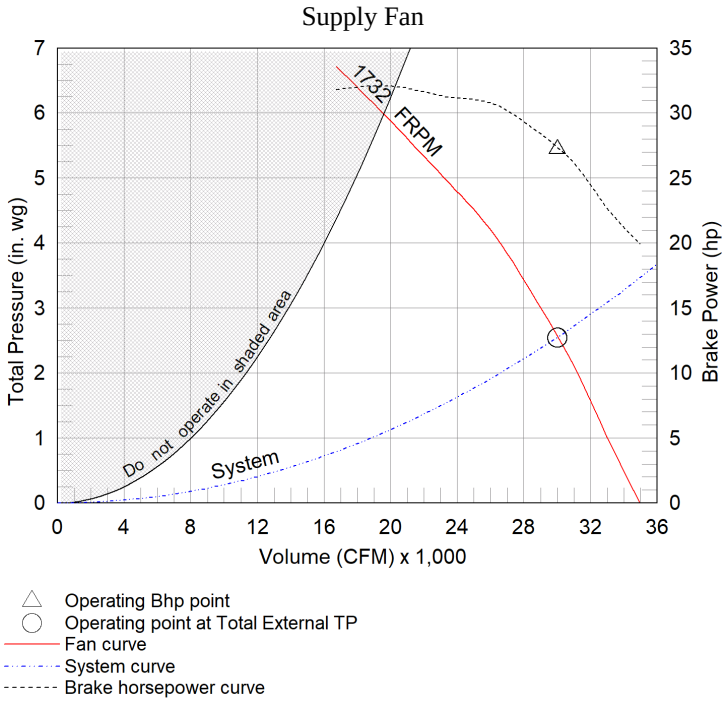

Heating Specifications

Heating Performance								
Type	Gas Type	Gas Pressure		Capacity (MBH)		Temperature Rise (°F)	Performance	
		Min (in. wg)	Max (Psi)	Input	Output		EAT (°F)	LAT (°F)
Direct Gas	Natural	14	5	2,400.0	2,208.0	68.2	-2.0	66.5

Gas Train Details							
Redundant Main Valves	Electronic Modulating Valve	Pilot Valve	Internal Regulator	Visual Indication Valve	Proof of Closure Valve	Gas Pressure Switch(es)	External Regulator
Std	Std	Std	Std	-	-	High	-

Additional Heating Information						
ETL Approved	FM Compliant	Temperature Control	Flame Sensing	Ignition Control	CO2 Sensor	Flame Safeguard Display
Std	Yes	Discharge	Flame Rod	Pilot	-	-

Unit Details
92% thermal efficiency
Cast aluminum burner manifold with stainless steel mixing plates
Electronic modulation burner control

10 second pre-purge sequence
Low fire start

Gas Connections

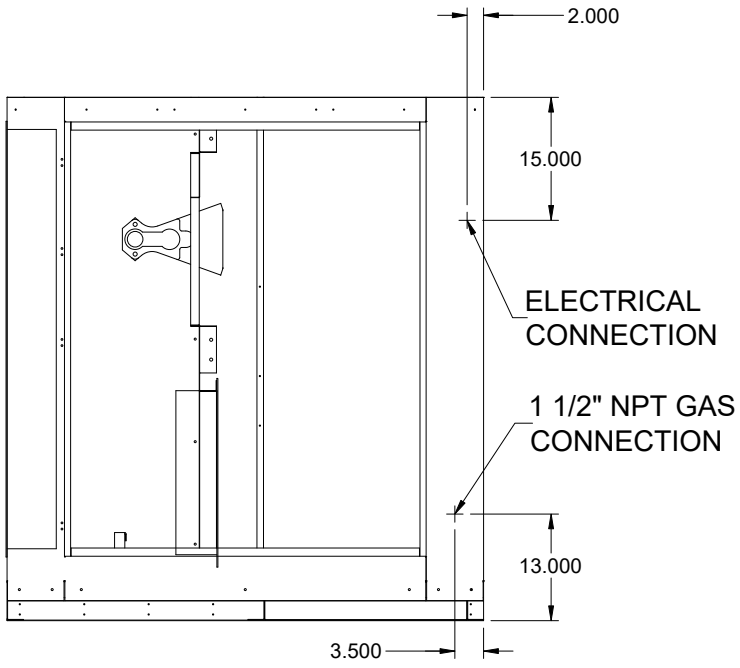

ELEVATION VIEW

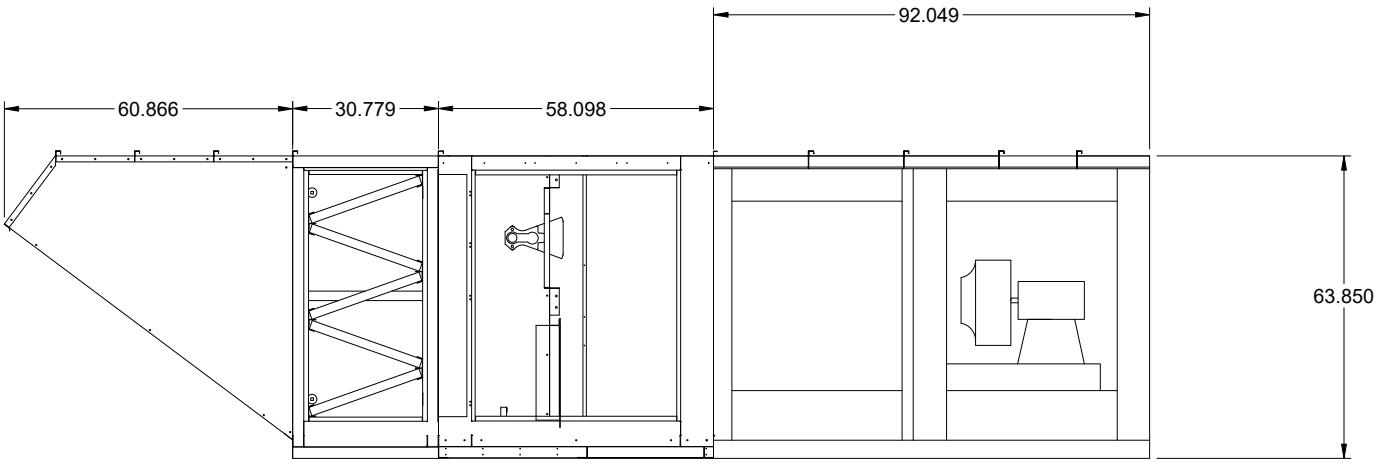

Notes - Elevation View
Standard configuration for unit access is on the right-hand side, when looking into the unit intake in the direction of airflow.
Order of unit sections is from intake of unit to discharge of unit.
Sections included on this unit: Weatherhood Section, Filter Section, Heating Section, Blower Section
Insulation: Double Wall, Entire Unit Insulated.

PLAN VIEW

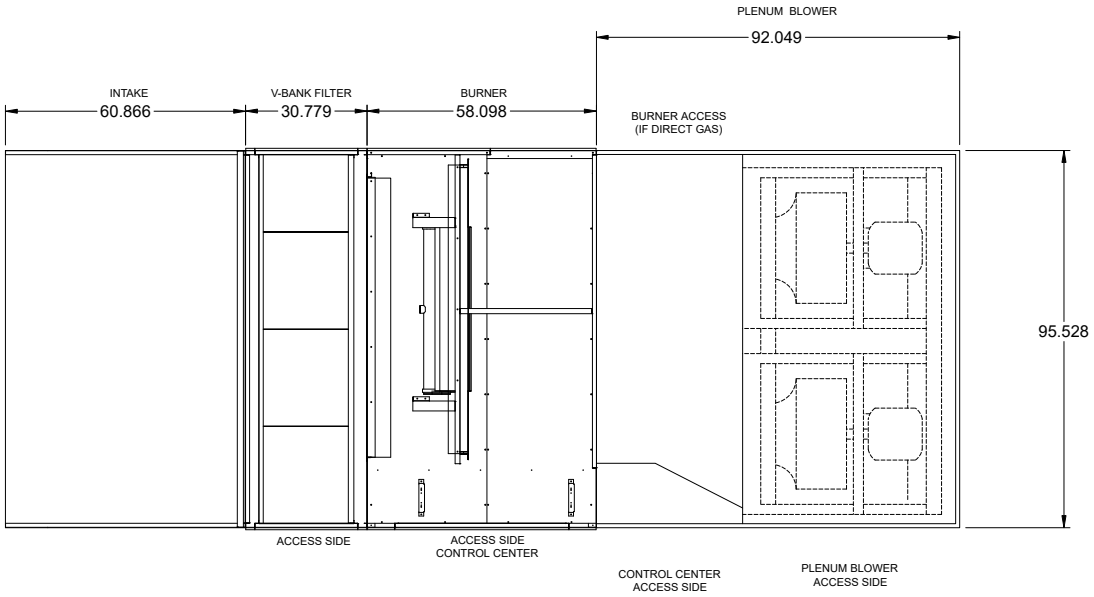

Notes - Plan View
Standard configuration for unit access is on the right-hand side, when looking into the unit intake in the direction of airflow.

END VIEW

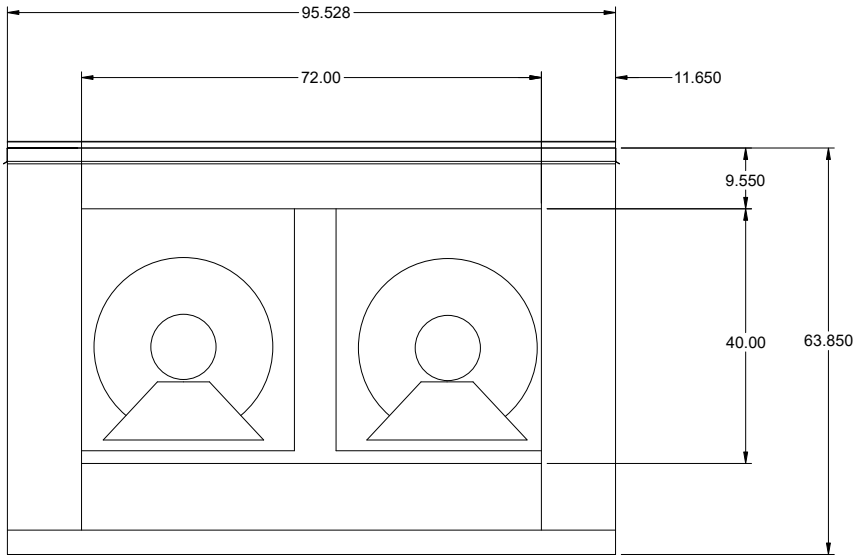

FOOTPRINT VIEW

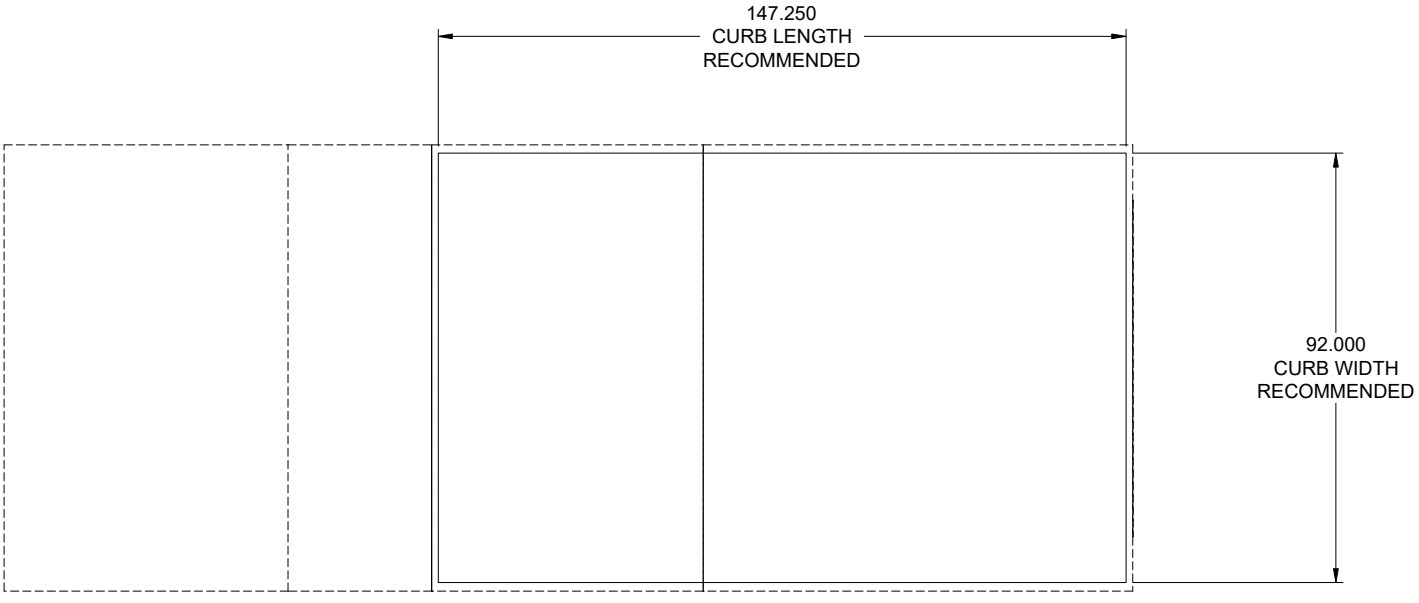

Notes - Footprint View
Minimum Roof Opening: The minimum roof opening size is the illustrated duct diameter plus 0.25 in. on all sides. For example: If the duct size is 14 x 14 in. square, the minimum roof opening size is 14.5 x 14.5 in. square.
Maximum Roof Opening: There must be a minimum perimeter of 1.75 in. between the roof opening and the roof curb. For example: If the roof curb is 75 x 30 in. square, the maximum roof opening is 71.5 x 26.5 in. inches square.
The weatherhood and filter sections of the make-up air unit extend beyond the curb. This is by design, to prevent water infiltration.

Clearance Specifications

Recommended Minimum Combustible Clearances				
	Floor (in.)	**Top (in.)**	**Sides (in.)**	**Ends (in.)**
Insulated Units	0	0	0	0
Non-Insulated Units	0	6	6	6

Notes - Combustible Clearances
Clearance to combustibles is defined as the minimum distance required between the heating source and the adjacent combustible surfaces to ensure the adjacent surface's temperature does not exceed 90 F above the ambient temperature.

Recommended Minimum Service Clearances	
Housing 32 and less (in.)	**Housing 35 and higher (in.)**
42 on the controls side of the unit	48 on the controls side of the unit

Notes - Service Clearances
To ensure ample space for component removal (evaporative cooling media, coils, filters, etc.), service clearances should be 6 in. wider than the width of the module itself.

Wiring Diagram

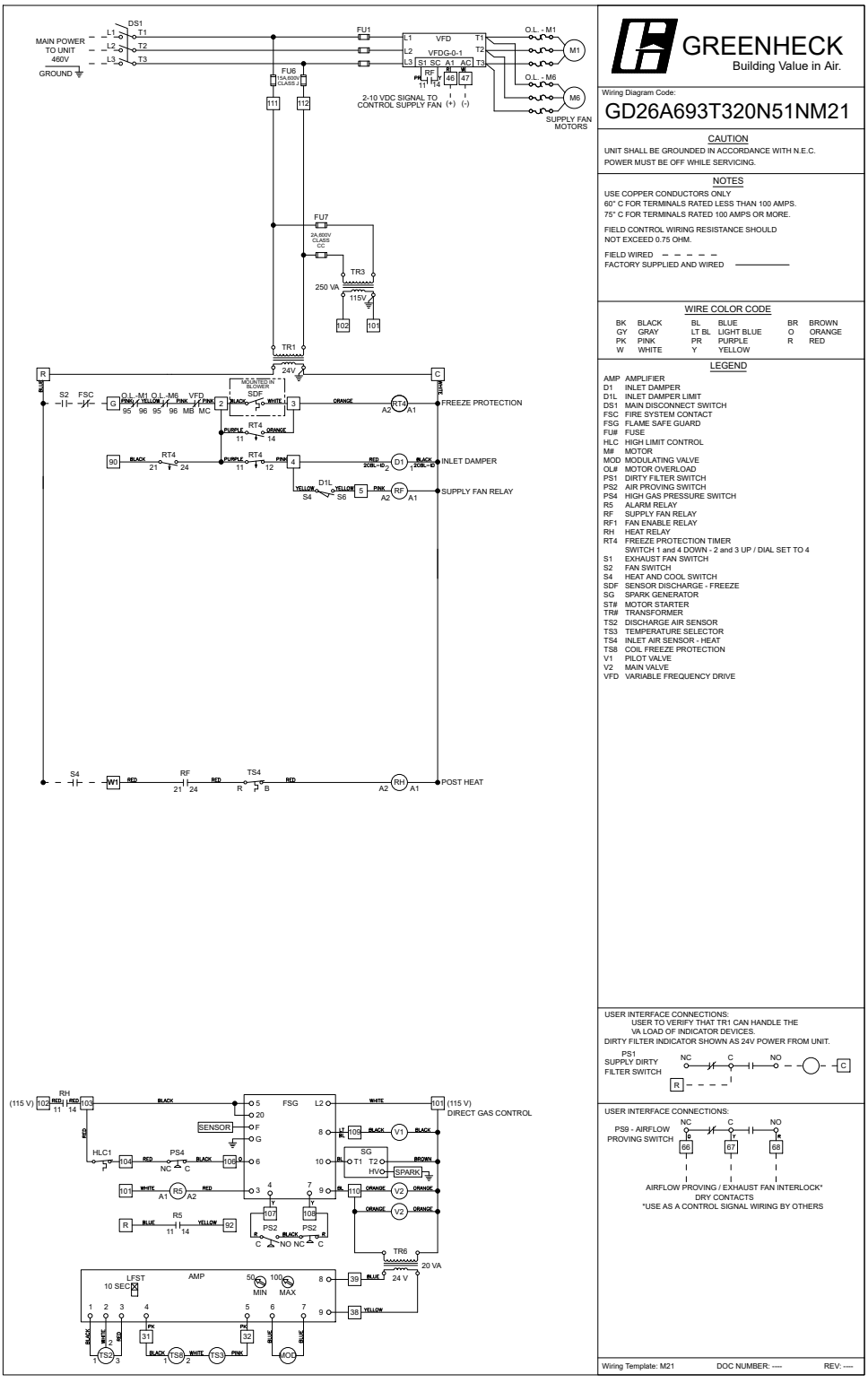

Manufacturer reserves the right to change, modify, or improve this product at anytime

Corner Weights

899 lb 917 lb

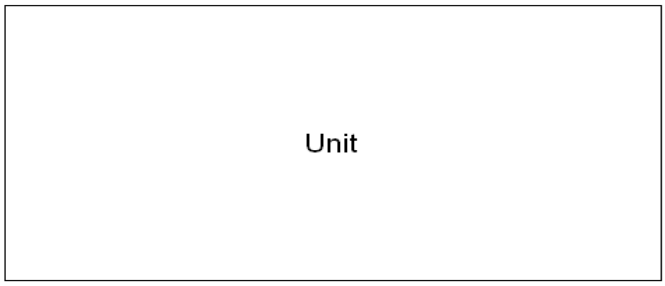

1,016 lb 1,036 lb

SEQUENCE OF OPERATIONS

Unit Controls
The unit shall be provided from the factory with:

- 24VAC Transformer
- Terminal Strip
- Supply fan VFD controlling dual supply fan motors and individual motor overloads
- Factory mounted and wired outdoor air inlet damper with actuator

Field Provided Control Requirements
The following field provided control signals must be provided for proper operation of the unit (Reference the unit wiring diagram for additional information):

- Supply fan enable – Contact closure between R and G (24VAC)
- Supply fan VFD speed signal – 0-10 VDC

Unit Start-Up Sequence

- Supply Fan Enable Is Received
- Outdoor air inlet damper actuator is energized
- Outdoor air inlet damper actuator limit switch is proven closed
- Supply Fan Is Enabled

Supply Fan Sequence
The unit has been provided with a factory mounted variable frequency drive (VFD). The variable frequency drive shall control the supply fan speed as indicated by the following sequence:

External 0-10 VDC Signal By Others:
The supply fan speed is modulated by an external 0-10 VDC signal (field provided and wired) landed to terminals in the unit control center (see unit wiring diagram for details).

Heating Control
A heating enable signal must be present and the supply fan must enabled before the unit will enable heating.

Heating Inlet Air Sensor (Heating Lockout)
The heating will be locked out when the outside air temperature is above the heating inlet air sensor set point (typical 65 F, adj.)

Direct Gas Fired Heating (Discharge Control)
The gas control amplifier located in the unit shall modulate the heating to maintain a supply temperature set point (55 F-90 F, adj.).

- The set point is adjusted in the unit control center.

Building Freeze Protection
If the supply air temperature drops below 35 F for 300s (adj.), the supply fan will be disabled. Cycling the fan enable will reset the timer. This sequence is intended to prevent the unit from supply cold air into the building.

Warranty Statement for Make-Up Air

Unit Warranty

Greenheck warrants the equipment to be free from defects in material and workmanship for a period of 1 year (standard) from the shipment date.

DG Burner Extended Warranty

The warranty does not include items deemed as consumable components, including, but not limited to: Igniters, Spark rods, Spark generator, Flame rods,Flame wires, UV eye components, and associated components.

Note: Rust, discoloration of the burner material and cracks or holes smaller than .75 in. is not qualification for a defective burner.

Warranty Notes

Any component which proves defective during the warranty period will be repaired or replaced at Greenheck's sole option when returned to our factory, transportation prepaid. All warranties do not include labor costs associated with troubleshooting, removal, or installation. Greenheck will not be liable for any consequential, punitive, or incidental damages resulting from use, repair, or operation of any Greenheck product. These warranties are exclusive and are in lieu of all other warranties, whether written, oral, or implied, including the warranty of merchantability and the warranty of fitness for a particular purpose. No person (including any agent or salesperson) has authority to expand Seller's obligation beyond the terms of this warranty, or to state that the performance of the product is other than that published by Seller.

As a result of our commitment to continuous improvement, Greenheck reserves the right to change specifications without notice.

DGX-P227-H38-II

Chart Type: RPMFamily

Fan:

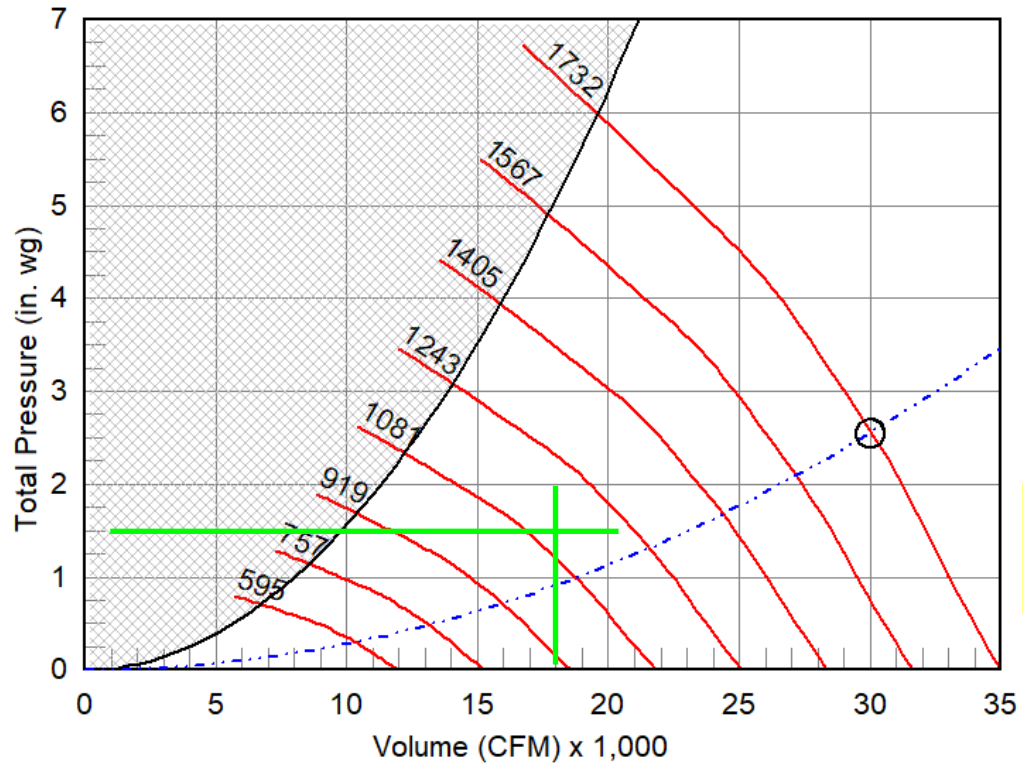

Operating speed for 18,000 CFM @ 1.5 inWC is about 1125 RPM

△ Operating Bhp point

○ Operating point at Total External TP

Fan curve

System curve

Brake horsepower curve

W-032 Ionization Circulation Fan

4,000 CFM @ 1.0 inWC with 1.5 HP motor

Tube axial, ceiling hung

REVISION LEVEL	DATE	DESCRIPTION	BY
0	10/17/21	INITIAL RELEASE	NMAST

Section 1 - Basic Equip. Data		
1.0	Tag No.	W-032A, W-032B
1.1	Pulls from	Indoor air
1.2	Blows to	Through MERV 8, 2-in pleated filter, to ionization duct
1.3	Installation	Suspend from overhead

Section 2 – Fluid Properties								
2.0	Fluid Desc.	Indoor odorous air, circulation unit						
2.1	TS%	N/A	2.2	RH range	50-80%	2.3	Temp. range	55 - 100° F
2.4	S.G.	1	2.5	Viscosity	0.0187 cP	2.6	Phase	Gas
2.7	Flammable		No					
2.8	Abrasives	Moisture may be present.						
2.9	Corrosives	None						
2.10	Notes							

Section 3 – System Requirements		
3.0	Flow Range	4,000 CFM @ 1 inWC
3.1	Duty	Continuous
3.2	Suction Conditions	Short ducted approach
3.3	Static Pressure Range	(-) 0 to (-) 0.1 inWC at suction inlet
3.4	Static Discharge P	0.9 inWC max
3.6	Dynamic Losses from Inline Equipment	Filter, MERV-8, 2-in pleat, expecting 0.25 inWC new to 1 inWC at changeout. Blower will produce 4800 CFM @ 0.25 inWC. Filter area 4’ x 3’. Use two 24” filters and two 24x12” filters in housing.
3.7	Dynamic Losses Duct and Fittings	Included in 3.6.
3.8	Expected max system pressure at req. flow	1.0 inWC
3.9	Detailed Head Loss Calculation Completed?	Yes

Section 4 - Blower Data					
4.0	Type	Vane axial direct drive	4.1	Impeller Dia.	24 inch nom.
4.2	Mfg.	Greenheck	4.3	Model No.	VAD-24H14-19-B15
4.4	Drive	Direct			
4.5	Sheave Ratio	N/A	4.6	RPM @ 60 Hz	1200 (1170)
4.7	Flow @ 60 Hz	4,000 CFM air @ 1.0 inWC			
4.8	Suction	24 in RD. duct	4.9	Discharge Flange	25.75” BC
4.10	Weight	367 lbs	4.11	Housing	32 lg x 24
4.12	Flange OD	27.75			
4.9	Notes:				

Section 5 - Motor Data					
5.0	Motor HP	1.5	5.1	Frame	182T
5.2	RPM	1200	5.3	Voltage	3-ph 460
5.4	SF	1.15	5.5	Duty	Continuous
5.6	Eff.	IE4	5.7	X-proof	Not required
5.8	Encl.	TEAO	5.9	Mfg.	Baldor is preferred

Section 6 – Flow Range				
CFM	**SP**	**RPM**	**Hz**	**BHP**
4,800	0.25 inWC	1170	60	<1 HP
4,000	1.0 inWC	1170	60	<1 HP
Notes	SP range from new filter to fouled filter			

Section 7 – Accessories				
line	**Description**	**P/N**	**Qty**	
10	Ionizer banks, 5-bulb units	KHF5-PE5	2	
20	Filter Area, 36x48, MERV 8, 2-in	24 x 24	2	
30	Filter Area, 36x48, MERV 8, 2-in	24 x 12	2	
Notes	Filter box access door should be installed in accessible location from a manlift.			

Basic Arrangement, inlet duct optional

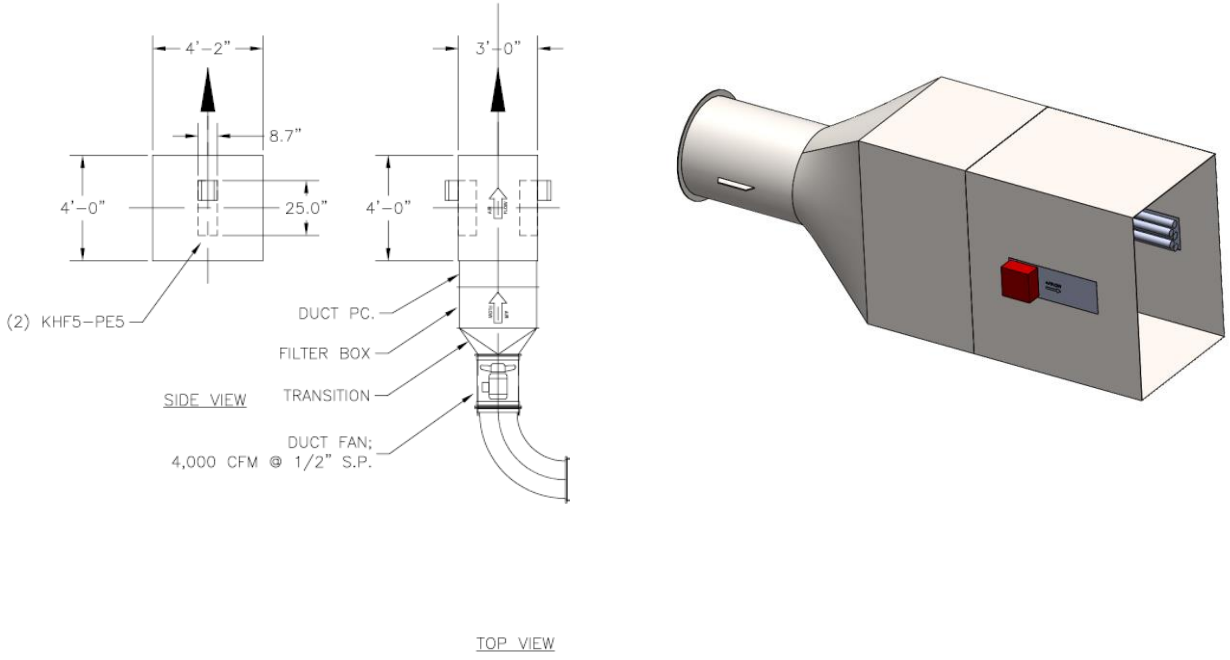

Performance	
Quantity	1
Volume (CFM)	4,018
Total External SP (in. wg)	1.009
Total TP (in. wg)	1.103
Operating Power (hp)	0.99
Required Power (hp)	0.99
Fan RPM	1170
Elevation (ft)	617
Start-up Temp.(F)	70
Operating Temp.(F)	70

Fan Configuration	
Size	24
Arrangement	4
Discharge Position	Horizontal
Mounting	Ceiling Hung
Material Type	Steel
Impeller Material	Aluminum

Equipment Weights	
Fan (LMD)(lb)	250
Motor/Drive (lb)	112
Accessories (lb)	5

Misc Fan Data	
FEG	75
Outlet Velocity (ft/min)	1,240
Static Efficiency (%)	64
Tip Speed (ft/min)	7,440
Thrust Weight (%)	5.1
Thrust Force (lb)	19

Motor and Drives	
Motor	Included
Size (hp)	1 1/2
RPM	1170
Enclosure	TEAO
V/C/P	460/60/3
Frame Size	182T
Max Frame Size	286

Model: VAD-24F17-24-B15
Vane Axial Direct Drive

Operating Performance

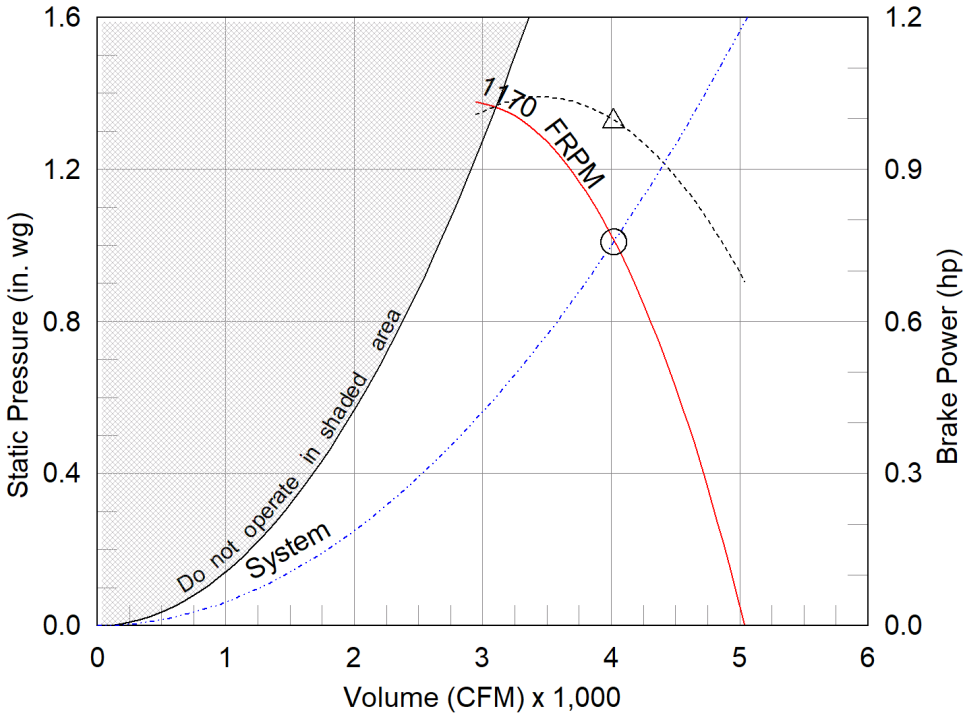

△ Operating Bhp point
◯ Operating point at Total External SP
Fan curve
System curve
Brake horsepower curve

Static Pressure Calculations	
External SP	1 in. wg
Direct Drive RPM Static Adj	0.009 in. wg
Total External SP	1.009 in. wg

Sound Power by Octave Band

Sound Data	62.5	125	250	500	1000	2000	4000	8000	LwA	dBA
Inlet	75	78	82	81	77	72	68	65	82	71

LwA - A weighted sound power level, based on ANSI S1.4
dBA - A weighted sound pressure level, based on 11.5 dB attenuation per octave band at 5 ft- dBA levels are not licensed by AMCA International

Model: VAD-24F17-24-B15

Vane Axial Direct Drive

Standard Construction Features:

HOUSING: Continuously welded steel housing - Welded steel straightening vanes - Inlet and outlet flanges with mounting holes - Electrical leads to external mounted junction box - Structural parts are phosphatized and coated with Permatector.

WHEEL: Aircraft quality, heat treated A356-T6 cast aluminum rotor hub and blades - Manually adjustable blade pitch.

Selected Options & Accessories:

NEMA Premium Efficient Motor - meets NEMA Table 12-12
Motor with Class F or Greater Insulation
Extended Motor Leads
Coating - Permatector, Concrete Gray-RAL 7023, Fan and Attached Accessories
Mounting Brackets - Ceiling Hung
UL/cUL-705 - "Power Ventilators"
Housing is sealed for outdoor use
Unit Warranty: 1 Yr (Standard)

Model: VAD-24F17-24-B15 Vane Axial Direct Drive

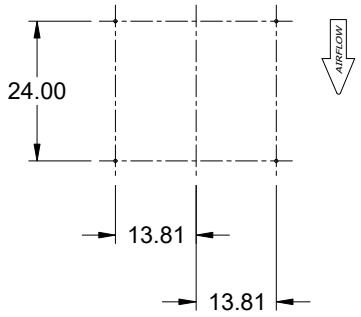

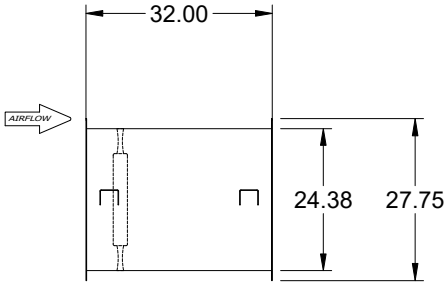

SIDE VIEW

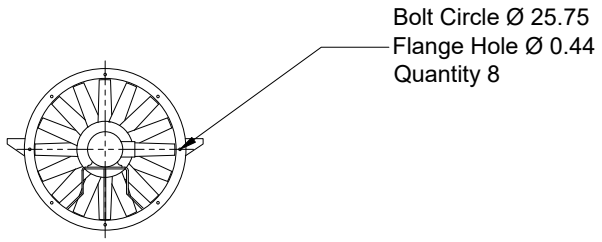

END VIEW

0.56 DIA. MOUNTING HOLES
END VIEW SHOWS FROM OUTLET END OF UNIT
UNIT IS NOT FIELD ROTATABLE

Notes: All dimensions shown are in units of in.

AMCA

AMCA Licensed for Air Performance. Power rating (BHP/kW) does not include transmission losses.

Greenheck Fan Corporation certifies that the model shown herein is licensed to bear the AMCA Seal. The ratings shown are based on tests and procedures performed in accordance with AMCA Publication 211 and comply with the requirements of the AMCA Certified Ratings Program. Performance certified is for installation type D - ducted inlet, ducted outlet. Performance ratings do not include the effects of appurtenances (accessories) in the airstream. Power ratings (BHP/kW) do not include transmission losses.

W-032 Ionization Circulation Twin Fan Unit

8,000 CFM @ 1.0 inWC

Tube axial, ceiling hung

REVISION LEVEL	DATE	DESCRIPTION	BY
0	10/17/21	INITIAL RELEASE	NMAST

Section 1 - Basic Equip. Data		
1.0	Tag No.	W-032C/D, W-032E/F
1.1	Pulls from	Indoor air
1.2	Blows to	Through MERV 8, 2-in pleated filter, to ionization duct
1.3	Installation	Suspend from overhead

Section 2 – Fluid Properties								
2.0	Fluid Desc.	Indoor odorous air, circulation unit						
2.1	TS%	N/A	2.2	RH range	50-80%	2.3	Temp. range	55 - 100° F
2.4	S.G.	1	2.5	Viscosity	0.0187 cP	2.6	Phase	Gas
2.7	Flammable		No					
2.8	Abrasives	Moisture may be present.						
2.9	Corrosives	None						
2.10	Notes							

Section 3 – System Requirements		
3.0	Flow Range	4,000 CFM @ 1 inWC per fan - 8,000 CFM total
3.1	Duty	Continuous
3.2	Suction Conditions	Short ducted approach
3.3	Static Pressure Range	(-) 0 to (-) 0.1 inWC at suction inlet
3.4	Static Discharge P	0.9 inWC max
3.6	Dynamic Losses from Inline Equipment	Filter, MERV-8, 2-in pleat, expecting 0.25 inWC new to 1 inWC at changeout. Blower will produce 4800 CFM @ 0.25 inWC. Filter area 4’ x 3’. Use two 24” filters and two 24x12” filters in housing.
3.7	Dynamic Losses Duct and Fittings	Included in 3.6.
3.8	Expected max system pressure at req. flow	1.0 inWC
3.9	Detailed Head Loss Calculation Completed?	Yes

Section 4 - Blower Data					
4.0	Type	Vane axial direct drive	4.1	Impeller Dia.	24 inch nom.
4.2	Mfg.	Greenheck	4.3	Model No.	VAD-24H14-19-B15
4.4	Drive	Direct			
4.5	Sheave Ratio	N/A	4.6	RPM @ 60 Hz	1200 (1170)
4.7	Flow @ 60 Hz	4,000 CFM air @ 1.0 inWC			
4.8	Suction	24 in RD. duct	4.9	Discharge Flange	25.75” BC
4.10	Weight	367 lbs	4.11	Housing	32 lg x 24
4.12	Flange OD	27.75			
4.9	Notes:				

Section 5 - Motor Data					
5.0	Motor HP	1.5	5.1	Frame	182T
5.2	RPM	1200	5.3	Voltage	3-ph 460
5.4	SF	1.15	5.5	Duty	Continuous
5.6	Eff.	IE4	5.7	X-proof	Not required
5.8	Encl.	TEAO	5.9	Mfg.	Baldor is preferred

Section 6 – Flow Range				
CFM	**SP**	**RPM**	**Hz**	**BHP**
4,800	0.25 inWC	1170	60	<1 HP
4,000	1.0 inWC	1170	60	<1 HP
Notes	SP range from new filter to fouled filter			

Section 7 – Accessories				
line	**Description**	**P/N**	**Qty**	
10	Ionizer banks, 5-bulb units	KHF5-PE5	4	
20	Filter Area, 36x48, MERV 8, 2-in	24 x 24	4	
30	Filter Area, 36x48, MERV 8, 2-in	24 x 12	4	
Notes	Filter box access door should be installed in accessible location from a manlift.			

Basic Arrangement

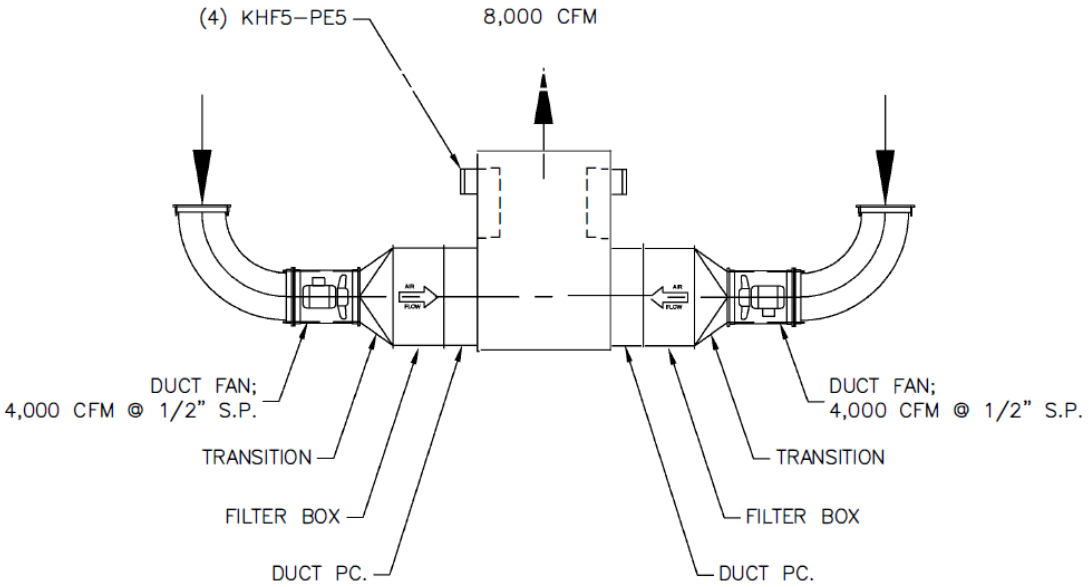

TOP VIEW

Discharge duct/union with 4 ionizer units

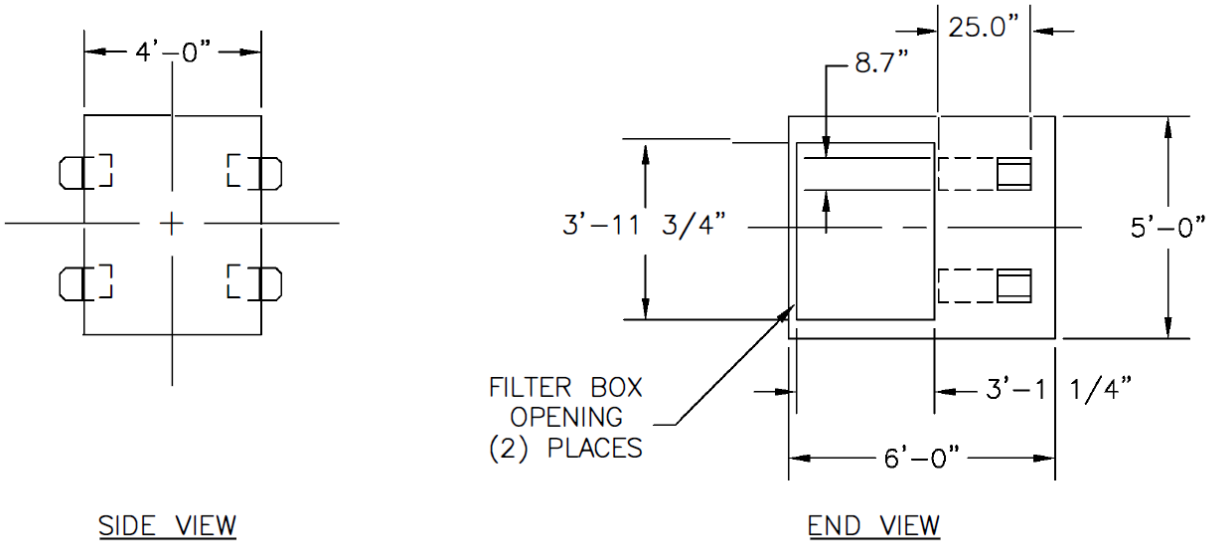

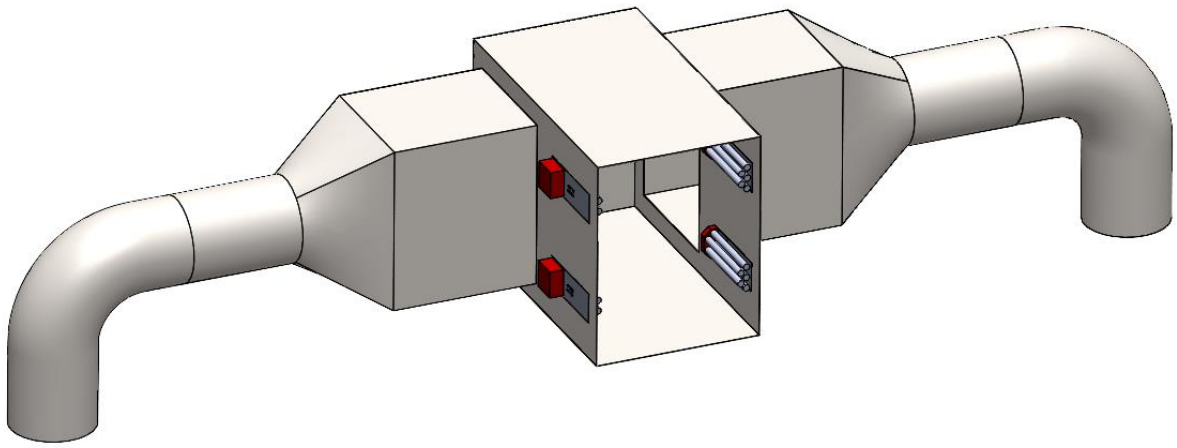

Performance	
Quantity	1
Volume (CFM)	4,018
Total External SP (in. wg)	1.009
Total TP (in. wg)	1.103
Operating Power (hp)	0.99
Required Power (hp)	0.99
Fan RPM	1170
Elevation (ft)	617
Start-up Temp.(F)	70
Operating Temp.(F)	70

Fan Configuration	
Size	24
Arrangement	4
Discharge Position	Horizontal
Mounting	Ceiling Hung
Material Type	Steel
Impeller Material	Aluminum

Equipment Weights	
Fan (LMD)(lb)	250
Motor/Drive (lb)	112
Accessories (lb)	5

Misc Fan Data	
FEG	75
Outlet Velocity (ft/min)	1,240
Static Efficiency (%)	64
Tip Speed (ft/min)	7,440
Thrust Weight (%)	5.1
Thrust Force (lb)	19

Motor and Drives	
Motor	Included
Size (hp)	1 1/2
RPM	1170
Enclosure	TEAO
V/C/P	460/60/3
Frame Size	182T
Max Frame Size	286

Model: VAD-24F17-24-B15
Vane Axial Direct Drive

Operating Performance

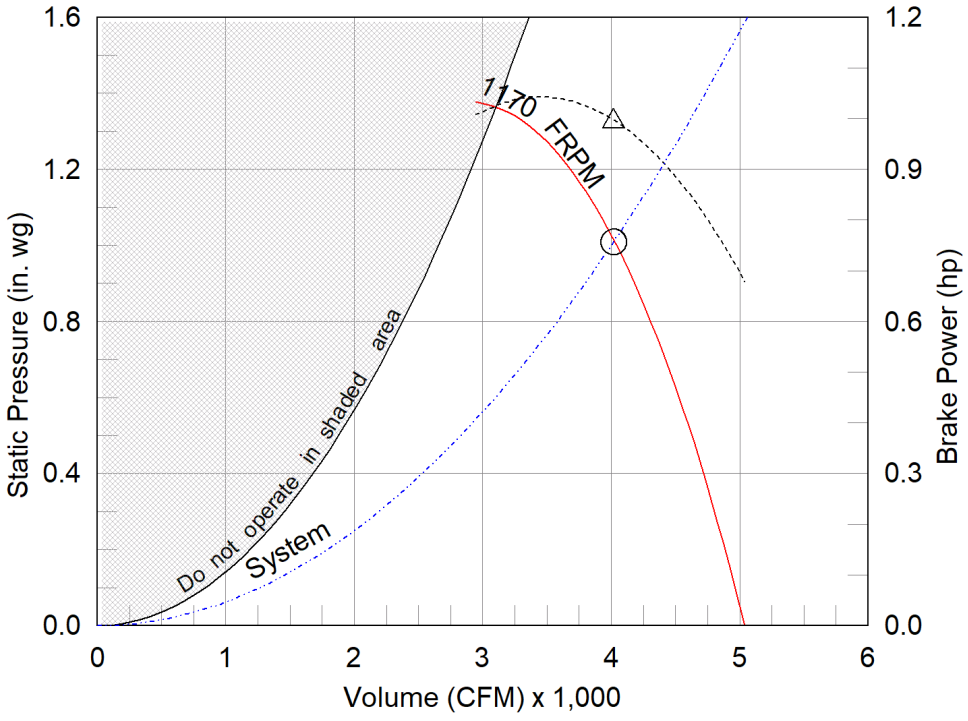

△ Operating Bhp point
◯ Operating point at Total External SP
Fan curve
System curve
Brake horsepower curve

Static Pressure Calculations	
External SP	1 in. wg
Direct Drive RPM Static Adj	0.009 in. wg
Total External SP	1.009 in. wg

Sound Power by Octave Band

Sound Data	62.5	125	250	500	1000	2000	4000	8000	LwA	dBA
Inlet	75	78	82	81	77	72	68	65	82	71

LwA - A weighted sound power level, based on ANSI S1.4
dBA - A weighted sound pressure level, based on 11.5 dB attenuation per octave band at 5 ft- dBA levels are not licensed by AMCA International

Model: VAD-24F17-24-B15

Vane Axial Direct Drive

Standard Construction Features:

HOUSING: Continuously welded steel housing - Welded steel straightening vanes - Inlet and outlet flanges with mounting holes - Electrical leads to external mounted junction box - Structural parts are phosphatized and coated with Permatector.

WHEEL: Aircraft quality, heat treated A356-T6 cast aluminum rotor hub and blades - Manually adjustable blade pitch.

Selected Options & Accessories:

NEMA Premium Efficient Motor - meets NEMA Table 12-12
Motor with Class F or Greater Insulation
Extended Motor Leads
Coating - Permatector, Concrete Gray-RAL 7023, Fan and Attached Accessories
Mounting Brackets - Ceiling Hung
UL/cUL-705 - "Power Ventilators"
Housing is sealed for outdoor use
Unit Warranty: 1 Yr (Standard)

Model: VAD-24F17-24-B15 Vane Axial Direct Drive

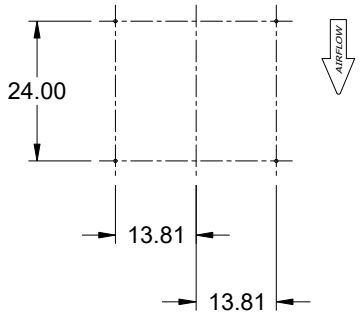

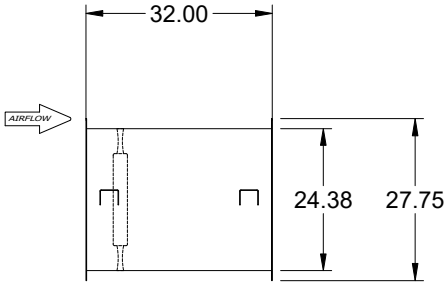

SIDE VIEW

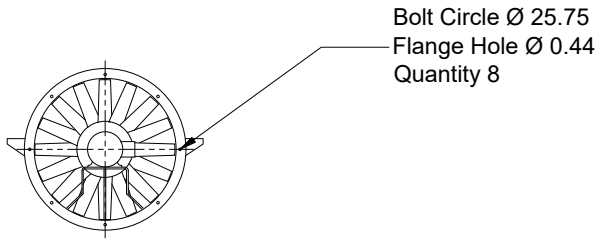

END VIEW

0.56 DIA. MOUNTING HOLES
END VIEW SHOWS FROM OUTLET END OF UNIT
UNIT IS NOT FIELD ROTATABLE

Notes: All dimensions shown are in units of in.

AMCA

AMCA Licensed for Air Performance. Power rating (BHP/kW) does not include transmission losses.

Greenheck Fan Corporation certifies that the model shown herein is licensed to bear the AMCA Seal. The ratings shown are based on tests and procedures performed in accordance with AMCA Publication 211 and comply with the requirements of the AMCA Certified Ratings Program. Performance certified is for installation type D - ducted inlet, ducted outlet. Performance ratings do not include the effects of appurtenances (accessories) in the airstream. Power ratings (BHP/kW) do not include transmission losses.

W-034A (EF-952) Building Exhaust Fan

Dewatering Area

19,000 CFM @ 2.5 inWC to 26,400 CFM @ 3.5 inWC

Variable Speed blower

REVISION LEVEL	DATE	DESCRIPTION	BY
0	10/17/21	INITIAL RELEASE	NMAST

Section 1 - Basic Equip. Data		
1.0	Tag No.	W-034A
1.1	Pulls from	Building, dewatering area
1.2	Blows to	Ionization reactor U-038 ahead of carbon guard bed
1.3	Installation	Outdoors

Section 2 – Fluid Properties								
2.0	Fluid Desc.	Odorous air from building, 19,000 CFM						
2.1	TS%	N/A	2.2	pH range	N/A	2.3	Temp. range	55 - 100° F
2.4	S.G.	1	2.5	Viscosity	0.0187 cP	2.6	Phase	Gas
2.7	Flammable		No					
2.8	Abrasives	Dust and moisture will be present.						
2.9	Corrosives	H2S < 5 PPMV, NH4 < 10 PPMV, water vapor						
2.10	Notes	Combines with flow from W-034B EF-953, also to operate @ 19,000 CFM						

Section 3 – System Requirements		
3.0	Flow Range	19,000 CFM @ 2.5 inWC, VFD control
3.1	Duty	Continuous
3.2	Suction Conditions	Ducted
3.3	Static Pressure Range	(-) 1.5 inWC at suction inlet
3.4	Static Discharge P	1 inWC max
3.6	Dynamic Losses from Inline Equipment	flow to unit through suction vents and 36-inch duct header. No inline filtration.
3.7	Dynamic Losses Duct and Fittings	Included in 3.6.
3.8	Expected max system pressure at req. flow	2.5 inWC
3.9	Detailed Head Loss Calculation Completed?	Yes.

Section 4 - Blower Data					
4.0	Type	Vane axial, belt drive	4.1	Impeller Dia.	36-in
4.2	Mfg.	Greenheck	4.3	Model No.	VAB-36F14-II-300
4.4	Drive	Belt			
4.5	Sheave Ratio	~1.06	4.6	RPM @ 60 Hz	1832
4.7	Flow @ 60 Hz	26,400 CFM air @ 3.5 inWC			
4.8	Suction Flange	36 in RD. see dim. page	4.9	Discharge Flange	36 in round
4.10	Weight	1350 lbs	4.11	base dim	40 x 35
4.12	Height	67” max with motor			

4.9	Notes:	Supplied and installed as part of the base building contract.

Section 5 - Motor Data					
5.0	Motor HP	30	5.1	Frame	286T
5.2	RPM	1800	5.3	Voltage	3-ph 460 / FLA 40
5.4	SF	1.15	5.5	Duty	Continuous
5.6	Eff.	IE4	5.7	X-proof	Not required / installed outdoors
5.8	Encl.	TEFC	5.9	Mfg.	Baldor is preferred

Section 6 – Flow Range				
CFM	**SP (inWC)**	**RPM**	**Hz**	**BHP**
19,000	2.5	1450	47	<30 HP
26,400	3.5	1832	60	<30 HP
Notes	Blower will normally operate together with W-034B, with both producing 19,000 CFM. It may also operate on its own up to 26,400 CFM.			

Performance	
Quantity	1
Volume (CFM)	26,400
Total External SP (in. wg)	3.5
Total TP (in. wg)	4.315
Operating Power (hp)	25.73
Required Power (hp)	25.73
Fan RPM	1832
Max Fan RPM	2,165
Elevation (ft)	617
Start-up Temp.(F)	70
Operating Temp.(F)	70

Fan Configuration	
Size	36
Class	II
Arrangement	9
Discharge Position	Horizontal
Mounting	Base Mount
Material Type	Steel
Impeller Material	Aluminum

Equipment Weights	
Fan (LMD)(lb)	800
Motor/Drive (lb)	472
Accessories (lb)	71

Misc Fan Data	
FEG	75
Outlet Velocity (ft/min)	3,658
Static Efficiency (%)	58
Tip Speed (ft/min)	17,390
Thrust Weight (%)	12.1
Thrust Force (lb)	162

Motor and Drives	
Motor	Included
Size (hp)	30
RPM	1725
Enclosure	TEFC
V/C/P	460/60/3
Frame Size	286T
Max Frame Size	326
Location	A
Pulley Type	Constant
Drive Loss (%)	3.3
Drives	Standard
Drive Service Factor	1.5
NEC FLA* (Amps)	40

Model: VAB-36F14-II-300

Vane Axial Belt Drive

Tags: EF-952

Operating Performance

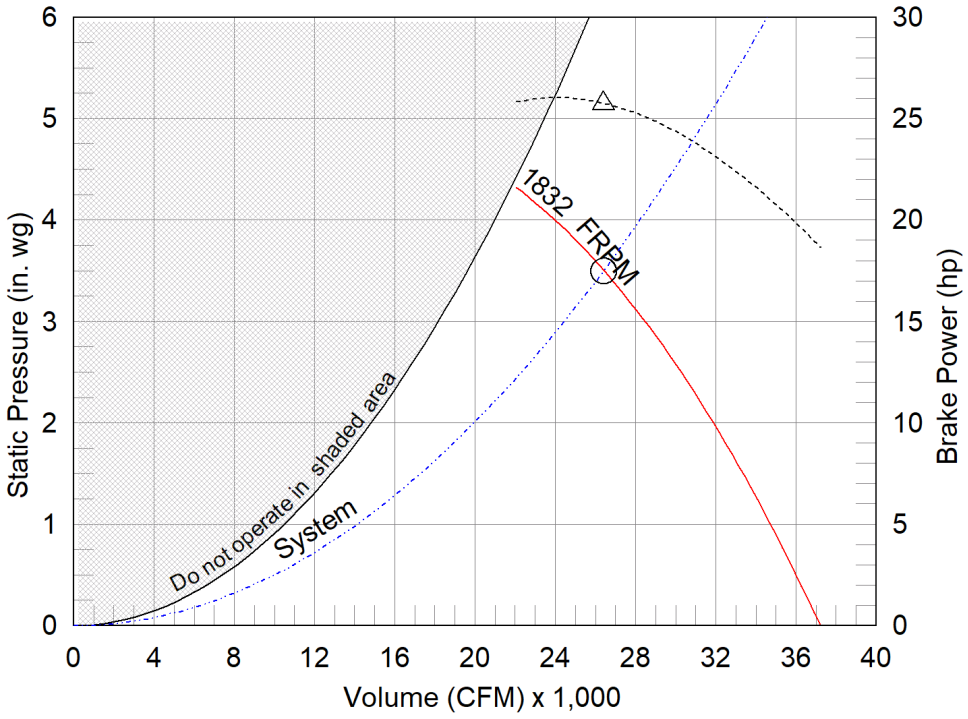

△ Operating Bhp point
◯ Operating point at Total External SP
Fan curve
System curve
Brake horsepower curve

Sound Power by Octave Band

Sound Data	62.5	125	250	500	1000	2000	4000	8000	LwA	dBA
Inlet	93	98	105	101	101	99	94	87	106	95

*FLA - based on tables 150 or 148 of National Electrical Code 2002. Actual motor FLA may vary, for sizing thermal overload, consult factory.
LwA - A weighted sound power level, based on ANSI S1.4
dBA - A weighted sound pressure level, based on 11.5 dB attenuation per octave band at 5 ft- dBA levels are not licensed by AMCA International

Model: VAB-36F14-II-300

Vane Axial Belt Drive

Standard Construction Features:

HOUSING: Continuously welded steel housing - Welded steel straightening vanes - Inlet and outlet flanges with mounting holes - Heavy gauge steel motor supports with adjustment screws for belt tensioning - Structural parts are phosphatized and coated with Permatector.

BEARINGS, SHAFT, AND WHEEL: Heavy duty, self-aligning ball or roller pillow block bearings with extended lubrication lines - Precision-ground, polished, solid steel shafts - Aircraft quality, heat treated A356-T6 cast aluminum rotor hub and blades.

Selected Options & Accessories:

NEMA Premium Efficient Motor - meets NEMA Table 12-12
Motor VFD Rated without Shaft Grounding Protection
Motor with Class B or Greater Insulation
Standard Drives
Coating - Permatector, Concrete Gray-RAL 7023, Fan and Attached Accessories
Mounting Brackets - Base Mount
UL/cUL-705 - "Power Ventilators"
Belt Guard
Thrust Restraints
Housing is not sealed for outdoor use
Unit Warranty: 1 Yr (Standard)

Model: VAB-36F14-II-300 Vane Axial Belt Drive

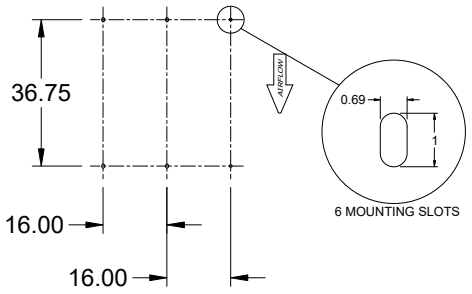

FOOTPRINT VIEW

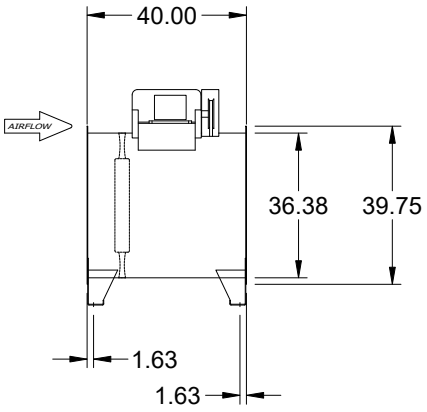

SIDE VIEW

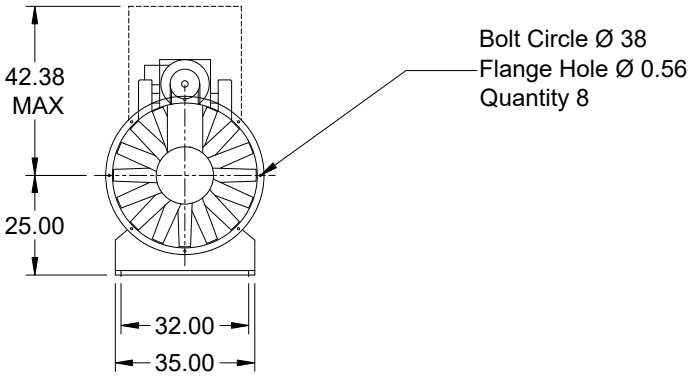

END VIEW

END VIEW SHOWS FROM OUTLET END OF UNIT
UNIT IS NOT FIELD ROTATABLE

Notes: All dimensions shown are in units of in.

VAB-36F14-II-300

Mark: EF-952 Belt Press Area

Chart Type: RPM Family

Requested Volume (CFM)	26,400	Actual Volume (CFM)	26,400	Total External SP (in. wg)	3.5
Elevation (ft)	617	Airstream Temp. (F)	70	Operating Power (hp)	25.73
Drive Loss (%)	3.3	Fan RPM	1832	Static Efficiency (%)	58

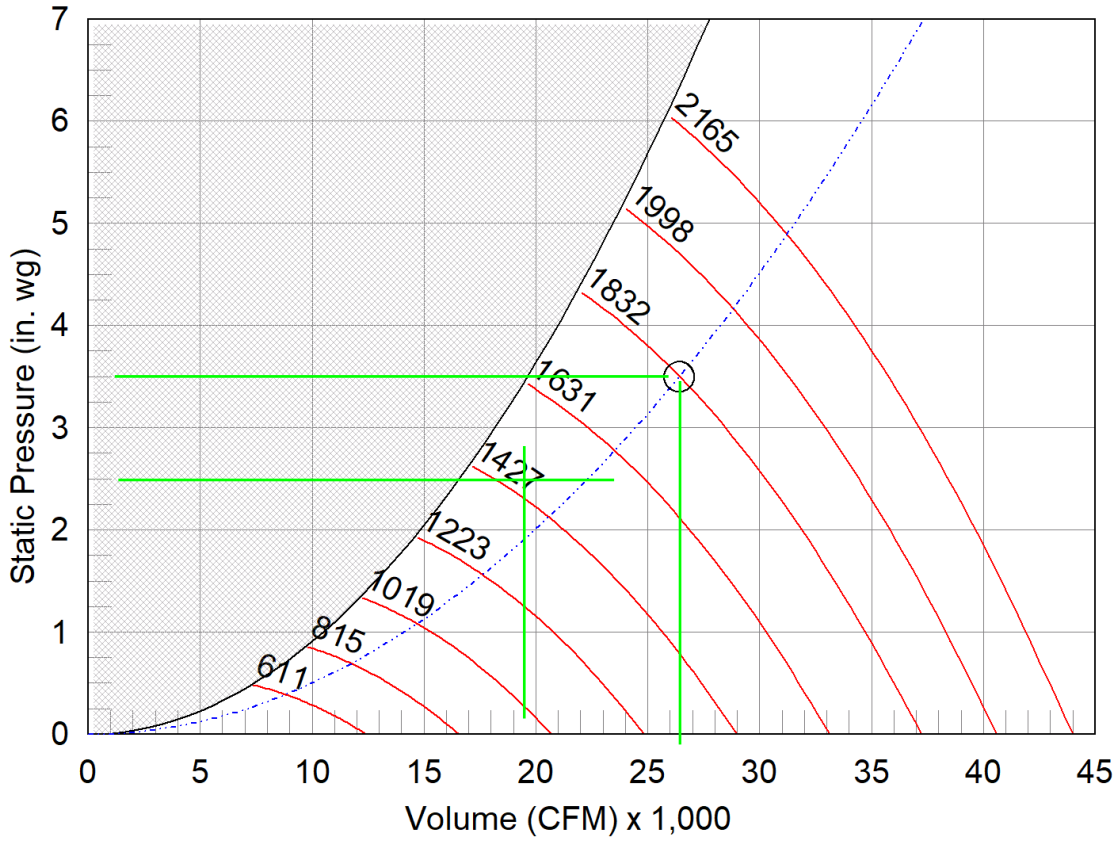

Operating Bhp point
Operating point at Total External SP
Fan curve
System curve
Brake horsepower curve

Sound Power by Octave Band

Sound Data	62.5	125	250	500	1000	2000	4000	8000	LwA	dBA	Sones
Inlet	93	98	105	101	101	99	94	87	106	95	84

LwA - A weighted sound power level, based on ANSI S1.4
dBA - A weighted sound pressure level, based on 11.5 dB attenuation per Octave band at 5 ft. dBA levels are not licensed by AMCA International
Sones - calculated using AMCA 301 at 5 ft

VAB-36F14-I-150

Mark: EF-952 Belt Press Area

Chart Type: RPM Family

Requested Volume (CFM)	19,000	Actual Volume (CFM)	19,000	Total External SP (in. wg)	2.5
Elevation (ft)	617	Airstream Temp. (F)	70	Operating Power (hp)	12.92
Drive Loss (%)	3.5	Fan RPM	1450	Static Efficiency (%)	60

plotted with 19,000 CFM @ 2.5 as the operating point.

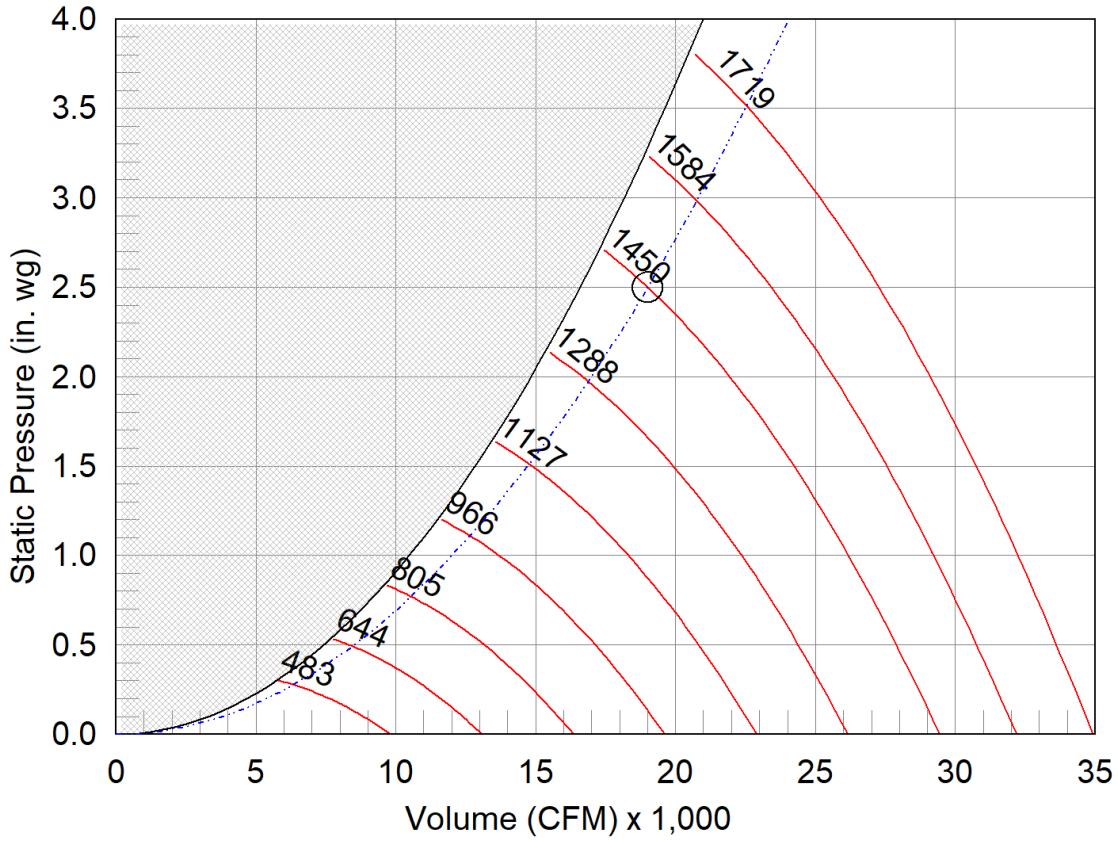

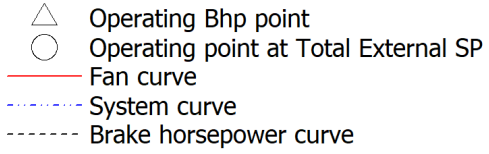

Sound Power by Octave Band

Sound Data	62.5	125	250	500	1000	2000	4000	8000	LwA	dBA	Sones
Inlet	90	96	99	97	96	92	87	80	100	88	54

LwA - A weighted sound power level, based on ANSI S1.4
dBA - A weighted sound pressure level, based on 11.5 dB attenuation per Octave band at 5 ft. dBA levels are not licensed by AMCA International
Sones - calculated using AMCA 301 at 5 ft

W-034B (EF-953) Building Exhaust Fan

Feedstock Processing Area

19,000 CFM @ 2.5 inWC to 33,600 CFM @ 3.9 inWC

Variable Speed blower

REVISION LEVEL	DATE	DESCRIPTION	BY
0	10/17/21	INITIAL RELEASE	NMAST

Section 1 - Basic Equip. Data		
1.0	Tag No.	W-034B, EF-953 on building plans
1.1	Pulls from	Building, feedstock processing area
1.2	Blows to	Ionization reactor U-038 ahead of carbon guard bed
1.3	Installation	Outdoors

Section 2 – Fluid Properties								
2.0	Fluid Desc.	Odorous air from building, 19,000 CFM						
2.1	TS%	N/A	2.2	pH range	N/A	2.3	Temp. range	55 - 100° F
2.4	S.G.	1	2.5	Viscosity	0.0187 cP	2.6	Phase	Gas
2.7	Flammable		No					
2.8	Abrasives	Dust and moisture will be present.						
2.9	Corrosives	H2S < 5 PPMV, NH4 < 10 PPMV, water vapor						
2.10	Notes	Combines with flow from W-034A EF-952, also to operate @ 19,000 CFM						

Section 3 – System Requirements		
3.0	Flow Range	19,000 CFM @ 2.5 inWC, VFD control
3.1	Duty	Continuous
3.2	Suction Conditions	Ducted
3.3	Static Pressure Range	(-) 1.5 inWC at suction inlet
3.4	Static Discharge P	1 inWC max
3.6	Dynamic Losses from Inline Equipment	flow to unit through suction vents and 36-inch duct header. No inline filtration.
3.7	Dynamic Losses Duct and Fittings	Included in 3.6.
3.8	Expected max system pressure at req. flow	2.5 inWC
3.9	Detailed Head Loss Calculation Completed?	Yes.

Section 4 - Blower Data					
4.0	Type	Vane axial, belt drive	4.1	Impeller Dia.	36-in
4.2	Mfg.	Greenheck	4.3	Model No.	VAB-36F14-II-500
4.4	Drive	Belt			
4.5	Sheave Ratio	~1.18	4.6	RPM @ 60 Hz	2131
4.7	Flow @ 60 Hz	33,600 CFM air @ 3.9 inWC			
4.8	Suction Flange	36 in RD. see dim. page	4.9	Discharge Flange	36 in round
4.10	Weight	1608 lbs	4.11	base dim	40 x 35
4.12	Height	67” max with motor			

4.9	Notes:	Supplied and installed as part of the base building contract.

Section 5 - Motor Data					
5.0	Motor HP	50	5.1	Frame	326T
5.2	RPM	1800	5.3	Voltage	3-ph 460 / FLA 65
5.4	SF	1.15	5.5	Duty	Continuous
5.6	Eff.	IE4	5.7	X-proof	Not required / installed outdoors
5.8	Encl.	TEFC	5.9	Mfg.	Baldor is preferred

Section 6 – Flow Range				
CFM	**SP (inWC)**	**RPM**	**Hz**	**BHP**
19,000	2.5	1450	41	<30 HP
33,600	3.9	2131	60	<50 HP
Notes	Blower will normally operate together with W-034A, with both producing 19,000 CFM. It may also operate on its own up to 33,600 CFM.			

Performance	
Quantity	1
Volume (CFM)	33,600
Total External SP (in. wg)	3.9
Total TP (in. wg)	5.221
Operating Power (hp)	39.1
Required Power (hp)	39.1
Fan RPM	2131
Max Fan RPM	2,165
Elevation (ft)	617
Start-up Temp.(F)	70
Operating Temp.(F)	70

Fan Configuration	
Size	36
Class	II
Arrangement	9
Discharge Position	Horizontal
Mounting	Base Mount
Material Type	Steel
Impeller Material	Aluminum

Equipment Weights	
Fan (LMD)(lb)	800
Motor/Drive (lb)	737
Accessories (lb)	71

Misc Fan Data	
FEG	75
Outlet Velocity (ft/min)	4,656
Static Efficiency (%)	54
Tip Speed (ft/min)	20,225
Thrust Weight (%)	12.2
Thrust Force (lb)	196

Motor and Drives	
Motor	Included
Size (hp)	50
RPM	1725
Enclosure	TEFC
V/C/P	460/60/3
Frame Size	326T
Max Frame Size	326
Location	A
Pulley Type	Constant
Drive Loss (%)	3.2
Drives	Standard
Drive Service Factor	1.5
NEC FLA* (Amps)	65

Model: VAB-36F14-II-500
Vane Axial Belt Drive

Tags: EF-953

Operating Performance

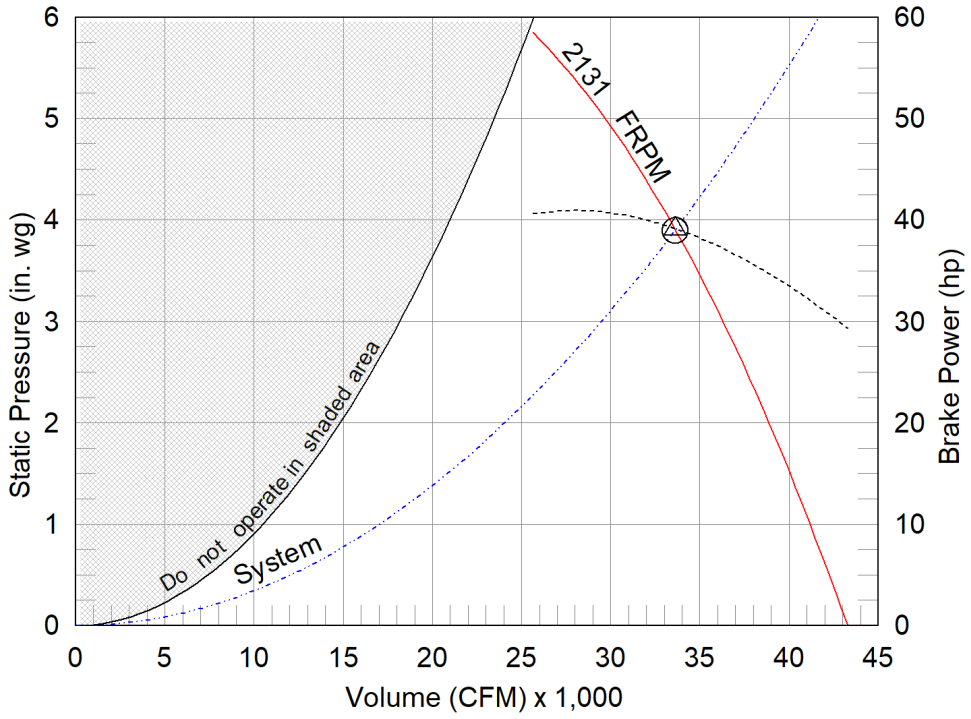

△ Operating Bhp point
◯ Operating point at Total External SP
Fan curve
System curve
Brake horsepower curve

Sound Power by Octave Band

Sound Data	62.5	125	250	500	1000	2000	4000	8000	LwA	dBA
Inlet	100	105	112	110	109	107	103	96	114	102

*FLA - based on tables 150 or 148 of National Electrical Code 2002. Actual motor FLA may vary, for sizing thermal overload, consult factory.
LwA - A weighted sound power level, based on ANSI S1.4
dBA - A weighted sound pressure level, based on 11.5 dB attenuation per octave band at 5 ft- dBA levels are not licensed by AMCA International

Model: VAB-36F14-II-500

Vane Axial Belt Drive

Standard Construction Features:

HOUSING: Continuously welded steel housing - Welded steel straightening vanes - Inlet and outlet flanges with mounting holes - Heavy gauge steel motor supports with adjustment screws for belt tensioning - Structural parts are phosphatized and coated with Permatector.

BEARINGS, SHAFT, AND WHEEL: Heavy duty, self-aligning ball or roller pillow block bearings with extended lubrication lines - Precision-ground, polished, solid steel shafts - Aircraft quality, heat treated A356-T6 cast aluminum rotor hub and blades.

Selected Options & Accessories:

NEMA Premium Efficient Motor - meets NEMA Table 12-12
Motor VFD Rated without Shaft Grounding Protection
Motor with Class B or Greater Insulation
Standard Drives
Coating - Permatector, Concrete Gray-RAL 7023, Fan and Attached Accessories
Mounting Brackets - Base Mount
UL/cUL-705 - "Power Ventilators"
Belt Guard
Thrust Restraints
Housing is not sealed for outdoor use
Unit Warranty: 1 Yr (Standard)

Model: VAB-36F14-II-500 Vane Axial Belt Drive

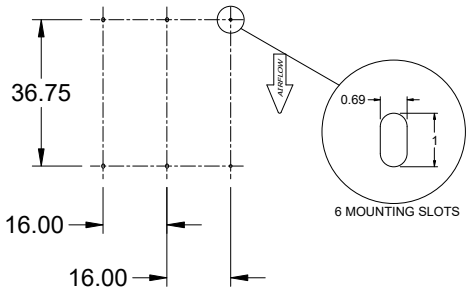

FOOTPRINT VIEW

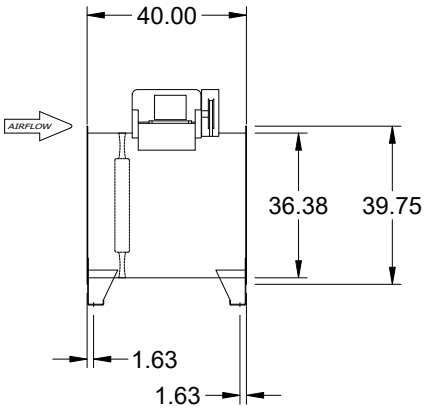

SIDE VIEW

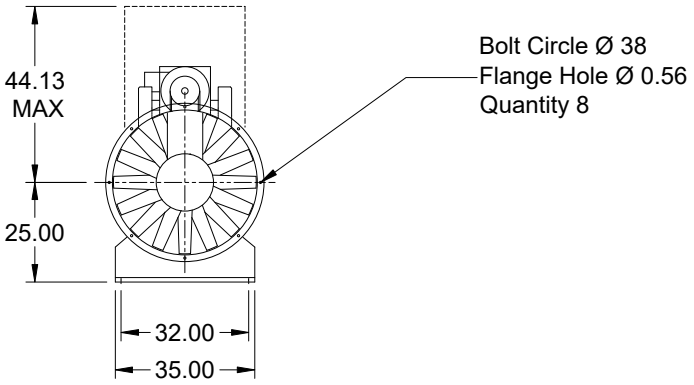

END VIEW

END VIEW SHOWS FROM OUTLET END OF UNIT
UNIT IS NOT FIELD ROTATABLE

Notes: All dimensions shown are in units of in.

AMCA

AMCA Licensed for Air Performance. Power rating (BHP/kW) includes transmission losses.

Greenheck Fan Corporation certifies that the model shown herein is licensed to bear the AMCA Seal. The ratings shown are based on tests and procedures performed in accordance with AMCA Publication 211 and comply with the requirements of the AMCA Certified Ratings Program. The AMCA Certified Ratings Seal applies to air performance ratings only. Performance certified is for installation type D - Ducted inlet, ducted outlet. Performance ratings do not include the effects of appurtenances (accessories) in the airstream. Power ratings (BHP/kW) include transmission losses.

VAB-36F14-II-500

Mark: EF-953 Process Hall

Chart Type: RPM Family

Requested Volume (CFM)	33,600	Actual Volume (CFM)	33,600	Total External SP (in. wg)	3.9
Elevation (ft)	617	Airstream Temp. (F)	70	Operating Power (hp)	39.1
Drive Loss (%)	3.2	Fan RPM	2131	Static Efficiency (%)	54

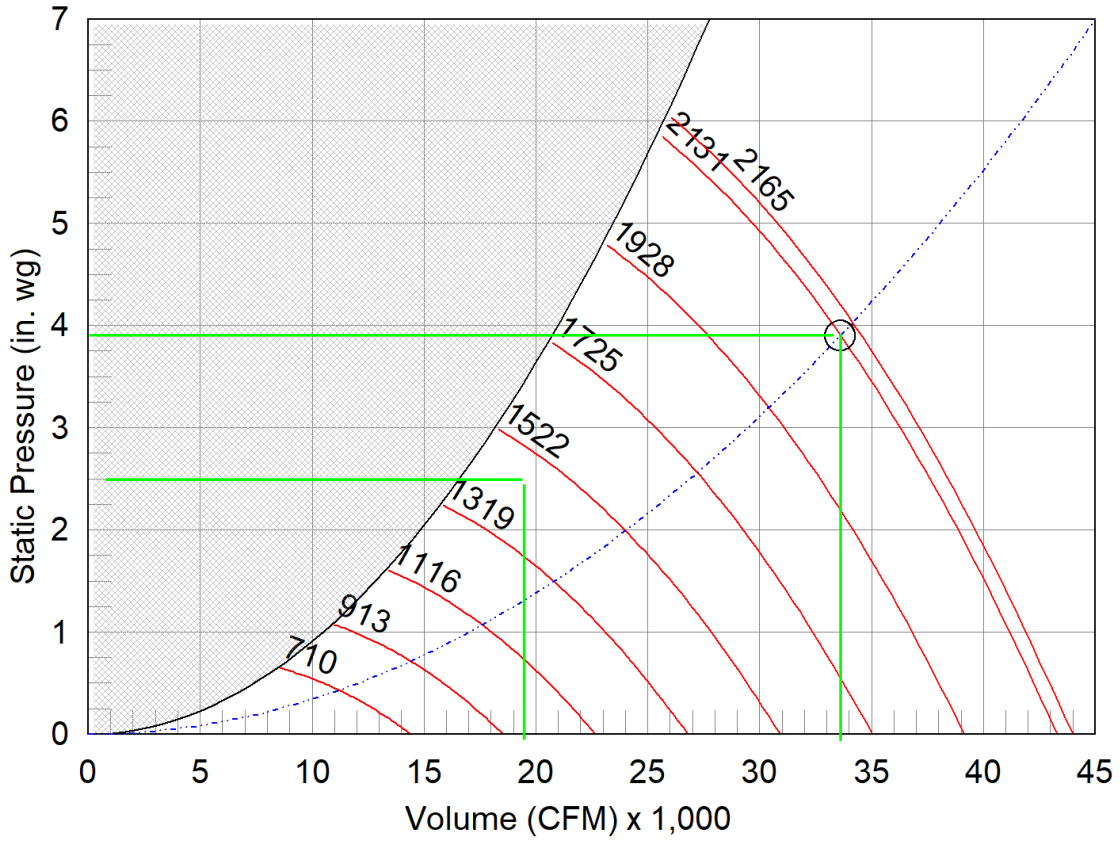

Operating Bhp point
Operating point at Total External SP
Fan curve
System curve
Brake horsepower curve

Sound Power by Octave Band

Sound Data	62.5	125	250	500	1000	2000	4000	8000	LwA	dBA	Sones
Inlet	100	105	112	110	109	107	103	96	114	102	148

LwA - A weighted sound power level, based on ANSI S1.4
dBA - A weighted sound pressure level, based on 11.5 dB attenuation per Octave band at 5 ft. dBA levels are not licensed by AMCA International
Sones - calculated using AMCA 301 at 5 ft

W-036 Ionization Reactor Blower

4,120 CFM @ 2 inWC with 3 HP motor

(7000 m3/h)

REVISION LEVEL	DATE	DESCRIPTION	BY
0	10/17/21	INITIAL RELEASE	NMAST

Section 1 - Basic Equip. Data		
1.0	Tag No.	W-036
1.1	Pulls from	Outdoor air, inlet is filtered
1.2	Blows to	Mixing plenum U-036
1.3	Installation	Inside 40’ ISO mechanical container

Section 2 – Fluid Properties								
2.0	Fluid Desc.	Fresh outdoor air, not conditioned						
2.1	TS%	N/A	2.2	RH range	50-100%	2.3	Temp. range	10 - 100° F
2.4	S.G.	1	2.5	Viscosity	0.0187 cP	2.6	Phase	Gas
2.7	Flammable		No					
2.8	Abrasives	Moisture may be present.						
2.9	Corrosives	None						
2.10	Notes	Provide inlet air filter per ionizer recommendation						

Section 3 – System Requirements		
3.0	Flow Range	4,120 CFM @ 2 inWC, VFD control to low of 0.5 inWC @ same flow rate
3.1	Duty	Continuous
3.2	Suction Conditions	Ducted
3.3	Static Pressure Range	(-) 0 to (-) 0.4 inWC at suction inlet
3.4	Static Discharge P	1.6 inWC max
3.6	Dynamic Losses from Inline Equipment	Allow for 2 inWC total SP.
3.7	Dynamic Losses Duct and Fittings	Included in 3.6.
3.8	Expected max system pressure at req. flow	2 inWC
3.9	Detailed Head Loss Calculation Completed?	No. Need losses for ionizer banks and filter spec.

Section 4 - Blower Data					
4.0	Type	Backward Inclined. Single width	4.1	Impeller Dia.	24 inch nom.
4.2	Mfg.	New York Blower	4.3	Model No.	SWSI size24 cl. 1
4.4	Drive	Belt, provide guard			
4.5	Sheave Ratio	~1.73	4.6	RPM @ 60 Hz	1038
4.7	Flow @ 60 Hz	4,120 CFM air @ 2 inWC			
4.8	Suction	27 in RD. duct see dim. page	4.9	Discharge Flange	Rect., bolt flange. ~27 x 18, see dim. page
4.10	Weight	838 lbs	4.11	base dim	54.5 x 38.5

4.12	Height	58.5 with base			
4.9	Notes:	Arrangement 1, unitary base. CCW rotation from driven side. Motor position "W", blower outlet, top horizontal (TH)			

Section 5 - Motor Data					
5.0	Motor HP	3	5.1	Frame	182T
5.2	RPM	1800	5.3	Voltage	3-ph 460
5.4	SF	1.15	5.5	Duty	Continuous
5.6	Eff.	IE4	5.7	X-proof	Not required
5.8	Encl.	TEFC	5.9	Mfg.	Baldor is preferred

Section 6 – Flow Range				
CFM	**SP**	**RPM**	**Hz**	**BHP**
4,120	2 inWC	1038	60	<3 HP
Notes	Blower will normally will operate near flow set-point, but pressure range may vary and primarily depend on outlet air pressure in the mixing plenum from the building exhaust fans W-034AB (EF-952, EF-953)			

The New York Blower Company
Fan-to-Size
Fan Selection Detail

W-036 - ionization blower
4120 CFM @ 2inWC

Fan Design

Product:	Backward Inclined SWSI
Type:	Backward-Inclined
Size:	24
Fan Class:	1
Wheel Type:	Backward Inclined (airfoil: ACF/ECF) - ACF
Wheel Material:	Carbon Steel
Wheel Weight:	71.0 lb
Wheel WR²:	38 lb-ft2
Percent Width:	100%
Percent Diameter:	100.0%
Outlet Area:	3.45 sq. ft.
Options:	None

Axial thrust load is 46.4 lbf.

Calculation Mode: Find Speed

Drive Type:	Belt
Arrangement:	1
Outlet Velocity:	1220 ft/min
Static Efficiency:	73.08%
Total Efficiency:	76.4%
Operating Temp:	70° F
Maximum Temp:	100° F
Maximum Speed: (1)	1779 RPM
Velocity Pressure:	0.09 in wg
Fan Static Pressure:	2 in wg
Fan Total Pressure:	2.09 in wg
Altitude:	600 ft

Conditions (Standard Volume; Fan Static Pressure)

	Flow	Pressure	Power	Speed	Speed Limit (2)	Density	Altitude	Inlet Temp.
	SCFM	in wg (FSP)	bhp	rpm	rpm	lb/ft3	ft	F
Operating	4120	2	1.82	1038	1790	0.0734	600	70
Cold	4120	2.26	2.05	1038	1790	0.0828	600	10
Standard	4120	2.04	1.86	1038	1790	0.0750	0	70

(1) Speed Limit at Maximum Temperature (2) Speed Limit at indicated Inlet Temperature

My Sales Representative

Air McClure Co.
19111 Detroit Rd Suite 307 Rocky River, OH 44116, USA
(P) 440.356.7332, (F) 440.356.9339
nyb@airmcclure.com

The New York Blower Company certifies that the Backward Inclined SWSI fan is licensed to bear the AMCA Air Performance Seal. The ratings shown are based on tests and procedures performed in accordance with AMCA Publication 211 and comply with the requirements of the AMCA Certified Ratings program. AMCA Licensed for Air Performance without Appurtenances (Accessories). Power HP (bhp) excludes drives. Performance certified is for installation type: B - free inlet, ducted outlet.

Copyright 2016-2019 New York Blower

Sound Power Level Ratings

Sound power and sound pressure levels are shown in decibels. (Power levels reference 10-12 watts and pressure levels reference 2x10-7 microbar.) Sound power ratings are calculated per AMCA Standard 301. Ratings do not include the effects of duct end correction. Sound levels do not include motors or drives. Pressure levels are estimated. A-weighing is per ANSI S.1.42-2001 (R2011).

Fan Sound

Center Freq (Hz)	63	125	250	500	1000	2000	4000	8000	Overall
Octave	1	2	3	4	5	6	7	8	
Inlet Total Power, dB	78	82	80	74	71	66	60	55	**86**
Point of Operation	0	-2	-4	-2	-3	-3	-4	-4	
A-Weighting	-26.2	-16.1	-8.6	-3.2	0	1.2	1	-1.1	
Convert To Pressure	-17.5	-17.5	-17.5	-17.5	-17.5	-17.5	-17.5	-17.5	
Inlet Total Pressure, dBA	34	46	50	52	51	47	40	33	**57**
Outlet Total Power, dB	78	82	80	74	71	66	60	55	**86**
Point of Operation	0	-2	-4	-2	-3	-3	-4	-4	
A-Weighting	-26.2	-16.1	-8.6	-3.2	0	1.2	1	-1.1	
Convert To Pressure	-17.5	-17.5	-17.5	-17.5	-17.5	-17.5	-17.5	-17.5	
Outlet Total Pressure, dBA	34	46	50	52	51	47	40	33	**57**
Fan Total Power, dB	81	85	83	77	74	69	63	58	**89**
Point of Operation	0	-2	-4	-2	-3	-3	-4	-4	
Housing Radiated Noise	-5	-9	-12	-15	-12	-11	-13	-14	
A-Weighting	-26.2	-16.1	-8.6	-3.2	0	1.2	1	-1.1	
Convert To Pressure	-17.5	-17.5	-17.5	-17.5	-17.5	-17.5	-17.5	-17.5	
Fan Total Pressure, dBA	32	40	41	40	42	39	30	22	**48**

Directivity/Reflection is a hemispherical radiation (Q = 2); Distance is 10 ft.
At 10 ft, the estimated sound pressure level:

1. outside the fan due to an open inlet OR outlet is 57 dBA.
2. housing radiated noise when inlet and outlet are ducted away from listening point is 48 dBA.

The sound power and pressure levels displayed here are estimated values based on tests and ratings conducted in accordance with AMCA standards 300 and 301. AMCA does not certify any of these ratings.

Copyright 2016-2019 New York Blower

The New York Blower Company
Fan-to-Size
Fan Selection Detail

% SPD	RPM	Hz
110%	1142	66
100%	1038	60
90%	934	54
80%	830	48

Product: Backward Inclined SWSI
Material: Carbon Steel
Fan Size: 24, Fan Class: 1
Arrangement: 1
Wheel Type: Backward Inclined (airfoil: ACF/ECF) - ACF
Options: None

Standard Volume Flow Rate: 4120 SCFM
Fan Static Pressure: 2 in wg
Speed: 1038 rpm
Power: 1.82 bhp

Inlet Temperature: 70 °F
Altitude: 600 ft
Density: 0.0734 lb/ft3
Outlet Velocity: 1220 ft/min

Additional fan speeds shown: 1142 RPM, 935 RPM, 831 RPM.

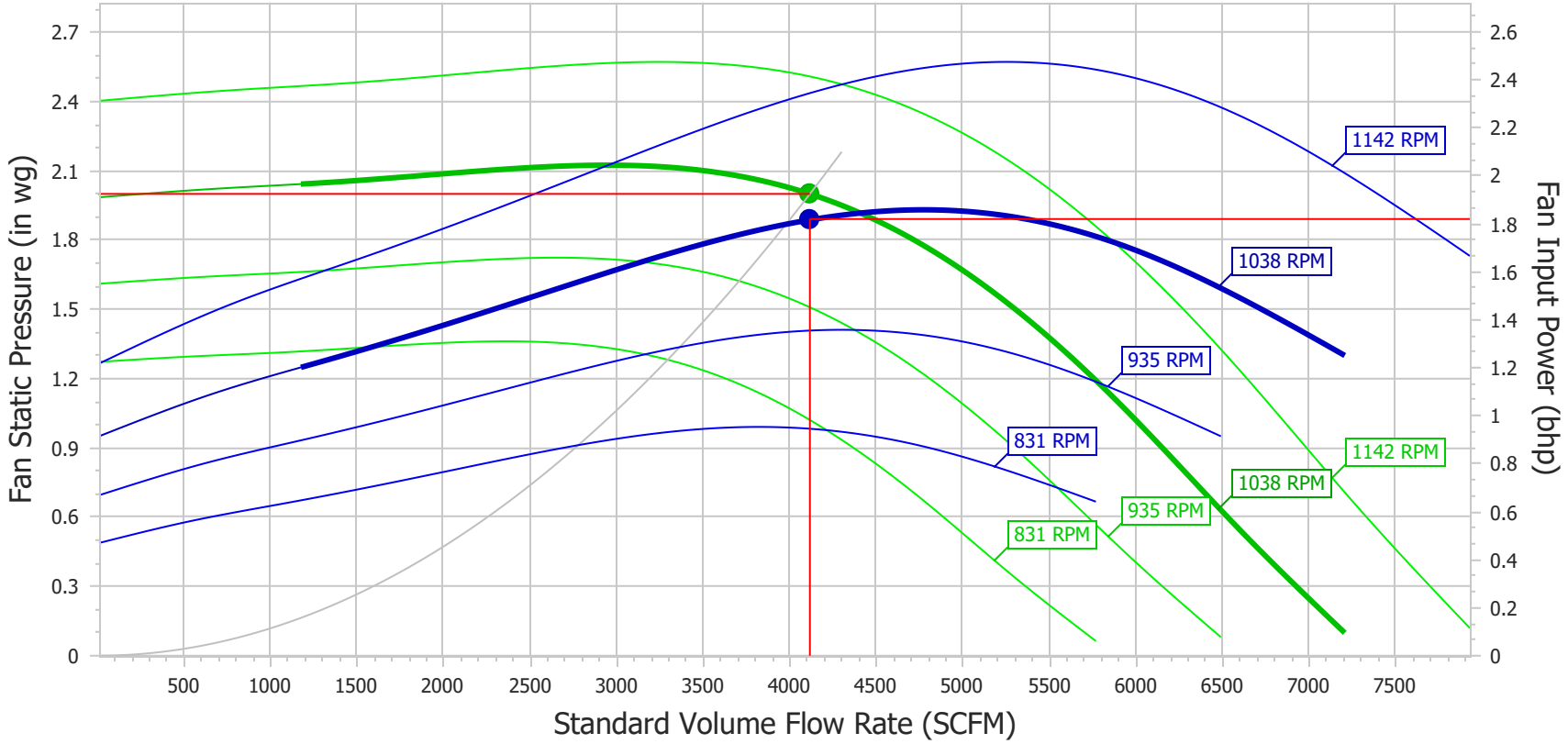

AMCA Licensed for Air Performance without Appurtenances (Accessories). Power HP (bhp) excludes drives. Performance certified is for installation type: B - free inlet, ducted outlet.

Copyright 2016-2019 New York Blower

SPECIFYING SINGLE-WIDTH ACOUSTAFOIL FANS

GENERAL

The fans shall be size 24 single-width single-inlet capable of operating over the entire range in accordance with the equipment schedule and as defined in AMCA Standard 99-2408 as designed and manufactured by The New York Blower Company. Fan wheels shall utilize non-overloading airfoil blades in all sizes. Unless otherwise directed, fans shall be in compliance with the layout shown on the drawings.

PERFORMANCE

Fan ratings shall be based on tests made in accordance with AMCA Standard 210 and licensed to bear the AMCA Certified Ratings Seal for Air Performance. Fans not licensed to bear the AMCA Seal for performance shall be tested, at supplier's expense, in an AMCA Registered Laboratory. (Option: Only AMCA certified fans will be accepted.) Fans shall have a sharply rising pressure characteristic extending throughout the operating range to assure quiet and stable operation under all conditions from wide open to closed off. Fan brake horsepower shall be equal to or less than 1.82 bhp at 2 in wg static pressure and 4120 cfm at 0.0734 lb/ft3 density.

SOUND

Fan manufacturers shall provide sound power level ratings for fans tested and rated in accordance with AMCA Standards 300 and 301. Sound power ratings shall be in decibels (reference 10-12 watts) in eight octave bands. Sound power levels will be corrected for installation by the specifying engineer...dBA levels only are not acceptable.

CONSTRUCTION

Fan housings are to be heavy gauge, continuously welded construction. Housings with lock seams or partially welded construction are not acceptable. Housings are to be reinforced with rigid bracing to increase structural integrity and prevent vibration. Housing inlet cones shall be aerodynamically designed and spun providing a minimum separation of air flow. Wheel diameters and outlet areas shall be in accordance with the standard dimensions adopted by AMCA for centrifugal fans. Designs not in accordance with AMCA Standard 99-2401 are not acceptable.

BEARINGS

Bearings are to be heavy duty, grease lubricated, precision anti-friction ball or spherical roller, self-aligning, pillow block design. Bearings shall be designed for a minimum L-10 life of 40,000 hours (200,000 hour L-50 life) when rated at the fan's maximum cataloged operating speed. (Optional: bearings to have minimum L-10 life of 250,000 hours.)

SHAFT

Shafts are to be ASTM A-108 steel, grade 1040/1045, precision turned, ground and polished. Grade 1018 steel is not acceptable. The shaft's first critical speed shall be at least 125% of the fan's maximum operating speed. The drive end of the fan shaft shall be counter-sunk for tachometer readings.

PAINT

All fan surfaces are to be thoroughly prepared prior to painting using a combination of washing and hand and power tool cleaning as required. After cleaning, all surfaces are to be coated with an industrial grade alkyd enamel. Surfaces of bolted components not accessible after assembly shall be coated and allowed to dry prior to final assembly. Primer only will not be accepted.

BALANCE AND RUN TEST

All fan wheels shall be dynamically balanced on precision balancers. Prior to shipment, completed fans shall receive a final test balance at the specified operating speed.

Copyright 2016-2019 New York Blower

ACCESSORIES

Accessories shall be provided as in the plans and specifications.
Required accessories include (select appropriate items):

_X_ Cleanout Door:
- ___ Quick Opening
- ___ Flush Bolted
- _X_ Raised Bolted

___ Spark-Resistant Construction:
- ___ Airstream Type
- ___ Wheel Type
- ___ Buffer Type

_X_ Drain
___ Drain Plug
___ Split Housing (non-rotatable fans only)
_X_ Flanged Outlet
___ Outlet Companion Flange
___ Shaft Seal:
- ___ Ceramic Felt
- ___ Buna-N
- ___ Viton®
- ___ Teflon®

___ Flanged Inlet
___ Inlet Companion Flange
___ Inlet-Vane Damper:
- ___ Internal
- ___ External

___ Heat-Fan Construction
___ Heavy-Duty Slide Rails (Arrangement 9 only)
_X_ Outlet Damper:
- _X_ Parallel Blade
- ___ Opposed Blade

_X_ Safety Equipment:
- _X_ Belt Guard with Tachometer Opening and Plug
- ___ Shaft and Bearing Guard with Extended Bearing Lubrication Fittings
- ___ Inlet Guard
- ___ Outlet Guard

_X_ Unitary Base
___ Isolation Base:
- ___ Spring
- ___ Rubber-In-Shear

_X_ V-Belt Drive:
- ___ Adjustable
- _X_ Constant

___ Flexible Coupling

FINAL INSPECTION

All fans shall receive a final inspection by a qualified inspector prior to shipment. Inspection to include: fan description and accessories, balance, welding, dimensions, bearings, duct and base connection points, paint finish and overall workmanship.

Viton and Teflon are registered trademarks of DuPont Dow Elastomers and DuPont respectively.

Copyright 2016-2019 New York Blower

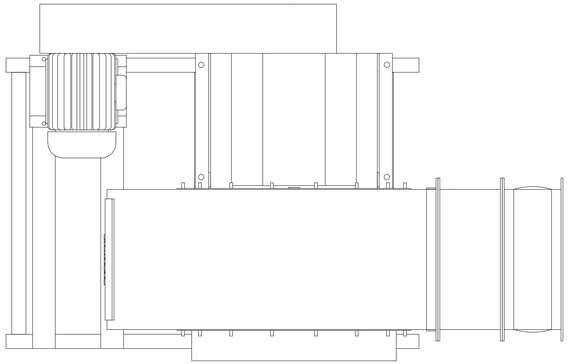

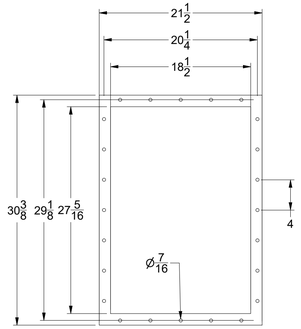

OUTLET FLANGE

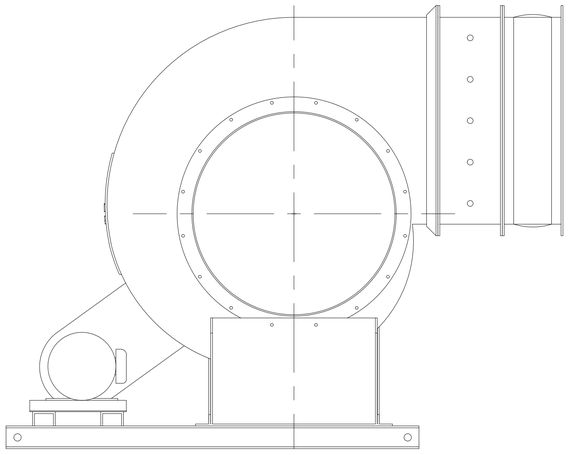

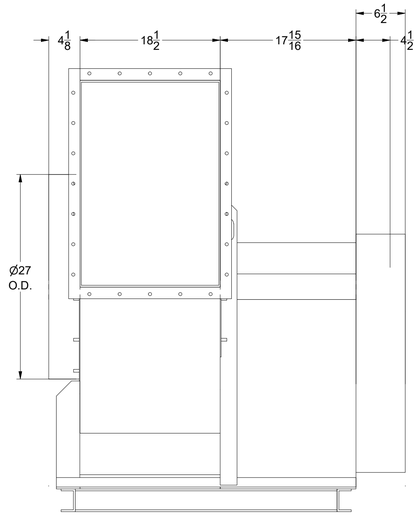

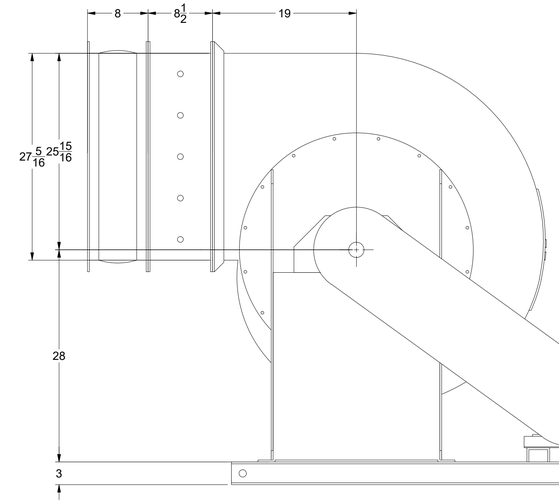

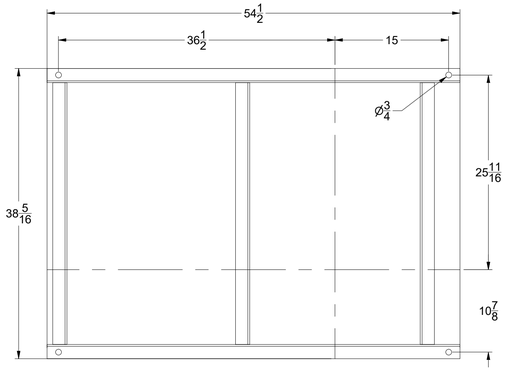

EST FAN SHIPPING WEIGHT 837.9#
EST SHIPPING DIM 98 W X 71 L X 70 H

CUSTOMER Green Era
CUSTOMER'S NO.
FILE NO. DOD189670
TAGGING W-036

NOTICE: This drawing is the property of THE NEW YORK BLOWER CO. and is loaned subject to the condition that it shall not be reproduced, copied, loaned or submitted to outside parties without our consent.

24 BACKWARD INCLINED SWSI
CLASS I CCW TH
Arrangement 1
Motor Pos W

PROPOSAL DRAWING ONLY

DRAWN DOD | DATE 10/16/2021

nyb THE NEW YORK BLOWER COMPANY
7660 Quincy Street
Willowbrook, IL 60527-5530
Visit us on the Web: http://www.nyb.com
Phone: (800) 208-7918 Email: nyb@nyb.com

DRAWING NUMBER
DOD189670

W-038 Odor Scrubber Blower

42,000 CFM @ 12 inWC with 125 HP motor

REVISION LEVEL	DATE	DESCRIPTION	BY
0	10/17/21	INITIAL RELEASE	NMAST

Section 1 - Basic Equip. Data		
1.0	Tag No.	W-038
1.1	Pulls from	Carbon Bed, T-038, via building, ducted supply, W-034AB, ionization reactor, W-036
1.2	Blows to	Exhaust stack
1.3	Installation	Inside sound enclosure that is not conditioned. May pull air for ionizers through the container for motor cooling.

Section 2 – Fluid Properties								
2.0	Fluid Desc.	Odorous air from building, 38,000 CFM						
2.1	TS%	N/A	2.2	pH range	N/A	2.3	Temp. range	55 - 100° F
2.4	S.G.	1	2.5	Viscosity	0.0187 cP	2.6	Phase	Gas
2.7	Flammable		No					
2.8	Abrasives	Dust and moisture will be present.						
2.9	Corrosives	H2S < 5 PPMV, NH4 < 10 PPMV, water vapor						
2.10	Notes	Combines with flow from ionization blower W-036 @ 4120 CFM						

Section 3 – System Requirements		
3.0	Flow Range	42,000 CFM @ 12 inWC, VFD control to low of 4 inWC @ same flow rate
3.1	Duty	Continuous
3.2	Suction Conditions	Ducted
3.3	Static Pressure Range	(-) 0 to (-) 9 inWC at suction inlet
3.4	Static Discharge P	12 inWC max
3.6	Dynamic Losses from Inline Equipment	Allow for 12 inWC total SP. Estimated total pressure drop is 7 inWC when bed is fouled. See head loss calculation sheet.
3.7	Dynamic Losses Duct and Fittings	Included in 3.6.
3.8	Expected max system pressure at req. flow	7 inWC
3.9	Detailed Head Loss Calculation Completed?	Yes. See “activated carbon bed sizing calcs”, attached.

Section 4 - Blower Data					
4.0	Type	Backward Inclined. Single width	4.1	Impeller Dia.	44 inch nom.
4.2	Mfg.	New York Blower	4.3	Model No.	SWSI size44 cl. 3
4.4	Drive	Belt, provide guard			
4.5	Sheave Ratio	~1.25	4.6	RPM @ 60 Hz	1445
4.7	Flow @ 60 Hz	42,000 CFM air @ 12 inWC			

4.8	Suction Flange	48 in RD. see dim. page	4.9	Discharge Flange	Rect., bolt flange. ~48 x 34, see dim. page
4.10	Weight	5500 lbs	4.11	base dim	109 x 72
4.12	Height	96 with base			
4.9	Notes:	Arrangement 1, unitary base. CCW rotation from driven side. Motor position "W", blower outlet, top horizontal (TH)			

Section 5 - Motor Data					
5.0	Motor HP	125	5.1	Frame	444T
5.2	RPM	1800	5.3	Voltage	3-ph 460
5.4	SF	1.15	5.5	Duty	Continuous
5.6	Eff.	IE4	5.7	X-proof	Not required / installed outdoors
5.8	Encl.	TEFC	5.9	Mfg.	Baldor is preferred

Section 6 – Flow Range				
CFM	**SP**	**RPM**	**Hz**	**BHP**
42,000	12 inWC	1445	60	<100HP
Notes	Blower will normally will operate near flow set-point, but pressure range is expected to start below 5 inWC when the carbon bed is new and climb to over 7 when fouled. Will need to balance with supply side blowers. Building exhaust fans W-034ab, and ionizer reactor blower, W-036.			

The New York Blower Company
Fan-to-Size
Fan Selection Detail

W-038 - primary exhaust fan capable of 42,120 CFM @ 12 inWC expected op. range: 42,120 CFM between 5 and 7 inWC

125 HP motor, 1800 RPM. Operate on VFD.

Fan Design

Product:	Backward Inclined SWSI
Type:	Backward-Inclined
Size:	44
Fan Class:	3
Wheel Type:	Backward Inclined (airfoil: ACF/ECF) - ACF
Wheel Material:	Carbon Steel
Wheel Weight:	358.0 lb
Wheel WR²:	597 lb-ft2
Percent Width:	100%
Percent Diameter:	100.0%
Outlet Area:	11.39 sq. ft.
Options:	Silencer(s): 1 long inlet

Axial thrust load is 1034.4 lbf.

Calculation Mode: Find Speed

Drive Type:	Belt
Arrangement:	1
Outlet Velocity:	3768 ft/min
Static Efficiency:	82.14%
Total Efficiency:	88.1%
Operating Temp:	70° F
Maximum Temp:	100° F
Maximum Speed: (1)	1486 RPM
Velocity Pressure:	0.867 in wg
Fan Static Pressure:	12 in wg
Fan Total Pressure:	12.9 in wg
Altitude:	600 ft

Conditions (Standard Volume; Fan Static Pressure)

	Flow	Pressure	Power	Speed	Speed Limit (2)	Density	Altitude	Inlet Temp.
	SCFM	in wg (FSP)	bhp	rpm	rpm	lb/ft3	ft	f
Operating	42000	12	98.8	1445	1495	0.0734	600	70
Cold	42000	13.5	111	1445	1495	0.0828	600	10
Standard	42000	12.3	101	1445	1495	0.0750	0	70

(1) Speed Limit at Maximum Temperature (2) Speed Limit at indicated Inlet Temperature

My Sales Representative

Air McClure Co.
19111 Detroit Rd Suite 307 Rocky River, OH 44116, USA
(P) 440.356.7332, (F) 440.356.9339
nyb@airmcclure.com

The New York Blower Company certifies that the Backward Inclined SWSI fan is licensed to bear the AMCA Air Performance Seal. The ratings shown are based on tests and procedures performed in accordance with AMCA Publication 211 and comply with the requirements of the AMCA Certified Ratings program. AMCA Licensed for Air Performance without Appurtenances (Accessories). Power HP (bhp) excludes drives. The data presented is not certified, and was modified from AMCA licensed performance data. It was modified to account for ** Silencer **, which were not included in the licensed ratings. This modified performance is not AMCA licensed but is provided to aid in selection and application of the product. Performance certified is for installation type: B - free inlet, ducted outlet.

Copyright 2016-2019 New York Blower

use a silencer on the exhaust stack

Sound Power Level Ratings

Sound power and sound pressure levels are shown in decibels. (Power levels reference 10-12 watts and pressure levels reference 2x10-7 microbar.) Sound power ratings are calculated per AMCA Standard 301. Ratings do not include the effects of duct end correction. Sound levels do not include motors or drives. Pressure levels are estimated. A-weighing is per ANSI S.1.42-2001 (R2011).

Fan Sound (Silencer(s): 1 long inlet)

Center Freq (Hz)	63	125	250	500	1000	2000	4000	8000	Overall
Octave	1	2	3	4	5	6	7	8	
Inlet Total Power, dB	102	107	112	99	97	93	88	88	**114**
Inlet Silencer	-6	-11	-17	-26	-29	-23	-17	-14	
A-Weighting	-26.2	-16.1	-8.6	-3.2	0	1.2	1	-1.1	
Convert To Pressure	-17.5	-17.5	-17.5	-17.5	-17.5	-17.5	-17.5	-17.5	
Inlet Total Pressure, dBA	53	63	69	52	51	54	55	56	**71**
Outlet Total Power, dB	102	107	112	99	97	93	88	88	**114**
A-Weighting	-26.2	-16.1	-8.6	-3.2	0	1.2	1	-1.1	
Convert To Pressure	-17.5	-17.5	-17.5	-17.5	-17.5	-17.5	-17.5	-17.5	
Outlet Total Pressure, dBA	59	74	86	78	80	77	72	70	**88**
Fan Total Power, dB	105	110	115	102	100	96	91	91	**117**
Housing Radiated Noise	-7	-11	-16	-18	-15	-15	-16	-17	
A-Weighting	-26.2	-16.1	-8.6	-3.2	0	1.2	1	-1.1	
Convert To Pressure	-17.5	-17.5	-17.5	-17.5	-17.5	-17.5	-17.5	-17.5	
Fan Total Pressure, dBA	55	66	73	63	68	65	59	56	**76**

Directivity/Reflection is a hemispherical radiation (Q = 2); Distance is 10 ft.
At 10 ft, the estimated sound pressure level:

1. at silencer inlet is 71 dBA.
2. outside the fan due to an open outlet is 88 dBA.
3. housing radiated noise when inlet and outlet are ducted away from listening point is 76 dBA.

The sound power and pressure levels displayed here are estimated values based on tests and ratings conducted in accordance with AMCA standards 300 and 301. AMCA does not certify any of these ratings.

Copyright 2016-2019 New York Blower

The New York Blower Company
Fan-to-Size
Fan Selection Detail

125 HP motor, 1800 RPM. Operate on VFD.

% SPD	RPM	Hz
100%	1445	60
90%	1301	54
85%	1228	51
80%	1156	48

Product: Backward Inclined SWSI
Material: Carbon Steel
Fan Size: 44, Fan Class: 3
Arrangement: 1
Wheel Type: Backward Inclined (airfoil: ACF/ECF) - ACF
Options: Silencer(s): 1 long inlet

Standard Volume Flow Rate: 42000 SCFM
Fan Static Pressure: 12 in wg
Speed: 1445 rpm
Power: 98.8 bhp

Inlet Temperature: 70 °f
Altitude: 600 ft
Density: 0.0734 lb/ft3
Outlet Velocity: 3768 ft/min

Additional fan speeds shown: 1300 RPM, 1228 RPM, 1156 RPM.

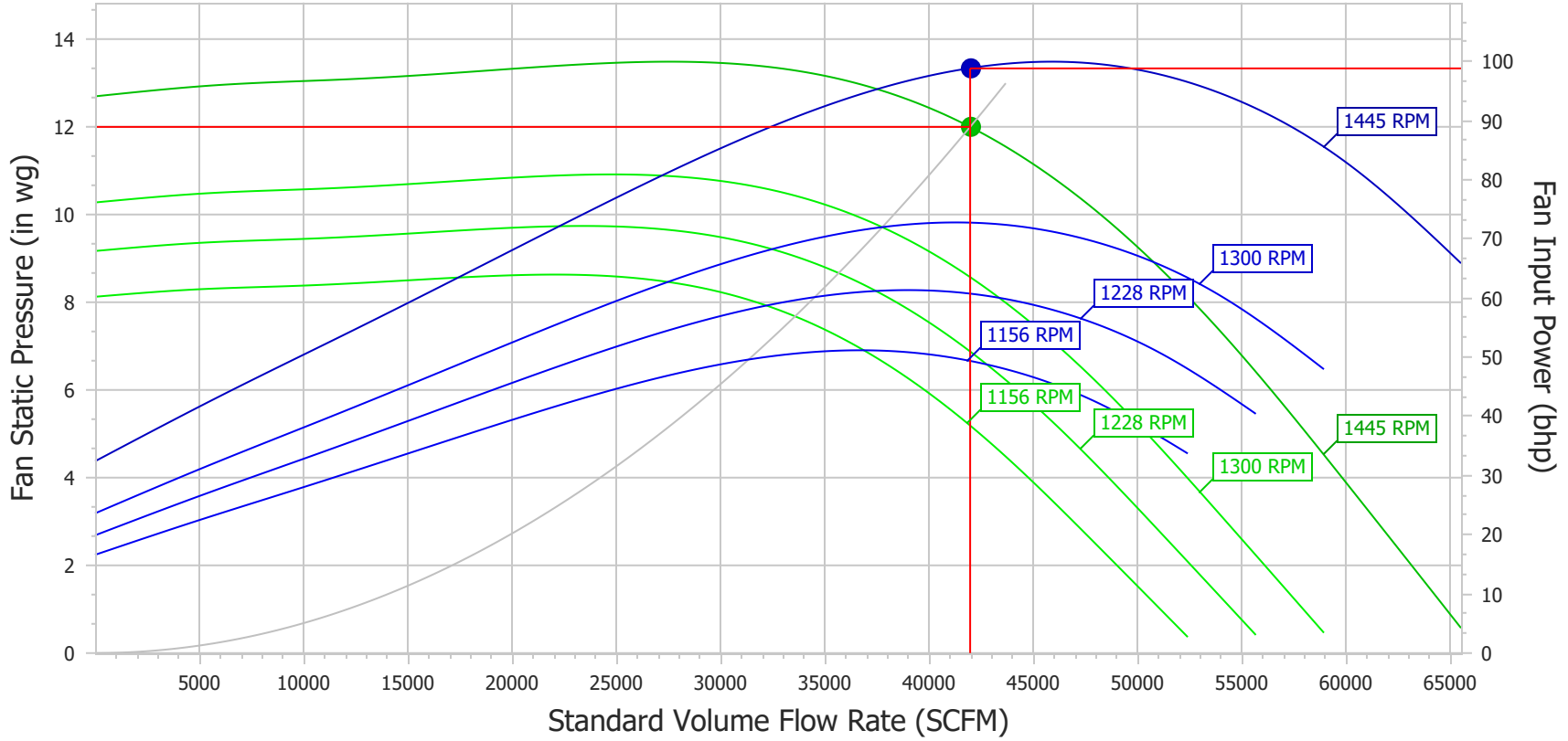

AMCA Licensed for Air Performance without Appurtenances (Accessories). Power HP (bhp) excludes drives. The data presented is not certified, and was modified from AMCA licensed performance data. It was modified to account for ** Silencer **, which were not included in the licensed ratings. This modified performance is not AMCA licensed but is provided to aid in selection and application of the product. Performance certified is for installation type: B - free inlet, ducted outlet.

Copyright 2016-2019 New York Blower

SPECIFYING SINGLE-WIDTH ACOUSTAFOIL FANS

GENERAL

The fans shall be size 44 single-width single-inlet capable of operating over the entire range in accordance with the equipment schedule and as defined in AMCA Standard 99-2408 as designed and manufactured by The New York Blower Company. Fan wheels shall utilize non-overloading airfoil blades in all sizes. Unless otherwise directed, fans shall be in compliance with the layout shown on the drawings.

PERFORMANCE

Fan ratings shall be based on tests made in accordance with AMCA Standard 210 and licensed to bear the AMCA Certified Ratings Seal for Air Performance. Fans not licensed to bear the AMCA Seal for performance shall be tested, at supplier's expense, in an AMCA Registered Laboratory. (Option: Only AMCA certified fans will be accepted.) Fans shall have a sharply rising pressure characteristic extending throughout the operating range to assure quiet and stable operation under all conditions from wide open to closed off. Fan brake horsepower shall be equal to or less than 98.8 bhp at 12 in wg static pressure and 42000 cfm at 0.0734 lb/ft3 density.

SOUND

Fan manufacturers shall provide sound power level ratings for fans tested and rated in accordance with AMCA Standards 300 and 301. Sound power ratings shall be in decibels (reference 10-12 watts) in eight octave bands. Sound power levels will be corrected for installation by the specifying engineer...dBA levels only are not acceptable.

CONSTRUCTION

Fan housings are to be heavy gauge, continuously welded construction. Housings with lock seams or partially welded construction are not acceptable. Housings are to be reinforced with rigid bracing to increase structural integrity and prevent vibration. Housing inlet cones shall be aerodynamically designed and spun providing a minimum separation of air flow. Wheel diameters and outlet areas shall be in accordance with the standard dimensions adopted by AMCA for centrifugal fans. Designs not in accordance with AMCA Standard 99-2401 are not acceptable.

BEARINGS

Bearings are to be heavy duty, grease lubricated, precision anti-friction ball or spherical roller, self-aligning, pillow block design. Bearings shall be designed for a minimum L-10 life of 40,000 hours (200,000 hour L-50 life) when rated at the fan's maximum cataloged operating speed. (Optional: bearings to have minimum L-10 life of 250,000 hours.)

SHAFT

Shafts are to be ASTM A-108 steel, grade 1040/1045, precision turned, ground and polished. Grade 1018 steel is not acceptable. The shaft's first critical speed shall be at least 125% of the fan's maximum operating speed. The drive end of the fan shaft shall be counter-sunk for tachometer readings.

PAINT

All fan surfaces are to be thoroughly prepared prior to painting using a combination of washing and hand and power tool cleaning as required. After cleaning, all surfaces are to be coated with an industrial grade alkyd enamel. Surfaces of bolted components not accessible after assembly shall be coated and allowed to dry prior to final assembly. Primer only will not be accepted.

BALANCE AND RUN TEST

All fan wheels shall be dynamically balanced on precision balancers. Prior to shipment, completed fans shall receive a final test balance at the specified operating speed.

Copyright 2016-2019 New York Blower

ACCESSORIES

Accessories shall be provided as in the plans and specifications.
Required accessories include (select appropriate items):

__X__ Cleanout Door:
- ___ Quick Opening
- ___ Flush Bolted
- __X__ Raised Bolted

___ Spark-Resistant Construction:
- ___ Airstream Type
- ___ Wheel Type
- ___ Buffer Type

___ Drain
__X__ Drain Plug
___ Split Housing (non-rotatable fans only)
__X__ Flanged Outlet
___ Outlet Companion Flange
___ Shaft Seal:
- ___ Ceramic Felt
- ___ Buna-N
- ___ Viton®
- ___ Teflon®

__X__ Flanged Inlet
___ Inlet Companion Flange
___ Inlet-Vane Damper:
- ___ Internal
- ___ External

___ Heat-Fan Construction
___ Heavy-Duty Slide Rails (Arrangement 9 only)
___ Outlet Damper:
- ___ Parallel Blade
- ___ Opposed Blade

___ Safety Equipment:
- __X__ Belt Guard with Tachometer Opening and Plug
- ___ Shaft and Bearing Guard with Extended Bearing Lubrication Fittings
- ___ Inlet Guard
- ___ Outlet Guard

__X__ Unitary Base
___ Isolation Base:
- ___ Spring
- ___ Rubber-In-Shear

__X__ V-Belt Drive:
- ___ Adjustable
- __X__ Constant

___ Flexible Coupling

FINAL INSPECTION

All fans shall receive a final inspection by a qualified inspector prior to shipment. Inspection to include: fan description and accessories, balance, welding, dimensions, bearings, duct and base connection points, paint finish and overall workmanship.

Viton and Teflon are registered trademarks of DuPont Dow Elastomers and DuPont respectively.

Copyright 2016-2019 New York Blower

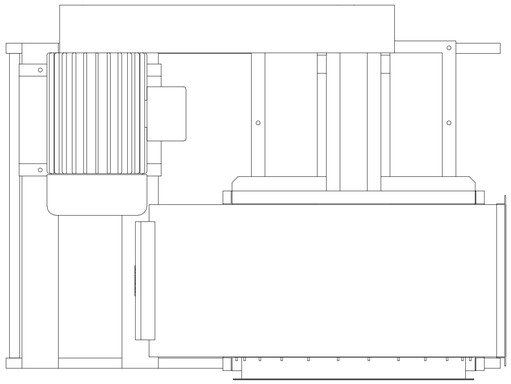

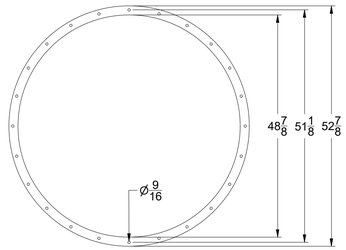

INLET FLANGE

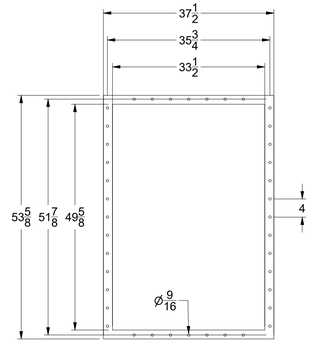

OUTLET FLANGE

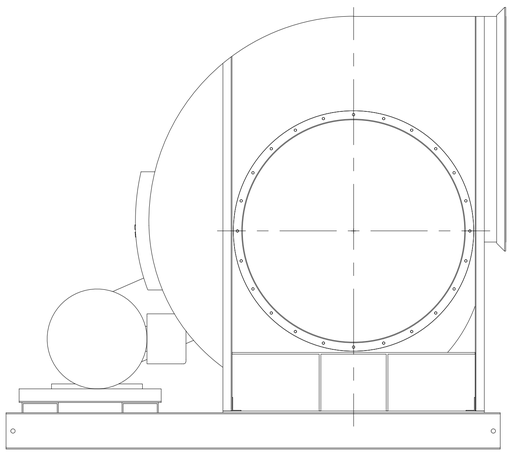

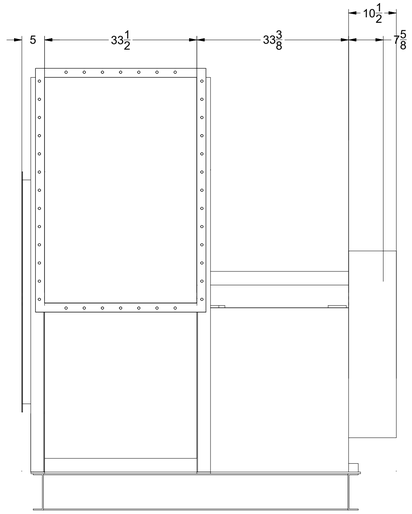

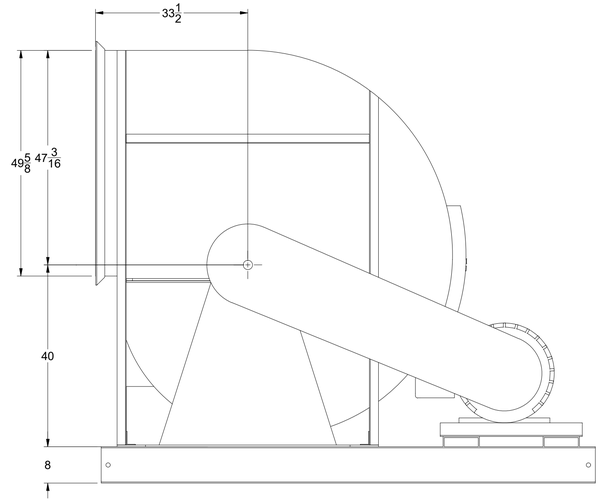

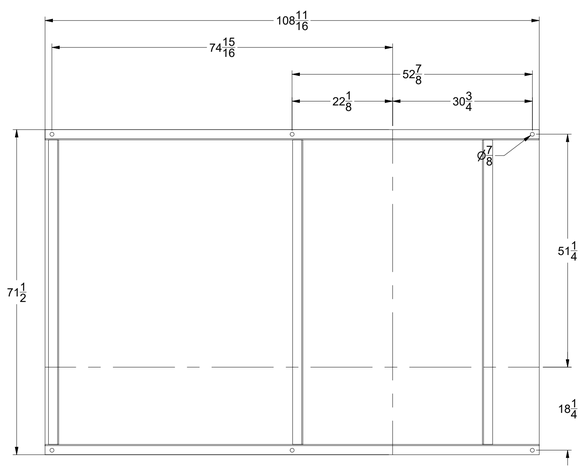

EST FAN SHIPPING WEIGHT 5501#
EST SHIPPING DIM 138 W X 106 L X 109 H

CUSTOMER
CUSTOMER'S NO.
FILE NO. DOD189673
TAGGING

NOTICE: This drawing is the property of THE NEW YORK BLOWER CO. and is loaned subject to the condition that it shall not be reproduced, copied, loaned or submitted to outside parties without our consent.

44 BACKWARD INCLINED SWSI
CLASS III CCW TH
Arrangement 1
Motor Pos W

PROPOSAL DRAWING ONLY

DRAWN DOD | DATE 10/16/2021

nyb THE NEW YORK BLOWER COMPANY
7660 Quincy Street
Willowbrook, IL 60527-6530
Visit us on the Web: http://www.nyb.com
Phone: (800) 208-7918 Email: nyb@nyb.com

DRAWING NUMBER
DOD189673

ODOR CONTROL (MP-08) APPENDIX B
CARBON BED SIZING CALCULATIONS

Appendix B: ODOR CONTROL PLAN

Carbon Bed Sizing Calculations

Prepared By
Green Arrow Engineering
2759 Long Road
Wooster, OH 44691

REVISION LEVEL	DESCRIPTION	ISSUE DATE
R0	INITIAL RELEASE	10/19/21

EQ# **Green Era** **Activated Carbon Bed** T-038 **Prepared by Ned Mast**
Sizing calculations **last revised: 10/17/2021**

Calculate critical design parameters for the building exhaust carbon bed

Type: Vertical deep bed
Use 40-ft high cube container
Carbon type: Calgon Carbon Minotaur OC, 4mm pellet

Results Summary

	Total airflow to carbon bed	42,120	CFM	from eq. 3
	Empty Bed Capacity	879	CF	from eq. 6
	(vol. of carbon)	32.6	CY	
	Air residence time / empty bed contact time			
		1.25	s	from eq. 5
	Breakthrough time for H2S			
1.	highest predicted loading	5,838	h	from eq. 12
2.	expected loading	54,876	h	from eq. 13

1. Loading to the carbon bed if ionizers do not reduce the odorant concentration
2. Loading to the carbon bed if ionizers provide 75% reduction to the odorant loading at each treatment zone

Pressure drop across carbon bed			
loose packed	2.07	inWC	from eq. 7
dense pack (fouled)	4.64	inWC	from eq. 8
Total pressure drop			
blower W-038	6.78	inWC	from eq. 47

Determine carbon holding capacity

	determine face area per bed										
1	8.833	ft	x	30.0	ft	=	265	SF			
	inside height			bed length			filtration bed area per side				
	calc. total filter bed face area										
2	265	SF	x	2	beds	=	530	SF			
	from eq. 1										
	Calc. total airflow to filter										
3	38,000	CFM	+	4120	CFM	=	42,120	CFM			
	bldg. ventilation rate			ionization reactor flow							
	Airflow face velocity										
4	42,120	CFM	/	530	SF	=	79.5	FPM			
	from eq. 3			from eq. 2			1.3	FPS			
	Calc. the average contact time										
5	1.66	ft	/	1.3	FPS	=	1.25	seconds			
	19.9	inches					from eq. 4				
	0.5	meters									
	bed depth										
	Bed volume										
6	530	SF	x	1.66	ft	=	879	CF			
	from eq. 2			from eq. 5			32.6	CY			
	Calculate pressure loss through the bed, new condition										
7	1.66	ft	x	1.25	inWC/ft @ 80 FPS	=	2.07	inWC			
	from eq. 5			Calgon Carbon data sheet, loose fill							
	Calculate pressure loss through the bed, fouled										
8	1.66	ft	x	2.8	inWC/ft @ 80 FPS	=	4.64	inWC			
	from eq. 5			Calgon Carbon data sheet, packed							
	H2S capacity in lbs/CF										
9	300	kg/m3	x	2.204	lbs/kg	/	35.3	ft/m3	=	18.73	lbs H2S/CF
	Calgon Carbon data sheet										
	Total theoretical bed capacity										
10	18.73	lbs H2S/CF	x	879	CF	=	16,463	lbs H2S			
	from eq. 9			from eq. 6							
	Calculate 50% holding capacity for breakthrough point										
11	16,463	lbs H2S	x	50%		=	8,231	lbs H2S			
	from eq. 10										
	Calculate hours to 50% saturation at highest avg. loading.										
	Assumes ionizers have no reduction.										
12	8,231	lbs H2S	/	1.41	lbs H2S/h	=	5,838	hours			
	from eq. 11			see loading table							
	Calculate hours to 50% saturation at predicted avg. loading.										
	Assumes ionizers are effective in reducing odorant levels by 75%										
13	8,231	lbs H2S	/	0.15	lbs H2S/h	=	54,876	hours			
	from eq. 12			see loading table			6.26	years			

Calculate blower total static pressure requirement

The building exhaust fans (W-034AB) and the ionization reactor blower (W-036) have enough SP capacity to deliver the primary air flow with slight positive pressure ahead of the carbon bed inlet. This can be controlled to between 0 and 1 inWC.

Confirm the expected pressure drop at the entrance to the carbon bed and through the center plenum area between the carbon beds.

Plenum area

14 | 24 inches (width between beds) | x | 106 inches (height) | = | 2544 in2 / 17.67 SF

Airflow velocity through plenum

15 | 42,120 CFM (from eq. 3) | / | 17.67 SF (from eq. 14) | = | 2,384 FPM / 40 FPS

16 Determine velocity pressure to estimate the entrance loss for turning the airflow
p[v] = (v/4005)^2 where v is in FPM and p[v] is in inWC
assume loss is equivalent to a flanged pipe

velocity pressure

17 (2,384 FPM (from eq. 15) / 4005) ^ 2 = 0.35 inWC

entrance loss, h[I,1]

18 | 0.35 inWC (from eq. 17) | x | 50% loss factor for flanged pipe | = | 0.18 inWC

ASHRAE hydraulic dia. for center plenum

D[e] = $1.3 \times (a \times b)^{0.625} / (a + b)^{0.25}$
a = 24 in
b = 106 in

19 d[e] = 51.7 in

Duct pressure loss through center plenum

$\Delta h = 0.109136\, q^{1.9} / d_e^{5.02}$ where Δh is the inWC loss per 100ft of duct

20 q = 42,120 CFM from eq. 3

21 d[e] = 51.7 in from eq. 19

22 h = 0.17 inWC per 100 ft of duct

L[eq] calculate total equivalent length including 90 deg. turn

23 | 30 ft (Length of the plenum area is 30-fe) | + | 100 ft (L[eq] for 90, assumed) | = | 130 ft

h[I,2]

24 | 0.17 inWC drop per 100-ft | x | 130 ft (from eq. 23) | / | 100 ft | = 0.22 inWC (expected loss in center plenum)

total loss from entrance of the carbon bed thru the plenum that W-036, W-034AB should overcome

25 | 0.18 h[I,1] from eq. 18 | + | 0.22 h[I,2] from eq. 24 | = | 0.39 inWC (expected total pressure loss prior to air entering the carbon bed from the outlet of W-036 duct)

Inlet side pressure losses for blower W-38

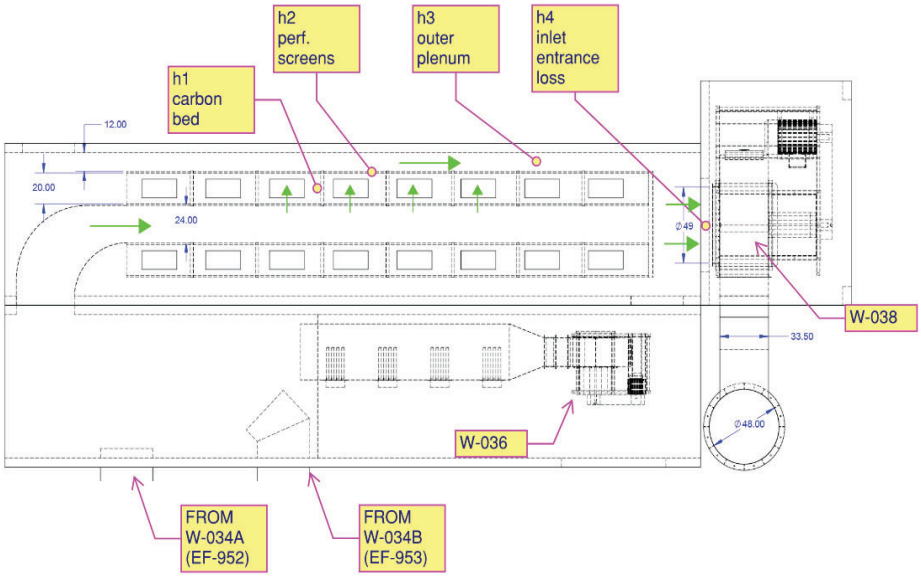

Calculate total head loss on the suction side of W-038
h[inlet] = h1 + h2 + h3 + h4
where
h1 - primary head loss from the air travel through the packed bed
h2 - friction head loss for the air passing through the perforated screens
h3 - friction head loss for the air through the outer plenum
h4 - entrance head loss to the blower

Determine pressure loss through outer plenum
ASHRAE hydraulic dia. for center plenum

	D[e]	=	$1.3 \times (a \times b)^{0.625} / (a+b)^{0.25}$	
	a	=	12	in
	b	=	106	in
25	d[e]	=	34.4	in

Duct pressure loss through outer plenum. Each side.
$\Delta h = 0.109136\, q^{1.9} / d_e^{5.02}$ where Δh is the inWC loss per 100ft of duct

Flow is assumed to split equally bewteen sides.

26	q	=	21,060	CFM	half of flow from eq. 3
27	d[e]	=	34.4	in	from eq. 25
28	h	=	0.35	inWC per 100 ft of duct	

L[eq] calculate total equivalent length including direction change

29	30	ft	+	93	ft	=	123	ft

Length of the plenum area is 30-fe L[eq] for direction change from end screen assumed as equal to loss for 36-in 90 ell

h3

30	0.35	x	123	ft	/	100	ft	=	0.43 inWC
	inWC drop per 100-ft		from eq. 29						expected loss in outer plenum

Determine pressure drop through perforated metal screens. Each side is screened with perforated metal that has 1/8-in holes on 3/16-in spacing with 40% open area. The perforated metal manufacturer handbook provides a chart below by open area and air velocity. The face velocity at the screens is less than 80 FPM (eq. 4). Per the graph below, it is apparent that losses for air speeds below 500 FPM are minor <0.1 inWC for screens with 40% or greater open area.

Accessed 10/15/21
http://www.iperf.org/files/6213/9267/1671/IPA_Perforated_Metals_Handbook.pdf

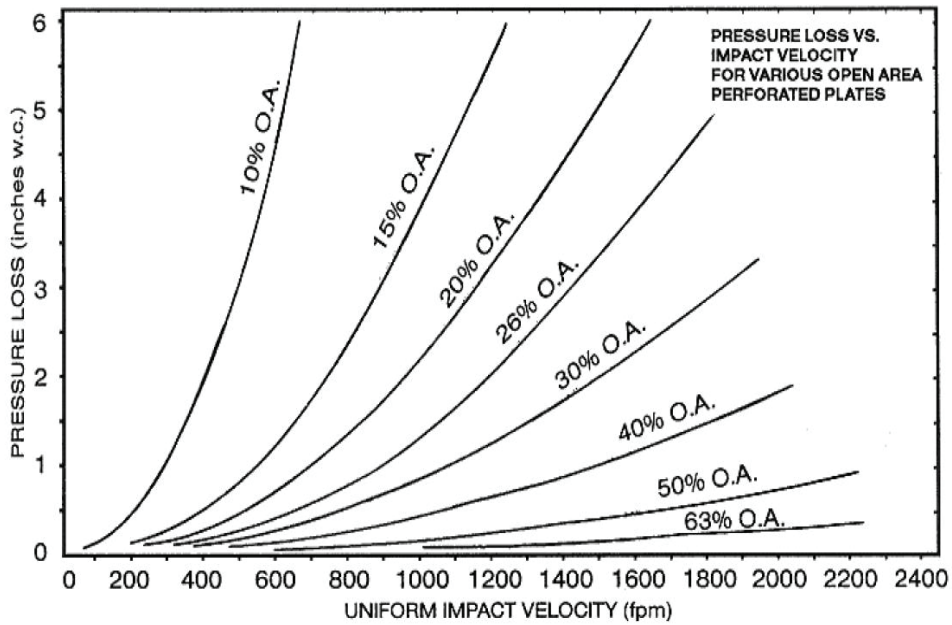

Expected loss through perf. Screens
Assume a loss for the air flow through two perf. Screen panels

31	h2			=	0.15	inWC				

inlet transition loss at blower
assume a flanged inlet without relief from the end of the container into the fan
a conservative entrance loss is 50% of the velocity pressure

p[v] = (v/4005)^2 where v is in FPM and p[v] is in inWC
the blower inlet is 48-inches

duct area

32	2	ft	^	2		x	3.14	=	12.56	ft2
	radius						(pi)			

fan inlet velocity

33	42,120	CFM	/	12.56	ft	=	3,354	FPM		
	from eq. 3			from eq. 32						

velocity pressure

34	(3,354	FPM	/	4005	)	^	2	=	0.70	inWC
	from eq. 33									

entrance loss, h4

35	0.70	inWC	x	50%	loss factor for flanged pipe	=	0.35	inWC		
	from eq. 34									

	h1	(carbon bed)	=	4.64	from eq. 8	assumes fouled condition
	h2	(perf. Screen)	=	0.15	from eq. 31	
	h3	(outer plenum)	=	0.43	from eq. 30	
	h4	(fan entrance)	=	0.35	from eq. 35	
			+			
36	h[inlet]			**5.57**	inWC	pressure loss to blower inlet W-038

Calculate Outlet Losses from Blower W-038

Calculate total head loss on the discharge side of W-038
h[outlet] = h5 + h6 + h7
h5 - outlet loss through 45 deg. transition in rectangular duct
h6 - friction loss through stack
h7 - stackhead loss

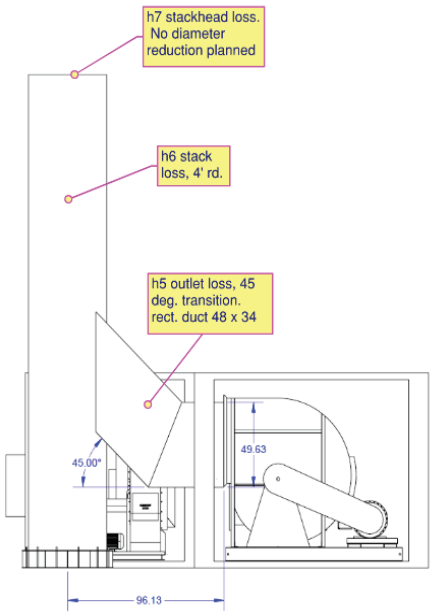

ASHRAE hydraulic dia. for outlet duct

	D[e]	=	$1.3 \times (a \times b)^{0.625} / (a + b)^{0.25}$		
	a	=	34	in	
	b	=	48	in	
37	d[e]	=	44.0	in	

Duct pressure loss through discharge.
$\Delta h = 0.109136\, q^{1.9} / d_e^{5.02}$ where Δh is the inWC loss per 100ft of duct

Flow is assumed to split equally bewteen sides.

38	q	=	42,120	CFM	from eq. 3
39	d[e]	=	44.0	in	from eq. 37
40	h	=	0.38	inWC per 100 ft of duct	

L[eq] calculate total equivalent length including direction change

41	12	ft	+	105	ft	=	117	ft

Assume total lg of 12' to stack and use eq. lg for a 40-in rd duct 90 with a 1.5R turn.

h5

42	0.38		x	117	ft	/	100	ft	= 0.44 inWC
	inWC drop per 100-ft			from eq. 41					expected loss from blower outlet into the stack

Loss in 48-inch stack

43	h	=	0.24	inWC per 100 ft of 48-in round duct	

h6

44	0.24		x	30	ft	/	100	ft	= 0.07 inWC
	inWC drop per 100-ft								expected loss from blower outlet into the stack

h7 - stackhead loss = velocity pressure for a 48-inch round duct

45	0.70	inWC
	calculated above, see eq. 34	

	h5 (outlet loss)	=	0.44	from eq. 42
	h6 (stack)	=	0.07	from eq. 44
	h7 (stack head)	=	0.70	from eq. 45
		+		
46	h[outlet]	=	1.21	inWC

	h[total]							
	inlet loss			outlet loss				
47	5.57	inWC	+	1.21	inWC	=	6.78	inWC
	from eq. 36			from eq. 46				

Blower W-038 has sufficient HP to produce up to 12 inWC at the flowrate of 42,000 CFM. The blower motor will be powered by a variable frequency drive and will allow the impeller speed to be modulated to meet the flow requirement. This provides a wide operating band for changing system conditions and maintains good power efficiency.

ODOR CONTROL (MP-08) APPENDIX C
REFERENCE DRAWINGS

Appendix C: ODOR CONTROL PLAN

Reference Drawings

Prepared By
Green Arrow Engineering
2759 Long Road
Wooster, OH 44691

REVISION LEVEL	DESCRIPTION	ISSUE DATE
R0	INITIAL RELEASE	10/19/21

Process Flow and Mass Balance	
Ventilation and odor control	1512-0500-001
Ionization Reactor and Carbon Bed	1512-0500-002

Process and Instrumentation Drawings (P&IDs)	
Process HVAC MAUs	1512-1030-001
Process HVAC Building Ionizers	1512-1032-001
Process HVAC Exhaust Blowers	1512-1034-001
Process HVAC Exhaust Ionizers (Ionization Reactor)	1512-1036-001
Process HVAC Carbon Bed	1512-1038-001

Base building mechanical drawings	
HVAC Notes and Specs (general)	M-700
HVAC Notes and Specs (piping)	M-702
HVAC Notes and Specs (piping)	M-703
HVAC Notes and Specs (equipment)	M-704
HVAC Notes and Specs (equipment)	M-705
HVAC Notes and Specs (equipment)	M-706
HVAC Schedules	M-710
HVAC Schedules	M-711
Building Ventilation Schematic	M-720
HVAC Equipment Locations	M-800
Duct Plan – Center Rooms	M-811
Duct Plan – Mechanical Room and Elec. Rm 2	M-812
Duct Plan – Process Area	M-813
HVAC Elevations	M-820
HVAC Elevations	M-821

VENTILATED AREA	Air pretreated with ionizers	FLOW RATE	NH3			H2S		
		SCFM	*PPMV*	*mg/m3*	*LBS/HR*	*PPMV*	*mg/m3*	*LBS/HR*
FEEDSTOCK RECEIVING AREA	Yes	16,500	9	6.4	0.396	4	5.7	0.352
SEPARATION MILL & GRIT TANK	No	1,000	10	7.1	0.027	10	14.2	0.053
LIQUID RECEIVING TANKS	No	1,000	10	7.1	0.027	20	28.5	0.107
SCREENED DIGESTATE TANKS	No	500	100	71.3	0.134	30	42.7	0.080
DEWATERING AREA	Yes	17,750	16	11.4	0.758	8	11.4	0.757
FILTRATE TANKS	No	1,250	10	7.1	0.033	10	14.2	0.067
SCRUBBER TOTAL INLET	**untreated**	38,000	13.6	9.7	1.38	6.987	9.9	1.41
CARBON BED INLET W/DIULTION		42,120	12.2	8.7	1.38	6.303	9.0	1.41

			PPMV	*mg/m3*	*LBS/HR*	*PPMV*	*mg/m3*	*LBS/HR*
PRETREATED lbs/h					1.15			1.11
UNTREATED lbs/h					0.220			0.306
AFTER 75% REDUCTION	75%				0.29			0.28
TOTAL TO IONIZER CANON		42,120	4.5	3.2	0.51	2.6	3.7	0.58
CARBON BED INLET		42,120	1.1	0.8	0.13	0.6	0.9	0.15
CARBON BED OUTLET	99.0%	42,120	0.011	0.01	0.0013	0.006	0.01	0.0015

Building volume

L	275	ft
W	125	ft
H	40	ft
V	1,375,000	FT3
Exhaust flow rate	38,000	CFM
Exhaust flow rate	2,280,000	CFH
Air Changes per hour	1.7	ACH

NOTES:

1. THIS IS A NEW FACILITY AND ODORANT CONCENTRATIONS ARE ESTIMATED. AMMONIA AND H2S WILL PRIMARILY OFF-GAS FROM THE DIGESTED SLUDGE AND BE PRESENT FROM THE DEWATERING OPERATIONS. AMMONIA AND H2S ARE USED AS THE INDICATOR GASES, BUT VARIOUS VOCS WILL ALSO BE PRESENT FROM FOOD WASTE HANDLING WITHIN THE FACILITY. THE VOCS WILL HAVE ODORS CHARACTERIZED AS SOUR, RANCID, YEASTY, FRUITY, AND/OR GRASSY ON A STANDARD ODOR WHEEL. THE VOC ODORS WILL BE CONCENTRATED AROUND THE FOOD WASTE RECEIVING BIN.
2. IONIZERS IN THE BUILDING ARE EXPECTED TO REDUCE ODORANT CONCENTRATIONS BY 75%, AS COMPARED WITH NO TREATMENT.
3. PROCESS EQUIPMENT AND BELOW-SLAB CONCRETE TANKS ARE DIRECTLY VENTED TO THE SCRUBBER PICK-UP DUCTS. IONIZED AIR FROM THE ROOM WILL PROVIDE MAKEUP AIR TO THE PROCESS EQUIPMENT AND TRANSFER TANKS, BUT NO REDUCTION IN ODOR CONCENTRATION FROM THE IONIZED MAKEUP AIR IS ASSUMED AS THE IONS WILL LIKELY HAVE LOST THEIR CHARGE PRIOR TO ENTERING THE PROCESS EQUIPMENT.
4. THE TWO PROCESSING FLOOR EXHASUT FANS DISCHARGE TO A MIXING PLENUM UPSTREAM OF AN ACTIVATED CARBON GUARD BED. THE EXHAUST FANS WILL TYPICALLY BOTH OPERATE AT 19,000 CFM EACH AND ARE SPEED CONTROLLED ON A VFD. IF ONLY DEWATERING OPERATIONS ARE OCCURING OR ONLY FEEDSTOCK PROCESSING, ONE EXHAUST MAY BE IDLED WHILE THE OTHER IS RAMPED UP TO FULL DESIGN CAPACITY. THE MAKE-UP AIR UNITS WILL BE CONTROLLED TO MAINTAIN A NEG. PRESSURE IN THE BUILDING BETWEEN -0.08 and -0.1 inWC. EACH MAU HAS THE CAPACITY (30,000 CFM) TO PROVIDE SUFFICIENT MAKE-UP AIR FOR BOTH EXHAUST FANS. THE PLANT OPERATIONS MAY CHOOSE TO ALTERNATE OPERATION OF THE MAUS OR RUN BOTH AT REDUCED FLOW AS INDICATED ON THE FLOW DIAGRAM. BOTH MAUS ARE SPEED CONTROLLED WITH A VFD. AFTER LEAVING THE BUILDING, THE EXHAUST AIR IS DUCTED TO AN IONIZATION REACTOR AND CARBON GUARD BED.
5. A 4,120 CFM BLOWER WILL SUPPLY OUTSIDE AIR ACROSS AN IONIZER REACTOR BANK THAT WILL COMBINE WITH THE 38,000 CFM OF ODOROUS AIR TO PROVIDE TERTIARY TREATMENT. THE ODORANT LEVELS ARE EXPECTED TO BE REDUCED BY ANOTHER 75% WITHIN THIS MIXING PLENUM. THE IONIZERS ARE SIZED TO HAVE FULLY TREATED THE AIR BY THIS STAGE. BUT THESE ARE FOLLOWED BY A CARBON GUARD BED FOR SURETY.
6. THE 42,120 CFM OF TREATED AIR WILL BE PULLED THROUGH AN ACTIVATED CARBON GUARD BED THAT WILL FURTHER REDUCE ODORANT LEVELS BY 99%. THE CARBON GUARD BED WILL BE UNDER SLIGHT NEGATIVE PRESSURE.
7. A MAIN EXHAUST BLOWER WILL PULL THE AIR THROUGH THE CARBON BED AND EXHUAST THE TREATED AIR TO A STACK.
8. IF THE IONIZERS ARE INOPERABLE FOR ANY PERIOD OF TIME, THE CARBON GUARD BED WILL BE RELIED ON TO REDUCE ALL ODORANT LEVELS.
9. THE CARBON GUARD BED WILL HAVE CAPACITY FOR 32 CY OF MEDIA, A BED DEPTH OF 20-INCHES (0.5 M) AND A CONTACT TIME OF 1.25 SECONDS.
10. THE CARBON GUARD BED WILL BE REGENEARTED (VOCS WILL BE OXIDIZED) BY THE IONIZED AIR DURING PERIODS OF LOW ODORANT LOADING FROM THE BUILDING. LOWER ODOR LEVELS ARE EXPECTED DURING OFF-SHIFT HOURS WHEN FEEDSTOCK HANDLING AND/OR DEWATERING OPERATIONS ARE NOT RUNNING. HYDROGEN SULFIDE WILL NOT BE REMOVED FROM THE CARBON BED AFTER CAPTURE SINCE IT IS CHEMICALLY BONDED WITH THE IMPREGENATED CARBON. IF THE IONIZERS DO NOT PROVIDE ANY REDUCTION IN THE H2S LEVELS, THE CARBON GUARD BED WILL REACH 50% OF ITS H2S HOLDING CACPAITY IN ABOUT 5500 HOURS. IF THE IONIZERS EFFECTIVELY REDUCE THE H2S LOADING AHEAD OF THE CARBON BED AS PREDICTED, THE CARBON BED WILL TAKE OVER 54,000 HOURS (6-YEARS) TO REACH 50% SATURATION. ACTIVATED CARBON BEDS ARE USED BY WASTEWATER TREATMENT PLANTS FOR PRIMARY ODOR CONTROL IN MANY INSTALLATIONS FOR BOTH HEADWORKS AND DEWATERING ODORS.
11. THE ACTIVATED CARBON BLEND SHALL BE SPECIFIED TO SCAVENGE HYDROGEN SULFIDE, AMMONIA, AND VOCs.

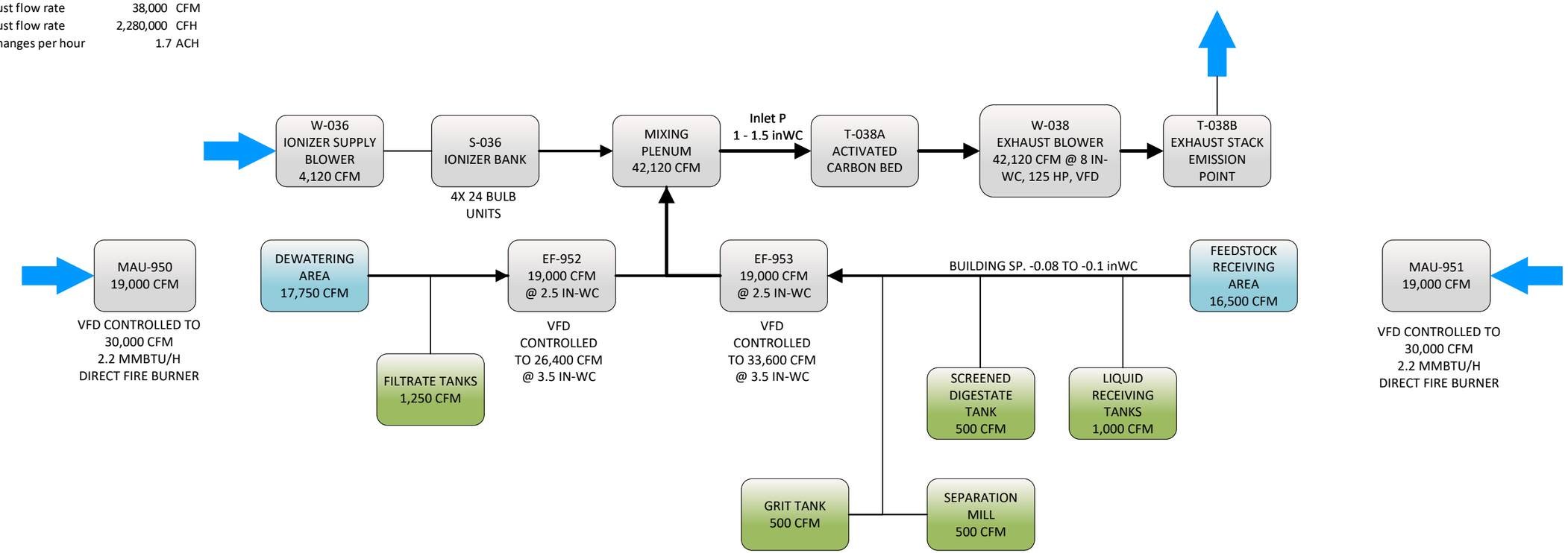

NO.	DATE
BY	
REVISION	
NO.	DATE
BY	
REVISION	
NO. A	DATE 10/15/21
BY NMAST	
REVISION REVISED FLOW RATES FOR CARBON BED	

GREEN ARROW

1680 MADISON AVENUE
WOOSTER, OH 44691

This drawing contains valuable confidential and proprietary information that belongs to Green Arrow ("GA"), and is subject to a Confidentiality and Nondisclosure Agreement. GA is the author and owner of this drawing, and retains all common law, statutory and other rights and privileges with respect hereto, including copyrights. The information contained herein may not at any time be used for any unauthorized purpose, nor reproduced by or provided to any third party, without the prior written consent of GA.

© 2017, Green Arrow.
All rights reserved.

VENTILATION AND ODOR CONTROL

AREA	CHECKED BY CH
JOB NO. 1512	DRAWN BY NM
SCALE N.T.S.	DATE 07/19/2021
DWG NO. 0500-001	
SHEET NO. 1	

C:\Users\nmast\Google Drive\Green Arrow\02 Projects\1512 Chicago - Feldman - Green Era\07 Drawings\01 PFD\

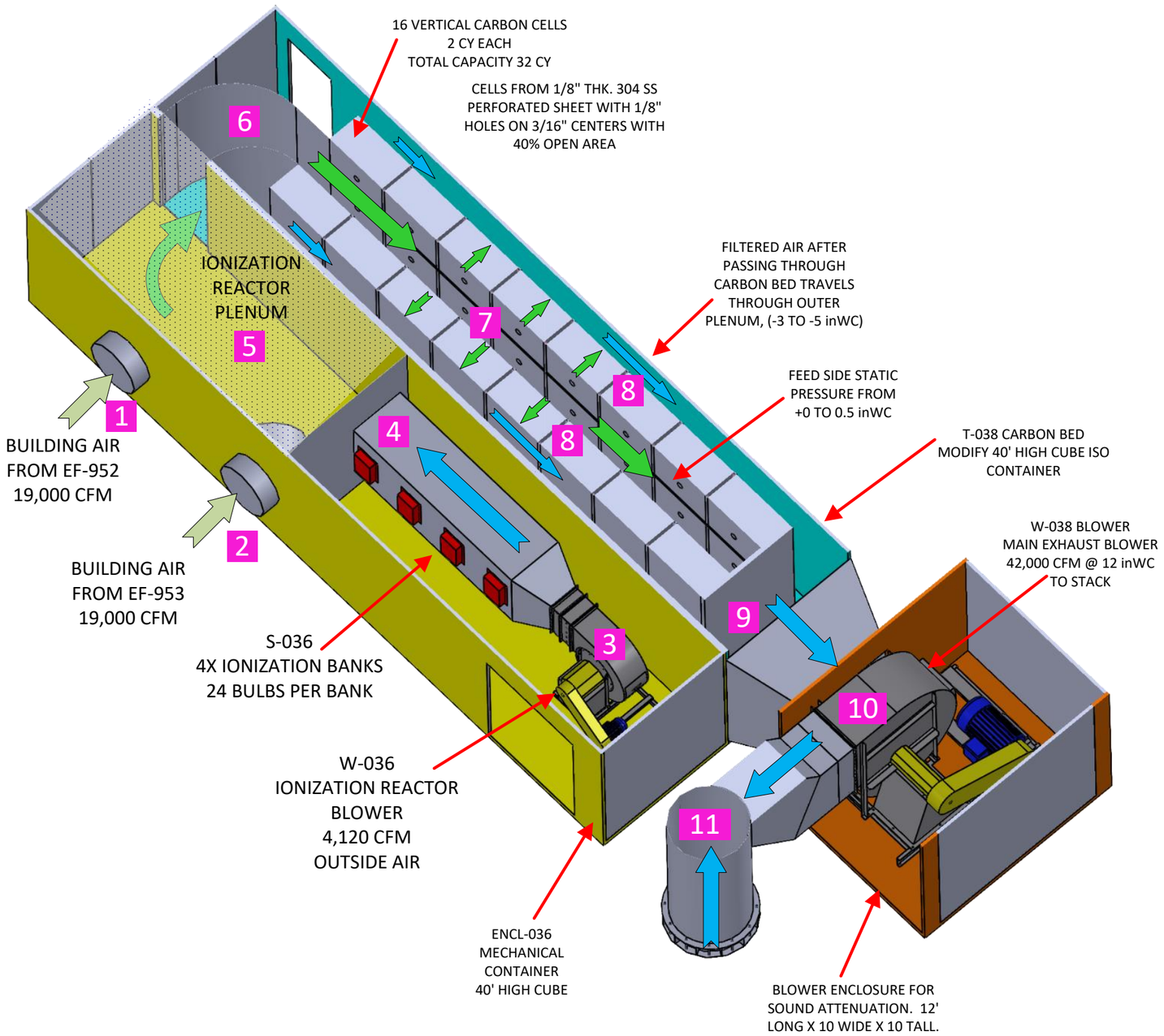

VIEW IS SECTIONED TO REMOVE CONTAINER ROOFS

NOTES

1. INLET DUCT FROM EF-952, W-034A, FROM DEWATERING AREA OF THE OPERATIONS BUILDING. BLOWER SPEED IS CONTROLED WITH A VFD.
2. INLET DUCT FROM EF-953, W-034B, FROM FEEDSTOCK PROCESSING AREA OF THE OPERATIONS BUILDING. BLOWER SPEED IS CONTROLED WITH A VFD.
3. BLOWER W-036, OUTDOOR AIR TO SUPPLY THE IONIZATION REACTOR (4120 CFM). BLOWER SPEED IS CONTROLED WITH A VFD.
4. IONIZER DUCT BANK. FOUR 24-BULB FIXTURES AND INTEGRATED POWER SUPPLIES. S-036.
5. PLENUM U-038, IONIZATION CONTACTOR FOR MIXING THE ODOROUS AIR FROM THE BUILDING WITH THE CHARGED AIR FROM W-036.
6. INLET TRANSITION PLENUM TO CARBON BED.
7. CENTER SUPPLY PLUNUM TO CARBON BED. STATIC PRESSURE RANGE FROM +0 TO +0.5 inWC.
8. VERTICAL DEEP CELL CARBON BED. 16 CELLS, EACH CELL HOLDS 2 CUBIC YARDS OF ACTIVATED CARBON. CARBON WILL BE PELLETIZED, 4MM STD. SIZE. BED DEPTH 20 INCHES (0.5M). NOMINAL EMPTY BED CONTACT TIME IS 1.25 SECONDS. CARBON CHANGE OUT FROM TOP ACCESS HATCHES.
9. SCRUBBED AIR EXITS BED AND TRAVELS ALONG OUTER PLENUM TO END OF THE CONTAINER TOWARD BLOWER INLET. NEGATIVE PRESSURE RANGE FROM -3 TO -5 inWC.
10. 42,000 CFM OF AIR ENTERS BLOWER W-038. W-038 HAS SUFFICIENT HP TO MAKE 12 inWC AT RATED FLOW. BLOWER SPEED IS CONTROLED WITH A VFD.
11. EXHAUST STACK WITH SILENCER TO ENVIRONMENT. H2S READING WILL BE MADE AT THE EXHAUST STACK TO MONITOR FOR BED BREAKTHROUGH.

NO.	DATE
BY	
REVISION	
NO.	DATE
BY	
REVISION	
NO.	DATE
BY	
REVISION	

GREEN ARROW

1680 MADISON AVENUE
WOOSTER, OH 44691

This drawing contains valuable confidential and proprietary information that belongs to Green Arrow ("GA"), and is subject to a Confidentiality and Nondisclosure Agreement. GA is the author and owner of this drawing, and retains all common law, statutory and other rights and privileges with respect hereto, including copyrights. The information contained herein may not at any time be used for any unauthorized purpose, nor reproduced by or provided to any third party, without the prior written consent of GA.

© 2017, Green Arrow.
All rights reserved.

IONIZATION REACTOR AND CARBON BED

AREA	CHECKED BY
	CH
JOB NO.	DRAWN BY
1512	NM
SCALE	DATE
N.T.S.	10/19/21

DWG NO. 0500-002

SHEET NO. 2

C:\Users\nmast\Google Drive\Green Arrow\02 Projects\1512 Chicago - Feldman - Green Era\07 Drawings\01 PFD\

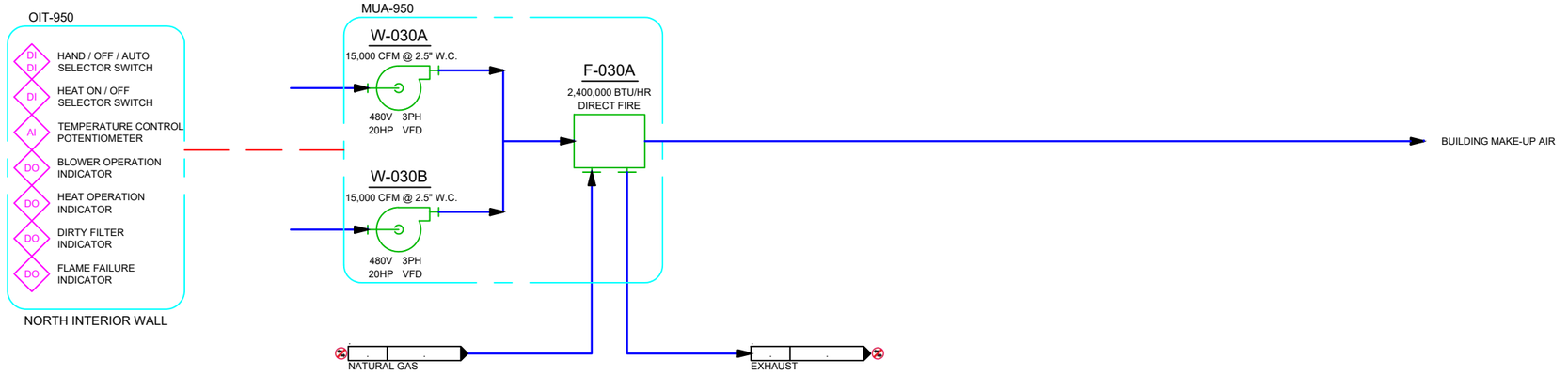

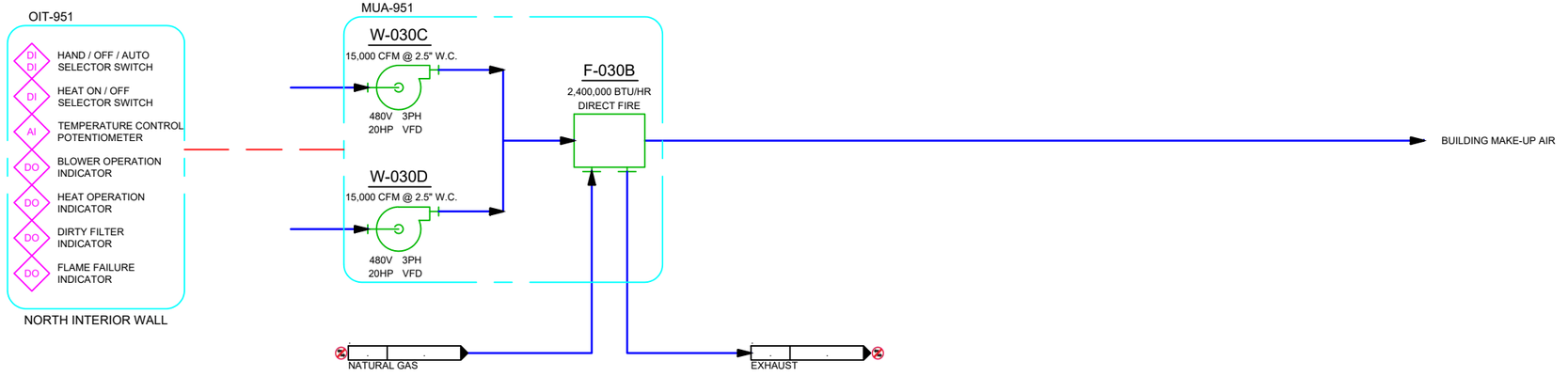

GENERAL NOTES:
1.

WIRING NOTES:
1. MUA-950/951 POWER FROM CIRCUIT BREAKER BUCKETS IN MCC-HVAC.
2. EACH MUA INCLUDES A SINGLE VFD SHARED BY BOTH BLOWERS, LOCATED AT THE MUA.
3. EACH MUA INCLUDES A REMOTE CONTROL PANEL.

NO.	DATE
BY	
REVISION	

NO.	DATE
BY	
REVISION	

ACEng
ADAMS & CHRISTENSEN ENGINEERING, INC.
782 WEXFORD CT.
GRAYSLAKE, ILLINOIS 60030

GREEN ARROW
2759 LONG ROAD
WOOSTER, OH 44691

THIS DRAWING CONTAINS VALUABLE CONFIDENTIAL AND PROPRIETARY INFORMATION THAT BELONGS TO GREEN ARROW ("GA"), AND IS SUBJECT TO A CONFIDENTIALITY AND NONDISCLOSURE AGREEMENT. GA IS THE AUTHOR AND OWNER OF THIS DRAWING, AND RETAINS ALL COMMON LAW, STATUTORY AND OTHER RIGHTS AND PRIVILEGES WITH RESPECT HERETO, INCLUDING COPYRIGHTS. THE INFORMATION CONTAINED HEREIN MAY NOT AT ANY TIME BE USED FOR ANY UNAUTHORIZED PURPOSE, NOR REPRODUCED BY OR PROVIDED TO ANY THIRD PARTY, WITHOUT THE PRIOR WRITTEN CONSENT OF GAE.

©2017, GREEN ARROW
ALL RIGHTS RESERVED.

Process HVAC Intake

Green Era
650 WEST 83rd ST
CHICAGO, IL 60620

AREA	CHECKED BY
030	
JOB NO.	DRAWN BY
1512	CY
SCALE	DATE
	9/10/2018
DWG NO.	
1030-001	
SHEET NO.	
001	

G:\My Drive\Green Arrow\02 Projects\1512 Chicago – Feldman – Green Era\07 Drawings\02 P&ID\1512 Green Era 2020\PID DWG\1512-1030-001-Process HVAC Intake.dwg

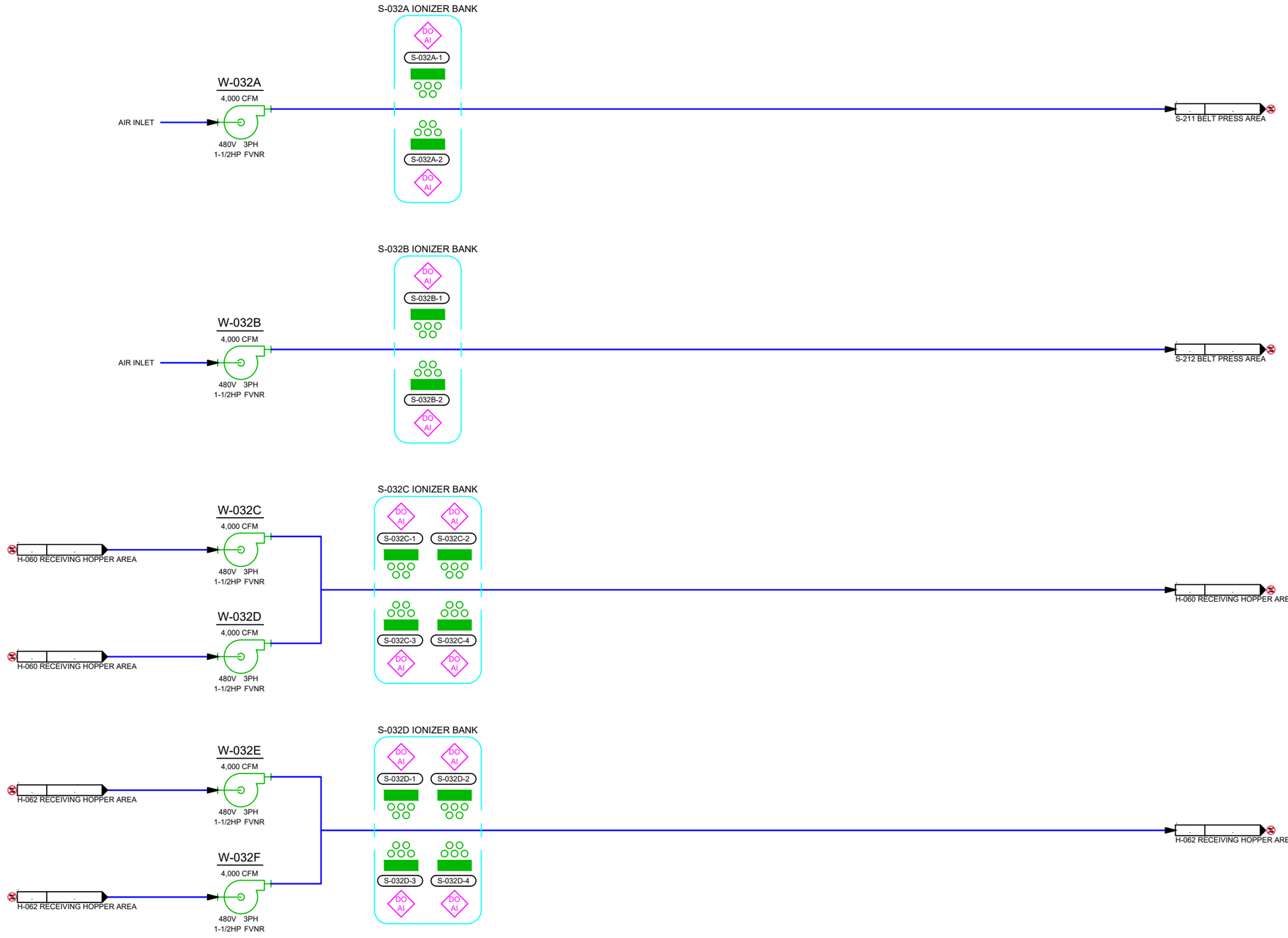

GENERAL NOTES:
1.

WIRING NOTES:
1. W-032A/B/C/D MOTOR WIRING TO MCC-1A.
2. W-032E/F MOTOR WIRING TO MCC-2A.

NO.	DATE
BY	
REVISION	

NO.	DATE
BY	
REVISION	

ADAMS & CHRISTENSEN
ENGINEERING, INC.
782 WEXFORD CT.
GRAYSLAKE, ILLINOIS 60030

GREEN ARROW

2759 LONG ROAD
WOOSTER, OH 44691

THIS DRAWING CONTAINS VALUABLE CONFIDENTIAL AND PROPRIETARY INFORMATION THAT BELONGS TO GREEN ARROW ("GA"), AND IS SUBJECT TO A CONFIDENTIALITY AND NONDISCLOSURE AGREEMENT. GA IS THE AUTHOR AND OWNER OF THIS DRAWING, AND RETAINS ALL COMMON LAW, STATUTORY AND OTHER RIGHTS AND PRIVILEGES WITH RESPECT HERETO, INCLUDING COPYRIGHTS. THE INFORMATION CONTAINED HEREIN MAY NOT AT ANY TIME BE USED FOR ANY UNAUTHORIZED PURPOSE, NOR REPRODUCED BY OR PROVIDED TO ANY THIRD PARTY, WITHOUT THE PRIOR WRITTEN CONSENT OF GAE.

©2017, GREEN ARROW

ALL RIGHTS RESERVED.

Process HVAC Building Ionizers

Green Era
650 WEST 83rd ST
CHICAGO, IL 60620

AREA	CHECKED BY
032	
JOB NO.	DRAWN BY
1512	CY
SCALE	DATE
	9/10/2018

DWG NO.
1032-001

SHEET NO.
001

G:\My Drive\Green Arrow\02 Projects\1512 Chicago – Feldman – Green Era\07 Drawings\02 P&ID\1512 Green Era 2020\PID DWG\1512-1032-001-Process HVAC Building Ionizers.dwg

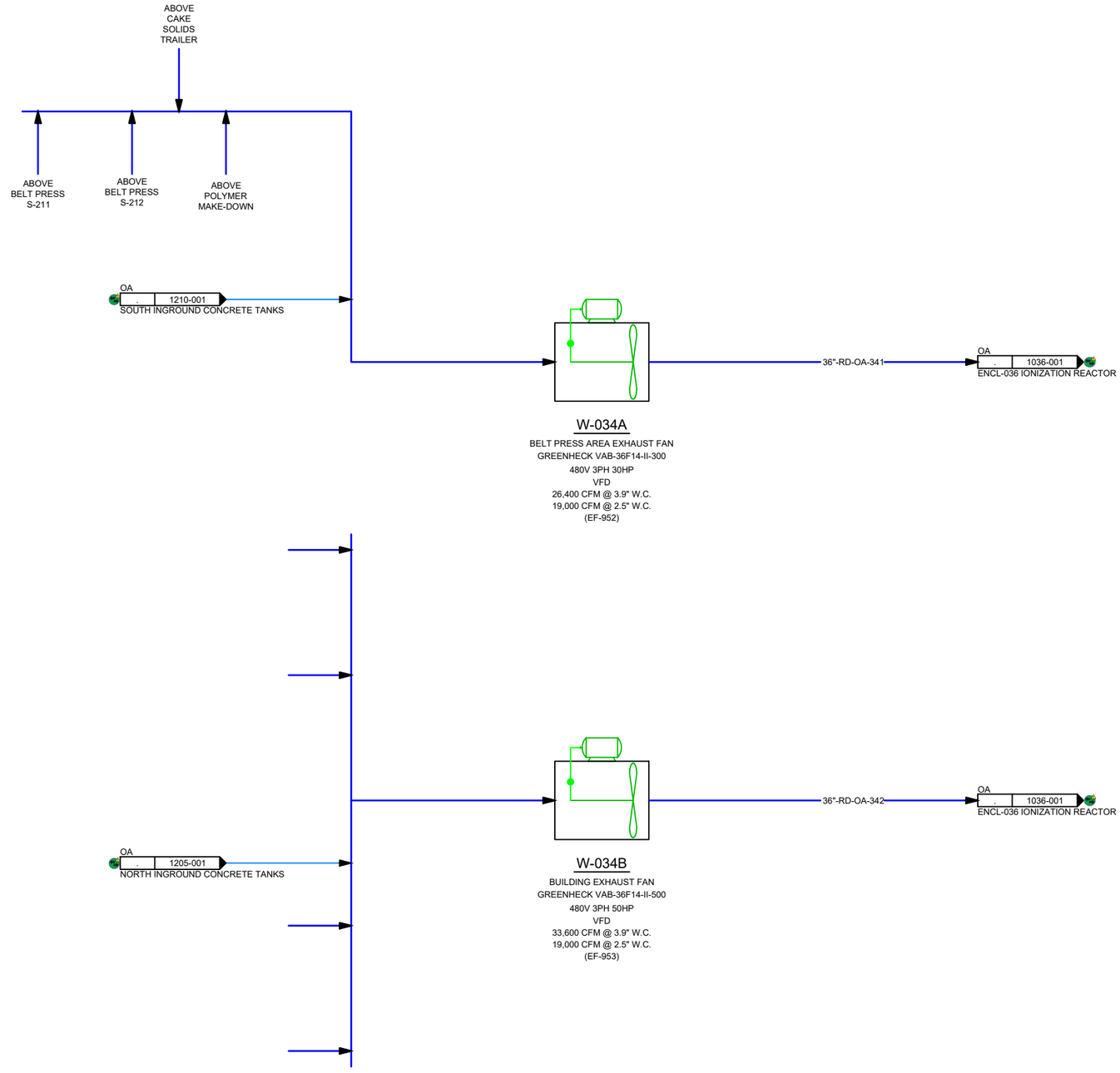

GENERAL NOTES:
1.

WIRING NOTES:
1. MOTOR WIRING TO MCC-HVAC

NO.	DATE
BY	
REVISION	

NO.	DATE
BY	
REVISION	

ACEng
ADAMS & CHRISTENSEN ENGINEERING, INC.
782 WEXFORD CT.
GRAYSLAKE, ILLINOIS 60030

GREEN ARROW
2759 LONG ROAD
WOOSTER, OH 44691

THIS DRAWING CONTAINS VALUABLE CONFIDENTIAL AND PROPRIETARY INFORMATION THAT BELONGS TO GREEN ARROW ("GA"), AND IS SUBJECT TO A CONFIDENTIALITY AND NONDISCLOSURE AGREEMENT. GA IS THE AUTHOR AND OWNER OF THIS DRAWING, AND RETAINS ALL COMMON LAW, STATUTORY AND OTHER RIGHTS AND PRIVILEGES WITH RESPECT HERETO, INCLUDING COPYRIGHTS. THE INFORMATION CONTAINED HEREIN MAY NOT AT ANY TIME BE USED FOR ANY UNAUTHORIZED PURPOSE, NOR REPRODUCED BY OR PROVIDED TO ANY THIRD PARTY, WITHOUT THE PRIOR WRITTEN CONSENT OF GAE.

©2017, GREEN ARROW
ALL RIGHTS RESERVED.

Process HVAC Exhaust

Green Era
650 WEST 83rd ST
CHICAGO, IL 60620

AREA	CHECKED BY
034	
JOB NO.	DRAWN BY
1512	CY
SCALE	DATE
	9/10/2018

DWG NO.
1034-001

SHEET NO.
001

G:\My Drive\Green Arrow\02 Projects\1512 Chicago – Feldman – Green Era\07 Drawings\02 P&ID\1512 Green Era 2020\PID DWG\1512-1034-001-Process HVAC Exhaust.dwg

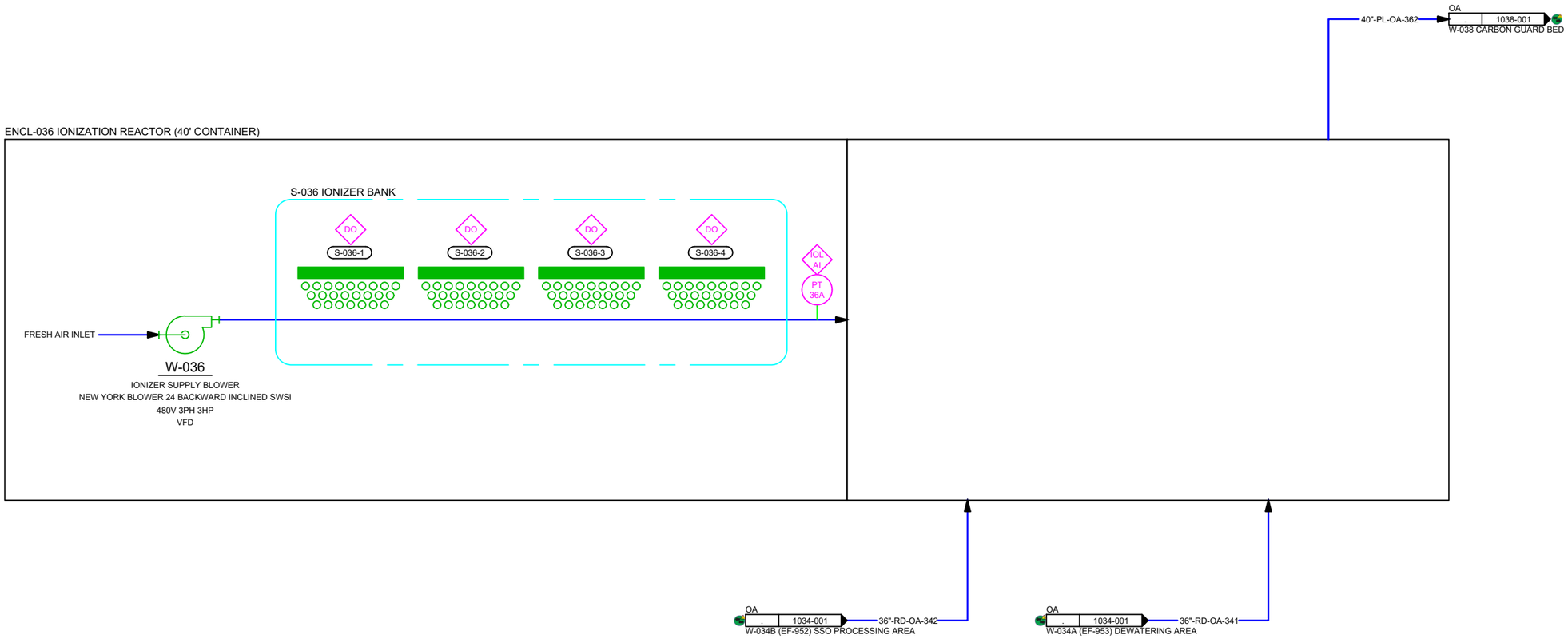

GENERAL NOTES:
1. EACH IONIZER IS POPULATED WITH 24 BULBS PER BANK.

WIRING NOTES:
1. ALL INSTRUMENTATION WIRING TO REMOTE I/O CABINET IOP-020
2. W-036 MOTOR WIRING TO MCC-2A

NO.	DATE
BY	
REVISION	

NO.	DATE
BY	
REVISION	

ADAMS & CHRISTENSEN
ENGINEERING, INC.
782 WEXFORD CT.
GRAYSLAKE, ILLINOIS 60030

GREEN ARROW

2759 LONG ROAD
WOOSTER, OH 44691

THIS DRAWING CONTAINS VALUABLE CONFIDENTIAL AND PROPRIETARY INFORMATION THAT BELONGS TO GREEN ARROW ("GA"), AND IS SUBJECT TO A CONFIDENTIALITY AND NONDISCLOSURE AGREEMENT. GA IS THE AUTHOR AND OWNER OF THIS DRAWING, AND RETAINS ALL COMMON LAW, STATUTORY AND OTHER RIGHTS AND PRIVILEGES WITH RESPECT HERETO, INCLUDING COPYRIGHTS. THE INFORMATION CONTAINED HEREIN MAY NOT AT ANY TIME BE USED FOR ANY UNAUTHORIZED PURPOSE, NOR REPRODUCED BY OR PROVIDED TO ANY THIRD PARTY, WITHOUT THE PRIOR WRITTEN CONSENT OF GAE.

©2017, GREEN ARROW
ALL RIGHTS RESERVED.

Process HVAC Exhaust
Ionizers

Green Era
650 WEST 83rd ST
CHICAGO, IL 60620

AREA	CHECKED BY
036	
JOB NO.	DRAWN BY
1512	CY
SCALE	DATE
	11/19/2018

DWG NO.
1036-001

SHEET NO.
001

G:\My Drive\Green Arrow\02 Projects\1512 Chicago – Feldman – Green Era\07 Drawings\02 P&ID\1512 Green Era 2020\PID DWG\1512-1036-001-Process HVAC Exhaust Ionizers.dwg

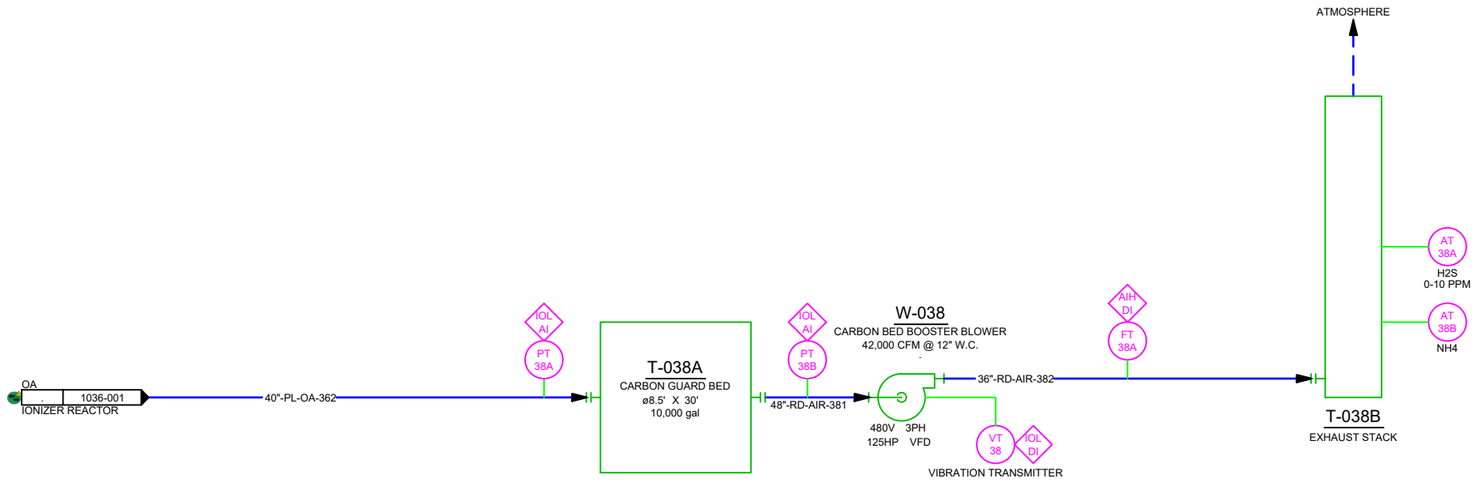

GENERAL NOTES:
1. ALL EQUIPMENT ON THIS SHEET WILL BE OUTDOORS.

WIRING NOTES:
1. ALL INSTRUMENTATION WIRING TO REMOTE I/O CABINET IOP-020
2. W-038 MOTOR WIRING TO STAND-ALONE VFD ENCLOSURE IN ELECTRICAL ROOM #124

NO.	DATE
BY	
REVISION	

NO.	DATE
BY	
REVISION	

ACEng

ADAMS & CHRISTENSEN
ENGINEERING, INC.
782 WEXFORD CT.
GRAYSLAKE, ILLINOIS 60030

GREEN ARROW

2759 LONG ROAD
WOOSTER, OH 44691

THIS DRAWING CONTAINS VALUABLE CONFIDENTIAL AND PROPRIETARY INFORMATION THAT BELONGS TO GREEN ARROW ("GA"), AND IS SUBJECT TO A CONFIDENTIALITY AND NONDISCLOSURE AGREEMENT. GA IS THE AUTHOR AND OWNER OF THIS DRAWING, AND RETAINS ALL COMMON LAW, STATUTORY AND OTHER RIGHTS AND PRIVILEGES WITH RESPECT HERETO, INCLUDING COPYRIGHTS. THE INFORMATION CONTAINED HEREIN MAY NOT AT ANY TIME BE USED FOR ANY UNAUTHORIZED PURPOSE, NOR REPRODUCED BY OR PROVIDED TO ANY THIRD PARTY, WITHOUT THE PRIOR WRITTEN CONSENT OF GAE.

©2017, GREEN ARROW

ALL RIGHTS RESERVED.

Process HVAC Carbon Bed

Green Era
650 WEST 83rd ST
CHICAGO, IL 60620

AREA	CHECKED BY
038	
JOB NO.	DRAWN BY
1512	CY
SCALE	DATE
	9/10/2018

DWG NO.
1038-001

SHEET NO.
001

G:\My Drive\Green Arrow\02 Projects\1512 Chicago – Feldman – Green Era\07 Drawings\02 P&ID\1512 Green Era 2020\PID DWG\1512-1038-001-Process HVAC Carbon Bed.dwg

1.1 PROJECT SUMMARY

A. PROJECT NAME: ANAEROBIC DIGESTION FACILITY
B. OWNER: GREEN ERA EDUCATIONAL NFP, GREEN ERA SUSTAINABILITY, LLC
C. SITE: CHICAGO, ILLINOIS
D. ADDRESS: 650 W. 83RD STREET, CHICAGO, IL 60620

1.2 GENERAL REQUIREMENTS

A. PERFORM ALL WORK IN ACCORDANCE WITH APPLICABLE FEDERAL, STATE, LOCAL CODES AND ORDINANCES, AND OWNER WORK AND SAFETY PROCEDURES AND REQUIREMENTS.
B. ALL MATERIALS AND EQUIPMENT TO BE PROVIDED AS PART OF THIS PROJECT TO INCLUDE CERTIFICATION DOCUMENTATION (EG., UL 508A) REQUIRED BY APPLICABLE CODES AND ORDINANCES FOR INSTALLATION AND OPERATION OF SAID MATERIALS/EQUIPMENT AS INTENDED IN THIS PROJECT.
C. THE CONTRACTOR SHALL BE RESPONSIBLE FOR UNLOADING, RIGGING, SETTING, ANCHORING, ADJUSTMENT, CONNECTION, INSTALLATION AND START-UP OF ALL EQUIPMENT IN ACCORDANCE WITH MANUFACTURER'S INSTRUCTIONS.
D. IT IS THE RESPONSIBILITY OF THE CONTRACTOR TO ENSURE THAT THIS DRAWING SET HAS BEEN ISSUED/RELEASED FOR CONSTRUCTION PRIOR TO PURCHASING EQUIPMENT OR MATERIALS AND COMMENCING CONSTRUCTION. RELEASE FOR CONSTRUCTION WILL BE INDICATED IN THE REVISION SECTION OF TITLE BLOCKS OF EACH SHEET. REVISION 0 WILL STATE "ISSUED FOR CONSTRUCTION".
E. THE DRAWINGS DO NOT ATTEMPT TO SHOW EXACT DETAILS OF ALL PIPING, EQUIPMENT AND STRUCTURES. LOCAL OBSTRUCTIONS, VARIATIONS IN EQUIPMENT CONNECTION LOCATIONS AND TOLERANCES, VARIANCES IN EQUIPMENT LOCATIONS, AND VARIATIONS IN VALVE AND IN-LINE COMPONENT DIMENSIONS THAT REQUIRE ADJUSTMENTS MAY BE ENCOUNTERED. ALL MEASUREMENTS AND DIMENSIONS SHALL BE VERIFIED ON SITE.
F. NO MECHANICAL EQUIPMENT SHALL BE LOCATED OVER ELECTRICAL EQUIPMENT UNLESS SPECIFICALLY SHOWN ON DRAWINGS.
G. HIGH PRESSURE SPRAY WASH ALL COOLING AND HEATING COILS TO REMOVE ALGAE, OIL, FILM, DUST ETC. PRIOR TO COMMISSIONING. USE SITE-APPROVED CHEMICALS AS REQUIRED TO PROVIDE COMPLETE CLEANING.
H. WALL THERMOSTATS TO BE INSTALLED 4'-0" ABOVE FINISHED FLOOR IN CONDITIONED SPACES AND 5'-0" IN PROCESS AND IAC ROOMS UNLESS SPECIFICALLY SHOWN OTHERWISE ON THE DRAWINGS.
I. ALL THERMOSTATS AND TEMPERATURE CONTROL ELEMENTS TO CONTROL TEMPERATURE MANAGEMENT (HEATING AND COOLING, AND VENTILATION PER THE SPECIFIED ENERGY EFFICIENCY CODE.
J. SUPPLY AND INSTALL ADDITIONAL SUPPORTING STEEL AND VIBRATION ISOLATION SYSTEMS REQUIRED FOR THE INSTALLATION OF THE HVAC EQUIPMENT.
K. MATERIALS WITHIN PLENUMS AND DUCT INSULATION SHALL BE NONCOMBUSTIBLE OR SHALL HAVE A FLAME SPREAD INDEX OF NOT MORE THAN 25 AND A SMOKE DEVELOPMENT INDEX OF NOTE MORE THAN 50 WHEN TESTED IN ACCORDANCE WITH ASTM E84 (UL 723 AND NFPA 255), AS AMENDED BY ANSI/NFPA 90A.
L. INSULATION, INCLUDING EXPOSED FOUNDATION AND LOWER LEVER INSULATION, TO BE PROTECTED DURING CONSTRUCTION.

1.3 REFERENCED SPECIFICATIONS

A. GREEN ERA EQUIPMENT SPEC, BOILER(S)F-360, F-361 BIOGAS/NATURAL GAS DUAL FUEL BOILERS.

1.4 APPLICABLE CODES, STANDARDS, AND CERTIFICATIONS

A. SEE SHEET G-200.

1.5 AMBIENT DESIGN CONDITIONS

A. SEE SHEET G-200.

1.6 INTERIOR DESIGN CONDITIONS

ROOM	PRESSURE	CONDITIONED	HEATING		COOLING	
			TEMP.	RH	TEMP.	RH
MAIN BAY	-0.5" WCg	NO	60°F	"	--	--
MAINTENANCE ROOM ELECTRICAL ROOM 1 SHOP OFFICE SHOP WATER CLOSET	--	YES	70°F	30%	75°F	50%
ELECTRICAL ROOM 2	--	YES	70°F	30%	75°F	50%
DOCK PIER	--	NO	60°F	"	--	--
BOILER ROOM	--	NO	60°F	"	AMB +20°F	--

1.7 ENERGY EFFICIENCY

A. CLIMATE ZONE: 5A
B. OCCUPANCY GROUP: NOT GROUP R

1.8 BUILDING ENVELOPE

A. THE PERIMETER WALLS AND BUILDING WALLS SHALL BE INSULATED TO PREVENT CONDENSATION AND TO MEET THE MINIMUM THERMAL REQUIREMENTS OF BOTH PREVAILING ENERGY CODE AND BUILDING HVAC REQUIREMENTS.
B. MAXIMUM U-FACTOR VALUES SHALL BE:
   1. ROOF: U-0.035
   2. WALLS, ABOVE GRADE: U-0.034
   3. WALLS, BELOW GRADE & UNHEATED FLOOR: C-0.119
   4. WALLS, BELOW GRADE & HEATED FLOOR: F-0.65
   4. SLAB ON GRADE FLOOR, HEATER: F-0.54
   5. SLAB ON GRADE FLOOR, F-0.65
C. AIR LEAKAGE: <0.004 DFM/FT^2 VIA CONTINUOUS AIR BARRIER THAT IS SEALED, CAULKED, GASKETED AND WEATHER STRIPPED.
D. THERMAL VALUE OF ROOF INSULATION SHALL MEET THE MINIMUM REQUIREMENTS OF BOTH THE PREVAILING ENERGY CODE AND PREVENT CONDENSATION.
E. ALL INSULATION TO BE INSTALLED PER MANUFACTURER'S INSTRUCTIONS.

1.9 OPENINGS

A. EXTERIOR MANDOORS SHALL BE GASKETED AND HAVE A MINIMUM R-VALUE OF 2.7.
B. OVERHEAD DOORS SHALL HAVE A MINIMUM R-VALUE OF 17.5.
C. LOADING DOCK DOORS TO HAVE WEATHER SHIELDS.
D. ALL OPENINGS AND PENETRATIONS TO BE SEALED, CAULKED, GASKETED AND/OR WEATHER STRIPPED.

1.10 TESTING, ADJUSTING, AND BALANCING (TAB)

A. CONTRACTOR TO SUBMIT A TAB PLAN THAT, AT A MINIMUM, INCLUDES:
   1. LIST OF ALL AIR FLOW, SOUND LEVEL, SYSTEM CAPACITY AND EFFICIENCY MEASUREMENTS TO BE PERFORMED AND A DESCRIPTION OF SPECIFIC TEST PROCEDURES, PARAMETERS, FORMULAS TO BE USED.
   2. COPY OF FIELD CHECKOUT SHEETS AND LOGS TO BE USED, LISTING EACH PIECE OF EQUIPMENT TO BE TESTED, ADJUSTED AND BALANCED WITH THE DATA CELLS TO BE GATHERED FOR EACH.
   3. DISCUSSION OF WHAT NOTATIONS AND MARKINGS WILL BE MADE ON THE DUCT AND PIPING DRAWINGS DURING THE PROCESS.
   4. FINAL TEST REPORT FORMS TO BE USED.
   5. PROCEDURES FOR FORMAL DEFICIENCY REPORTS, INCLUDING SCOPE, FREQUENCY AND DISTRIBUTION.
B. CONTRACTOR TO SUBMIT A FINAL REPORT THAT, AT A MINIMUM, INCLUDES:
   1. REVISE TAB PLAN TO REFLECT ACTUAL PROCEDURES AND SUBMIT AS PART OF FINAL REPORT.
   2. PRIOR TO COMMENCING WORK, SUBMIT REPORT FORMS OR OUTLINES INDICATING ADJUSTING, BALANCING, AND EQUIPMENT DATA REQUIRED.
   3. SUBMIT DRAFT COPIES OF REPORT FOR REVIEW PRIOR TO FINAL ACCEPTANCE OF PROJECT. PROVIDE FINAL COPIES FOR OWNER AND FOR INCLUSION IN OPERATING AND MAINTENANCE MANUALS.
   4. INCLUDE ACTUAL INSTRUMENT LIST, WITH MANUFACTURER NAME, SERIAL NUMBER, AND DATE OF CALIBRATION.
   5. TEST REPORTS: INDICATE DATA ON AABC MN-1 FORMS, FORMS PREPARED FOLLOWING ASHRAE STD. 111, OR NEBB FORMS. INCLUDE REDUCED SIZE FLOOR PLAN WITH EQUIPMENT, DUCTWORK, AND TERMINAL DEVICES SHOWN AND CORRELATING TO REPORT FORMS.
C. EXAMINATION: VERIFY THAT SYSTEMS ARE COMPLETE AND OPERABLE BEFORE COMMENCING WORK. ENSURE THE FOLLOWING CONDITIONS:
   1. SYSTEMS ARE STARTED AND OPERATING IN A SAFE AND NORMAL CONDITION.
   2. TEMPERATURE CONTROL SYSTEMS ARE INSTALLED COMPLETE AND OPERABLE.
   3. PROPER THERMAL OVERLOAD PROTECTION IS IN PLACE FOR ELECTRICAL EQUIPMENT.
   4. FINAL FILTERS ARE CLEAN AND IN PLACE. IF REQUIRED, INSTALL TEMPORARY MEDIA IN ADDITION TO FINAL FILTERS.
   5. DUCT SYSTEMS ARE CLEAN OF DEBRIS.
   6. FANS ARE ROTATING CORRECTLY.
   7. ACCESS DOORS ARE CLOSED AND DUCT END CAPS ARE IN PLACE.
   8. AIR OUTLETS ARE INSTALLED AND CONNECTED.
   9. DUCT SYSTEM LEAKAGE IS MINIMIZED.
D. INSTALLATION TOLERANCES:
   1. AIR HANDLING SYSTEMS: ADJUST TO WITHIN PLUS OR MINUS 5 PERCENT OF DESIGN FOR SUPPLY SYSTEMS AND PLUS OR MINUS 10 PERCENT OF DESIGN FOR RETURN AND EXHAUST SYSTEMS.
   2. AIR OUTLETS AND INLETS: ADJUST TOTAL TO WITHIN PLUS 10 PERCENT AND MINUS 5 PERCENT OF DESIGN TO SPACE. ADJUST OUTLETS AND INLETS IN SPACE TO WITHIN PLUS OR MINUS 10 PERCENT OF DESIGN.
E. RECORDING AND ADJUSTING
   1. ENSURE RECORDED DATA REPRESENTS ACTUAL MEASURED OR OBSERVED CONDITIONS.
   2. PERMANENTLY MARK SETTINGS OF VALVES, DAMPERS, AND OTHER ADJUSTMENT DEVICES ALLOWING SETTINGS TO BE RESTORED. SET AND LOCK MEMORY STOPS.
   3. AFTER ADJUSTMENT, TAKE MEASUREMENTS TO VERIFY BALANCE HAS NOT BEEN DISRUPTED OR THAT SUCH DISRUPTION HAS BEEN RECTIFIED.
   4. LEAVE SYSTEMS IN PROPER WORKING ORDER, REPLACING BELT GUARDS, CLOSING ACCESS DOORS, CLOSING DOORS TO ELECTRICAL SWITCH BOXES, AND RESTORING THERMOSTATS TO SPECIFIED SETTINGS.
   5. AT FINAL INSPECTION, RECHECK RANDOM SELECTIONS OF DATA RECORDED IN REPORT. RECHECK POINTS OR AREAS AS SELECTED AND WITNESSED BY THE OWNER.
F. AIR SYSTEM PROCEDURE
   1. ADJUST AIR HANDLING AND DISTRIBUTION SYSTEMS TO PROVIDE REQUIRED OR DESIGN SUPPLY, RETURN, AND EXHAUST AIR QUANTITIES AT SITE ALTITUDE.
   2. MAKE AIR QUANTITY MEASUREMENTS IN DUCTS BY PITOT TUBE TRAVERSE OF ENTIRE CROSS SECTIONAL AREA OF DUCT.
   3. MEASURE AIR QUANTITIES AT AIR INLETS AND OUTLETS.
   4. ADJUST DISTRIBUTION SYSTEM TO OBTAIN UNIFORM SPACE TEMPERATURES FREE FROM OBJECTIONABLE DRAFTS AND NOISE.
   5. USE VOLUME CONTROL DEVICES TO REGULATE AIR QUANTITIES ONLY TO THE EXTENT THAT ADJUSTMENTS DO NOT CREATE OBJECTIONABLE AIR MOTION OR SOUND LEVELS. EFFECT VOLUME CONTROL BY DUCT INTERNAL DEVICES SUCH AS DAMPERS AND SPLITTERS.
   6. VARY TOTAL SYSTEM AIR QUANTITIES BY ADJUSTMENT OF FAN SPEEDS. PROVIDE DRIVE CHANGES REQUIRED. VARY BRANCH AIR QUANTITIES BY DAMPER REGULATION.
   7. MEASURE STATIC AIR PRESSURE CONDITIONS ON AIR SUPPLY UNITS, INCLUDING FILTER AND COIL PRESSURE DROPS, AND TOTAL PRESSURE ACROSS THE FAN. MAKE ALLOWANCES FOR 50 PERCENT LOADING OF FILTERS.
   8. ADJUST OUTSIDE AIR AUTOMATIC DAMPERS, OUTSIDE AIR, RETURN AIR, AND EXHAUST DAMPERS FOR DESIGN CONDITIONS.
   9. MEASURE BUILDING STATIC PRESSURE AND ADJUST SUPPLY, RETURN, AND EXHAUST AIR SYSTEMS TO PROVIDE REQUIRED RELATIONSHIP BETWEEN EACH TO MAINTAIN APPROXIMATELY 0.05 INCHES POSITIVE STATIC PRESSURE.

REV	DATE	BY	DESCRIPTION
E			
D			
C			
B			
A	10-9-20	RAA	ISSUED FOR CONSTRUCTION

SCALE: NONE
DATE: 12-11-19
DRAWN: JFD
CHECKED: RFC
APPROVED: RAA

ACEng
www.ac-engineering.com
Adams & Christensen Engineering, Inc.
782 Wexford Ct., Grayslake, IL 60030
Illinois Design Firm #184.006676-0002

CLIENT
GREEN ERA SUSTAINABILITY, LLC
ANAEROBIC DIGESTER PROJECT
650 W. 83RD STREET
CHICAGO, IL. 60620

DESCRIPTION
HVAC NOTES & SPECIFICATIONS
GENERAL

PROJECT NO:
1019.001

SHEET:
M-700

3.1 GENERAL REQUIREMENTS

A. PERFORM ALL WORK IN ACCORDANCE WITH APPLICABLE FEDERAL, STATE, AND LOCAL CODES AND ORDINANCES.
B. VERIFY LOCATIONS OF EXISTING UTILITIES PRIOR TO BEGINNING ANY EARTHWORK OR CONSTRUCTION.
C. PROTECT EXISTING STRUCTURES, PIPES, PUMPS, INSTRUMENTS, INSTRUMENTS AND ITEMS TO REMAIN.
D. WORK TO COMPLY WITH ASME B31.3.
E. PLASTIC PIPING TO BE INSTALLED IN ACCORDANCE WITH PIPE MANUFACTURER'S RECOMMENDED INSTALLATION PROCEDURES.
F. THE DRAWINGS DO NOT ATTEMPT TO SHOW EXACT DETAILS OF ALL PIPING. LOCAL OBSTRUCTIONS, VARIATIONS IN EQUIPMENT CONNECTION LOCATIONS, AND VARIATIONS IN VALVE AND IN-LINE COMPONENT DIMENSIONS THAT REQUIRE OFFSETS MAY BE ENCOUNTERED. ALL MEASUREMENTS AND DIMENSIONS SHALL BE VERIFIED ON SITE.

3.2 PIPE MATERIALS

A. COPPER TUBING
1. PIPE TO BE TYPE K, HARD TEMPERED, SEAMLESS COPPER TUBING, ASTM B88 AND FEDERAL SPECIFICATION WWT799. MANUFACTURER'S NAME OR TRADEMARK, AND TYPE OF TUBING TO BE IDENTIFIED AT 3 FOOT INTERVALS.
2. JOINTS TO BE BRAZED.

B. PVC PIPE
1. SCHEDULE: 40
2. CONFORM TO GRADE 1, WHITE, ASTM D1784, ASTM D1785, ASTM D3915, AND ASTM D2513.
3. FITTINGS:
   a. SOCKET END/FITTINGS: CONFORM TO ASTM D2466, ASTM D2467, ASTM D3915, AND ASTM F1970.
   b. THREADED END/FITTINGS: CONFORM TO ASTM D2464 AND ANSI B1.20.1.
   c. FLANGES: VAN STONE
   d. FITTINGS SHALL BE SAME GRADE AS AND CLASS AS PIPE.
4. SOLVENT CEMENT FOR JOINING PVC PIPING: ASTM D2564. INCLUDE PRIMER ACCORDING TO ASTM F656.

C. CARBON STEEL PIPE
1. SCHEDULE: SEE DRAWINGS
2. CONFORM TO ASTM A106, GRADE B
3. PIPES WITH UNDERGROUND EXPOSURE/BURIED SHALL HAVE CORROSION PROTECTION AS IDENTIFIED IN "BURIED PIPE INSTALLATION".
4. WELDING
   a. WELDING TO BE DONE IN ACCORDANCE WITH ASME CODE FOR PRESSURE PIPING BY COMPETENT WELDING EQUIPMENT OPERATORS.
   b. FURNISH PROOF OF COMPETENCY FOR EACH WELDER BY SUBMITTING A PREVIOUSLY ISSUED ASME WELDING CERTIFICATE OF AUTHORIZATION TO OWNER'S REPRESENTATIVE, IF REQUESTED. SPECIFIC CERTIFICATION FOR THIS PROJECT IS NOT REQUIRED.
   c. WELDING TO BE BY OXYACETYLENE OR ELECTRIC ARC METHOD. WELDING NECK FLANGES TO BE PROVIDED AT FLANGED VALVES AND AT EQUIPMENT.
5. FITTINGS 2" PIPE AND SMALLER: JOIN SEAMLESS OR WELDED PIPING 2" AND SMALLER:
   a. THREADED: COMPLY WITH ANSI B1.20.1 AND WITH RECTOR SEAL PIPE JOINT COMPOUND ON MALE THREADS ONLY.
   b. FITTINGS AND FLANGES TO COMPLY WITH ASTM A105.
   c. FITTINGS TO BE 3,000 LB.
6. FITTINGS 2 ½" PIPE AND LARGER UNLESS SPECIFICALLY NOTED:
   a. WELDED: BUTT WELDED
   b. FITTINGS TO CONFORM THE ASTM A234.
   c. FLANGES TO CONFORM TO ASTM A105.
   d. SCHEDULE TO MATCH PIPING.

B. BLACK IRON PIPE (BIP)
1. SCHEDULE: SEE DRAWINGS
2. CONFORM TO ASTM A53, TYPE S, GRADE A
3. FITTINGS
   a. MATERIALS: CONFORM TO ASTM A197
   b. DIMENSIONS: CONFORM TO ASME B16.3, B16.14, AND B16.39 (UNIONS)
   c. THREADS: CONFORM THE ASME B1.20.1
   d. CLASS: 150
4. FLANGES: TO BE ASME/ANSI B16.1 CLASS 150

C. GASKETS: FULL-FACED GASKETS BETWEEN FLAT-FACED FLANGES AND RING GASKETS FOR RAISED FACE FLANGES. MINIMUM THICKNESS OF 1/8 INCH. CLASS TO MATCH FLANGES.
1. MATERIALS: 304SS & PTFE STYLE "CG"

D. PIPE FASTENERS
1. TYPE 304 STAINLESS STEEL
   a. STUDS/BOLTS: ASTM A193-B8 CLASS 1, UNC. A320-B8 CLASS 1, UNC ALLOWED FOR PIPE PRESSURES LESS THAN 150 PSIG.
   b. HEX NUTS: DOUBLE ASTM A194-8, 18-8, UNC
   c. SAE FLAT WASHERS: 18-8
   d. SPLIT RING LOCK WASHERS: 18-8

3.3 FLEXIBLE CONNECTORS

B. FLEXIBLE HOSE CONNECTORS – METAL
1. TYPE: CORRUGATED METAL HOSE WITH BRAID
2. MATERIAL: 304/316 SS
3. BRAIDS: DOUBLE
4. PRESSURE RATING: 150 PSIG MAXIMUM WORKING PRESSURE AND 70°F MAXIMUM OPERATING TEMPERATURE
5. PROCESS CONNECTIONS: NPT.
6. STANDARDS: ANSI 536 CSA
7. INSTALLATION: INSTALL PER MANUFACTURER'S INSTRUCTIONS AND REQUIREMENTS. GUIDING AND ANCHORING PER EJMA RECOMMENDATIONS AND GUIDELINES.
8. STANDARD OF ACCEPTANCE: METRAFLEX GAS CONNECTOR.

3.4 VALVES

A. BALL VALVE, CARBON STEEL, 3-PIECE, 2 INCHES AND SMALLER
1. CONNECTIONS: SOCKET WELDED OR THREADED (NPT)
2. PRESSURE RATING: 1000 PSI WOG
3. PORT: FULL
4. BODY: CARBON STEEL (ASTM A216 GR. WCB)
5. BALL: CARBON STEEL (ASTM A216 GR. WCB)
6. STEM: 316 STAINLESS STEEL, BLOW-OUT PROOF
7. SEATS: PTFE/RTFE
8. SEALS: PTFE/RTFE
9. BOLTS: 304 STAINLESS STEEL
10. HANDLE: LOCKING LEVER HANDLE
11. COMPLIANCE: ASME B16.33 OR ANZI Z 21.15 (<0.5 PSIG ONLY)
12. STANDARD OF ACCEPTANCE: FLOW-TEK SERIES 8000, APOLLO SERIES 83A-100 (THREADED), APOLLO SERIES 83A-200 (SOCKET WELD)

B. BALL VALVE, CARBON STEEL, 2-PIECE, 2 INCHES AND SMALLER
1. CONNECTIONS: SOCKET WELDED OR THREADED (NPT)
2. PRESSURE RATING: 1000 PSI WOG
3. PORT: FULL
4. BODY: CARBON STEEL (ASTM A216 GR. WCB)
5. BALL: CARBON STEEL (ASTM A216 GR. WCB)
6. STEM: 316 STAINLESS STEEL, BLOW-OUT PROOF
7. SEATS: PTFE/RTFE
8. SEALS: PTFE/RTFE
9. HANDLE: LOCKING LEVER HANDLE
10. COMPLIANCE: ASME B16.33 OR ANZI Z 21.15 (<0.5 PSIG ONLY)
11. STANDARD OF ACCEPTANCE: FLOW-TEK SERIES 90, APOLLO SERIES 72-100

C. BALL VALVE, CARBON STEEL, 2-PIECE, 2 LARGER THAN 2 INCHES
1. CONNECTIONS: BUTTWELD OR ASME CLASS 150 FLANGE
2. PRESSURE RATING: CLASS 150 (CLASS 300)
3. PORT: FULL
4. BODY: CARBON STEEL (ASTM A216 GR. WCB)
5. BALL: CARBON STEEL (ASTM A216 GR. WCB)
6. STEM: 316 STAINLESS STEEL, BLOW-OUT PROOF
7. SEATS: PTFE/RTFE
8. SEALS: PTFE/RTFE
9. HANDLE: LOCKING LEVER HANDLE
10. COMPLIANCE: ASME B16.33 OR ANZI Z 21.15 (<0.5 PSIG ONLY)
11. STANDARD OF ACCEPTANCE: FLOW-TEK MODEL F15/F30, APOLLO SERIES 88A-200

D. BUTTERFLY VALVE, CAST IRON
1. CONNECTION: LUG
2. DISC: 316 STAINLESS STEEL
3. HANDLE: 8" AND LESS = LEVER, GREATER THAN 8" = GEAR
4. SEATS: RESILIENT SEATED. EPDM
5. STANDARD OF ACCEPTANCE: BRAY SERIES 31, CRANE 23/44, CENTRE LINE SERIES 200, APOLLO SERIES 143, DEZURIK BOS-CL, KEYSTONE 61L, OR APPROVED EQUAL.

E. GLOBE VALVE, FORGED STEEL
1. CLASS: 800LB
2. CONNECTION: SWXSW
3. PORT: CONVENTIONAL
4. BODY: ASTM A105N
5. TRIM: CR13
6. PACKING: GRAPHITE
7. BONNET: WELDED
8. HANDLE: OS&Y HANDWHEEL
9. STANDARD OF ACCEPTANCE: CRANE FIGURE B3644XUW, NEWCO FIGURE 28S-FS2 OR APPROVED EQUAL.

F. ANGLED SEAT VALVE WITH PNEUMATIC PILOT
1. CONNECTION: NPT
2. BODY: BRASS/GUNMETAL
3. TRIM: NBE
4. SEATS/SEALS: PTFE
5. FAIL POSITION: FAIL OPEN
6. ACTUATOR:PNEUMATIC PILOT
7. STANDARD OF ACCEPTANCE: BURKERT TYPE 2000 WITH TYPE B 454 617

3.5 PIPE SLEEVES

A. CONCRETE; WATERTIGHT – STANDARD WEIGHT STEEL SLEEVE WITH CONTINUOUS WELDED 2 INCH WATER COLLAR. SEALS SHALL BE LINK-SEAL OR EQUAL.
B. CAST-IN-PLACE CONCRETE AND MASONRY; NON-WATERTIGHT – STANDARD WEIGHT STEEL SLEEVE WITH OAKUM OR CAULK SEAL.
C. FLOOR SLEEVES IN EXPOSED AREAS – SCHEDULE 40 GALVANIZED STEEL PIPE SLEEVE.

3.6 BURIED PIPE INSTALLATION

A. EXISTING UTILITIES, PIPING, AND STRUCTURES
1. EXISTING UTILITIES AND STRUCTURES:
   A. EXISTING STRUCTURES, UTILITIES, AND PIPING ARE SHOWN ON THE DRAWINGS ONLY BY GENERAL LOCATION AND THE OWNER WILL MAKE ALL OTHER KNOWN RECORDS AVAILABLE. HOWEVER, THE OWNER DOES NOT GUARANTEE THE LOCATIONS AS SHOWN ON THE DRAWINGS.
   B. THE CONTRACTOR SHALL HAVE SOLE RESPONSIBILITY FOR PROVIDING TEMPORARY SUPPORT AND FOR PROTECTING AND MAINTAINING ALL EXISTING UTILITIES, PIPING, AND STRUCTURES IN THE PROJECT AREA DURING THE ENTIRE PERIOD OF CONSTRUCTION.
2. DEVIATIONS OCCASIONED BY OTHER UTILITIES, PIPE, AND STRUCTURES:
   A. WHEREVER EXISTING UTILITIES, PIPE, OR STRUCTURES PRESENT OBSTRUCTIONS TO THE GRADE AND ALIGNMENT OF THE PIPE, THEY SHALL BE PERMANENTLY SUPPORTED, REMOVED, RELOCATED OR RECONSTRUCTED BY THE CONTRACTOR THROUGH COOPERATION WITH OWNER. IN THOSE INSTANCES WHERE THE RELOCATION OR RECONSTRUCTION IS IMPRACTICABLE, A DEVIATION FROM THE GRADE WILL BE ORDERED AND THE CHANGE SHALL BE MADE IN THE MANNER DIRECTED.

B. EXCAVATIONTO BE CONDUCTED PER EXCAVATION SPECIFICATION/NOTES.
C. PIPE TRENCH AND BACKFILL AND BEDDING MATERIALS
1. FOLLOW PIPE AND FITTING MANUFACTURER'S RECOMMENDATIONS.
2. PLACE PIPE BEDDING BELOW PIPE BARREL (BEFORE SETTING PIPE) IN MAXIMUM 12 INCHES LIFTS AND COMPACT TO 95% OF THE MODIFIED PROCTOR MAXIMUM DRY DENSITY (ASTM D 1557). PIPE BEDDING TO BE 3/4 INCH CRUSHED STONE OR SAND.
3. COVER PIPE WITH BEDDING IN MAXIMUM 12 INCHES LIFTS AND COMPACT TO 95% OF THE MODIFIED PROCTOR MAXIMUM DRY DENSITY (ASTM D 1557). BACKFILL TO BE 3/4 INCH CRUSHED STONE OR NATURAL SOILS.
4. EMPLOY A PLACEMENT METHOD THAT DOES NOT DISTURB OR DAMAGE PIPING IN TRENCHES.
5. DO NOT BACKFILL OVER POROUS, WET, FROZEN OR SPONGY SUBGRADE SURFACES.
6. MAKE GRADE CHANGES GRADUAL AND BLEND WITH SURROUNDING AREA. GRADE TO DRAIN.
7. RESTORE SURFACE TO PRE-EXISTING CONDITIONS UNLESS NOTED OTHERWISE.

D. PLACEMENT OF PIPE WITHIN TRENCHES: INSTALL PIPE, FITTINGS, AND ACCESSORIES IN ACCORDANCE WITH SPECIFICATIONS AND MANUFACTURER'S INSTRUCTIONS AND AT THE GRADE AND SLOPE INDICATED ON THE DRAWINGS. BLOW OUT WITH COMPRESSED AIR ALL PIPING OR TUBING TO REMOVE ALL FOREIGN MATERIAL.
E. BUILDING PROCESS DRAIN PIPING SHALL BE INSTALLED WITH ADEQUATE SLOPE AS REQUIRED FOR EACH PARTICULAR SYSTEM. SANITARY WASTE PIPING SHALL BE INSTALLED WITH THE FOLLOWING MINIMUM SLOPES:
1. 1/4" PER FOOT FOR PIPE SIZES 3" DIA. AND SMALLER.
2. 1/8" PER FOOT FOR PIPE SIZES GREATER THAN 3" DIA.

F. PLASTIC TRACER TAPE
1. PLASTIC TRACER TAPE IS TO BE PLACED ABOVE BURIED PIPE UNLESS SPECIFIED OTHERWISE. PLACE TRACER TAPE APPROXIMATELY 2.5 FEET ABOVE THE PIPE CENTERLINE BUT NOT LESS THAN 12 INCHES DEEP. FOR PIPES BURIED 8 FEET DEEP OR GREATER, TRACER TAPE IS TO BE PLACED 12 INCHES BELOW GROUND. .
2. TRACER TAPE IS TO BE 6 INCHES WIDE, COLORED TO MATCH THE PIPE SERVICE, AND MADE OF INERT PLASTIC MATERIAL SUITABLE FOR DIRECT BURIAL. IF PIPE COLOR CODING IS NOT SPECIFIED, TRACER TAPE IS TO BE YELLOW.
3. TRACE TAPE LABELING SHALL CONTAIN BOLD LETTERS APPROXIMATELY 2 INCHES HIGH. MESSAGE TO BE "CAUTION _____ PIPE BURIED BELOW. THE BLANK TO INDICATE THE PIPE CONTENTS. THE MESSAGE IS TO BE REPEATED EVERY 2 FEET.
4. STANDARDS OF ACCEPTANCE: W. H. BRADY CO., SETEN NAME PLATE CORPORATION, MARKING SERVICES, INC.

G. LEAK TESTING SHALL BE CONDUCTED AS DETAILED IN FIELD QUALITY CONTROL.

3.7 ABOVE GROUND PIPE INSTALLATION

A. PIPES SHALL BE ROUND AND STRAIGHT. CUTTING SHALL BE DONE WITH PROPER TOOLS AND PIPES SHALL BE REAMED TO FULL SIZE AFTER CUTTING.
B. PIPING SHALL BE PROPERLY ENCLOSED, SUPPORTED, GUIDED, ANCHORED, SWAY BRACED, CONNECTED, TESTED, CLEANED AND FLUSHED OUT, AND SHALL BE PROPERLY INSULATED AND PROTECTED WHERE REQUIRED.
C. INSTALL PIPING FREE OF SAGS AND BENDS.
D. PIPES SHALL BE RUN WITH PROPER SLOPE TO PROVIDE FOR EASY DRAINING, IN GROUP RUNS WHERE APPLICABLE, AND IN A NEAT AND ORDERLY MANNER.
E. SIZES SHOWN IN THE DRAWINGS ARE NOMINAL PIPE SIZES AND NOT OUTSIDE DIAMETERS.
F. CAP OR COVER ALL OPEN PIPING DURING ERECTION TO PREVENT ENTRY OF FOREIGN MATERIAL.
G. BLOW OUT WITH COMPRESSED AIR ALL PIPING OR TUBING TO BE ERECTED TO REMOVE ALL FOREIGN MATERIAL.

ROBERT A. ADAMS REGISTERED NO. 062-054110 STATE OF ILLINOIS PROFESSIONAL ENGINEER
12/20/19
EXP: 11/30/21

REV	DATE	BY	DESCRIPTION
5			
4			
3			
2			
1			
1	10-9-20	RAA	ISSUED FOR CONSTRUCTION

SCALE: NONE
DATE: 12-11-19
DRAWN: JFD
CHECKED: RFC
APPROVED: RAA

ACEng
www.ac-engineering.com
Adams & Christensen Engineering, Inc.
782 Wexford Ct., Grayslake, IL 60030
Illinois Design Firm #184.006676-0002

CLIENT
GREEN ERA SUSTAINABILITY, LLC
ANAEROBIC DIGESTER PROJECT
650 W. 83RD STREET
CHICAGO, IL. 60620

DESCRIPTION
HVAC NOTES & SPECIFICATIONS
PIPING (1 OF 2)

PROJECT NO: 1019.001
SHEET: M-702

3.8 PIPE HANGERS AND SUPPORTS

A. PROVIDE CONCRETE INSERTS, CLAMPS, PIPE HANGERS, ANCHORS AND EQUIPMENT SUPPORTS REQUIRED TO RIGIDLY SUPPORT THE SYSTEMS AND EQUIPMENT INSTALLED. HANGER DESIGN SHALL PERMIT VERTICAL ADJUSTMENT AND LATERAL MOVEMENT TO ALLOW PIPE EXPANSION.

B. PIPER HANGERS AND SUPPORTS SHALL MEET THE REQUIREMENTS OF SECTION 305 OF THE INTERNATIONAL MECHANICAL CODE.

C. PIPER HANGERS AND SUPPORTS FOR FUEL GAS SHALL MEET THE REQUIREMENTS OF THE APPLICABLE FUEL GAS CODE.

D. PIPE SUPPORT SPACING SHALL NOT EXCEED:

PIPE MATERIAL	MAX. HORIZ. SPACING (FT)	MAX. VERT. SPACING (FT)
PVC	4	10
COPPER PIPE	12	10
COPPER TUBING, SMALLER THAN 1-1/2"	6	10
STEEL PIPE, ½"	6	10
STEEL PIPE, ¾" – 1"	8	10
STEEL PIPE, 1-1/4"	10	10
STEEL PIPE, >1-1/4"	12	10

3.9 FIELD QUALITY CONTROL

A. NON-DESTRUCTIVE EXAMINATION(S) TO BE PERFORMED USING THE METHODS AND FREQUENCIES SPECIFIED IN THE APPLICABLE ASME B31 STANDARD, AWWA, OR DOT STANDARD. TESTING/EXAMINATION PERSONNEL SHALL BE TRAINED AND CERTIFIED TO PERFORM THE TEST/EXAMINATIONS.

B. LEAK TEST - GENERAL: ALL PIPELINES SHALL BE TESTED FOR LEAKS AND EXFILTRATION AS SPECIFIED.
1. TEMPORARY VALVES, PLUGS, BULKHEADS, AND OTHER PRESSURE TESTING AND WATER CONTROL EQUIPMENT AND MATERIALS SHALL BE PROVIDED BY THE CONTRACTOR SUBJECT TO OWNER'S REVIEW. NO MATERIALS SHALL BE USED WHICH WOULD BE INJURIOUS TO PIPELINE STRUCTURE, FUTURE FUNCTION, AND SITE PERSONNEL. AIR TEST GAGES SHALL BE LABORATORY-CALIBRATED TEST GAGES AND SHALL BE RECALIBRATED BY A CERTIFIED LABORATORY AT THE CONTRACTOR'S EXPENSE PRIOR TO THE LEAKAGE TEST, IF REQUIRED BY OWNER.
2. UNLESS OTHERWISE SPECIFIED, CLEAN WATER FOR TESTING SHALL BE FURNISHED BY THE CONTRACTOR. THE CONTRACTOR SHALL MAKE ALL NECESSARY PROVISIONS FOR CONVEYING THE WATER FROM THE SOURCE TO THE POINTS OF USE.
3. EACH SECTION OF PIPE SHALL BE INSTALLED PRIOR TO TESTING.
4. EACH SECTION OF PIPE SHALL BE TESTED AS A SINGLE UNIT USING PLUGS OR VALVES.
5. ALL TESTING OPERATIONS SHALL BE PERFORMED IN THE PRESENCE OF OWNER.

C. LEAK TEST PROCEDURES
1. PIPES FOR COMPRESSED AIR SERVICE.
   A. COMPRESSED AIR SHALL THEN BE INTRODUCED INTO THE ISOLATED TEST SECTION UNTIL THE INTERNAL PRESSURE STABILIZES AT THE PRESSURES SPECIFIED IN ITEM D – TEST PRESSURES.
   B. FOLLOWING PRESSURE STABILIZATION, THE PIPE SECTION SHALL REMAIN PRESSURIZED FOR A PERIOD OF 15 MINUTES. AT THE END OF THIS TIME THE PIPE PRESSURE SHALL MEET THE REQUIREMENTS SPECIFIED IN ITEM E – ACCEPTABLE TEST CRITERIA.
   C. IF THE RESULTS ARE UNACCEPTABLE, CONTRACTOR TO PROCEED AS DETAILED IN SECTION FE – REQUIRED TEST FAILURE ACTIONS.
   D. IF RESULTS ARE ACCEPTABLE, RELEASE OF PRESSURE FROM THE PIPELINES SHALL BE PERFORMED IN ACCORDANCE WITH THE CONTRACTOR'S PROPOSED TESTING PLAN AS APPROVED BY OWNER.
   E. ALL TESTING PLUGS, VALVES, AND FITTINGS SHALL BE SUBSEQUENTLY REMOVED FROM THE DISCHARGE PIPING FOLLOWING TESTING.
2. PIPES LIQUID SERVICE.
   A. WATER SHALL BE INTRODUCED INTO THE ISOLATED TEST SECTION AND PRESSURIZED TO THE EXTENT PRACTICAL.
   B. COMPRESSED AIR SHALL THEN BE INTRODUCED INTO THE ISOLATED TEST SECTION UNTIL THE INTERNAL PRESSURE STABILIZES AT THE PRESSURES SPECIFIED IN ITEM D – TEST PRESSURES.
   C. FOLLOWING PRESSURE STABILIZATION, THE PIPE SECTION SHALL REMAIN PRESSURIZED FOR A PERIOD OF 15 MINUTES. AT THE END OF THIS TIME THE PIPE PRESSURE SHALL MEET THE REQUIREMENTS SPECIFIED IN ITEM E – ACCEPTABLE TEST CRITERIA.
   D. IF THE RESULTS ARE UNACCEPTABLE, CONTRACTOR TO PROCEED AS DETAILED IN SECTION F – REQUIRED TEST FAILURE ACTIONS.
   E. IF RESULTS ARE ACCEPTABLE, RELEASE OF WATER FROM PIPELINES SHALL BE PERFORMED IN ACCORDANCE WITH THE CONTRACTOR'S PROPOSED TESTING PLAN AS APPROVED BY OWNER.
   F. ALL TESTING PLUGS, VALVES, AND FITTINGS SHALL BE SUBSEQUENTLY REMOVED FROM THE DISCHARGE PIPING FOLLOWING TESTING.
3. ADDITIONAL REQUIREMENTS FOR BURIED PIPING
   A. ALL PIPE TRENCHES SHALL BE PARTIALLY BACKFILLED PRIOR TO TESTING.
   B. ONCE THE BURIED PIPE HAS BEEN PROPERLY TESTED, THE PIPE WILL BE COMPLETELY BACKFILLED AND TEST AGAIN IN PLACE TO ENSURE THAT ALL JOINTS AND APPURTENANCES ARE FREE FROM LEAKS.

D. TEST PRESSURES
1. GRAVITY AND VACUUM PIPE: TEST PRESSURE TO BE AS SPECIFIED IN THE PIPE SCHEDULE. IF TEST PRESSURES ARE NOT LISTED IN A PIPE SCHEDULE, THE TEST PRESSURE SHALL BE 5 PSIG.
2. FORCEMAINS AND PRESSURIZED PIPE: TEST PRESSURE TO BE AS SPECIFIED IN THE PIPE SCHEDULE. IF TEST PRESSURES ARE NOT LISTED IN A PIPE SCHEDULE, THE TEST PRESSURE SHALL BE 150% OF THE DESIGN PRESSURE OR THE PIPE'S MAXIMUM ALLOWABLE INTERNAL PRESSURE, WHICHEVER IS LESS.

E. ACCEPTABLE TEST CRITERIA. THE PRESSURE WITHIN THE PIPE SHALL NOT DEVIATE (CONSIDERING NO APPLICABLE CHANGE IN ATMOSPHERIC CONDITIONS) BY MORE THAN 2 PERCENT DURING TEST PERIOD FOR FORCEMAINS AND PRESSURE PIPES OR 0.5 PSIG FOR GRAVITY FLOW AND VACUUM PIPES.

F. REQUIRED TEST FAILURE ACTIONS. WHEN LEAKAGE EXCEEDS THE AMOUNT ALLOWED, THE CONTRACTOR, SHALL LOCATE THE LEAKS AND MAKE THE NECESSARY REPAIRS OR REPLACEMENTS, TO REDUCE THE LEAKAGE TO THE SPECIFIED LIMITS. ANY INDIVIDUALLY DETECTABLE LEAKS SHALL BE REPAIRED, REGARDLESS OF THE RESULTS OF THE TESTS. THE PIPE SECTIONS SHALL BE TESTED AGAIN BY THE CONTRACTOR.

3.10 STEEL PIPE COATINGS (FERROUS PIPING ONLY)

A. NON-SUBMERGED/ABOVEGROUND
1. BARE/UNINSULATED (OPERATING TEMPERATURE <170°F):
   a. SURFACE PREPARATION SSPC-SP2 AND 3
   b. FIRST COAT: EPOXY MASTIC 5 MIL DFT
   c. SECOND COAT: URETHANE 2 MIL DFT
2. INSULATED (OPERATING TEMPERATURE <170°F):
   a. SURFACE PREPARATION SSPC-SP2 AND 3
   b. FIRST COAT: EPOXY MASTIC 5 MIL DFT
3. HIGH TEMPERATURE, INSULATED (OPERATING TEMPERATURE >=170°F):
   a. SURFACE PREPARATION SSPC-SP10
   b. FIRST COAT: INORGANIC ZINC SILICATE PRIMER 2-3 MIL DFT
4. HIGH TEMPERATURE, UNINSULATED (OPERATING TEMPERATURE >=170°F):
   a. SURFACE PREPARATION SSPC-SP10
   b. FIRST COAT: INORGANIC ZINC SILICATE PRIMER 2-3 MIL DFT
   c. SECOND COAT: HIGH SOLIDS EPOXY 4-8 MIL DFT

B. SUBMERGED OR BURIED:
1. OPERATING TEMPERATURE <170°F:
   a. SURFACE PREPARATION SSPC-SP10
   b. FIRST COAT: COAL TAR EPOXY, 8 MIL D.F.T
   c. SECOND COAT: COAL TAR EPOXY, 8 MIL D.F.T.
2. OPERATING TEMPERATURE >=170°F:
   a. SURFACE PREPARATION SSPC-SP10
   b. FIRST COAT: INORGANIC ZINC SILICATE PRIMER 2-3 MIL DFT
   c. SECOND COAT: HIGH SOLIDS EPOXY (UNTINTED) 4-8 MIL DFT

3.11 PIPE INSULATION

A. PIPE SHALL BE INSULATION IN ACCORDANCE WITH SECTION C403.2.10 OF THE INTERNATIONAL ENERGY EFFICIENCY CODE AND THIS SECTION:

B. INSULATION SCHEDULE:
1. REFRIGERANT PIPING: 0.5" INSULATION WITH JACKET FOR PHYSICAL AND SOLAR RADIATION DEGRADATION.
2. CONDENSATE DRAIN PIPING, INSIDE): 1.0" 1-INCH THICK FIBERGLASS INSULATION AND JACKETED WITH A PVC JACKET.
3. ALL OTHER PIPING: MINIMUM INSULATION THICKNESS
   a. PIPE SIZES 2-INCH AND SMALLER: 1-INCH.
   b. PIPE SIZES 2-1/2 INCH TO 8-INCH: 1-1/2 INCHES.
   c. PIPE SIZES 10-INCH AND LARGER: 2 INCHES.

ROBERT A. ADAMS REGISTERED NO. 062-054119 STATE OF ILLINOIS PROFESSIONAL ENGINEER
12/20/19
EXP: 11/30/21

REV	DATE	BY	DESCRIPTION
E			
D			
C			
B			
A	10-9-20	RAA	ISSUED FOR CONSTRUCTION

SCALE: NONE
DATE: 12-11-19
DRAWN: JFD
CHECKED: RFC
APPROVED: RAA

ACEng
www.ac-engineering.com
Adams & Christensen Engineering, Inc.
782 Wexford Ct., Grayslake, IL 60030
Illinois Design Firm #184.006676-0002

CLIENT
GREEN ERA SUSTAINABILITY, LLC
ANAEROBIC DIGESTER PROJECT
650 W. 83RD STREET
CHICAGO, IL. 60620

DESCRIPTION
HVAC NOTES & SPECIFICATIONS
PIPING (2 OF 2)

PROJECT NO: 1019.001
SHEET: M-703

4.1 ROOF-TOP UNITS – HEAT PUMPS

A. DESCRIPTION: FACTORY ASSEMBLED AND TESTED; AND CONSISTING OF COMPRESSORS, CONDENSERS, EVAPORATOR COILS, CONDENSER AND EVAPORATOR FANS, HEAT PUMPS, REFRIGERATION AND TEMPERATURE CONTROLS, FILTERS, AND DAMPERS.
C. TYPE: DUAL FUEL HEAT PUMP
D. COOLING CAPACITY: SEE HVAC SCHEDULE
E. HEATING CAPACITY: SEE HVAC SCHEDULE
F. EFFICIENCY: HIGH. SEE HVAC SCHEDULE FOR REQUIRED RATINGS
G. ELECTRICAL: 460VAC / 3PH / 60HZ. SINGLE POINT.
H. CONTROLS: ON-BOARD PROCESSOR AND SYSTEM COMPLAINT WITH APPLICABLE ENERGY EFFICIENCY CODE, AT A MINIMUM WITH:
1. OPTIMAL START CONTROL
2. PREVENT SUPPLEMENTAL ELECTRICAL HEAT WHEN NOT REQUIRED
3. CLOGGED FILTER SWITCH
4. FAN FAILURE SWITCH
5. DISCHARGE AIR SENSING SWITCH
I. FRESH AIR CONTROLS:
1. 100% POWER EXHAUST FAN. SEE SHEET M-710 FOR REQUIRED CAPACITY AND HORSEPOWER.
2. LOW LEAK ECONOMIZER WITH BAROMETRIC RELIEF
J. COMPRESSOR: SCROLL
K. FANS:
1. OUTDOOR: PROPELLER
2. INDOOR: SINGLE OR MULTIZONE VAV
3. MINIMUM MOTOR EFFICIENCY <1 HP IS 70%
L. ENCLOSURE:
1. HINGED ACCESS PANELS
M. AIR FILTERS: MFG. STD.
N. CONDENSER COIL: MFG. STD.
O. REFRIGERANT SYSTEM:
1. R-410A WITH PRESSURE RELIEF VALVE ON HIGH PRESSURE SIDE FOR UNITS WITH OVER 30 POUNDS CHARGE.
2. NO EXPANSION VALVES, DEVICES, OR CONNECTIONS WITH AIR STREAM
3. REFRIGERATION PIPING TO BE TYPE "K" COPPER.
4. PIPING CONNECTIONS TO BE BRAZED.
P. THROUGH BASE CONNECTIONS: SEE DRAWINGS AND HVAC SCHEDULE
Q. ACCESSORIES:
1. DISCONNECT SWITCH
2. 120VAC POWERED CONVENIENCE OUTLET
3. SMOKE DETECTORS: SUPPLY AND RETURN DUCTS
4. ROOF CURB WHERE MOUNTED ON ROOF (SEE DRAWINGS)

4.2 ROOF-TOP UNITS – AIR CONDITIONERS

A. DESCRIPTION: FACTORY ASSEMBLED AND TESTED; CONSISTING OF COMPRESSORS, CONDENSERS, EVAPORATOR COILS, CONDENSER AND EVAPORATOR FANS, REFRIGERATION AND TEMPERATURE CONTROLS, FILTERS, AND DAMPERS.
B. TYPE: AIR CONDITIONER WITH NATURAL GAS HEAT
C. COOLING CAPACITY: SEE HVAC SCHEDULE
D. HEATING CAPACITY: SEE HVAC SCHEDULE
E. EFFICIENCY: SEE HVAC SCHEDULE FOR REQUIRED RATINGS
F. ELECTRICAL: 460VAC / 3PH / 60HZ. SINGLE POINT.
G. CONTROLS: ON-BOARD PROCESSOR AND SYSTEM COMPLAINT WITH APPLICABLE ENERGY EFFICIENCY CODE, AT A MINIMUM WITH:
1. OPTIMAL START CONTROL
2. PREVENT SUPPLEMENTAL ELECTRICAL HEAT WHEN NOT REQUIRED
3. CLOGGED FILTER SWITCH
4. FAN FAILURE SWITCH
5. DISCHARGE AIR SENSING SWITCH
H. FRESH AIR CONTROLS:
1. 100% POWER EXHAUST FAN. SEE SHEET M-710 FOR REQUIRED CAPACITY AND HORSEPOWER.
2. ULTRA LOW LEAK EXHAUST DAMPER AND ECONOMIZER.
I. COMPRESSOR: SCROLL
J. FANS:
1. OUTDOOR: PROPELLER
2. INDOOR: MULTIZONE VAV WITH STATIC PRESSURE SENSORS AND PRESSURE RELIEF.
3. MINIMUM MOTOR EFFICIENCY <1 HP IS 70%
K. ENCLOSURE:
2. HINGED ACCESS PANELS
L. AIR FILTERS: MFG. STD.
M. CONDENSER COIL: MFG. STD.
N. REFRIGERANT SYSTEM:
1. R-410A WITH PRESSURE RELIEF VALVE ON HIGH PRESSURE SIDE FOR UNITS WITH OVER 30 POUNDS CHARGE.
2. NO EXPANSION VALVES, DEVICES, OR CONNECTIONS WITH AIR STREAM
3. REFRIGERATION PIPING TO BE TYPE "K" COPPER.
4. PIPING CONNECTIONS TO BE BRAZED.
O. THROUGH BASE CONNECTIONS: SEE DRAWINGS AND HVAC SCHEDULE
P. ACCESSORIES:
1. DISCONNECT SWITCH
2. 120VAC POWERED CONVENIENCE OUTLET
3. SMOKE DETECTORS: SUPPLY AND RETURN DUCTS
4. ROOF CURB WHERE MOUNTED ON ROOF (SEE DRAWINGS)

4.3 MAKE-UP AIR UNITS

A. TYPE: SEE HVAC SCHEDULE
B. CAPACITY: SEE HVAC SCHEDULE
C. MOUNTING: SEE HVAC SCHEDULE
D. ORIENTATION: HORIZONTAL
E. LOCATION: OUTDOORS
F. GENERAL:
1. 100% OUTSIDE AIR
2. LEFT SIDE DUCT CONNECTION
3. RIGHT SIDE ACCESS
G. HOUSING
1. DOUBLE WALL CONSTRUCTION WITH 1" FIBERGLASS INSULATION.
2. G90 GALVANIZED
H. COOLING SYSTEM - NA
I. HEATING SYSTEM
1. DIRECT GAS-FIRED FURNACE
2. FUEL: NATURAL GAS
3. GAS PRESSURE: 14" WCG TO 5 PSIG
4. EFFICIENCY: 92% MIN.
5. TURNDOWN: 25:1
6. SAFETY: HIGH GAS LIMIT SWITCH WITH MAIN GAS VALVE AUTOMATIC CLOSURE ON HIGH GAS PRESSURE.
J. INDOOR FAN - NA
K. FAN MOTOR
1. ODP, NEMA PREMIUM EFFICIENCY.
L. CONTROLS
1. REMOTE CONTROL PANEL WITH HOA SWITCH, BLOWER ON INDICATOR LIGHT, DIRTY FILTER INDICATOR LIGHT.
2. ENCLOSURE: NEMA 1 GALVANIZED STEEL WITH ENAMEL FINISH.
M. FILTERS: 2" ALUMINUM
N. STANDARD OF ACCEPTANCE: SEE HVAC SCHEDULE
O. ADDITIONAL ACCESSORIES
1. DIRTY FILTER SWITCH
2. DUCT SMOKE DETECTOR (GREENHECK DUCTSD OR COMPATIBLE). SHIPPED LOOSE FOR FIELD INSTALLATION.
3. WEATHERHOOD WITH BIRD SCREEN. KNOCKDOWN-TYPE TO BE FIELD ERECTED.
4. INLET DAMPER (GREENHECK VCD-23 OR EQUAL).
5. FREEZE PROTECTION.
6. AIR FLOW PROVING CONTACT.

4.4 AIR HANDLER UNITS

A. TYPE: SEE HVAC SCHEDULE
B. CAPACITY: SEE HVAC SCHEDULE
C. MOUNTING: SEE HVAC SCHEDULE
D. ORIENTATION: HORIZONTAL
E. GENERAL:
1. END RETURN
2. LEFT OR RIGHT REFRIGERANT/HEATING FLUID AND ELECTRICAL CONNECTIONS
F. CASING
1. ZINC COATED, HEAVY GAUGE, GALVANIZED STEEL WITH WEATHER-RESISTANT BAKED ENAMEL FINISH.
G. REFRIGERATION SYSTEM – NA
H. HEATING SYSTEM
1. DIRECT GAS-FIRED FURNACE
2. FUEL: NATURAL GAS
3. GAS PRESSURE: 14" WCG TO 5 PSIG
4. EFFICIENCY: 92% MIN.
5. TURNDOWN: 25:1
6. SAFETY: HIGH GAS LIMIT SWITCH WITH MAIN GAS VALVE AUTOMATIC CLOSURE ON HIGH GAS PRESSURE.
I. INDOOR FAN
1. CENTRIFUGAL TYPE.
2. PERMANENTLY LUBRICATED BEARINGS.
J. FAN MOTOR:
1. TEFC NEMA PREMIUM EFFICIENCY
2. CLASS B OR GREATER
K. CONTROLS
a. REMOTE CONTROL PANEL WITH HOA SWITCH AND BLOWER ON INDICATOR LIGHT.
b. ENCLOSURE: NEMA 1 GALVANIZED STEEL WITH ENAMEL FINISH.
L. FILTERS: NA
M. STANDARD OF ACCEPTANCE: SEE HVAC SCHEDULE
N. ADDITIONAL ACCESSORIES
1. DUCT SMOKE DETECTOR (GREENHECK DUCTSD OR COMPATIBLE). SHIPPED LOOSE FOR FIELD INSTALLATION.
2. INLET DAMPER (GREENHECK VCD-23 OR EQUAL)
3. HANGING MOUNTING BRACKETS

4.5 UNIT HEATERS – VENT FREE GAS HEATERS

A. CONTRACTOR SHALL PROVIDE, RECEIVE, STORE, HANDLE, MOUNT & SUPPORT, PIPE, VENT, ALIGN, INSTALL ALL OPTIONAL FEATURES, TAG, WIRE, AND OTHERWISE INSTALL AND START-UP VENT-FREE GAS HEATERS. EACH CAPABLE OF:
1. TYPE: SEE UNIT HEATER SCHEDULE
2. FUEL: SEE UNIT HEATER SCHEDULE
3. CAPACITY (BTU/HR): SEE UNIT HEATER SCHEDULE
4. CONTROLS: SEE UNIT HEATER SCHEDULE
5. EFFICIENCY: SEE UNIT HEATER SCHEDULE
C. FUEL GAS TRAIN: CONTRACTOR TO PROVIDE FUEL GAS PIPING, VALVES, REGULATORS, FLEXIBLE CONNECTORS, SEDIMENT TRAPS, 1/8-INCH PLUGGED NPT TAP, AND UNIONS SIZED FOR EACH HEATER AND MEETING THE REQUIREMENTS OF THE GOVERNING MECHANICAL CODE AND NFPA 54.
D. INSTALLATION: INSTALLATION TO COMPLY WITH HEATER MANUFACTURER'S REQUIREMENTS, GOVERNING MECHANICAL CODE AND NFPA 54.
E. STANDARD OF ACCEPTANCE: SEE HVAC SCHEDULE
E. UNIT HEATERS SHALL INCLUDE THE FOLLOWING OPTIONS/ACCESSORIES
1. DISCONNECT SWITCH
2. MOUNTING BRACKETS

4.6 LABORATORY HOODS

A. TYPE: WALL CANOPY
B. CAPACITY: SEE HVAC SCHEDULE
C. HOOD
1. SIZE: SEE HVAC SCHEDULE
2. RIGHT END: FINISHED
3. LEFT END: FINISHED
D. COLLAR SIZE: SEE HVAC SCHEDULE
E. HOOD MATERIAL: 430 STAINLESS STEEL
F. LIGHT: NA

4.7 CEILING EXHAUST FANS

A. DESCRIPTION: DIRECT-DRIVEN CEILING-MOUNTED EXHAUST FAN.
B. CAPACITIES: SEE HVAC SCHEDULE
C. HOUSING: GALVANIZED-STEEL
D. GRILLE: POLYSTYRENE
E. CEILING RADIATION DAMPER
F. MOTOR: ODP WITH THERMAL OVERLOAD
G. BACKDRAFT DAMPER: SPRING LOADED
H. APPROVALS: UL 705, ENERGY STAR
I. STANDARD OF ACCEPTANCE: SEE HVAC SCHEDULE
J. ACCESSORIES: ROUND DISCHARGE VENT CAP.

4.8 SIDEWALL EXHAUST FANS

A. CONTRACTOR SHALL PROVIDE, RECEIVE, STORE, HANDLE, SET IN PENETRATION, FLASH & SEAL, ALIGN, TAG, WIRE AND OTHERWISE INSTALL AND START-UP OF WALL MOUNTED VENTILATOR(S) AS IDENTIFIED IN THE SUPPLY & EXHAUST VENTILATION FAN SCHEDULE.
B. TYPE: ALUMINUM, WALL-MOUNTED, HORIZONTAL CENTRIFUGAL EXHAUST VENTILATOR.
C. DRIVE: DIRECT OR BELT
D. FAN SHALL BE BOLTED AND WELDED CONSTRUCTION UTILIZING CORROSION-RESISTANT FASTENERS. THE SPUN ALUMINUM BODY SHALL BE CONSTRUCTED OF MINIMUM 16 GAUGE MARINE ALLOY ALUMINUM, BOLTED TO A RIGID ALUMINUM SUPPORT STRUCTURE. THE SPUN ALUMINUM WALL FLANGES SHALL HAVE PRE-PUNCHED KEY SLOT HOLES. THE WINDBAND SHALL HAVE A ROLLED BEAD FOR ADDED STRENGTH. AN INTEGRAL CONDUIT CHASE SHALL BE PROVIDED INTO THE MOTOR COMPARTMENT. THE MOTOR SHALL BE ENCLOSED IN A WATER-TIGHT COMPARTMENT, SEPARATED FROM EXHAUST AIR STREAM. UNIT SHALL BEAR AN ENGRAVED NAMEPLATE INDICATING DESIGN CFM AND STATIC PRESSURE.
E. WHEEL SHALL BE CENTRIFUGAL BACKWARD INCLINED, CONSTRUCTED OF 100-PERCENT ALUMINUM, INCLUDING PRECISION CAST ALUMINUM HUB. AN AERODYNAMIC ALUMINUM INLET CONE SHALL BE PROVIDED FOR MAXIMUM PERFORMANCE AND EFFICIENCY. WHEEL SHALL BE BALANCED IN ACCORDANCE WITH AMCA STANDARD 204-96.
F. MOTOR SHALL BE 120VAC, 1 PHASE, 60 HZ ODP, THERMAL OVERLOAD, 1.15 MIN. SERVICE FACTOR. MIN. 70% EFFICIENCY (<1 HP).
G. CERTIFICATIONS: UL 705 AND AMCA CERTIFIED RATINGS SEAL FOR SOUND AND AIR PERFORMANCE.
H. PERFORMANCE:
1. TYPE: SEE SUPPLY & EXHAUST VENTILATION FAN SCHEDULE
2. AIR FLOW: SEE SUPPLY & EXHAUST VENTILATION FAN SCHEDULE
3. STATIC PRESSURE: SEE SUPPLY & EXHAUST VENTILATION FAN SCHEDULE
I. FANS SHALL INCLUDE THE FOLLOWING OPTIONS:
1. ALUMINUM GRAVITY BACKDRAFT DAMPER
2. BIRD SCREEN: ½ INCH ALUMINUM MESH
4. DISCONNECT SWITCH: NONFUSIBLE TYPE, WITH THERMAL-OVERLOAD PROTECTION MOUNTED INSIDE FAN HOUSING, FACTORY WIRED THROUGH AN INTERNAL ALUMINUM CONDUIT. 3 PHASE MOTORS ONLY.
5. DISCONNECT SWITCH
J. STANDARD OF ACCEPTANCE: SEE HVAC SCHEDULE

ROBERT A. ADAMS
REGISTERED
NO.
062-054110
STATE OF
ILLINOIS
PROFESSIONAL ENGINEER
12/20/19
EXP:
11/30/21

REV	DATE	BY	DESCRIPTION
5			
4			
3			
2			
1	10-9-20	RAA	ISSUED FOR CONSTRUCTION

SCALE: NONE
DATE: 12-11-19
DRAWN: JFD
CHECKED: RFC
APPROVED: RAA

ACEng
www.ac-engineering.com
Adams & Christensen Engineering, Inc.
782 Wexford Ct., Grayslake, IL 60030
Illinois Design Firm #184.006676-0002

CLIENT
GREEN ERA SUSTAINABILITY, LLC
ANAEROBIC DIGESTER PROJECT
650 W. 83RD STREET
CHICAGO, IL. 60620

DESCRIPTION
HVAC NOTES & SPECIFICATIONS
EQUIPMENT (1 OF 3)

PROJECT NO:
1019.001

SHEET:
M-704

4.9 AXIAL/PROPELLER WALL FANS

A. CAPACITIES: SEE HVAC SCHEDULE
B. WHEEL:
1. CONSTRUCTED OF CAST ALUMINUM BLADES AND HUBS
2. SECURELY ATTACHED TO FAN SHAFT WITH A STANDARD SQUARE KEY AND SET SCREW OR TAPERED BUSHING
3. STATICALLY AND DYNAMICALLY BALANCED IN ACCORDANCE TO AMCA STANDARD 204-05
4. THE PROPELLER AND FAN INLET WILL BE MATCHED AND SHALL HAVE PRECISE RUNNING TOLERANCES FOR MAXIMUM PERFORMANCE AND OPERATING EFFICIENCY
C. MOTORS:
1. DESCRIPTION: NEMA MG 1, DESIGN B, DESIGNED FOR USE WITH VARIABLE SPEED DRIVES
2. ROTOR: SQUIRREL CAGE.
3. BEARINGS: GREASE LUBRICATED ANTI-FRICTION BALL BEARINGS WITH HOUSINGS EQUIPPED WITH PLUGGED PROVISION FOR RELUBRICATION, RATED FOR MINIMUM AFBMA 9, L-10 LIFE OF 20,000 HOURS.
4. EFFICIENCY: PREMIUM PER NEMA MG 1.
5. INSULATION CLASS: H.
6. TEMPERATURE RISE: MATCHED TO RATING FOR CLASS B INSULATION.
7. THERMAL PROTECTION: MEET NEMA MG 1 REQUIREMENTS.
8. ENCLOSURE: TEFC.
9. HAZARDOUS AREA RATING: NON-HAZARDOUS
D. SHAFT AND BEARINGS:
1. BEARING SHALL BE CAST PILLOW BLOCK
2. BEARINGS SHALL BE SELECTED FOR A MINIMUM L10 LIFE IN EXCESS OF 100,000 HOURS (EQUIVALENT TO L50 AVERAGE LIFE OF 500,000 HOURS), AT MAXIMUM CATALOGED OPERATING SPEED
3. FAN SHAFT FIRST CRITICAL SPEED IS AT LEAST 25 PERCENT OVER MAXIMUM OPERATING SPEED
E. DRIVE FRAME:
1. BOLTED STRUCTURAL STEEL CHANNEL CONSTRUCTION
2. SHALL BE GALVANIZED STEEL WITH ONE PIECE DRAWN VENTURI
3. ONE-PIECE MOTOR/BEARING PLATE ON SIZES 24-36 AND TWO PIECE ON SIZES 42-72
F. DRIVE ASSEMBLY:
1. BELTS, PULLEYS, AND KEYS OVERSIZED FOR A MINIMUM OF 150 PERCENT OF DRIVEN HORSEPOWER
2. BELT: STATIC FREE AND OIL RESISTANT
3. FULLY MACHINED CAST IRON PULLEYS, KEYED AND SECURELY ATTACHED TO THE WHEEL AND MOTOR SHAFTS
4. THE MOTOR PULLEY SHALL BE ADJUSTABLE FOR FINAL SYSTEM BALANCING
5. READILY ACCESSIBLE FOR MAINTENANCE
G. OPTIONS/ACCESSORIES:
1. DAMPERS:
a. TYPE: GREENHECK VCD-23
b. ACTUATOR: HONEYWELL MS4120F1204 IN BELIMO ZS-260 HOUSING. OR EQUAL.
2. WALL HOUSING MOUNTING:
a. FAN PANEL WILL BE MOUNTED VERTICALLY DIRECTING THE AIR HORIZONTALLY INTO THE BUILDING. WALL HOUSING WILL BE MOUNTED IN A MANNER THAT WILL NOT HAVE ANY HOUSING PROTRUDING INSIDE OF THE BUILDING. MOTOR AND DRIVES WILL BE ACCESSIBLE FROM THE EXTERIOR OF THE BUILDING
b. CONSTRUCTED OF GALVANIZED STEEL WITH HEAVY GAUGE MOUNTING FLANGES AND PREPUNCHED MOUNTING HOLES
c. HOUSING SHALL INCLUDE OSHA APPROVED MOTOR GUARD
d. FINAL PRODUCT WILL BE FULLY ASSEMBLED INCLUDING MOTOR, DRIVES, AND PULLEYS
3. WEATHERHOOD:
a. SHALL SHIELD WALL OPENING AND DAMPERS FROM RAIN AND SNOW
b. MATERIAL TYPE: GALVANIZED
c. TURNDOWN ANGLE: 90
d. 1/2 INCH BY 1/2 INCH WELD WIRE BIRDSCREEN
4. FILTER: ALUMINUM MEDIA WITH 2" FORMED ALUMINUM FRAME. DUST SPOT EFFICIENCY: 20.

4.10 TUBE AXIAL INLINE FANS

A. CAPACITIES: SEE HVAC SCHEDULE
B. DISCHARGE POSITION: HORIZONTAL
C. HOUSING: CONTINUOUSLY WELDED STEEL WITH INTEGRAL FLANGES, MOUNTING SYSTEM, INSPECTION DOOR, AND OHSA-COMPLIANT GUARDS.
D. FAN WHEEL
1. AIRFOIL BLADES WITH CONTINUOUSLY WELDED HUBS
2. STATICALLY AND DYNAMICALLY BALANCED TO G6.3 OF ANSI S2.19
E. MOTOR: TEFC NEMA EFFICIENCY MOTOR, CLASS B OR GREATER INSULATION, THERMAL OVERLOAD, VFD-RATED. MIN. 70% EFFICIENCY (<1 HP).
F. BEARINGS: AIR HANDLING QUALITY WITH L-10 OF 80,000 HOURS AT MAXIMUM OPERATING SPEED, ZERK FITTINGS.
G. ACCESSORIES:
1. INLET GUARD
2. OUTLET GUARD
3. UNIVERSAL MOUNTING SUPPORT
4. POLYESTER URETHANE OR EQUAL COATING

4.11 VANE AXIAL INLINE FANS

A. CAPACITIES: SEE HVAC SCHEDULE
B. DISCHARGE POSITION: HORIZONTAL
C. HOUSING: CONTINUOUSLY WELDED STEEL WITH INTEGRAL FLANGES, MOUNTING SYSTEM, INSPECTION DOOR, AND OHSA-COMPLIANT GUARDS.
D. ROTOR BLADES AND HUB TO BE HEAT TREATED CAST ALUMINUM ALLOY A356-T6 OR EQUAL, MANUALLY AJUSTABLE.
E. MOTOR: TEFC NEMA EFFICIENCY MOTOR, CLASS B OR GREATER INSULATION, THERMAL OVERLOAD, VFD-RATED. MIN. 70% EFFICIENCY (<1 HP).
F. BEARINGS: AIR HANDLING QUALITY WITH L-10 OF 80,000 HOURS AT MAXIMUM OPERATING SPEED, ZERK FITTINGS.
G. ACCESSORIES:
1. INLET GUARD
2. OUTLET GUARD
3. UNIVERSAL MOUNTING SUPPORT
4. POLYESTER URETHANE OR EQUAL COATING
5. THRUST RESTRAINTS

4.12 SIDEWALL FANS

B. DESCRIPTION: DIRECT-DRIVEN PROPELLER FANS CONSISTING OF FAN BLADES, HUB, MOTOR, DRIVE ASSEMBLY, AND ACCESSORIES.
C. CAPACITIES: SEE HVAC SCHEDULE
D. HOUSING: GALVANIZED-STEEL SHEET OR ALUMINUM WITH FLANGED EDGES AND INTEGRAL ORIFICE RING WITH BAKED-POLYESTER POWDER COAT FINISH.
E. STEEL FAN WHEELS: HIGH EFFICIENCY, FORMED-STEEL OR ALUMINUM
F. MOTOR: TENV ENCLOSURE, VARIABLE SPEED
G. DRIVE: DIRECT
H. ACCESSORIES:
1. GRAVITY DAMPER
2. OHSA-APPROVED MOTOR SIDE GUARD
3. DAMPER GUARD
4. SPEED CONTROL

4.13 COMBINATION LOUVERS

A. CONTRACTOR SHALL PROVIDE, RECEIVE, STORE, HANDLE, SET IN PENETRATION, FLASH & SEAL, ALIGN, TAG, WIRE AND OTHERWISE INSTALL AND START-UP DAMPERS.
B. PERFORMANCE REQUIREMENTS: SEE HVAC SCHEDULE
C. FRAME SHALL BE 6" DEEP, 0.125" ALUMINUM
D. BLADES SHALL BE 0.081" ALUMINUM
E. AXLES: ½" DIAMETER PLATED STEEL.
F. LINKAGE: PLATED STEEL BRACKETS, BRASS BARRELS, AND 5/16" DIAMETER PLATED STEEL LINKAGE ROD.
G. COATING: ENAMEL
H. STANDARD OF ACCEPTANCE: SEE HVAC SCHEDULE
I. ACCESSORIES:
1. FILTER: WASHABLE ALUMINUM MEDIA WITH 2" FORMED ALUMINUM FRAME MEETING THE REQUIREMENTS OF ASTM F872
2. INSECT SCREEN
3. ACTUATOR: HONEYWELL MS4120F1204 IN BELIMO ZS-260 HOUSING.

4.14 DAMPERS - MOTORIZED

A. CONTRACTOR SHALL PROVIDE, RECEIVE, STORE, HANDLE, SET IN PENETRATION, FLASH & SEAL, ALIGN, TAG, WIRE AND OTHERWISE INSTALL AND START-UP DAMPERS.
B. PERFORMANCE REQUIREMENTS: SEE HVAC SCHEDULE
C. FRAME SHALL BE 5" DEEP, 16 GAUGE GALVANIZED STEEL HAT CHANNEL.
D. BLADES SHALL BE 16 GAUGE GALVANIZED STEEL.
E. SEALS: TPE FASTENED TO EACH BLADE
F. LINKAGE: PLATED STEEL BRACKETS, BRASS BARRELS, AND 5/16" DIAMETER PLATED STEEL LINKAGE ROD.
G. AXLES: ½" DIAMETER PLATED STEEL.
H. COATING: ENAMEL
I. STANDARD OF ACCEPTANCE: SEE HVAC SCHEDULE
J. ACCESSORIES:
1. FILTER: 2" FILTERS WITH FILTER MOUNTS (SUPPLY ONLY).
2. ACTUATOR: HONEYWELL MS4120F1204 IN NEMA 4 HOUSING.

4.15 DAMPERS - BACKDRAFT

A. CONTRACTOR SHALL PROVIDE, RECEIVE, STORE, HANDLE, SET IN PENETRATION, FLASH & SEAL, ALIGN, TAG, WIRE AND OTHERWISE INSTALL AND START-UP DAMPERS.
B. PERFORMANCE REQUIREMENTS: SEE HVAC SCHEDULE
C. FRAME: EXTRUDED ALUMINUM OR GALVANIZED STEEL
D. BLADES: EXTRUDED ALUMINUM OR GALVANIZED STEEL.
E. SEALS: VINYL
F. LINKAGE: PLATED STEEL.
G. STANDARD OF ACCEPTANCE: SEE HVAC SCHEDULE
H. ACCESSORIES:
1. SCREEN (EXTERIOR MOUNTING ONLY)
2. STATIC PRESSURE CONTROL (SUPPLY DAMPERS ONLY)

4.16 SUPPLY GRILLS

A. TYPE: SEE HVAC SHEDULE
B. FRAME: 20 GAUGE STEEL BORDER
C. BLADES: ALUMINUM
D. FINISH: WHITE ANODIC ACRYLIC PAINT
E. MANUFACTURER: TITUS AEROBLADE SERIES
F. ACCESSORIES:
1. TITUS AG-35 DAMPER (WHERE SPECIFIED ON HVAC SCHEDULE)
2. 24" X 24" CEILING MODULE (WHERE SPECIFIED ON HVAC SCHEDULE)

4.17 SUPPLY DIFFUSERS

A. TYPE: SEE HVAC SHEDULE
B. FRAME: 20 GAUGE STEEL BORDER
C. BLADES: ALUMINUM
D. FINISH: WHITE ANODIC ACRYLIC PAINT
E. MANUFACTURER: TITUS TMR/TMS
F. ACCESSORIES:
1. TITUS AG-35 DAMPER (WHERE SPECIFIED ON HVAC SCHEDULE)
2. 24" X 24" CEILING MODULE (WHERE SPECIFIED ON HVAC SCHEDULE)

4.18 RETURN GRILL - LOUVERED

A. TYPE: SEE HVAC SCHEDULE
B. FABRICATION: STEEL BORDER AND ALUMINIM BLADES/CORE
C. FINISH: WHITE ANODIC ACRYLIC PAINT
D. STANDARD OF ACCEPTANCE: TITUS 350ZRL

4.19 RETURN GRILL – AIR FOIL

A. TYPE: SEE HVAC SCHEDULE
B. FABRICATION: STEEL BORDER AND ALUMINIM BLADES/CORE
C. FINISH: WHITE ANODIC ACRYLIC PAINT
D. STANDARD OF ACCEPTANCE: TITUS 25RL

4.20 RETURN GRILL - EGGGRATE

A. TYPE: 1" CORE
B. FABRICATION: 304 STAINLESS STEEL FRAME AND CORE.
C. STANDARD OF ACCEPTANCE: TITUS 50R-SS

4.21 TEMPERATURE SENSOR & TRANSMITTER

A. SENSOR
1. TYPE: RTD
2. CLASS: A
3. TYPE: THIN FILM
4. INSERTION LENGTH: 2"
5. INSERT DIAMETER: ¼"
6. CONNECTION: ½" MALE NPT
7. ELEMENT: PLATINUM
8. HEAD TYPE: INDUSTRIAL
9. HEAD MATERIALS OF CONSTRUCTION: MATCHING TRANSMITTER
10. CONFIGURATION: 3-WIRE
11. HAZARDOUS ENVIRONMENT: CLASS 1, DIVISION 2, GROUP D
C. TRANSMITTER/CONTROLLER
1. CONFIGURATION: TO MATCH SENSOR TYPE
2. UNIT READINGS: USER SELECTABLE – °F OR °C
4. POWER REQUIREMENTS: 24VDC
5. DISPLAY: GRAPHIC LCD/LED.
6. INPUTS: 3-WIRE FROM RTD
6. ANALOG OUTPUTS: 4-20MA
7. OUTPUT RANGE: USER SETTABLE
7. FAILURE MODE: FAIL TO 4-MA OUTPUT.
8. ENCLOSURE: ALUMINUM OR STAINLESS STEEL
9. HAZARDOUS ENVIRONMENT: CLASS 1, DIVISION 2, GROUP D
9. MEMORY BACKUP: ALL USER SETTINGS SHALL BE RETAINED INDEFINITELY IN MEMORY
D. STANDARDS OF ACCEPTANCE:
1. SENSOR: ROSEMOUNT 214CRTSMB1S3E*SLE5*
2. SENSOR: ROSEMOUNT 3144PD1A1E5M5*Q4

ROBERT A. ADAMS REGISTERED NO. 062-054119 STATE OF ILLINOIS PROFESSIONAL ENGINEER
12/20/19
EXP: 11/30/21

REV	DATE	BY	DESCRIPTION
5			
4			
3			
2			
1	10-9-20	RAA	ISSUED FOR CONSTRUCTION

SCALE: NONE
DATE: 12-11-19
DRAWN: JFD
CHECKED: RFC
APPROVED: RAA

ACEng
www.ac-engineering.com
Adams & Christensen Engineering, Inc.
782 Wexford Ct., Grayslake, IL 60030
Illinois Design Firm #184.006676-0002

CLIENT
GREEN ERA SUSTAINABILITY, LLC
ANAEROBIC DIGESTER PROJECT
650 W. 83RD STREET
CHICAGO, IL. 60620

DESCRIPTION
HVAC NOTES & SPECIFICATIONS
EQUIPMENT (2 OF 3)

PROJECT NO:
1019.001

SHEET:
M-705

4.22 SPLIT SYSTEM - CONDENSING UNITS

A. TYPE: SEE HVAC SCHEDULE
B. CAPACITY: SEE HVAC SCHEDULE
C. GENERAL:
   1. CERTIFIED AND RATED IN ACCORDANCE WITH AHRI AND DOE STANDARDS.
   2. CERTIFIED FOR UL 1995.
D. HOUSING
   1. GALVANIZED STEEL.
E. ELECTRICAL: 208/230VAC
F. REFRIGERANT: R410A
G. COMPRESSOR: SCROLL HERMETIC
H. ACCESSORIES.
   1. OUTLET AIR GUIDES
   2. WIND BAFFLES
I. STANDARD OF ACCEPTANCE: TRANE ST SERIES

4.23 SPLIT SYSTEM - AIR HANDLERS

A. TYPE: SEE HVAC SCHEDULE
B. CAPACITY: SEE HVAC SCHEDULE
C. MOUNTING: SEE HVAC SCHEDULE
D. ORIENTATION: HORIZONTAL
E. ELECTRICAL: 208/230VAC, 1 PH
F. REFRIGERANT: R410A
G. EVAPORATIVE COIL
   1. COPPER TUBE, TYPE K, WITH ALUMINUM PLATE FINS.
H. STANDARD OF ACCEPTANCE: TRANE NTYW
I. FILTERS: POLYPROPYLENE HONEYCOMB
J. ACCESSORIES
   1. ELECTRIC HEATERS WHERE IDENTIFIED ON THE HVAC SCHEDULE
   2. DISCHARGE PLENUM AND GRILLES WHERE IDENTIFIED ON THE HVAC SCHEDULE
   3. RETURN GRILLE
   4. STAINLESS STEEL VIBRATION ISOLATORS FOR SUSPENDED INSTALLATION
   5. EXTERNAL DRIP PAN

ROBERT A. ADAMS
REGISTERED
NO.
062-054119
STATE OF
ILLINOIS
PROFESSIONAL ENGINEER
12/20/19
EXP:
11/30/21

REV	DATE	BY	DESCRIPTION
E			
D			
C			
B			
A	10-9-20	RAA	ISSUED FOR CONSTRUCTION

SCALE: NONE
DATE: 12-11-19
DRAWN: JFD
CHECKED: RFC
APPROVED: RAA

ACEng
www.ac-engineering.com
Adams & Christensen Engineering, Inc.
782 Wexford Ct., Grayslake, IL 60030
Illinois Design Firm #184.006676-0002

CLIENT
GREEN ERA SUSTAINABILITY, LLC
ANAEROBIC DIGESTER PROJECT
650 W. 83RD STREET
CHICAGO, IL. 60620

DESCRIPTION
HVAC NOTES & SPECIFICATIONS
EQUIPMENT (3 OF 3)

PROJECT NO:
1019.001

SHEET:
M-706

FAN SCHEDULE

ID	LOCATION	TYPE	QTY	STANDARD		CAPACITY	PRESSURE	RPM	SIZE (IN)		POWER	MOTOR				ACCESSORIES				NOISE	WEIGHT
				MANUFACTURER	MODEL	(CFM)	(IN WC)		FAN	RO	(BHP)	HP	RPM	VOLTAGE	PHASE	HOOD	SCREEN	FILTER	DAMPER	(SONES)	(LBS)
EF-901	SHOP WATER CLOSET CEILING	EXHAUST	1	GREENHECK	SP-A50	84	0.0012	700	6"	--	0.29 (FLA)	18W	--	115	1	YES	--	--	--	0.4	12
EF-941A	MECHANICAL ROOM	EXHAUST	1	GREENHECK	TBI-FS-4H36-200	22,000	1.637	1682 (VAR)	36"	--	16.46	20	1725	460	3	IN & OUT	--	--	--	94dBA	825
EF-952	BELT PRESS AREA	EXHAUST	1	GREENHECK	VAB-36F14-II-300	26,400	3.532	1873 (VAR)	36"	--	25.72	30	1725	460	3	--	--	--	--	95dBA	1618
EF-953	PROCESS ROOM	EXHAUST	1	GREENHECK	VAB-36F14-II-500	33,600	3.861	2160 (VAR)	36"	--	38.15	50	1725	460	3	--	--	--	--	100dBA	1883
EF-960	DOCK PIER WALL	EXHAUST	1	GREENHECK	SE1-10-440VG	288	0.042	724	10"	12 1/2" SQ	0.01	1/6	1725	115	1	--	--	--	--	1.1	42

UNIT HEATER SCHEDULE

ID	LOCATION	TYPE	QTY	MOUNTING	STANDARD		CAPACITY	AIR FLOW	FUEL	ELECTRICAL			THERMOSTAT	EFFICIENCY	MOUNTING	WEIGHT
					MANUFACTURER	MODEL	(BTU/HR)	(CFM)		AMPS	VOLTAGE	PHASE		(%)	HEIGHT	(LBS)
HTR-913	ELECTRICAL ROOM 2	BLUE FLAME	1	WALL OR CEILING	HARTHRITE	HB30TN	30,000	--	NATURAL GAS	--	--	--	MFG. STD.	99%	10'	44
HTR-943	MECHANICAL ROOM	BLUE FLAME	1	WALL OR CEILING	HARTHRITE	HB30TN	30,000	--	NATURAL GAS	--	--	--	MFG. STD.	99%	10'	44
HTR-962	DOCK PIER	BLUE FLAME	1	WALL OR CEILING	HARTHRITE	HB30TN	30,000	--	NATURAL GAS	--	--	--	MFG. STD.	99%	10'	44
HTR-980	FIRE PUMP AREA	BLUE FLAME	1	WALL OR CEILING	HARTHRITE	HB30TN	30,000	--	NATURAL GAS	--	--	--	MFG. STD.	99%	10'	44

AIR HANDLERS

ID	LOCATION	TYPE	QTY	MOUNTING	STANDARD		AIR FLOW				HEATER				ELECTRICAL				WEIGHT
					MANUFACTURER	MODEL	CAPACITY (CFM)	PRESSURE (IN WC)	MOTOR (HP)	SPEED	FUEL	TYPE	CAPACITY (BTU/HR)	EFFICIENCY	MCA/HP	MOP	VOLTAGE	PHASE	(LBS)
MAU-950	PROCESS AREA	MAKE-UP	1	OUTDOOR/GROUND	GREENHECK	DGX-P227-H38-II	29,856	2.51	2 @ 20 HP	CONSTANT	NATURAL GAS	DIRECT FIRE	2,208,000	92%	68.4 MCA	80	460	3	3,779
MAU-951	PROCESS AREA	MAKE-UP	1	OUTDOOR/GROUND	GREENHECK	DGX-P227-H38-II	29,856	2.51	2 @ 20 HP	CONSTANT	NATURAL GAS	DIRECT FIRE	2,208,000	92%	68.4 MCA	80	460	3	3,779
AH-954A-C	PROCESS AREA	INDOOR	3	ROOF/CEILING	GREENHECK	DG-112-H10	4,000	3.14	5 HP	CONSTANT	NATURAL GAS	DIRECT FIRE	259,200	92%	9.8 MCA	15	460	3	605

HEATING AND COOLING UNIT SCHEDULE

ID	LOCATION	TYPE	MANUFACTURER	ROOFTOP MODEL #	HEATER MODEL #	OUTDOOR AIR FLOW (CFM)	INDOOR FAN				HEATING CAPACITY		COOLING CAPACITY				POWER EXHAUST			EFFICIENCY		ELECTRICAL		WEIGHT (LBS)	NOTES
							CAPACITY (CFM)	PRESSURE (IN WC)	SPEED (RPM)	MOTOR SIZE (HP)	(BTU/HR)	(KW)	SENSIBLE (BTU/HR)	TOTAL (BTU/HR)	MIN. TONS REQUIRED	REFRIGERANT TYPE	REFRIGERANT CHARGE	FLOW (CFM)	PRESSURE (IN WC)	MOTOR SIZE (HP)	COOLING	HEATING (COP / %)	VOLTAGE	PHASE		
RTU-900	SHOP OFFICE AREA	RTU - AIR CONDITIONER	TRANE	YHC120F4*LA**K7*A0C0B100CHB00	LOW HEAT	570	3,399	1.23	1,432 (VAR)	2.75 HP (STANDARD)	123,000	36.0	85,250	107,710	10.0	R-410A	12.1 POUNDS	486	0.33	0.87 HP	12.4 EER	80%	460	3	1,647	1, 2, 3, 4, 5, 7

SPLIT SYSTEM AIR CONDITIONERS

CONDENSORS

ID	LOCATION	TYPE	MANUFACTURER	MODEL	RATED CAPACITY (BTU/HR)	COOLING			HEATING		SYSTEM EFF.	ELECTRICAL			WEIGHT (LBS)	NOTES
						SENSIBLE LOAD (BTU/HR)	TOTAL LOAD (BTU/HR)	REFRIGERANT TYPE / CHARGE	TYPE	CAPACITY (BTU/HR)	EFF.	MCA	VOLTAGE	PHASE		
CU-910	ELECTRICAL ROOM 2	SPLIT - OUTDOOR	MITSUBISHI ELECTRIC	NTYSST36A112AA	34,600	32,400	34,600	R-410A / 4 POUNDS	--	--	--	21.0	208/230	1	126	1

AIR HANDLER

ID	LOCATION	TYPE	QTY	MOUNTING	MANUFACTURER	MODEL	CAPACITY			ELECTRICAL			WEIGHT (LBS)	NOTES
							COOLING (BTU/HR)	HEATING (BTU/HR)	AIR FLOW (CFM	MCA	VOLTAGE	PHASE		
AHU-911	ELECTRICAL ROOM 2	SPLIT - INDOOR	1	WALL	MITSUBISHI ELECTRIC	NTYWST36A112AA	34,600	--	389-887	1.00	208/230	1	40	1

HEATING & COOLING NOTES:

1. PROVIDE ONE 7 DAY ELECTRIC PROGRAMMABLE THERMOSTAT IN EACH CONDITIONED ZONE. PROGRAMMED FOR COMPLIANCE WITH SPECIFIED ENERGY EFFICIENCY CODE.
2. HVAC CONTRACTOR TO PROVIDE AND INSTALL A RETURN AIR SMOKE DETECTOR FROM TRANE. DETECTOR SHALL SHUTDOWN THE UNIT IMMEDIATELY UPON DETECTION OF FIRE.
3. HVAC CONTRACTOR TO PROVIDE LOW-LEAK, DRY-BULB ECONOMIZER WITH BAROMETRIC RELIEF DAMPER DIRECT FROM TRANE.
4. HVAC CONTRACTOR TO PROVIDE LOW-LEAK, DRY-BULB ECONOMIZER WITH POWERED EXHAUST DIRECT FROM TRANE.
5. SEE SHEET M-704 FOR SPECIFICATIONS AND ADDITIONAL ACCESSORIES.
6. PROVIDE ONE ZONE CONTROLLER (HONEYWELL HZ432 TRUEZONE PANEL) TO CONTROL INTEGRATION OF THE THERMOSTATS, THE DUCT ZONE DAMPER ACTUATORS, AND THE RTU.
7. REFER TO TRANE PRODUCT CATALOG, PACKAGED ROOFTOP AIR CONDITIONERS, PRECEDENT COOLING AND GAS/ELECTRIC, 3 TO 10 TONS - 60 HZ, RT-PRC023AT-EN, JANUARY 2020 FOR ADDITIONAL INFORMATION.
8. REFER TO TRANE PRODUCT CATALOG, PACKAGED ROOFTOP AIR CONDITIONERS, VOYAGER COMMERCIAL WITH RELIATEL CONTROLS INCLUDING ESTAGE, 27 1/2 TO 50 TONS - 60 HZ, RT-PRC033L-EN, MAY 2019 FOR ADDITIONAL INFORMATION.

GENERAL NOTES:

1. CAPACITY LISTED IS FOR EACH UNIT.
2. SEE SHEET M-700 UP TO M-709 FOR SPECIFICATIONS AND ADDITIONAL ACCESSORIES.
3. AIR HANDLERS WITH HEATING EACH TO HAVE DEDICATED THERMOSTAT.

ROBERT A. ADAMS
REGISTERED
NO.
062-054119
STATE OF
ILLINOIS
PROFESSIONAL ENGINEER
12/20/19
EXP:
11/30/21

REV	DATE	BY	DESCRIPTION
E			
D			
C			
B			
A	10-9-20	RAA	ISSUED FOR CONSTRUCTION

SCALE: NONE
DATE: 12-11-19
DRAWN: JFD
CHECKED: RFC
APPROVED: RAA

ACEng
www.ac-engineering.com
Adams & Christensen Engineering, Inc.
782 Wexford Ct., Grayslake, IL 60030
Illinois Design Firm #184.006676-0002

CLIENT
GREEN ERA SUSTAINABILITY, LLC
ANAEROBIC DIGESTER PROJECT
650 W. 83RD STREET
CHICAGO, IL. 60620

DESCRIPTION
HVAC SCHEDULES
(1 OF 2)

PROJECT NO:
1019.001

SHEET:
M-710

MOTORIZED DAMPER SCHEDULE

ID	LOCATION	TYPE	QTY	STANDARD		SIZE (IN. X IN.)	PERFORMANCE		MAX. DIFF. PRESSURE (" WC)	ACTUATOR				ACCESSORIES	
				MANUFACTURER	MODEL		FREE AREA (FT^2)	AIR FLOW (CFM)		QTY	STANDARD MANUFACTURER	STANDARD MODEL	VOLTAGE	SCREEN	FILTER
ED-941A	MECHANICAL ROOM / EF-941	EXHAUST	1	GREENHECK	VCD-23	42" x 42"	12.25	22,000	0.048	1	HONEYWELL	MS4120F1204	120VAC	BIRD	YES

COMBINATION LOUVER SCHEDULE

ID	LOCATION	TYPE	QTY	STANDARD		SIZE (IN. X IN.)	PERFORMANCE			MAX. DIFF. PRESSURE (" WC)	ACTUATOR				ACCESSORIES	
				MANUFACTURER	MODEL		FREE AREA (FT^2)	AIR FLOW (CFM)	VELOCITY (FPM)		QTY	STANDARD MANUFACTURER	STANDARD MODEL	VOLTAGE	SCREEN	FILTER
SD-942A	MECHANICAL ROOM	SUPPLY	1	GREENHECK	EACA-601	82" X 90"	27.49	22,000	800	0.070	2	HONEYWELL	MS4120F1204	120VAC	INSECT	YES
SD-961	DOCK PIER WALL	SUPPLY	1	GREENHECK	EACA-601	18" X 18"	0.58	288	497	0.03	1	HONEYWELL	MS4120F1204	120VAC	INSECT	YES

BACKDRAFT DAMPER SCHEDULE

ID	LOCATION	TYPE	QTY	STANDARD		SIZE (IN. X IN.)	FLANGE	SCREEN	AIR FLOW (CFM)	MAX. DIFF. PRESSURE (" WC)	STATIC PRESSURE CONTROL
				MANUFACTURER	MODEL						
GD-941A	MECHANICAL ROOM / EF-941	EXHAUST	1	GREENHECK	WD-110	42" x 42"	DISCHARGE	BIRD	22,000	0.717	--

SUPPLY REGISTERS/GRILLS/DIFFUSERS

ID	LOCATION	QUANTITY	MANUFACTURER	MODEL	TYPE	SIZE (IN. X IN.) OR (IN. DIA.)	AIR FLOW (CFM)	NOTES
SR-900	MAINTENANCE ROOM	3	TITUS	271RL	3/4" SINGLE AIR FOIL	18" X 6"	419	1, 2
SR-901	CENTER OFFICE	3	TITUS	TMR	ROUND CEILING DIFFUSER	10"	267	1, 2
SR-902	ELECTRICAL ROOM 1	3	TITUS	112RL	1 1/4" DOUBLE AIR FOIL	18" X 6"	419	1, 2
SR-903	SHOP WATER CLOSET	1	TITUS	TMR	ROUND CEILING DIFFUSER	6"	84	1, 2
SR-950	PROCESS ROOM	6	TITUS	121RS	2" SINGLE AIR FOIL	34" X 46"	9,952	1, 2
SR-954	PROCESS ROOM	3	TITUS	121RS	2" SINGLE AIR FOIL	18" X 36"	4,000	1, 2
RETURN GRILLES								
ID	LOCATION	QUANTITY	MANUFACTURER	MODEL	TYPE	SIZE (IN. X IN.) OR (IN. DIA.)	AIR FLOW (CFM)	NOTES
RG-900	MAINTENANCE ROOM	3	TITUS	25RL	AIR FOIL	12" X 10"	419	2
RG-901	SHOP OFFICE	1	TITUS	350ZRL	LOUVERED	14" X 14"	801	2
RG-902	ELECTRICAL ROOM 1	3	TITUS	25RL	AIR FOIL	12" X 10"	419	2
RG-952	BELT PRESS AREA	4	TITUS	50R-SS	1" EGGCRATE	30" X 30"	6,600	1, 2
RG-953	PROCESS ROOM	4	TITUS	50R-SS	1" EGGCRATE	48" X 24"	8,400	1, 2

REGISTER/GRILL NOTES:

1. SUPPLY AND INSTALL (DUCT MOUNTED) ONE TITUS AG-35 BUTTERFLY DAMPER.
2. THE CFM SPECIFIED IS PER REGISTER, GRILLE, DIFFUSER, DAMPER, OR LOUVER.
3. SUPPLY AND INSTALL 24" X 24" CEILING MODULE.

GENERAL NOTES:

1. CAPACITY LISTED IS FOR EACH UNIT.
2. SEE SHEET M-700 UP TO M-709 FOR SPECIFICATIONS AND ADDITIONAL ACCESSORIES.

ROBERT A. ADAMS REGISTERED NO. 062-054110 STATE OF ILLINOIS PROFESSIONAL ENGINEER
12/20/19
EXP: 11/30/21

REV	DATE	BY	DESCRIPTION
E			
D			
C			
B			
A	10-9-20	RAA	ISSUED FOR CONSTRUCTION

SCALE: NONE
DATE: 12-11-19
DRAWN: JFD
CHECKED: RFC
APPROVED: RAA

ACEng
www.ac-engineering.com
Adams & Christensen Engineering, Inc.
782 Wexford Ct., Grayslake, IL 60030
Illinois Design Firm #184.006676-0002

CLIENT
GREEN ERA SUSTAINABILITY, LLC
ANAEROBIC DIGESTER PROJECT
650 W. 83RD STREET
CHICAGO, IL. 60620

DESCRIPTION
HVAC SCHEDULES
(2 OF 2)

PROJECT NO:
1019.001

SHEET:
M-711

ROOM #	ROOM NAME	ROOM USE	FLOOR AREA	OURDOOR AIR				RECIRCULATION AIR	MECHANICAL EQUIPMENT			NOTES
				ORDINANCE REQUIREMENTS[1]		ACTUAL OUTDOOR AIR PROVIDED			SUPPLY	EXHAUST	RECIRCULATION	
				SUPPLY	EXHAUST	SUPPLY	EXHAUST					
			(SF)	(CFM)	(CFM)	(CFM)	(CFM)	(CFM)				
1.1	SHOP WC	TOILET ROOM	42	0	84	84	84	0	RTU-900	EF-901	--	
1.2	OFFICE	OFFICES & COMPUTER ROOMS	163	98	49	98	98	801	RTU-900	RTU-900	RTU-900	RTU-900 POWER EXHAUST AT 0.87 HP.
1.3	ELECTRICAL ROOM 1	STORAGE, INACTIVE	634	0	0	76	76	1,257	RTU-900	RTU-900	RTU-900	RTU-900 POWER EXHAUST AT 0.87 HP.
1.4	MAINTENANCE ROOM	WORKSHOP	260	312	312	312	312	1,257	RTU-900	RTU-900	RTU-900	RTU-900 POWER EXHAUST AT 0.87 HP.
3	ELECTRICAL ROOM 2	STORAGE, INACTIVE	549	0	0	0	0	887	--	--	AHU-911	
4	MECHANICAL ROOM	MECHANICAL ROOM	810	405	0	22,000	22,000	0	SD-942A	EF-941A	--	
5.1	DOCK PIER	STORAGE ACTIVE	450	225	225	288	288	0	SD-961	EF-360	--	
5.2	PROCESS ROOM	GARAGE, 6 OR MORE CARS	37,675	28,256	37,675	60,000	60,000	12,000	MAU-950 MAU-951	EF-952 EF-953	AH-954A AH-954B AH-954C	ROOM IS A RECEIVING AND UNLOADING AREA. TREAT AS GARAGE DUE TO VEHICLES ENTERING TO UNLOAD.

NOTES
1. VALUES ARE FROM TABLE 18-28-403.3 UNLESS NOTED OTHERWISE.

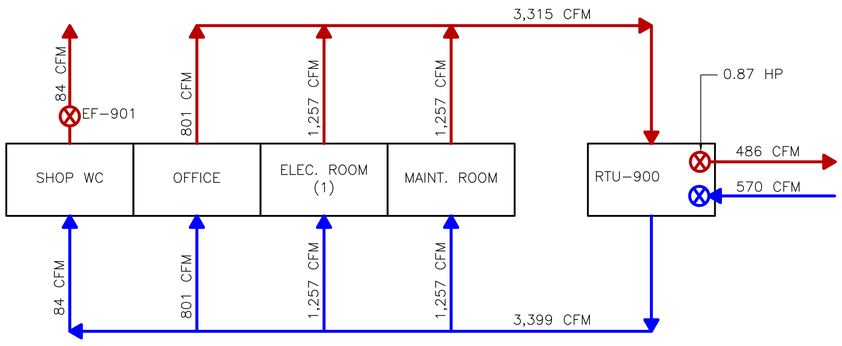

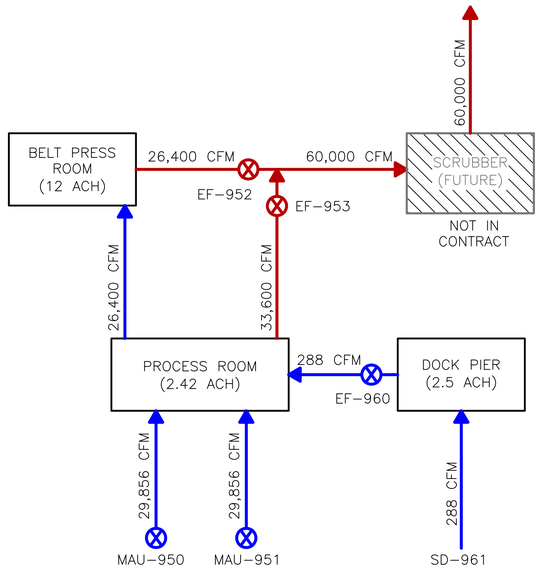

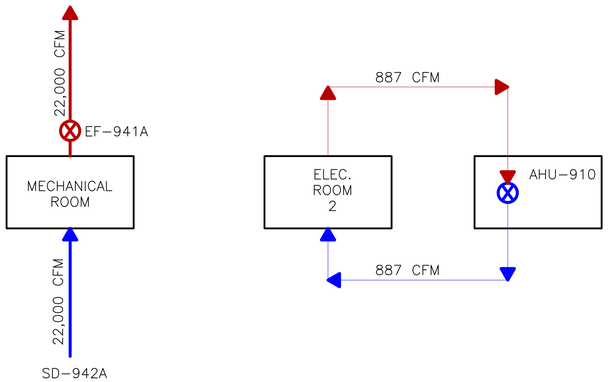

LEGEND:

VAV

FAN

ROBERT A. ADAMS REGISTERED NO. 062-054119 STATE OF ILLINOIS PROFESSIONAL ENGINEER
12/20/19
EXP: 11/30/21

REV	DATE	BY	DESCRIPTION
5			
4			
3			
2			
1	10-9-20	RAA	ISSUED FOR CONSTRUCTION

SCALE: NONE
DATE: 12-17-19
DRAWN: JFD
CHECKED: RFC
APPROVED: RAA

ACEng
www.ac-engineering.com
Adams & Christensen Engineering, Inc.
782 Wexford Ct., Grayslake, IL 60030
Illinois Design Firm #184.006676-0002

CLIENT
GREEN ERA SUSTAINABILITY, LLC
ANAEROBIC DIGESTER PROJECT
650 W. 83RD STREET
CHICAGO, IL. 60620

DESCRIPTION
BUILDING VENTILATION SCHEMATIC

PROJECT NO:
1019.001

SHEET:
M-720

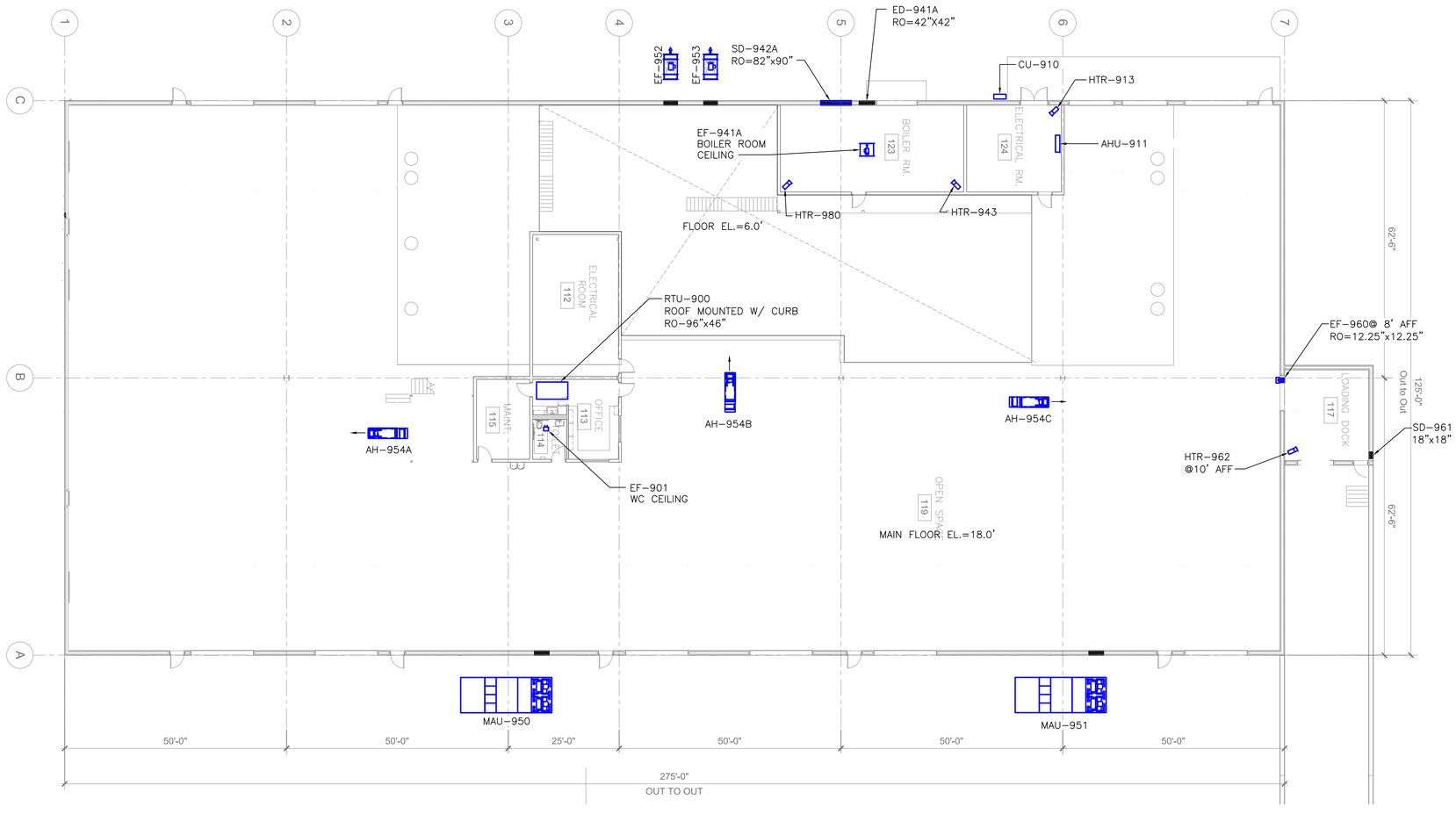

PLAN VIEW

0' 15' 30'

SCALE: 1"=15'

ROBERT A. ADAMS
REGISTERED
NO.
062-054119
STATE OF
ILLINOIS
PROFESSIONAL ENGINEER

12/20/19
EXP:
11/30/21

REV	DATE	BY	DESCRIPTION
E			
D			
C			
B			
A	10-9-20	RAA	ISSUED FOR CONSTRUCTION

SCALE: AS SHOWN
DATE: 11-5-18
DRAWN: JFD
CHECKED: RFC
APPROVED: RAA

ACEng
www.ac-engineering.com
Adams & Christensen Engineering, Inc.
782 Wexford Ct., Grayslake, IL 60030
Illinois Design Firm #184.006676-0002

CLIENT

GREEN ERA SUSTAINABILITY, LLC
ANAEROBIC DIGESTER PROJECT
650 W. 83RD STREET
CHICAGO, IL. 60620

DESCRIPTION

HVAC EQUIPMENT LOCATIONS

PROJECT NO:
1019.001

SHEET:
M-800

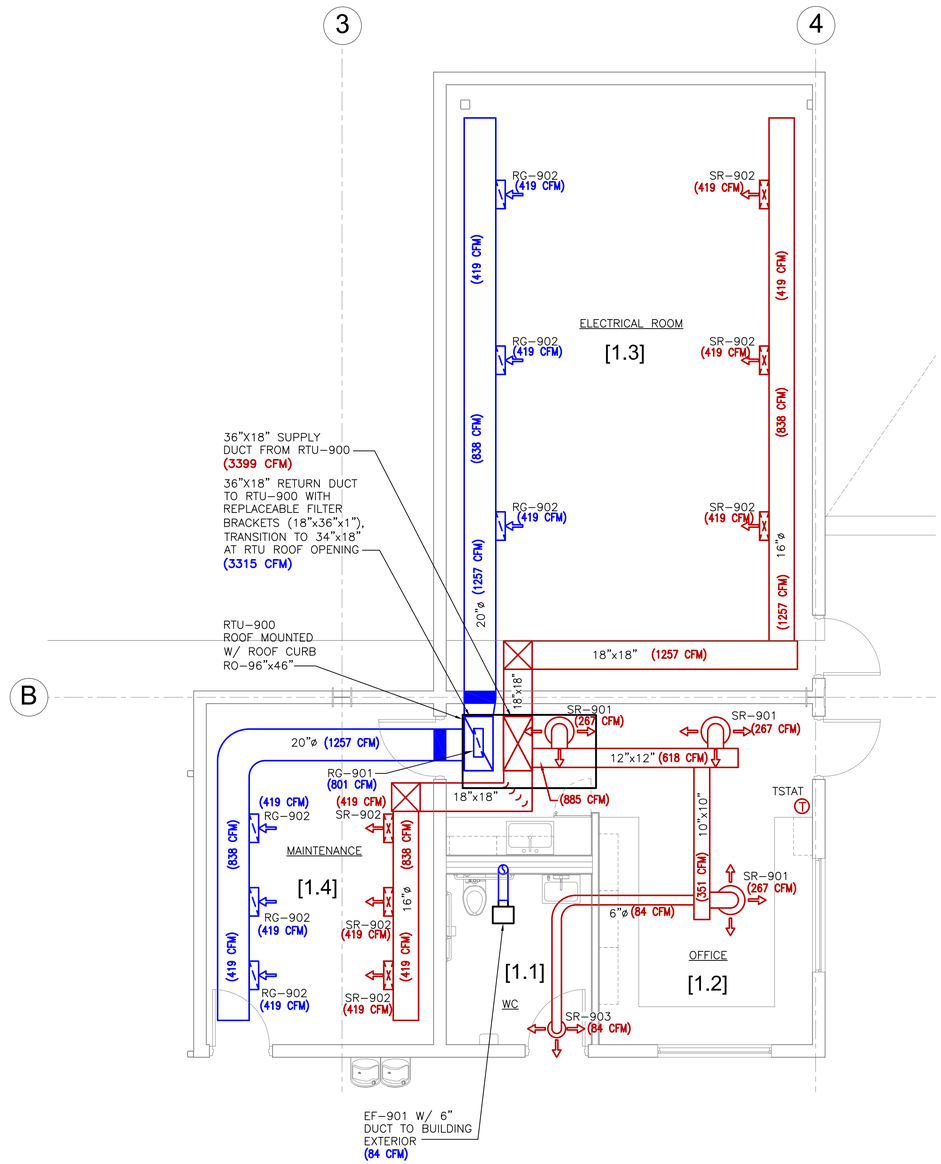

PLAN VIEW

0' 2' 4' 8'

SCALE: 1"=4'

(xxxx CFM)
(xxxx CFM)
CFM VALUES ADDED TO SUPPLY & RETURN

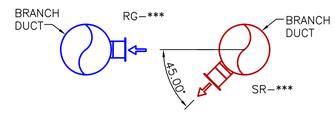

REGISTER & GRILL ORIENTATION

N.T.S.

NOTES:
1. SEE SUPPLY REGISTER/DIFFUSER AND RETURN GRILL SCHEDULES ON SHEET M-711 FOR SIZES AND AIR FLOWS FROM EACH ITEM.
2. SEE SHEET M-720 FOR AIR FLOW RATES TO EACH ROOM/AREA.
3. FINISHED FLOOR ELEVATION = 18.0'.

ROBERT A. ADAMS REGISTERED NO. 062-054119 STATE OF ILLINOIS PROFESSIONAL ENGINEER 12/20/19 EXP: 11/30/21

REV	DATE	BY	DESCRIPTION
4			
3			
2			
1			
A	10-9-20	RAA	ISSUED FOR CONSTRUCTION

SCALE: AS SHOWN
DATE: 11-5-18
DRAWN: JFD
CHECKED: RFC
APPROVED: RAA

ACEng
www.ac-engineering.com
Adams & Christensen Engineering, Inc.
782 Wexford Ct., Grayslake, IL 60030
Illinois Design Firm #184.006676-0002

CLIENT
GREEN ERA SUSTAINABILITY, LLC
ANAEROBIC DIGESTER PROJECT
650 W. 83RD STREET
CHICAGO, IL. 60620

DESCRIPTION
DUCT PLAN - CENTER ROOMS

PROJECT NO: 1019.001

SHEET: M-811

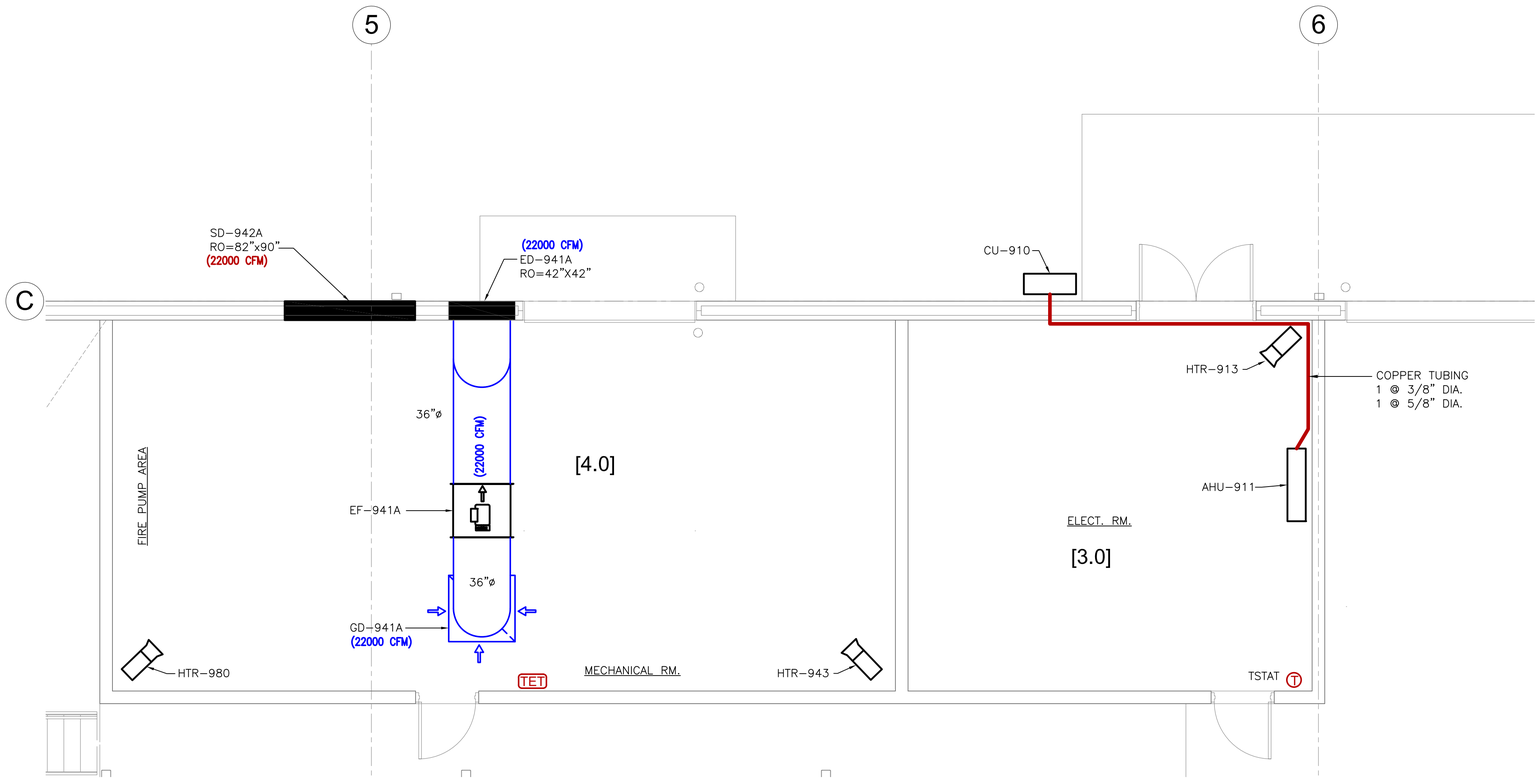

PLAN VIEW

0' 2' 4' 8'

SCALE: 1"=4'

(xxxx CFM)
(xxxx CFM)
CFM VALUES ADDED TO SUPPLY & RETURN/EXHAUST

NOTES:
1. TET: RTD-BASE TEMPERATURE ELEMENT & TRANSMITTER.
2. SEE SUPPLY REGISTER/DIFFUSER AND RETURN GRILL SCHEDULES ON SHEET M-711 FOR SIZES AND AIR FLOWS FROM EACH ITEM.
3. SEE SHEET M-720 FOR AIR FLOW RATES TO EACH ROOM/AREA.
4. FINISHED FLOOR ELEVATION = 18.0'.

ROBERT A. ADAMS REGISTERED NO. 062-054113 STATE OF ILLINOIS PROFESSIONAL ENGINEER 12/20/19 EXP: 11/30/21

REV	DATE	BY	DESCRIPTION
E			
D			
C			
B			
A	10-9-20	RAA	ISSUED FOR CONSTRUCTION

SCALE: AS SHOWN
DATE: 11-5-18
DRAWN: JFD
CHECKED: RFC
APPROVED: RAA

ACEng
www.ac-engineering.com
Adams & Christensen Engineering, Inc.
782 Wexford Ct., Grayslake, IL 60030
Illinois Design Firm #184.006676-0002

CLIENT
GREEN ERA SUSTAINABILITY, LLC
ANAEROBIC DIGESTER PROJECT
650 W. 83RD STREET
CHICAGO, IL. 60620

DESCRIPTION
DUCT PLAN – MECHANICAL ROOM & ELECTRICAL ROOM 2

PROJECT NO:
1019.001

SHEET:
M-812

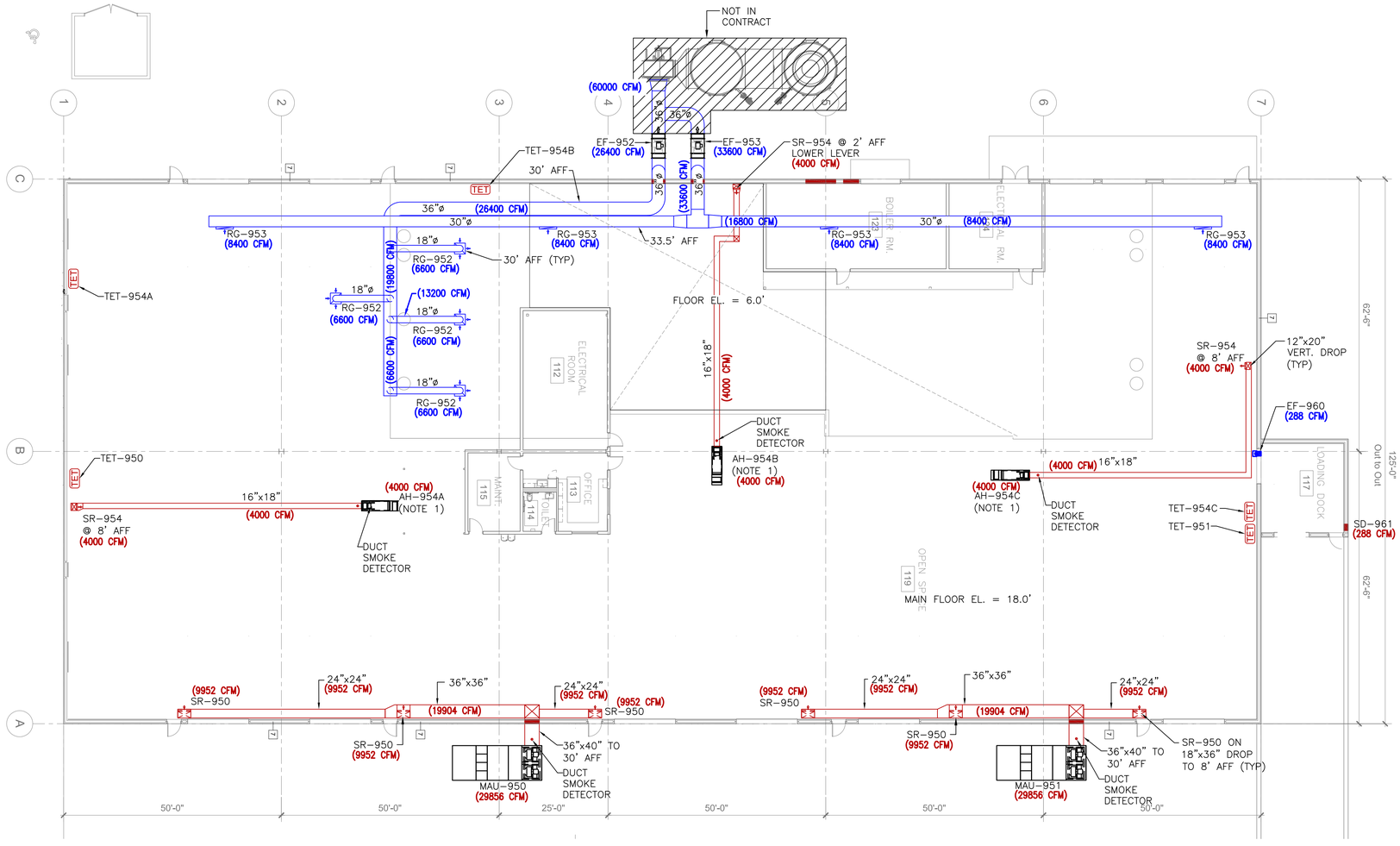

PLAN VIEW

0' 15' 30'

SCALE: 1"=15'

(xxxx CFM)
(xxxx CFM)
CFM VALUES ADDED TO SUPPLY & RETURN/EXHAUST

NOTES:
1. MOUNT AH-954X AS CLOSE TO CEILING AS POSSIBLE, RUN DUCT AS HIGH AS POSSIBLE TO SIDE WALL THEN DOWN TO 8' AFF. AH-954B DUCT GOES DOWN TO 2'AFF IN THE LOWER LEVEL/BASEMENT.
2. TET: RTD-BASE TEMPERATURE ELEMENT & TRANSMITTER.
3. SEE SUPPLY REGISTER/DIFFUSER AND RETURN GRILL SCHEDULES ON SHEET M-711 FOR SIZES AND AIR FLOWS FROM EACH ITEM.
4. SEE SHEET M-720 FOR AIR FLOW RATES TO EACH ROOM/AREA.

ROBERT A. ADAMS REGISTERED NO. 062-054119 STATE OF ILLINOIS PROFESSIONAL ENGINEER
12/20/19
EXP: 11/30/21

REV	DATE	BY	DESCRIPTION
E			
D			
C			
B			
A	10-9-20	RAA	ISSUED FOR CONSTRUCTION

SCALE:	AS SHOWN
DATE:	11-5-18
DRAWN:	JFD
CHECKED:	RFC
APPROVED:	RAA

ACEng
www.ac-engineering.com
Adams & Christensen Engineering, Inc.
782 Wexford Ct., Grayslake, IL 60030
Illinois Design Firm #184.006676-0002

CLIENT
GREEN ERA SUSTAINABILITY, LLC
ANAEROBIC DIGESTER PROJECT
650 W. 83RD STREET
CHICAGO, IL. 60620

DESCRIPTION
DUCT PLAN - PROCESS AREA

PROJECT NO: 1019.001

SHEET: M-813

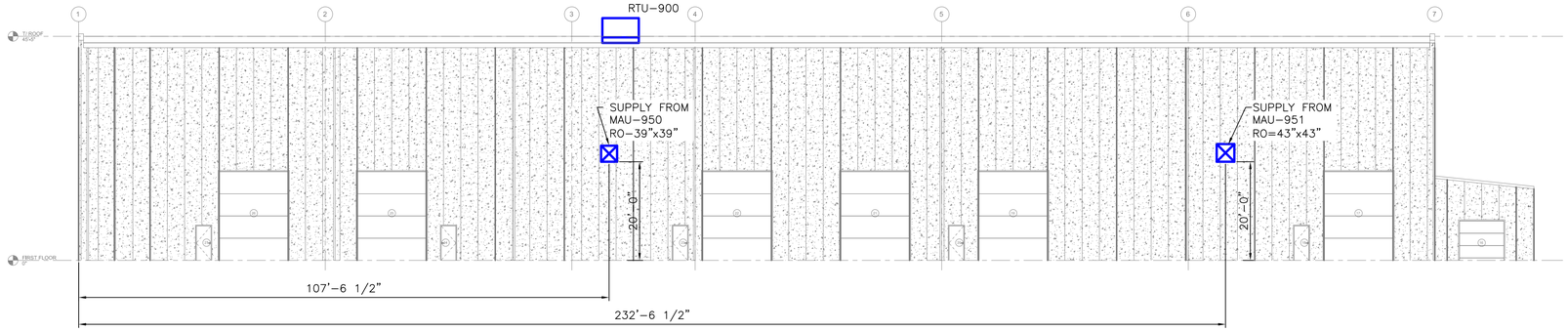

EAST ELEVATION

0' 15' 30'

SCALE: 1"=15'

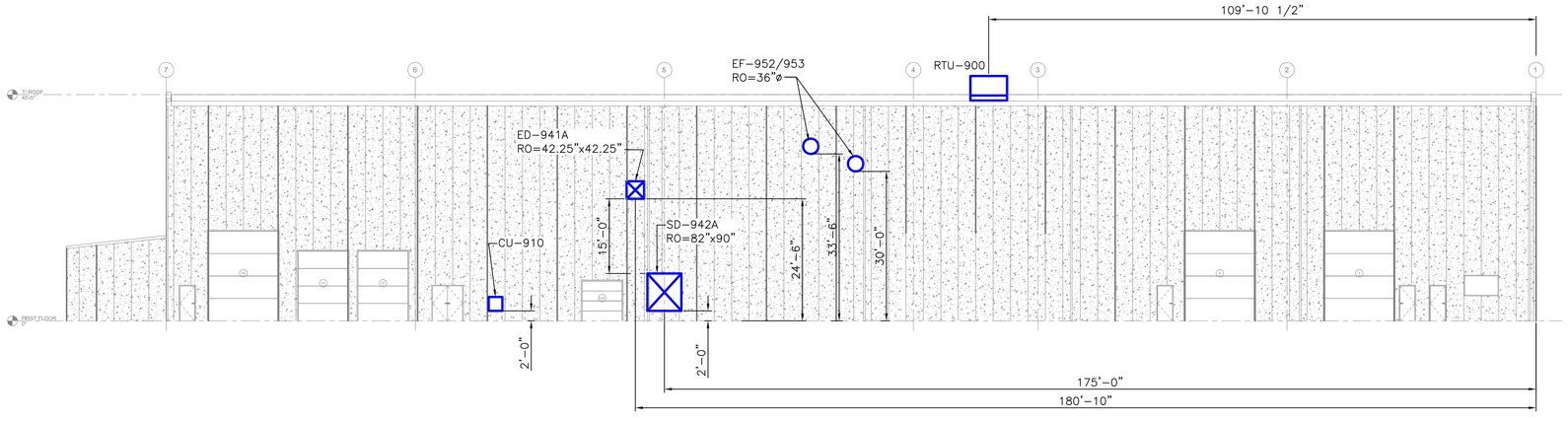

WEST ELEVATION

0' 15' 30'

SCALE: 1"=15'

ROBERT A. ADAMS
REGISTERED
NO.
062-054119
STATE OF
ILLINOIS
PROFESSIONAL ENGINEER
12/20/19
EXP:
11/30/21

REV	DATE	BY	DESCRIPTION
E			
D			
C			
B			
A	10–9–20	RAA	ISSUED FOR CONSTRUCTION

SCALE:	AS SHOWN
DATE:	12–11–19
DRAWN:	JFD
CHECKED:	RFC
APPROVED:	RAA

ACEng
www.ac–engineering.com

Adams & Christensen Engineering, Inc.
782 Wexford Ct., Grayslake, IL 60030
Illinois Design Firm #184.006676–0002

CLIENT

GREEN ERA SUSTAINABILITY, LLC
ANAEROBIC DIGESTER PROJECT
650 W. 83RD STREET
CHICAGO, IL. 60620

DESCRIPTION

HVAC ELEVATIONS (1 OF 2)

PROJECT NO:
1019.001

SHEET:
M–820

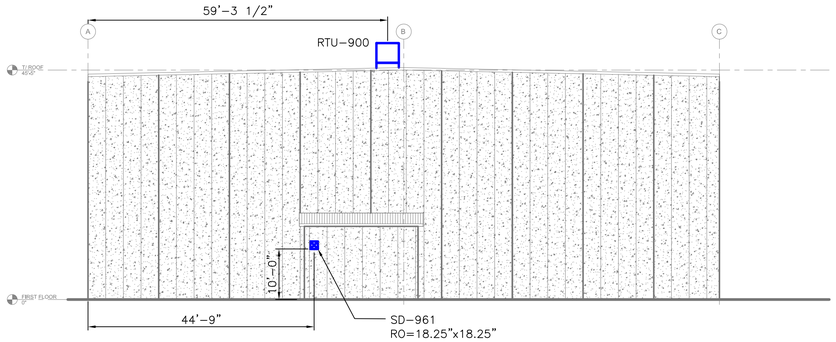

NORTH ELEVATION

0' 15' 30'

SCALE: 1"=15'

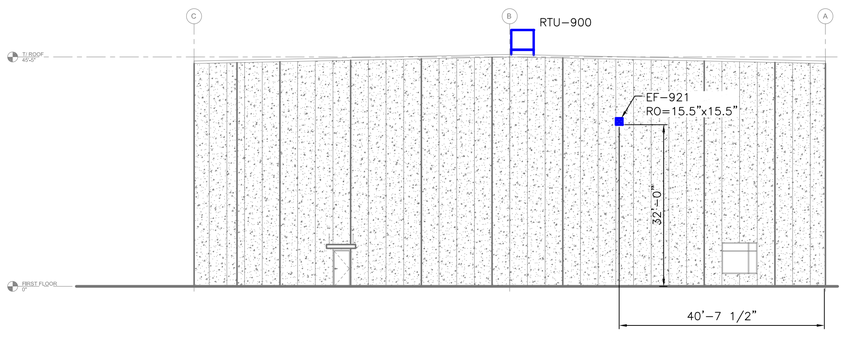

SOUTH ELEVATION

0' 15' 30'

SCALE: 1"=15'

ROBERT A. ADAMS
REGISTERED
NO.
062-054119
STATE OF
ILLINOIS
PROFESSIONAL ENGINEER

12/20/19
EXP:
11/30/21

REV	DATE	BY	DESCRIPTION
E			
D			
C			
B			
A	10-9-20	RAA	ISSUED FOR CONSTRUCTION

SCALE:	AS SHOWN
DATE:	10-20-18
DRAWN:	JFD
CHECKED:	RFC
APPROVED:	RAA

ACEng
www.ac-engineering.com
Adams & Christensen Engineering, Inc.
782 Wexford Ct., Grayslake, IL 60030
Illinois Design Firm #184.006676-0002

CLIENT

GREEN ERA SUSTAINABILITY, LLC
ANAEROBIC DIGESTER PROJECT
650 W. 83RD STREET
CHICAGO, IL. 60620

DESCRIPTION

HVAC ELEVATIONS (2 OF 2)

PROJECT NO:
1019.001

SHEET:
M-821

ODOR CONTROL (MP-08) APPENDIX D
FORMS

Green Era	**Odor Observation Form**	FORM-21-003 Revision: 0 Effective: 10/02/21 Reviewed: 10/02/21

Print hard copies or complete on a mobile tablet using a PDF form.

Scan in any hard copies. Save scanned copies or electronic forms to Green Era cloud storage. Retain scanned copy for at least 36 months.

References:

1. MP-08 Odor Control Plan
2. MP-09 Odor Monitoring and Surveillance Plan

Green Era

Odor Observation Form

Observer Name: _____ Date: _____

Weather Conditions	Clear	Partly Cloudy	Mostly Cloudy	Overcast	Hazy
Precipitation	None	Fog	Rain	Sleet	Snow
Direction Wind is From	N	NW	W	SW	S	SE	E	NE
Wind Speed	Calm	1-5 MPH	5-15 MPH	15 - higher

Temperature: _____ °F Relative Humidity: _____ % Barometric Pressure: _____ Inches Hg

Is a printout of weather data attached? _____ Weather data source? _____

Odor Wheel Descriptors:

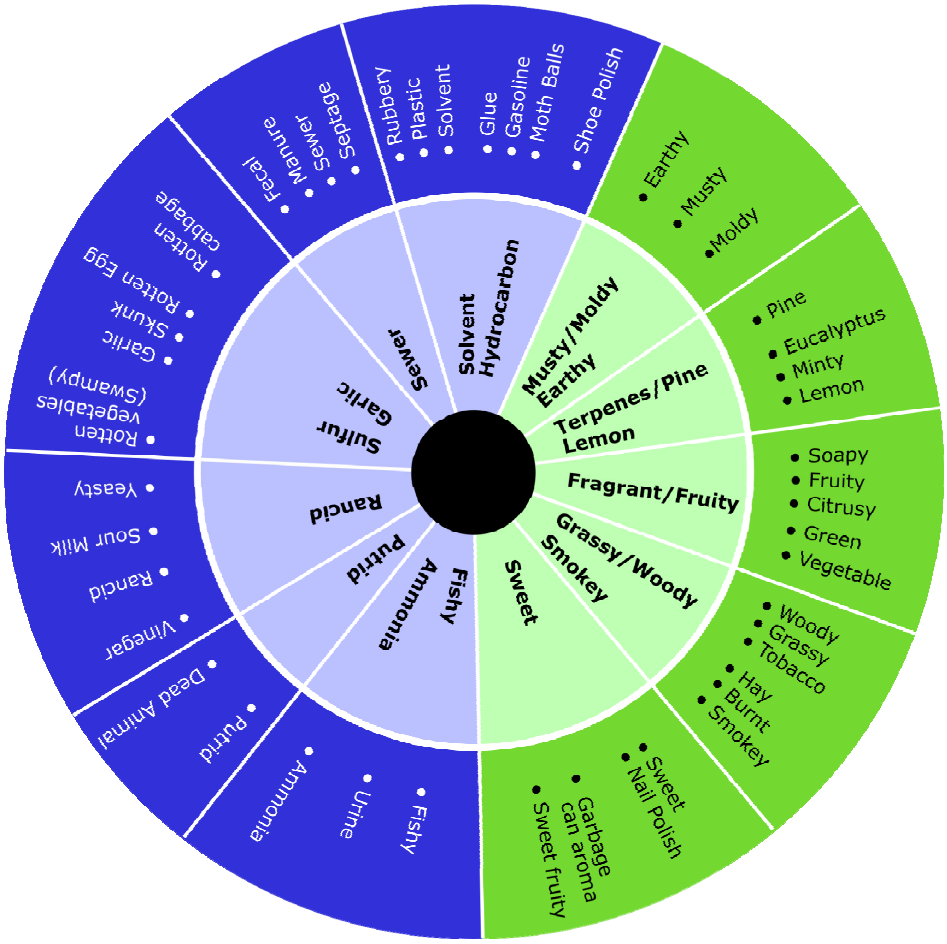

Odor Observation Form

Location: _____ Time: _____

Duration: _____ Dilution Threshold (D/T): _____ Source: _____

Notes:

Location: _____ Time: _____

Duration: _____ Dilution Threshold (D/T): _____ Source: _____

Notes:

Location: _____ Time: _____

Duration: _____ Dilution Threshold (D/T): _____ Source: _____

Notes:

Odor Observation Form

Location: _____ Time: _____

Duration: _____ Dilution Threshold (D/T): _____ Source: _____

Notes:

Location: _____ Time: _____

Duration: _____ Dilution Threshold (D/T): _____ Source: _____

Notes:

Location: _____ Time: _____

Duration: _____ Dilution Threshold (D/T): _____ Source: _____

Notes:

Odor Observation Form

Location: _____ Time: _____

Duration: _____ Dilution Threshold (D/T): _____ Source: _____

Notes:

Location: _____ Time: _____

Duration: _____ Dilution Threshold (D/T): _____ Source: _____

Notes:

Location: _____ Time: _____

Duration: _____ Dilution Threshold (D/T): _____ Source: _____

Notes:

Green Era	**Odor Complaint Form**	FORM-21-004 Revision: 0 Effective: 10/02/21 Reviewed: 10/02/21

Print hard copies or complete on a mobile tablet or laptop computer using a PDF form.

Scan in any hard copies. Save scanned copies or electronic forms to Green Era cloud storage. Retain scanned copy for at least 36 months.

References:

1. MP-08 Odor Control Plan
2. MP-09 Odor Monitoring and Surveillance Plan

Green Era

Odor Complaint Form

Investigator Name: _____ Log Date: _____

Complaint Information

Date Observed _____ Time first observed: _____

Is the odor noticeable now? Yes No

Duration

Intermittent	Less than 15 Min	Less than 30 Min	Less than 1 hour
Less than 4 hours	Less than 8 hours	Less than 1 day	Multiple Days

Where do you notice the odor?

Outdoors	Indoors windows closed	Indoors windows open
On roadway		

Odor Intensity Scale

	1	Odor characteristics may or may not be distinguished and/or definite, but not objectionable in short durations. This is characterized by occasional “whiffs” of odor, but is not persistent.
	2	Odor is very distinct and clearly distinguishable, tends to be objectionable and/or irritating, and is persistent in the community.
	3	Odor present in the air, which is objectionable and causes a person to attempt to avoid it completely.
	4	Odor present in the air, which is so strong that it is overpowering and intolerable for any length of time.

Description of odor in observer’s words

Odor Complaint Form

Location Details as available

House Number: _____

Street Name: _____

GPS: _____ _____
Latitude Longitude

Observer contact Information

Name:	
Street Address:	
Preferred Phone:	
E-mail:	

Report weather data for the time/date when the odor was observed.

Weather Conditions	Clear	Partly Cloudy	Mostly Cloudy	Overcast	Hazy			
Precipitation	None	Fog	Rain	Sleet	Snow			
Direction Wind is From	N	NW	W	SW	S	SE	E	NE
Wind Speed	Calm	1-5 MPH	5-15 MPH	15 - higher				

Temperature: _____ °F Relative Humidity: _____ % Barometric Pressure: _____ Inches Hg

Is a printout of weather data attached? _____ Weather data source? _____

Investigator Comments (list expected odor source and any abnormal operating conditions)

ODOR CONTROL (MP-08) APPENDIX E
LOGS

Green Era	Personnel Training Log	LOG-21-001 Revision: 0 Effective: 10/02/21 Reviewed: 10/02/21

The following employees have received the necessary initial training or annual refresher training per 35 IAC 830.210(a-b).

Training topic/description: _____

List Training Documents or attach agenda of covered materials (IE SOP-21-001) _____

Name	Signature	Date of Training	Number of Hours

CERTIFICATION

Name: _____ Signature: _____

Title: _____ Date: _____

All records must be maintained for a minimum of 3-years. Electronic copies are permissible.

Scan after certifying and save to Green Era's cloud storage. Original can be destroyed.

Green Era

Odor Complaint Log

Doc. No. LOG-21-005

No.	Log Date	Odor Date	Instensity	Expected Source (name emission point and emission type)	Abnormal Operating Conditions	Distance from plant	Notifed by

Green Era

Air Emissions Methane Venting Log

Doc. No. LOG-21-007

										Weather						
Venting From (TAG NO)	**Venting From (description)**	**Beginning Date/Time**	**Ending Date/Time**	**Duration (HH:MM:SS)**	**H2S Reading (PPMv)**	**Date/Time of H2S sample**	**CH4 Reading**	**Date/Time of CH4 sample**	**Prevailing Wind Dir.**	**Wind Speed**	**Temperature**	**Precip.**	**Odor Complaints**	**Reason for event**	**Notes**
T-105, PSV-105B	Groth pressure relief vent on the digester	10/1/21 14:25	10/1/21 14:38	0:13:00	420	10/1/2021 6:00	62.5%	10/1/2021 14:00	273°	10 to 25	67°	Heavy Rain/Thunderstorm	No	Mains Power loss	Example Entry: Main breaker trip due to external voltage spike. Reset breaker and reconnected to Grid. lightning in the area. Voltage shunts in main cabinet show that they are still okay.
T-105, PSV-105B	Groth pressure relief vent on the digester	10/1/21 14:45	10/1/21 15:05	0:20:00	420	10/1/2021 6:00	62.5%	10/1/2021 14:00	273°	10 to 15	67°	Light Rain	No	Flare faulted.	Example Entry: CC fuse was blown on mains at I/O cabinet. Replaced fuse.

Green Era

Air Emissions Control Equipment Maintenance (downtime) Log

Doc. No. LOG-21-008

Equipment (TAG NO)	Equipment Name (description)	Beginning Date/Time	Ending Date/Time	Duration (HH:MM:SS)	Prevailing Wind Dir.	Wind Speed	Temperature	Weather Precip.	Odor Complaints	Reason for event	Notes
W-038	Carbon bed booster blower, main building exhaust	10/1/21 19:25	10/1/21 20:38	1:13:00	273°	10 to 25	58°	None. Clear skies	No	Inspect blower belts. Replaced 4 belts and retensioned.	Example Entry: Building exhaust fans were shutdown during this maintenance period.
S-036	Outdoor Ionizer Bank	10/21/21 11:03	10/21/21 14:25	3:22:00	280°	3 to 5	52°	light rain	No	Control network to ionizers was interrupted	Example Entry: Fault showed on SCADA that the control panel lost communication. Network switch port was found to have failed. Moved network cable to working port.

ATTACHMENT 18
CHICAGO PUBLIC SCHOOL'S PERMISSION LETTER

Chicago Public Schools

LOOP OFFICE
DEPARTMENT OF CAPITAL PLANNING & CONSTRUCTION
42 W Madison St., 2nd Floor · Chicago, Illinois 60602
Telephone: 773/553-2900 · Fax: 773/553-2951

October 12, 2021

Mr. Renante Marante
City of Chicago, Department of Public Health
333 S State St #200
Chicago, IL 60604

Re: Permission for Operation of a Liquid Waste Handling Facility
Green Era Renewable Energy and Urban Farming Campus
650 West 83rd Street
Chicago, IL 60620-1937

Mr. Marante:

I am writing to you at the request of Green Era Renewable Energy ("Green Era") regarding the former Morgan School located at 8314 South Birkhoff Avenue and 8407 South Kerfoot Avenue ("Property").

The former school has been closed since 2014; it has not been operated or used as a school since 2014. The school is not going to reopen. The Board of Education is seeking to sell the Property.

Therefore, the City's rules regarding the location of Liquid Waste Handling Facilities within 800 feet of any property ***used for a school***, hospital, nursing home, or convalescent center ***do not apply. Permission from the Board of Education is not required because the Property is not being used for a school.*** The school is permanently closed.

If you have any questions, please contact our outside legal counsel, Terry Diamond at (312) 628-7048 tdiamond@nealandleroy.com.

Sincerely,

Sevara Davis
Director of Real Estate
Chicago Public Schools

cc:
Erika Allen – Green Era Educational NFP
Jason Feldman – Green Era Educational NFP
Terry Diamond – Neal and Leroy, LLC

ATTACHMENT 19
FEMA FLOOD MAP

National Flood Hazard Layer FIRMette

FEMA

87°38'46"W 41°44'50"N

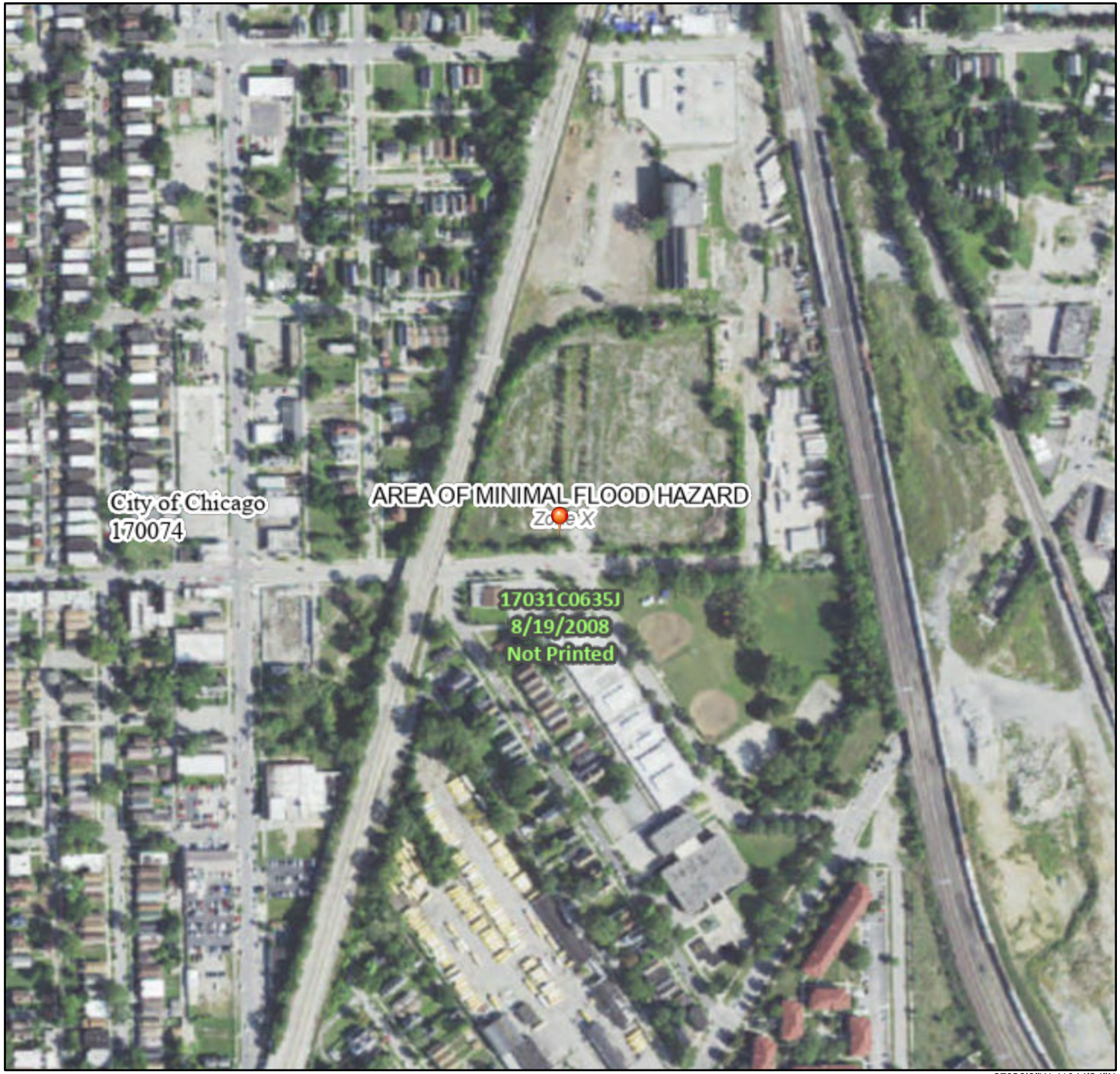

87°38'8"W 41°44'24"N

0 250 500 1,000 1,500 2,000 Feet

1:6,000

Basemap: USGS National Map: Orthoimagery: Data refreshed October, 2020

Legend

SEE FIS REPORT FOR DETAILED LEGEND AND INDEX MAP FOR FIRM PANEL LAYOUT

SPECIAL FLOOD HAZARD AREAS
- Without Base Flood Elevation (BFE) *Zone A, V, A99*
- With BFE or Depth *Zone AE, AO, AH, VE, AR*
- Regulatory Floodway

OTHER AREAS OF FLOOD HAZARD
- 0.2% Annual Chance Flood Hazard, Areas of 1% annual chance flood with average depth less than one foot or with drainage areas of less than one square mile *Zone X*
- Future Conditions 1% Annual Chance Flood Hazard *Zone X*
- Area with Reduced Flood Risk due to Levee. See Notes. *Zone X*
- Area with Flood Risk due to Levee *Zone D*

OTHER AREAS
- NO SCREEN Area of Minimal Flood Hazard *Zone X*
- Effective LOMRs
- Area of Undetermined Flood Hazard *Zone D*

GENERAL STRUCTURES
- Channel, Culvert, or Storm Sewer
- Levee, Dike, or Floodwall

OTHER FEATURES
- 20.2 Cross Sections with 1% Annual Chance
- 17.5 Water Surface Elevation
- Coastal Transect
- 513 Base Flood Elevation Line (BFE)
- Limit of Study
- Jurisdiction Boundary
- Coastal Transect Baseline
- Profile Baseline
- Hydrographic Feature

MAP PANELS
- Digital Data Available
- No Digital Data Available
- Unmapped

N

The pin displayed on the map is an approximate point selected by the user and does not represent an authoritative property location.

This map complies with FEMA's standards for the use of digital flood maps if it is not void as described below. The basemap shown complies with FEMA's basemap accuracy standards

The flood hazard information is derived directly from the authoritative NFHL web services provided by FEMA. This map was exported on 8/17/2021 at 2:59 PM and does not reflect changes or amendments subsequent to this date and time. The NFHL and effective information may change or become superseded by new data over time.

This map image is void if the one or more of the following map elements do not appear: basemap imagery, flood zone labels, legend, scale bar, map creation date, community identifiers, FIRM panel number, and FIRM effective date. Map images for unmapped and unmodernized areas cannot be used for regulatory purposes.

ATTACHMENT 20
ENDANGERED SPECIES/SENSITIVE AREA DOCUMENTATION

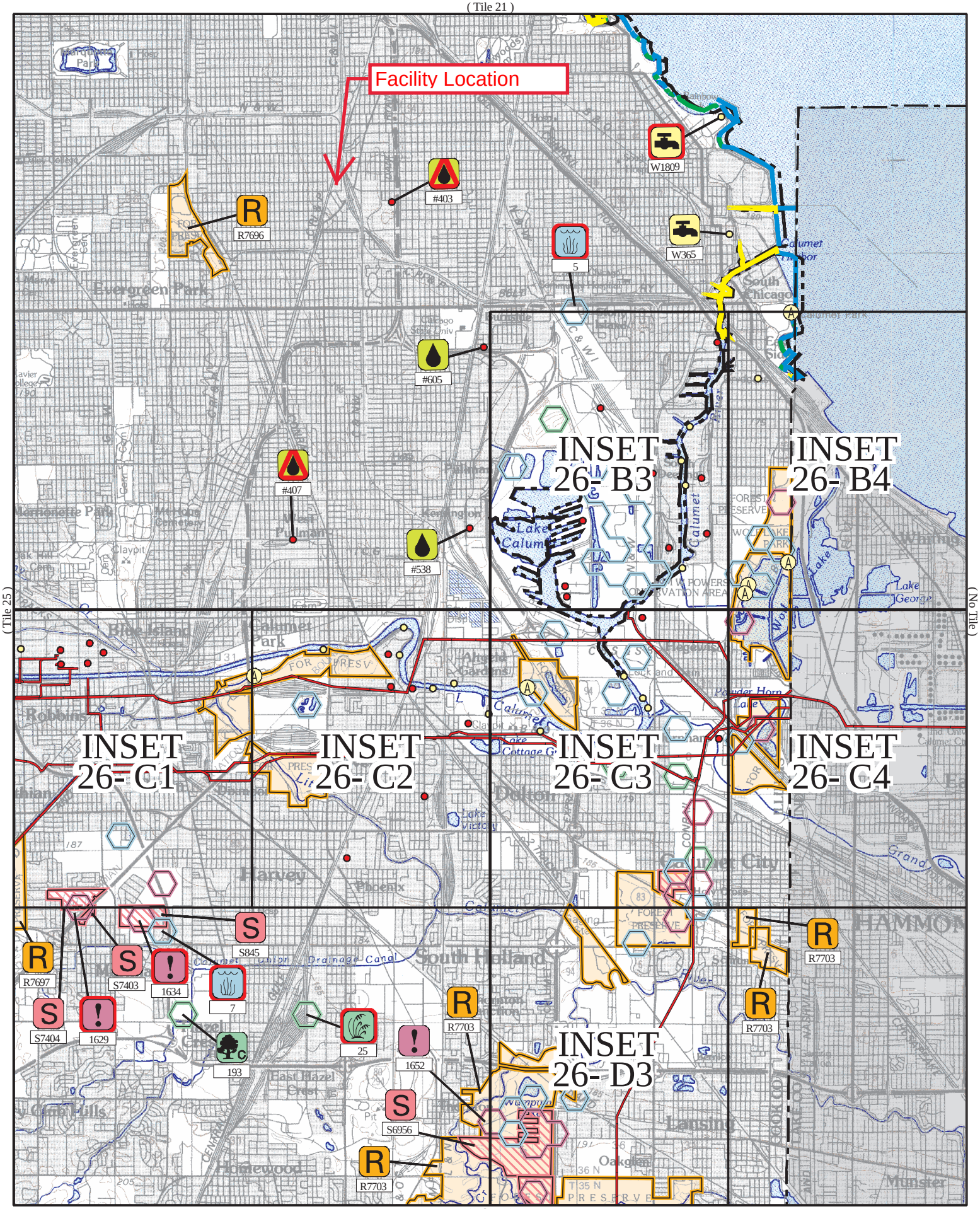
(Tile 21)
Facility Location
R7696
#403
W1809
W365
5
#605
#407
#538
INSET 26- B3
INSET 26- B4
INSET 26- C1
INSET 26- C2
INSET 26- C3
INSET 26- C4
INSET 26- D3
(Tile 25)
(No Tile)
(Tile 30)
R7697
S7403
1634
S845
7
S7404
1629
193
25
1652
R7703
S6956
R7703
R7703
R7703
Evergreen Park
Blue Island
Calumet Park
Robbins
Harvey
Phoenix
South Holland
Dolton
Calumet City
HAMMOND
Lansing
Homewood
Oakgien
Munster
South Chicago
Lake Calumet
Lake George
Powder Horn Lake
Lake Cottage Grove
Lake Victoria
Calumet Union Drainage Canal
East Hazel Crest
Chicago State Univ
Beverly Hills
Claypit
Pullman
Kensington
Washington Park
Marquette Park
Calumet Park
Calumet River
Grand Calumet River
Cook County Forest Preserve
January 2001
Scale 1:100,000
2 1 0 1
MILES
1 0 1 2 3 4
KILOMETERS
Chicago
Tile 26

ATTACHMENT 21
FUGITIVE DUST OPERATING PROGRAM

ENVIRONMENTAL

Environmental Engineers, Geologists and Scientists

Tel 847.573.8900
Fax 847.573.8953

Polo Park Business Center
27834 N. Irma Lee Circle
Lake Forest, Illinois 60045-5130

FUGITIVE DUST OPERATING PROGRAM
GREEN ERA RENEWABLE ENERGY & URBAN FARMING CAMPUS
650 WEST 83RD STREET
CHICAGO, ILLINOIS 60620-1937

DOC. NO. MP-12

October 29, 2021

DAI Project No. 7741

Prepared For:
Green Era 83rd Street, LLC
218 North Jefferson Street, Suite 300
Chicago, Illinois 60661-1307

Prepared By:
DAI Environmental, Inc.
27834 North Irma Lee Circle
Lake Forest, Illinois 60045

TABLE OF CONTENTS

LIST OF FIGURES i

LIST OF TABLES i

APC 391 FORM ii

1.0 INTRODUCTION 1
- 1.1 Site Description 1
- 1.2 Operating Program 2
- 1.3 Site Plan 3

2.0 ATTACHMENT TO APC 391 PART 7 4
- 2.1 Conveyors and Conveyor Transfer Points 4
- 2.2 Storage Piles 5
- 2.3 Paved Normal Traffic Roads/Paved Parking Lots 6

3.0 REPORTING REQUIREMENTS 8
- 3.1 Operating Program Amendment 8
- 3.2 Quarterly/Annual Reporting 8

LIST OF FIGURES

Site Location Map ..... Figure 1
Aerial View of Site and Surrounding Property Usage ..... Figure 2
Site Plan ..... Figure 3
Site Detail ..... Figure 3A

LIST OF APPENDICES

STOCKPILE INSPECTION FORM ..... APPENDIX A
DRIVEWAY DUST SUPPRESSION LOG ..... APPENDIX B
SUMMARY OF REVISIONS ..... APPENDIX C

©2021, DAI Environmental, Inc.

STATE OF ILLINOIS
ENVIRONMENTAL PROTECTION AGENCY
DIVISION OF AIR POLLUTION CONTROL
1021 NORTH GRAND AVENUE, EAST
SPRINGFIELD, ILLINOIS 62702

OPERATING PROGRAM FOR FUGITIVE PARTICULATE CONTROL	

1. THIS FORM IS USED TO APPLY FOR A FUGITIVE DUST OPERATING PROGRAM AS REQUIRED BY 35 IAC 212.309. COMPLETE THE FORM, KEEP ONE COPY FOR YOUR RECORDS, AND RETURN TWO COPIES TO THE ATTENTION OF BUREAU OF AIR PERMIT SECTION MANAGER AT THE ADDRESS LISTED ABOVE.

2a. NAME OF OWNER: Green Era 83rd Street, LLC		3a. NAME OE OPERATOR: Green Era 83rd Street, LLC	
2b. STREET ADDRESS OF OWNER: 218 North Jefferson Street, Suite 300		3b. STREET ADDRESS OF OPERATOR: Same as Owner	
2c. CITY OF OWNER: Chicago		3c. CITY OF OPERATOR:	
2d. STATE OF OWNER: IL	2e. ZIP CODE: 60661-1307	3d. STATE OF OPERATOR:	3e. ZIP CODE:

4a. NAME OF CORPORATE DIVISION OR PLANT: Green Era Renewable Energy & Urban Farming Campu		4b. STREET ADDRESS OF EMISSION SOURCE: 650 West 83rd Street		
4c. CITY OF EMISSION SOURCE: Chicago	4d. LOCATED WITHIN CITY LIMITS: ☒ YES ☐ NO	4e. TOWNSHIP:	4f. COUNTY: Cook	4g. ZIP CODE: 60620-1937

5. SUBMIT A SCALE MAP SHOWING ALL STORAGE PILES, CONVEYOR LOADING OPERATIONS, STORAGE PILE ACCESS ROADS, NORMAL TRAFFIC ROADS, PARKING FACILITIES, LOCATION OF UNLOADING AND TRANSPORTING OPERATIONS WITH POLLUTION CONTROL EQUIPMENT.

6a. DO STORAGE PILES CONTAIN A TOTAL OF MORE THAN 260,000 TONS OF MATERIAL IN A CALENDER YEAR? ☐ YES ☒ NO

6b. IF THE ANSWER TO 6a WAS YES, PLEASE SUBMIT THE FOLLOWING INFORMATION.

TOTAL AMOUNT OF MATERIAL IN THE STORAGE PILES: TONS/YEAR

AND SUBMIT AN ATTACHED SHEET DESCRIBING:

I) DETAILED OPERATING PROCEDURES AND CONTROL METHODS BY WHICH FUGITIVE PARTICULATES FROM THESE STORAGE PILES WILL BE MINIMIZED DURING LOADING, UNLOADING, PILE MAINTENANCE, AND WIND EROSION. HOW OFTEN WILL THESE PILES BE TREATED WITH SURFACTING AGENT? NAME THE TYPE AND CONCENTRATION OF SURFACTANT THAT WILL BE USED.

II) TYPE OF CONTROL METHODS USED FOR FUGITIVE PARTICULATE EMISSIONS FROM CONVEYOR LOADING OPERATIONS AND NORMAL TRAFFIC PATTERN ROADS SERVING THESE STORAGE PILES. IF SURFACTING AGENT IS USED STATE TYPE AND CONCENTRATION OF SURFACTING AGENT AND FREQUENCY OF ITS USE.

III) TYPE OF CONTROL METHODS USED FOR FUGITIVE PARTICULATE EMISSIONS FROM ALL PAVED OR UNPAVED PARKING LOTS AND NORMAL TRAFFIC PATTERN ROADS AT THIS FACILITY. IF ROADS ARE PAVED INDICATE FOOTAGE OF ROADS THAT WILL BE PAVED AND HOW FREQUENTLY THESE ROADS WILL BE CLEANED.

7. DOES THIS FACILITY HAVE ANY OF THE FOLLOWING SOURCES?	
a.) CRUSHERS	☐ YES ☒ NO
b.) GRINDING MILLS	☐ YES ☒ NO
c.) SCREENING OPERATIONS	☐ YES ☒ NO
d.) BUCKET ELEVATORS	☐ YES ☒ NO
e.) CONVEYORS	☒ YES ☐ NO
f.) CONVEYOR TRANSFER POINTS	☒ YES ☐ NO

g.) BAGGING OPERATIONS	☐ YES	☒ NO
h.) STORAGE BINS	☒ YES	☐ NO
i.) FINE PRODUCT TRUCK AND TRAILER LOADING OPERATIONS	☐ YES	☒ NO
j.) UNLOADING AND TRANSPORTING OPERATIONS OF MATERIAL COLLECTED BY POLLUTION CONTROL EQUIPMENT	☐ YES	☒ NO
k.) UNPAVED NORMAL TRAFFIC ROADS	☐ YES	☒ NO
l.) PAVED NORMAL TRAFFIC ROADS	☒ YES	☐ NO
m.) INPAVED PARKING LOTS	☐ YES	☒ NO
n.) PAVED PARKING LOTS	☒ YES	☐ NO

7b. FOR EACH SOURCE MARKED YES, ATTACH AN ADDITIONAL SHEET DESCRIBING THE TYPE OF CONTROL METHODS THAT WILL BE USED TO CONTROL FUGITIVE PARTICULATE EMISSIONS. IF SURFACTANT IS USED, STATE THE TYPE AND CONCENTRATION OF SURFACTANT AND FREQUENCY OF ITS APPLICATION. IF THE ROADS AND PARKING LOTS ARE PAVED, STATE THE FREQUENCY OF CLEANING.

8. VEHICULAR MILES TRAVEL INFORMATION:
THIS INFORMATION IS TO BE DETERMINED BY THE NUMBER OF CARS MULTIPLIED BY THE DISTANCE TRAVELED FOR THE FOLLOWING ROADS.

I) TRAFFIC ON UNPAVED NORMAL TRAFFIC ROADS IN	MILES PER YEAR	0
II) TRAFFIC ON PAVED NORMAL TRAFFIC ROADS IN	MILES PER YEAR	2,150
III) TRAFFIC ON UNPAVED PARKING LOTS IN	MILES PER YEAR	0
IV) TRAFFIC ON PAVED PARKING LOTS IN	MILES PER YEAR	250

9. IS THIS FUGITIVE PARTICULATE CONTROL PROGRAM IMPLEMENTED AT THE PRESENT? ☒ YES ☐ NO

10.

AUTHORIZED SIGNATURE (S): (D)

BY _____ 10/29/21
SIGNATURE DATE

Erika Allen
TYPED OR PRINTED NAME OF SIGNER

President
TITLE OF SIGNER

BY _____ 11/1/21
SIGNATURE DATE

Jason Feldman
TYPED OR PRINTED NAME OF SIGNER

CEO
TITLE OF SIGNER

This Agency is authorized to require this information under Illinois Revised Statutes, 1979, Chapter 111 1/2, Section 1039. Disclosure of this information is required under that Section. Failure to do so may prevent this form from being processed and could result in your application being denied. This form has been approved by the Forms Management Center.

1.0 INTRODUCTION

1.1 Site Description

Facility Owner, Address, and Telephone
Green Era 83rd Street, LLC
218 North Jefferson Street, Suite 300
Chicago, Illinois 60661-13074
Telephone: (708) 792-0649

Facility Operator, Address, and Telephone
Green Era 83rd Street, LLC
218 North Jefferson Street, Suite 300
Chicago, Illinois 60661-13074
Contact: Jason Feldman, Director
Telephone: (708) 792-0649

A formerly vacant property addressed as 650 West 83rd Street in Chicago, Illinois is being developed into a food waste (solid and liquid) recycling (composting) facility. The property is owned by Green Era Educational NFP. The facility and associated equipment are owned and operated by Green Era 83rd Street, LLC. Figure 1 is a topographical Site Location Map. The facility, referred to as the Green Era Renewable Energy and Urban Farming Campus (Green Era), will recycle food waste via conventional wet anaerobic digestion. In addition to anaerobic digestion (primary facility activities), the property will also be used for urban farming operations and as a community garden center.

The 8.905± acre property is a mixture of asphalt paved driveways/parking, buildings, and non-hardscape surface. Buildings on-site include the 35,000-ft^2 Processing Building, 5,600-ft^2 Compost Loading and Handling Building (Pole Barn), and a number of "hoop houses" (i.e., simple greenhouse structures) that will be used to perform indoor urban farming within the "Urban Agriculture Area." Areas without hardscape include the stormwater retention pond, the "Urban Agriculture Area," the community garden center, and various areas of general landscaping.

The facility is located in the Auburn Park neighborhood of Chicago within an industrial area bound by residential neighborhoods. The facility is bound by Aabbitt Adhesives, then a ComEd substation to the north; by South Wallace Street, then Diamond Waste Recycling or a vacant lot used for truck

©2021, DAI Environmental, Inc.

parking to the east; by West 83rd Street, then a church or Mahalia Jackson Park to the south; and by Metra railroad tracks, then a residential neighborhood to the west. Figure 2 is an aerial view of the development property and surrounding area.

The facility will operate as a food waste recycling facility, utilizing anaerobic digestion to create dewatered digestate cake as a finished product. As a by-product of the anaerobic digestion process, biogas, primarily composed of methane, will be generated. Typical operations at the facility will include the refining of the biogas, creating clean biomethane for injection into the natural gas utility, with the "tail gas" (containing the impurities removed from the biogas) burned via the on-site thermal oxidizer. When necessary, biogas that cannot be refined and upgraded to biomethane will be burned via the on-site flare. A processing building odor control system comprised of ionizers and an activated carbon guard bed will be permitted and operated to prevent odorous discharges from the processing building. Typical operations (i.e., when food waste is imported and preliminarily processed) will be from 7:00-17:00, Monday-Saturday. Operations may also occur periodically on Sundays. Regardless of typical operations, the processing building at the facility will be continuously monitored, with anaerobic digestion operations occurring in the digester tank constantly (24-hrs/day, 7-days/wk).

1.2 Operating Program

The Green Era facility has applied for a Lifetime Operating Permit with the Illinois Environmental Protection Agency (Illinois EPA). A permit has not yet been assigned for Application Number 21060012, but the facility has been assigned ID 031600TQW. Based upon the location of the facility within Cook County and the applicable SIC (4953), the general requirements of 35 IAC 212 Subpart K: *Fugitive Particulate Matter* are applicable per 35 IAC 212.302(b). Therefore, an operating program is required by 35 IAC 212.309.

This is the initial *Fugitive Dust Operating Program* (Operating Program) for this facility, completed to address all applicable requirements of 35 IAC 212.310. This document is an attachment to the Illinois EPA *Operating Program for Fugitive Emission Control* form (APC 391) and provides information not directly included on the APC 391 form. Per 35 IAC 212.301, "No person shall cause or allow the emission of fugitive particulate matter from any process…beyond the property line of

©2021, DAI Environmental, Inc.

the source." This Operating Program provides physical controls, standard operating procedures, and Best Management Practices (BMPs) implemented at the facility to prevent a release of visible fugitive particulate matter (PM) beyond property boundaries.

Ms. Erika Allen, President, and Mr. Jason Feldman, Director, have responsibility for the management of this Operating Program, as well as the periodic review and update required by 35 IAC 212.312. Various tasks may be delegated to appropriate personnel as applicable (e.g., inspections and physical dust suppression activities).

1.3 Site Plan

Part 5 of the APC 391 form and 35 IAC 212.310(c) specify various items to be included on a scaled map as part of the Operating Program. Figure 1 is a topographical Site Location Map, and Figure 2 provides an aerial view of the facility and surrounding property usage. Figures 3-3A provide a Site Plan and Site Detail, respectively, that show applicable required information including: storage piles and associated road/traffic patterns, conveyor loading operations, normal traffic roads, and traffic patterns, and parking facilities.

©2021, DAI Environmental, Inc.

2.0 ATTACHMENT TO APC 391 PART 7

The Green Era facility includes potential fugitive particulate matter emission sources. The below information details controls and BMPs in place to prevent fugitive PM emissions. No solids are collected/transferred from the flare, thermal oxidizer, or odor control system. Therefore, 35 IAC 212.307 (materials collected by pollution control equipment) regulations are not applicable to this facility.

2.1 Conveyors and Conveyor Transfer Points

Part 7(e) and 7(f) of the APC 391 form indicate that conveyors and conveyor transfer points are present at the facility. None of the conveyor operations are as described in 35 IAC 212.305 (i.e., conveyor transfer of solid materials into stockpiles).

The conveyors in use at the facility include several enclosed shaftless screw auger conveyors. All conveyors are located inside of the Processing Building.

A 2-step inclined, enclosed shaftless screw auger conveyor is used to transfer solids from the live-bottom receiving bunker in the basement of the Processing Building to the separation mill on the main floor of the Processing Building. Material rejected from the separation mill is conveyed away by a multi-step belt conveyor system to compactors located inside the Processing Building on the main floor. The homogenized slurry created in the separation mill is transferred via 2-step auger conveyor into the slope-bottom grit hopper. Solids that settle out of the slurry in the slope-bottom grit hopper will be transferred by a 2-stage inclined auger conveyor that connects to the multi-step belt conveyor system to compactors. Non-digestible materials screened from digestate (product of the anaerobic digestion process) via the in-line screw press will also drop into the multi-step auger conveyor system to compactors. Finished product created by the dewatering of the digestate will be directly loaded via multi-step auger conveyor system into trucks for shipment. All conveyors in use at the facility are depicted on Figure 3A.

©2021, DAI Environmental, Inc.

With all these conveyors being inside of a building under negative pressure and with all doors closed, no wetting or other dust suppression methods listed in 35 IAC 212.308 will be necessary. There is no threat of fugitive dust resulting from these conveyors that are located inside of a building

2.2 Storage Piles

Part 7(h) of the APC 391 form indicates that "storage bins" are present at the facility. The identification of "storage bins" is associated with the material storage piles (35 IAC 212.304) inside of the Pole Barn building (see Figures 3-3A). There are no actual storage bins. When not directly loaded onto trucks for off-site shipment or used on-site in the urban farming operations, excess finished product will be temporarily stockpiled inside the Pole Barn building. Temporary stockpiling of wood chips and coir (coconut shells) and mixing of these materials with the finished product will also take place within the Pole Barn. Loading of trucks from the storage pile will also be performed inside of the Pole Barn, with entry through one side and exit through the opposite side (i.e., drive through operation).

To prevent PM emissions beyond the property boundary, Green Era has implemented BMPs that include stockpiling indoors (i.e., covered as required by 35 IAC 212.304), keeping entrance/exit doors of the building closed when conditions are such that dust could be generated and blown out of the building, manually wetting of wood chips and coir (as necessary), and requiring that all trucks loaded at the facility be tarped before departure (i.e., compliance with cover requirement of by 35 IAC 212.315). The above BMPs will help ensure compliance with the opacity limitations (10%) specified in 35 IAC 212.316(d). Any other additional measures that are implemented to prevent fugitive dust and maintain compliance with opacity limits, if necessary, will be specified on the *Stockpile Inspection Form* (see blank example in Appendix A).

To comply with the record keeping requirements of 35 IAC 212.316(g), facility personnel will conduct inspections of stockpiles and document observations on the *Stockpile Inspection Form*. The inspection form provides information including: date, inspector's initials, the pile being inspected, notes on dust suppression methods utilized (if applicable), and any other comments related to potential dust generation. With stockpiles being located indoors, the occurrence of precipitation will not be used as an explanation for not performing inspection activities. Inspection activities will be

©2021, DAI Environmental, Inc.

performed during typical operation hours (7:00-17:00). In accordance with 35 IAC 212.316(g)(4), the records will be maintained for a period of at least 3-yrs.

2.3 Paved Normal Traffic Roads/Paved Parking Lots

Parts 7(l) and 7(n) of the APC 391 form indicate that paved "normal traffic roads" and parking lots, respectively, are present at the facility. The "normal traffic roads" at the facility consist of internal driveway areas that trucks and personnel vehicles travel upon during operation hours. Driveways include the facility entrance/exits at the northeast corner and center south property boundary, the area surrounding the Processing Building and outdoor storage tanks, and the connection to/from the Pole Barn (which will be a concrete slab-on-grade building). Parking areas are located to the southeast (3 spaces), south (7 spaces), and southwest (9 spaces) of the Processing Building. The driveways and parking areas at the facility are generally in daily use. As a matter of traffic control, all truck traffic uses the eastern entrance/exit located on South Wallace Street. The southern driveway that leads to West 83rd Street is for personal vehicles of facility personnel and public visitors. The driveway and parking areas are shown on Figures 3-3A. Figure 3 shows the traffic patterns through the facility.

Per 35 IAC 212.306, all normal traffic pattern roads and parking facilities at a manufacturing property "…shall be paved or treated with water, oils or chemical dust suppressants. All paved areas shall be cleaned on a regular basis. All areas treated with water, oils or chemical dust suppressants shall have the treatment applied on a regular basis, as needed…" All driveways and parking are asphalt paved. No unpaved parking or traffic areas are present at the facility. The concrete slab-on-grade building pad inside of the Pole Barn is the only "normal traffic pattern access areas surrounding storage piles" (as referenced in 35 IAC 212.306). Driveways outside of building are for vehicle movement only, and the parking areas are solely for personal vehicles. All regulated facility operations are conducted inside of the Processing Building and the Pole Barn. Therefore, these areas are not viewed as having a significant potential to generate fugitive emissions and limited dust controls are necessary.

Daily washdown activities will be conducted inside of the Processing Building. The concrete floor of the Pole Barn will also be regularly maintained, particularly during the periods when material

©2021, DAI Environmental, Inc.

stockpiling activities are being conducted. The facility may engage, as necessary, a street sweeping contractor to perform periodic general cleaning of the driveway/parking areas and/or if dust removal from paved areas is necessary to prevent fugitive dust and ensure compliance with opacity limitations (10%) specified in 35 IAC 212.316(c). Any other additional measures that are implemented to prevent fugitive dust and maintain compliance with opacity limits, if necessary, will be specified on the *Driveway Dust Suppression Log* (see blank example in Appendix B).

To comply with the record keeping requirements of 35 IAC 212.316(g), facility personnel will conduct inspections of driveways/parking areas and document observations on the *Driveway Dust Suppression Log*. The log provides information including: date, inspector's initials, applicable information requested by 35 IAC 212.316(g)(2)(d), and any other pertinent comments. Inspection activities will generally be performed during typical operation hours (7:00-17:00). Per 35 IAC 212.316(g)(4), the records are maintained for a period of at least 3-yrs.

©2021, DAI Environmental, Inc.

3.0 REPORTING REQUIREMENTS

3.1 Operating Program Amendment

Per 35 IAC 212.312, "The operating program shall be amended from time to time…" To meet the requirement, Green Era will conduct reviews of the Operating Program. If changes to the Operating Program are required, the updates will be completed in a timely manner and the updated Operating Program will be submitted to Illinois EPA for review. A form for tracking updates is provided in Appendix C.

3.2 Quarterly/Annual Reporting

Per 35 IAC 212.316(g)(1), an annual report shall be submitted to the Illinois EPA summarizing the fugitive dust control measures that are performed. The annual report shall include a cover letter and copies of completed documentation, specifically the *Stockpile Inspection Form* and the *Driveway Dust Suppression Log*. Quarterly reports will be submitted in compliance with 35 IAC 212.316(g)(5) during any quarter in which fugitive dust controls discussed within this Operating Program are not implemented (e.g., raining, so watering of roadway unnecessary). As required, quarterly reports shall be submitted to the Illinois EPA within 30-days of the end of the quarter (i.e., April 30th, July 30th, October 30th, and January 30th). The January submission shall serve as both the 4th quarter and annual report.

©2021, DAI Environmental, Inc.

FIGURES

©2021, DAI Environmental, Inc.

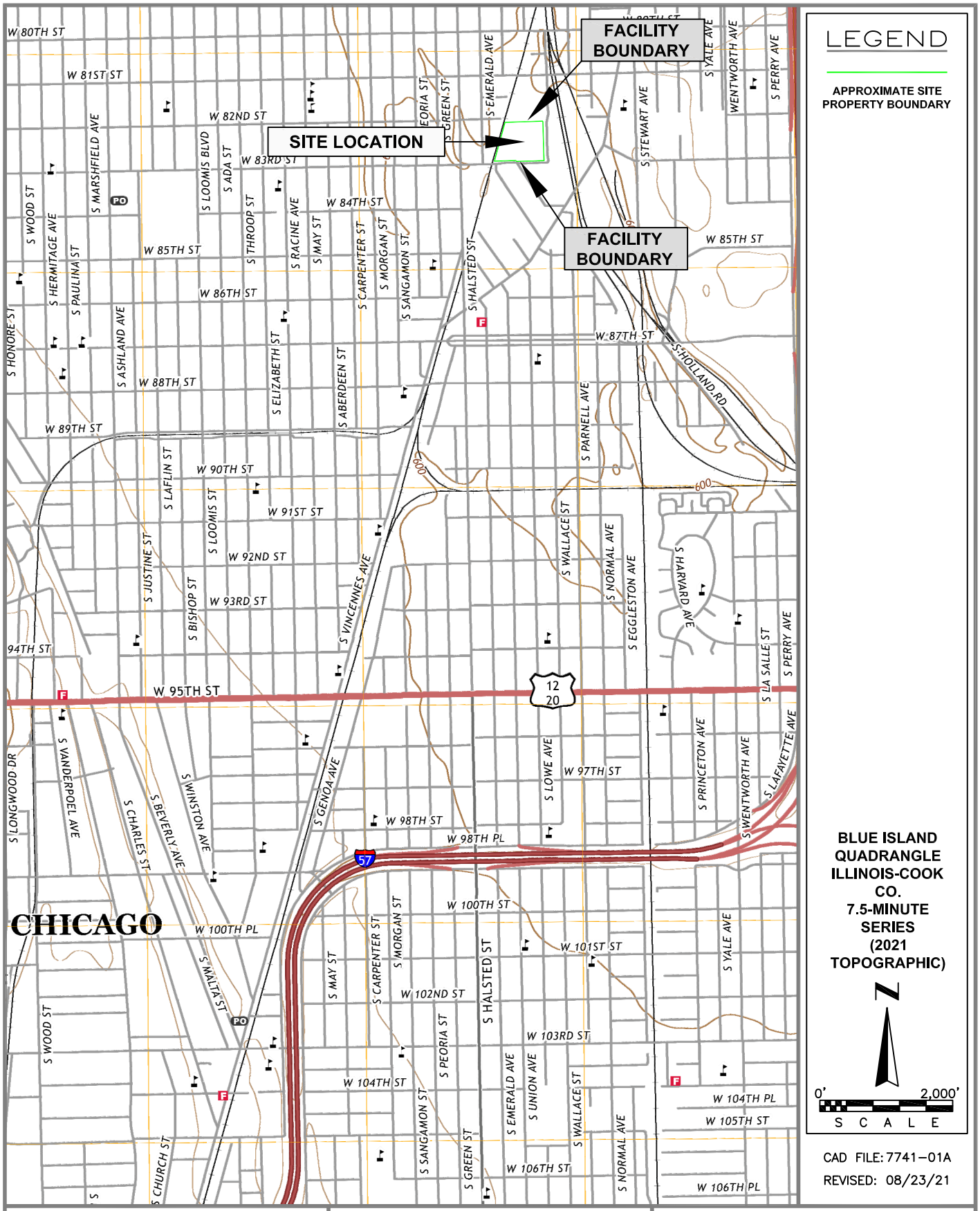

LEGEND

APPROXIMATE SITE PROPERTY BOUNDARY

BLUE ISLAND QUADRANGLE ILLINOIS-COOK CO. 7.5-MINUTE SERIES (2021 TOPOGRAPHIC)

N

0' 2,000'

S C A L E

CAD FILE: 7741-01A

REVISED: 08/23/21

DAI ENVIRONMENTAL

GREEN ERA RENEWABLE ENERGY AND URBAN FARMING CAMPUS
650 WEST 83RD STREET
CHICAGO, ILLINOIS

FIGURE 1
SITE LOCATION MAP

ENVIRONMENTAL DAI

GREEN ERA RENEWABLE ENERGY AND URBAN FARMING CAMPUS
650 WEST 83RD STREET
CHICAGO, ILLINOIS

FIGURE 2
AERIAL VIEW OF SITE AND SURROUNDING PROPERTY USAGE
(MAY 2021 AERIAL TAKEN GOOGLE MAPS)

AABBITT ADHESIVES, INC.

WEST 82ND STREET

SOUTH EMERALD AVENUE

RESIDENTIAL

RESIDENTIAL

RESIDENTIAL BOUNDARY

RESIDENTIAL

METRA

REGULATOR & GAS UTILITY CONNECTION

FACILITY BOUNDARY

WATER TOWER

T-105 DIGESTER AST (1,680,000-GAL)

T-100 BIOMASS EQUALIZATION AST (320,000-GAL)

3,000-GAL UNDERGROUND OVERFLOW SUMP

MCC

METER

COMP

REG

GC

PSA

COMP

BIOGAS UPGRADE EQUIPMENT SKIDS

COMPOST LOADING & HANDLING BUILDING (POLE BARN) (TEMPORARY INDOOR MATERIAL STOCKPILING)

THERMAL OXIDIZER

FLARE BURNER

PROCESSING BUILDING

LOWER LEVEL

ELEC

BLOWERS & UTILITY ROOM

KNIZER CARBON

UNDERGROUND PIPING

HVAC STACK

ELEC

OFFICE/ BATH

MUNICIPAL DUMPSTER ENCLOSURE

PARKING (9 SPACES)

PARKING (3 SPACES)

PARKING (7 SPACES)

VEGETATION

VEGETATION

VEGETATION

VEGETATION

VEGETATION

VEGETATION

HOOP HOUSE (INDOOR FARMING)

HOOP HOUSE (INDOOR FARMING)

HOOP HOUSE (INDOOR FARMING)

HOOP HOUSE (INDOOR FARMING)

URBAN AGRICULTURE AREA

SOUTH WALLACE STREET

DIAMOND WASTE & RECYCLING

TRUCK TRAILER PARKING

UNION PACIFIC RAILWAY

COMMUNITY GARDEN CENTER

STORMWATER POND

FACILITY BOUNDARY

FINAL MANHOLE

METER MANHOLE (OUTFALL 1A)

WEST 83RD STREET

UNDEVELOPED

CHURCH

MAHALIA JACKSON PARK

LEGEND

- PROPERTY BOUNDARY OF COMPOSTING FACILITY (8.095-ACRES)
- RAILROAD TRACKS
- GAS UTILITY
- BIOGAS/BIOMETHANE/TAIL GAS PIPING
- WATER UTILITY
- STORM SEWER
- SANITARY SEWER
- MWRD COMBINED SEWER (OFF-SITE)
- T — ELECTRICAL TRANSFORMER
- FENCING (6-FT HIGH)
- ASPHALT PAVING
- GRAVEL COVERING

N

0' 100'

S C A L E

CAD FILE: 7741-12 (Air)

REVISED: 12/13/21

DAI ENVIRONMENTAL

GREEN ERA RENEWABLE ENERGY
AND URBAN FARMING CAMPUS
650 WEST 83RD STREET
CHICAGO, ILLINOIS

FIGURE 3
SITE PLAN

METRA

ASPHALT DRIVEWAY

T-105 DIGESTER AST (1,680,000-GAL)

T-100 BIOMASS EQUALIZATION AST (320,000-GAL)

5,000-GAL UNDERGROUND OVERFLOW SUMP

T

MCC

GC

METER

COMP.

REG.

PSA

COMP.

BIOGAS UPGRADE EQUIPMENT SKIDS

ASPHALT DRIVEWAY

COMPOST LOADING & HANDLING BUILDING (POLE BARN) (TEMPORARY INDOOR MATERIAL STOCKPILING)

NON-DIGESTIBLE WASTE TRASH COMPACTORS (40-YD^3), MAIN FLOOR

TANKER TRUCK RECEIVING/UNLOADING (LIQUID FOOD WASTE)

TRUCK RAMP (PACKAGED FOOD RECEIVING)

TANK T-205, SCREENED DIGESTATE (30,000-GAL)

LIQUID FOOD/WASH WATER TANKS (30,000-GAL EACH)

TANK T-050A

TANK T-050

S-205 SCREEN PRESS (IN-LINE SOLIDS REMOVALS)

THERMAL OXIDIZER (EMISSIONS)

FLARE BURNER (EMISSIONS)

BOILERS

IONIZER CANNON

H-062 LIVE-BOTTOM RECEIVING BUNKER, SUB-GRADE (90-YD^3)

PUMP

PUMP

RECEIVING BAY/ UNLOADING TO BUNKER (SOLID FOOD WASTE)

CARBON GUARD BED

FIRE SUPPRESSION SYSTEM WATER CONNECTION

T-065 GRIT SEPARATION TANK (5,500-GAL)

S-063 SEPARATION MILL

T-210B POLYMER TANK (2000-GAL)

INDOOR SOLID FOOD WASTE STOCKPILING AREA (MAIN FLOOR)

HVAC STACK

FUTURE RECEIVING BAY

T-210A FUTURE POLYMER TANK & T-210C SPARE (14,000-GAL EACH)

T-210C

T-210A

T-251 SPARE TANK (30,000-GAL)

T-250B

T-250A

FILTRATE TANKS (30,000-GAL EACH)

T-211 FLOC TANK (200-GAL) & Y-211 BELT PRESS

SEMI-TRUCK LOADING (FINISHED PRODUCT)

PROCESSING BUILDING

HOOP HOUSE (INDOOR FARMING)

HOOP HOUSE (INDOOR FARMING)

HOOP HOUSE (INDOOR FARMING)

HOOP HOUSE (INDOOR FARMING)

URBAN AGRICULTURE AREA

ASPHALT DRIVEWAY

VEGETATION

VEGETATION

PARKING (9 SPACES)

MUNICIPAL DUMPSTER ENCLOSURE

VEGETATION

PARKING (3 SPACES)

LEGEND

- PROPERTY BOUNDARY OF COMPOSTING FACILITY (8.095-ACRES)
- RAILROAD TRACKS
- BIOGAS/BIOMETHANE/TAIL GAS PIPING
- WATER UTILITY
- PROCESS PIPING (FOOD WASTE SLURRY, DIGESTATE, FILTRATE)
- TRENCH DRAIN AND SUMP PIT
- T — ELECTRICAL TRANSFORMER
- FENCING (6-FT HIGH)
- GRAVEL COVERING
- LOWER LEVEL LEVEL OF BUILDING
- CONVEYOR UNIT
- SUB-GRADE STORAGE TANK (LOWER LEVEL LEVEL OF BUILDING)
- TRUCK ROUTING

N

0' 50'

S C A L E

CAD FILE: 7741-13 (Fug)

REVISED: 12/13/21

DAI ENVIRONMENTAL

GREEN ERA RENEWABLE ENERGY
AND URBAN FARMING CAMPUS
650 WEST 83RD STREET
CHICAGO, ILLINOIS

FIGURE 3A
SITE DETAIL SHOWING
PROCESS OPERATIONS AND EQUIPMENT

APPENDIX A
STOCKPILE INSPECTION FORM
(BLANK EXAMPLE)

©2021, DAI Environmental, Inc.

Facility
Green Era Renewable Energy
650 West 83rd Street
Chicago, IL 60620

STOCKPILE INSPECTION FORM

MONTH_____ **YEAR** _____

Owner/Operator
Green Era 83rd Street, LLC
218 North Jefferson Street, Suite 300
Chicago, IL 60661

Day of Month*	Visual Observation** Finished Product	Visual Observation** Wood Chips	Visual Observation** Coir	Visual Observation** Other – specify in comments	Comments***	Initials of Inspector
1						
2						
3						
4						
5						
6						
7						
8						

***NOTE – On hot, dry days and/or when winds are sufficiently strong to cause drying and blowing, you should consider conducting stockpile observations more frequently.**

****Observations: NSP – No stockpile for inspection**
Dry – Stockpile dry and capable of creating dust (if noted, note in comments how dust generation prevented)
Wet – Stockpile material adequately wet to prevent dust
NP – Not performed (provide comments)

*****Comments – Add any other pertinent information-for example, note "no concerns, all storage indoors."**

MAINTAIN RECORDS FOR 3-YEARS, MINIMUM

Facility
Green Era Renewable Energy
650 West 83rd Street
Chicago, IL 60620

STOCKPILE INSPECTION FORM

MONTH_____ **YEAR** _____

Owner/Operator
Green Era 83rd Street, LLC
218 North Jefferson Street, Suite 300
Chicago, IL 60661

Day of Month*	Visual Observation** Finished Product	Visual Observation** Wood Chips	Visual Observation** Coir	Visual Observation** Other – specify in comments	Comments***	Initials of Inspector
9						
10						
11						
12						
13						
14						
15						
16						

***NOTE – On hot, dry days and/or when winds are sufficiently strong to cause drying and blowing, you should consider conducting stockpile observations more frequently.**

****Observations: NSP – No stockpile for inspection**
Dry – Stockpile dry and capable of creating dust (if noted, note in comments how dust generation prevented)
Wet – Stockpile material adequately wet to prevent dust
NP – Not performed (provide comments)

*****Comments – Add any other pertinent information-for example, note "no concerns, all storage indoors."**

MAINTAIN RECORDS FOR 3-YEARS, MINIMUM

Facility
Green Era Renewable Energy
650 West 83rd Street
Chicago, IL 60620

STOCKPILE INSPECTION FORM

MONTH_____ **YEAR** _____

Owner/Operator
Green Era 83rd Street, LLC
218 North Jefferson Street, Suite 300
Chicago, IL 60661

Day of Month*	Visual Observation** Finished Product	Visual Observation** Wood Chips	Visual Observation** Coir	Visual Observation** Other – specify in comments	Comments***	Initials of Inspector
17						
18						
19						
20						
21						
22						
23						
24						

***NOTE – On hot, dry days and/or when winds are sufficiently strong to cause drying and blowing, you should consider conducting stockpile observations more frequently.**

****Observations: NSP – No stockpile for inspection**
Dry – Stockpile dry and capable of creating dust (if noted, note in comments how dust generation prevented)
Wet – Stockpile material adequately wet to prevent dust
NP – Not performed (provide comments)

*****Comments – Add any other pertinent information-for example, note "no concerns, all storage indoors."**

MAINTAIN RECORDS FOR 3-YEARS, MINIMUM

Facility
Green Era Renewable Energy
650 West 83rd Street
Chicago, IL 60620

STOCKPILE INSPECTION FORM

MONTH_____ **YEAR** _____

Owner/Operator
Green Era 83rd Street, LLC
218 North Jefferson Street, Suite 300
Chicago, IL 60661

Day of Month*	Visual Observation** Finished Product	Visual Observation** Wood Chips	Visual Observation** Coir	Visual Observation** Other – specify in comments	Comments***	Initials of Inspector
25						
26						
27						
28						
29						
30						
31						

***NOTE – On hot, dry days and/or when winds are sufficiently strong to cause drying and blowing, you should consider conducting stockpile observations more frequently.**

****Observations: NSP – No stockpile for inspection**
Dry – Stockpile dry and capable of creating dust (if noted, note in comments how dust generation prevented)
Wet – Stockpile material adequately wet to prevent dust
NP – Not performed (provide comments)

*****Comments – Add any other pertinent information-for example, note "no concerns, all storage indoors."**

MAINTAIN RECORDS FOR 3-YEARS, MINIMUM

APPENDIX B
DRIVEWAY DUST SUPPRESSION LOG
(BLANK EXAMPLE)

©2021, DAI Environmental, Inc.

Facility
Green Era Renewable Energy
650 West 83rd Street
Chicago, IL 60620

DRIVEWAY DUST SUPPRESSION LOG

MONTH_____ **YEAR** _____

Owner/Operator
Green Era 83rd Street, LLC
218 North Jefferson Street, Suite 300
Chicago, IL 60661

Day of Month	Visual Observation* Outside Driveways/Parking	Visual Observation* Processing Building Floor	Visual Observation* Pole Barn Floor	Comments***	Initials of Inspector
1					
2					
3					
4					
5					
6					
7					
8					

***Observations:** **Clean – Conditions sufficient to prevent dust generation**
Dirty – Cleaning required to prevent dust generation (if noted, provide comments on cleaning or other dust generation prevention activities)**
Wet – Adequately wet to prevent dust generation
NP – Not performed (provide comments)

**** – If cleaning or other dust generation prevention activities required, provide appropriate description and ensure all items from 35 IAC 212.316(g)(2)(D) are noted in Comments. For water/chemical application, include location controlled, application rate, frequency, and width, and total volume applied. If chemical applied, specify type and dilution. If physical controls utilized (e.g., sweeping), provide adequate information similar to water/chemical application.**

*****Comments – Add any other pertinent information. For example, add a note such as "rain," "driveway is wet," or "no dust being generated." Also provide justification if dust suppression is required but not performed.**

MAINTAIN RECORDS FOR 3-YEARS, MINIMUM

Facility
Green Era Renewable Energy
650 West 83rd Street
Chicago, IL 60620

DRIVEWAY DUST SUPPRESSION LOG

MONTH_____ **YEAR** _____

Owner/Operator
Green Era 83rd Street, LLC
218 North Jefferson Street, Suite 300
Chicago, IL 60661

Day of Month	Visual Observation* Outside Driveways/Parking	Visual Observation* Processing Building Floor	Visual Observation* Pole Barn Floor	Comments***	Initials of Inspector
9					
10					
11					
12					
13					
14					
15					
16					

***Observations:** **Clean – Conditions sufficient to prevent dust generation**
Dirty – Cleaning required to prevent dust generation (if noted, provide comments on cleaning or other dust generation prevention activities)**
Wet – Adequately wet to prevent dust generation
NP – Not performed (provide comments)

**** – If cleaning or other dust generation prevention activities required, provide appropriate description and ensure all items from 35 IAC 212.316(g)(2)(D) are noted in Comments. For water/chemical application, include location controlled, application rate, frequency, and width, and total volume applied. If chemical applied, specify type and dilution. If physical controls utilized (e.g., sweeping), provide adequate information similar to water/chemical application.**

*****Comments – Add any other pertinent information. For example, add a note such as "rain," "driveway is wet," or "no dust being generated." Also provide justification if dust suppression is required but not performed.**

MAINTAIN RECORDS FOR 3-YEARS, MINIMUM

Facility
Green Era Renewable Energy
650 West 83rd Street
Chicago, IL 60620

DRIVEWAY DUST SUPPRESSION LOG

MONTH_____ **YEAR** _____

Owner/Operator
Green Era 83rd Street, LLC
218 North Jefferson Street, Suite 300
Chicago, IL 60661

Day of Month	Visual Observation* Outside Driveways/Parking	Visual Observation* Processing Building Floor	Visual Observation* Pole Barn Floor	Comments***	Initials of Inspector
17					
18					
19					
20					
21					
22					
23					
24					

***Observations:** **Clean – Conditions sufficient to prevent dust generation**
Dirty – Cleaning required to prevent dust generation (if noted, provide comments on cleaning or other dust generation prevention activities)**
Wet – Adequately wet to prevent dust generation
NP – Not performed (provide comments)

**** – If cleaning or other dust generation prevention activities required, provide appropriate description and ensure all items from 35 IAC 212.316(g)(2)(D) are noted in Comments. For water/chemical application, include location controlled, application rate, frequency, and width, and total volume applied. If chemical applied, specify type and dilution. If physical controls utilized (e.g., sweeping), provide adequate information similar to water/chemical application.**

****Comments – Add any other pertinent information. For example, add a note such as "rain," "driveway is wet," or "no dust being generated." Also provide justification if dust suppression is required but not performed.**

MAINTAIN RECORDS FOR 3-YEARS, MINIMUM

Facility
Green Era Renewable Energy
650 West 83rd Street
Chicago, IL 60620

DRIVEWAY DUST SUPPRESSION LOG

MONTH_____ **YEAR** _____

Owner/Operator
Green Era 83rd Street, LLC
218 North Jefferson Street, Suite 300
Chicago, IL 60661

Day of Month	Visual Observation* Outside Driveways/Parking	Visual Observation* Processing Building Floor	Visual Observation* Pole Barn Floor	Comments***	Initials of Inspector
25					
26					
27					
28					
29					
30					
31					

***Observations:** **Clean – Conditions sufficient to prevent dust generation**
Dirty – Cleaning required to prevent dust generation (if noted, provide comments on cleaning or other dust generation prevention activities)**
Wet – Adequately wet to prevent dust generation
NP – Not performed (provide comments)

**** – If cleaning or other dust generation prevention activities required, provide appropriate description and ensure all items from 35 IAC 212.316(g)(2)(D) are noted in Comments. For water/chemical application, include location controlled, application rate, frequency, and width, and total volume applied. If chemical applied, specify type and dilution. If physical controls utilized (e.g., sweeping), provide adequate information similar to water/chemical application.**

****Comments – Add any other pertinent information. For example, add a note such as "rain," "driveway is wet," or "no dust being generated." Also provide justification if dust suppression is required but not performed.**

MAINTAIN RECORDS FOR 3-YEARS, MINIMUM

APPENDIX C
SUMMARY OF REVISIONS

©2021, DAI Environmental, Inc.

This table provides a summary of revisions/modifications to the facility Fugitive Dust Operating Program

Original Date of Plan: October 29, 2021

Date	Revised Section	Brief Description of Modification	Reason for Modification