City Use Only	City Use Only	City Use Only
City Vendor No.	Vendor Name	City Contract/PO No.

I

HELIX FOUNDATION POLE BASES AND HELIX FOUNDATION POLE BASES CABLE ANTI-THEFT DEVICES

Specification Number: 134551

Issued by:
CITY OF CHICAGO DEPARTMENT OF PROCUREMENT SERVICES

Required for use by:
CITY OF CHICAGO DEPARTMENT OF TRANSPORTATION

Bidder Inquiry Deadline: 4:00 PM Central Time, August 11, 2016. Inquiries must be in writing.

Bid Opening Date: August 25, 2016

Bid Opening Time: 11:00 AM Central Time
Bid Opening Location: Bid & Bond Room, City Hall, Room 103, 121 N. LaSalle Street, Chicago, Illinois 60602

Information: Gary S. Bell, Assistant Procurement Officer
Email: gary.bell@cityofchicago.org, **Fax**: 312-744-5611, **Phone**: 312-744-6562
DPS Address: City Hall, Room 806, 121 North LaSalle Street, Chicago, Illinois 60602
DPS Web: www.cityofchicago.org/procurement and www.cityofchicago.org/bids

---

Execute and submit one (1) complete original bid package. All signatures to be sworn to before a Notary Public. Bid must be received in the City of Chicago Department of Procurement Services (DPS) Bid & Bond Room no later than the date and time above during regular business hours (8:30 AM to 4:30 PM Central Time). Bids will be read publicly. Bid package must be complete and returned in its entirety. Do not scan or recreate the bid package, the original must be used.
Bid must be submitted in sealed envelope(s) or package(s). The outside of the envelope or package must clearly indicate the name of the project, **Helix Foundation Pole Bases And Helix Foundation Pole Bases Cable Anti-Theft Devices**, the specification number, **134551**, the time and date specified for receipt and marked "**Bid Enclosed**". The name, address and phone number of the Bidder must also be clearly printed on the outside of all envelope(s) or package(s).

Bid Deposit:	None	**DPS Unit:**	Commodities
Performance Bond:	None	**Reverse Auction:**	No
City Business Preference	Yes	**Drawings:**	2
Local Manufacture Preference	Yes	**Exhibits:**	3
Alternative Fuel Vehicle Pref.	Yes	**Maps:**	None
Bid Specific Goals:	0% MBE and 0% WBE	**Contract Term:**	60 Months
Funding Source:	Non-Federal	**Start Date:**	_____
Fund Number:	015-0400-0842015-0140-220140 and Various	**Expiration Date:**	_____

Rahm I. Emanuel
Mayor

Jamie L. Rhee
Chief Procurement Officer

Table of Contents

Article 1. Requirements for Bidding and Instructions to Bidders 2
1.1. The Bid Documents 2
1.2. Obtaining the Bid Documents 2
1.2.1. Printed Bid Documents 2
1.2.2. Downloadable Bid Documents 2
1.3. Clarifications and Addenda 2
1.4. Examination of the Bid Documents and Work Site 3
1.5. Pre-Bid Conference and Site Visit 3
1.6. Questions Regarding the Bid Documents; Bidder Inquiry Deadline 3
1.7. Exceptions 3
1.8. Taxes Included in Bid Prices 4
1.9. Bid Prices Must Incorporate All Costs 4
1.10. Completion of the Bid Documents 4
1.11. Conflicts of Interest 4
1.12. Required Forms and Fees 4
1.12.1. Certificate of Filing for Online EDS 4
1.12.2. MBE/WBE Program 4
1.12.3. Bid Deposits and Bid Bonds 5
1.12.4. Performance and Payment Bonds 5
1.12.5. Contractor's Financial Statement 5
1.12.6. Other Required Forms and Documents 6
1.13. Trade Names and Substitutions 6
1.14. Authorized Dealer/Distributor 7
1.15. Estimated Quantities 7
1.16. Submission of Bids 7
1.16.1. Date, Time, and Place 7
1.16.2. Bids Must Be Sealed and Properly Labeled 7
1.16.3. Bidders Are Responsible for Bid Delivery 7
1.16.4. Transparency Website; Trade Secrets 7
1.17. Withdrawal of Bids 8
1.18. Bid Opening 8
1.19. Effective Term of Bid 8
1.20. Evaluation of Bids 8
1.20.1. Determination of Responsiveness 8
1.20.1.1. Must Bid All Line Items 8
1.20.1.2. Mathematical Calculations 9
1.20.1.3. Unbalanced Bids 9
1.20.1.4. Cash Billing Terms 9
1.20.2. Determination of Responsibility 9
1.20.2.1. Bidder Debts or Defaults 9
1.20.2.2. Competency of Bidder 9
1.21. Rejection of Bids and Waiver of Informalities 9
1.22. Statutory Adjustments to the Bid 9
1.22.1. City-based Businesses (Chicago Business Preference) 9
1.22.2. Locally Manufactured Goods 10

1.22.3. Alternatively Powered Vehicles Bid Incentive 11
1.22.3.1. Definitions for Alternatively Powered Vehicles Bid Incentive 11
1.22.3.2. Eligibility for Alternatively Powered Vehicles Bid Incentive 12
1.22.4. Joint Ventures Between Small Business Enterprises and Veteran-Owned Business Enterprises 12
1.22.5. Child Support Arrearage 13
1.22.6. MacBride Principles Ordinance 13
1.23. Consideration of Bids 14
1.24. Bid Protests 14
1.25. Award of Contract; Notice of Award 14
1.26. Title VI Solicitation Notice 14
Article 2. Incorporation of Exhibits 15
Article 3. Standard Terms And Conditions 16
3.1. General Provisions 16
3.1.1. Definitions 16
3.1.2. Interpretation of Contract 17
3.1.2.1. Order of Precedence 17
3.1.2.2. Interpretation and Rules 17
3.1.2.3. Severability 18
3.1.2.4. Entire Contract 18
3.1.3. Subcontracting and Assignment 18
3.1.3.1. No Assignment of Contract 18
3.1.3.2. Subcontracts 18
3.1.3.3. No Pledging or Assignment of Contract Funds Without City Approval 18
3.1.3.4. City's Right to Assign 18
3.1.3.5. Assigns 18
3.1.4. Contract Governance 19
3.1.4.1. Governing Law and Jurisdiction 19
3.1.4.2. Consent to Service of Process 19
3.1.4.3. Cooperation by Parties and between Contractors 19
3.1.4.4. No Third Party Beneficiaries 19
3.1.4.5. Independent Contractor 20
3.1.4.6. Authority 20
3.1.4.7. Joint and Several Liability 20
3.1.4.8. Notices 20
3.1.4.9. Amendments 20
3.1.4.10. No Waiver of Legal Rights 21
3.1.4.11. Non-appropriation of Funds 21
3.1.4.12. Participation By Other Government Agencies 21
3.1.5. Confidentiality 21
3.1.6. Indemnity 22
3.1.7. Non-Liability of Public Officials 23
3.1.8. Contract Extension Option 23
3.2. Compensation Provisions 23
3.2.1. Ordering, Invoices, and Payment 23
3.2.1.1. Purchase Orders 23
3.2.1.2. Invoices 23
3.2.1.3. Payment 24

3.2.1.4. Electronic Ordering and Invoices 24
3.2.1.5. City Right to Offset 24
3.2.1.6. Records 24
3.2.1.7. Audits 24
3.2.1.7.1. City's Right to Conduct Audits 24
3.2.1.7.2. Recovery for Over-Billing 24
3.2.2. Subcontractor Payment Reports 25
3.2.3. Prompt Payment to Subcontractors 25
3.2.3.1. Incorporation of Prompt Payment Language in Subcontracts 25
3.2.3.2. Payment to Subcontractors Within Seven Days 26
3.2.3.2.1. Reporting Failures to Promptly Pay 26
3.2.3.2.2. Whistleblower Protection 26
3.2.3.3. Liquidated Damages for Failure to Promptly Pay 26
3.2.3.4. Action by the City 27
3.2.3.5. Direct Payment to Subcontractors By City 27
3.2.4. General Price Reduction – Automatic Eligibility for General Price Reductions 27
3.3. Compliance With All Laws 27
3.3.1. General 27
3.3.2. Certification of Compliance with Laws 28
3.3.3. Federal Affirmative Action 28
3.3.4. Civil Rights Act of 1964, Title VI, Compliance With Nondiscrimination Requirements 28
3.3.4.1. Compliance with Federal Nondiscrimination Requirements 28
3.3.4.2. Non-discrimination 29
3.3.4.3. Solicitations for Subcontracts, Including Procurements of Materials and Equipment 29
3.3.4.4. Information and Reports 29
3.3.4.5. Sanctions for Noncompliance 30
3.3.4.6. Incorporation of Provisions 30
3.3.5. Other Non-Discrimination Requirements 30
3.3.5.1. Illinois Human Rights Act 30
3.3.5.1.1. Generally 30
3.3.5.1.2. State of Illinois Equal Employment Opportunity Clause 30
3.3.5.2. Chicago Human Rights Ordinance MCC Ch. 2-160 31
3.3.5.3. Business Enterprises Owned by People With Disabilities (BEPD) 31
3.3.6. Wages 31
3.3.6.1. Minimum Wage, Mayoral Executive Order 2014-1 32
3.3.6.2. Living Wage Ordinance 32
3.3.6.3. Equal Pay 33
3.3.7. Economic Disclosure Statement and Affidavit and Appendix A ("EDS") 33
3.3.7.1. Business Relationships With Elected Officials MCC Sect. 2-156-030(b) 34
3.3.7.2. MCC 1-23 and 720 ILCS 5/33E Bribery, Debts, and Debarment Certification 34
3.3.7.3. Federal Terrorist (No-Business) List 35
3.3.7.4. Governmental Ethics Ordinance 2-156 35
3.3.7.5. Lobbyists 35
3.3.8. Restrictions on Business Dealings 35
3.3.8.1. Conflicts of Interest 35
3.3.8.2. Prohibition on Certain Contributions, Mayoral Executive Order 2011-4 35
3.3.9. Debts Owed to the City; Anti-Scofflaw, MCC Sect. 2-92-380 36

3.3.10. Other City Ordinances and Policies....37
3.3.10.1. False Statements....37
3.3.10.2. MacBride Principles Ordinance, MCC Sect. 2-92-580....37
3.3.10.3. City Hiring Plan Prohibitions....37
3.3.10.4. Inspector General....38
3.3.10.5. Duty to Report Corrupt Activity....38
3.3.10.6. Electronic Mail Communication....38
3.3.10.7. EDS Update Obligation....38
3.3.10.8. Wheel Tax (City Sticker)....38
3.3.11. Compliance with Environmental Laws and Related Matters....39
3.3.11.1. Definitions....39
3.3.11.2. Joint Ventures....39
3.3.11.3. Compliance With Environmental Laws....39
3.3.11.4. Costs....39
3.3.11.5. Proof of Noncompliance; Authority; Cure....40
3.3.11.6. Copies of Notices and Reports; Related Matters....40
3.3.11.7. Requests for Documents and Information....41
3.3.11.8. Environmental Claims and Related Matters....41
3.3.11.9. Preference for Recycled Materials....41
3.3.11.10. No Waste Disposal in Public Way MCC 11-4-1600(E)....41
3.4. Contract Disputes....42
3.4.1. Procedure for Bringing Disputes to the Department....42
3.4.2. Procedure for Bringing Disputes before the CPO....42
3.5. Events of Default and Termination....42
3.5.1. Events of Default....42
3.5.2. Cure or Default Notice....43
3.5.3. Remedies....44
3.5.4. Non-Exclusivity of Remedies....44
3.5.5. City Reservation of Rights....44
3.5.6. Early Termination....44
3.6. Department-specific Requirements....45
3.6.1. Department of Aviation Standard Requirements....45
3.6.1.1. Confidentiality of Airport Security Data....45
3.6.1.2. Aviation Security....45
3.6.1.3. Airport Security Badges....45
3.6.1.4. General Requirements Regarding Airport Operations....46
3.6.1.4.1. Priority of Airport Operations....46
3.6.1.4.2. Interruption of Airport Operations....47
3.6.1.4.3. Safeguarding of Airport Property and Operations....47
3.6.1.4.4. Work on the Airfield....47
3.6.1.4.5. Parking Restrictions....48
3.6.1.5. General Civil Rights (Airport and Airway Improvement Act of 1982, Section 520)....48
3.6.2. Emergency Management and Communications (OEMC) Security Requirements....48
3.6.2.1. Identification of Workers and Vehicles....48
3.6.2.2. Access to Facilities....48
3.6.2.3. Security Badges and Vehicle Permits....49
3.6.2.4. Gates and Fences....50
3.6.2.5. Hazardous or Illegal Materials....50

3.6.3. Chicago Police Department Security Requirements 50
3.6.4. Department of Water Management ("DOWM") Security Requirements 50
3.6.4.1. Identification of Workers and Vehicles 50
3.6.4.2. Access to Facilities 51
3.6.4.3. Security Badges and Vehicle Permits 51
3.6.4.4. Gates and Fences 52
3.6.4.5. Hazardous or Illegal Materials 52
Article 4. Terms for Supply Contracts 54
4.1. Blanket Releases / Purchase Orders 54
4.2. Delivery and Acceptance 54
4.2.1. Delivery 54
4.2.2. Inspection and Defects 54
4.2.3. Shipment errors 55
4.2.4. Acceptance 55
4.3. Centralized Invoice Processing 55
4.4. Unspecified Items 56
4.5. Quality, Source, Substitution, and Labeling 56
4.5.1. Quality 56
4.5.2. Source 56
4.5.3. Substitution 56
4.5.4. Testing Laboratory Labels 57
4.6. Manufacturer's Warranty & Product Information 57
4.7. Contractor's Warranties 57
Article 5. Scope of Work and Detailed Specifications 58
5.1. General 58
5.2. Intent 58
5.3. Basis of Award 58
5.4. Funding 58
5.5. Technical Requirements 58
5.5.1. Specifications 58
5.5.2. Material 58
5.5.3. General Construction 59
5.5.4. Construction 59
5.5.5. Samples 59
5.5.6. Materials Inspection and Responsibility 60
5.5.7. Standard Helix Pole Foundation Bases 60
5.6. Price Adjustment 60
5.7. Inventory/Lead Time 61
5.8. No Stated Goals for MBE/WBE Participation 61
5.9. Additional Requirements 61
5.9.1. Contract Term 61
5.9.1.1. Initial Term 61
5.9.1.2. Term Extension 61
Article 6. Special Conditions Regarding Minority Business Enterprise Commitment and Women Business Enterprise Commitment For Commodities or Services 62
6.1. Policy and Terms 62
6.2. Definitions 63
6.3. Joint Ventures 64

6.4. Counting MBE/WBE Participation Toward the Contract Specific Goals 66
6.5. Regulations Governing Reductions to or Waiver of MBE/WBE Goals 67
6.5.1. Direct / Indirect Participation 68
6.5.2. Assist Agency Participation in wavier/reduction requests 69
6.5.3. Impracticability 69
6.6. Procedure to Determine Bid Compliance 70
6.7. Reporting Requirements During the Term of the Contract 71
6.8. Changes to Compliance Plan 72
6.8.1. Permissible Basis for Change Required 72
6.8.2. Procedure for Requesting Approval 73
6.9. Non-Compliance and Damages 73
6.10. Arbitration 74
6.11. Equal Employment Opportunity 74
6.12. Attachments and Schedules 75
Attachment A –Assist Agency List 76
Attachment B - Sample Format for Requesting Assist Agency Comments on Bidder's Request for Reduction or Waiver of MBE/WBE Goals 78
Schedule B – Affidavit of Joint Venture 79
Schedule C-1: Letter of Intent From MBE/WBE To Perform As Subcontractor, Supplier and/or Consultant 84
Schedule D-1: Affidavit of Implementation of MBE/WBE Goals and Participation Plan 85
Article 7. Insurance Requirements 90
7.1. Insurance to be Provided 90
7.1.1. Workers Compensation and Employers Liability 90
7.1.2. Commercial General Liability (Primary and Umbrella) 90
7.1.3. Automobile Liability (Primary and Umbrella) 90
7.1.4. All Risk Property 90
7.2. Additional Requirements 90
Article 8. Economic Disclosure Statement and Affidavit (EDS) 92
8.1. Online EDS Filing Required Prior To Bid Opening 92
8.2. Online EDS Web Link 92
8.3. Online EDS Number 92
8.4. Online EDS Certification of Filing 92
8.5. Preparation Checklist for Registration 93
8.6. Preparation Checklist for EDS Submission 93
8.7. EDS Frequently Asked Questions 94
Article 9. Proposal Pages 98
Article 10. Bidder Contact Information 100
City-Based Business Affidavit 101
Bidder's Commitment To Provide Locally Manufactured Goods Affidavit 102
Local Manufacturing Affidavit 103
Eligible Business For Bid Incentive For Alternatively Powered Vehicles Affidavit 104
Small Business Enterprise And Veteran-Owned Business Enterprise Joint Venture Affidavit 105
Sweatshop-Free Procurement Affidavit 106
Article 11. Execution And Acceptance Pages 107
11.1. Bid Execution By a Corporation 108
11.2. Bid Execution By A Joint Venture 109
11.3. Bid Execution By A Partnership 110

11.4. Bid Execution By a Sole Proprietor 111
11.5. Bid Acceptance by City 112
EXHIBITS 113
Exhibit 1: Insurance Certificate of Coverage 114
Exhibit 2: Detailed Specification for Helix Foundation Poles #1526 and Helix Foundations Cable Anti-Theft Device #1593 115
Exhibit 3: Drawings For Helix Foundation Poles #936 And Helix Foundation Cable Anti-Theft Devices #982 116

Missing Information, Documents, and/or Bonds May Invalidate Your Bid.

To help ensure that you are submitting a complete bid, place an "X" next to each item below after completing and incorporating the item into your bid package. Write "N/A" if an item does not apply to your bid.

1. _____ Bid Submittal Checklist
2. _____ Insurance Certificate of Coverage
3. _____ MBE/WBE Compliance Plan
    a. _____ Schedule B – Affidavit of Joint Venture MBE/WBE – (only if bidder is a joint venture)
    b. _____ Schedule C-1: Letter(s) of Intent from MBE/WBE to Perform as Sub-contractor, Supplier and/or Consultant (if applicable).
    c. _____ Schedule D-1: Affidavit of MBE/WBE Goal Implementation Plan (if applicable).
    d. _____ Request for a reduction or waiver of MBE/WBE goals (if applicable)
4. _____ Certificate of Filing of Economic Disclosure Statement and Affidavit (EDS)
5. _____ Bid incentive/preference affidavit(s): Chicago Business, Local Manufacture, and/or Alternatively Powered Vehicles (if applicable)
6. _____ Sweatshop Free Procurement Affidavit (if specification is for purchase of garments)
7. _____ Proposal Page(s) (Schedule of Prices)
8. _____ Bid Execution Page
9. _____ Bid Deposit (if required)

NOTE: Each page requiring a signature must be signed by the person with proper authority and sworn before a Notary Public where noted.

NOTE: Each Bidder must acknowledge the receipt of a full set of Bid Documents and any and all Addenda at the top of the Bid Execution Page.

ARTICLE 1. REQUIREMENTS FOR BIDDING AND INSTRUCTIONS TO BIDDERS

Read this carefully before preparing your bid.

1.1. The Bid Documents

The Bid Documents include this Invitation for Bids, Legal Advertisement Notice, Bid Proposal Pages, Requirements for Bidding and Instructions for Bidders, Standard Terms and Conditions, Special Conditions, Scope of Work and Detailed Specifications, Plans and Drawings (if any), Insurance Requirements, MBE/WBE Special Conditions or DBE Special Conditions (as applicable) and all other exhibits attached hereto, and any and all Clarifications and Addenda issued by the City. Upon the award and execution of a contract pursuant to the Bid Documents, the Bid Documents become the Contract Documents.

1.2. Obtaining the Bid Documents

Bidders are solely responsible for obtaining all Bid Documents, including Clarifications and Addenda.

In the event of a conflict or inconsistency between the Bid Documents obtained on-line and the printed Bid Documents available from the Bid & Bond Room, the terms and conditions of the printed Bid Documents will prevail.

1.2.1. Printed Bid Documents

Printed copies of Bid Documents are available for pickup from:

Bid & Bond Room
Room 103 City Hall
121 North LaSalle Street
Chicago, IL 60602
Phone # 312-744-9773
Fax # 312-744-5611

Plans and Drawings may only be available on CD.

1.2.2. Downloadable Bid Documents

Documents may be downloaded from the DPS' website at the following URL:

www.cityofchicago.org/bids

In order to receive notice of clarifications and addenda, Bidders that download the Bid Documents must register as a Bid Document Holder by (i) faxing the company's name, contact person, address, e-mail address, telephone number and fax number to the Bid & Bond Room at 312-744-5611 (include specification number and bid title/description) or (ii) by calling the Bid & Bond Room at 312-744-9773.

Bid Document Holders are listed on the Bid & Bond Room Opportunity Take Out List. The Opportunity Take Our List is public information and is posted to the DPS web site at www.cityofchicago.org/TOL. To find Opportunity Take Out lists go to "Get Started Online" and search by the specification number.

1.3. Clarifications and Addenda

The City sends out clarifications and addenda to the Bid Documents to entities on the list of registered Bid Document Holders. Additionally, Clarifications and Addenda will be posted at the following URL, and made available at the Bid & Bond Room:

www.cityofchicago.org/bids

Bidders that download Bid Documents from the City of Chicago's website instead of obtaining the Bid Documents from the City of Chicago's Bid & Bond Room and which have not registered as a Bid Document Holder are responsible for checking the City of Chicago's website for Clarifications and/or Addenda.

There may be multiple Clarifications and Addenda. Failure to obtain Clarifications and/or Addenda, for whatever cause, will not relieve a Bidder from the obligation to bid according to and comply with any changed or additional terms and conditions contained in the Clarifications and Addenda.

Failure to acknowledge Clarifications and/or Addenda in the Bid Documents when submitting the bid will render the bid non-responsive. Any harm to the bidder resulting from failure to obtain all necessary documents, for whatever cause, will not be valid grounds for a protest against award(s) made under this bid solicitation.

1.4. Examination of the Bid Documents and Work Site
Bidders are required to carefully examine all of the Bid Documents before completing the forms and submitting a Bid. If the specification calls for work to be performed onsite, Bidders are also required to inspect the site of the work to be performed, and familiarize itself with the conditions at the site that will affect the work.

A Bidder that is awarded a contract will be solely responsible for all costs arising from and associated with that Bidder's (i) failure to comply with the requirements of the Bid Documents, including, without limitation, this requirement to inspect the Bid Documents and site of the work, and (ii) failure to include any costs or expense attributable to site conditions that could have reasonably been discovered through a site inspection or examination of the Bid Documents.

1.5. Pre-Bid Conference and Site Visit
If a pre-bid conference will be held to answer questions regarding these Bid Documents, it will be held on the date and time stated on the front cover of the Bid Documents. The pre-bid conference may be recorded by DPS.

If a pre-bid conference will be held, attendance is strongly encouraged. The Chief Procurement Officer or his/her representative, as well as representatives from the City Department for which the Bid Documents have been issued will comprise the panel to respond to Bidders' questions.

Bidders must familiarize themselves with the locations for contract performance required by the Bid Documents and take into account all relevant conditions when preparing its Bid. The Contractor will not be paid additional compensation due to failure to account for conditions that may be observed by a site visit in its bid.

If the site for the work is not accessible to the public during normal business hours, instructions for obtaining access, including a date and time for guided visits, is set out on the cover of the Bid Documents.

1.6. Questions Regarding the Bid Documents; Bidder Inquiry Deadline
All inquiries regarding the Bid Documents or procurement process must be directed to the Procurement Specialist/Senior Procurement Specialist at the email address listed on the front cover of the Bid Documents. **Inquiries must be submitted via email and MUST include the specification number in the subject line of the email.**

The Bidder Inquiry Deadline is listed on the front cover of the Bid Documents. Inquiries received after the Bidder Inquiry Deadline will not be answered except at the discretion of the Chief Procurement Officer.

Bidders may only rely on written answers in a Clarification or in an Addendum duly issued by the Chief Procurement Officer. Bidders cannot rely on oral or informal responses; such answers will not be binding upon the City.

1.7. Exceptions
Any deviations from or exceptions to any provisions or requirements of the Bidding documents, including but not limited to the specifications of the goods and/or services to be provided, must be noted on the Proposal Page(s) or attached thereto, with the exact nature of the change outlined in sufficient detail, and as provided below under "Trade Names and Substitutions," as applicable. Bidder must provide the reason for which deviations were made. Failure of a Bidder to comply with the terms of this paragraph may be cause for rejection of its Bid.

If a Bidder takes exception to or deviates from any provision or requirement, the Chief Procurement Officer shall reject the Bid as non-responsive in the event that the Chief Procurement Officer, in his or her sole opinion, determines such exception(s) or deviations to be material.

1.8. Taxes Included in Bid Prices
With few exceptions, materials purchased by the City of Chicago are not subject to the Federal Excise Tax. The Illinois Retailers' Occupation Tax, Use Tax, and Municipal Retailers' Occupation Tax do not apply to materials or services purchased by the City of Chicago.

Bidders shall include all other applicable federal, state and local taxes, direct or indirect, in their Bid Prices.

1.9. Bid Prices Must Incorporate All Costs
Bid pricing must incorporate any/all peripheral costs including, but not limited to the costs of products/services, delivery/transportation charges, training, materials, labor, insurance, applicable taxes, warranty, overhead and profit, etc. that are required by the Bid Documents.

1.10. Completion of the Bid Documents
Each Bidder must complete all of the forms listed on the Bid Submittal Checklist, if a Checklist is provided. The forms, including the Bid Proposal Pages, must be completed in ink, or typewritten. Bidders may not change any of the Bid Documents. Any changes made by a Bidder to the Bid Documents may result in rejection of the Bid, and will not be binding upon the City.

Bidders must use the Bid Execution Page that is appropriate for their form of business organization (e.g., sole proprietorship, corporation, partnership, or joint venture). The individual(s) that sign the Bid Execution Page on behalf of the Bidder, by their signature, represents and warrants to the City that such individual is authorized to execute bids and contracts on behalf of the Bidder, and that the Bidder agrees and shall be bound to all of the terms and conditions of the Bid Documents and, upon execution by the City, the Contract Documents. Signatures must be sworn before a Notary Public.

1.11. Conflicts of Interest
If any Bidder (or any partner in a joint venture or partnership or any member of the limited liability company if the Bidder is a joint venture, partnership, LLP, or LLC) has assisted the City in the preparation of these Bidding Documents such that provision of such assistance would give Bidder an unfair advantage or otherwise impair the integrity of the procurement process, or if Bidder has an organizational conflict of interest that might compromise Bidder's ability to perform the contract, that Bidder may be disqualified from bidding. If applicable, Bidder must provide a statement and information disclosing its participation with respect to the Bid Documents and/or potential organizational conflicts of interest.

1.12. Required Forms and Fees

1.12.1. Certificate of Filing for Online EDS
Bidders must complete an online EDS prior to the bid due date. A Bidder who does not file an electronic EDS prior to the bid due date may be found non-responsive and its bid rejected. If you are unable to complete the EDS online and print a Certificate of Filing prior to the response due date, the City will accept a paper EDS provided written justification is provided explaining the Bidders good faith efforts to complete it before the response due date and the reasons why it could not be completed. Refer to the Instructions for Completing Economic Disclosure Statement and Affidavit On-Line.

1.12.2. MBE/WBE Program
The goals for MBE and WBE participation are set forth in the Proposal Pages. The rules, regulations, and forms for achieving these goals are set forth in the Special Conditions Regarding Minority Business Enterprise Commitment and Women Business Enterprise Commitment ("M/WBE Special Conditions").

- **Schedule B: Affidavit of Joint Venture** (if applicable)
  If applicable, complete and submit this form if a non-certified firm has formed a joint venture with one or more MBE/WBE certified firms to submit a Bid. Such Affidavit should be signed by the appropriate Joint Venture members and notarized.

- **Schedule C-1**

If applicable, include a completed Letter of Intent from each certified MBE or WBE that will perform as a Subcontractor, Supplier and/or Consultant. Such letter(s) must be signed and notarized.

- **Schedule D-1**
  If applicable, include the Bidder's Affidavit of MBE/WBE Goal Implementation Plan. This Affidavit must be signed and notarized.

- **Request for a Reduction or Waiver of the MBE/WBE Goals**
  If applicable, after making good faith efforts, the Bidder is unable to provide a plan for the utilization of MBE and WBE firms that will achieve compliance with the MBE/WBE goals, the Bidder must, as required by the MBE/WBE Special Conditions, submit a request for whole or partial waiver of the goals with its Bid. Any waiver request must include documentation as required by the M/WBE Special Conditions including but not limited to notification to an assist agency.

1.12.3. Bid Deposits and Bid Bonds

Bid deposits, if required, may be in the form of a bond, certified check, cashier's check or money order payable to the City of Chicago. Bid bonds must be in the form provided by the Department of Procurement Services, and must be executed by a surety licensed and authorized to do business in the State of Illinois.

Cash is not an acceptable form of bid deposit. Substantial failure to comply with bid deposit requirements will result in rejection of the bid. A non-substantial failure to comply with the bid deposit requirement is a failure that does not provide a commercial advantage to the Bidder over other bidders.

Bid deposits will be returned, with the exception of the bid bond deposit for the contract awardee's bid, after the CPO has awarded the contract. The bid bond deposit for the awardee's bid will be returned after the contract has been awarded and a satisfactory performance and payment bond has been approved by the City, where such bond is required.

The Chief Procurement Officer may return bid deposits sooner, but reserves the right to hold all bid deposits until a contract has been awarded or, in the case of multiple awards, all contracts have been awarded for the Bid in question.

If a bid deposit is required, it will be indicated on the front cover of the Bid Documents.

1.12.4. Performance and Payment Bonds

If a performance and payment bond is required, failure to provide the required bond within the required time period when requested will result in rejection of the bid and forfeit of the bid deposit, if a deposit was required. The forfeiture shall not limit any other City remedies against the Bidder. Performance and payment bonds must be in the form specified by the City, a specimen of which will be attached to the Bid Documents as an exhibit or available from the Bid & Bond Room.

MCC Section 2-92-040 requires that the surety be listed as a certified surety in the current edition of U.S. Treasury Department Circular 570 and have an underwriting limitation in that publication in an amount greater than the amount bid. Circular 570 is available at www.fms.treas.gov/c570. Co-sureties may be accepted in the sole discretion of the CPO, but each co-security must individually meet the requirement. Reinsurance may not be used to achieve a sufficient underwriting limitation.

If a performance and payment bond is required to be provided prior to contract award, it will be indicated on the front cover of the Bid Documents.

1.12.5. Contractor's Financial Statement

If requested by the Chief Procurement Officer, Bidder must file a "Contractor's Statement of Experience and Financial Condition" dated not earlier than the end of Bidder's last fiscal year period. The "Contractor's Statement of Experience and Financial Condition" will be kept on file as a representative statement for one year. The "Contractor's Statement of Experience and Financial Condition" forms are

available in the Bid & Bond Room, City Hall Room 103, Chicago, IL 60602, or may be downloaded at www.cityofchicago.org/form. Failure to provide a "Contractor's Statement of Experience and Financial Condition" if requested may be cause for rejection of the Bid.

1.12.6. Other Required Forms and Documents

Other forms required to be included with the Bid are:

- Insurance Certificate of Coverage
- Affidavit of Chicago Business (if applicable)
- Affidavit of Locally-Manufactured Goods (if applicable)
- Alternatively Powered Vehicles Affidavit (if applicable)
- DBE or MBE/WBE compliance forms as applicable
- Proposal Page(s) (Schedule of Prices)
- Bid Execution Page

1.13. Trade Names and Substitutions

Reference to a specific manufacturer or trade name in this solicitation is intended to be descriptive (but not restrictive) and to indicate to prospective bidders those product(s) that have been deemed by the City to be satisfactory. The Bidder must, if awarded the Contract, provide the product(s) specified, unless equivalent alternatives have been proposed as described below and found acceptable to the Chief Procurement Officer.

A Bidder that chooses to respond to this solicitation for bids with alternate product(s) from those specified in the solicitation, must identify such alternate items with its Bid with a detailed explanation and documentation in support of how the alternate items proposed by the Bidder can perform as well as or better than those specified. Unless an alternate item is so identified, it is understood that the Bidder proposes, and will be required to provide, the specific item described in the specifications. No substitution of specified items will be allowed thereafter except as otherwise provided for in the specifications.

Documentation in support of alternate items includes:

1) Complete data substantiating compliance of proposed alternate items with requirements stated in the solicitation, including:
    a) Product identification, including manufacturer's name and address.
    b) Manufacturer's literature identifying:
        i) Product description
        ii) Reference standards
        iii) Performance and test data
    c) Samples, as applicable
    d) Name and address of similar projects on which the product has been used, and date of usage.
2) Itemized comparison of the proposed alternate item with product or service specified; listing of significant variations.

A Bidder warrants and represents that in making a formal request for substitution with alternate items that:

1) The proposed alternate item is equivalent to or superior in all respects to the product specified, and
2) The same warranties and guarantees will be provided for the alternate item as for the product specified.

The CPO may, in his or her sole discretion, accept an alternate item for a specified item, provided the alternate item so bid is, in the CPO's sole opinion, the equivalent of the item specified in the solicitation. An alternate item that the CPO determines not to be equivalent to the specified item shall render the bid non-responsive and the CPO shall reject the bid.

1.14. Authorized Dealer/Distributor

For bids involving the furnishing of equipment or other goods that are subject to manufacturer warranties that require sale or installation by authorized dealers or distributors, the Contractor must be the manufacturer or an authorized dealer/distributor of the proposed manufacturer and be capable of providing genuine parts, assemblies and/or accessories as supplied by the manufacturer. Further, the Contractor must be capable of furnishing original product warranty and manufacturers related services such as product information, product recall notices, etc. The Bid Documents will typically ask the Bidder to certify that it is an authorized dealer/distributor when this requirement is applicable. The Bidder's compliance with these requirements will be determined by the CPO, whose decision will be binding.

1.15. Estimated Quantities

Unless explicitly stated to the contrary in the Scope of Work, Detailed Specifications, or Proposal pages, any quantities shown on the Proposal Pages represent estimated usage and as such are for bid canvassing purposes only. The City reserves the right to increase or decrease quantities ordered. Nothing herein will be construed as intent on the part of the City to procure any goods or services beyond those determined by the City to be necessary to meet its needs.

The City will only be obligated to order and pay for such quantities as are from time to time ordered, performed and accepted on Blanket Releases issued directly by the Department.

1.16. Submission of Bids

1.16.1. Date, Time, and Place

Bids are to be delivered to the Bid & Bond Room of the Department of Procurement Services, City Hall Room 103, 121 North LaSalle Street, Chicago, Illinois 60602 on the date and prior to the time stated on the cover of the Bid Documents, or any addendum issued by the City to change such date and/or time. No bid will be accepted after the date and time specified. The time of the receipt of the bid will be determined solely by the clock located in the Bid & Bond Room.

Bids must be dropped off in the Bid & Bond Room during regular business hours: 8:30 am to 4:30 pm, Monday through Friday, excluding Holidays of the City.

1.16.2. Bids Must Be Sealed and Properly Labeled

All Bids must be submitted in sealed envelopes. The Department of Procurement Services provides official bid enclosure envelopes at the Bid & Bond Room. Use of official envelopes is not required but is preferred.

All envelopes containing Bids must be marked “Bid Enclosed,” and must have the Bidder’s name and address, the Specification Number, and the advertised date and time of bid opening stated on the envelope. Failure to properly mark the envelope may result in a failed delivery, and result in rejection of the Bid. If more than one envelope is needed to submit the Bid, each envelope must be marked with all the information required above and be marked to indicate that the envelopes belong together (e.g., one of three, two of three).

1.16.3. Bidders Are Responsible for Bid Delivery

Each Bidder is solely and completely responsible for delivery of its Bid to the Bid & Bond Room before the date and time established for the Bid opening. Any Bid that is not delivered on time, including Bids mistakenly delivered to other City offices, will not be accepted. The City is under no obligation to ensure that misdirected Bids are delivered to the Bid & Bond Room prior to Bid opening.

When bids are sent via U.S. Postal Service, messenger, printing service or any other carrier, Bidder is responsible for their delivery and drop-off to the correct location during business hours before the date and hour set for the opening of bids. It is Bidder's sole responsibility to ensure the Bid is delivered to the correct location and received as required.

Bids are not to be delivered after hours by pushing them under the door.

1.16.4. Transparency Website; Trade Secrets

Consistent with the City's practice of making available all information submitted in response to a public procurement, all bids, any information and documentation contained therein, any additional information or documentation submitted to the City as part of this solicitation, and any information or documentation presented to City as part of negotiation of a contract or other agreement may be made publicly available through the City's Internet website.

However, Bidders may designate those portions of a Bid which contain trade secrets or other proprietary data ("Data") which Bidder desires remain confidential.

To designate portions of a Bid as confidential, Bidder must:

A. Mark the cover page as follows: "This bid includes trade secrets or other proprietary data."

B. Mark each sheet or Data to be restricted with the following legend: "Confidential: Use or disclosure of data contained on this sheet is subject to the restriction on the title page of this bid."

C. Provide a CD-ROM with a redacted copy of the entire bid or submission in .pdf format for posting on the City's website. Bidder is responsible for properly and adequately redacting any Data which Bidder desires remain confidential. If entire pages or sections are removed, they must be represented by a page indicating that the page or section has been redacted. Failure to provide a CD-ROM with a redacted copy may result in the posting of an un-redacted copy.

Indiscriminate labeling of material as "Confidential" may be grounds for deeming a bid as non-responsive.

All Bids submitted to the City are subject to the Freedom of Information Act. The City will make the final determination as to whether information, even if marked "confidential," will be disclosed pursuant to a request under the Freedom of Information Act, valid subpoena, or other legal requirement. Bidder agrees not to pursue any cause of action against the City with regard to disclosure of information.

1.17. Withdrawal of Bids

Bidders may withdraw their Bid at any time prior to the date and time for Bid opening. Requests for withdrawal must be made in writing on the Bidder's letterhead to the Bid & Bond Room. Bidders must make their own arrangements for the return of their Bids.

1.18. Bid Opening

Bids will be opened and read publicly in the Bid & Bond Room by the Department of Procurement Services immediately after the deadline for the submission of Bids has passed. Announcement of the Bids and the apparent low Bidder are neither final nor binding. All Bids and Bid Documents are subject to review by the Department of Procurement Services to determination the lowest responsive and responsible bidder and whether a contract will be awarded.

Bid tabulations are public information and are posted on the City's website www.cityofchicago.org/BidTab. URL is case sensitive. Select "Get Started Online" and search by specification number.

1.19. Effective Term of Bid

Unless a Bid is expressly rejected by the Chief Procurement Officer, all Bids will remain in effect for ninety (90) days subsequent to the Bid opening. The City may request that Bidders extend the effective period of their Bids. Such requests shall be in writing, and will require the Bidders' written consent to the extension.

Bidder may not withdraw or cancel or modify its Bid for a period of ninety (90) calendar days after the advertised closing time for the receipt of Bids. The City reserves the right to withhold and deposit, as liquidated damages, the bid deposit of any bidder requesting withdrawal, cancellation or modification of its Proposal prior to the ninety (90) day period.

1.20. Evaluation of Bids

1.20.1. Determination of Responsiveness

DPS will review Bids to determine whether they conform to the requirements of the Bid Documents.

1.20.1.1. Must Bid All Line Items

The Bidder must bid all Line Items set forth on the Proposal Pages, except to the extent that the Specification expressly allows otherwise. Bids submitted to the contrary will be considered incomplete and as a result, will be rejected as being non-responsive to this requirement.

Per the Basis of Award, if Contract(s) will be awarded per Group, Bidders must bid all items within a Group, except to the extent that the Specification expressly allows otherwise, but Bidders are not required to bid all Groups. Bids submitted to the contrary will be considered incomplete and as a result, will be rejected as being non-responsive to this requirement.

1.20.1.2. Mathematical Calculations

The Chief Procurement Officer reserves the right to make corrections, after receiving the bids, to any clerical error apparent on the face of the bid, including but not limited to obviously incorrect units or misplaced decimal points, or arithmetic errors. In the event that comparison of the Bidder's "Unit Price" and "Total Price" submitted for any line item reveals a calculation error, the Unit Price will prevail.

1.20.1.3. Unbalanced Bids

The Chief Procurement Officer reserves the right to reject any Bid that, in his or her sole discretion and authority, determines is materially unbalanced.

1.20.1.4. Cash Billing Terms

Cash billing discounts offered will not be considered in the evaluation of bids.

1.20.2. Determination of Responsibility

The determination of the responsibility of a Bidder is within the sole discretion and authority of the Chief Procurement Officer.

The Chief Procurement Officer may request any Bidder to submit such additional information pertaining to the Bidder's responsibility as the Chief Procurement Officer deems necessary. Failure to comply with any such request will result in a finding of non-responsibility and rejection of the Bid.

1.20.2.1. Bidder Debts or Defaults

The Chief Procurement Officer reserves the right to refuse to award a Contract to any bidder that is in arrears or is in default to the City upon any debt or contract, or that is a defaulter, as surety or otherwise, upon any obligation to the City, or has failed to perform faithfully any previous contract with the City.

1.20.2.2. Competency of Bidder

The Bidder, if requested, must present within a reasonable time, as determined by the Chief Procurement Officer, evidence satisfactory to the Chief Procurement Officer of ability to perform the Contract and possession of necessary facilities, pecuniary resources and adequate insurance to comply with the terms of these specifications and contract documents.

1.21. Rejection of Bids and Waiver of Informalities

The Chief Procurement Officer, in his/her sole discretion and authority, may determine that it is in the best interest of the City to reject any or all Bids submitted in response to any Invitation for Bids. The Chief Procurement Officer, in his/her sole discretion and authority, may disregard or waive any informality in the Bids or bidding process.

1.22. Statutory Adjustments to the Bid

1.22.1. City-based Businesses (Chicago Business Preference)

For purposes of this section only, the following definitions shall apply:

"City-based business" means a person who (i) conducts meaningful day-to-day business operations at a facility located within the city and reports such facility to the Internal Revenue Service as a place of employment for the majority of its regular, full-time workforce; (ii) holds any appropriate city license; and (iii) is subject to applicable city taxes. These taxes may include the City Wheel Tax as provided at Chapter 3-56 of the MCC.

"Contract" means any contract, purchase order or agreement awarded by the city and whose cost is to be paid from funds belonging to or administered by the city; provided that a contract does not include: (i) a delegate agency contract; (ii) a lease of real property; or (iii) a collective bargaining agreement.

"Prime Contractor" means a person who is a city- based business and the primary contractor on a contract. A "Prime Contractor" does not include any subcontractors.

If these Bid Documents pertain to a Contract having an estimated contract value of $100,000 or more, the CPO may apply a bid preference ("City Based Business Preference") of two percent of the contract base bid, in accordance with section 2-92-412 of the MCC, to any qualified bidder that is a Prime Contractor. If the CPO has determined that a City Based Business Preference may be applied, it will be indicated on the cover page of the Bid Documents.

If a City Based Business Preference is applied to a Bidder's Bid, the Local Goods Incentive pursuant to Section 2-92-410 of the MCC will not be applied to that same Bid.

Bidders desiring to take advantage of the City Based Business Preference must submit documentation with their Bid that Bidder is a City-Based Business.

1.22.2. Locally Manufactured Goods

For purposes of this section only, the following definitions shall apply:

"City-based manufacturer" means a person who: (i) holds any appropriate city license; (ii) is subject to applicable city taxes; and (iii) owns, operates, or leases a manufacturing facility within the city.

"Contract for Goods" means any contract, purchase order or agreement for the purchase of goods awarded by the city and whose cost is to be paid from funds belonging to or administered by the city; provided that a "contract" does not include: (i) a delegate agency contract; (ii) a lease of real property; (iii) a collective bargaining agreement; or (iv) a construction contract as defined in Section 2-92-670 of the MCC.

"Locally manufactured goods" means goods whose value, either in whole or in part, is derived from growing, producing, processing, assembling, or manufacturing activities that occur within a city-based manufacturer's facility located within the city.

"Manufacture" means to produce tangible goods for use from raw or prepared materials by giving the materials new forms, qualities, properties or combinations, whether by hand-labor or machines.

If these Bid Documents pertain to a contract for goods having an estimated contract value of $100,000 or more, the CPO may allocate a bid incentive ("Local Goods Incentive") in accordance with section 2-92-410 of the MCC. If the CPO has determined that a Local Goods Incentive will be allocated, it will be indicated on the cover page of the Bid Documents and shall consist of the following:

Total Dollar Value of Locally Manufactured Goods Provided in the Contract	Bid Incentive
25% to 49%	1% of the contract base bid
50% to 74%	1.5% of the contract base bid
75% or greater	2% of the contract base bid

Bidders desiring to take advantage of the Local Goods Incentive, if allocated, must submit documentation with their bid that the goods to be provided will be locally manufactured goods.

Upon completion of the work, any contractor that has failed to supply the required percentage of locally manufactured goods for which the Local Goods Incentive was allocated shall be fined in an amount equal to three times the amount of the difference between the bid incentive allocated and the bid incentive that would have been allocated to that contractor for the amount of locally manufactured

goods actually supplied under the contract, unless the contractor can demonstrate that due to circumstances beyond the contractor's control, the contractor for good cause was unable to provide the required percentage of locally manufactured goods.

1.22.3. Alternatively Powered Vehicles Bid Incentive

1.22.3.1. Definitions for Alternatively Powered Vehicles Bid Incentive

For purposes of this Section 1.22.3 only, the following definitions apply:

"Alternative fuel" has the meaning ascribed to that term in the Energy Policy Act of 1992, and the rules promulgated by the United States Department of Energy pursuant to that Act. The term "alternative fuel" includes but is not limited to natural gas, liquefied petroleum gas, hydrogen, ethanol E85 or electricity;

"Alternatively powered vehicle" means a vehicle that:

(A) is fueled by alternative fuel; provided that if a vehicle is capable of being powered by alternative fuel and traditional petroleum-based gasoline or petroleum-based diesel fuel, the vehicle must be powered by the alternative fuel for no less than 80% BTUs consumed during the three months prior to the submission of the bid; or

(B) is commonly referred to as a hybrid vehicle that is capable of being powered by a combination of any fuel and an alternative power source and the alternative power source includes an energy storage system to store generated or accumulated energy which substantially reduces the fuel use and emissions when compared to a standard vehicle of the same age, type and size; or

(C) is fueled by a biodiesel blend; provided that the vehicle is powered by the biodiesel blend for no less than 80% of the gallons consumed during the three months prior to the submission of the bid; or

(D) is fueled by traditional petroleum-based gasoline or petroleum-based diesel fuel, but powered by an engine substantially more efficiently designed than a standard vehicle of the same age, type and size; provided that the vehicle is rated by the United States Environmental Protection Agency in the top 5% for fuel efficiency for similar vehicles.

An "alternatively powered vehicle" does not include any vehicle which is: (i) primarily used in a warehouse or similar type of enclosed structure; (ii) required to use, or given credit for using, alternative fuel by any federal, state or local law; or (iii) subject to Section 2-92-595 of the MCC.

"Bid incentive" means an amount deducted, for bid evaluation purposes only, from the contract base bid in order to calculate the bid price to be used to evaluate the bid on a competitively bid contract.

"Biodiesel blend" has the meaning ascribed to that term in Section 2-92-595 of the MCC.

"Construction project" has the meaning ascribed to that term in Section 2-92-335 of the MCC.

"Contract" means any contract, purchase order, construction project, or other agreement (other than a delegate agency contract or lease of real property or collective bargaining agreement) awarded by the city and whose cost is to be paid from funds belonging to or administered by the city.

"Contract base bid" means the total dollar amount a contractor bids on a contract without factoring any bid incentive or percentage reductions in the bid amount.

"Eligible business" means a business located within the counties of Cook, DuPage, Kane, Lake, McHenry or Will in the State of Illinois (the “Six County Region”), and as to which: (1) a majority of the business' fleet is located and used within the Six County Region; and (2) a majority of those vehicles located and used within the Six County Region are alternatively powered vehicles.

"Fleet" means 10 or more vehicles that are owned, operated, leased or otherwise controlled by a business.

"Vehicle" means every device powered by a motor or engine and by, upon, or in which any person or property is or may be transported or drawn upon a street or highway, except a "vehicle" shall not include motorized wheelchairs, golf carts, neighborhood electric vehicles, as that term is defined in Section 9-4-010 of the MCC, devices moved solely by human power, devices used exclusively upon stationary rails or tracks, or snowmobiles, as defined in the Snowmobile Registration and Safety Act of Illinois.

1.22.3.2. Eligibility for Alternatively Powered Vehicles Bid Incentive

(A) Unless otherwise prohibited by any federal, state or local law, for any contract having an estimated contract value of $100,000 or more advertised, or if not advertised awarded, the chief procurement officer may allocate a bid incentive of 1/2% of the contract base price to a qualified bidder when the qualified bidder is an eligible business. If the CPO has determined that an Alternatively Powered Vehicles Preference may be applied, it will be indicated on the cover page of the Bid Documents.

The bid incentive is used only to calculate an amount to be used in evaluating the bid to determine the low bidder, and it does not affect the contract price.

For purposes of this section the total dollar value of a construction project contract includes both materials and labor.

(B) As a condition of being awarded the bid incentive, the eligible business shall continue to meet the definition of an eligible business during the term of the contract.

(C) The contractor shall maintain adequate records necessary to monitor compliance with this section and shall submit such reports as required by the chief procurement officer. Full access to the contractor's and subcontractors' records shall be granted to the chief procurement officer, the commissioner of the supervising department, the inspector general, or any duly authorized representative thereof. The contractor and subcontractors shall maintain all relevant records for a period of no less than seven years after final acceptance of the work.

(D) A bidder desiring to receive an incentive pursuant to this section shall include with its bid submission the *Affidavit of Eligible Business for Bid Incentive for Alternative Powered Vehicles*, which affirms that the bidder satisfies all pertinent requirements as an eligible business.

(E) Upon completion of the work, any eligible business that receives a bid preference but that fails to meet the definition as an eligible business during the term of the contract shall be fined in an amount equal to three times the amount of the bid incentive awarded.

(F) This section shall not apply to any contract to the extent that the requirements imposed by this section are inconsistent with procedures or standards required by any law or regulation of the United States or the State of Illinois to the extent such inconsistency is not permitted under law or the home rule powers of the city.

1.22.4. Joint Ventures Between Small Business Enterprises and Veteran-Owned Business Enterprises

For purposes of this section only, the following definitions shall apply:

"Bid incentive" means an amount deducted, for bid evaluation purposes only, from the contract base bid in order to calculate the bid price to be used to evaluate the bid on a competitively bid contract.

"Contract base bid" means the total dollar amount a contractor bids on a contract without factoring any bid incentive or percentage reductions to the bid amount.

"Eligible joint venture" means an association of one or more small business enterprises in combination with one or more veteran-owned business enterprises, proposing to perform as a single for-profit business enterprise, in which each joint venture partner contributes property, capital, efforts, skill and

knowledge. Joint ventures must have an agreement in writing specifying the terms and conditions of the relationship between the partners and their respective roles in the contract.

"Owned" means, as MCC 2-92-670 may be updated from time to time, having all of the customary incidents of ownership, including the right of disposition, and sharing in all of the risks, responsibilities and profits commensurate with the degree of ownership.

"Small business enterprise" means, as MCC 2-92-670 may be updated from time to time, a small business as defined by the U.S. Small Business Administration, pursuant to the business size standards found in 13 C.F.R. Part 121, relevant to the scope(s) of work the firm seeks to perform on city contracts. A firm is not an eligible small business enterprise in any city fiscal year in which its gross receipts, averaged over the firm's previous five fiscal years, exceed the size standards of 13 C.F.R. Part 121.

"Veteran-owned business enterprise" means an enterprise which: (1) is at least 51 percent owned by one or more veterans, or in the case of a publicly held corporation, at least 51 percent of all classes of the stock of which is owned by one or more veterans, whose management, policies, major decisions and daily business operations are independently managed and controlled by one or more veterans; or (2) has been certified by the State of Illinois as a qualified service-disabled veteran-owned small business or a qualified veteran-owned small business pursuant to 30 ILCS 500/45-57.

"Veteran" means a person who has served in the United States armed forces and was discharged or separated under honorable conditions.

Unless otherwise prohibited by any federal, state or local law, the CPO shall allocate a bid incentive of 5% of the contract base price, in accordance with section 2-92-418 of the MCC, to any qualified bidder that is an eligible joint venture.

Bidders desiring to receive this incentive must submit an affidavit and other supporting documents demonstrating that the bidder satisfies all pertinent requirements as an eligible joint venture.

As a condition of being awarded the bid incentive, the eligible joint venture shall continue to meet the definition of an eligible joint venture. If a contract is awarded to the eligible joint venture, upon completion of the work, any eligible joint venture that receives a bid preference but fails to meet the definition of eligible joint venture during the term of the contract for which the bid incentive was awarded shall be fined in an amount equal to three times the amount of the bid incentive awarded.

The contractor shall maintain adequate records necessary to ensure compliance with this section and shall submit such reports as required by the chief procurement officer. Full access to the contractor's and subcontractors' records shall be granted to the chief procurement officer, the commissioner of the supervising department, the inspector general, or any duly authorized representative thereof. The contractor and subcontractor shall maintain all relevant records a period that is the longer of seven years or as after final acceptance of the work in accordance with the Local Records Act.

1.22.5. Child Support Arrearage

Pursuant to Section 2-92-415 of the MCC, an eight percent (8%) penalty will be applied to the Bids of Bidders whose substantial owners, as defined in the Code, are in arrears on court-ordered child support payments and who have not entered into an agreement for payment or are otherwise not in compliance with the order. The penalty will pertain to the Bid only, and will not affect the contract price or payments under the Contract. This penalty does not apply to federally-funded contracts.

1.22.6. MacBride Principles Ordinance

If the Bidder conducts any business operations in Northern Ireland, it is hereby required that the Bidder will make reasonable and good faith efforts to conduct those operations in accordance with the MacBride Principles for Northern Ireland as defined in Illinois Public Act 85-1390 and Section 2-92-580 of the Municipal Code to promote fair and equal employment opportunities and labor practices for religious minorities in Northern Ireland.

Bidders who take exception to the provision set forth above will be assessed an eight percent (8%) penalty on their Bids. The penalty will pertain to the Bid only, and will not affect the contract price or payments under the Contract.

1.23. Consideration of Bids

The CPO represents and acts for the City in all matters pertaining to this invitation for bids and any contract subsequently awarded. The CPO reserves the right to reject any and all bids and to disregard any informalities in a bid or the bidding process, when in his/her opinion the best interest of the City will be served by such action.

1.24. Bid Protests

The bidder shall submit any protests or claims regarding this solicitation to the office of the City's Chief Procurement Officer located at City Hall Room 806, 121 North LaSalle Street, Chicago, Illinois 60602. A pre-bid protest must be filed no later than the five calendar days before the bid opening date, a pre-award protest must be filed no later than ten calendar days after the bid opening date, and a post-award protest must be filed no later than ten calendar days after the award of the contract.

All protests or claims must set forth the name and address of the protester, the specification number, the grounds for the protest or claim, and the course of action that the protesting party desires that the CPO undertake.

Copies of the Bid Protest Procedures (entitled Department of Procurement Services Solicitations and Contracting Process Protest Procedures) are available at the Bid & Bond Room and on DPS' website www.cityofchicago.org/procurement under "Rules, Regulations and Ordinances" then under "Contract Rules and Regulations."

1.25. Award of Contract; Notice of Award

The Contract consists of the Bid Documents. Upon the award and execution of a contract pursuant to the Bid Documents, the Bid Documents become the Contract Documents, which collectively comprise the Contract.

The Department of Procurement Services will, by written notice, notify the Bidder that is, per the Basis of Award, the lowest responsive and responsible Bidder of the City's award of a Contract.

1.26. Title VI Solicitation Notice

The City, in accordance with the provisions of Title VI of the Civil Rights Act of 1964 (78 Stat. 252, 42 U.S.C. §§ 2000d to 2000d-4) and the Regulations, hereby notifies all bidders that it will affirmatively ensure that any contract entered into pursuant to this advertisement, disadvantaged business enterprises will be afforded full and fair opportunity to submit bids in response to this invitation and will not be discriminated against on the grounds of race, color, or national origin in consideration for an award.

ARTICLE 2. INCORPORATION OF EXHIBITS

The following attached Exhibits are made a part of this agreement:

- Exhibit 1: Example Insurance Certificate of Coverage
- Exhibit 2: Detailed specifications for Helix Foundation Poles #1526 and Helix Foundation Cable Anti-Theft Device #1593
- Exhibit 3: Drawings for Helix Foundation Poles #936 and Helix Foundation Cable Anti-Theft Devices #982

ARTICLE 3. STANDARD TERMS AND CONDITIONS

3.1. General Provisions

3.1.1. Definitions

"Addendum" is an official revision of the Bid Documents issued by the Chief Procurement Office prior to Bid Opening Date.

"Airports" means Chicago O'Hare International Airport and Chicago Midway International Airport.

"Airside" means, generally, those areas of an Airport which requires a person to pass through a security checkpoint to access. References to "sterile areas" generally mean Airside areas within terminal buildings. References to "Airfield", "Aircraft Operations Area", "AOA", or **"Secured areas"** generally mean outdoor Airside areas or areas not accessible to passengers.

"Attachments" are all the exhibits and other documents attached to the Bid Documents and/or incorporated into the Contract by reference.

"Bid" refers to an offer made by a Bidder in response to an invitation for bids which includes a binding proposal to perform the Contract which the City may rely on and accept, or in the case of an RFP or RFQ, the submission/proposal in response to that solicitation which may be subject to negotiation.

"Bidder" is a person, firm, or entity submitting a Bid in response to an invitation for bids; for RFPs and RFQs, references may be made to "Respondents." Once the Contract is awarded the Contractor shall assume that all references to a Bidder or Respondent and such attendant obligations apply to the Contractor.

"Bid Opening Date" is the date and time publicly advertised by the Chief Procurement Officer as the deadline for submission of Bids; this may be referred to as a "Proposal Due Date" for RFP and RFQ solicitations.

"Bid Documents" means all the documents issued by the Chief Procurement Officer, or referenced by the Chief Procurement Officer as being available on the City's website and incorporated by such reference, in connection with an invitation for bids or proposals. Except for such Bid Documents as are posted on the City's website and incorporated by reference, all Bid Documents must be submitted by a bidder on the Bid Opening Date.

"Business Day" means business days (Monday through Friday, excluding legal holidays, or City shut-down days) in accordance with the City of Chicago business calendar.

"Calendar Day" means all calendar days in accordance with the world-wide accepted calendar.

"Chief Procurement Officer" abbreviated as "CPO" means the chief executive of the City's Department of Procurement Services ("DPS"), and any representative duly authorized in writing to act on the Chief Procurement Officer's behalf.

"**City"** means the City of Chicago, a municipal corporation and home rule government under Sections 1 and 6(a), Article VII, of the 1970 Constitution of the State of Illinois.

"Commissioner" means the chief executive of any City department that participates in this Contract (regardless of the actual title of such chief executive), and any representative duly authorized in writing to act on the Commissioner's behalf with respect to this Contract.

"Contact Person" means the Contractor's management level personnel who will work as liaison between the City and the Contractor and be available to respond to any problems that may arise in connection with Contractor's performance under the Contract.

"Contract" means, upon notice of award from the CPO, the contract consisting of all Bid Documents relating to a specific invitation for bids or proposals, and all amendments, modifications, or revisions made from time to time in accordance with the terms thereof. All such documents comprising the Contract are referred to as the "Contract Documents".

"Contractor" means the Bidder or Proposer (person, firm, or entity) that is awarded the Contract by the CPO. Any references to the Bidder or Proposer in the Contract Documents is understood to apply to the Contractor.

"Department" which may also be referred to as the using/user Department is the City Department which appears on the applicable Purchase Order Release for goods, work, or services provided under this Contract.

"Detailed Specifications" refers to the contract specific requirements that includes but is not limited to a detailed description of the scope, term, compensation, price escalation, and such other additional terms and conditions governing this specific Contract.

"Force Majeure Event" means an event beyond the reasonable control of a party to this Contract, which is limited to acts of God, explosion, acts of the public enemy, fires, floods, earthquakes, tornadoes, epidemics, quarantine restrictions, work stoppages not caused or unmitigated by the Contractor.

"Holidays" refers to the official City Holidays when the City is generally closed for business which includes: New Year's Day, Dr. Martin Luther King Jr.'s Birthday, Lincoln's Birthday, President's Day, Pulaski Day, Memorial Day, Independence Day, Labor Day, Columbus Day, Veteran's Day, Thanksgiving Day, and Christmas Day.

"MCC" is the abbreviation for the Municipal Code of Chicago.

"Party" or collectively "Parties" refers to the entities that have entered into this Contract including the Contractor and the City.

"Purchase Order" means a written purchase order from a Department referencing this Contract. Purchase Orders may also be referred to as "Blanket Releases".

"Services" refers to all work, services, and materials whether ancillary or as required by the Detailed Specifications that Contractor provides in performance of its obligations under this Contract.

"Specification" means the Bid Documents, including but not limited to the Detailed Specifications.

"Subcontractor" means any person or entity with whom the Contractor contracts to provide any part of the goods, services or work to be provided by Contractor under the Contract, including subcontractors of any tier, suppliers and material men, whether or not in privity with the Contractor.

3.1.2. Interpretation of Contract

3.1.2.1. Order of Precedence

The order of precedence of the component contract parts will be as follows:

- If funded by the Federal government or State of Illinois, terms required by the Federal Government or State of Illinois, as applicable, whether set out in this document, in a Task Order Request (if applicable), or otherwise.
- Standard provisions and form provisions relating to this procurement type
- Scope of Work and Detailed Specifications
- Task Order (if applicable)
- All other parts of this Contract.

3.1.2.2. Interpretation and Rules

Unless a contrary meaning is specifically noted elsewhere, the phrases "as required", "as directed", "as permitted", and similar words mean the requirements, directions, and permissions of the Commissioner or CPO, as applicable. Similarly, the words "approved", "acceptable", "satisfactory", and similar words mean approved by, acceptable to, or satisfactory to the Commissioner or the CPO, as applicable.

The words "necessary", "proper", or similar words used with respect to the nature or extent of work or services mean that work or those services must be conducted in a manner, or be of a character which is necessary or proper for the type of work or services being provided in the opinion of the

Commissioner and the CPO, as applicable. The judgment of the Commissioner and the CPO in such matters will be considered final.

Wherever the imperative form of address is used, such as "provide equipment required" it will be understood and agreed that such address is directed to the Contractor unless the provision expressly states that the City will be responsible for the action.

3.1.2.3. Severability
The invalidity, illegality, or unenforceability of any one or more phrases, sentences, clauses, or sections in this Contract does not affect the remaining portions of this Contract.

3.1.2.4. Entire Contract
The Contract Documents constitute the entire agreement between the parties and may not be modified except by the subsequent written agreement of the parties.

3.1.3. Subcontracting and Assignment

3.1.3.1. No Assignment of Contract
Pursuant to 65 ILCS 8-10-14, Contractor may not assign this Contract without the prior written consent of the CPO. In no case will such consent relieve the Contractor from its obligations, or change the terms of the Contract. The Contractor must notify the CPO, in writing, of the name of any proposed assignee and the reason for the assignment; consent to which is solely in the CPO's discretion.

3.1.3.2. Subcontracts
No part of the goods, work, or services to be provided under this Contract may be subcontracted without the prior written consent of the CPO; but in no case will such consent relieve the Contractor from its obligations, or change the terms of the Contract. The Contractor must notify the CPO of the names of all Subcontractors to be used and shall not employ any that the CPO has not approved. Prior to proposing the use of a certain Subcontractor, the Contractor must verify that neither the Subcontractor nor any of its owners is debarred from or otherwise ineligible to participate on City contracts. This information can be found on the City's website:
http://www.cityofchicago.org/city/en/depts/dps/provdrs/comp/svcs/debarred_firms_list.html

Subcontracting of the services or work or any portion of the Contract without the prior written consent of the CPO is null and void. Further, the Contractor will not make any substitution of a previously approved Subcontractor without the prior written consent of the CPO; any substitution of a Subcontractor without the prior written consent of the CPO is null and void.

The Contractor will only subcontract with competent and responsible Subcontractors. If, in the judgment of the Commissioner or the CPO, any Subcontractor is careless, incompetent, violates safety or security rules, obstructs the progress of the services or work, acts contrary to instructions, acts improperly, is not responsible, is unfit, is incompetent, violates any laws applicable to this Contract, or fails to follow the requirements of this Contract, then the Contractor will, immediately upon notice from the Commissioner or the CPO, discharge or otherwise remove such Subcontractor and propose an acceptable substitute for CPO approval.

3.1.3.3. No Pledging or Assignment of Contract Funds Without City Approval
The Contractor may not pledge, transfer, or assign any interest in this Contract or contract funds due or to become due without the prior written approval of the CPO. Any such attempted pledge, transfer, or assignment, without the prior written approval of the CPO is void as to the City and will be deemed an event of default under this Contract.

3.1.3.4. City's Right to Assign
The City expressly reserves the right to assign or otherwise transfer all or any part of its interests in this Contract without the consent or approval of the Contractor.

3.1.3.5. Assigns

All of the terms and conditions of this Contract are binding upon and inure to the benefit of the parties hereto and their respective legal representatives, successors, transferees, and assigns.

3.1.4. Contract Governance

3.1.4.1. Governing Law and Jurisdiction

This Contract will be governed in accordance with the laws of the State of Illinois, without regard to choice of law principles. The Contractor hereby irrevocably submits, and will cause its Subcontractors to submit, to the original jurisdiction of those State or Federal courts located within the County of Cook, State of Illinois, with regard to any controversy arising out of, relating to, or in any way concerning the execution or performance of this Contract and irrevocably agrees to be bound by any final judgment rendered thereby from which no appeal has been taken or is available. The Contractor irrevocably waives any objection (including without limitation any objection of the laying of venue or based on the grounds of forum non conveniens) which it may now or hereafter have to the bringing of any action or proceeding with respect to this Contract in the jurisdiction set forth above.

3.1.4.2. Consent to Service of Process

The Contractor agrees that service of process on the Contractor may be made, at the option of the City, either by registered or certified mail addressed to the applicable office as provided for in this Contract, by registered or certified mail addressed to the office actually maintained by the Contractor, or by personal delivery on any officer, director, or managing or general agent of the Contractor. The Contractor designates and appoints the representative identified on the signature page hereto under the heading "Designation of Agent for Service Process", as its agent in Chicago, Illinois, to receive on its behalf service of all process (which representative will be available to receive such service at all times), such service being hereby acknowledged by such representative to be effective and binding service in every respect. Said agent may be changed only upon the giving of written notice by the Contractor to the City of the name and address of a new Agent for Service of Process who works within the geographical boundaries of the City of Chicago. Nothing herein will affect the right to serve process in any other manner permitted by law or will limit the right of the City to bring proceedings against the Contractor in the courts of any other jurisdiction.

3.1.4.3. Cooperation by Parties and between Contractors

The Parties hereby agree to act in good faith and cooperate with each other in the performance of this Contract. The Contractor further agrees to implement such measures as may be necessary to ensure that its staff and its Subcontractors will be bound by the provisions of this Contract. The City will be expressly identified as a third party beneficiary in the subcontracts and granted a direct right of enforcement thereunder.

Unless otherwise provided in Detailed Specifications, if separate contracts are let for work within or adjacent to the project site as may be further detailed in the Contract Documents, each Contractor must perform its Services so as not to interfere with or hinder the progress of completion of the work being performed by other contractors.

Each Contractor involved shall assume all liability, financial or otherwise, in connection with its contract, and shall protect and hold harmless the City from any and all damages or claims that may arise because of inconvenience, delay, or loss experienced by the Contractor because of the presence and operations of other contractors working within the limits of its work or Services. Each Contractor shall assume all responsibility for all work not completed or accepted because of the presence and operations of other contractors.

The Contractor must as far as possible, arrange its work and space and dispose of the materials being used, so as not to interfere with the operations of the other contractors within or adjacent to the limits of the project site.

3.1.4.4. No Third Party Beneficiaries

The parties agree that this Contract is solely for the benefit of the parties and nothing herein is intended to create any third party beneficiary rights for subcontractors or other third parties.

3.1.4.5. Independent Contractor
This Contract is not intended to and does not constitute, create, give rise to, or otherwise recognize a joint venture, partnership, corporation or other formal business association or organization of any kind between Contractor and the City. The rights and the obligations of the parties are only those set forth in this Contract. Contractor must perform under this Contract as an independent contractor and not as a representative, employee, agent, or partner of the City.

This Contract is between the City and an independent contractor and, if Contractor is an individual, nothing provided for under this Contract constitutes or implies an employer-employee relationship such that:

The City will not be liable under or by reason of this Contract for the payment of any workers' compensation award or damages in connection with the Contractor performing the Services required under this Contract.

Contractor is not entitled to membership in any City Pension Fund, Group Medical Insurance Program, Group Dental Program, Group Vision Care, Group Life Insurance Program, Deferred Income Program, vacation, sick leave, extended sick leave, or any other benefits ordinarily provided to individuals employed and paid through the regular payrolls of the City.

The City is not required to deduct or withhold any taxes, FICA or other deductions from any compensation provided to Contractor.

3.1.4.6. Authority
Execution of this Contract by the Contractor is authorized and signature(s) of each person signing on behalf of the Contractor have been made with complete and full authority to commit the Contractor to all terms and conditions of this Contract, including each and every representation, certification, and warranty contained herein, attached hereto and collectively incorporated by reference herein, or as may be required by the terms and conditions hereof. If other than a sole proprietorship, Contractor must provide satisfactory evidence that the execution of the Contract is authorized in accordance with the business entity(s rules and procedures.

3.1.4.7. Joint and Several Liability
In the event that Contractor, or its successors or assigns, if any, is comprised of more than one individual or other legal entity (or a combination thereof), then and in that event, each and every obligation or undertaking herein stated to be fulfilled or performed by Contractor will be the joint and several obligation or undertaking of each such individual or other legal entity.

3.1.4.8. Notices
All communications and notices to the City from the Contractor must be faxed, delivered personally, electronically mailed or mailed first class, postage prepaid, to the Commissioner of the using Department that appears on the applicable Purchase Order, with a copy to the Chief Procurement Officer, Room 806, City Hall, 121 N. LaSalle Street, Chicago, Illinois 60602.

A copy of any communications or notices to the City relating to Contract interpretation, a dispute, or indemnification obligations shall also be sent by the same means set forth above to the Department of Law, Room 600, City Hall, 121 N LaSalle Street, Chicago, Illinois 60602.

All communications and notices from the City to the Contractor, unless otherwise provided for, will be faxed, delivered personally, electronically mailed or mailed first class, postage prepaid, to the Contractor care of the name and to the address listed on the Bid Documents' proposal page. If this contract was awarded through a process that does not use bid or proposal documents, notices to contractor will be sent to an address specified in the Contract.

3.1.4.9. Amendments

Following Contract award, no change, amendment, or modification of the Contract Documents or any part thereof, is valid unless stipulated in writing and signed by the Contractor, Mayor, CPO, and Comptroller, unless specifically allowed for by the Contract Documents.

3.1.4.10. No Waiver of Legal Rights

Neither the acceptance by the City, or any representative of the City, nor any payment for or acceptance of the whole or any part of the deliverables, nor any extension of time, nor any possession taken by the City, shall operate as a waiver by the City of any portion of the Contract, or of any power herein reserved or any right of the City to damages herein provided.

A waiver of any breach of the Contract shall not be held to be a waiver of any other or subsequent breach. Whenever under this Contract the City by a proper authority waives the Contractor's performance in any respect or waives a requirement or condition to either the City's or the Contractor's performance, the waiver so granted, whether express or implied, shall only apply to the particular instance and will not be deemed a waiver forever or for subsequent instance of the performance, requirement, or condition. No such waiver shall be construed as a modification of this Contract regardless of the number of time the City may have waived the performance, requirement, or condition.

3.1.4.11. Non-appropriation of Funds

Pursuant to 65 ILCS 5/8-1-7, any contract for the expenditure of funds made by a municipality without the proper appropriation is null and void.

If no funds or insufficient funds are appropriated and budgeted in any fiscal period of the City for payments to be made under this Contract, then the City will notify the Contractor of that occurrence and this Contract shall terminate on the earlier of the last day of the fiscal period for which sufficient appropriation was made or whenever the funds appropriated for payment under this Contract are exhausted.

No payments will be made to the Contractor under this Contract beyond those amounts appropriated and budgeted by the City to fund payments under this Contract.

3.1.4.12. Participation By Other Government Agencies

Other Local Government Agencies (defined below) may be eligible to participate in this Contract if (a) such agencies are authorized, by law or their governing bodies, to execute such purchases, (b) such authorization is consented to by the City of Chicago's CPO, and (c) such purchases have no net adverse effect on the City of Chicago and result in no diminished services from the Contractor to the City's Departments.

Examples of such Local Government Agencies are: the Chicago Board of Education, Chicago Park District, City Colleges of Chicago, Chicago Transit Authority, Chicago Housing Authority, Chicago Board of Elections, Metropolitan Pier and Exposition Authority (McCormick Place, Navy Pier), and the Municipal Courts.

Said purchases will be made upon the issuance of a purchase order directly from the Local Government Agency. The City will not be responsible for payment of any amounts owed by any other Local Government Agencies, and will have no liability for the acts or omissions of any other Local Government Agency.

3.1.5. Confidentiality

All deliverables and reports, data, findings or information in any form prepared, assembled or encountered by or provided by Contractor under this Contract are property of the City and are confidential, except as specifically authorized in this Contract or as may be required by law. Contractor must not allow the Deliverables to be made available to any other individual or organization without the prior written consent of the City. Further, all documents and other information provided to Contractor by the City are confidential and must not be made available to any other individual or organization without the prior written consent of the City. Contractor must implement such measures as may be

necessary to ensure that its staff and its Subcontractors are bound by the confidentiality provisions contained in this Contract.

Contractor must not issue any publicity news releases or grant press interviews, and except as may be required by law during or after the performance of this Contract, disseminate any information regarding its Services or the project to which the Services pertain without the prior written consent of the Commissioner.

If Contractor is presented with a request for documents by any administrative agency or with a subpoena duces tecum regarding any records, data or documents which may be in Contractor's possession by reason of this Contract, Contractor must immediately give notice to the Commissioner, CPO and the Corporation Counsel for the City with the understanding that the City will have the opportunity to contest such process by any means available to it before the records or documents are submitted to a court or other third party. Contractor, however, is not obligated to withhold the delivery beyond the time ordered by the court or administrative agency, unless the subpoena or request is quashed or the time to produce is otherwise extended.

3.1.6. Indemnity

Contractor must defend, indemnify, keep and hold harmless the City, its officers, representatives, elected and appointed officials, agents and employees (collectively, the "Indemnified Parties,") from and against any and all Losses (as defined below), in consequence of the granting of this Contract or arising out of or being in any way connected with the Contractor's performance under this Contract, except as otherwise provided in 740 ILCS 35 "Construction Contract Indemnification for Negligence Act" if it applies, including those related to: injury, death or damage of or to any person or property; any infringement or violation of any property right (including any patent, trademark or copyright); failure to pay or perform or cause to be paid or performed Contractors covenants and obligations as and when required under this Contract or otherwise to pay or perform its obligations to any subcontractor; the City's exercise of its rights and remedies under this Contract; and injuries to or death of any employee of Contractor or any subcontractor under any workers compensation statute. When 740 ILCS 35 applies, indemnification provided by the Contractor to the Indemnified Parties will be to the maximum extent permitted under applicable law.

"Losses" means, individually and collectively, liabilities of every kind, including monetary damages and reasonable costs, payments and expenses (such as, but not limited to, court costs and reasonable attorneys' fees and disbursements), claims, demands, actions, suits, proceedings, fines, judgments or settlements, any or all of which in any way arise out of or relate to the negligent or otherwise wrongful errors, acts, or omissions of Contractor, its employees, agents and subcontractors.

The Contractor will promptly provide, or cause to be provided, to the Commissioner and the Corporation Counsel copies of such notices as Contractor may receive of any claims, actions, or suits as may be given or filed in connection with the Contractor's performance or the performance of any Subcontractor and for which the Indemnified Parties are entitled to indemnification hereunder.

At the City Corporation Counsel's option, Contractor must defend all suits brought upon all such Losses and must pay all costs and expenses incidental to them, but the City has the right, at its option, to participate, at its own cost, in the defense of any suit, without relieving Contractor of any of its obligations under this Contract. Any settlement must be made only with the prior written consent of the City Corporation Counsel, if the settlement requires any action on the part of the City.

The Contractor shall be solely responsible for the defense of any and all claims, demands, or suits against the Indemnified Parties, including without limitation, claims by an employee, subcontractors, agents, or servants of Contractor even though the claimant may allege that the Indemnified Parties were in charge of the work or service performed under the Contract, that it involves equipment owned or furnished by the Indemnified Parties, or allege negligence on the part of the Indemnified Parties. The City will have the right to require Contractor to provide the City with a separate defense of any such suit.

To the extent permissible by law, Contractor waives any limits to the amount of its obligations to indemnify, defend or contribute to any sums due to third parties arising out of any Losses, including but not limited to any limitations on Contractor's liability with respect to a claim by any employee of Contractor arising under the Workers Compensation Act, 820 ILCS 305/1 *et seq*. or any other related law or judicial decision (such as, *Kotecki v. Cyclops Welding Corporation*, 146 III. 2d 155 (1991)). The City, however, does not waive any limitations it may have on its liability under the Illinois Workers Compensation Act, the Illinois Pension Code or any other statute.

The indemnities in this section survive expiration or termination of this Contract for matters occurring or arising during the term of this Contract or as the result of or during the Contractor's performance of work or services beyond the term. Contractor acknowledges that the requirements set forth in this section to indemnify, keep and save harmless and defend the City are apart from and not limited by the Contractor's duties under this Contract, including the insurance requirements set forth in the Contract.

3.1.7. Non-Liability of Public Officials
Contractor and any assignee or Subcontractor of Contractor must not charge any official, employee or agent of the City personally with any liability or expenses of defense or hold any official, employee or agent of the City personally liable to them under any term or provision of this Contract or because of the City's execution, attempted execution or any breach of this Contract.

3.1.8. Contract Extension Option
The City may extend this Contract once following the expiration of the contract term for up to 181 Calendar Days or until such time as a new contract has been awarded for the purpose of providing continuity of services and/or supply while procuring a replacement contract subject to acceptable performance by the Contractor and contingent upon the appropriation of sufficient funds. The CPO will give the Contractor notice of the City's intent to exercise its option to renew the Contract for the approaching option period.

3.2. Compensation Provisions

3.2.1. Ordering, Invoices, and Payment

3.2.1.1. Purchase Orders
Requests for work, services or goods in the form of a Purchase Order will be issued by the Department and sent to the Contractor to be applied against the Contract. The Contactor must not honor any order(s), perform work or services or make any deliveries of goods without receipt of a Purchase Order issued by the City of Chicago. Any work, services, or goods provided by the Contractor without a Purchase Order is made at the Contractor's risk. Consequently, in the event such Purchase Order is not provided by the City, the Contractor releases the City from any liability whatsoever to pay for any work, services, or goods provided without said Purchase Order.

Purchase Orders will indicate quantities ordered for each line item, unit/total cost, shipping address, delivery date, fund chargeable information, catalog information (if applicable), and other pertinent instructions regarding performance or delivery.

3.2.1.2. Invoices
If required by the Scope of Work / Detailed Specifications, original invoices must be sent by the Contractor to the Department to apply against the Contract. Invoices must be submitted in accordance with the mutually agreed upon time period with the Department. All invoices must be signed, dated and reference the City's Purchase Order number and Contract number. A signed work ticket, time sheets, manufacturer's invoice, if applicable, or any documentation requested by the Commissioner must accompany each invoice. If a Contractor has more than one contract with the City, separate invoices must be prepared for each contract in lieu of combining items from different contracts under the same invoice. Invoice quantities, description of work, services or goods, unit of measure, pricing and/or catalog information must correspond to the items on the accepted Price List or Proposal Pages or of the Bid Documents. If invoicing Price List/Catalog items, indicate Price List/Catalog number, item number, Price List/Catalog date and Price List/Catalog page number on the invoice.

3.2.1.3. Payment

The City will process payment within sixty (60) calendar days after receipt of invoices and all supporting documentation necessary for the City to verify the satisfactory delivery of work, services or goods to be provided under this Contract.

Contractor may be paid, at the City's option, by electronic payment method. If the City elects to make payment through this method, it will so notify the Contractor, and Contractor agrees to cooperate to facilitate such payments by executing the City's electronic funds transfer form, available for download from the City's website at: http://www.cityofchicago.org/content/dam/city/depts/fin/supp_info/DirectDepositCityVendor.pdf. The City reserves the right to offset mistaken or wrong payments against future payments.

The City will not be obligated to pay for any work, services or goods that were not ordered with a Purchase Order or that are non-compliant with the terms and conditions of the Contract Documents. Any goods, work, or services which fail tests and/or inspections are subject to correction, exchange or replacement at the cost of the Contractor.

3.2.1.4. Electronic Ordering and Invoices

The Contractor will cooperate in good faith with the City in implementing electronic ordering and invoicing, including but not limited to price lists/catalogs, purchase orders, releases and invoices. The electronic ordering and invoice documents will be in a format specified by the City and transmitted by an electronic means specified by the City. Such electronic means may include, but are not limited to, disks, e-mail, EDI, FTP, web sites, and third party electronic services. The CPO reserves the right to change the document format and/or the means of transmission upon written notice to the Contractor. Contractor will ensure that the essential information, as determined by the CPO, in the electronic document, corresponds to that information submitted by the Contractor in its paper documents. The electronic documents will be in addition to paper documents required by this Contract, however, by written notice to the Contractor, the CPO may deem any or all of the electronic ordering and invoice documents the official documents and/or eliminate the requirement for paper ordering and invoice documents.

3.2.1.5. City Right to Offset

The City may offset against any invoice from Contractor any costs incurred by the City as a result of event of default by Contractor under this Contract or otherwise resulting from Contractor's performance or non-performance under this Contract, including but not limited to any credits due as a result of over-billing by Contractor or overpayments made by the City. If the amount offset is insufficient to cover those costs, Contractor is liable for and must promptly remit to the City the balance upon written demand for it. This right to offset is in addition to and not a limitation of any other remedies available to the City.

3.2.1.6. Records

Upon request the Contractor must furnish to the City such information related to the progress, execution, and cost of the Services. All books and accounts in connection with this Contract must be open to inspection by authorized representatives of the City. The Contractor must make these records available at reasonable times during the performance of the Services and will retain them in a safe place and must retain them for a period that is the longer of five (5) years or as required by relevant retention schedules after the expiration or termination of the Contract.

3.2.1.7. Audits

3.2.1.7.1. City's Right to Conduct Audits

The City may, in its sole discretion, audit the records of Contractor or its Subcontractors, or both, at any time during the term of this Contract or within five years after the Contract ends, in connection with the goods, work, or services provided under this Contract. Each calendar year or partial calendar year may be deemed an "audited period".

3.2.1.7.2. Recovery for Over-Billing

If, as a result of such an audit, it is determined that Contractor or any of its Subcontractors has overcharged the City in the audited period, the City will notify Contractor. Contractor must then promptly reimburse the City for any amounts the City has paid Contractor due to the overcharges and, depending on the facts, also some or all of the cost of the audit, as follows:

If the audit has revealed overcharges to the City representing less than 5% of the total value, based on the contract prices, of the goods, work, or services provided in the audited period, then the Contractor must reimburse the City for 50% of the cost of the audit and 50% of the cost of each subsequent audit that the City conducts;

If, however, the audit has revealed overcharges to the City representing 5% or more of the total value, based on the contract prices, of the goods, work, or services provided in the audited period, then Contractor must reimburse the City for the full cost of the audit and of each subsequent audit.

Failure of Contractor to reimburse the City in accordance with the foregoing is an event of default under this Contract, and Contractor will be liable for all of the City's costs of collection, including any court costs and attorneys' fees.

3.2.2. Subcontractor Payment Reports

The Contractor must report payments to Subcontractors on a monthly basis in the form of an electronic report. Upon the first payment issued by the City to the Contractor for services performed, on the first day of each month and every month thereafter, email and/or fax notifications will be sent to the Contractor with instructions to report payments to Subcontractors that have been made in the prior month. This information must be entered into the Certification and Compliance Monitoring System (C2), or whatever reporting system is currently in place, on or before the fifteenth (15th) day of each month.

Once the Contractor has reported payments made to each Subcontractor, including zero dollar amount payments, the Subcontractor will receive an email and/or fax notification requesting that they log into the system and confirm payments received.

All monthly confirmations must be reported on or before the twentieth (20th) day of each month. Contractor and Subcontractor reporting to the C2 system must be completed by the 25th of each month or payments may be withheld.

All contracts between the Contractor and its Subcontractors must contain language requiring the Subcontractors to respond to email and/or fax notifications from the City requiring them to report payments received from the Contractor.

Access to the Certification and Compliance Monitoring System (C2), which is a web-based reporting system, can be found at: https://chicago.mwdbe.com

(Note: This site works for reporting all Subcontractor payments regardless of whether they are MBE/WBE/DBE or non-certified entities.)

If a Subcontractor has satisfactorily performed in accordance with the requirements of the Contract, Contractor must pay Subcontractor for such work, services, or materials within seven (7) calendar days of Contractor receiving payment from the City. Failure to comply with the foregoing will be deemed an event of default.

3.2.3. Prompt Payment to Subcontractors

3.2.3.1. Incorporation of Prompt Payment Language in Subcontracts

Contractor must state the requirements of these Prompt Payment provisions in all Subcontracts and purchase orders. If Contractor fails to incorporate these provisions in all Subcontracts and purchase orders, the provisions of this Section are deemed to be incorporated in all Subcontracts and purchase orders. Contractor and the Subcontractors have a continuing obligation to make prompt payment to their respective Subcontractors. Compliance with this obligation is a condition of Contractor's participation and that of its Subcontractors on this Contract.

3.2.3.2. Payment to Subcontractors Within Seven Days

The Contractor must make payment to its Subcontractors **within 7 days** of receipt of payment from the City for each invoice, but only if the Subcontractor has satisfactorily provided goods or services or completed its work or services in accordance with the Contract Documents and provided the Contractor with all of the documents and information required of the Contractor. The Contractor may delay or postpone payment for a to a Subcontractor when the Subcontractor's work or materials do not comply with the requirements of the Contract Documents, the Contractor is acting in good faith, and not in retaliation for a Subcontractor exercising legal or contractual rights.

3.2.3.2.1. Reporting Failures to Promptly Pay

The City posts payments to prime contractors on the web at http://webapps.cityofchicago.org/VCSearchWeb/org/cityofchicago/vcsearch/controller/payments/begin.do?agencyId=city.

If the Contractor, without reasonable cause, fails to make any payment to its Subcontractors and material suppliers **within 7 days** after receipt of payment under a City contract, the Contractor shall pay to its Subcontractors and material suppliers, in addition to the payment due them, interest in the amount of 2% per month, calculated from the expiration of the 7-day period until fully paid.

In the event that a Contractor fails to make payment to a Subcontractor within the 7-day period required above, the Subcontractor may notify the City by submitting a report form that may be downloaded from the DPS website at:

http://www.cityofchicago.org/content/dam/city/depts/dps/ContractAdministration/StandardFormsAgreements/Failure_to_Promtly_Pay_Fillable_Form_3_2013.pdf

The report will require the Subcontractor to affirm that (a) its invoice to the Contractor was included in the payment request submitted by the contractor to the City and (b) Subcontractor has not, at the time of the report, received payment from the contractor for that invoice. The report must reference the payment (voucher) number posted on-line by the City in the notice of the payment to the contractor.

Subcontractors are hereby reminded that per Chapters 1-21, "False Statements," and 1-22, "False Claims," of the Municipal Code of Chicago, making false statements or claims to the City are violations of law and subject to a range of penalties including fines and debarment.

3.2.3.2.2. Whistleblower Protection

Contractor shall not take any retaliatory action against any Subcontractor for reporting non-payment pursuant to this Sub-Section 0. Any such retaliatory action is an event of default under this Contract and is subject to the remedies set forth in Section 3.5 hereof, including termination. In addition to those remedies, any retaliatory action by a contractor may result in a contractor being deemed non-responsible for future City contracts or, if, in the sole judgment of the Chief Procurement Officer, such retaliatory action is egregious, the Chief Procurement Officer may initiate debarment proceedings against the contractor. Any such debarment shall be for a period of not less than one year.

3.2.3.3. Liquidated Damages for Failure to Promptly Pay

Much of the City's economic vitality derives from the success of its small businesses. The failure by contractors to pay their subcontractors in a timely manner, therefore, is clearly detrimental to the City. Inasmuch as the actual damages to the City due to such failure are uncertain in amount and difficult to prove, Contractor and City agree that the Chief Procurement Officer may assess liquidated damages against contractors who fail to meet their prompt payment requirements. Such liquidated damages shall be assessed to compensate the City for any and all damage incurred due to the failure of the Contractor to promptly pay its subcontractors, and does not constitute a penalty. Any and all such liquidated damages collected by the City shall be used to improve the administration and outreach efforts of the City's Small Business Program.

3.2.3.4. Action by the City

Upon receipt of a report of a failure to pay, the City will issue notice to the contractor, and provide the contractor with an opportunity to demonstrate reasonable cause for failing to make payment within applicable period set forth in the Contract. The Chief Procurement Officer, in his or her sole judgment, shall determine whether any cause for nonpayment provided by a contractor is reasonable. In the event that the contractor fails to demonstrate reasonable cause for failure to make payment, the City shall notify the contractor that it will assess liquidated damages. Any such liquidated damages will be assessed according to the following schedule:

First Unexcused Report:	$50
Second Unexcused Report:	$100
Third Unexcused Report:	$250
Fourth Unexcused Report:	$500

3.2.3.5. Direct Payment to Subcontractors By City

The CPO may notify the Contractor that payments to the Contractor will be suspended if the CPO has determined that the Contractor has failed to pay any Subcontractor, employee, or workman, for work performed. If Contractor has not cured a failure to pay a Subcontractor, employee or workman within 10 days after receipt of such notice, the CPO may request the Comptroller to apply any money due, or that may become due, to Contractor under the Contract to the payment of such Subcontractors, workmen, and employees and the effect will be the same, for purposes of payment to Contractor of the Contract Price, as if the City had paid Contractor directly.

Further, if such action is otherwise in the City's best interests, the CPO may (but is not obligated to) request that the Comptroller make direct payments to Subcontractors for monies earned on contracts and the effect will be the same, for purposes of payment to Contractor of the Contract Price, as if the City had paid Contractor directly. The City's election to exercise or not to exercise its rights under this paragraph shall not in any way affect the liability of the Contractor or its sureties to the City or to any such Subcontractor, workman, or employee upon any bond given in connection with such Contract.

3.2.4. General Price Reduction – Automatic Eligibility for General Price Reductions

If at any time after the Bid Opening Date the Contractor makes a general reduction in the price of any goods, services or work covered by the Contract to its customers generally, an equivalent price reduction based on similar quantities and/or considerations shall apply to the Contract for the duration of the contract period (or until the price is further reduced). Such price reduction will be effective at the same time and in the same manner as the reduction in the price to customers generally.

For purpose of this provision, a general price reduction will mean any reduction in the price of an article or service offered (1) to Contractor's customers generally, or (2) in the Contractor's price schedule for the class of customers, i.e., wholesalers, jobbers, retailers, etc., which was used as the basis for bidding on this Contract. An occasional sale at a lower price, or sale of distressed merchandise at a lower price, would not be considered a general price reduction under this provision.

The Contractor must invoice at such reduced prices indicating on the invoice that the reduction is pursuant to the General Price Reduction provision of the Contract. The Contractor, in addition, must within 10 calendar days of any general price reduction notify the CPO of such reduction by letter. Failure to do so will be an event of default. Upon receipt of any such notice of a general price reduction all participating Departments will be duly notified by the CPO.

Failure to notify the CPO of a General Price Reduction is an event of default, and the City's remedies shall include a rebate to the City of any overpayments.

3.3. Compliance With All Laws

3.3.1. General

Contractor must observe and comply with all applicable federal, state, county and municipal laws, statutes, regulations, codes, ordinances and executive orders, in effect now or later and as amended whether or not they appear in the Contract Documents.

Provisions required by law, ordinances, rules, regulations, or executive orders to be inserted in the Contract are deemed inserted in the Contract whether or not they appear in the Contract.

Contractor must pay all taxes and obtain all licenses, certificates, and other authorizations required in connection with the performance of its obligations hereunder, and Contractor must require all Subcontractors to also do so. Failure to do so is an event of default and may result in the termination of this Contract.

3.3.2. Certification of Compliance with Laws
By entering into this Contract with the City, Contractor certifies to the best of its knowledge and belief that it, its principals and any subcontractors used in the performance of this contract, meet City requirements and have not violated any City or sister agency policy, codes, state, federal, or local laws, rules or regulations and have not been subject to any debarment, suspension or other disciplinary action by any government agency. Additionally, if at any time the contractor becomes aware of such information, it must immediately disclose it to the City.

3.3.3. Federal Affirmative Action
It is an unlawful employment practice for the Contractor (1) to fail or refuse to hire or to discharge any individual, or otherwise to discriminate against any individual with respect to his compensation, or the terms, conditions, or privileges of his employment, because of such individuals race, color, religion, sex, age, handicap or national origin; or (2) to limit, segregate, or classify his employees or applicants for employment in any way which would deprive or tend to deprive any individual of employment opportunities or otherwise adversely affect his status as an employee, because of such individuals race, color, religion, sex, age, handicap or national origin.

Contractor must comply with The Civil Rights Act of 1964, 42 U.S.C. sec. 2000 et seq. (1988), as amended. Attention is called to: Exec. Order No. 11,246,30 Fed. Reg. 12,319 (1965), reprinted in 42 U.S.C. 2000(e) note, as amended by Exec. Order No. 11,375,32 Fed. Reg. 14,303 (1967) and by Exec. Order No. 12,086,43 Fed. Reg. 46,501 (1978); Age Discrimination Act, 42 U.S.C. sec. 61 01-61 06 (1988); Rehabilitation Act of 1973, 29 U.S.C. sec. 793-794 (1988); Americans with Disabilities Act, 42 U.S.C. sec. 12102 et seq.; and 41 C.F.R. Part 60 et seq. (1990); and all other applicable federal laws, rules, regulations and executive orders.

3.3.4. Civil Rights Act of 1964, Title VI, Compliance With Nondiscrimination Requirements
During the performance of this contract, the contractor, for itself, its assignees, and successors in interest (hereinafter referred to as the "contractor") agrees as follows:

3.3.4.1. Compliance with Federal Nondiscrimination Requirements
The contractor will comply with federal nondiscrimination laws, regulations, and authorities, as they may be amended from time to time ("Acts and Regulations"), which include:

- Title VI of the Civil Rights Act of 1964 (42 U.S.C. § 2000d et seq., 78 stat. 252), (prohibits discrimination on the basis of race, color, national origin);
- 49 CFR part 21 (Non-discrimination In Federally-Assisted Programs of The Department of Transportation—Effectuation of Title VI of The Civil Rights Act of 1964);
- Section 504 of the Rehabilitation Act of 1973, (29 U.S.C. § 794 et seq.), as amended, (prohibits discrimination on the basis of disability); and 49 CFR part 27;
- The Age Discrimination Act of 1975, as amended, (42 U.S.C. § 6101 et seq.), (prohibits discrimination on the basis of age);

- The Civil Rights Restoration Act of 1987, (PL 100-209), (Broadened the scope, coverage and applicability of Title VI of the Civil Rights Act of 1964, The Age Discrimination Act of 1975 and Section 504 of the Rehabilitation Act of 1973, by expanding the definition of the terms "programs or activities" to include all of the programs or activities of the Federal-aid recipients, sub-recipients and contractors, whether such programs or activities are Federally funded or not);
- Titles II and III of the Americans with Disabilities Act of 1990, which prohibit discrimination on the basis of disability in the operation of public entities, public and private transportation systems, places of public accommodation, and certain testing entities (42 U.S.C. §§ 12131 – 12189) as implemented by Department of Transportation regulations at 49 CFR parts 37 and 38;
- Executive Order 12898, Federal Actions to Address Environmental Justice in Minority Populations and Low-Income Populations, which ensures non-discrimination against minority populations by discouraging programs, policies, and activities with disproportionately high and adverse human health or environmental effects on minority and low-income populations;
- Executive Order 13166, Improving Access to Services for Persons with Limited English Proficiency, and resulting agency guidance, national origin discrimination under Title VI includes discrimination because of limited English proficiency (LEP). (70 Fed. Reg. at 74087 to 74100);
- Title IX of the Education Amendments of 1972, as amended, prohibits discrimination because of sex in education programs or activities (20 U.S.C. 1681 et seq);
- The Uniform Relocation Assistance and Real Property Acquisition Policies Act of 1970, (42 U.S.C. § 4601), (prohibits unfair treatment of persons displaced or whose property has been acquired because of Federal or Federal-aid programs and projects);
- Airport and Airway Improvement Act of 1982, (49 USC § 471, Section 47123), as amended, (prohibits discrimination based on race, religion, color, national origin, or sex in any activity carried out with a grant from the FAA).

3.3.4.2. Non-discrimination

The contractor, with regard to the work performed by it during the contract, will not discriminate on the grounds of race, color, or national origin in the selection and retention of subcontractors, including procurements of materials and leases of equipment. The contractor will not participate directly or indirectly in the discrimination prohibited by the Acts and the Regulations, including employment practices when the contract covers any activity, project, or program set forth in Appendix B of 49 CFR part 21 (Nondiscrimination in Federally-Assisted Programs of the US Department of Transportation).

3.3.4.3. Solicitations for Subcontracts, Including Procurements of Materials and Equipment

In all solicitations, either by competitive bidding, or negotiation made by the contractor for work to be performed under a subcontract, including procurements of materials, or leases of equipment, each potential subcontractor or supplier will be notified by the contractor of the contractor's obligations under this contract and the Acts and the Regulations relative to Non-discrimination on the grounds of race, color, or national origin.

3.3.4.4. Information and Reports

The contractor will provide all information and reports required by the Acts, the Regulations, and directives issued pursuant thereto and will permit access to its books, records, accounts, other sources of information, and its facilities as may be determined by the City or applicable federal agency (e.g. Federal Aviation Administration, Federal Highway Administration, Federal Transit Authority, Transportation Security Administration, Department of Housing and Urban Development,

etc.) providing funding to the City department(s) on this contract to be pertinent to ascertain compliance with such Acts, Regulations, and instructions. Where any information required of a contractor is in the exclusive possession of another who fails or refuses to furnish the information, the contractor will so certify to the sponsor or the federal agency, as appropriate, and will set forth what efforts it has made to obtain the information.

3.3.4.5. Sanctions for Noncompliance

In the event of a contractor's noncompliance with the Non-discrimination provisions of this contract, the City will impose such contract sanctions as it or the relevant federal funding agency may determine to be appropriate, including, but not limited to:

A. Withholding payments to the contractor under the contract until the contractor complies; and/or

B. Cancelling, terminating, or suspending a contract, in whole or in part.

3.3.4.6. Incorporation of Provisions

The contractor will include the provisions of above paragraphs 3.3.4.1, "Compliance With Regulations" through 3.3.4.6 "Incorporation of Provisions" in every subcontract, including procurements of materials and leases of equipment, unless exempt by the Acts, the Regulations and directives issued pursuant thereto. The contractor will take action with respect to any subcontract or procurement as the sponsor or the applicable federal agency may direct as a means of enforcing such provisions including sanctions for noncompliance. Provided, that if the contractor becomes involved in, or is threatened with litigation by a subcontractor, or supplier because of such direction, the contractor may request the sponsor to enter into any litigation to protect the interests of the sponsor. In addition, the contractor may request the United States to enter into the litigation to protect the interests of the United States.

3.3.5. Other Non-Discrimination Requirements

3.3.5.1. Illinois Human Rights Act

3.3.5.1.1. Generally

Contractor must comply with the Illinois Human Rights Act, 775 ILCS 5/1-1 01 et seq., as amended and any rules and regulations promulgated in accordance therewith, including, but not limited to the Equal Employment Opportunity Clause, 44 III. Admin. Code 750 Appendix A.

Contractor must comply with the Public Works Employment Discrimination Act, 775 ILCS 10/0.01 et seq., as amended; and all other applicable state laws, rules, regulations and executive orders.

3.3.5.1.2. State of Illinois Equal Employment Opportunity Clause

In the event of the Contractor's non-compliance with the provisions of this Equal Employment Opportunity Clause or the Illinois Human Rights Act, the Contractor may be declared ineligible for future contracts or subcontracts with the State of Illinois or any of its political subdivisions or municipal corporations, and the contract may be cancelled or voided in whole or in part, and other sanctions or penalties may be imposed or remedies invoked as provided by statute or regulation. During the performance of this contract, the Contractor agrees as follows:

A) That Contractor will not discriminate against any employee or applicant for employment because of race, color, religion, sex, sexual orientation, marital status, order of protection status, national origin or ancestry, citizenship status, age, physical or mental disability unrelated to ability, military status or an unfavorable discharge from military service; and, further, that he or she will examine all job classifications to determine if minority persons or women are underutilized and will take appropriate affirmative action to rectify any underutilization.

B) That, if Contractor hires additional employees in order to perform this contract or any portion of this contract, Contractor will determine the availability (in accordance with 44 III. Admin. Code Part 750) of minorities and women in the areas from which Contractor may reasonably recruit and Contractor will hire for each job classification for which employees are hired in a way that minorities and women are not underutilized.

C) That, in all solicitations or advertisements for employees placed Contractor or on Contractor's behalf, Contractor will state that all applicants will be afforded equal opportunity without discrimination because of race, color, religion, sex, sexual orientation, marital status, order of protection status, national origin or ancestry, citizenship status, age, physical or mental disability unrelated to ability, military status or an unfavorable discharge from military service.

D) That Contractor will send to each labor organization or representative of workers with which Contractor has or is bound by a collective bargaining or other agreement or understanding, a notice advising the labor organization or representative of the Contractor's obligations under the Illinois Human Rights Act and 44 III. Admin. Code Part 750. If any labor organization or representative fails or refuses to cooperate with the Contractor in Contractor's efforts to comply with the Act and this Part, the Contractor will promptly notify the Illinois Department of Human Rights and the City and will recruit employees from other sources when necessary to fulfill its obligations under the contract.

E) That Contractor will submit reports as required by 44 III. Admin. Code Part 750, furnish all relevant information as may from time to time be requested by the Illinois Department of Human Rights or the City, and in all respects comply with the Illinois Human Rights Act and 44 III. Admin. Code Part 750.

F) That Contractor will permit access to all relevant books, records, accounts and work sites by personnel of the City and the Illinois Department of Human Rights for purposes of investigation to ascertain compliance with the Illinois Human Rights Act and the Illinois Department of Human Rights's Rules and Regulations.

G) That Contractor will include verbatim or by reference the provisions of this clause in every subcontract awarded under which any portion of the contract obligations are undertaken or assumed, so that the provisions will be binding upon the subcontractor. In the same manner as with other provisions of this contract, the Contractor will be liable for compliance with applicable provisions of this clause by subcontractors; and further it will promptly notify the City and the Illinois Department of Human Rights in the event any subcontractor fails or refuses to comply with the provisions. In addition, the Contractor will not utilize any subcontractor declared by the Illinois Human Rights Commission to be ineligible for contracts or subcontracts with the State of Illinois or any of its political subdivisions or municipal corporations.

3.3.5.2. Chicago Human Rights Ordinance MCC Ch. 2-160

Contractor must comply with the Chicago Human Rights Ordinance, MCC Ch. 2-160, Sect. 2-160-010 et seq., as amended; and all other applicable municipal code provisions, rules, regulations and executive orders.

Contractor must furnish or shall cause each of its Subcontractors to furnish such reports and information as requested by the Chicago Commission on Human Relations.

3.3.5.3. Business Enterprises Owned by People With Disabilities (BEPD)

Pursuant to MCC 2-92-586, Contractor is strongly encouraged to subcontract with businesses certified as business enterprises owned or operated by people with disabilities ("BEPD") as defined in that section or MCC 2-92-337, and to use BEPD businesses as suppliers.

3.3.6. Wages

Contractor must pay the highest of (1) prevailing wage/Davis-Bacon rate, if applicable; (2) minimum wage specified by Mayoral Executive Order 2014-4; "Living Wage" rate specified by MCC Sect. 2-92-610; (3) Chicago Minimum Wage rate specified by MCC Chapter 1-24, or (4) the highest applicable State or Federal minimum wage.

3.3.6.1. Minimum Wage, Mayoral Executive Order 2014-1
Mayoral Executive Order 2014-1 provides for a fair and adequate Minimum Wage to be paid to employees of City contractors and subcontractors performing work on City contracts.

If this contract was advertised on or after October 1, 2014, Contractor must comply with Mayoral Executive Order 2014-1 and any applicable regulations issued by the CPO. The Minimum Wage to be paid pursuant to the Order as of July 1, 2016 is **$13.15 per hour**. The Minimum Wage must be paid to:

All employees regularly performing work on City property or at a City jobsite.

All employees whose regular work entails performing a service for the City under a City contract.

Beginning on July 1, 2015, and every July 1 thereafter, the hourly wage specified by the Executive Order shall increase in proportion to the increase, if any, in the Consumer Price Index for All Urban Consumers most recently published by the Bureau of Labor Statistics of the United States Department of Labor. Any hourly wage increase shall be rounded up to the nearest multiple of $0.05. Such increase shall remain in effect until any subsequent adjustment is made. On or before June 1, 2015, and on or before every June 1 thereafter, the City shall make available to City Concessionaires a bulletin announcing the adjusted minimum hourly wages for the upcoming year.

The Minimum Wage is not required to be paid to employees whose work is performed in general support of contractors operations, does not directly relate to the services provided to the City under the contract, and is included in the contract price as overhead, unless that employee's regularly assigned work location is on City property or at a City jobsite. It is also not required to be paid by employers that are 501(c)(3) not-for-profits.

Except as further described, the Minimum Wage is also not required to be paid to categories of employees subject to subsection 4(a)(2), subsection 4(a)(3), subsection 4(d), subsection 4(e), or Section 6 of the Illinois Minimum Wage Law, 820 ILCS 105/1 et seq., in force as of the date of this Contract or as amended. Nevertheless, the Minimum Wage is required to be paid to those workers described in subsections 4(a)(2)(A) and 4(a)(2)(B) of the Illinois Minimum Wage Law.

Additionally, the Minimum Wage is not required to be paid to employees subject to a collective bargaining agreement that provides for different wages than those required by Mayoral Executive Order 2014-1, if that collective bargaining agreement was in force prior to October 1, 2014 or if that collective bargaining agreement clearly and specifically waives the requirements of the order.

If the payment a Base Wage pursuant to Municipal Code of Chicago Sect. 2-92-610 is required for work or services done under this Contract, and the Minimum Wage is higher than the Base Wage, then the Contractor must pay the Minimum Wage. Likewise, if the payment of a prevailing wage is required and the prevailing wage is higher than the Minimum Wage, then the Contractor must pay the prevailing wage.

Contractors are reminded that they must comply with Municipal Code Chapter 1-24 establishing a minimum wage.

3.3.6.2. Living Wage Ordinance
MCC Sect. 2-92-610 provides for a living wage for certain categories of workers employed in the performance of City contracts, specifically non-City employed security guards, parking attendants, day laborers, home and health care workers, cashiers, elevator operators, custodial workers, and clerical workers ("Covered Employees"). Accordingly, pursuant to MCC Sect. 2-92-610 and regulations promulgated thereunder:

if the Contractor has 25 or more full-time employees, and if at any time during the performance of the contract the Contractor and/or any subcontractor or any other entity that provides any portion of the Services (collectively "Performing Parties") uses 25 or more full-time security guards, or any number of other full-time Covered Employees, then The Contractor's obligation to pay, and to assure payment of, the Base Wage will begin at any time during the Contract term when the conditions set forth in (1) and (2) above are met, and will continue thereafter until the end of the Contract term.

As of July 1, 2016 the Base Wage is $12.15. The current rate can be found on the Department of Procurement Services' website.

Note: As of July 1, 2016, the wage specified by Mayoral Executive Order 2014-1 is higher than the Base Wage rate. Therefore, the higher wage specified by the Executive Order (or other applicable rule or law) must be paid.

Each July 1st the Base Wage will be adjusted, using the most recent federal poverty guidelines for a family of four (4) as published annually by the U.S. Department of Health and Human Services, to constitute the following: the poverty guidelines for a family of four (4) divided by 2000 hours or the current base wage, whichever is higher. At all times during the term of this Contract, Contractor and all other Performing Parties must pay the Base Wage (as adjusted in accordance with the above). If the payment of prevailing wages is required for work or services done under this Contract, and the prevailing wages for Covered Employees are higher than the Base Wage, then the Contractor must pay the prevailing wage rates.

The Contractor must include provisions in all subcontracts requiring its Subcontractors to pay the Base Wage to Covered Employees. The Contractor agrees to provide the City with documentation acceptable to the CPO demonstrating that all Covered Employees, whether employed by the Contractor or by a subcontractor, have been paid the Base Wage, upon the City's request for such documentation. The City may independently audit the Contractor and/or subcontractors to verify compliance herewith.

Failure to comply with the requirements of this Section will be an event of default under this Contract, and further, failure to comply may result in ineligibility for any award of a City contract or subcontract for up to three years.

Not-for-Profit Corporations: If the Contractor is a corporation having Federal tax-exempt status under Section 501(c)(3) of the Internal Revenue Code and is recognized under Illinois not-for-profit law, then the provisions above do not apply.

3.3.6.3. Equal Pay

The Contractor will comply with all applicable provisions of the Equal Pay Act of 1963, 29 U.S.C. 206(d) and the Illinois Equal Pay Act of 2003, 820 ILCS 112/1, *et seq*., as amended, and all applicable related rules and regulations including but not limited to those set forth in 29 CFR Part 1620 and 56 Ill. Adm. Code Part 320.

3.3.7. Economic Disclosure Statement and Affidavit and Appendix A ("EDS")

Pursuant to MCC Ch. 2-154 and 65 ILCS 5/8-10-8.5 any person, business entity or agency submitting a bid or proposal to or contracting with the City of Chicago will be required to complete the Disclosure of Ownership Interests in the EDS. Failure to provide complete or accurate disclosure will render this Contract voidable by the City.

Contractors must complete an online EDS prior to the Bid Opening Date. Contractors are responsible for notifying the City and updating their EDS any time there is a change in circumstances that makes any information provided or certification made in an EDS inaccurate, obsolete or misleading. Failure to so notify the City and update the EDS is grounds for declaring the Contractor in default, terminating the Contract for default, and declaring the Contractor ineligible for future contracts.

Contractor makes certain representations and certifications that the City relies on in its decision to enter into a contract. The Laws and requirements that are addressed in the EDS include the following:

3.3.7.1. Business Relationships With Elected Officials MCC Sect. 2-156-030(b)
Pursuant to MCC Sect. 2-156-030(b), it is illegal for any elected official, or any person acting at the direction of such official, to contact either orally or in writing any other City official or employee with respect to any matter involving any person with whom the elected official has any business relationship that creates a financial interest on the part of the official, or the domestic partner or spouse of the official, or from whom or which he has derived any income or compensation during the preceding twelve months or from whom or which he reasonably expects to derive any income or compensation in the following twelve months. In addition, no elected official may participate in any discussion in any City Council committee hearing or in any City Council meeting or vote on any matter involving the person with whom the elected official has any business relationship that creates a financial interest on the part of the official, or the domestic partner or spouse of the official, or from whom or which he has derived any income or compensation during the preceding twelve months or from whom or which he reasonably expects to derive any income or compensation in the following twelve months.

Violation of MCC Sect. 2-156-030 by any elected official with respect to this contract will be grounds for termination of this contract. The term financial interest is defined as set forth in MCC Chapter 2-156.

3.3.7.2. MCC 1-23 and 720 ILCS 5/33E Bribery, Debts, and Debarment Certification
The Contractor or each joint venture partner, if applicable, must complete the appropriate subsections in the EDS which certify that the Contractor or each joint venture partner, its agents, employees, officers and any subcontractors (a) have not been engaged in or been convicted of bribery or attempted bribery of a public officer or employee of the City of Chicago, the State of Illinois, any agency of the federal government or any state or local government in the United States or engaged in or been convicted of bid-rigging or bid-rotation activities as defined in this section as required by the Illinois Criminal Code; (b) do not owe any debts to the State of Illinois, in accordance with 65 ILCS 5/11-42.1-1 and (c) are not presently debarred or suspended; Certification Regarding Environmental Compliance; Certification Regarding Ethics and Inspector General; and Certification Regarding Court-Ordered Child Support Compliance.

Contractor, in performing under this contract shall comply with MCC Sect. 2-92-320, as follows:

No person or business entity shall be awarded a contract or sub-contract if that person or business entity: (a) has been convicted of bribery or attempting to bribe a public officer or employee of the City of Chicago, the State of Illinois, or any agency of the federal government or of any state or local government in the United States, in that officers or employee's official capacity; or (b) has been convicted of agreement or collusion among bidders or prospective bidders in restraint of freedom of competition by agreement to bid a fixed price, or otherwise; or (c) has made an admission of guilt of such conduct described in (a) or (b) above which is a matter of record but has not been prosecuted for such conduct.

For purposes of this section, where an official, agent or employee of a business entity has committed any offense under this section on behalf of such an entity and pursuant to the direction or authorization of a responsible official thereof, the business entity will be chargeable with the conduct.

One business entity will be chargeable with the conduct of an affiliated agency. Ineligibility under this section will continue for three (3) years following such conviction or admission. The period of ineligibility may be reduced, suspended, or waived by the CPO under certain specific circumstances. Reference is made to Section 2-92-320 for a definition of affiliated agency, and a detailed description of the conditions which would permit the CPO to reduce, suspend, or waive the period of ineligibility.

3.3.7.3. Federal Terrorist (No-Business) List

Contractor warrants and represents that neither Contractor nor an Affiliate, as defined below, appears on the Specially Designated Nationals List, the Denied Persons List, the Unverified List, the Entity List, or the Debarred List as maintained by the Office of Foreign Assets Control of the U.S. Department of the Treasury or by the Bureau of Industry and Security of the U.S. Department of Commerce or their successors, or on any other list of persons or entities with which the City may not do business under any applicable law, rule, regulation, order or judgment.

"Affiliate" means a person or entity which directly, or indirectly through one or more intermediaries, controls, is controlled by or is under common control with Contractor. A person or entity will be deemed to be controlled by another person or entity if it is controlled in any manner whatsoever that results in control in fact by that other person or entity, either acting individually or acting jointly or in concert with others, whether directly or indirectly and whether through share ownership, a trust, a contract or otherwise.

3.3.7.4. Governmental Ethics Ordinance 2-156

Contractor must comply with MCC Ch. 2-156, Governmental Ethics, including but not limited to MCC Sect. 2-156-120 pursuant to which no payment, gratuity or offer of employment will be made in connection with any City contract, by or on behalf of a subcontractor to the prime Contractor or higher tier subcontractor or any person associated therewith, as an inducement for the award of a subcontract or order. Any contract negotiated, entered into, or performed in violation of any of the provisions of this Chapter will be voidable as to the City.

3.3.7.5. Lobbyists

Contractor must comply with Chapter 2-156 of the Municipal Code. Contractor acknowledges that any Agreement entered into, negotiated or performed in violation of any of the provisions of Chapter 2-156, including any contract entered into with any person who has retained or employed a non-registered lobbyist in violation of Section 2-156-305 of the Municipal Code is voidable as to the City.

3.3.8. Restrictions on Business Dealings

3.3.8.1. Conflicts of Interest

The Contractor covenants that it presently has no interest and will not acquire any interest, direct or indirect, in any enterprise which would conflict in any manner or degree with the performance of the work, services or goods to be provided hereunder. The Contractor further covenants that in its performance of the Contract no person having any such interest shall be employed. If the City determines that the Contractor does have such a conflict of interest, the City will notify the Contractor in writing, stating the basis for its determination. The Contractor will thereafter have 30 days in which to respond with reasons why the Contractor believes a conflict of interest does not exist. If the Contractor does not respond or if the City still reasonably determines a conflict of interest to exist, the Contractor must terminate its interest in the other enterprise.

3.3.8.2. Prohibition on Certain Contributions, Mayoral Executive Order 2011-4

No Contractor or any person or entity who directly or indirectly has an ownership or beneficial interest in Contractor of more than 7.5% ("Owners"), spouses and domestic partners of such Owners, Contractor's Subcontractors, any person or entity who directly or indirectly has an ownership or beneficial interest in any Subcontractor of more than 7.5% ("Sub-owners") and spouses and domestic partners of such Sub-owners (Contractor and all the other preceding classes of persons and entities are together, the "Identified Parties"), shall make a contribution of any amount to the Mayor of the City of Chicago (the "Mayor") or to his political fundraising committee during (i) the bid or other solicitation process for this Contract or Other Contract, including while this Contract or Other Contract is executory, (ii) the term of this Contract or any Other Contract between City and Contractor, and/or (iii) any period in which an extension of this Contract or Other Contract with the City is being sought or negotiated.

Contractor represents and warrants that since the date of public advertisement of the specification, request for qualifications, request for proposals or request for information (or any combination of those requests) or, if not competitively procured, from the date the City approached the Contractor or the date the Contractor approached the City, as applicable, regarding the formulation of this Contract, no Identified Parties have made a contribution of any amount to the Mayor or to his political fundraising committee.

Contractor shall not: (a) coerce, compel or intimidate its employees to make a contribution of any amount to the Mayor or to the Mayor's political fundraising committee; (b) reimburse its employees for a contribution of any amount made to the Mayor or to the Mayor's political fundraising committee; or (c) bundle or solicit others to bundle contributions to the Mayor or to his political fundraising committee.

The Identified Parties must not engage in any conduct whatsoever designed to intentionally violate this provision or Mayoral Executive Order No. 2011-4 or to entice, direct or solicit others to intentionally violate this provision or Mayoral Executive Order No. 2011-4.

Violation of, non-compliance with, misrepresentation with respect to, or breach of any covenant or warranty under this provision or violation of Mayoral Executive Order No. 2011-4 constitutes a breach and default under this Contract, and under any Other Contract for which no opportunity to cure will be granted. Such breach and default entitles the City to all remedies (including without limitation termination for default) under this Contract, under Other Contract, at law and in equity. This provision amends any Other Contract and supersedes any inconsistent provision contained therein.

If Contractor violates this provision or Mayoral Executive Order No. 2011-4 prior to award of the Contract resulting from this specification, the CPO may reject Contractor's bid.

For purposes of this provision:

"**Other Contract**" means any agreement entered into between the Contractor and the City that is (i) formed under the authority of MCC Ch. 2-92; (ii) for the purchase, sale or lease of real or personal property; or (iii) for materials, supplies, equipment or services which are approved and/or authorized by the City Council.

"**Contribution**" means a "political contribution" as defined in MCC Ch. 2-156, as amended.

"**Political fundraising committee**" means a "political fundraising committee" as defined in MCC Ch. 2-156, as amended.

3.3.9. Debts Owed to the City; Anti-Scofflaw, MCC Sect. 2-92-380

In addition to the certifications regarding debts owed to the City in the EDS, Contractor is subject to MCC Sect. 2-92-380.

Pursuant to MCC Sect. 2-92-380 and in addition to any other rights and remedies (including set-off) available to the City under this Contract or permitted at law or in equity, the City will be entitled to set off a portion of the contract price or compensation due under the Contract, in an amount equal to the amount of the fines and penalties for each outstanding parking violation complaint and the amount of any debt owed by the contracting party to the City. For purposes of this section, outstanding parking violation complaint means a parking ticket, notice of parking violation, or parking violation complaint on which no payment has been made or appearance filed in the Circuit Court of Cook County within the time specified on the complaint, and debt means a specified sum of money owed to the City for which the period granted for payment has expired.

However no such debt(s) or outstanding parking violation complaint(s)will be offset from the contract price or compensation due under the contract if one or more of the following conditions are met:

the contracting party has entered into an agreement with the Department of Revenue, or other appropriate City department, for the payment of all outstanding parking violation complaints and debts owed to the City and the Contracting party is in compliance with the agreement; or

the contracting party is contesting liability for or the amount of the debt in a pending administrative or judicial proceeding; or the contracting party has filed a petition in bankruptcy and the debts owed the City are dischargeable in bankruptcy.

3.3.10. Other City Ordinances and Policies

3.3.10.1. False Statements

False statements made in connection with this Contract, including statements in, omissions from and failures to timely update the EDS, as well as in any other affidavits, statements or Contract Documents constitute a material breach of the Contract. Any such misrepresentation renders the Contract voidable at the option of the City, notwithstanding any prior review or acceptance by the City of any materials containing such a misrepresentation. In addition, the City may debar Contractor, assert any contract claims or seek other civil or criminal remedies as a result of a misrepresentation (including costs of replacing a terminated Contractor pursuant to MCC Sect. 1-21-010.

3.3.10.2. MacBride Principles Ordinance, MCC Sect. 2-92-580

This law promotes fair and equal employment opportunities and labor practices for religious minorities in Northern Ireland and provide a better working environment for all citizens in Northern Ireland.

In accordance with MCC Sect. 2-92-580, if the primary Contractor conducts any business operations in Northern Ireland, it is hereby required that the Contractor will make all reasonable and good faith efforts to conduct any business operations in Northern Ireland in accordance with the MacBride Principles for Northern Ireland as defined in Illinois Public Act 85-1390 (1988 III. Laws 3220).

For those bidders who take exception in competitive bid contracts to the provision set forth above, the City will assess an eight percent (8%) penalty. This penalty will increase their bid price for the purpose of canvassing the bids in order to determine who is to be the lowest responsible bidder. This penalty will apply only for purposes of comparing bid amounts and will not affect the amount of any contract payment.

The provisions of this Section will not apply to contracts for which the City receives funds administered by the United States Department of Transportation (USDOT) except to the extent Congress has directed that USDOT not withhold funds from states and localities that choose to implement selective purchasing policies based on agreement to comply with the MacBride Principles for Northern Ireland, or to the extent that such funds are not otherwise withheld by the USDOT.

3.3.10.3. City Hiring Plan Prohibitions

A. The City is subject to the June 16, 2014 "City of Chicago Hiring Plan" (the "2014 City Hiring Plan") entered in *Shakman v. Democratic Organization of Cook County*, Case No 69 C 2145 (United States District Court for the Northern District of Illinois). Among other things, the 2014 City Hiring Plan prohibits the City from hiring persons as governmental employees in non-exempt positions on the basis of political reasons or factors.

B. Contractor is aware that City policy prohibits City employees from directing any individual to apply for a position with Contractor, either as an employee or as a subcontractor, and from directing Contractor to hire an individual as an employee or as a Subcontractor. Accordingly, Contractor must follow its own hiring and contracting procedures, without being influenced by City employees. Any and all personnel provided by Contractor under this Contract are employees or Subcontractors of Contractor, not employees of the City of Chicago. This Contract is not intended to and does not constitute, create, give rise to, or

otherwise recognize an employer-employee relationship of any kind between the City and any personnel provided by Contractor.

C. Contractor will not condition, base, or knowingly prejudice or affect any term or aspect of the employment of any personnel provided under this Contract, or offer employment to any individual to provide services under this Contract, based upon or because of any political reason or factor, including, without limitation, any individual's political affiliation, membership in a political organization or party, political support or activity, political financial contributions, promises of such political support, activity or financial contributions, or such individual's political sponsorship or recommendation. For purposes of this Contract, a political organization or party is an identifiable group or entity that has as its primary purpose the support of or opposition to candidates for elected public office. Individual political activities are the activities of individual persons in support of or in opposition to political organizations or parties or candidates for elected public office.

D. In the event of any communication to Contractor by a City employee or City official in violation of paragraph B above, or advocating a violation of paragraph C above, Contractor will, as soon as is reasonably practicable, report such communication to the Hiring Oversight Section of the City's Office of the Inspector General, and also to the head of the relevant City Department utilizing services provided under this Contract. Contractor will also cooperate with any inquiries by OIG Hiring Oversight.

3.3.10.4. Inspector General

It is the duty of any bidder, proposer or Contractor, all Subcontractors, every applicant for certification of eligibility for a City contract or program, and all officers, directors, agents, partners and employees of any bidder, proposer, Contractor, Subcontractor or such applicant to cooperate with the Inspector General in any investigation or hearing, if applicable, undertaken pursuant to MCC Ch. 2-56, respectively. Contractor understands and will abide by all provisions of MCC Ch. 2-56.

All subcontracts must inform Subcontractors of this provision and require understanding and compliance with them.

3.3.10.5. Duty to Report Corrupt Activity

Pursuant to MCC 2-156-018, it is the duty of the Contractor to report to the Inspector General, directly and without undue delay, any and all information concerning conduct which it knows to involve corrupt activity. “Corrupt activity” means any conduct set forth in Subparagraph (a)(1), (2) or (3) of Section 1-23-020 of the MCC. Knowing failure to make such a report will be an event of default under this Contract. Reports may be made to the Inspector General’s toll free hotline, 866-IG-TIPLINE (866-448-4754).

3.3.10.6. Electronic Mail Communication

Electronic mail communication between Contractor and City employees must relate only to business matters between Contractor and the City.

3.3.10.7. EDS Update Obligation

Contractor is required to notify the City and update the EDS whenever there is a change in circumstances that makes any certification or information provided in an EDS inaccurate, obsolete or misleading. Failure to notify the City and update the EDS is grounds for declaring the Contractor in default, termination of the Contract for default, and declaring that the Contractor is ineligible for future contracts.

3.3.10.8. Wheel Tax (City Sticker)

Contractor must pay all Wheel Tax required by Chapter 3-56 of the MCC, as amended from time to time. Contractor should take particular notice of MCC 3-56-020 and MCC 3-56-125 which relate to payment of the tax for vehicles that are used on City streets or on City property by City residents. For the purposes of Chapter 3-56, any business that owns, leases or otherwise controls a place of

business within the City wherein motor vehicles or semi-trailers are stored, repaired, serviced, or loaded or unloaded in connection with the business is also considered to be a City resident.

3.3.11. Compliance with Environmental Laws and Related Matters

3.3.11.1. Definitions

For purposes of this section, the following definitions shall apply:

Environmental Agency: An Environmental Agency is any governmental agency having responsibility, in whole or in part, for any matter addressed by any Environmental Law. An agency need not be responsible only for matters addressed by Environmental Law(s) to be an Environmental Agency for purposes of this Contract.

Environmental Claim: An Environmental Claim is any type of assertion that Contractor or any Subcontractor is liable, or allegedly is liable, or should be held liable, under any Environmental Law, or that Contractor or any Subcontractor has or allegedly has violated or otherwise failed to comply with any Environmental Law. A non-exhaustive list of Environmental Claims includes, without limitation: demand letters, lawsuits and citations of any kind regardless of originating source.

Environmental Law: An Environmental Law is any Law that in any way, directly or indirectly, in whole or in part, bears on or relates to the environment or to human health or safety. A non-exhaustive list of Environmental Laws includes without limitation the Comprehensive Environmental Response, Compensation and Liability Act, 42 U.S.C. 9601, *et seq*., the Resource Conservation and Recovery Act, 42 U.S.C. 6901*, et seq*., the Hazardous Materials Transportation Act, 49 U.S.C. 5101, *et seq*., the Clean Air Act, 42 U.S.C. 7401, *et seq*., the Federal Water Pollution Control Act, 33 U.S.C. 1251, *et seq*., the Occupational Safety and Health Act, 29 U.S.C. 651*, et seq*., the Illinois Environmental Protection Act, 415 ILCS 5/1, *et seq*., the Illinois Occupational Safety and Health Act, 820 ILCS 219/1, *et seq*., Chapters 7-28 and 11-4 of the Chicago Municipal Code, and all related rules and regulations.

Law(s): The word "Law" or "Laws," whether or not capitalized, is intended in the broadest possible sense, including without limitation all federal, state and local: statutes; ordinances; codes; rules; regulations; administrative and judicial orders of any kind; requirements and prohibitions of permits, licenses or other similar authorizations of any kind; court decisions; common law; and all other legal requirements and prohibitions.

Routine: As applied to reports or notices, "routine" refers to a report or notice that must be made, submitted or filed on a regular, periodic basis (e.g., quarterly, annually, biennially) and that in no way arises from a spill or other release or any kind, or from an emergency response situation, or from any actual, possible or alleged noncompliance with any Environmental Law.

3.3.11.2. Joint Ventures

If Contractor or any Subcontractor is a joint venture, then every party to every such joint venture is deemed a Subcontractor for purposes of this section, which is entitled "Compliance with Environmental Laws and Related Matters" and every subsection thereof.

3.3.11.3. Compliance With Environmental Laws

As part of or in addition to its obligation to observe and comply with all applicable laws, Contractor must observe and comply with all applicable Environmental Laws and ensure that all Subcontractors observe and comply with all applicable Environmental Laws.

Any noncompliance, by Contractor or any Subcontractor, with any Environmental Law during the time that this Contract is effective is an event of default, regardless of whether the noncompliance relates to performance of this Contract. This includes without limitation any failure by Contractor or any Subcontractor to keep current, throughout the term of this Contract, all insurance certificates, permits and other authorizations of any kind that are required, directly or indirectly, by any Environmental Law.

3.3.11.4. Costs

Any cost arising directly or indirectly, in whole or in part, from any noncompliance, by Contractor or any Subcontractor, with any Environmental Law, will be borne by the Contractor and not by the City. This includes, but is not limited to, any cost associated with removal of waste or other material from a facility lacking any required permit. No provision of this Contract is intended to create or constitute an exception to this provision.

3.3.11.5. Proof of Noncompliance; Authority; Cure

Any adjudication, whether administrative or judicial, against Contractor or any Subcontractor, for a violation of any Environmental Law, is sufficient proof of noncompliance, and therefore of an event of default, for purposes of this Contract.

Any citation issued to/against Contractor or any Subcontractor, by any government agent or entity, alleging a violation of any Environmental Law, is sufficient proof of noncompliance for purposes of this Contract, and therefore of an event of default, if the citation contains or is accompanied by, or the City otherwise obtains, any evidence sufficient to support a reasonable conclusion that a violation has occurred.

Any other evidence of noncompliance with any Environmental Law is sufficient proof of noncompliance for purposes of this Contract, and therefore of an event of default, if the evidence is sufficient to support a reasonable conclusion that noncompliance has occurred.

The CPO shall have the authority to determine whether noncompliance with an Environmental Law has occurred, based on any of the foregoing types of proof. Upon determining that noncompliance has occurred, s/he may in his/her discretion declare an event of default and may in his/her discretion offer Contractor an opportunity to cure the event of default, such as by taking specified actions, which may include without limitation ceasing and desisting from utilizing a Subcontractor.

The CPO may consider many factors in determining whether to declare an event of default, whether to offer an opportunity to cure, and if so any requirements for cure, including without limitation: the seriousness of the noncompliance, any effects of the noncompliance, Contractor's and/or Subcontractor's history of compliance or noncompliance with the same or other Laws, Contractor's and/or Subcontractor's actions or inaction towards mitigating the noncompliance and its effects, and Contractor's or Subcontractor's actions or inaction towards preventing future noncompliance.

3.3.11.6. Copies of Notices and Reports; Related Matters

If any Environmental Law requires Contractor or any Subcontractor to make, submit or file any non-Routine notice or report of any kind, to any Environmental Agency or other person, including without limitation any agency or other person having any responsibility for any type of emergency response activity, then Contractor must deliver a complete copy of the notice or report (or, in the case of legally required telephonic or other oral notices or reports, a comprehensive written summary of same) to the Law Department within 24 hours of making, submitting or filing the original report.

Additionally, to the extent not already achieved by Contractor's compliance with this paragraph 3.3.10.6 and paragraph 3.3.10.8, Contractor must notify the Commissioner of the Department, within 24 hours of learning of any of the following:

(i) any release, suspected release, or threatened release of any waste or other material relating to the work performed under the Contract;

(ii) any notice of any kind received by Contractor, any Subcontractor, or any employee or agent of Contractor or any Subcontractor, from an Environmental Agency or any other person, of or relating to any release, suspected release, or threatened release of any waste or other material relating to the work performed under the Contract.

This notification must be in writing, must be submitted by a fast method such as email, and must include, to the best of Contractor's knowledge at the time of submittal: the types and amounts of the waste or other material at issue; the location; the cause and any contributing factors; all actions

taken, being taken, and intended to be taken by Contractor and any Subcontractors; and a copy of any notice received by Contractor, any Subcontractor, or any employee or agent of Contractor or any Subcontractor. Contractor must also provide written updates to the Commissioner by email or other method as indicated by the Commissioner whenever Contractor becomes aware of information that is different from or additional to the information provided in the initial notification.

The requirements of this provision apply, regardless of whether the subject matter of the required notice or report concerns performance of this Contract.

Failure to comply with any requirement of this provision is an event of default.

3.3.11.7. Requests for Documents and Information

If the Commissioner requests documents or information of any kind that directly or indirectly relate(s) to performance of this Contract, Contractor must obtain and provide the requested documents and/or information to the Commissioner within 5 business days.

Failure to comply with any requirement of this provision is an event of default.

3.3.11.8. Environmental Claims and Related Matters

Within 24 hours of receiving, or of any Subcontractor's receiving, notice of any Environmental Claim, Contractor must submit copies of all documents constituting or relating to the Environmental Claim to the Law Department. Thereafter, Contractor must submit copies of related documents if requested by the Law Department. These requirements apply, regardless of whether the Environmental Claim concerns performance of this Contract.

Failure to comply with any requirement of this provision is an event of default.

3.3.11.9. Preference for Recycled Materials

To the extent practicable and economically feasible and to the extent that it does not reduce or impair the quality of any work or services, Contractor must use recycled products in performance of the Contract pursuant to U.S. Environment Protection Agency (U.S. EPA) guidelines at 40 CFR Parts 247-253, which implement section 6002 of the Resource Conservation and Recovery Act, as amended, 42 USC § 6962.

3.3.11.10. No Waste Disposal in Public Way MCC 11-4-1600(E)

Contractor warrants and represents that it, and to the best of its knowledge, its Subcontractors have not violated and are not in violation of the following sections of the Code (collectively, the Waste Sections):

7-28-390 Dumping on public way;
7-28-440 Dumping on real estate without permit;
11-4-1410 Disposal in waters prohibited;
11-4-1420 Ballast tank, bilge tank or other discharge;
11-4-1450 Gas manufacturing residue;
11-4-1500 Treatment and disposal of solid or liquid waste;
11-4-1530 Compliance with rules and regulations required;
11-4-1550 Operational requirements; and
11-4-1560 Screening requirements.

During the period while this Contract is executory, Contractor's or any Subcontractor's violation of the Waste Sections, whether or not relating to the performance of this Contract, constitutes a breach of and an event of default under this Contract, for which the opportunity to cure, if curable, will be granted only at the sole discretion of the CPO. Such breach and default entitles the City to all remedies under the Contract, at law or in equity.

This section does not limit the Contractor's and its Subcontractors' duty to comply with all applicable federal, state, county and municipal laws, statutes, ordinances and executive orders, in effect now or later, and whether or not they appear in this Contract.

Non-compliance with these terms and conditions may be used by the City as grounds for the termination of this Contract, and may further affect the Contractor's eligibility for future contract awards.

3.4. Contract Disputes

3.4.1. Procedure for Bringing Disputes to the Department

The Contractor and using Department must attempt to resolve all disputes arising under this Contract in good faith, taking such measures as, but not limited to investigating the facts of the dispute and meeting to discuss the issue(s).

In order to bring a dispute to the Commissioner of a Department, Contractor must provide a general statement of the basis for its claim, the facts underlying the claim, reference to the applicable Contract provisions, and all documentation that describes, relates to and supports the claim. By submitting a Claim, the Contractor certifies that:

A. The Claim is made in good faith;

B. The Claim's supporting data are accurate and complete to the best of the person's knowledge and belief;

C. The amount of the Claim accurately reflects the amount that the claimant believes is due from the City; and

D. The certifying person is duly authorized by the claimant to certify the Claim.

The Commissioner shall have 30 days from receipt of the Claim to render a written "final decision of the Commissioner" stating the Commissioner's factual and contractual basis for the decision. However, the Commissioner may take an additional period, not to exceed 10 days, to render the final decision. If the Commissioner does not render a "final decision of the Commissioner" within the prescribed time frame, then the Claim should be deemed denied by the Commissioner.

3.4.2. Procedure for Bringing Disputes before the CPO

Only after the Commissioner has rendered a final decision denying the Contractor’s claim may a dispute be brought before the CPO.

If the Contractor and using Department are unable to resolve the dispute, prior to seeking any judicial action, the Contractor must and the using Department may submit the dispute the CPO for an administrative decision based upon the written submissions of the parties. The party submitting the dispute to the CPO must include documentation demonstrating its good faith efforts to resolve the dispute and either the other party’s failure to exercise good faith efforts or both parties’ inability to resolve the dispute despite good faith efforts.

The decision of the CPO is final and binding. The sole and exclusive remedy to challenge the decision of the CPO is judicial review by means of a common law writ of certiorari.

The administrative process is described more fully in the "Regulations of the Department of Procurement Services for Resolution of Disputes between Contractors and the City of Chicago", which are available in City Hall, 121 N. LaSalle Street, Room 103, Bid and Bond Room, and on-line at:

http://www.cityofchicago.org/content/dam/city/depts/dps/RulesRegulations/Dispute_Regulations_2002.pdf

3.5. Events of Default and Termination

3.5.1. Events of Default

In addition to any breach of contract and events of default described within the Contract Documents, the following constitute an event of default:

A. Any material misrepresentation, whether negligent or willful and whether in the inducement or in the performance, made by Contractor to the City.

B. Contractor's material failure to perform any of its obligations under this Contract including the following:

C. Failure to perform the Services with sufficient personnel and equipment or with sufficient material to ensure the timely performance of the Services

D. Failure to have and maintain all professional licenses required by law to perform the Services;

E. Failure to timely perform the Services;

F. Failure to perform the Services in a manner reasonably satisfactory to the Commissioner or the CPO or inability to perform the Services satisfactorily as a result of insolvency, filing for bankruptcy or assignment for the benefit of creditors;

G. Failure to promptly re-perform, as required, within a reasonable time and at no cost to the City, Services that are rejected as erroneous or unsatisfactory;

H. Discontinuance of the Services for reasons within Contractor's reasonable control;

I. Failure to update promptly EDS(s) furnished in connection with this Contract when the information or responses contained in it or them is no longer complete or accurate;

J. Failure to comply with any other term of this Contract, including the provisions concerning insurance and nondiscrimination; and

K. Any change in ownership or control of Contractor without the prior written approval of the CPO, which approval the CPO will not unreasonably withhold.

L. Contractor's default under any other Contract it may presently have or may enter into with the City during the life of this Contract. Contractor acknowledges and agrees that in the event of a default under this Contract the City may also declare a default under any such other agreements.

M. Contractor’s repeated or continued violations of City ordinances unrelated to performance under the Contract that in the opinion of the CPO indicate a willful or reckless disregard for City laws and regulations.

N. Contractor’s use of a subcontractor that is currently debarred by the City or otherwise ineligible to do business with the City.

3.5.2. Cure or Default Notice

The occurrence of any event of default permits the City, at the City(s sole option, to declare Contractor in default.

The CPO will give Contractor written notice of the default, either in the form of a cure notice ("Cure Notice"), or, if no opportunity to cure will be granted, a default notice ("Default Notice").

If a Cure Notice is sent, the CPO may in his/her sole discretion will give Contractor an opportunity to cure the default within a specified period of time, which will typically not exceed 30 days unless extended by the CPO. The period of time allowed by the CPO to cure will depend on the nature of the event of default and the Contractor’s ability to cure. In some circumstances the event of default may be of such a nature that it cannot be cured. Failure to cure within the specified time may result in a Default Notice to the Contractor.

Whether to issue the Contractor a Default Notice is within the sole discretion of the CPO and neither that decision nor the factual basis for it is subject to review or challenge under the Disputes provision of this Contract

If the CPO issues a Default Notice, the CPO will also indicate any present intent the CPO may have to terminate this Contract. The decision to terminate is final and effective upon giving the notice. If the CPO decides not to terminate, this decision will not preclude the CPO from later deciding to terminate

the Contract in a later notice, which will be final and effective upon the giving of the notice or on such later date set forth in the Default Notice.

When a Default Notice with intent to terminate is given, Contractor must discontinue any Services, unless otherwise directed in the notice.

3.5.3. Remedies
After giving a Default Notice, the City may invoke any or all of the following remedies:

A. The right to take over and complete the Services, or any part of them, at Contractor(s expense and as agent for Contractor, either directly or through others, and bill Contractor for the cost of the Services, and Contractor must pay the difference between the total amount of this bill and the amount the City would have paid Contractor under the terms and conditions of this Contract for the Services that were assumed by the City as agent for Contractor

B. The right to terminate this Contract as to any or all of the Services yet to be performed effective at a time specified by the City;

C. The right to seek specific performance, an injunction or any other appropriate equitable remedy;

D. The right to seek money damages;

E. The right to withhold all or any part of Contractor's compensation under this Contract;

F. The right to deem Contractor non-responsible in future contracts to be awarded by the City.

3.5.4. Non-Exclusivity of Remedies
The remedies under the terms of this Contract are not intended to be exclusive of any other remedies provided, but each and every such remedy is cumulative and is in addition to any other remedies, existing now or later, at law, in equity or by statute. No delay or omission to exercise any right or power accruing upon any event of default impairs any such right or power, nor is it a waiver of any event of default nor acquiescence in it, and every such right and power may be exercised from time to time and as often as the City considers expedient.

3.5.5. City Reservation of Rights
If the CPO considers it to be in the City(s best interests, the CPO may elect not to declare default or to terminate this Contract. The parties acknowledge that this provision is solely for the benefit of the City and that if the City permits Contractor to continue to provide the Services despite one or more events of default, Contractor is in no way relieved of any of its responsibilities, duties or obligations under this Contract, nor does the City waive or relinquish any of its rights.

3.5.6. Early Termination
The City may terminate this Contract, in whole or in part, at any time by a notice in writing from the City to the Contractor. The effective date of termination will be the date the notice is received by the Contractor or the date stated in the notice, whichever is later.

After the notice is received, the Contractor must restrict its activities, and those of its Subcontractors, to activities pursuant to direction from the City. No costs incurred after the effective date of the termination are allowed unless the termination is partial.

Contractor is not entitled to any anticipated profits on services, work, or goods that have not been provided. The payment so made to the Contractor is in full settlement for all services, work or goods satisfactorily provided under this Contract. If the Contractor disputes the amount of compensation determined by the City to be due Contractor, then the Contractor must initiate dispute settlement procedures in accordance with the Disputes provision.

If the City's election to terminate this Contract for default pursuant to the default provisions of the Contract is determined in a court of competent jurisdiction to have been wrongful, then in that case the termination is to be deemed to be an early termination pursuant to this Early Termination provision.

3.6. Department-specific Requirements
Contractor must comply with the relevant user Department's specific requirements in the performance of this Contract if applicable.

3.6.1. Department of Aviation Standard Requirements
For purposes of this section "Airport" refers to either Midway International Airport or O'Hare International Airport, which are both owned and operated by the City of Chicago.

3.6.1.1. Confidentiality of Airport Security Data
Contractor has an ongoing duty to protect confidential information, including but not limited to any information exempt from disclosure under the Illinois Freedom of Information Act such as information affecting security of the airport ("Airport Security Data"). Airport Security Data includes any Sensitive Security Information as defined by 49 CFR Part 1520. Contractor acknowledges that information provided to, generated by, or encountered by Contractor may include Airport Security Data. If Contractor fails to safeguard the confidentiality of Airport Security Data, Contractor is liable for the reasonable costs of actions taken by the City, the airlines, the Federal Aviation Administration ("FAA"), or the Transportation Security Administration ("TSA") that the applicable entity, in its sole discretion, determines to be necessary as a result, including without limitation the design and construction of improvements, procurement and installation of security devices, and posting of guards. All Subcontracts or purchase orders entered into by the Contractor, with parties providing material, labor or services to complete the Work, must contain the language of this section. If the Contractor fails to incorporate the required language in all Subcontracts or purchase orders, the provisions of this section are deemed incorporated in all Subcontracts or purchase orders.

3.6.1.2. Aviation Security
This Contract is subject to the airport security requirements of 49 United States Code, Chapter 449, as amended, the provisions of which govern airport security and are incorporated by reference, including without limitation the rules and regulations in 14 CFR Part 107 and all other applicable rules and regulations promulgated under them. All employees providing services at the City's airports must be badged by the City. (See Airport Security Badges.) Contractor, Subcontractors and the respective employees of each are subject to such employment investigations, including criminal history record checks, as the Administrator of the Federal Aviation Administration ("FAA"), the Under Secretary of the Transportation Security Administration ("TSA"), and the City may deem necessary. Contractor, Subcontractors, their respective employees, invitees and all other persons under the control of Contractor must comply strictly and faithfully with any and all rules, regulations and directions which the Commissioner, the FAA, or the TSA may issue from time to time may issue during the life of this Contract with regard to security, safety, maintenance and operation of the Airport and must promptly report any information regarding suspected violations in accordance with those rules and regulations.

Gates and doors that permit entry into restricted areas at the Airport must be kept locked by Contractor at all times when not in use or under Contractor's constant security surveillance. Gate or door malfunctions must be reported to the Commissioner without delay and must be kept under constant surveillance by Contractor until the malfunction is remedied.

3.6.1.3. Airport Security Badges
As part of airport operations and security, the Contractor must obtain from the airport badging office Airport Security Badges for each of his employees, subcontractors, material men, invitees or any person(s) over whom Contractor has control, which must be visibly displayed at all times while at the airport. No person will be allowed beyond security checkpoints without a valid Airport Security Badge. Each such person must submit signed and properly completed application forms to receive Airport Security Badges. Additional forms and tests may be required to obtain Airport Drivers Certification and Vehicle Permits. The application forms will solicit such information as the Commissioner may require in his discretion, including but not limited to name, address, date of

birth (and for vehicles, driver's license and appropriate stickers). The Contractor is responsible for requesting and completing the form for each employee and subcontractor employee who will be working at the Airport and all vehicles to be used on the job site. Upon signed approval of the application by the Commissioner or his designee, the employee will be required to attend a presentation regarding airport security and have his or her photo taken for the badge. The Commissioner may grant or deny the application in his sole discretion. The Contractor must make available to the Commissioner, within one day of request, the personnel file of any employee who will be working on the project.

As provided in Aviation Security above, in order for a person to have an Airport Security Badge that allows access to the airfield or aircraft, a criminal history record check (CHRC) conducted by the Department of Aviation will also be required. The CHRC will typically include a fingerprint analysis by the Federal Bureau of Investigation and such other procedures as may be required by the TSA.

Airport Security Badges, Vehicle Permits and Drivers Licenses will only be issued based upon properly completed application forms. Employees or vehicles without proper credentials may be removed from the secured area and may be subject to fine or arrest. Contractor will be jointly and severally liable for any fines imposed on its employees or its Subcontractors employees.

In addition to other rules and regulations, the following rules related to Airport Security Badges, Vehicle Permits and Drivers Licenses must be adhered to:

A. Each person must wear and display his or her Airport Security Badge on their outer apparel at all times while at the airport.

B. All individuals operating a vehicle on the Aircraft Operations Area (AOA) must be familiar and comply with motor driving regulations and procedures of the State of Illinois, City of Chicago and the Department of Aviation. The operator must be in possession of a valid, State-issued Motor Vehicle Operators Driver's License. All individuals operating a vehicle on the AOA without an escort must also be in possession of a valid Aviation-issued Airport Drivers Permit.

C. All operating equipment must have an Airport Vehicle Access Permit affixed to the vehicle at all times while operating on the Airport. All required City stickers and State Vehicle Inspection stickers must be valid.

D. Individuals must remain within their assigned area and haul routes unless otherwise instructed by the Department of Aviation.

E. The Contractors personnel who function as supervisors, and those that escort the Contractors equipment/operators to their designated work sites, may be required to obtain an added multi-area access designation on their personnel Airport Security Badge which must also be displayed while on the AOA.

3.6.1.4. General Requirements Regarding Airport Operations

3.6.1.4.1. Priority of Airport Operations

Where the performance of the Contract may affect airport operation, the Contractor must cooperate fully with the Commissioner and his representatives in all matters pertaining to public safety and airport operation. Whether or not measures are specifically required by this Contract, the Contractor at all times must maintain adequate protection to safeguard aircraft, the public and all persons engaged in the work and must take such precaution as will accomplish such end, without interference with aircraft, the public, or maintenance and operations of the airport.

The Contractor's attention is drawn to the fact that airport facilities and infrastructure, including but not limited to runways, taxiways, vehicular roadways, loadways, loading aprons, concourses, holdrooms, gates, and passenger right-of-ways, are being used for scheduled and unscheduled civilian air transportation. Arrivals and departures are under the control of the

FAA control tower(s). Use of the Airport for air transportation takes precedence over all of the Contractor's operations. No extra compensation will be allowed for any delays brought about by the operations of the Airport which require that Contractor's work must be interrupted or moved from one part of the work site to another.

3.6.1.4.2. Interruption of Airport Operations

If Contractor requires interruption of Airport facilities or utilities in order to perform work, Contractor must notify the Deputy Commissioner in charge of the project at least five (5) working days in advance of such time and must obtain the Deputy Commissioner's approval prior to interrupting the service. Interruption of service must be kept to an absolute minimum, and to the extent practicable the work which occasions such interruptions must be performed in stages in order to reduce the time of each interruption. In case of interruptions of electrical services, service must be restored prior to sunset of the same day.

Prior to start of work, the Contractor must request of the Deputy Commissioner in charge of the project to provide specific requirements and instructions which are applicable to the particular work site areas, including, but not limited to, areas available for storage of any equipment, materials, tools and supplies needed to perform the work. Contractors must advise the Deputy Commissioner in charge of the project of the volume of equipment, materials, tools, and supplies that will be required in the secured areas of the airport in order to make arrangements for inspection of such equipment, materials, tools, and supplies at a security checkpoint.

3.6.1.4.3. Safeguarding of Airport Property and Operations

The Contractor must not permit or allow its employees, subcontractors, material men, invitees or any other persons over whom Contractor has control to enter or remain upon, or to bring or permit any equipment, materials, tools, or supplies to remain upon any part of the work site if any hazard to aircraft, threat to airport security, or obstruction of airport maintenance and operations, on or off the ground, would be created in the opinion of either the Commissioner or the Deputy Commissioner. Contractors must safeguard, and may be required to account for, all items brought beyond a security checkpoint, especially with respect to tools used in a terminal building.

3.6.1.4.4. Work on the Airfield

For any work on the airfield, between sunset and sunrise, any equipment and materials stored outside must be marked with red obstruction lights acceptable to the Commissioner and in conformity with all FAA requirements, including Advisory Circular 150/5345-43F. All obstruction lights must be kept continuously in operation between sunset and sunrise 7 days a week and also during any daylight periods when aircraft ceiling is below 500 feet and visibility is less than 5 miles. Information on ceiling and visibility may be obtained by the Contractor on request at the office of the Deputy Commissioner of Operations or from the FAA Control Tower Operator. Proper compliance with these obstruction light requirements is essential to the protection of aircraft and human life and the Contractor has the responsibility of taking the initiative at all times to be aware of ceiling and visibility conditions, without waiting for the FAA Control Tower Operator or any other City representative to ask the Contractor to post obstruction lights.

For any work on the airfield, the Contractor must furnish aircraft warning flags, colored orange and white, in two sizes, one size 2' x 3' for hand use, and one size 3' x 5'. Each separate group or individual in all work areas, regardless of whether or not near runways, taxiways or aprons, must display a flag which must be maintained vertical at all times. Each truck or other piece of equipment of the Contractor must have attached to it, in a vertical and clearly visible position, a warning flag of the larger size. Except as otherwise agreed by the Commissioner or his designee, all cranes or booms used for construction work on the airfield must be lowered to ground level and moved 200 feet off the runways, taxiways and aprons during all hours of

darkness and during all daylight hours when the aircraft ceiling is below the minimums specified in this section.

The Contractor acknowledges the importance of fully complying with the requirements of this section in order to protect aircraft and human life, on or off the ground. Failure on the part of the Contractor to perform the work in accordance with the provisions of this section and to enforce same with regard to all subcontractors, material men, laborers, invitees and all other persons under the Contractor's control is an event of default.

3.6.1.4.5. Parking Restrictions
Prior to commencing work, the Contractor must provide the Deputy Commissioner in charge of the project with an estimate of the number of vehicles that will require parking. Contractors are encouraged to provide employee parking elsewhere and shuttle their employees to the work site. The Department of Aviation may, but is not required to, provide parking areas for a limited number of vehicles in designated storage areas. All other vehicles must be parked in the public parking lots at the Airport, and there will be no reduced rate or complimentary parking for such vehicles. Employees must not, at any time, park their personal automobiles, no matter how short the duration, in any drive, road, or any other non-parking lot location at the airport. Such vehicles will be subject to immediate towing at the employees expense.

3.6.1.5. General Civil Rights (Airport and Airway Improvement Act of 1982, Section 520)
The contractor agrees that it will comply with pertinent statutes, Executive Orders and such rules as are promulgated to ensure that no person shall, on the grounds of race, creed, color, national origin, sex, age, or handicap be excluded from participating in any activity conducted with or benefiting from Federal assistance.

This provision binds the contractors from the bid solicitation period through the completion of the contract. This provision is in addition to that required of Title VI of the Civil Rights Act of 1964.

3.6.2. Emergency Management and Communications (OEMC) Security Requirements

3.6.2.1. Identification of Workers and Vehicles
All employees and vehicles working within O.E.M.C facilities must be properly identified. All vehicles and personnel passes will be issued to the Contractor by the Executive Director, as required. Contractor, Subcontractors, and employees must return identification material to the Executive Director upon completion of their respective work within the Project, and in all cases, the Contractor must return all identification material to the Executive Director after completion of the Project. Final Contract Payment will not be made until all passes issued have been returned to O.E.M.C Security.

3.6.2.2. Access to Facilities
For purposes of this section, "employee" refers to any individual employed or engaged by Contractor or by any Subcontractor. If the Contractor, or any employee, in the performance of this Contract, has or will have access to a Office of Emergency Management and Communications (O.E.M.C) facility, the City may conduct such background and employment checks, including criminal history record checks and work permit documentation, as the Executive Director of the Office of Emergency Management and Communications and the City may deem necessary, on the Contractor, any Subcontractor, or any of their respective employees. The Executive Director of the Office of Emergency Management and Communications has the right to require the Contractor to supply or provide access to any additional information the Executive Director deems relevant. Before beginning work on the project, Contractor must:

Provide the City with a list of all employees requiring access to enable the City to conduct such background and employment checks;

Deliver to the City consent forms signed by all employees who will work on the project consenting to the City's and the Contractor's performance of the background checks described in this Section; and

Deliver to the City consent forms signed by all employees who will require access to the O.E.M.C facility consenting to the searches described in this Section.

The Executive Director may preclude Contractor, any Subcontractor, or any employee from performing work on the project. Further, the Contractor must immediately report any information to the Executive Director relating to any threat to O.E.M.C infrastructure or facilities or the water supply of the City and must fully cooperate with the City and all governmental entities investigating the threat. The Contractor must, notwithstanding anything contained in the Contract Documents to the contrary, at no additional cost to the City, adhere, and cause its Subcontractors to adhere, to any security and safety guidelines developed by the City and furnished to the Contractor from time to time during the term of the Contract and any extensions of it.

Each employee whom Contractor wishes to have access to an O.E.M.C facility must submit a signed, completed "Area Access Application" to the O.E.M.C to receive a O.E.M.C Security Badge. If Contractor wishes a vehicle to have access to a O.E.M.C facility, Contractor must submit a vehicle access application for that vehicle. The applications will solicit such information as the Executive Director may require in his discretion, including name, address, date of birth (and for vehicles, driver's license and appropriate stickers). The Contractor is responsible for requesting and completing these forms for each employee who will be working at O.E.M.C facilities and all vehicles to be used on the job site. The Executive Director may grant or deny the application in his sole discretion. The Contractor must make available to the Executive Director, within one (1) day of request, the personnel file of any employee who will be working on the project.

At the Executive Director's request, the Contractor and Subcontractor must maintain an employment history of employees going back five years from the date Contractor began Work or Services on the project. If requested, Contractor must certify that it has verified the employment history as required on the form designated by the Executive Director. Contractor must provide the City, at its request, a copy of the employment history for each employee. Employment history is subject to audit by the City.

3.6.2.3. Security Badges and Vehicle Permits

O.E.M.C Security Badges and Vehicle Permits will only be issued based upon properly completed Area Access Application Forms. Employees or vehicles without proper credentials will not be allowed on O.E.M.C property.

The following rules related to Security Badges and Vehicle Permits must be adhered to:

A. Each employee must wear and display the O.E.M.C Security Badge issued to that employee on his or her outer apparel at all times.

B. At the sole discretion of the Executive Director and law enforcement officials, including but not limited to the Chicago Police Department, Cook County Sheriffs Office, Illinois State Police or any other municipal, state or federal law enforcement agency, all vehicles (and their contents) are subject to interior and/or exterior inspection entering or exiting O.E.M.C facilities, and all employees and other individuals entering or exiting O.E.M.C facilities are subject to searches. Vehicles may not contain any materials other than those needed for the project. The Executive Director may deny access to any vehicle or individual in his sole discretion.

C. All individuals operating a vehicle on O.E.M.C property must be familiar and comply with motor driving regulations and procedures of the State of Illinois and the City of Chicago. The operator must be in possession of a valid, state-issued Motor Vehicle Operator's Driver License.

D. All required City stickers and State Vehicle Inspection stickers must be valid.

E. Individuals must remain within their assigned area and haul routes unless otherwise instructed by the City.

F. Access to the Work sites will be as shown or designated on the Contract Documents Drawings or determined by the Executive Director. The Executive Director may deny access when, in his sole discretion, the vehicle or individual poses some security risk to O.E.M.C.

3.6.2.4. Gates and Fences

Whenever the Contractor receives permission to enter O.E.M.C property in areas that are exit/entrance points not secured by the City, the Contractor may be required to provide gates that comply with O.E.M.C design and construction standards. Contractor must provide a licensed and bonded security guard, subject to the Executive Director's approval and armed as deemed necessary by the Executive Director, at the gates when the gates are in use. O.E.M.C Security will provide the locks. Failure to provide and maintain the necessary security will result in an immediate closure by O.E.M.C personnel of the point of access.

Stockpiling materials and parking of equipment or vehicles near O.E.M.C security fencing is prohibited.

Any security fencing, gates, or alarms damaged by the Contractor or its Subcontractors must be manned by a licensed and bonded security guard of the Contractor at Contractor's expense until the damaged items are restored. Contractor must restore them to their original condition within an eight (8) hour period from the time of notice given by the Executive Director.

Temporary removal of any security fencing, gate or alarm to permit construction must be approved by the Executive Director, and Contractor must man the site by a licensed and bonded security guard, approved by and armed as deemed necessary by the Executive Director, at Contractor's expense, on a twenty-four (24) hour basis during the period of temporary removal. Contractor must restore the items removed to their original condition when construction is completed.

3.6.2.5. Hazardous or Illegal Materials

Unauthorized hazardous or illegal materials, including but not limited to hazardous materials as defined in 49 C.F.R. Parts 100-185 (e.g. explosives, oxidizers, radiological materials, infectious materials), contraband, firearms and other weapons, illegal drugs and drug paraphernalia, may not be taken on O.E.M.C property. Alcoholic beverages are also prohibited.

3.6.3. Chicago Police Department Security Requirements

As part of Police operations and security, the Contractor must obtain from the Police Department, Security Badges for each of its employees, subcontractors, material men, invitees or any person(s) over whom Contractor has control, which must be visibly displayed at all times while at any Police Department facility. No person will be allowed beyond security checkpoints without a valid Security Badge. Each such person must submit signed and properly completed application forms to receive Security Badges. The application forms will solicit such information as the Superintendent may require; including but not limited to name, address, date of birth (driver's license). The Contractor is responsible for requesting and completing the form for each employee and subcontractors employee. The Superintendent may grant or deny the application in his sole discretion. The Contractor must make available to the Superintendent, within one (1) day of request, the personnel file of any employee who will be working on the project.

In addition to other rules and regulations, the following rules related to Security Badges, must be adhered to:

A. Each person must wear and display his or her Security Badge on their outer apparel at all times while at any Chicago Police Department facility.

B. Individuals must remain within their assigned area unless otherwise instructed by the Chicago Police Department.

3.6.4. Department of Water Management ("DOWM") Security Requirements

3.6.4.1. Identification of Workers and Vehicles

All employees and vehicles working within DOWM facilities must be properly identified. All vehicles and personnel passes will be issued to the Contractor by the Commissioner, as required. Contractor, Subcontractors, and employees must return identification material to the Commissioner upon completion of their respective work within the Project, and in all cases, the Contractor must return all identification material to the Commissioner after completion of the Project. Final Contract Payment will not be made until all passes issued have been returned to DOWM Security.

3.6.4.2. Access to Facilities

For purposes of this section, "employee" refers to any individual employed or engaged by Contractor or by any Subcontractor. If the Contractor, or any employee, in the performance of this Contract, has or will have access to a Department of Water Management (DOWM) facility, the City may conduct such background and employment checks, including criminal history record checks and work permit documentation, as the Commissioner of the Department of Water Management and the City may deem necessary, on the Contractor, any Subcontractor, or any of their respective employees. The Commissioner of the Department of Water Management has the right to require the Contractor to supply or provide access to any additional information the Commissioner deems relevant. Before beginning work on the project, Contractor must:

Provide the City with a list of all employees requiring access to enable the City to conduct such background and employment checks;

Deliver to the City consent forms signed by all employees who will work on the project consenting to the City's and the Contractor's performance of the background checks described in this Section; and

Deliver to the City consent forms signed by all employees who will require access to the DOWM facility consenting to the searches described in this Section.

The Commissioner may preclude Contractor, any Subcontractor, or any employee from performing work on the project. Further, the Contractor must immediately report any information to the Commissioner relating to any threat to DOWM infrastructure or facilities or the water supply of the City and must fully cooperate with the City and all governmental entities investigating the threat. The Contractor must, notwithstanding anything contained in the Contract Documents to the contrary, at no additional cost to the City, adhere, and cause its Subcontractors to adhere, to any security and safety guidelines developed by the City and furnished to the Contractor from time to time during the term of the Contract and any extensions of it.

3.6.4.3. Security Badges and Vehicle Permits

Each employee whom Contractor wishes to have access to a DOWM facility must submit a signed, completed "Area Access Application" to the DOWM to receive a DOWM Security Badge. If Contractor wishes a vehicle to have access to a DOWM facility, Contractor must submit a vehicle access application for that vehicle. The applications will solicit such information as the Commissioner may require in his discretion, including name, address, date of birth (and for vehicles, driver's license and appropriate stickers). The Contractor is responsible for requesting and completing these forms for each employee who will be working at DOWM facilities and all vehicles to be used on the job site. The Commissioner may grant or deny the application in his sole discretion. The Contractor must make available to the Commissioner, within one (1) day of request, the personnel file of any employee who will be working on the project.

At the Commissioner's request, the Contractor and Subcontractor must maintain an employment history of employees going back five years from the date Contractor began Work or Services on the project. If requested, Contractor must certify that it has verified the employment history as required on the form designated by the Commissioner. Contractor must provide the City, at its request, a copy of the employment history for each employee. Employment history is subject to audit by the City.

DOWM Security Badges and Vehicle Permits will only be issued based upon properly completed Area Access Application Forms. Employees or vehicles without proper credentials will not be allowed on DOWM property.

The following rules related to Security Badges and Vehicle Permits must be adhered to:

A. Each employee must wear and display the DOWM Security Badge issued to that employee on his or her outer apparel at all times.

B. At the sole discretion of the Commissioner and law enforcement officials, including but not limited to the Chicago Police Department, Cook County Sheriffs Office, Illinois State Police or any other municipal, state or federal law enforcement agency, all vehicles (and their contents) are subject to interior and/or exterior inspection entering or exiting DOWM facilities, and all employees and other individuals entering or exiting DOWM facilities are subject to searches. Vehicles may not contain any materials other than those needed for the project. The Commissioner may deny access to any vehicle or individual in his sole discretion.

C. All individuals operating a vehicle on DOWM property must be familiar and comply with motor driving regulations and procedures of the State of Illinois and the City of Chicago. The operator must be in possession of a valid, state-issued Motor Vehicle Operator's Driver License.

D. All required City stickers and State Vehicle Inspection stickers must be valid.

E. Individuals must remain within their assigned area and haul routes unless otherwise instructed by the City.

F. Access to the Work sites will be as shown or designated on the Contract Documents Drawings or determined by the Commissioner. The Commissioner may deny access when, in his sole discretion, the vehicle or individual poses some security risk to DOWM.

3.6.4.4. Gates and Fences

Whenever the Contractor receives permission to enter DOWM property in areas that are exit/entrance points not secured by the City, the Contractor may be required to provide gates that comply with DOWM design and construction standards. Contractor must provide a licensed and bonded security guard, subject to the Commissioner's approval and armed as deemed necessary by the Commissioner, at the gates when the gates are in use. DOWM Security will provide the locks. Failure to provide and maintain the necessary security will result in an immediate closure by DOWM personnel of the point of access.

Stockpiling materials and parking of equipment or vehicles near DOWM security fencing is prohibited.

Any security fencing, gates, or alarms damaged by the Contractor or its Subcontractors must be manned by a licensed and bonded security guard of the Contractor at Contractor's expense until the damaged items are restored. Contractor must restore them to their original condition within an eight (8) hour period from the time of notice given by the Commissioner.

Temporary removal of any security fencing, gate or alarm to permit construction must be approved by the Commissioner, and Contractor must man the site by a licensed and bonded security guard, approved by and armed as deemed necessary by the Commissioner, at Contractor's expense, on a twenty-four (24) hour basis during the period of temporary removal. Contractor must restore the items removed to their original condition when construction is completed.

3.6.4.5. Hazardous or Illegal Materials

Unauthorized hazardous or illegal materials, including but not limited to hazardous materials as defined in 49 C.F.R. Parts 100-185 (e.g. explosives, oxidizers, radiological materials, infectious

materials), contraband, firearms and other weapons, illegal drugs and drug paraphernalia, may not be taken on DOWM property. Alcoholic beverages are also prohibited.

ARTICLE 4. TERMS FOR SUPPLY CONTRACTS

4.1. Blanket Releases / Purchase Orders

Unless otherwise provided in the Scope of Work and Detailed Specifications, orders for products to be provided under this Contract will be in the form of a written City of Chicago Blanket Release (a.k.a. purchase order, purchase order release, sub-order, or sub-order release) that will be issued by the Department and sent to the Contractor. Blanket Releases will indicate the specification number, Contract/purchase order number, product description, quantities ordered for each line item, unit cost, total cost, shipping address, delivery date, fund chargeable information and other pertinent instructions regarding delivery.

For Blanket Releases issued before a price increase effective date, if this Contract provides for price increases, Contractor must honor Contract prices listed on the Blanket Release, even if the Blanket Release specifies multiple shipments with delivery dates that are scheduled after the effective date of the price increase.

The Contractor must not honor any verbal order(s) or make any deliveries without receipt of a written Blanket Release issued by the Department. Any items provided by the Contractor without a written Blanket Release are made at the Contractor's risk. Consequently, in the event a written Blanket Release is not provided by the City, the Contractor releases the City form any liability whatsoever to pay for any items provided without a written Blanket Release.

4.2. Delivery and Acceptance

4.2.1. Delivery

As stated above, Contractor must not make any deliveries without a written City of Chicago Blanket Release issued by the appropriate department. Upon receipt of a Blanket Release, deliveries must be made to the location(s) listed in the Scope and Detailed Specifications or other location specified by the Commissioner or CPO in the written purchase order. Unless otherwise clearly and specifically provided in the Detailed Specifications or the written purchase order, all deliveries will be F.O.B. destination (City of Chicago).

Contractor understands and agrees that the initial acceptance of any delivery will not be considered as a waiver of any provision of this Contract and will not relieve the Contractor of its obligation to supply satisfactory goods which conform to the Contract.

4.2.2. Inspection and Defects

The City will have the right to inspect any products to be provided by Contractor under this Contract. Upon delivery of the products, the City will conduct an in-depth initial visual examination solely for the purpose of identifying gross and obvious damage, defects or non-conformance with specifications. The Contractor's representative may be present for the initial examinations. This does not limit the City's right to conduct subsequent inspection of the products delivered.

If defects or omissions are discovered in the initial or subsequent inspections, the City may exercise any or all of the following remedies, in addition to any other remedies specified in this agreement:

- Refuse acceptance of any/all units.
- Require the Contractor to make corrections at Contractor's expense, either on-site or at Contractor's place of business, whether or not the term of the Contract has expired.
- Require the Contractor to replace the units at Contractor's expense.
- Require the Contractor to reimburse the City for the cost of inspection.

Any and all labor and materials which may be required to correct or replace damaged, defective or non-conforming products must be provided by the Contractor at no cost to the City. The Contractor must correct or replace the incorrect, damaged or defective or non-conforming items within seven (7) business days of the return unless otherwise provided in the Detailed Specifications. The City of Chicago will not be subject to restocking charges.

Failure to correct or replace unacceptable goods, or repeated delivery of unacceptable goods, will be an event of default under this Contract.

4.2.3. Shipment errors
The Contractor will be responsible for any errors in shipments that are the fault of the Contractor. The Contractor must make arrangements with their common carrier or company personnel to pick-up, at Contractor's expense, any un-ordered products, over-shipments of product, or products that otherwise do not comply with the applicable purchase order within forty-eight (48) hours after notification by the Department. Contractor must promptly supply any under-shipment of product promptly after notification by the Department.

The City of Chicago will not be subject to restocking charges due to shipment errors.

Repeated errors in shipments will be an event of default under this Contract.

4.2.4. Acceptance
Products provided under this Contract will be deemed to be accepted by the City thirty days after delivery, unless previously rejected. The City may revoke acceptance if items are later discovered to be non-conforming or if the non-conformity is not remedied by the Contractor as expected by the City, even if the value of the item(s) is not substantially decreased due to the non-conformity.

4.3. Centralized Invoice Processing
Unless stated otherwise in the Detailed Specifications, this Contract is subject to Centralized Invoice Processing ("CIP"). Invoices must be submitted directly to the Comptroller's office by US Postal Service mail to the following address as appropriate:

Invoices for any City department other than the Department of Aviation:

Invoices
City of Chicago, Office of the City Comptroller
121 N. LaSalle St., Room 700, City Hall
Chicago, IL 60602

Invoices for the Department of Aviation:

Chicago Department of Aviation
10510 W. Zemke Blvd.
P.O. Box 66142
Chicago, IL 60666
Attn: Finance Department

OR

Invoices for any department, including Aviation, may be submitted via email to: invoices@cityofchicago.org with the word "INVOICE" in the subject line.

All invoices must be signed, marked "original," and include the following information or payment will be delayed:

- Invoice number and date
- Contract/Purchase Order number
- Blanket Release number (if applicable)
- Vendor name and/or number
- Remittance address
- Name of City Department that ordered the goods or services
- Name and phone number of your contact at the ordering department
- Invoice quantities, commodity codes, description of deliverable(s)
- Amount due

- Receipt number (provided by the ordering department after delivery of goods/services)

Invoice quantities, service description, unit of measure, pricing and/or catalog information must correspond to the terms of the Bid Page(s).

If applicable, if invoicing Price List/Catalog items, indicate Price List/Catalog number, item number, Price List/Catalog date, and Price List/Catalog page number on the invoice.

Invoices for over-shipments or items with price/wage escalations will be rejected unless the Contract includes a provision for such an adjustment.

Freight, handling and shipping costs are not to be invoiced; deliveries are to be made F.O.B., City of Chicago. The City of Chicago is exempt from paying State of Illinois sales tax and Federal excise taxes on purchases.

4.4. Unspecified Items

Any Commodity not specifically listed herein may be added to this Contract if it falls within the same general category of items/services already specified in the Contract. Pursuant to 2-92-646 of the Municipal Code of Chicago, the lifetime, aggregate value of the City's purchase of any items/services added to this Contract pursuant to this provision must not exceed ten percent (10%) of the original value of the Contract.

The Department will notify the Contractor in writing of the unspecified items which are necessary and request a written price proposal for the addition of the item(s) to this Contract under the same terms and conditions of the original Contract. Upon receipt of a price proposal, the Department will forward the request and proposal to the Chief Procurement Officer for approval to add the unspecified item(s) to the Contract. Such item(s) may be added to the Contract only if the prices are competitive with current market prices and said items are approved by the Chief Procurement Officer in writing. The Chief Procurement Officer reserves the right to seek competitive pricing information on said item(s) from other suppliers and to procure such item(s) in a manner that serves the best interest of the City.

Any such unspecified item(s) delivered by the Contractor, without a written approval and modification of the Contract signed by the Chief Procurement Officer, are delivered entirely at the Contractor's risk. Consequently, the Contractor hereby releases the City from any liability whatsoever to pay for any items delivered prior to the Contractor's receipt of fully signed Contract modification approving the unspecified item(s).

4.5. Quality, Source, Substitution, and Labeling

4.5.1. Quality

Product must conform to any industry standards specified in the Detailed Specifications as well as the best industry practices and standards with respect to quality of materials and workmanship. Unless otherwise specified in the Detailed Specifications, all products provided must be new and in conformance with the Contract and acceptable in every detail to the Commissioner. If requested, the Contractor must certify to the Commissioner that all products to be provided comply with all Contract requirements. Only products which conform to the quality requirements of the Contract will be accepted.

4.5.2. Source

The Contractor must promptly notify the Commissioner upon request, of the source (or sources) from which the Contractor expects to obtain the products. The source(s) of supply, including the manufacturer, must not be debarred from contracting or otherwise be ineligible to contract with the City.

If sources are found to be unacceptable at any time or fail to be the source of products satisfactory to the Commissioner, the Contractor must furnish products from other, acceptable sources.

4.5.3. Substitution

In cases of product unavailability or other conditions beyond the control of the Contractor arising after contract award, Contractor may request to provide substitutes for the products specified in the Detailed Specifications.

Each request for substitution must be submitted separately and must include sufficient information that, in the Commissioner's sole judgment and discretion, enables the Commissioner to determine the suitability of the proposed substitute for the specified product. The information must include:

(a) Product identification, including manufacturer's name and address.

(b) Manufacturer's literature including:

i) Product description

ii) Reference standards

iii) Performance and test data

(c) Samples, as applicable. Samples must be at no charge and will not be returned.

(d) Name and address of similar user of the product and date of usage.

(e) Itemized comparison of the proposed alternate item with specified item listing significant variations.

The Contractor warrants and represents that in making a formal request for substitution that: (1) the proposed substitution is equivalent to or superior in all respects to the product specified; (2) the same warranties and guarantees will be provided for the substitute as for the product specified. Any additional cost, or any loss or damage, arising from the substitution of any products for those specified shall be borne by the Contractor.

The Commissioner may, in his or her sole discretion, accept an alternate product for a specified product, provided the alternate product is, in the Commissioner's sole opinion, the equivalent of the product specified in the Detailed Specifications. The Commissioner will not entertain more than one request for substitution per year except in cases of product unavailability or other conditions beyond the control of the Contractor.

4.5.4. Testing Laboratory Labels
All products containing electrical wiring must conform to the City Electrical Code, which requires such products to be approved and so labeled by a testing laboratory acceptable under the Chicago Electrical Code Section 14-64-010.

4.6. Manufacturer's Warranty & Product Information
Contractor must have, and must demonstrate upon request or as required by the Detailed Specifications, that it has authorization to transfer product warranties to the City of Chicago. The Contractor is required to provide and transfer all documentation issued by the manufacturer for the items to be provided under this agreement. This includes the manufacturer's genuine parts/product information, recall notices, manuals, licenses, assemblies and/or accessories as supplied by the original equipment manufacturer (O.E.M.).

The Contractor must provide the original product warranty and related services for the products provided under this Contract in accordance with the standard warranty regularly provided by the OEM for that product, unless the Detailed Specifications call for a different warranty.

4.7. Contractor's Warranties
The Contractor warrants that the title to the products to be provided under this agreement is good and its transfer is rightful, and that the products will be delivered to the City free from all liens or any security interest or other encumbrance.

In addition to all warranties that may be implied by law, the items shall conform to specifications, drawings, and other requirements in the Detailed Specifications and shall be free from defects in materials and workmanship. Contractor also warrants that they will be free from defects in design except to the extent that they are non-standard products manufactured pursuant to detailed designs furnished by the City and the defect is in the portion of the design furnished by the City. Such warranties, including warranties implied by law, shall run to City, its successors, assigns, customers, and to users of the goods.

ARTICLE 5. SCOPE OF WORK AND DETAILED SPECIFICATIONS

5.1. General

The Contractor must furnish and deliver Helix Foundation Pole Bases and Helix Foundation Pole Bases Cable Anti-Theft Devices as specified, F.O.B., City of Chicago, Department of Transportation, Division of Electrical Operations, 2451 South Ashland Avenue, Chicago, Illinois 60608, or any other location within the City all in accordance with the General terms and Conditions, Special Conditions and Detailed Specification of this contract. Contractor's products and services must adhere to the standards and requirements set forth in the Detailed Specifications in Exhibit 2 and Drawings in Exhibit 3.

5.2. Intent

The intent of this requirement is to furnish the City of Chicago with Helix Foundation Pole Bases and Helix Foundation Pole Bases Cable Anti-Theft Devices to secure street light poles to the ground. The foundation bases will be used instead of concrete to securely hold the street light in place.

5.3. Basis of Award

In the event that a contract is awarded pursuant to this specification, the Chief Procurement Officer will award such contract to the lowest responsive and responsible bidder as determined by the bid price, including any statutorily mandated adjustments to the bid price as applicable, meeting the terms and conditions set out in the Bid Documents.

Contractor's bid pricing must incorporate any peripheral costs including, but not limited to, the costs of products and/or services, delivery/transportation charges, training, materials, labor, insurance, applicable taxes, warranty, overhead and profit, etc. that are required by this Contract.

The Chief Procurement Officer reserves the right to award a contract, or reject any/all bids, when in the opinion of the Chief Procurement Officer the best interests of the City would be served thereby.

5.4. Funding

The source of funds for payments under this Contract is Fund number 015-0400-0842015-0140-220140. Funding for this Contract is subject to the availability of funds and their appropriation by the City Council of the City.

5.5. Technical Requirements

5.5.1. Specifications

LINE 1: POLE BASES, HELIX FOUNDATION - 5 FOOT BASE WITH A 10 INCH BOLT CIRCLE, PER DRAWING 936. (DRAWING ATTACHED IN EXHIBIT 3).

LINE 2: POLE BASES, HELIX FOUNDATION - 5 FOOT BASE WITH A 13 INCH BOLT CIRCLE, PER DRAWING 936. (DRAWING ATTACHED IN EXHIBIT 3).

LINE 3: POLE BASES, HELIX FOUNDATION -7 FOOT BASE WITH A 10 INCH TO 15 INCH BOLT CIRCLE, PER DRAWING 936. (DRAWING ATTACHED IN EXHIBIT 3).

LINE 4: POLE BASES, HELIX FOUNDATION, CABLE ANTI-THEFT DEVICE - 10 INCH BOLT CIRCLE, PER DRAWING 982. (DRAWING ATTACHED IN EXHIBIT 3).

LINE 5: POLE BASES, HELIX FOUNDATION, CABLE ANTI-THEFT DEVICE - 15 INCH BOLT CIRCLE, PER DRAWING 982. (DRAWING ATTACHED IN EXHIBIT 3).

SEE EXHIBIT 2: SPECIFICATION NUMBERS #1526 AND #1593.

SEE EXHIBIT 3: DRAWINGS 936 & 982.

5.5.2. Material

Foundation shaft must have .250' wall and be 8-5/8" in outside diameter. Base plat must be 1" structural steel, ASTM Grade A36 or better. Helical screw plate must be fabricated from a 14" diameter circle formed to a 3" pitch helix form.

Material must be ASTM A36 structural steel or better, with a minimum 3/8" thickness at least equal to the wall thickness of the foundation shaft.

5.5.3. General Construction
The Specification #1526 attached in Exhibit 2 covers the requirements for Helix Foundation Pole Bases Line Items 1, 2, and 3. These foundations may be used to support street light poles for both residential and arterial streets. They may also be used to support aluminum traffic signal posts.

The Specification# 1593 attached in Exhibit 2 covers the requirements for the Helix Foundation Cable Anti-Theft Device, Line items 4 and 5. The cable anti-theft devices are to be used with steel helix foundation with either ten inch diameter bolt circles or fifteen Inch diameter bolt circles. The device will secure the cable so as to prevent removal of the cable without removing the pole first. The Helix Foundation Pole Bases and Helix Foundation Pole Bases Cable Anti-Theft Devices furnished must be the manufacturer's latest models. Each complete Helix Foundation Pole Base must conform to the best practices known to the trade in strength, quality of material and workmanship and be subject to this specification in full. The specification must be construed as minimum. Should the manufacturer's current published data or specification exceed this, it will be considered minimum and must be furnished. The City reserves the right to waive or take exception to this requirement if it is determined to be to the City's advantage or best interest.

5.5.4. Construction
All welds must be continuous and not less than W' fillet welds. Foundation shaft must extend into 1" base plate and be circumferentially welded top and bottom. Top surface of base must be flat and there must be no sharp edges where power cable passes through top construction.

Base plate must be clearly marked to indicate cable way origination. Pilot must extend 6" below the screw plate. The leading end must be finished to a diamond, chisel or round pointed end. Pilot bar must be welded concentric with the axis for the helix foundation.

Finished helix foundation must be capable of withstanding 10,000 lbs. of installation torque applied about the axis of the foundation.

The 3" x 12" cable ways must be on opposite sides of the foundation shaft directly below the base plate orientation markings.

After fabrication, the complete helix foundation assembly must be hot dipped galvanized in accordance with provisions of ASTM A123, Grade B, which requires a zinc coating equal to 2 oz. per square foot of fabricated product. No touch up using cold zinc or cold galvanize coating is acceptable.

Dimensions must be as indicated on the accompanying "Helix Foundation" drawing No. 936.

5.5.5. Samples
In order to determine that the proposed Helix Foundation Pole Bases and Helix Foundation Pole Bases Cable Anti-Theft Devices conform to this specification, the City of Chicago reserves the right to test and/or Inspect bidder's products. Other tests and measurements may also be performed throughout the contract term, as determined by the City.

For bid evaluation purposes, the bidder must furnish and deliver, upon request by the Chief Procurement Officer, sample(s) consisting of one (1) complete foundation of #1526 in each size Pole Bases and one complete device of the manufacture device #1593 of the proposed Helix Foundation Pole Bases and Cable Anti-Theft Device within fifteen (15) calendar days from the receipt of notice. All samples must be delivered at no charge (F.O.B.), City of Chicago, Bureau of Electricity, 2451 S. Ashland, Chicago, Illinois 60608. All samples must be tagged or labeled with the company name, address and City specification number. Failure to furnish said samples within this time period will be cause for rejection of the bid for being non-responsive to this requirement.

The City will not be liable for the condition of the sample if the bidder requests return of the sample. The cost to furnish and deliver the sample(s) will be borne by the bidder.

5.5.6. Materials Inspection and Responsibility
The City, by its Chief Procurement Office, will have a right to inspect any material to be used in carrying out this contract.

The City does not assume any responsibility for the availability of any controlled materials or other materials and equipment required under this contract.

Materials, components or completed work not complying therewith may be rejected by the Chief Procurement Officer and must be replaced by the Contractor at no cost to the City.

Any materials or components rejected must be removed within a reasonable time from the premises of the City at the entire expense of the Contractor, after written notice has been mailed by the City to the Contractor that such materials or components have been rejected.

5.5.7. Standard Helix Pole Foundation Bases
Experimental Helix Foundation Pole Bases and Helix Cable Anti-Theft Devices will not be acceptable. Helix Foundation Pole Bases which are not produced by regular production methods and/or which have not been offered for sale through accepted industry trade channels for at least one (1) year prior to the offering of this bid will be considered experimental. The City reserves the right to waive or take exception to this requirement if it is determined to be to the City's advantage or best interests.

The Contractor must furnish evidence upon request that the item to be furnished has been commercially available through that manufacturer to the trade for a period of not less than one (1) year and has been fully field tested to the satisfaction of the Chief Procurement Officer.

5.6. Price Adjustment
Quoted prices will remain fixed throughout the first twelve (12) calendar months of the Contract term. Beginning on the date after the initial twelve (12) month term, and for each twelve (12) month anniversary thereafter, subject to acceptable performance by the Contractor and contingent upon the appropriation of sufficient funds annual price adjustments of the Contract pricing may be made after receipt of written request from the Contractor showing cause substantiating the need for the increase, made no later than thirty (30) calendar days after the expiration of each such twelve (12) month period. If Contractor does not request a price adjustment within such thirty (30) calendar day period, Contractor will not be entitled to a price adjustment for the upcoming year. Contract pricing adjustments will be calculated as outlined below.

Annual requests for price adjustments will reference the Producer Price Index (PPI) for "Metals and Metal Products, Structural, Architectural, Pre-Engineered Metal Products", Series ID: WPS1074, not seasonally adjusted, as it appears in the periodical Producer Price Indices published by the U.S. Department of Labor, Bureau of Labor Statistics. This index can currently be found on the internet at http://data.bis.gov/PDQ/outside.jsp?survey=wp although this site's URL is subject to change. (Select commodity data, then select Group "Metals and Metal Products" and Item "Structural, Architectural, Pre-Engineered Metal Products", and "Get Data".)

The adjusted Contract price will be determined by performing the following calculation: The original Contract price(s) will be multiplied by the quotient, and then rounded to two (2) decimal places to calculate the adjusted Contract price(s). The quotient will be calculated by dividing the comparison index value by the average index value of the last twelve (12) months of the Contract period.

The comparison value for the first allowable price increase will be the index value at the time of Contract award. The comparison value for the second allowable price increase will be the index value of the one (1) year anniversary date of the Contract award.

Adjusted price(s) may be higher or lower than the original Contract pricing, as dictated by the applicable index values. Any price adjustments requested in subsequent years of the agreement will be calculated in the same manner.

All price adjustment calculations will be based upon the latest version of the PPI available on the eighteenth (18th) day of the month following the anniversary of the Contract. The effective date of an adjustment will be the twentieth (20th) day of the month following the month in which the adjustment is requested.

If Producer Price Index data are not available for any month of the final twelve (12) full months of the annual Contract period, the PPI data for the most recent twelve (12) full months preceding the anniversary of the Contract will be used in computing the price adjustment.

5.7. Inventory/Lead Time

The Contractor must maintain an inventory of sufficient diversity and quantity as to ensure the delivery of any Helix Foundation Pole Bases listed in the Proposal that is ordered by the City within ten (10) calendar days after receipt of a City department's order. In lieu of maintaining the inventory, the Contractor must be able to arrange such prompt delivery.

Repeated failures of the Contractor to meet the above stated delivery requirements, may be used by the City as grounds for the termination of this Contract, and may further affect the Contractor's eligibility for future Contract awards.

5.8. No Stated Goals for MBE/WBE Participation

It is the policy of the City of Chicago that local businesses certified as Minority-owned Business Enterprises (MBE) and Women-owned Business Enterprises (WBE) in accordance with Section 2-92-450 of the Municipal Code of Chicago and Regulations Governing Certification of Minority and Women-owned Businesses shall have the maximum opportunity to participate fully in the performance of all City contracts.

The Chief Procurement Officer has determined that the nature of the goods and/or services to be provided under this Contract is such that neither direct nor indirect subcontracting opportunities will be practicable or cost-effective. Therefore, there will be no stated goals for MBE/WBE participation in this Contract. This determination is being made pursuant to Section 2-92-450 of the Municipal Code of Chicago.

5.9. Additional Requirements

5.9.1. Contract Term

5.9.1.1. Initial Term

The Initial Term for this Contract will be sixty (60) months, unless terminated earlier or extended pursuant to the terms of this contract.

The City will establish the start and expiration dates at the time of formal award and release of this contract.

The start date will be no later than the first day of the succeeding month from the date shown as the Contract Award and Release Date on the Proposal Acceptance Page.

5.9.1.2. Term Extension

The City has the option to unilaterally extend the term of this Contract following the expiration of the Initial Term, for up to thirty-six (36) months, subject to acceptable performance by the Contractor and contingent upon the appropriation of sufficient funds. The option may be exercised as a single thirty-six month extension or as up to three separate extensions, each with a term of no less than twelve months.

No less than sixty (60) calendar days before the expiration of the initial term, or if previously extended, the expiration of the term as extended, the Chief Procurement Officer will give the Contractor notice of the City's intent to exercise its option to renew the Contract. The date on which the Chief Procurement Officer gives notice is the date the notice is mailed, if it is mailed, or the date the notice is delivered, if sent by courier or messenger service.

CITY OF CHICAGO
Department of Procurement Services
Jamie L. Rhee, Chief Procurement Officer
121 North LaSalle Street, Room 806
Chicago, Illinois 60602-1284

Fax: 312-744-3281

MBE & WBE SPECIAL CONDITIONS FOR COMMODITIES OR SERVICES CONTRACTS

ARTICLE 6. SPECIAL CONDITIONS REGARDING MINORITY BUSINESS ENTERPRISE COMMITMENT AND WOMEN BUSINESS ENTERPRISE COMMITMENT FOR COMMODITIES OR SERVICES

6.1. Policy and Terms

It is the policy of the City of Chicago that Local Businesses certified as Minority Owned Business Enterprises (MBE) and Women Owned Business Enterprises (WBE) in accordance with Section 2-92-420 et seq. of the Municipal Code of Chicago and Regulations Governing Certification of Minority and Women-owned Businesses and all other Regulations promulgated under the aforementioned sections of the Municipal Code, as well as MBEs and WBEs certified by Cook County, Illinois, will have full and fair opportunities to participate fully in the performance of this contract. Therefore, the Contractor will not discriminate against any person or business on the basis of race, color, sex, gender identity, age, religion, disability, national origin, ancestry, sexual orientation, marital status, parental status, military discharge status or source of income and will take affirmative action to ensure that women and minority businesses will have the maximum opportunity to compete for and perform subcontracts for supplies or services.

Pursuant to Section 2-92-430 of the Municipal Code of Chicago, the Chief Procurement Officer has established a goal of awarding not less than 25% of the annual dollar value of all non-construction contracts to certified MBEs and 5% of the annual dollar value of all non-construction contracts to certified WBEs.

Accordingly, the Contractor commits to make Good Faith Efforts to expend at least the following percentages of the total contract price (inclusive of any and all modifications and amendments), if awarded, for contract participation by MBEs and WBEs:

MBE Percentage	WBE Percentage
0%	0%

This commitment is met by the Contractor's status as a MBE or WBE, or by a joint venture with one or more MBEs or WBEs as prime contractor (to the extent of the MBE or WBE participation in such joint venture), or by subcontracting a portion of the work to one or more MBEs or WBEs, or by the purchase of materials used in the performance of the contract from one or more MBEs or WBEs, or by the indirect participation of MBEs or WBEs in other aspects of the Contractor's business (but no dollar of such indirect MBE or WBE participation will be credited more than once against a Contractor's MBE or WBE commitment with respect to all government Contracts of such Contractor), or by any combination of the foregoing.

Note: MBE/WBE participation goals are separate and those businesses certified with the City of Chicago as both MBE and WBE may only be listed on a bidder's compliance plan as either a MBE or a WBE, but not both to demonstrate compliance with the Contract Specific Goals.

As noted above, the Contractor may meet all or part of this commitment by contracting with MBEs or WBEs for the provision of goods or services not directly related to the performance of this Contract. However, in determining the manner of MBE/WBE participation, the Contractor will first consider involvement of MBEs/WBEs as joint venture partners, subcontractors, and suppliers of goods and services directly related to the performance of this Contract. In appropriate cases, the Chief Procurement Officer will require the

Contractor to demonstrate the specific efforts undertaken by it to involve MBEs and WBEs directly in the performance of this Contract.

The Contractor also may meet all or part of this commitment through credits received pursuant to Section 2-92-530 of the Municipal Code of Chicago for the voluntary use of MBEs or WBEs in private sector contracts.

Pursuant to 2-92-535, the prime contractor may apply be awarded an additional 0.333 percent credit, up to a maximum of a total of 5 percent additional credit, for every 1 percent of the value of a contract self-performed by MBEs or WBEs, or combination thereof, that have entered into a mentor agreement with the contractor. This up to 5% may be applied to the Contract Specific Goals, or it may be in addition to the Contract Specific Goals.

6.2. Definitions

"Area of Specialty" means the description of an MBE or WBE firm's business which has been determined by the Chief Procurement Officer to be most reflective of the MBE or WBE firm's claimed specialty or expertise. Each MBE/WBE letter of certification contains a description of the firm's Area of Specialty. This information is also contained in the Directory (defined below). Credit toward this Contract's MBE and WBE participation goals shall be limited to the participation of firms performing within their Area of Specialty.

> **NOTICE:** *The City of Chicago does not make any representation concerning the ability of any MBE/WBE to perform work within their Area of Specialty. It is the responsibility of all contractors to determine the capability and capacity of MBEs/WBEs to satisfactorily perform the work proposed.*

"B.E.P.D." means an entity certified as a Business enterprise owned or operated by people with disabilities as defined in MCC Section 2-92-586.

"Bid" means a bid, proposal, or submittal detailing a description of the services or work to be provided by the contractor in response to a bid solicitation, request for proposal, request for qualification of task order request (issued in accordance with the Master Consulting Agreement) that is issued by the City.

"Bidder" means any person or business entity that submits a bid, proposal, qualification or submittal that seeks to enter into a contract with the City, and includes all partners, affiliates and joint ventures of such person or entity.

"Broker" means a person or entity that fills orders by purchasing or receiving supplies from a third party supplier rather than out of its own existing inventory and provides no commercially useful function other than acting as a conduit between his or her supplier and his or her customer.

"Chief Procurement Officer" or "CPO" means the chief procurement officer of the City of Chicago or his or her designee.

"Commercially Useful Function" means responsibility for the execution of a distinct element of the work of the contract, which is carried out by actually performing, managing, and supervising the work involved, evidencing the responsibilities and risks of a business owner such as negotiating the terms of (sub)contracts, taking on a financial risk commensurate with the contract or its subcontract, responsibility for acquiring the appropriate lines of credit and/or loans, or fulfilling responsibilities as a joint venture partner as described in the joint venture agreement.

"Contract Specific Goals" means the subcontracting goals for MBE and WBE participation established for a particular contract.

"Contractor" means any person or business entity that has entered into a contract with the City as described herein, and includes all partners, affiliates, and joint ventures of such person or entity.

"Direct Participation" the value of payments made to MBE or WBE firms for work that is performed in their Area of Specialty directly related to the performance of the subject matter of the Contract will count as Direct Participation toward the Contract Specific Goals.

"Directory" means the Directory of Certified "Minority Business Enterprises" and "Women Business Enterprises" maintained and published by the City of Chicago. The Directory identifies firms that have been certified as MBEs and WBEs, and includes both the date of their last certification and the area of specialty in which they have been certified. Contractors are responsible for verifying the current certification status of all proposed MBE, and WBE firms.

"Good Faith Efforts" means actions undertaken by a bidder or contractor to achieve a Contract Specific Goal that the CPO or his or her designee has determined, by their scope, intensity, and appropriateness to the objective, can reasonably be expected to fulfill the program's requirements.

"Indirect Participation" refers to the value of payments made to MBE or WBE firms for work that is done in their Area of Specialty related to other aspects of the Contractor's business. (Note: no dollar of such indirect MBE or WBE participation shall be credited more than once against a contractor's MBE or WBE commitment with respect to all government contracts held by that contractor.)

"Joint venture" means an association of a MBE or WBE firm and one or more other firms to carry out a single, for-profit business enterprise, for which each joint venture partner contributes property, capital, efforts, skills and knowledge, and in which the MBE or WBE is responsible for a distinct, clearly defined portion of the work of the contract and whose share in the capital contribution, control, management, risks, and profits of the joint venture are commensurate with its ownership interest.

"Mentor-Protégé Agreement" means an agreement between a prime and MBE or WBE subcontractor pursuant to MCC 2-92-535, that is approved by the City of Chicago and complies with all requirements of MCC 2-92-535 and any rules and regulations promulgated by the Chief Procurement Officer.

"Minority Owned Business Enterprise" or **"MBE"** means a firm awarded certification as a minority owned and controlled business in accordance with City Ordinances and Regulations as well as a firm awarded certification as a minority owned and controlled business by Cook County, Illinois. However, it does not mean a firm that has been found ineligible or which has been decertified by the City or Cook County.

"Municipal Code of Chicago" or **"MCC"** means the Municipal Code of the City of Chicago.

"Supplier" or **"Distributor"** refers to a company that owns, operates, or maintains a store, warehouse or other establishment in which materials, supplies, articles or equipment are bought, kept in stock and regularly sold or leased to the public in the usual course of business. A regular distributor or supplier is a firm that owns, operates, or maintains a store, warehouse, or other establishment in which the materials or supplies required for performance of a contract are bought, kept in stock, and regularly sold to the public in the usual course of business. To be a regular distributor the firm must engage in, as its principal business and in its own name, the purchase and sale of the products in question. A regular distributor in such bulk items as steel, cement, gravel, stone, and petroleum products need not keep such products in stock if it owns or operates distribution equipment.

"Women Owned Business Enterprise" or **"WBE"** means a firm awarded certification as a women owned and controlled business in accordance with City Ordinances and Regulations as well as a firm awarded certification as a women owned business by Cook County, Illinois. However, it does not mean a firm that has been found ineligible or which has been decertified by the City or Cook County.

6.3. Joint Ventures

The formation of joint ventures to provide MBEs and WBEs with capacity and experience at the prime contracting level, and thereby meet Contract Specific Goals (in whole or in part) is encouraged. A joint venture may consist of any combination of MBEs, WBEs, and non-certified firms as long as one member is an MBE or WBE.

a. The joint venture may be eligible for credit towards the Contract Specific Goals only if:

   i. The MBE or WBE joint venture partner's share in the capital contribution, control, management, risks and profits of the joint venture is equal to its ownership interest;

ii. The MBE or WBE joint venture partner is responsible for a distinct, clearly defined portion of the requirements of the contract for which it is at risk;

iii. Each joint venture partner executes the bid to the City; and

iv. The joint venture partners have entered into a written agreement specifying the terms and conditions of the relationship between the partners and their relationship and responsibilities to the contract, and all such terms and conditions are in accordance with the conditions set forth in Items i, ii, and iii above in this Paragraph a.

b. The Chief Procurement Officer shall evaluate the proposed joint venture agreement, the Schedule B submitted on behalf of the proposed joint venture, and all related documents to determine whether these requirements have been satisfied. The Chief Procurement Officer shall also consider the record of the joint venture partners on other City of Chicago contracts. The decision of the Chief Procurement Officer regarding the eligibility of the joint venture for credit towards meeting the Contract Specific Goals, and the portion of those goals met by the joint venture, shall be final.

The joint venture may receive MBE or WBE credit for work performed by the MBE or WBE joint venture partner(s) equal to the value of work performed by the MBE or WBE with its own forces for a distinct, clearly defined portion of the work.

Additionally, if employees of the joint venture entity itself (as opposed to employees of the MBE or WBE partner) perform the work, then the value of the work may be counted toward the Contract Specific Goals at a rate equal to the MBE or WBE firm's percentage of participation in the joint venture as described in Schedule B.

The Chief Procurement Officer may also count the dollar value of work subcontracted to other MBEs and WBEs. Work performed by the forces of a non-certified joint venture partner shall not be counted toward the Contract Specific Goals.

c. **Schedule B: MBE/WBE Affidavit of Joint Venture**

Where the bidder's Compliance Plan includes the participation of any MBE or WBE as a joint venture partner, the bidder must submit with its bid a Schedule B and the proposed joint venture agreement. These documents must both clearly evidence that the MBE or WBE joint venture partner(s) will be responsible for a clearly defined portion of the work to be performed, and that the MBE's or WBE's responsibilities and risks are proportionate to its ownership percentage. The proposed joint venture agreement must include specific details related to:

i. The parties' contributions of capital, personnel, and equipment and share of the costs of insurance and bonding;

ii. Work items to be performed by the MBE's or WBE's own forces and/or work to be performed by employees of the newly formed joint venture entity;

iii. Work items to be performed under the supervision of the MBE or WBE joint venture partner; and

iv. The MBE's or WBE's commitment of management, supervisory, and operative personnel to the performance of the contract.

NOTE: Vague, general descriptions of the responsibilities of the MBE or WBE joint venture partner do not provide any basis for awarding credit. For example, descriptions such as "participate in the budgeting process," "assist with hiring," or "work with managers to improve customer service" do not identify distinct, clearly defined portions of the work. Roles assigned should require activities that are performed on a regular, recurring basis rather than as needed. The roles must also be pertinent to the nature of the business for which credit is being sought. For instance, if the scope of work required by the City entails the delivery of goods or services to various sites in the City, stating that the MBE or WBE joint venture partner will be

responsible for the performance of all routine maintenance and all repairs required to the vehicles used to deliver such goods or services is pertinent to the nature of the business for which credit is being sought.

6.4. Counting MBE/WBE Participation Toward the Contract Specific Goals

Refer to this section when preparing the MBE/WBE compliance plan and completing Schedule D-1 for guidance on what value of the participation by MBEs and WBEs will be counted toward the stated Contract Specific Goals. The "Percent Amount of Participation" depends on whether and with whom a MBE or WBE subcontracts out any portion of its work and other factors.

Firms that are certified as both MBE and WBE may only be listed on a bidder's compliance plan as either a MBE or a WBE to demonstrate compliance with the Contract Specific Goals. For example, a firm that is certified as both a MBE and a WBE may only be listed on the bidder's compliance plan under one of the categories, but not both. Only Payments made to MBE and WBE firms that meet BOTH the Commercially Useful Function and Area of Specialty requirements above will be counted toward the Contract Specific Goals.

a. Only expenditures to firms that <u>perform a Commercially Useful Function as defined above may count toward the Contract Specific Goals</u>.

   i. The CPO will determine whether a firm is performing a commercially useful function by evaluating the amount of work subcontracted, whether the amount the firm is to be paid under the contract is commensurate with the work it is actually performing and the credit claimed for its performance of the work, industry practices, and other relevant factors.

   ii. A MBE or WBE does not perform a commercially useful function if its participation is only required to receive payments in order to obtain the appearance of MBE or WBE participation. The CPO may examine similar commercial transactions, particularly those in which MBEs or WBEs do not participate, to determine whether non MBE and non WBE firms perform the same function in the marketplace to make a determination.

   iii. Indications that a subcontractor is not performing a commercially useful function include, but are not limited to, labor shifting and equipment sharing or leasing arrangements with the prime contractor or a first tier subcontractor.

b. Only the value of the dollars paid to the MBE or WBE firm <u>for work that it performs in its Area of Specialty</u> in which it is certified counts toward the Contract Specific Goals.

c. <u>For maintenance, installation, repairs or inspection, or professional services, if the MBE or WBE performs the work itself</u>: 100% of the value of work actually performed by the MBE's or WBE's own forces shall be counted toward the Contract Specific Goals, including the cost of supplies and materials purchased or equipment leased by the MBE or WBE from third parties or second tier subcontractors in order to perform its (sub)contract with its own forces (except supplies and equipment the MBE or WBE subcontractor purchases or leases from the prime contractor or its affiliate). 0% of the value of work at the project site that a MBE or WBE subcontracts to a non-certified firm counts toward the Contract Specific Goals.

d. <u>If the MBE or WBE is a manufacturer</u>: 100% of expenditures to a MBE or WBE manufacturer for items needed for the Contract shall be counted toward the Contract Specific Goals. A manufacturer is a firm that operates or maintains a factory or establishment that produces on the premises the materials or supplies obtained by the bidder or contractor.

e. <u>If the MBE or WBE is a distributor or supplier</u>: 60% of expenditures for materials and supplies purchased from a MBE or WBE that is certified as a regular dealer or supplier shall be counted toward the Contract Specific Goals.

f. <u>If the MBE or WBE is a broker</u>:

   i. Zero percent (0%) of expenditures paid to brokers will be counted toward the Contract Specific Goals.

ii. As defined above, Brokers provide no commercially useful function.

g. If the MBE or WBE is a member of the joint venture contractor/bidder:

i. A joint venture may count the portion of the total dollar value of the contract equal to the distinct, clearly defined portion of the work of the contract that the MBE or WBE performs with its own forces toward the Contract Specific Goals; or

ii. If employees of this distinct joint venture entity perform the work then the value of the work may be counted toward the Contract Specific Goals at a rate equal to the MBE or WBE firm's percentage of participation in the joint venture as described in the Schedule B.

iii. A joint venture may also count the dollar value of work subcontracted to other MBEs and WBEs.

h. If the MBE or WBE subcontracts out any of its work:

i. 100% of the value of the work subcontracted to other MBEs or WBEs performing work in its Area of Specialty may be counted toward the Contract Specific Goals.

ii. 0% of the value of work that a MBE or WBE subcontracts to a non-certified firm counts toward the Contract Specific Goals (except as allowed by (c) above).

iii. The fees or commissions charged for providing a bona fide service, such as professional, technical, consulting or managerial services or for providing bonds or insurance and assistance in the procurement of essential personnel, facilities, equipment, materials or supplies required for performance of the Contract, provided that the fee or commission is determined by the Chief Procurement Officer to be reasonable and not excessive as compared with fees customarily allowed for similar services.

iv. The fees charged for delivery of materials and supplies required on a job site (but not the cost of the materials and supplies themselves) when the hauler, trucker, or delivery service is not also the manufacturer of or a regular dealer in the materials and supplies, provided that the fee is determined by the Chief Procurement Officer to be reasonable and not excessive as compared with fees customarily allowed for similar services.

v. The fees or commissions charged for providing any bonds or insurance, but not the cost of the premium itself, specifically required for the performance of the Contract, provided that the fee or commission is determined by the Chief Procurement Officer to be reasonable and not excessive as compared with fees customarily allowed for similar services.

6.5. Regulations Governing Reductions to or Waiver of MBE/WBE Goals

The following Regulations set forth the standards to be used in determining whether or not a reduction or waiver of the MBE/WBE commitment goals of a particular contract is appropriate. If a bidder determines that it is unable to meet the MBE and/or WBE Contract-Specific Goals on a City of Chicago contract, a written request for the reduction or waiver of the commitment must be included in the bid or proposal.

The written request for reduction or waiver from the commitment must be in the form of a signed petition for grant of relief from the MBE/WBE percentages submitted on the bidder's letterhead, and must demonstrate that all required efforts as set forth in this document were taken to secure eligible Minority and Women Business Enterprises to meet the commitments. The Chief Procurement Officer or designee shall determine whether the request for the reduction or waiver will be granted.

A bidder will be considered responsive to the terms and conditions of these Regulations if, at the time of bid, it submits a waiver request and all supporting documentation that adequately addresses the conditions for waiver of MBE/WBE goals, including proof of notification to assist agencies except:

- Bidders responding to Request for Proposals (RFPs) who have been identified as a short listed candidate and/or a prospective awardee will be given a designated time allowance, but no more than fourteen (14) calendar days to submit to the Department of Procurement Services complete documentation that adequately addresses the conditions for waiver described herein; and
- Bidders responding to Request for Information and or Qualifications (RFI/RFQs) deemed by the Chief Procurement Officer or authorized designee to be the most responsive and responsible shall submit documentation that adequately addresses the conditions for waiver described herein during negotiations.

Failure to submit documentation sufficient to support the waiver request will cause the bid/proposal to be found non-responsive by the Chief Procurement Officer, and the bid/proposal will be rejected. In such cases the remedies to be taken by the Chief Procurement Officer, in his or her discretion, may include, but are not limited to, forfeiture of bid deposit; negotiating with the next lowest bidder; or re-advertising the bid/proposal. All bidders must submit all required documents at the time of bid opening to expedite the contract award.

6.5.1. Direct / Indirect Participation

Each of the following elements must be present in order to determine whether or not such a reduction or waiver is appropriate.

a. The bidder has documented the unsuccessful solicitation for either subcontractors or joint venture partners of at least 50% (or at least five when there are more than eleven certified firms in the commodity area) of the appropriate certified MBE/WBE firms to perform any direct or indirect work identified or related to the advertised bid/proposal. Documentation must include but is not necessarily limited to:

1. A detailed statement of efforts to identify and select portions of work identified in the bid solicitation for subcontracting to certified MBE/WBE firms;
2. A listing of all MBE/WBE firms contacted that includes:
    - Name, address, telephone number and email of MBE/WBE firms solicited;
    - Date and time of contact;
    - Method of contact (written, telephone, transmittal of facsimile documents, email, etc.)
3. Copies of letters or any other evidence of mailing that substantiates outreach to MBE/WBE vendors that includes:
    - Project identification and location;
    - Classification/commodity of work items for which quotations were sought;
    - Date, item and location for acceptance of subcontractor bid proposals;
    - Detailed statement which summarizes direct negotiations with appropriate MBE/WBE firms for specific portions of the work and indicates why negotiations were unsuccessful;
    - Affirmation that Good Faith Efforts have been demonstrated by:
        - choosing subcontracting opportunities likely to achieve MBE/WBE goals;
        - not imposing any limiting conditions which were not mandatory for all subcontractors;

- providing notice of subcontracting opportunities to M/WBE firms and assist agencies at least five (5) business days in advance of the initial bid due date.

OR

b. Subcontractor participation will be deemed excessively costly when the MBE/WBE subcontractor proposal exceeds the average price quoted by more than twenty percent (20%). In order to establish that a subcontractor's quote is excessively costly, the bidder must provide the following information:

1. A detailed statement of the work identified for MBE/WBE participation for which the bidder asserts the MBE/WBE quote(s) were excessively costly (in excess of 20% higher).
   - A listing of all potential subcontractors contacted for a quotation on that work item;
   - Prices quoted for the subcontract in question by all such potential subcontractors for that work item.
2. Other documentation which demonstrates to the satisfaction of the Chief Procurement Officer that the MBE/WBE proposals are excessively costly, even though not in excess of 20% higher than the average price quoted. This determination will be based on factors that include, but are not limited to the following:
   - The City's estimate for the work under a specific subcontract;
   - The bidder's own estimate for the work under the subcontract;
   - An average of the bona fide prices quoted for the subcontract;
   - Demonstrated increase in other contract costs as a result of subcontracting to the M/WBE or other firm.

6.5.2. Assist Agency Participation in wavier/reduction requests

Every waiver and/or reduction request must include evidence that the bidder has provided timely notice of the need for subcontractors to an appropriate association/assist agency representative of the MBE/WBE business community. This notice must be given at least five (5) business days in advance of the initial bid due date.

The notice requirement of this Section will be satisfied if a bidder contacts at least one of the associations on Attachment A to these Regulations when the prime contractor seeks a waiver or reduction in the utilization goals. Attachment B to these Regulations provides the letter format that a prime contractor may use. Proof of notification prior to bid submittal (e.g. certified mail receipt or facsimile transmittal receipt) will be required to be submitted with the bid for any bid/proposal to be deemed responsive. If deemed appropriate, the Contract Compliance Officer may contact the assist agency for verification of notification.

6.5.3. Impracticability

If the Chief Procurement Officer determines that a lesser MBE and/or WBE percentage standard is appropriate with respect to a particular contract subject to competitive bidding prior to the bid solicitations for such contract, bid specifications shall include a statement of such revised standard.

The requirements set forth in these Regulations (this subsection 6.5 "Regulations Governing Reductions to or Waiver of MBE/WBE Goals") shall not apply where the Chief Procurement Officer determines prior to the bid solicitations that MBE/WBE subcontractor participation is impracticable.

This may occur whenever the Chief Procurement Officer determines that for reasons of time, need, industry practices or standards not previously known by the Chief Procurement Officer, or such other extreme circumstances as may be deemed appropriate, such a Waiver is in the best interests of the City. This determination may be made in connection with a particular contract, whether before the contract is let for bid, during the bid or award process, before or during negotiation of the contract, or during the performance of the contract.

For all notifications required to be made by bidders, in situations where the Chief Procurement Officer has determined that time is of the essence, documented telephone contact may be substituted for letter contact.

6.6. Procedure to Determine Bid Compliance

A bid may be rejected as non-responsive if it fails to submit one or more of the following with its bid demonstrating its Good Faith Efforts to meet the Contract Specific Goals by reaching out to MBEs and WBEs to perform work on the contract:

- An MBE/WBE compliance plan demonstrating how the bidder plans to meet the Contract Specific Goals; and/or
- A request for reduction or waiver of the Contract Specific Goals in accordance with Section 2-92-450 of the MCC.

Only compliance plans utilizing MBE and WBE firms that meet BOTH the Commercially Useful Function and Area of Specialty requirements will be counted toward the Contract Specific Goals.

The following Schedules and described documents constitute the bidder's MBE/WBE proposal, and must be submitted in accordance with the guidelines stated:

(1) Schedule C-1: Letter of Intent from MBE/WBE to Perform as Subcontractor, Supplier and/or Consultant.

The bidder must submit the appropriate Schedule C-1 with the bid for each MBE and WBE included on the Schedule D-1. Suppliers must submit the Schedule C-1 for Suppliers, first tier subcontractors must submit a Schedule C-1 for Subcontractors to the Prime Contractor and second or lower tier subcontractors must submit a Schedule C-1 for second tier Subcontractors. The City encourages subcontractors to utilize the electronic fillable format Schedule C-1, which is available at the Department of Procurement Services website, http://cityofchicago.org/forms. Each Schedule C-1 must be executed by each MBE and WBE and accurately detail the work to be performed by the MBE or WBE and the agreed upon rates/prices. Each Schedule C must also include a separate sheet as an attachment on which the MBE or WBE fully describes its proposed scope of work, including a description of the commercially useful function being performed by the MBE or WBE in its Area of Specialty. If a facsimile copy of the Schedule C-1 has been submitted with the bid, an executed original Schedule C-1 must be submitted by the bidder for each MBE and WBE included on the Schedule D-1 within five business days after the date of the bid opening.

Failure to submit a completed Schedule C-1 in accordance with this section shall entitle the City to deem the bid/proposal non-responsive and therefore reject the bid/proposal.

(2) Letters of Certification.

A copy of each proposed MBE/WBE firm's current Letter of Certification from the City of Chicago or Cook County Illinois, must be submitted with the bid/proposal. All Letters of Certification issued by the City of Chicago and Cook County include a statement of the MBE/WBE firm's Area of Specialty. The MBE/WBE firm's scope of work, as detailed by their Schedule C-1, must conform to their stated Area of Specialty. Letters of Certification for firms that the City or Cook County has found ineligible or has decertified will not be accepted.

(3) Schedule B: Affidavit of Joint Venture, and Joint Venture Agreements (if applicable).

If the bidder's MBE/WBE proposal includes the participation of a MBE/WBE as joint venture on any tier (either as the bidder or as a subcontractor), the bidder must provide a copy of the joint venture agreement and a Schedule B along with all other requirements listed in Section 6.3, "Joint Ventures," above. In order to demonstrate the MBE/WBE partner's share in the ownership, control, management responsibilities, risks and profits of the joint venture, the proposed joint venture agreement must include specific details related to: (1) contributions of capital and equipment; (2) work responsibilities or other performance to be undertaken by the MBE/WBE; and (3) the commitment of management, supervisory and operative personnel employed by the MBE/WBE to be dedicated to the performance of the contract. The joint venture agreement must also clearly define each partner's authority to contractually obligate the joint venture and each partner's authority to expend joint venture funds (e.g., check signing authority).

(4) Schedule D-1: Required Schedules Regarding MBE/WBE Utilization

Bidders must submit, together with the bid, a completed Schedule D-1 committing them to the utilization of each listed MBE/WBE firm. The City encourages bidders to utilize the electronic fillable format Schedule D-1, which is available at the Department of Procurement Services website, http://cityofchicago.org/forms. Except in cases where the bidder has submitted a request for a complete waiver of or variance from the MBE/WBE commitment in accordance with Section 6.5 "Regulations Governing Reductions to or Waiver of MBE/WBE Goals" herein, the bidder must commit to the expenditure of a specific dollar amount of participation by each MBE/WBE firm included on their Schedule D-1. The total dollar commitment to proposed MBEs must at least equal the MBE goal, and the total dollar commitment to proposed WBEs must at least equal the WBE goal. Bidders are responsible for calculating the dollar equivalent of the MBE and WBE goals as percentages of their total base bids or in the case of Term Agreements, depends upon requirements agreements and blanket agreements, as percentages of the total estimated usage. All commitments made by the bidder's Schedule D-1 must conform to those presented in the submitted Schedule C-1. If Schedule C-1 is submitted after the opening, the bidder may submit a revised Schedule D-1 (executed and notarized to conform with the Schedules C-1). Bidders shall not be permitted to add MBEs or WBEs after bid opening to meet the Contract Specific Goals, however, contractors are encouraged to add additional MBE/WBE vendors to their approved compliance plan during the performance of the contract when additional opportunities for participation are identified. Except in cases where substantial and documented justification is provided, bidders will not be allowed to reduce the dollar commitment made to any MBE or WBE in order to achieve conformity between the Schedules C-1 and D-1.

All commitments for joint venture agreements must be delineated in the Schedule B.

(5) Application for Approval of Mentor Protégé Agreement

Any applications for City approval of a Mentor Protégé agreement must be included with the bid. If the application is not approved, the bidder must show that it has made good faith efforts to meet the contract specific goals.

6.7. Reporting Requirements During the Term of the Contract

a. The Contractor will, not later than thirty (30) calendar days from the award of a contract by the City, execute formal contracts or purchase orders with the MBEs and WBEs included in their approved MBE/WBE Utilization Plan. These written agreements will be made available to the Chief Procurement Officer upon request.

b. The Contractor will be responsible for reporting payments to all subcontractors on a monthly basis in the form of an electronic report. Upon the first payment issued by the City of Chicago to the contractor for services performed, on the first day of each month and every month thereafter, email and or fax audit notifications will be sent out to the Contractor with instructions to report payments that have been made in the prior month to each subcontractor. The

reporting of payments to all subcontractors must be entered into the Certification and Compliance Monitoring System (C2), or whatever reporting system is currently in place, on or before the fifteenth (15th) day of each month.

c. Once the prime Contractor has reported payments made to each subcontractor, including zero dollar amount payments, the subcontractor will receive an email and or fax notification requesting them to log into the system and confirm payments received. All monthly confirmations must be reported on or before the 20th day of each month. Contractor and subcontractor reporting to the C2 system must be completed by the 25th of each month or payments may be withheld.

d. All subcontract agreements between the contractor and MBE/WBE firms or any first tier non-certified firm and lower tier MBE/WBE firms must contain language requiring the MBE/WBE to respond to email and/or fax notifications from the City of Chicago requiring them to report payments received for the prime or the non-certified firm.

Access to the Certification and Compliance Monitoring System (C2), which is a web based reporting system, can be found at: https://chicago.mwdbe.com

e. The Chief Procurement Officer or any party designated by the Chief Procurement Officer, shall have access to the contractor's books and records, including without limitation payroll records, tax returns and records and books of account, to determine the contractor's compliance with its commitment to MBE and WBE participation and the status of any MBE or WBE performing any portion of the contract. This provision shall be in addition to, and not a substitute for, any other provision allowing inspection of the contractor's records by any officer or official of the City for any purpose.

f. The Contractor shall maintain records of all relevant data with respect to the utilization of MBEs and WBEs, retaining these records for a period of at least five years after project closeout. Full access to these records shall be granted to City, federal or state authorities or other authorized persons.

6.8. Changes to Compliance Plan

6.8.1. Permissible Basis for Change Required

No changes to the Compliance Plan or contractual MBE and WBE commitments or substitution of MBE or WBE subcontractors may be made without the prior written approval of the Contract Compliance Officer. Unauthorized changes or substitutions, including performing the work designated for a subcontractor with the contractor's own forces, shall be a violation of these Special Conditions and a breach of the contract with the City, and may cause termination of the executed Contract for breach, and/or subject the bidder or contractor to contract remedies or other sanctions. The facts supporting the request for changes must not have been known nor reasonably could have been known by the parties prior to entering into the subcontract. Bid shopping is prohibited. The bidder or contractor must negotiate with the subcontractor to resolve the problem. If requested by either party, the Department of Procurement Services shall facilitate such a meeting. Where there has been a mistake or disagreement about the scope of work, the MBE or WBE can be substituted only where an agreement cannot be reached for a reasonable price for the correct scope of work.

Substitutions of a MBE or WBE subcontractor shall be permitted only on the following basis:

a) Unavailability after receipt of reasonable notice to proceed;

b) Failure of performance;

c) Financial incapacity;

d) Refusal by the subcontractor to honor the bid or proposal price or scope;

e) Mistake of fact or law about the elements of the scope of work of a solicitation where a reasonable price cannot be agreed;

f) Failure of the subcontractor to meet insurance, licensing or bonding requirements;

g) The subcontractor's withdrawal of its bid or proposal; or

h) De-certification of the subcontractor as a MBE or WBE (graduation from the MBE/WBE program does not constitute de-certification).

i) Termination of a Mentor Protégé Agreement.

6.8.2. Procedure for Requesting Approval

If it becomes necessary to substitute a MBE or WBE or otherwise change the Compliance Plan, the procedure will be as follows:

a) The bidder or contractor must notify the Contract Compliance Officer and Chief Procurement Officer in writing of the request to substitute a MBE or WBE or otherwise change the Compliance Plan. The request must state specific reasons for the substitution or change. A letter from the MBE or WBE to be substituted or affected by the change stating that it cannot perform on the contract or that it agrees with the change in its scope of work must be submitted with the request.

b) The City will approve or deny a request for substitution or other change within 15 business days of receipt of the written request.

c) Where the bidder or contractor has established the basis for the substitution to the satisfaction of the Chief Procurement Officer, it must make Good Faith Efforts to meet the Contract Specific Goal by substituting a MBE or WBE subcontractor. Documentation of a replacement MBE or WBE, or of Good Faith Efforts, must meet the requirements in section 5. If the MBE or WBE Contract Specific Goal cannot be reached and Good Faith Efforts have been made, as determined by the Chief Procurement Officer, the bidder or contractor may substitute with a non-MBE or non-WBE.

d) If a bidder or contractor plans to hire a subcontractor for any scope of work that was not previously disclosed in the Compliance Plan, the bidder or contractor must obtain the approval of the Chief Procurement Officer to modify the Compliance Plan and must make Good Faith Efforts to ensure that MBEs or WBEs have a fair opportunity to bid on the new scope of work.

e) A new subcontract must be executed and submitted to the Contract Compliance Officer within five business days of the bidder's or contractor's receipt of City approval for the substitution or other change.

The City shall not be required to approve extra payment for escalated costs incurred by the contractor when a substitution of subcontractors becomes necessary to comply with MBE/WBE contract requirements.

6.9. Non-Compliance and Damages

Without limitation, the following shall constitute a material breach of this contract and entitle the City to declare a default, terminate the contract, and exercise those remedies provided for in the contract, at law or in equity: (1) failure to demonstrate Good Faith Efforts; and (2) disqualification as a MBE or WBE of the contractor or any joint venture partner, subcontractor or supplier if its status as an MBE or WBE was a factor in the award of the contract and such status was misrepresented by the contractor.

Payments due to the contractor may be withheld until corrective action is taken.

Pursuant to MCC 2-92-445 or 2-92-740, as applicable, remedies or sanctions may include a penalty in the amount of the discrepancy between the amount of the commitment in the Compliance Plan, as such amount may be amended through change orders or otherwise over the term of the contract, and the amount paid to MBEs or WBEs, and disqualification from contracting or subcontracting on additional City contracts for up to three years. The consequences provided herein shall be in addition to any other criminal or civil liability to which such entities may be subject.

The contractor shall have the right to protest the final determination of non-compliance and the imposition of any penalty by the Chief Procurement Officer pursuant to MCC 2-92-445 or 2-92-740, within 15 business days of the final determination.

6.10. Arbitration

a) In the event a contractor has not complied with the contractual MBE/WBE percentages in its Schedule D, underutilization of MBEs/WBEs shall entitle the affected MBE/WBE to recover from the contractor damages suffered by such entity as a result of being underutilized; provided, however, that this provision shall not apply to the extent such underutilization occurs pursuant to a waiver or substitution approved by the City. The Ordinance and contracts subject thereto provide that any disputes between the contractor and such affected MBEs/WBEs regarding damages shall be resolved by binding arbitration before an independent arbitrator other than the City, with reasonable expenses, including attorney's fees, being recoverable by a prevailing MBE/WBE in accordance with these regulations. This provision is intended for the benefit of any MBE/WBE affected by underutilization and grants such entity specific third party beneficiary rights. Any rights conferred by this regulation are non-waivable and take precedence over any agreement to the contrary, including but not limited to those contained in a subcontract, suborder, or communicated orally between a contractor and a MBE/WBE.

b) An MBE/WBE desiring to arbitrate shall contact the contractor in writing to initiate the arbitrative process. Except as otherwise agreed to in writing by the affected parties subject to the limitation contained in the last sentence of the previous paragraph, within ten (10) calendar days of the contractor receiving notification of the intent to arbitrate from the MBE/WBE the above-described disputes shall be arbitrated in accordance with the Commercial Arbitration Rules of the American Arbitration Association (AAA), a not-for-profit agency, with an office at 225 North Michigan Avenue, Suite 2527, Chicago, Illinois 60601-7601 [Phone: (312) 616-6560; Fax: (312) 819-0404]. All such arbitrations shall be initiated by the MBE/WBE filing a demand for arbitration with the AAA; shall be conducted by the AAA; and held in Chicago, Illinois.

c) All arbitration fees are to be paid pro rata by the parties, however, that the arbitrator is authorized to award reasonable expenses, including attorney and arbitrator fees, as damages to a prevailing MBE/WBE.

d) The MBE/WBE must send the City a copy of the Demand for Arbitration within ten (10) calendar days after it is filed with the AAA. The MBE/WBE also must send the City a copy of the decision of the arbitrator within ten (10) calendar days of receiving such decision. Judgment upon the award rendered by the arbitrator may be entered in any court of competent jurisdiction.

6.11. Equal Employment Opportunity

Compliance with MBE and WBE requirements will not diminish or supplant equal employment opportunity and civil rights provisions as required by law.

6.12. Attachments and Schedules

The following attachments and schedules follow, they may also be downloaded from the Internet at: http://www.cityofchicago.org/forms

- Attachment A: Assist Agencies
- Attachment B: Sample Format for Requesting Assist Agency Comments on Bidder's Request for Reduction or Waiver of MBE/WBE Goals
- Schedule B: Affidavit of Joint Venture (MBE/WBE)
- Schedule C-1: Letter of Intent From MBE/WBE To Perform As Subcontractor, Supplier and/or Consultant
- Schedule D-1: Compliance Plan Regarding MBE/WBE Utilization

Attachment A –Assist Agency List

DEPARTMENT OF PROCUREMENT SERVICES

CITY OF CHICAGO ASSIST AGENCY LIST

Assist Agencies are comprised of not-for-profit agencies and/or chamber of commerce agencies that represent the interest of small, minority and/or women owned businesses.

American Brotherhood of Contractors
935 West 175th Street
Homewood, Illinois 60430
Phone: (773) 491-5640
Email: arba@constructive-business.com

Asian American Business Expo
207 East Ohio St. Suite 218
Chicago, IL 60611
Phone: 312-233-2810
Fax: 312-268-6388
Email: Janny@AsianAmericanBusinessExpo.org

Asian American Institute
4753 N. Broadway St. Suite 904
Chicago, IL 60640
Phone: (773) 271-0899
Fax: (773) 271-1982
Email: kfernicola@aaichicago.org
Web: www.aaichicago.org

Association of Asian Construction Enterprises
333 N. Ogden Avenue
Chicago, IL 60607
Phone: (847) 525-9693
Email: nakmancorp@aol.com

Black Contractors United
400 W. 76th Street, Suite 200
Chicago, IL 60620
Phone: (773 483-4000
Fax: (773) 483-4150
Email: bcunewera@att.net
Web: www.blackcontractorsunited.com

Cosmopolitan Chamber of Commerce
203 N. Wabash, Suite 518
Chicago, IL 60601
Phone: (312) 499-0611
Fax: (312) 332-2688
Email: ccarey@cosmococ.org
Web: www.cosmochamber.org

Eighteenth Street Development Corporation
1843 South Carpenter
Chicago, Illinois 60608
Phone: (312) 733-2287
Fax: (773)-353-1683
asoto@eighteenthstreet.org
www.eighteenthstreet.org

Chatham Business Association Small Business Development, Inc.
8441 S. Cottage Grove Avenue
Chicago, IL 60619
Phone: (773)994-5006
Fax: (773)994-9871
Email: melkelcba@sbcglobal.net
Web: www.cbaworks.org

Chicago Area Gay & Lesbian Chamber of Commerce
3656 N. Halsted
Chicago, IL 60613
Phone: (773) 303-0167
Fax: (773) 303-0168
Email: info@glchamber.org
Web: www.glchamber.org

Chicago Minority Supplier Development Council, Inc.
105 W. Adams, Suite 2300
Chicago, IL 60603-6233
Phone: (312) 755-8880
Fax: (312) 755-8890
Email: pbarreda@chicagomsdc.org
Web: www.chicagomsdc.org

Chicago Urban League
4510 S. Michigan Ave.
Chicago, IL 60653
Phone: (773) 285-5800
Fax: (773) 285-7772
Email: president@thechicagourbanleague.org
Web: www.cul-chicago.org

Chicago Women in Trades (CWIT)
4425 S. Western Blvd.
Chicago, IL 60609-3032
Phone: (773) 376-1450
Fax: (312) 942-0802
Email: cwitinfo@cwit2.org
Web: www.chicagowomenintrades.org

Coalition for United Community Labor Force
1253 W. 63rd Street
Chicago, IL 60636
Phone: (312) 243-5149
Email: johnrev.hatchett@comcast.net

Rev. 8/2013

City of Chicago Department of Procurement Services ~ Assist Agencies (cont'd)

Federation of Women Contractors
5650 S. Archer Avenue
Chicago, IL 60638
Phone: (312) 360-1122
Fax: (312) 360-0239
Email: fwcchicago@aol.com
Web: www.fwcchicago.com

Hispanic American Construction Industry Association (HACIA)
650 West Lake Street
Chicago, IL 60661
Phone: (312) 666-5910
Fax: (312) 666-5692
Email: info@haciaworks.org
Web: www.haciaworks.org

Illinois Hispanic Chamber of Commerce
855 W. Adams, Suite 100
Chicago, IL 60607
Phone: (312) 425-9500
Fax: (312) 425-9510
Email: oduque@ihccbusiness.net
Web: www.ihccbusiness.net

Latin American Chamber of Commerce
3512 West Fullerton Avenue
Chicago, IL 60647
Phone: (773) 252-5211
Fax: (773) 252-7065
Email:d.lorenzopadron@latinamericanchamberofcommerce.com
Web: www.latinamericanchamberofcommerce.com

National Organization of Minority Engineers
33 West Monroe Suite 1540
Chicago, Illinois 60603
Phone: (312) 425-9560
Fax: (312) 425-9564
Email: shandy@infrastructure-eng.com
Web: www.nomeonline.org

National Association of Women Business Owners
Chicago Chapter
230 E. Ohio, Suite 400
Chicago, IL 60611
Phone: (312) 224-2605
Fax: (312) 6448557
Email: info@nawbochicago.org
Web: www.nawbochicago.org

Rainbow/PUSH Coalition
International Trade Bureau
930 E. 50th Street
Chicago, IL 60615
Phone: (773) 256-2781
Fax: (773) 373-4104
Email: bevans@rainbowpush.org
Web: www.rainbowpush.org

South Shore Chamber, Incorporated
Black United Funds Bldg.
1750 E. 71st Street
Chicago, IL 60649-2000
Phone: (773) 955- 9508
Email: sshorechamber@sbcglobal.net
Web: www.southshorechamberinc.org

Suburban Minority Contractors Association
1250 Grove Ave. Suite 200
Barrington, IL 60010
Phone: (847) 852-5010
Fax: (847) 382-1787
Email: aprilcobra@hotmail.com
Web: www.suburbanblackcontractors.org

Women Construction Owners & Executives (WCOE)
Chicago Caucus
308 Circle Avenue
Forest Park, IL 60130
Phone: (708) 366-1250
Fax: (708) 366-5418
Email: mkm@mkmservices.com
Web: www.wcoeusa.org

Women's Business Development Center
8 South Michigan Ave., Suite 400
Chicago, IL 60603
Phone: (312) 853-3477
Fax: (312) 853-0145
Email: fcurry@wbdc.org
Web: www.wbdc.org

Rev. 8/2013

Attachment B - Sample Format for Requesting Assist Agency Comments on Bidder's Request for Reduction or Waiver of MBE/WBE Goals

On Bidder/Proposer's Letterhead – SEND TO THE ASSIST AGENCIES – DO NOT SEND TO THE CITY

RETURN RECEIPT REQUESTED

(Date)

Specification No.: {Specification Number}
Project Description: {PROJECT DESCRIPTION}

(Assist Agency Name and Address – **SEND TO THE ASSIST AGENCIES – DO NOT SEND TO THE CITY**)

Dear _____:

_____ (Bidder/Proposer) intends to submit a bid/proposal in response to the above referenced specification with the City of Chicago. Bids are due _____ advertised specification with the City of Chicago.

The following areas have been identified for subcontracting opportunities on both a direct and indirect basis:

_____

_____

_____

Our efforts to identify potential subcontractors have not been successful in order to meet the Disadvantaged/ Minority/Women Business Enterprise contract goal. **Due to the inability to identify an appropriate DBE/MBE/WBE firm certified by the City of Chicago to participate as a subcontractor or joint venture partner, a request for the waiver of the contract goals will be submitted.** If you are aware of such a firm, please contact

_____
Name of Company Representative at Address/Phone

within (10) ten business days of receipt of this letter.

Under the City of Chicago's MBE/WBE/DBE Ordinance, your agency is entitled to comment upon this waiver request to the City of Chicago. Written comments may be directed within ten (10) working days of your receipt of this letter to:

Monica Jimenez, Deputy Procurement Officer
Department of Procurement Services
City of Chicago
121 North La Salle Street, Room 806
Chicago, Illinois 60602

If you wish to discuss this matter, please contact the undersigned at _____.

Sincerely,

Schedule B – Affidavit of Joint Venture

SCHEDULE B: Affidavit of Joint Venture (MBE/WBE)

This form need not be submitted if all joint venturers are MBEs and/or WBEs. In such a case, however, a written joint venture agreement among the MBE and WBE venturers must be submitted. In all proposed joint ventures, each MBE and/or WBE venturer must submit a copy of their current Letter of Certification.

All Information Requested by this Schedule must Be Answered in the Spaces Provided. Do Not Refer to Your Joint Venture Agreement Except to Expand on Answers Provided on this Form. If Additional Space Is Required, Additional Sheets May Be Attached.

I. Name of joint venture: _____
Address of joint venture: _____
_____
Phone number of joint venture: _____

II. Identify each non-MBE/WBE venturer(s):
Name of Firm: _____
Address: _____
Phone: _____
Contact person for matters concerning MBE/WBE compliance: _____

III. Identify each MBE/WBE venturer(s):
Name of Firm: _____
Address: _____
Phone: _____
Contact person for matters concerning MBE/WBE compliance: _____

IV. Describe the role(s) of the MBE and/or WBE venturer(s) in the joint venture: _____
_____
_____
_____

V. Attach a copy of the joint venture agreement. In order to demonstrate the MBE and/or WBE venturer's share in the ownership, control, management responsibilities, risks and profits of the joint venture, the proposed joint venture agreement must include specific details related to: (1) the contributions of capital and equipment; (2) work items to be performed by the MBE/WBE's own forces; (3) work items to be performed under the supervision of the MBE/WBE venturer; and (4) the commitment of management, supervisory and operative personnel employed by the MBE/WBE to be dedicated to the performance of the project.

VI. Ownership of the Joint Venture.
A. What are the percentage(s) of MBE/WBE ownership of the joint venture?
MBE/WBE ownership percentage(s) _____
Non-MBE/WBE ownership percentage(s) _____

B. Specify MBE/WBE percentages for each of the following (provide narrative descriptions and other detail as applicable):

1. Profit and loss sharing: _____

2. Capital contributions:
(a) Dollar amounts of initial contribution: _____

Schedule B: Affidavit of Joint Venture (MBE/WBE)

_____

(b) Dollar amounts of anticipated on-going contributions:_____

3. Contributions of equipment (Specify types, quality and quantities of equipment to be provided by each venturer):_____
_____
_____
_____

4. Other applicable ownership interests, including ownership options or other agreements which restrict or limit ownership and/or control:_____
_____
_____
_____

5. Provide copies of all written agreements between venturers concerning this project.

6. Identify each current City of Chicago contract (and each contract completed during the past two (2) years) by a joint venture of two or more firms participating in this joint venture:
_____
_____
_____
_____

VII. Control of and Participation in the Joint Venture. Identify by name and firm those individuals who are, or will be, responsible for, and have the authority to engage in the following management functions and policy decisions. (Indicate any limitations to their authority such as dollar limits and co-signatory requirements.):

A. Joint venture check signing:
_____
_____
_____
_____

B. Authority to enter contracts on behalf of the joint venture:
_____
_____
_____
_____

C. Signing, co-signing and/or collateralizing loans:
_____
_____
_____
_____

D. Acquisition of lines of credit:
_____
_____

Schedule B: Affidavit of Joint Venture (MBE/WBE)

_____

E. Acquisition and indemnification of payment and performance bonds:

_____
_____
_____
_____

F. Negotiating and signing labor agreements:

_____
_____
_____
_____

G. Management of contract performance. (Identify by name and firm only):

1. Supervision of field operations:_____
_____
2. Major purchases:_____
_____
3. Estimating:_____
_____
4. Engineering:_____
_____

VIII. Financial Controls of joint venture:
A. Which firm and/or individual will be responsible for keeping the books of account?

_____

B. Identify the managing partner, if any, and describe the means and measure of their compensation:

_____
_____
_____
_____

C. What authority does each venturer have to commit or obligate the other to insurance and bonding companies, financing institutions, suppliers, subcontractors, and/or other parties participating in the performance of this contract or the work of this project?

_____
_____
_____
_____

IX. State the approximate number of operative personnel (by trade) needed to perform the joint venture's work under this contract. Indicate whether they will be employees of the non-MBE/WBE firm, the MBE/WBE firm, or the joint venture.

Schedule B: Affidavit of Joint Venture (MBE/WBE)

Trade	Non-MBE/WBE Firm (Number)	MBE/WBE (Number)	Joint Venture (Number)

If any personnel proposed for this project will be employees of the joint venture:

A. Are any proposed joint venture employees currently employed by either venturer?
Currently employed by non-MBE/WBE (number) ____ Employed by MBE/WBE ____

B. Identify by name and firm the individual who will be responsible for hiring joint venture employees:
_____

C. Which venturer will be responsible for the preparation of joint venture payrolls:
_____

X. Please state any material facts of additional information pertinent to the control and structure of this joint venture.

_____
_____
_____
_____
_____
_____
_____
_____
_____
_____
_____
_____
_____
_____
_____

Page 4 of 5

Schedule B: Affidavit of Joint Venture (MBE/WBE)

The undersigned affirms that the foregoing statements are correct and include all material information necessary to identify and explain the terms and operations of our joint venture and the intended participation of each venturer in the undertaking. Further, the undersigned covenant and agree to provide to the City current, complete and accurate information regarding actual joint venture work and the payment therefore, and any proposed changes in any provision of the joint venture agreement, and to permit the audit and examination of the books, records and files of the joint venture, or those of each venturer relevant to the joint venture by authorized representatives of the City or the Federal funding agency.

Any material misrepresentation will be grounds for terminating any contract which may be awarded and for initiating action under federal or state laws concerning false statements.

Note: If, after filing this Schedule B and before the completion on the joint venture's work on the project, there is any change in the information submitted, the joint venture must inform the City of Chicago, either directly or through the prime contractor if the joint venture is a subcontractor.

_____		_____
Name of MBE/WBE Partner Firm	Firm	Name of Non-MBE/WBE Partner
_____		_____
Signature of Affiant		Signature of Affiant
_____		_____
Name and Title of Affiant		Name and Title of Affiant
_____		_____
Date		Date

On this _____ day of _____ , 20 ____ , the above-signed officers

_____,
(names of affiants)

personally appeared and, known to me be the persons described in the foregoing Affidavit, acknowledged that they executed the same in the capacity therein stated and for the purpose therein contained.

IN WITNESS WHEREOF, I hereunto set my hand and official seal.

_____
Signature of Notary Public

My Commission Expires: _____

(SEAL)

Page 5 of 5

Schedule C-1: Letter of Intent From MBE/WBE To Perform As Subcontractor, Supplier and/or Consultant

FOR NON-CONSTRUCTION PROJECTS ONLY

SCHEDULE C-1

MBE/WBE Letter of Intent to Perform as a Subcontractor, Supplier, or Consultant

Project Name:_____ Specification No.:_____

From:_____
(Name of MBE/WBE Firm)

To:_____and the City of Chicago.
(Name of Prime Contractor)

The MBE or WBE status of the undersigned is confirmed by the attached City of Chicago or Cook County, Illinois Certification Letter. 100% MBE or WBE participation is credited for the use of a MBE or WBE "manufacturer." 60% participation is credited for the use of a MBE or WBE "regular dealer."

The undersigned is prepared to perform the following services in connection with the above named project/contract. If more space is required to fully describe the MBE or WBE proposed scope of work and/or payment schedule, including a description of the commercially useful function being performed. Attach additional sheets as necessary:

_____
_____
_____

The above described performance is offered for the following price and described terms of payment:

_____
_____
_____

SUB-SUBCONTRACTING LEVELS

A zero (0) must be shown in each blank if the MBE or WBE will not be subcontracting any of the work listed or attached to this schedule.

_____ % of the dollar value of the MBE or WBE subcontract that will be subcontracted to non MBE/WBE contractors.

_____ % of the dollar value of the MBE or WBE subcontract that will be subcontracted to MBE or WBE contractors.

NOTICE: **If any of the MBE or WBE scope of work will be subcontracted, list the name of the vendor and attach a brief explanation, description and pay item number of the work that will be subcontracted. MBE/WBE credit will not be given for work subcontracted to Non-MBE/WBE contractors, except for as allowed in the Special Conditions Regarding Minority Business Enterprise Commitment and Women Business Enterprise Commitment.**

The undersigned will enter into a formal written agreement for the above work with you as a Prime Contractor, conditioned upon your execution of a contract with the City of Chicago, within three (3) business days of your receipt of a signed contract from the City of Chicago.

The undersigned has entered into a formal written mentor protégé agreement as a subcontractor/protégé with you as a Prime Contractor/mentor: ( ) Yes ( ) No

NOTICE: **THIS SCHEDULE AND ATTACHMENTS REQUIRE ORIGINAL SIGNATURES.**

_____
(Signature of President/Owner/CEO or Authorized Agent of MBE/WBE) (Date)

_____
(Name/Title-Please Print)

_____
(Email & Phone Number)

08/2013 Page 1 of 1

Schedule D-1: Affidavit of Implementation of MBE/WBE Goals and Participation Plan

SCHEDULE D-1
Compliance Plan Regarding MBE/WBE Utilization
Affidavit of Prime Contractor

FOR NON-CONSTRUCTION PROJECTS ONLY

MUST BE SUBMITTED WITH THE BID. FAILURE TO SUBMIT THE SCHEDULE D-1 WILL CAUSE THE BID TO BE REJECTED. DUPLICATE AS NEEDED.

Project Name:_____

Specification No.:_____

In connection with the above captioned contract, I HEREBY DECLARE AND AFFIRM that I am a duly authorized representative of _____.
(Name of Prime Consultant/Contractor)

and that I have personally reviewed the material and facts set forth herein describing our proposed plan to achieve the MBE/WBE goals of this contract.

All MBE/WBE firms included in this plan have been certified as such by the City of Chicago and/or Cook County, Illinois (Letters of Certification Attached).

I. Direct Participation of MBE/WBE Firms:

NOTE: The bidder/proposer shall, in determining the manner of MBE/WBE participation, first consider involvement with MBE/WBE firms as joint venture partners, subcontractors, and suppliers of goods and services directly related to the performance of this contract.

A. If bidder/proposer is a joint venture and one or more joint venture partners are certified MBEs or WBEs, attach copies of Letters of Certification, Schedule B form and a copy of Joint Venture Agreement clearly describing the role of each MBE/WBE firm(s) and its ownership interest in the joint venture.

B. Complete this section for each MBE/WBE Subcontractor/Supplier/Consultant participating on this contract:

1. Name of MBE/WBE:_____

Address:_____

Contact Person:_____

Phone Number:_____

Dollar Value of Participation $_____

Percentage of Participation % _____

Mentor Protégé Agreement (attach executed copy): ( ) Yes ( ) No Add'l Percentage Claimed:[1] ____%

Total Participation % _____

2. Name of MBE/WBE:_____

Address:_____

Contact Person:_____

[1] The Prime Contractor may claim an additional 0.333 percent participation credit (up to a maximum of five (5) percent) for every one (1) percent of the value of the contract performed by the MBE/WBE protégé firm.

Schedule D-1: Prime Contractor Affidavit-MBE/WBE Compliance Plan

Phone Number:_____

Dollar Value of Participation $_____

Percentage of Participation % _____

Mentor Protégé Agreement (attach executed copy): ( ) Yes ( ) No Add'l Percentage Claimed: ____%

Total Participation % _____

3. Name of MBE/WBE:_____

Address:_____

Contact Person:_____

Phone Number:_____

Dollar Value of Participation $_____

Percentage of Participation % _____

Mentor Protégé Agreement (attach executed copy): ( ) Yes ( ) No Add'l Percentage Claimed: ____%

Total Participation % _____

4. Name of MBE/WBE:_____

Address:_____

Contact Person:_____

Phone Number:_____

Dollar Value of Participation $_____

Percentage of Participation % _____

Mentor Protégé Agreement (attach executed copy): ( ) Yes ( ) No Add'l Percentage Claimed: ____%

Total Participation % _____

5. Attach Additional Sheets as Needed

II. Indirect Participation of MBE/WBE Firms

NOTE: This section need not be completed if the MBE/WBE goals have been met through the direct participation outlined in Section I. If the MBE/WBE goals have not been met through direct participation, Contractor will be expected to demonstrate that the proposed MBE/WBE direct participation represents the maximum achievable under the circumstances. Only after such a demonstration will indirect participation be considered.

MBE/WBE Subcontractors/Suppliers/Consultants proposed to perform work or supply goods or services where such performance does not directly relate to the performance of this contract:

1. Name of MBE/WBE:_____

Address:_____

Contact Person:_____

Schedule D-1: Prime Contractor Affidavit-MBE/WBE Compliance Plan

Phone Number:_____

Dollar Value of Participation $_____

Percentage of Participation % _____

Mentor Protégé Agreement (attach executed copy): ( ) Yes ( ) No Add'l Percentage Claimed: ____%

Total Participation % _____

2. Name of MBE/WBE:_____

Address:_____

Contact Person:_____

Phone Number:_____

Dollar Value of Participation $_____

Percentage of Participation % _____

Mentor Protégé Agreement (attach executed copy): ( ) Yes ( ) No Add'l Percentage Claimed: ____%

Total Participation % _____

3. Name of MBE/WBE:_____

Address:_____

Contact Person:_____

Phone Number:_____

Dollar Value of Participation $_____

Percentage of Participation % _____

Mentor Protégé Agreement (attach executed copy): ( ) Yes ( ) No Add'l Percentage Claimed: ____%

Total Participation % _____

4. Name of MBE/WBE:_____

Address:_____

Contact Person:_____

Phone Number:_____

Dollar Value of Participation $_____

Percentage of Participation % _____

Mentor Protégé Agreement (attach executed copy): ( ) Yes ( ) No Add'l Percentage Claimed: ____%

Total Participation % _____

5. Attach Additional Sheets as Needed

Schedule D-1: Prime Contractor Affidavit-MBE/WBE Compliance Plan

III. Summary of MBE/WBE Proposal

A. MBE Proposal **(Direct & Indirect)**

1. MBE Direct Participation

MBE Firm Name	Dollar Amount Participation ($)	Percent Amount Participation (%)
Total Direct MBE Participation		

2. MBE Indirect Participation

MBE Firm Name	Dollar Amount Participation ($)	Percent Amount Participation (%)
Total Indirect MBE Participation		

B. WBE Proposal **(Direct & Indirect)**

1. WBE Direct Participation

WBE Firm Name	Dollar Amount Participation ($)	Percent Amount Participation (%)
Total Direct WBE Participation		

2. WBE Indirect Participation

WBE Firm Name	Dollar Amount Participation ($)	Percent Amount Participation (%)
Total Indirect WBE Participation		

Schedule D-1: Prime Contractor Affidavit-MBE/WBE Compliance Plan

The Prime Contractor designates the following person as its MBE/WBE Liaison Officer:

_____
(Name- Please Print or Type) (Phone)

I DO SOLEMNLY DECLARE AND AFFIRM UNDER PENALTIES OF PERJURY THAT THE CONTENTS OF THE FOREGOING DOCUMENT ARE TRUE AND CORRECT, THAT NO MATERIAL FACTS HAVE BEEN OMITTED, AND THAT I AM AUTHORIZED ON BEHALF OF THE PRIME CONTRACTOR TO MAKE THIS AFFIDAVIT.

_____
(Name of Prime Contractor – Print or Type)

State of:_____

_____
(Signature)

County of:_____

_____
(Name/Title of Affiant – Print or Type)

_____
(Date)

On this_____day of_____, 20____, the above signed officer _____
(Name of Affiant)

personally appeared and, known by me to be the person described in the foregoing Affidavit, acknowledged that (s)he executed the same in the capacity stated therein and for the purposes therein contained.

IN WITNESS WHEREOF, I hereunto set my hand and seal.

_____
(Notary Public Signature)

SEAL:

Commission Expires:_____

08/2013 Page 5 of 5

ARTICLE 7. INSURANCE REQUIREMENTS

The Contractor must provide and maintain for the life of this Contract and at Contractor's own expense, until Contract completion and during the time period following final completion if Contractor is required to return and perform any additional work, the insurance coverage and requirements specified below, insuring all operations related to the Contract.

7.1. Insurance to be Provided

7.1.1. Workers Compensation and Employers Liability

Workers Compensation Insurance, as prescribed by applicable law covering all employees who are to provide a service under this Contract and Employers Liability coverage with limits of not less than $100,000 each accident, illness or disease.

7.1.2. Commercial General Liability (Primary and Umbrella)

Commercial General Liability Insurance or equivalent with limits of not less than $1,000,000 per occurrence for bodily injury, personal injury, and property damage liability. Coverages must include the following: All premises and operations, products/completed operations, explosion, collapse, underground, separation of insureds, defense, and contractual liability (with no limitation endorsement). The City of Chicago is to be named as an additional insured on a primary, non-contributory basis for any liability arising directly or indirectly from the work.

7.1.3. Automobile Liability (Primary and Umbrella)

When any motor vehicles (owned, non-owned and hired) are used in connection with work to be performed, the Contractor must provide Automobile Liability Insurance with limits of not less than $500,000 per occurrence for bodily injury and property damage. The City of Chicago is to be named as an additional insured on a primary, non-contributory basis.

7.1.4. All Risk Property

The Contractor must maintain All Risk Commercial Property Insurance covering loss or damage at full replacement cost to any City of Chicago equipment, materials, parts, or supplies while in the care, custody, and control of the Contractor as part of the Contract. The Contractor is responsible for any damage to City property at replacement cost that results from this Contract.

7.2. Additional Requirements

The Contractor must furnish the City of Chicago, Department of Procurement Services, City Hall, Room 806, 121 North LaSalle Street, Chicago, Illinois 60602, original Certificates of Insurance, or such similar evidence, to be in force on the date of this Contract, and Renewal Certificates of Insurance, or such similar evidence, if the coverages have an expiration or renewal date occurring during the term of this Contract. The Contractor must submit evidence of insurance on the City of Chicago Insurance Certificate Form (copy attached as an exhibit) or equivalent prior to Contract award. The receipt of any certificate does not constitute agreement by the City that the insurance requirements in the Contract have been fully met or that the insurance policies indicated on the certificate are in compliance with all Contract requirements. The failure of the City to obtain certificates or other insurance evidence from Contractor is not a waiver by the City of any requirements for the Contractor to obtain and maintain the specified coverages. The Contractor must advise all insurers of the Contract provisions regarding insurance. Non-conforming insurance does not relieve Contractor of the obligation to provide insurance as specified herein. No fulfillment of the insurance conditions may constitute a violation of the Contract, and the City retains the right to stop work until proper evidence of insurance is provided, or the Contract may be terminated.

Contractor must furnish Certificates Insurance of Coverage of any or all insurance policies listing the City as an additional insured upon request by the Chief Procurement Officer. All Certificates Insurance of Coverage must be signed, dated and reference the City contract number.

The insurance must provide for sixty (60) days prior written notice to be given to the City in the event coverage is substantially changed, canceled, or non-renewed.

Any deductibles or self-insured retentions on referenced insurance coverages must be borne by Contractor.

The Contractor agrees that insurers waive their rights of subrogation against the City of Chicago, its employees, elected officials, agents, or representatives.

The coverages and limits furnished by Contractor in no way limit the Contractor's liabilities and responsibilities specified within the Contract or by law.

Any insurance or self-insurance programs maintained by the City of Chicago do not contribute with insurance provided by the Contractor under the Contract.

The required insurance to be carried is not limited by any limitations expressed in the indemnification language in this Contract or any limitation placed on the indemnity in this Contract given as a matter of law.

If Contractor is a joint venture or limited liability company, the insurance policies must name the joint venture or limited liability company and each of its separate constituent entities as named insureds.

The Contractor must require all subcontractors to provide the insurance required herein, or Contractor may provide the coverages for subcontractors. All subcontractors are subject to the same insurance requirements of Contractor unless otherwise specified in this Contract.

If Contractor or subcontractor desire additional coverages, the party desiring the additional coverages is responsible for the acquisition and cost.

Notwithstanding any provision in the Contract to the contrary, the City of Chicago Risk Management Department maintains the right to modify, delete, alter or change these requirements.

ARTICLE 8. ECONOMIC DISCLOSURE STATEMENT AND AFFIDAVIT (EDS)

8.1. Online EDS Filing Required Prior To Bid Opening

The Bidder must prepare an online EDS prior to the bid opening date.

A BIDDER THAT DOES NOT PREPARE AN ELECTRONIC EDS PRIOR TO THE BID OPENING WILL BE FOUND NON-RESPONSIVE AND ITS BID WILL BE REJECTED.

NOTE:

A. Filing an "EDS Information Update" does NOT satisfy the requirement to file an electronic EDS prior to bid opening.

B. Filing an EDS in a hard copy or paper copy form does NOT satisfy the requirement to file an electronic EDS prior to bid opening.

C. Filing an EDS for another mater (different bid, contract, etc.) does NOT satisfy the requirement to file an electronic EDS prior to bid opening.

D. When completing the online EDS, please choose the Department of Procurement Services as the City agency or department that is requesting the EDS.

8.2. Online EDS Web Link

The web link for the Online EDS is https://webapps.cityofchicago.org/EDSWeb

8.3. Online EDS Number

Upon completion of the online EDS submission process, the Bidder will be provided an EDS number. Bidders should provide this number here:

EDS Number: _____

8.4. Online EDS Certification of Filing

Upon completion of the online submission process, the Bidder will be able to print a hard copy Certificate of Filing. The Bidder should submit the signed Certificate of Filing with its bid.

Please insert your Certification of Filing following this page.

A Bidder that does not include a signed Certificate of Filing with its bid must provide it upon the request of the Chief Procurement Officer.

8.5. Preparation Checklist for Registration

To expedite and ease your registration process, we recommend that you collect the following information prior to registering for an Online EDS user account:

_____ 1. Invitation number, if you were provided an invitation number.

_____ 2. EDS document from previous years, if available.

_____ 3. Email address to correspond with the Online EDS system.

4. Company Information:

_____ a. Legal Name

_____ b. FEIN/SSN

_____ c. City of Chicago Vendor Number, if available.

_____ d. Address and phone number information that you would like to appear on your EDS documents.

_____ e. EDS Captain. Check for an EDS Captain in your company - this maybe the person that usually submits EDS for your company or the first person that registers for your company.

8.6. Preparation Checklist for EDS Submission

To expedite and ease your EDS submission, we recommend that you collect the following information prior to updating your EDS information online.

Items #1 through #7 are needed for both EDS information updates and contract related EDS documents:

_____ 1. Invitation number, if you were provided with an invitation number.

_____ 2. Site address that is specific to this EDS.

_____ 3. Contact that is responsible for this EDS.

_____ 4. EDS document from previous years, if available.

_____ 5. Ownership structure and if applicable, owners' company information:

_____ a. % of ownership

_____ b. Legal Name

_____ c. FEIN/SSN

_____ d. City of Chicago Vendor Number, if available.

_____ e. Address

_____ 6. List of directors, officers, titleholders, etc. (if applicable).

_____ 7. For partnerships/LLC/LLP/Joint ventures, etc.; List of controlling parties (if applicable).

Items #8 and #9 are needed ONLY for contract related EDS documents:

1. Contract related information (if applicable):

_____ a. City of Chicago contract package

_____ b. Cover page of City of Chicago bid/solicitation package

_____ c. If EDS is related to a mod, then cover page of your current contract with the City.

2. List of subcontractors and retained parties:

_____ a. Name

_____ b. Address

_____ c. Fees – Estimated or paid

8.7. EDS Frequently Asked Questions

Q: Where do I file?

A: The web link for the Online EDS is https://webapps.cityofchicago.org/EDSWeb

Q: How do I get help?

A: If there is a question mark on a page or next to a field, click on the question mark for help filling out the page or field. You may also consult the User Manual and the Training Videos available on the left menu.

Q: Why do I have to submit an EDS?

A: The Economic Disclosure Statement (EDS) is required of applicants making an application to the City for action requiring City Council, City department or other City agency approval. For example, all bidders seeking a City contract are required to submit an EDS. Through the EDS, applicants make disclosures required by State law and City ordinances and certify compliance with various laws and ordinances. An EDS is also required of certain parties related to the applicant, such as owners and controlling parties.

Q: Who is the Applicant?

A: "Applicant" means any entity or person making an application to the City for action requiring City Council or other City agency approval. The applicant does not include owners and parent companies.

Q: Who is the Disclosing Party?

A: "Disclosing Party" means any entity or person submitting an EDS. This includes owners and parent companies.

Q: What is an entity or legal entity?

A: "Entity' or 'Legal Entity" means a legal entity (for example, a corporation, partnership, joint venture, limited liability company or trust).

Q: What is a person for purposes of the EDS?

A: "Person" means a human being.

Q: Who must submit an EDS?

A. An EDS must be submitted in any of the following three circumstances:

Applicants: An Applicant must always file this EDS. If the Applicant is a legal entity, state the full name of that legal entity. If the Applicant is a person acting on his/her own behalf, state his/her name.

Entities holding an interest: Whenever a legal entity has a beneficial interest (E. G. direct or indirect ownership) of more than 7.5% in the Applicant, each such legal entity must file an EDS on its own behalf.

Controlling entities: Whenever a Disclosing Party is a general partnership, limited partnership, limited liability company, limited liability partnership or joint venture that has a general partner, managing member, manager or other

entity that can control the day-to-day management of the Disclosing Party, that entity must also file an EDS on its own behalf. Each entity with a beneficial interest of more than 7.5% in the controlling entity must also file an EDS on its own behalf.

Q: What information is needed to submit an EDS?

A: The information contained in the Preparation Checklist for EDS submission.

Q: I don't have a user ID & password. Can I still submit an Online EDS?

A: No. You must register and create a user ID and password before submitting an Online EDS.

Q: What information is needed to request a user ID & password for Online EDS?

A: The information contained in the Preparation Checklist for Registration is needed to request a login for the Online EDS.

Q: I already have a username and password from another City web site (City Web Portal, Department of Construction and Permits, Department of Consumer Services, etc.). Can I log-in the Online EDS with that account?

A: Usually not. The Online EDS uses a user ID and password system that is shared by the Public Vehicle Advertising and Water Payment web sites. You may use a username and password from those sites by answering "Yes" to "Is this an existing City of Chicago user ID?" when registering. Other usernames and passwords will not be automatically recognized. However, you may choose to create an identical username for the Online EDS if it is not already taken.

Q: I don't have an email address. How do I submit an Online EDS?

A: You cannot get an account to submit an online EDS without an email address. If you need an e-mail address, we suggest that you use a free internet email provider such as www.hotmail.com, www.yahoo.com or rnail.google.com to open an account. The City does not endorse any particular free internet email provider. Public computers are available at all Chicago Public Library branches.

Q: I forgot my user ID. Can I register again?

A: No. If you are the EDS Captain of your organization, please contact the Department of Procurement Services at 312-744-4900. If you are an EDS team member, contact your EDS Captain, who can look up your user ID.

Q: Who is the EDS Captain?

A: The EDS Captain is a person who performs certain administrative functions for an organization which files an EDS. Each organization registered with the Online EDS has at least one EDS Captain. There may be co-captains, who are all equal. EDS Captains approve new users, change contact information for an organization and de-active accounts of employees who have left the organization. Please see the User Manual for more information.

Q: Why do we need EDS Captains?

A: The Online EDS is designed to be a self-service web application which allows those doing or seeking to do business with the City to perform as many routine functions as possible without City intervention. Because many organizations have multiple staff filing an EDS, the EDS Captain role allows those organizations to self-manage the contact information and users.

Q: Who is the EDS team?

A: The EDS team for an organization is everyone who is registered to file an EDS on behalf of the organization.

Q: I forgot my password. What should I do?

A: To retrieve a temporary password, click the "Forgot your password?" link on the login page. Enter your user ID that you provided when you registered your account. The system will automatically generate a temporary password and send it to you. When you log-in with your temporary password, you will be asked to create a new password.

Q: How do I complete an Online EDS?

A: Click on "Create New" after logging in. The Online EDS system will walk you through the EDS questions. Please see the User Manual for details.

Q: How do I fill out a Disclosure of Retained Parties?

A: There is no longer a separate Disclosure of Retained Parties filing. After logging in, click on "Create New". Answer (click) "Contract" to "Is this EDS for a contract or an EDS information update?" Click "Fill out EDS" and click on the "Retained Parties" tab. When finished, click on "Ready to Submit".

Q: How do I attach documents?

A: Attachments are discouraged. If at all possible, please provide a concise explanation in the space provided in the online form. Attachments with pages of officers are not acceptable. Names of officers must be typed into the system. If you must provide an attachment for another reason, please send it to your City of Chicago contact (contract administrator or negotiator for procurements) and they will attach it for you. Documents can be sent in PDF (preferred), Word or paper format.

Q: Who can complete an Economic Disclosure Statement online?

A: Any authorized representative of your business with a user ID and password can complete your EDS online. One person, such as an assistant, can fill in the information and save it and another person can review and electronically sign the Online EDS.

Q: What are the benefits of filing my Economic Disclosure statement electronically?

A: Filing electronically reduces the chance of filing an incomplete EDS and speeds up the processing of contract awards. A certificate of filing can be printed at the completion of the process and inserted into your bid package. The biggest benefit for those who frequently do business with the City is that after the first EDS, each EDS is much easier to fill out because non-contract specific information is pre-filled from the last submitted EDS.

Q: Will my information be secure?

A: Yes. When making your internet connection to our Web Server, you will connect through a Secure Socket Layer (SSL for short) to the "Online EDS" login page. All information you type will be protected using strong encryption. Within the login page, you will provide us with a user ID, password and secret question for user authentication, only you will have knowledge of this unique identification information.

Q: I am filing electronically. How do I sign my EDS?

A: Once you have completed the EDS, you will be prompted to enter your password and answer to your secret question. Together, these will serve as your electronic signature. Although you will also print and physically sign an EDS certification of filing as a notice that your EDS was filed, your EDS is complete as a legal document with only the electronic filing.

Q: My address has changed. How can I update my information?

A: You must be an EDS Captain for your organization to update this. Log-in and click on "Vendor Admin, Site Administration". Select the appropriate site and click edit.

Q: I have more questions. How can I contact the Department of Procurement Services?

A: Please contact the contract administrator or negotiator assigned to your solicitation or contract. You may call DPS at 312-744-4900 between 8:30 AM and 5:00 PM Central Time.

Q: Can I save a partially complete EDS?

A: Yes. Click "Save". To avoid data loss, we recommend you save your work periodically while filling out your EDS.

Q: Do I have to re-type my information each time I submit an EDS?

A: No. The system will remember non-contract specific information from your last submitted EDS for one year. This information will be filled-in for you in your new EDS. You will have an opportunity to correct it if it has changed since your last filing. When you submit your new EDS, the information is saved and the one-year clock begins running anew.

Q: What are the system requirements to use the Online EDS?

A: The following are minimum requirements to use the Online EDS:

- A PDF viewer such as Adobe Reader is installed and your web browser is configured to display PDFs automatically. You may download and install Adobe Reader free at www.adobe.comlproducts/reader/
- Your web browser is set to permit running of JavaScript.
- Your web browser allows cookies to be set for this site. Please note that while we use cookies in the Online EDS, we do not use them to track personally identifiable information, so your privacy is maintained.
- Your monitor resolution is set to a minimum of 1024 x 768.
- While not required to submit an EDS, if you wish to view the training videos, you must have Adobe Flash Plugin version 9 or higher, speakers and sound. Please note that very old computers may not be able to run Adobe Flash and will not be able to play the training videos. In that case, we encourage you to seek help using the Online EDS Manuals. You may download and install Adobe Flash Plugin free at htty://get.adobe.comiflashplayer

The Online EDS has been tested on Internet Explorer 6.0, 7.0, Firefox 2.0 and 3.0 on Windows XP and Mac OS X. Although it should work on other browsers and operating systems, the City of Chicago cannot guarantee compatibility.

ARTICLE 9. PROPOSAL PAGES

Proposal page(s) follow.

Remainder of page intentionally blank.

City of Chicago

Catalog RFQ - No Group Lines

RFQ Header Information

Please Respond By 8/25/2016
RFQ Number 5133
Ship To Location 084- CDOT RM400
For More Information Please Contact GARY BELL
312-744-9768

RFQ Description HELIX FOUNDATION POLE BASES AND HELIX FOUNDATION CABLE ANTI-THEFT DEVICES
Special Instructions
Your Quote is Effective as of 8/25/2016
RFQ Status In Process

Bid/Proposal pricing for all commodity and/or service line items must be based on the standard unit of measure indicated below. Pricing on alternate units of measure may not be accepted. Unit costs must be limited to three decimal places. Each quote must be signed and unit price, extended price and total price must be typed or written in ink.

Quotes on "or equal" items must be identified as "alternate" to specified item on the comment line. If quoting an alternate, indicate manufacturer name, model/part/catalog number and attach descriptive literature. Alternate items may not be accepted. Any exceptions to items specified or other terms must be clearly indicated on the bid.

RFQ Header Details

Contract Type COMMODITIES
Target Market NO
Advertise Date 7/25/2016
WEB BID Edit Rules ALL

Specification 134551
Procurement Type BID
Bid Deposit Required NO

Compliance Officer

Compliance Type Description

	Percentage Type Desc	Required %
No Compliance Plan Required	None	0.00 %

City of Chicago

Catalog RFQ - No Group Lines

Line No	Line Type	Item	Category	Commodity Desc	UOM	Estimated Usage	Price	Discount or Markup %	Extended Price	Catalog # / ID, Date and Mfr	Comments
1	Goods	5708456210	57084	POLE BASES, HELIX FOUNDATION. - 5 FOOT BASE WITH A 10 INCH BOLT CIRCLE PER DRAWING #936	Each	2500	$	(N/A)	$	(N/A)	
2	Goods	5708456220	57084	POLE BASES, HELIX FOUNDATION. - 5 FOOT BASE WITH A 13 INCH BOLT CIRCLE PER DRAWING #936	Each	250	$	(N/A)	$	(N/A)	
3	Goods	5708456230	57084	POLE BASES, HELIX FOUNDATION. - 7 FOOT BASE WITH A 10 INCH TO 15 INCH BOLT CIRCLE PER DRAWING #936	Each	2500	$	(N/A)	$	(N/A)	
4	Goods	5708456100	57084	POLE BASES, HELIX FOUNDATION. - CABLE ANTI - THEFT DEVICE - 10 INCH BOLT CIRCLE PER DRAWING 982	Each	2500	$	(N/A)	$	(N/A)	
5	Goods	5708456110	57084	POLE BASES, HELIX FOUNDATION. - CABLE ANTI - THEFT DEVICE - 15 INCH BOLT CIRCLE PER DRAWING 982	Each	2500	$	(N/A)	$	(N/A)	

Total Price $ _____

ARTICLE 10. BIDDER CONTACT INFORMATION

Person to contact regarding bid:

Name: _____ Phone: _____

Address: _____

_____

Indicate if you are:

Manufacturer: YES_____ NO_____

Exclusive dealer/distributor/reseller*: YES_____ NO_____

Authorized dealer/distributor/reseller*: YES_____ NO_____

* If an exclusive or authorized distributor of the proposed manufacturer, bidder must attach to the bid current written documentation from the proposed manufacturer verifying bidder's status.

Manufacturer's name: _____

Address: _____

_____

Phone: (_____)_____

Location of facility where inventory maintained: _____

_____

Bid Line: _____

Proposed Manufacturer and Model Number: _____

Exceptions (explain): _____

_____

_____

CITY-BASED BUSINESS AFFIDAVIT

The City-Based Business bid preference of 2%, as described in Section 2-92-412 of the Municipal Code of Chicago ("MCC") is applicable to competitively bid Contracts funded in whole by City funds. Bidder must complete this form, and provide a copy of its Chicago business license(s) if applicable, if it desires to be considered for this preference. Bidders that do not complete this page will not be regarded as City-Based Businesses. If bidder's operations are at multiple locations in the City of Chicago, use additional sheets if necessary. If this preference is allocated, the Local Goods Incentive described in described in MCC 2-92-410 will not be allocated to the same bid.

1. Is bidder a "City-Based Business" as defined in the Requirements for Bidding and Instructions for Bidders portion of this bid solicitation and in MCC 2-92-412?

   ( ) Yes ( ) No

2. Does the bidder report to the Internal Revenue Service that the place of employment for the majority (more than 50%) of its regular, full-time workforce is a facility within the City of Chicago?

   ( ) Yes ( ) No

3. Does the bidder conduct meaningful day-to-day business operations at a facility within the City of Chicago?

   ( ) Yes ( ) No

4. Street address of business location within the City of Chicago (P.O. address not accepted):

   _____

5. Describe the business activities are carried out at the location listed above: _____

   _____

6. How many full-time regular employees are currently employed at the location listed above? _____

7. Total number of full-time regular employees employed at all locations worldwide? _____

8. List City of Chicago business license(s) held; attach copies. If none are required, indicate "none required": _____

   _____

Bidder understands that it may be required to produce records to the chief procurement officer to verify the information provided.

Under penalty of perjury the person signing below: (1) warrants that he/she is authorized to execute this Affidavit on behalf of bidder, and (2) warrants that all certifications and statements contained in this Affidavit are true, accurate, and complete as of the date of execution.

Name of Bidder: _____
(Print or Type)
Signature of Authorized Officer: _____
(Signature)
Title of Signatory: _____
(Print or Type)
State of _____
County of _____
Signed and sworn (or affirmed) to before me on _____ (date) by
_____ (name/s of person/s making statement).

_____
(Signature of Notary Public)
(Seal)

BIDDER'S COMMITMENT TO PROVIDE LOCALLY MANUFACTURED GOODS AFFIDAVIT

The Locally Manufactured Goods Incentive as described in Section 2-92-410 of the Municipal Code of Chicago ("MCC") is applicable to competitively bid Contracts funded in whole by City funds. Bidder must submit this form with the bid, as well as a *Manufacturer's Affidavit of Local Manufacturing* for each local manufacturer from which goods will be sourced, if it desires to be considered for this bid incentive. Bidders that do not submit this page with their bid will not be regarded as providing locally manufactured goods. Attach additional sheets if necessary. If this incentive is allocated, the City Based Business Preference described in described in MCC 2-92-412 will not be allocated to the same bid.

Unless otherwise provided in the applicable bid solicitation, in order for an item to be considered Locally Manufactured Goods, more than 50% of the value of the item must be derived from manufacturing activities that occur within a city-based manufacturer's facility located within the City of Chicago.

Note: The CPO may request additional information or documentation before determining to apply the preference.

1. Contract title:_____ Specification #:_____

2. The value of Locally Manufactured Goods (as defined in MCC 2-92-410 and the applicable bid solicitation) that Bidder commits to provide will be what percentage of the total dollar value of the contract?

( ) 25% to 49%-- *1% incentive* ( ) 50% to 74%-- *1.5% incentive* ( ) 75% or greater-- *2% incentive*

3. Identify the bid lines under which Locally Manufactured Goods will be provided and their value, based on the bid specification's estimated quantities (attach additional sheets if necessary):

Bid Line #	**Locally Manufactured Item(s) to be provided**	**Manufacturer***	**Value of Item(s)**
			$
			$
			$
		TOTAL:	**$**

*Bidder must provide *Manufacturer's Affidavit of Local Manufacturing* for each manufacturer listed.

Bidder understands that if it fails to supply the committed percentage of Locally Manufactured Goods, under MCC 2-92-410 it may be fined in an amount equal to three times the amount of the difference between the bid incentive allocated and the bid incentive that would have been allocated to that contractor for the amount of locally manufactured goods actually supplied.

Bidder understands that it may be required to produce records to the chief procurement officer to verify the information provided.

Under penalty of perjury the person signing below: (1) warrants that he/she is authorized to execute this Affidavit on behalf of bidder, and (2) warrants that all certifications and statements contained in this Affidavit are true, accurate, and complete as of the date of execution.

Name of Bidder: _____
(Print or Type)

Signature of Authorized Officer: _____
(Signature)

Title of Signatory: _____
(Print or Type)

State of _____
County of _____
Signed and sworn (or affirmed) to before me on _____ (date) by
_____ (name/s of person/s making statement).

_____
(Signature of Notary Public)
(Seal)

LOCAL MANUFACTURING AFFIDAVIT

The Locally Manufactured Goods Incentive as described in Section 2-92-410 of the Municipal Code of Chicago ("MCC") is applicable to competitively bid Contracts funded in whole by City funds. Bidder must submit this form with the bid, in order to be considered for this bid incentive. Bidders that do not submit this page with their bid will not be regarded as providing locally manufactured goods. If goods will be manufactured by multiple manufacturers or at multiple facilities in the City of Chicago, submit an affidavit for each. Attach additional sheets if necessary. If this incentive is allocated, the City Based Business Preference described in described in MCC 2-92-412 will not be allocated to the same bid.

Note: The CPO may request additional information or documentation before determining to apply the preference.

1. Contract Title:_____ Specification #: _____

   Bidder/Contractor Name: _____

2. Is manufacturer a "City-Based Manufacturer" as defined in the Requirements for Bidding and Instructions for Bidders portion of this bid solicitation and in MCC 2-92-410? ( ) Yes ( ) No

3. Street address of manufacturing facility location within the City of Chicago (P.O. address not accepted):

   _____

4. Describe the manufacturing activities carried out at the location listed above: _____

   _____

5. List the goods to be manufactured at this facility manufacturer is prepared to provide to Bidder/Contractor, describe the production steps performed at the facility in the manufacture of each item, and the percentage of the item's value derived from manufacturing activities at this facility, and attach a catalog page, cut sheet, or product specification for each item:

   Item: _____ Production steps: _____ _____% of value

   Item: _____ Production steps: _____ _____% of value

6. List City of Chicago business license(s) held. If none are required, indicate "none required": _____

   _____

The undersigned commits to enter into a formal written agreement for supply with Bidder/Contractor, conditioned upon its execution of a contract with the City of Chicago to which the Locally Manufactured Goods Incentive is applied, within three (3) business days of its receipt of a signed contract from the City of Chicago.

The Bidder/Contractor understands that it may be required to produce records to the chief procurement officer to verify the information provided.

Under penalty of perjury the person signing below: (1) warrants that he/she is authorized to execute this Affidavit on behalf of bidder, and (2) warrants that all certifications and statements contained in this Affidavit are true, accurate, and complete as of the date of execution.

Name of Manufacturer: _____
(Print or Type)

Signature of Manufacturer Authorized Officer: _____
(Signature)

Title of Signatory: _____
(Print or Type)

State of _____
County of _____
Signed and sworn (or affirmed) to before me on _____ (date) by
_____ (name/s of person/s making statement).

_____
(Signature of Notary Public)
(Seal)

ELIGIBLE BUSINESS FOR BID INCENTIVE FOR ALTERNATIVELY POWERED VEHICLES AFFIDAVIT

If this is a competitively bid Contract funded in whole by City funds, an Eligible Business preference for alternatively powered vehicles may be applicable. Bidder must complete this form if it desires to be considered for this preference. Bidders who do not complete and submit this form with their bid will be deemed to be non-Eligible Businesses.

1. Is bidder a business located within the counties of Cook, DuPage, Kane, Lake, McHenry or Will in the State of Illinois (the "Six County Region")? ( ) Yes ( ) No

2. Street address of principal place of business: _____

_____

3. How many total vehicles, as defined in the Terms and Conditions, "Bid Incentive for Alternatively Powered Vehicles," are currently owned, operated, leased or otherwise controlled by bidder?

Line 3(a): _____

4. How many of bidder's vehicles are located and used within the Six County Region?

Line 4(a): number of vehicles _____

Line 4(b): percentage of fleet (line 4(a) divided by line 3(a)) _____%

5. How many of bidder's vehicles located and used within the Six County Region are alternatively powered vehicles, as defined in the Terms and Conditions, Bid Incentive for Alternatively Powered Vehicles?

Line 5(a): number of vehicles _____

Line 5(b): percentage of Six County fleet (line 5(a) divided by line 4(a)) _____%

Bidder understands that it may be required to produce records to the chief procurement officer to verify the information provided.

Under penalty of perjury the person signing below: (1) warrants that he/she is authorized to execute this Affidavit on behalf of bidder, and (2) warrants that all certifications and statements contained in this Affidavit are true, accurate, and complete as of the date of execution.

Name of Bidder: _____
(Print or Type)

Signature of Authorized Officer: _____
(Signature)

Title of Signatory: _____
(Print or Type)

State of _____
County of _____
Signed and sworn (or affirmed) to before me on _____ (date) by
_____ (name/s of person/s making statement).

_____
(Signature of Notary Public)
(Seal)

SMALL BUSINESS ENTERPRISE AND VETERAN-OWNED BUSINESS ENTERPRISE JOINT VENTURE AFFIDAVIT

Bidder must complete this form if it desires to be considered for the bid incentive as described in Section 2-92-418 of the Municipal Code of Chicago ("MCC") for joint ventures between Small Business Enterprises and Veteran-Owned Business Enterprises. Bidders that do not complete this page will not be regarded as eligible joint ventures. Please use additional sheets if necessary. Attach all relevant certifications and/or support documents.

1. Is bidder an "eligible joint venture" as defined in Section X of this bid solicitation and in MCC 2-92-418?

   ( ) Yes ( ) No

2. Is at least one member of the eligible joint venture a "small business enterprise" as defined in MCC 2-92-670?

   ( ) Yes ( ) No

3. Is at least one member of the eligible joint venture a "veteran-owned business enterprise as that term is defined in MCC 2-92-670?

   ( ) Yes ( ) No

4. Is the veteran-owned business identified above certified by the State of Illinois as a qualified service-disabled veteran-owned small business or a qualified veteran-owned small business pursuant to 30 ILCS 500/45-57? If yes, please provide appropriate documentation.

   ( ) Yes ( ) No

5. If the answer to # 4 above is no, is the veteran-owned business an enterprise which is at least 51 percent owned by one or more veterans, or in the case of a publicly held corporation, at least 51 percent of all classes of stock of which are owned by one or more veterans?

   ( ) Yes ( ) No

6. If qualifying as a veteran-owned business under the requirements of #5 above, please list all owners, their percentage of ownership interest, and provide appropriate documentation demonstrating status as veteran, as that term is defined in MCC 2-92-418.

_____

_____

_____

7. List City of Chicago business license(s) held. If none are required, indicate "none required": _____

_____

Bidder understands that it may be required to produce records to the chief procurement officer to verify the information provided.

Under penalty of perjury the person signing below: (1) warrants that he/she is authorized to execute this Affidavit on behalf of bidder, and (2) warrants that all certifications and statements contained in this Affidavit are true, accurate, and complete as of the date of execution.

Name of Joint Venture: _____
(Print or Type)

Signature of Authorized Officer for SBE: _____
(Signature)

Title of Signatory: _____
(Print or Type)

Signature of Authorized Officer for Veteran-Owned Business: _____
(Signature)

Title of Signatory: _____
(Print or Type)

State of _____

County of _____

Signed and sworn (or affirmed) to before me on _____ (date) by _____ (name/s of person/s making statement).

_____
(Signature of Notary Public)
(Seal)

SWEATSHOP-FREE PROCUREMENT AFFIDAVIT

Note: This affidavit is only to be completed only if this specification is for the purchase of garments pursuant to MCC 2-92-605 or is otherwise required by the specification documents.

In accordance with requirements set forth in section 2-92-605 of the Municipal Code of Chicago, Contractor warrants and promises that neither Contractor nor any of its subcontractors shall engage or otherwise utilize, in the performance of this contract, any supply chain that uses sweatshop labor as defined by Subsection 2-92-605.

Contractor understands that it may be required to produce records to the chief procurement officer to verify the information provided.

Under penalty of perjury the person signing below: (1) warrants that he/she is authorized to execute this Affidavit on behalf of Contractor, and (2) warrants that all certifications and statements contained in this Affidavit are true, accurate, and complete as of the date of execution.

Name of Bidder: _____
(Print or Type)

Signature of Authorized Officer: _____
(Signature)

Title of Signatory: _____
(Print or Type)

State of _____

County of _____

Signed and sworn (or affirmed) to before me on _____ (date) by

_____ (name/s of person/s making statement).

_____

(Signature of Notary Public)

(Seal)

ARTICLE 11. EXECUTION AND ACCEPTANCE PAGES

Bid execution and acceptance pages follow.

Remainder of page intentionally blank.

11.1. Bid Execution By a Corporation

The undersigned, hereby acknowledges having received Specification Number _____ containing a full set of Contract Documents, including, but not limited to, 1) Requirements for Bidding and Instructions to Bidders, 2) Standard Terms and Conditions - General Conditions, 3) Special Conditions for Supply Contracts, 4) Contract Plans or Drawings (if applicable) 5) Detailed Specifications, 6) Proposal Pages, 7) Certifications, and 8) Addenda Nos. (none unless indicated here) _____, and affirms that the corporation shall be bound by all the terms and conditions contained in the Contract Documents, regardless of whether a complete set thereof is attached to this proposal or bid, except only to the extent that the corporation has taken express written exception thereto in the sections of this specification designated for that purpose.

Under penalty of perjury, the undersigned: (1) warrants that he/she was authorized to submit an EDS on behalf of the Disclosing Party on-line; (2) warrants that all certifications and statements contained in the EDS are true, accurate and complete as of the date the EDS was submitted on-line; and (3) further warrants that, as of the date of submission of this proposal or bid, there have been no changes in circumstances since the date that the EDS was submitted that would render any certification in the EDS false, inaccurate or incomplete.

Further, the undersigned being duly sworn deposes and says on oath that no disclosures of ownership interests have been withheld and the information provided therein to the best of its knowledge is current and the undersigned has not entered into any agreement with any other Bidder (proposer) or prospective Bidder (proposer) or with any other person, firm or corporation relating to the price named in this proposal or any other proposal, nor any agreement or arrangement under which any act or omission in restraint of freedom of competition among Bidders (proposers) and has not disclosed to any person, firm or corporation the terms of this bid (proposal) or the price named herein.

Proposals must be submitted with original signatures in the space provided. Proposals not properly signed will be rejected.

NAME OF CORPORATION: _____
(Print or Type)

SIGNATURE OF PRESIDENT*: _____
(Or Authorized Officer) (Signature)

TITLE OF SIGNATORY: _____
(Print or Type)

BUSINESS ADDRESS: _____
(Print or Type)

*Note: In the event that this bid (proposal) is signed by other than the President, attach hereto a certified copy of that section of Corporate By-Laws or other authorization, such as a resolution by the Board of Directors, which permits the person to sign the offer for the Corporation.

ATTEST: _____
(Corporate Secretary Signature) (Affix Corporate Seal)

State of _____ County of _____

This instrument was acknowledged before me on this _____ day of _____, 20___ by _____ as President (or other authorized officer) and _____ as Secretary of _____ (Corporation Name).

(Seal)

_____ Commission Expires: _____
Notary Public Signature

11.2. Bid Execution By A Joint Venture

The undersigned, hereby acknowledges having received Specification Number _____ containing a full set of Contract Documents, including, but not limited to, 1) Requirements for Bidding and Instructions to Bidders, 2) Standard Terms and Conditions - General Conditions, 3) Special Conditions for Supply Contracts, 4) Contract Plans or Drawings (if applicable) 5) Detailed Specifications, 6) Proposal Pages, 7) Certifications, and 8) Addenda Nos. (none unless indicated here) _____, and affirms that the Joint Venture shall be bound by all the terms and conditions contained in the Contract Documents, regardless of whether a complete set thereof is attached to this proposal, except only to the extent that the Joint Venture has taken express written exception thereto in the sections of this specification designated for that purpose.

Under penalty of perjury, the undersigned: (1) warrants that he/she was authorized to submit an EDS on behalf of the Disclosing Party on-line; (2) warrants that all certifications and statements contained in the EDS are true, accurate and complete as of the date the EDS was submitted on-line; and (3) further warrants that, as of the date of submission of this proposal or bid, there have been no changes in circumstances since the date that the EDS was submitted that would render any certification in the EDS false, inaccurate or incomplete.

Further, the undersigned being duly sworn deposes and says on oath that no disclosures of ownership interests have been withheld and the information provided therein to the best of its knowledge is current and the undersigned has not entered into any agreement with any other Bidder (proposer) or prospective Bidder (proposer) or with any other person, firm or corporation relating to the price named in this proposal or any other proposal, nor any agreement or arrangement under which any act or omission in restraining of free competition among Bidders (proposers) and has not disclosed to any person, firm or corporation the terms of this bid (proposal) or the price named herein.

Proposals must be submitted with original signatures in the space provided. Proposals not properly signed will be rejected.

JOINT VENTURE NAME: (Print or Type) _____

JOINT VENTURE ADDRESS: (Print or Type) _____
If you are operating under an assumed name, provide County registration number herein under as provided in the Illinois Revised Statutes 1965 Chapter 96 Sec. 4 et seq. Registration Number: _____

SIGNATURES AND ADDRESSES OF ALL MEMBERS OF THE JOINT VENTURE (If all members of the Joint Venture do not sign, indicate authority of signatories by attaching copy of Joint Venture agreement or other authorizing document):

SIGNATURE OF Authorized Party: (Signature) _____

TITLE OF SIGNATORY: (Print or Type) _____

BUSINESS ADDRESS: (Print or Type) _____

ATTEST: (Joint Venture Secretary Signature) _____
(Affix Joint Venture Seal)

OR

Joint Venturer Signature: (Signature) _____

Address: (Print or Type) _____

Joint Venturer Signature: (Signature) _____

Address: (Print or Type) _____

Joint Venturer Signature: (Signature) _____

Address: (Print or Type) _____

State of _____ County of _____

This instrument was acknowledged before me on this _____ day of _____, 20___ by _____ as President (or other authorized officer) and _____ as Secretary of _____ (Corporation Name).

Notary Public Signature: _____

Commission Expires: _____ (Seal)

11.3. Bid Execution By A Partnership

The undersigned, hereby acknowledges having received Specification Number _____ containing a full set of Contract Documents, including, but not limited to, 1) Requirements for Bidding and Instructions to Bidders, 2) Standard Terms and Conditions - General Conditions, 3) Special Conditions for Supply Contracts, 4) Contract Plans or Drawings (if applicable) 5) Detailed Specifications, 6) Proposal Pages, 7) Certifications, and 8) Addenda Nos. (none unless indicated here) _____, and affirms that the partnership shall be bound by all the terms and conditions contained in the Contract Documents, regardless of whether a complete set thereof is attached to this proposal, except only to the extent that the partnership has taken express written exception thereto in the sections of this specification designated for that purpose.

Under penalty of perjury, the undersigned: (1) warrants that he/she was authorized to submit an EDS on behalf of the Disclosing Party on-line; (2) warrants that all certifications and statements contained in the EDS are true, accurate and complete as of the date the EDS was submitted on-line; and (3) further warrants that, as of the date of submission of this proposal or bid, there have been no changes in Circumstances since the date that the EDS was submitted that would render any certification in the EDS false, inaccurate or incomplete.

Further, the undersigned being duly sworn deposes and says on oath that no disclosures of ownership interests have been withheld and the information provided therein to the best of its knowledge is current and the undersigned has not entered into any agreement with any other Bidder (proposer) or prospective Bidder (proposer) or with any other person, firm or corporation relating to the price named in this proposal or any other proposal, nor any agreement or arrangement under which any act or omission in restraining of free competition among Bidders (proposers) and has not disclosed to any person, firm or corporation the terms of this bid (proposal) or the price named herein.

Proposals must be submitted with original signatures in the space provided. Proposals not properly signed will be rejected.

BUSINESS NAME: (Print or Type) _____

BUSINESS ADDRESS: (Print or Type) _____

If you are operating under an assumed name, provide County registration number herein under as provided in the Illinois Revised Statutes 1965 Chapter 96 Sec. 4 et seq. Registration Number: _____

SIGNATURES AND ADDRESSES OF ALL MEMBERS OF THE PARTNERSHIP
(If all General Partners do not sign, indicate authority of partner signatories by attaching copy of partnership agreement or other authorizing document):
Partner Signature: (Signature) _____

Address: (Print or Type) _____

Partner Signature: (Signature) _____

Address: (Print or Type) _____

Partner Signature: (Signature) _____

Address: (Print or Type) _____

State of _____; County of _____

This instrument was acknowledged before me on this _____ day of _____, 20___ by _____ as President (or other authorized officer)

and _____ as Secretary of _____ (Corporation Name).

Notary Public Signature: _____

Commission Expires: _____ (Seal)

11.4. Bid Execution By a Sole Proprietor

The undersigned, hereby acknowledges having received Specification Number _____ containing a full set of Contract Documents, including, but not limited to, 1) Requirements for Bidding and Instructions to Bidders, 2) Standard Terms and Conditions - General Conditions, 3) Special Conditions for Supply Contracts, 4) Contract Plans or Drawings (if applicable) 5) Detailed Specifications, 6) Proposal Pages, 7) Certifications, and 8)) Addenda Nos. (none unless indicated here) _____, and affirms that the sole proprietor shall be bound by all the terms and conditions contained in the Contract Documents, regardless of whether a complete set thereof is attached to this proposal, except only to the extent that the sole proprietor has taken express written exception thereto in the sections of this specification designated for that purpose.

Under penalty of perjury, the undersigned: (1) warrants that he/she was authorized to submit an EDS on behalf of the Disclosing Party on-line; (2) warrants that all certifications and statements contained in the EDS are true, accurate and complete as of the date the EDS was submitted on-line; and (3) further warrants that, as of the date of submission of this proposal or bid, there have been no changes in
Circumstances since the date that the EDS was submitted that would render any certification in the EDS false, inaccurate or incomplete.

Further, the undersigned being duly sworn deposes and says on oath that no disclosures of ownership interests have been withheld and the information provided therein to the best of its knowledge is current and the undersigned has not entered into any agreement with any other Bidder (proposer) or prospective Bidder (proposer) or with any other person, firm or corporation relating to the price named in this proposal or any other proposal, nor any agreement or arrangement under which any act or omission in restraining of free competition among Bidders (proposers) and has not disclosed to any person, firm or corporation the terms of this bid (proposal) or the price named herein.

Proposals must be submitted with original signatures in the space provided. Proposals not properly signed will be rejected.

SIGNATURE OF PROPRIETOR: _____
(Signature)

DOING BUSINESS AS: _____
(Print or Type)

Business Address: _____
(Print or Type)

_____
(Print or Type)

If you are operating under an assumed name, provide County registration number herein under as provided in the Illinois Revised Statutes 1965 Chapter 96 Sec. 4 et seq.

Registration Number: _____
(Print or Type)

State of _____; County of _____

This instrument was acknowledged before me on this _____ day of _____, 20___ by _____ as President (or other authorized

officer) and _____ as Secretary of _____ (Corporation Name)._____

_____

Notary Public Signature: _____

Commission Expires: _____ (Seal)

11.5. Bid Acceptance by City

Contract No.: _____

Specification No.: _____

Vendor Name: _____

Total Amount (Value): _____

Fund Chargeable: _____

The undersigned, on behalf of the CITY OF CHICAGO, a municipal corporation of the State of Illinois, hereby accept the foregoing bid items as identified in the proposal.

CITY OF CHICAGO

_____

Mayor Date

_____

Comptroller Date

_____

Chief Procurement Officer Date

EXHIBITS

Exhibits follow this page. Remainder of page intentionally blank.

Exhibit 1: Insurance Certificate of Coverage

Named Insured:_____ Specification #: _____
Address:_____ RFP:_____
(Number and Street) Project #:_____
_____ Contract #:_____
(City) (State) (ZIP)

Description of Operation/Location	

The insurance policies and endorsements indicated below have been issued to the designated named insured with the policy limits as set forth herein covering the operation described within the contract involving the named insured and the City of Chicago. The Certificate issuer agrees that in the event of cancellation, non-renewal or material change involving the indicated policies, the issuer will provide at least sixty (60) days prior written notice of such change to the City of Chicago at the address shown on this Certificate. This certificate is issued to the City of Chicago in consideration of the contract entered into with the named insured, and it is mutually understood that the City of Chicago relies on this certificate as a basis for continuing such agreement with the named insured:

Type of Insurance	Insurer Name	Policy Number	Expiration Date	Limits of Liability All Limits in Thousands
General Liability [ ] Claims made [ ] Occurrence [ ] Premise-Operations [ ] Explosion/Collapse Underground [ ] Products/Completed-Operations [ ] Blanket Contractual [ ] Broad Form Property Damage [ ] Independent Contractors [ ] Personal Injury [ ] Pollution				CSL Per Occurrence $ _____ General Aggregate $ _____ Products/Completed Operations Aggregate $ _____
Automobile Liability				CSL Per Occurrence $ _____
[ ] Excess Liability [ ] Umbrella Liability				Each Occurrence $ _____
Worker=s Compensation and Employer=s Liability				Statutory/Illinois Employers Liability $ _____
Builders Risk/Course of Construction				Amount of Contract
Professional Liability				$ _____
Owner Contractors Protective				$ _____
Other				$ _____

a) Each Insurance policy required by this agreement, excepting policies for worker=s compensation and professional liability, will read: AThe City of Chicago is an additional insured as respects operations and activities of, or on behalf of the named insured, performed under contract with or permit from the City of Chicago.@
b) The General, Automobile and Excess/Umbrella Liability Policies described provide for severability of Interest (cross liability) applicable to the named insured and the City.
c) Workers Compensation and Property Insurers shall waive all rights of subrogation against the City of Chicago.
d) The receipt of this certificate by the City does not constitute agreement by the City that the insurance requirements in the contract have been fully met, or that the insurance policies indicated by this certificate are in compliance with all contract requirements.

Name and Address of Certificate Holder and Recipient of Notice

Certificate Holder/Additional Insured
City of Chicago
Procurement Department
121 N. LaSalle St., #806
Chicago, IL 60602

Signature of Authorized Rep. _____
Agency/Company: _____
Address _____
Telephone _____

For City use only
Name of City Department requesting certificate: (Using Dept.) _____
Address: _____ ZIP Code: _____Attention: _____

Exhibit 2: Detailed Specification for Helix Foundation Poles #1526 and Helix Foundations Cable Anti-Theft Device #1593

ELECTRICAL SPECIFICATION 1526
DIVISION OF ENGINEERING
DEPARTMENT OF TRANSPORTATION
CITY OF CHICAGO
REVISED JUNE 12, 2014

HELIX FOUNDATIONS

SUBJECT

1. This specification covers the requirements for steel helix foundations. These foundations may be used to support street light poles for both residential and arterial streets. They may also be used to support aluminum traffic signal posts. They may not be used for any combination poles that support both street lighting and traffic signals, or any traffic signal poles that support monotube arms.

GENERAL

2. (a) Specifications. The foundations must conform in detail to the requirements herein stated and to the specifications and methods of test of the American Society for Testing and Materials cited by ASTM Designation Number of which the most recently published revision will govern.

   (b) Acceptance. Foundations not conforming to this specification will not be accepted.

   (c) Drawings. The drawings mentioned herein are drawings of the Department of Transportation. They are integral parts of this specification cooperating to state necessary requirements.

   (d) Bidders Drawings. The apparent low bidder must submit detailed scale drawings of the foundations showing actual dimensions, details, and welds, if so requested. Shop drawings must be original engineering drawings created by the manufacturer. The drawings must give every dimension necessary to show how the foundation will function and how the pole or post will be mounted. These drawings must be submitted in electronic format, preferably Microstation 95, if so requested by the City.

   (e) Sample. One complete foundation of each size and of the manufacture intended to be furnished must be submitted within fifteen (15) business days upon request of the Chief Procurement Officer.

(f) Warranty. The manufacturer must warrant the performance and construction of the foundations to meet the requirements of this specification and must warrant all parts, components, and appurtenances against defects due to design, workmanship, or material developing within a period of three years after the foundations have been accepted by the City. This will be interpreted particularly to mean structural or mechanical failure of any element or weld, or failure of any portion of the galvanizing system. The warranty must be furnished in writing guaranteeing material replacement including shipment, free of charge to the City. The Commissioner will be the sole judge in determining which replacements are to be made and the Commissioner's decision will be final.

DESIGN

3. (a) Material. Steel must meet or exceed the requirements of ASTM A36. The shaft may be ASTM A53 Grade B, ASTM A252 Grade 2 or ASTM A36.

(b) Dimensions. Each foundation must be dimensioned as shown on Standard Drawing 936. There are three types of foundations; a five foot foundation with a 13 inch bolt circle for three anchor bolts, a five foot foundation with a ten inch bolt circle for four anchor bolts, and a seven foot foundation with a ten to fifteen inch bolt circle for four anchor bolts.

(c) Construction. Each foundation must have a shaft .250 inches thick with an outside diameter of 8-5/8 inches. The base plate must be 1 inch thick The shaft must extend 1 inch into the base plate and be circumferentially welded top and bottom. The base plate must be even and flat on top with no sharp edges. The top of the base plate must be clearly and permanently marked to indicate the cableway orientation. The helix screw plate must be fabricated from a 3/8 inch thick 14 inch diameter circle of steel formed to a 3 inch pitch. The pilot point must extend 9 inches below the screw plate. The leading end of the pilot must be rounded, diamond shape, or chisel shaped. The pilot point must be welded concentric with the axis of the foundation. The cableways must be 3 inches wide by 18 inches long and be located as indicated on Standard Drawing 936. There must be no sharp edges on the cableway openings.

After fabrication, the complete foundation must be hot dipped galvanized in accordance with the provisions of ASTM A123, Grade B. This requires a zinc coating equal to 2 ounces per square foot. Touch up of small areas using a cold zinc rich coating or a cold galvanized coating is not permitted.

WELDING

4. (a) Standards. Every weld must be made in conformity with the American

Welding Society. Each bidder must submit with his proposal a drawing showing the sizes and types of welds, must state the type of electrode, and must describe the welding methods he proposes to employ in fabricating the foundations.

(b) Testing. The welds must be inspected for penetration and soundness by the magnetic particle inspection method or by radiography. If the magnetic inspection process is used, the dry method with direct current must be employed.

TESTING

5. (a) The foundations must be capable of withstanding 10000 foot-pounds of torque applied about the main axis.

(b) The manufacturer must certify the type of steel used to form the foundations.

(c) The manufacturer must certify that the welds have been properly tested.

PACKAGING

6. (a) General. The foundations must be packaged so as not to incur any damage during shipping and unloading. Materials such as lumber (2"x4" min.), non-marring banding, and other appropriate bundling materials must be used to make a rigid, long lasting, bundle capable of being handled , shipped and stored without shifting or breaking of the contents. Each bundle must be capable of being lifted by a fork lift truck and the bundles must be shipped in a flat bed truck to facilitate unloading.

(b) All devices will be delivered to the Division of Electrical Operations at 2451 South Ashland Avenue in Chicago IL 60608, or to another location within the City, all in accordance with the terms and conditions of this Contract, or as indicated on the purchase order.

ELECTRICAL SPECIFICATION 1593
DIVISION OF ENGINEERING
DEPARTMENT OF TRANSPORTATION
CITY OF CHICAGO
REVISED FEBRUARY 11, 2015

CABLE ANTI-THEFT DEVICE FOR HELIX FOUNDATIONS

SUBJECT

1. This specification covers the requirements for a cable anti-theft device to be used with steel helix foundations with either ten inch diameter bolt circles or fifteen inch diameter bolt circles. The device will secure the cable so as to prevent removal of the cable without removing the pole first.

GENERAL

2. (a) Specifications. The devices must conform in detail to the requirements herein stated and to the specifications and methods of test of the American Society for Testing and Materials cited by ASTM Designation Number of which the most recently published revision will govern.

   (b) Acceptance. Devices not conforming to this specification will not be accepted.

   (c) Drawings. The drawing mentioned herein is a drawing of the Department of Transportation, and is an integral part of this specification.

   (d) Bidders Drawings. If requested, the apparent low bidder must submit detailed scale drawings of the device showing actual dimensions, details, and welds. Shop drawings must be original engineering drawings created by the manufacturer. The drawings must give every dimension necessary to show how the device will function. These drawings must be submitted in electronic format, preferably Microstation 95, if so requested by the City.

   (e) Sample. One complete device of the manufacture intended to be furnished must be submitted within fifteen (15) business days upon request of the Chief Procurement Officer.

   (f) Warranty. The manufacturer must warrant the performance and construction of the devices to meet the requirements of this specification and must warrant all parts, components, and appurtenances against defects due to design,

workmanship, or material developing within a period of three years after the devices have been accepted by the City. This will be interpreted particularly to mean structural or mechanical failure of any element or weld, or failure of any portion of the painting system. The warranty must be furnished in writing guaranteeing material replacement including shipment, free of charge to the City. The Commissioner will be the sole judge in determining which replacements are to be made and the Commissioner's decision will be final.

DESIGN

3. (a) Material. Steel must meet or exceed the requirements of ASTM A36.

(b) Construction. Each device must be dimensioned as shown on Standard Drawing 982. All parts shown on the standard drawing must be supplied as part of this specification.

The device must be powder coated silver or black, as directed on the order.

The clamping device shall be constructed so that cables can only be clamped or un-clamped when the pole is not in place. When the pole is in place the clamping mechanism shall not be accessible. The clamping device can only be installed after the cable is pulled and before the pole is set. When installed, the device and the clamping mechanism shall have a great enough strength that when a pulling force is applied to the cable, the cable will break before it will slip through the device.

Any similar device, other than that shown in Standard Drawing 982, may be considered. The City will be the final judge as to whether a device meets the intent of this specification.

WELDING

4. (a) Standards. Every weld must be made in conformity with the American Welding Society. If so requested, the apparent low bidder must submit a drawing showing the sizes and types of welds, must state the type of electrode, and must describe the welding methods he proposes to employ in fabricating the devices.

TESTING

5. (a) The welds must be inspected for penetration and soundness by the magnetic particle inspection method or by radiography. If the magnetic inspection process is used, the dry method with direct current must be employed.

(b) The manufacturer must certify the type of steel used to form the devices.

PACKAGING

6. (a) General. The devices must be packaged so as not to incur any damage during shipping and unloading. Materials such as lumber (2"x4" min.), non-marring banding, and other appropriate bundling materials must be used to make a rigid, long lasting, bundle capable of being handled , shipped and stored without shifting or breaking of the contents. Each bundle must be capable of being lifted by a fork lift truck and the bundles must be shipped in a flat bed truck to facilitate unloading.

(b) All devices will be delivered to the Division of Electrical Operations at 2451 South Ashland Avenue in Chicago IL 60608, or to another location within the City, all in accordance with the terms and conditions of this Contract, or as indicated on the purchase order.

<u>Exhibit 3:</u> Drawings For Helix Foundation Poles #936 And Helix Foundation Cable Anti-Theft Devices #982

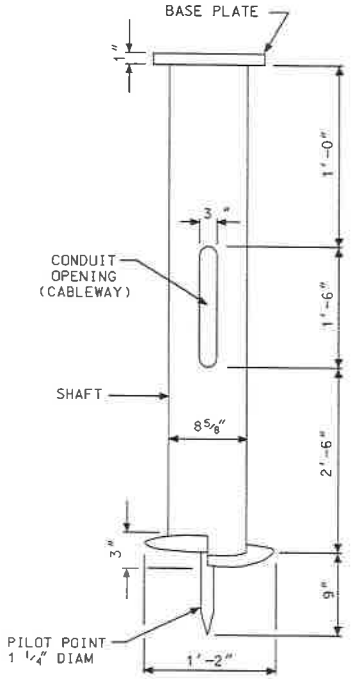

5' FOUNDATION

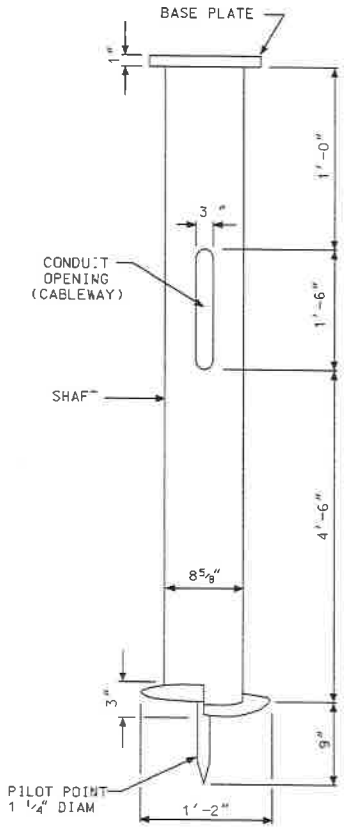

7' FOUNDATION

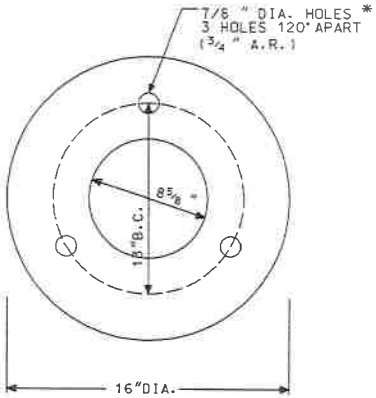

BASE PLATE
5 FOOT FOUNDATION
13" BOLT CIRCLE

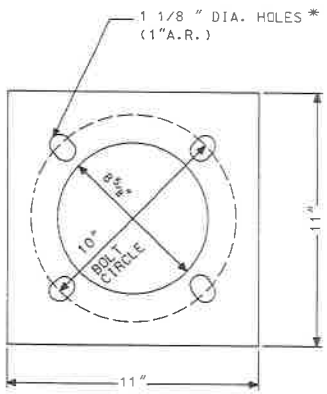

BASE PLATE
5 FOOT FOUNDATION
10" BOLT CIRCLE

* HOLES IN BASE PLATE MAY BE RADIALLY SLOTTED

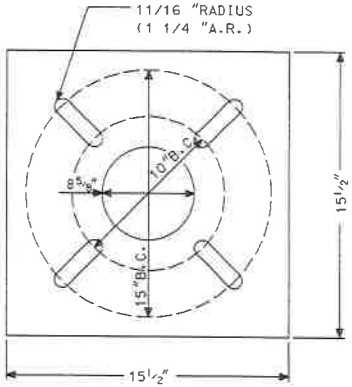

BASE PLATE
7 FOOT FOUNDATION
10"-15" BOLT CIRCLE

NOTES:

1. SHAFT MUST HAVE 1/4 " WALL AND HAVE 8 5/8 " OUTSIDE DIAMETER.
2. SHAFT MATERIAL MUST BE ASTM A53B STEEL PIPE OR LATEST REVISION.
3. HELIX MUST BE FORMED BY MATCHING METAL DIE.
4. HELIX MATERIAL MUST BE ASTM A709 GR 36 OR LATEST REVISION.
5. HELIX MUST HAVE 3 INCH PITCH.
6. PILOT POINT MATERIAL WILL BE ASTM A36 STEEL OR LATEST REVISION.
7. BASE PLATE MATERIAL WILL BE ASTM A36 STEEL.
8. ENTIRE STEEL FOUNDATION TO BE HOT DIP GALVANIZED PER ASTM A123 OR LATEST REVISION .
9. BASE PLATE MUST BE PERMANENTLY STAMPED WITH MANUFACTURER'S NAME, MANUFACTURING DATE, AND PRODUCT IDENTIFICATION.
10. BASE PLATE MUST BE PERMANENTLY MARKED ON TOP INDICATING CONDUIT OPENING ORIENTATION.

	REVISION	DATE
A		

HELIX LIGHT POLE FOUNDATIONS

CITY OF CHICAGO

DWG. NO. 936

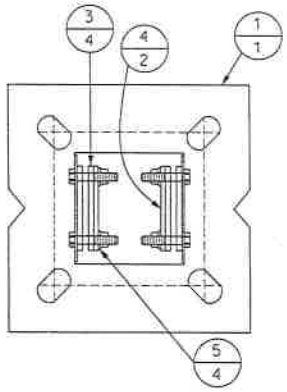

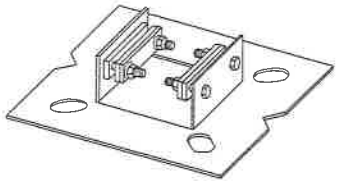

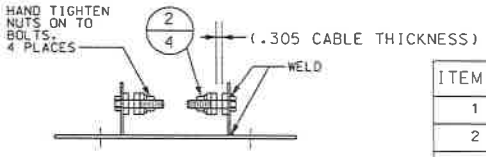

ANTI THEFT PLATE ASSEMBLY

ITEM #	QTY	DESCRIPTION
1	1	ANTI THEFT PLATE W/ WELDED STUDS
2	4	3/8 - 16 SS NUT
3	4	GASKET
4	2	ANTI THEFT BAR
5	4	WASHER

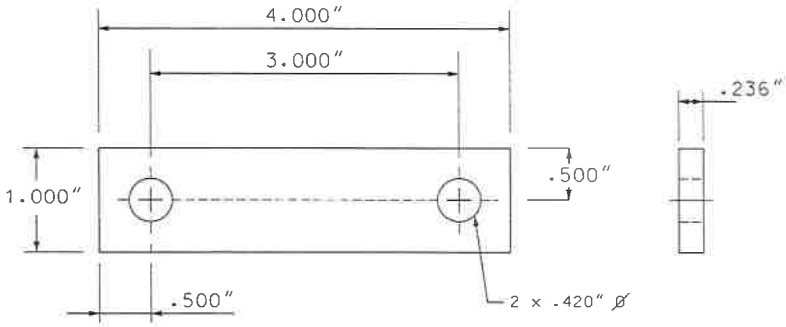

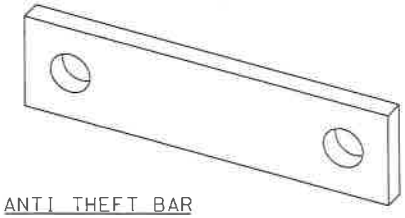

ANTI THEFT BAR

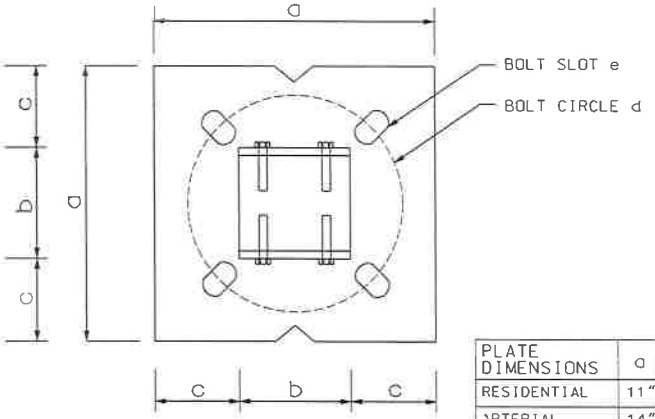

PLATE DIMENSIONS	a	b	c	d	e
RESIDENTIAL	11"	5.25"	2.875"	10"-11"	1.25" x 1.75"
ARTERIAL	14"	5.25"	4.375"	14"-15"	1.40" x 2.00"

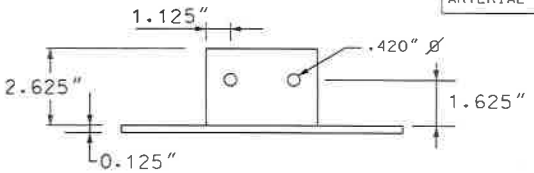

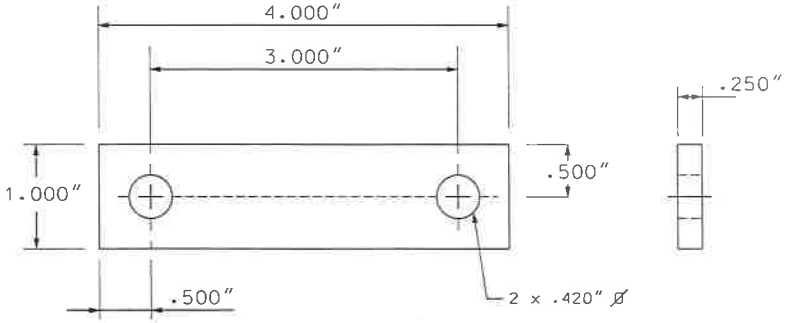

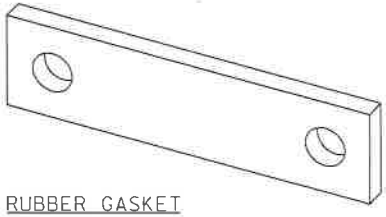

RUBBER GASKET

R	DATE	REVISION

CABLE ANTI-THEFT DEVICE
FOR
HELIX FOUNDATIONS

CITY OF CHICAGO
DEPARTMENT OF TRANSPORTATION
DIVISION OF ENGINEERING

DRAFTSMAN/ENGINEER :	G.M.PADIYAR	DWG. NO.
SUP. ENGINEER/PM :	O.LETAMENDI	
PROFESSIONAL ENGINEER :	R.POOL	982
ENGINEER OF ELECTRICITY		
DEPUTY COMMISSIONER:		

SIZE: 16" | 22" SCALE: NONE DATE: 01/27/2015