CITY OF CHICAGO

LORI E. LIGHTFOOT, MAYOR

DEPARTMENT OF WATER MANAGEMENT

RANDY CONNER, COMMISSIONER

BUREAU OF ENGINEERING SERVICES
SEWER SECTION

WILLIAM CHEAKS, MANAGING DEPUTY COMMISSIONER

PROJECT NO 7500

W 58TH ST FROM S MOBILE AV TO S NASHVILLE AV

S NARRAGANSETT AV FROM W 58TH ST TO W 59TH ST

S NATOMA AV FROM W 57TH ST TO W 58TH ST

W 58TH ST FROM S NATOMA AV TO S NOTTINGHAM AV

PROJECT NO 7445

W 44TH PL FROM S PRINCETON AV TO S SHIELDS AV

S SHIELDS AV FROM W 44TH PL TO W 45TH ST

S PARNELL AV FROM W 44TH ST TO W 43RD PL



SEWER IMPROVEMENT PROGRAM

PN 7500: OUC EFP-102974
PN 7445: OUC EFP-106072

FILE NAME = $FILE$
PLOT DATE = $DATE$
USER NAME = $USER$

ITEM NO.	DESCRIPTION	UNIT	TOTAL QUANTITY
1	ENGINEER'S FIELD OFFICE	CAL MO	11
2	MOBILIZATION	LSUM	1
3	PROJECT SIGNS	EACH	8
4	TRAFFIC CONTROL AND PROTECTION	CAL DAY	330
5	CHANGEABLE MESSAGE SIGN	CAL DAY	330
6	MAINTAIN EXISTING LIGHTING SYSTEM	LSUM	1
7	TEMPORARY PAVEMENT MARKING - LINE 4"	FOOT	3,652
8	PAVEMENT MARKING REMOVAL	SQ FT	1,450
9	TEMPORARY CONCRETE BARRIER	FOOT	1,580
10	RELOCATE TEMPORARY CONCRETE BARRIER	FOOT	294
11	IMPACT ATTENUATORS, TEMPORARY (NON- REDIRECTIVE), TEST LEVEL 2	EACH	2
12	IMPACT ATTENUATORS, RELOCATE (NON- REDIRECTIVE), TEST LEVEL 2	EACH	2
13	SEWER, 18", DUCTILE IRON PIPE, CLASS 52, IN OPEN CUT	LF	12
14	SEWER, 24", REINFORCED CONCRETE PIPE, CLASS III, IN OPEN CUT	LF	2,743
15	SEWER, 30", REINFORCED CONCRETE PIPE, CLASS III, IN OPEN CUT	LF	666
16	SEWER, 36", REINFORCED CONCRETE PIPE, CLASS III, IN OPEN CUT	LF	1,333
17	SEWER, 42", REINFORCED CONCRETE PIPE, CLASS III, IN OPEN CUT	LF	1,300
18	SEWER, 48", REINFORCED CONCRETE PIPE, CLASS III, IN OPEN CUT	LF	664
19	SEWER, 54", REINFORCED CONCRETE PIPE, CLASS III, IN OPEN CUT	LF	657
20	SEWER, 42", REINFORCED CONCRETE PIPE, CLASS IV, IN OPEN CUT	LF	16
21	SEWER, 29"X45", REINFORCED CONCRETE ELIPITCAL PIPE, CLASS III, IN OPEN CUT	LF	8
22	SEWER, TRANSITION 36-INCH ROUND TO 29"X45" ELLIPTICAL, REINFORCED CONCRETE PIPE, CLASS III, IN OPEN CUT	LF	8
23	DRAIN CONNECTION .6", VITRIFIED CLAY PIPE	LF	538
24	DRAIN CONNECTION .8", VITRIFIED CLAY PIPE	LF	486
25	DRAIN CONNECTION .10", VITRIFIED CLAY PIPE	LF	77
26	DRAIN CONNECTION .12", VITRIFIED CLAY PIPE	LF	18
27	DRAIN CONNECTION .15", VITRIFIED CLAY PIPE	LF	65
28	DRAIN CONNECTION .18", VITRIFIED CLAY PIPE	LF	207
29	DRAIN CONNECTION .24", REINFORCED CONCRETE PIPE	LF	31
30	DRAIN CONNECTION .42", REINFORCED CONCRETE PIPE	LF	11
31	DRAIN CONNECTION .6", DUCTILE IRON PIPE	LF	547
32	DRAIN CONNECTION .8", DUCTILE IRON PIPE	LF	213
33	DRAIN CONNECTION .18", DUCTILE IRON PIPE	LF	12
34	MANHOLES, TYPE A, 3' DIAMETER	EACH	4
35	MANHOLES, TYPE B, 4' DIAMETER	EACH	3

ITEM NO.	DESCRIPTION	UNIT	TOTAL QUANTITY
36	MANHOLES, TYPE B, 5' DIAMETER	EACH	18
37	MANHOLES, MODIFIED TYPE B, 4'-DIAMETER	EACH	1
38	MANHOLES, TYPE C SINGLE DROP	EACH	2
39	MANHOLES, TYPE C DOUBLE DROP	EACH	1
40	78" X 42" TEE WITH RISER, 58TH AND MOBILE	EACH	1
41	TUMBLING BASIN, 48 INCH DIAMETER	EACH	1
42	TUMBLING BASIN, 60 INCH DIAMETER	EACH	1
43	EXISTING STRUCTURE MODIFICATION AT 57TH AND NATOMA	EACH	1
44	PARTIAL REMOVAL OF UNDERGROUND STRUCTURES	CU YD	7
45	CONCRETE COLLAR	CU YD	19
46	REINFORCEMENT BARS, EPOXY COATED	POUND	2,275
47	DRILL AND GROUT DOWEL AND TIE BARS	EACH	7,156
48	CATCH BASINS	EACH	27
49	STANDARD INLETS	EACH	2
50	CHICAGO STANDARD FRAME	EACH	114
51	CHICAGO STANDARD LID	EACH	114
52	SOIL BORING	EACH	6
53	WASTE CHARACTERIZATION ANALYSIS	EACH	38
54	TRENCH BACKFILL	CU YD	23,089
55	EARTH EXCAVATION	CU YD	432
56	SPECIAL SOILS WASTE REMOVAL AND DISPOSAL	CU YD	50
57	STABILIZATION STONE	TON	529
58	TEMPORARY STONE	TON	50
59	TEMPORARY COLD PATCH	TON	50
60	PORTLAND CEMENT CONCRETE BASE COURSE, VARIABLE THICKNESS	CU YD	2,181
61	PORTLAND CEMENT CONCRETE BASE COURSE (HIGH EARLY STRENGTH), VARIABLE THICKNESS	CU YD	213
62	BITUMINOUS PAVEMENT SURFACE REMOVAL, 2" AND LESS	SQ YD	19,788
63	CONCRETE PAVEMENT SURFACE REMOVAL, 2" AND LESS	SQ YD	8,147
64	SUBBASE GRANULAR MATERIAL, TYPE B 4"	SQ YD	693
65	SUBBASE GRANULAR MATERIAL, TYPE B 6"	SQ YD	9,077
66	PAVEMENT REMOVAL	SQ YD	2,384
67	DRIVEWAY AND ALLEY PAVEMENT REMOVAL	SQ YD	116
68	CURB REMOVAL	LF	74
69	COMBINATION CURB AND GUTTER REMOVAL	LF	1,742
70	SIDEWALK AND ADA RAMP REMOVAL	SQ FT	12,879

ITEM NO.	DESCRIPTION	UNIT	TOTAL QUANTITY
71	COMBINATION CURB AND GUTTER, TYPE B-V.12	LF	1,742
72	CONCRETE CURB, TYPE B	LF	74
73	PORTLAND CEMENT CONCRETE SIDEWALK - 5-INCH	SQ FT	3,229
74	PORTLAND CEMENT CONCRETE ADA RAMP - 5-INCH	SQ FT	9,217
75	PORTLAND CEMENT CONCRETE DRIVEWAY AND ALLEY PAVEMENT	SQ YD	116
76	PROTECTIVE CONCRETE COAT	SQ YD	116
77	DETECTABLE ADA WARNING TILES, LINEAR (CAST IRON)	SQ FT	1,284
78	HOT-MIX ASPHALT SURFACE COURSE, IL-9.5L, MIX "C", N30 (CDOT)	TON	2,736
79	HOT-MIX ASPHALT SURFACE COURSE, MIX "D", N70	TON	428
80	LEVELING BINDER (MACHINE METHOD), N30	TON	275
81	LEVELING BINDER (MACHINE METHOD), N70	TON	43
82	HOT-MIX ASPHALT BINDER COURSE, IL-19.0L, N30	TON	108
83	BITUMINOUS MATERIALS (TACK COAT)	POUND	383
84	THERMOPLASTIC PAVEMENT MARKING - LINE 4"	FOOT	171
85	THERMOPLASTIC PAVEMENT MARKING - LINE 6"	FOOT	4,037
86	THERMOPLASTIC PAVEMENT MARKING - LINE 24"	FOOT	1,662
87	THERMOPLASTIC PAVEMENT MARKING, LETTERS AND SYMBOLS	SQ FT	113
88	SODDING, SALT TOLERANT	SQ YD	556
89	TOPSOIL FURNISH AND PLACE, 3"	SQ YD	556
90	MANHOLES TO BE ADJUSTED	EACH	2
91	CATCH BASINS TO BE ADJUSTED	EACH	51
92	VALVE VAULTS TO BE ADJUSTED	EACH	5
93	BUFFALO BOXES TO BE ADJUSTED	EACH	2
94	MANHOLES TO BE CLEANED	EACH	2
95	CATCH BASINS TO BE CLEANED	EACH	51
96	VALVE VAULTS TO BE CLEANED	EACH	5
97	FILLING CATCH BASINS	EACH	4
98	TEMPORARY WATER MAIN SUPPORT STRUCTURE - TYPE III	EACH	2
99	TEMPORARY WATER MAIN SUPPORT STRUCTURE - TYPE II	EACH	2
100	WATER MAIN INSTALLED IN OPEN CUT - 8-INCH	LF	150
101	WATER MAIN INSTALLED IN OPEN CUT - 12-INCH	LF	30
102	CUT, CAP, AND REPLACE EXISTING WATER MAIN FOR UTILITY INSTALLATION - 8-INCH	EACH	15
103	CUT, CAP, AND REPLACE EXISTING WATER MAIN FOR UTILITY INSTALLATION - 12-INCH	EACH	3
104	8-INCH SIDE CONNECTION TO 16-INCH AND SMALLER WATER MAIN	EACH	1
105	VALVE INSTALLATION - 8-INCH	EACH	1
106	CONTROLLED LOW STRENGTH MATERIAL (CLSM)	CU YD	20

PERCENT COMPLETE	DATE
30	
60	
75	
90	
100	11-02-20
BULLETIN	

CITY OF CHICAGO
DEPARTMENT OF WATER MANAGEMENT
BUREAU OF ENGINEERING SERVICES

SUMMARY OF QUANTITIES

DRAWN:	LNM
DESIGNED:	LNM
CHECKED:	LNM
REVIEWED:	

PN 7500 & PN 7445

$FILE$
$DATE$

PN 7500

CITY OF CHICAGO

LORI E. LIGHTFOOT, MAYOR

DEPARTMENT OF WATER MANAGEMENT

RANDY CONNER, COMMISSIONER

BUREAU OF ENGINEERING SERVICES
SEWER SECTION

WILLIAM CHEAKS, MANAGING DEPUTY COMMISSIONER

W 58TH ST FROM S MOBILE AV TO S NASHVILLE AV
S NARRAGANSETT AV FROM W 58TH ST TO W 59TH ST
S NATOMA AV FROM W 57TH ST TO W 58TH ST
W 58TH ST FROM S NATOMA AV TO S NOTTINGHAM AV
PROJECT NO 7500

SEWER IMPROVEMENT PROGRAM

SHEET NO	DESCRIPTION
	COVER SHEET/INDEX
1	LOCATION/INDEX MAP, GENERAL/SPECIAL NOTES, LEGEND
~~2~~	~~SUMMARY OF QUANTITIES~~
3-4	SOIL BORINGS
5	BENCHMARKS AND CONTROL POINTS
6-9	ALIGNMENTS AND TIES
10-13	PLAN & PROFILE, W 58TH ST - S MOBILE AV TO S NASHVILLE AV
14-15	PLAN & PROFILE, S NARRAGANSETT AV - W 58TH ST TO W 59TH ST
16-17	PLAN & PROFILE, S NATOMA AV - W 57TH ST TO W 58TH ST
18-23	PLAN & PROFILE, W 58TH ST - S NATOMA AV TO S NOTTINGHAM AV
24-26	SUGGESTED MAINTENANCE OF TRAFFIC PLAN, S NARRAGANSETT AV
27	TYPICAL SECTIONS
28-31	PARTIAL PVMT RESTORATION, W 58TH ST - S MOBILE AV TO S NASHVILLE AV
32-33	PARTIAL PVMT RESTORATION, S NARRAGANSETT AV - W 58TH ST TO W 59TH ST
34-35	PARTIAL PVMT RESTORATION, S NATOMA AV - W 57TH ST TO W 58TH ST
36-41	PARTIAL PVMT RESTORATION, W 58TH ST - S NATOMA AV TO S NOTTINGHAM AV
42-44	CONNECTION DETAILS
45-67	DETAILS
68-69	AS-BUILTS

V3 Companies
7325 Janes Avenue
Woodridge, IL 60517
630.724.9200 phone
630.724.9202 fax
www.v3co.com
Visio, Vertere, Virtute... "The Vision to Transform with Excellence"

STATE OF ILLINOIS
HEIDI E. VOIROL
ILLINOIS
062-057225
LICENSED PROFESSIONAL ENGINEER

HEIDI E. VOIROL
ILL. LICENSED PROFESSIONAL
ENGINEER NO. 062-057225
LICENSE EXPIRES ON NOVEMBER 30, 2021



THIS CERTIFIES THAT THESE DRAWINGS HAVE BEEN REVIEWED TO THE BEST OF MY KNOWLEDGE AND BELIEVE ARE IN ACCORDANCE WITH THE AMERICANS WITH DISABILITIES ACT (ADA), AND ALL CODES AND BUILDING ORDINANCES OF THE CITY OF CHICAGO, STATE OF ILLINOIS.

LICENSED ARCHITECT / LICENSED ENGINEER

DWM PM:

OUC EFP-102974

CITY OF CHICAGO
DEPARTMENT OF WATER MANAGEMENT
BUREAU OF ENGINEERING SERVICES

APPROVED _____ COORDINATING ENGINEER
APPROVED _____ CHIEF ENGINEER
APPROVED _____ DEPUTY COMMISSIONER
APPROVED _____ COMMISSIONER
DATE: 7/6/20

PERCENT COMPLETE	DATE
30	11-22-19
60 REV	04-09-20
75 REV	05-28-20
90 REV	08-05-20
100	08-21-20
BULLETIN	

USER NAME = $USER
PLOT DATE = $DATE
FILE NAME = $FILE
$FILE$
$DATE$

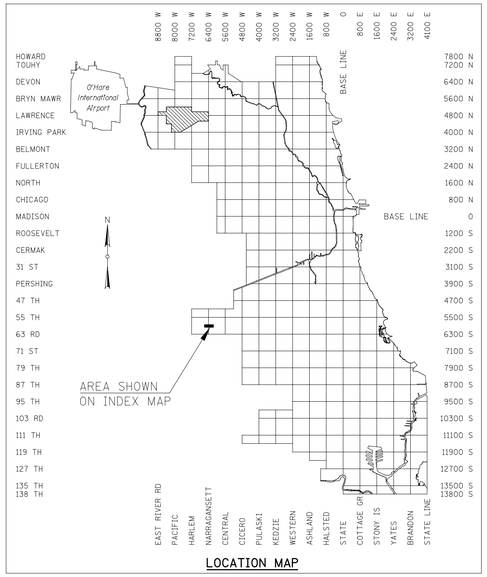

LOCATION MAP

PROJECT LOCATION

N.T.S.

STANDARD LINE TYPES

10" SEWER	ABANDONED SEWER
12" G 12"	EXISTING GAS
16" W 16"	EXISTING WATER
A A A	EXISTING AERIAL
L L L	EXISTING BURIED CABLE
CTV CTV CTV	EXISTING CABLE TV
E E E	EXISTING CITY ELECTRIC
ComEd ComEd	EXISTING COMED
FO FO FO	EXISTING FIBER OPTICS
F&P F&P F&P	EXISTING FIRE AND POLICE
O O	EXISTING OIL
T T T	EXISTING TELEPHONE
	EXISTING SEWER
	PROPOSED SEWER
	EXISTING BUILDING LINE
	FENCE
	BURIED RAILROAD TRACKS
	EXISTING ROW LINE
54+00	BASE LINE

STANDARD SYMBOLS

EX	PR	
		SEWER MANHOLE (TYPE A)
		SEWER MANHOLE (TYPE A) BASE TEE
		SEWER MANHOLE (TYPE B)
		SEWER MANHOLE (TYPE B) MODIFIED
		SEWER MANHOLE (TYPE B) REVERSED
		SEWER MANHOLE (TYPE C-SINGLE DROP)
		SEWER MANHOLE (TYPE C-DOUBLE DROP)
		SEWER MANHOLE TUMBLING BASIN
XX-Y		MANHOLE XX- (CO=CONCRETE, LI=LINED, BR=BRICK), Y-(F= FILL)
XX-Y		CATCH BASIN XX- (CO=CONCRETE, LI=LINED, BR=BRICK), Y-(F= FILL)
		STRUCTURE REMOVAL
		INLET
CB		GUTTER BOX
		D.C. - DRAIN CONNECTION-PR CB
		D.C. - DRAIN CONNECTION-EX CB
		DIRECTION OF FLOW
		SUMMIT
12.5		ORDINANCE GRADE
		SIGN
		BUSH
XX"		TREE
12"		EVERGREEN TREE
		FIRE HYDRANT
		CITY LIGHT POLE
		TRAFFIC SIGNAL ON CITY LIGHT POLE
		UTILITY POLE
		TRAFFIC SIGNAL
		CONTROLLER BOX
		UTILITY VAULT
		SOIL BORING

STANDARD SYMBOLS

EX	PR	
		PARKING METER
		"L" COLUMN
		MAIL BOX
+		CUT CROSS IN CONCRETE
		DRY WEATHER WATER SURFACE
		PAY & DISPLAY PARKING METER BOX
		WATER MAIN CUT & CAP
W		WATER METER
W		WATER VAULT
		WATER SERVICE VALVE
		WATER BUFFALO BOX
G		GAS BUFFALO BOX
		GAS METER
E		ELEC. METER
G		GAS SERVICE VALVE
E		CITY ELEC MH
CE		COMED MH
G		GAS MH
T		TELECOM MH
T		TELECOM VAULT
E		CITY ELEC. VAULT
CE		COMED VAULT
G		GAS VAULT
		ADA DETECTABLE TILE
		THRUST BLOCK
		WATER MAIN SUPPORT TYPE I, A or B, (BY OTHERS)
		WATER MAIN SUPPORT, TYPE II, (BY OTHERS)
		WATER MAIN SUPPORT, TYPE III, (BY OTHERS)

LEGEND

TO BE BUILT UNDER THIS CONTRACT

PRINCIPAL EXISTING CITY SEWER

MAIN LINE LENGTH = 6,303 L.F.

AUXILLARY LENGTH = 319 L.F.

TOTAL LENGTH = 6,622 L.F.

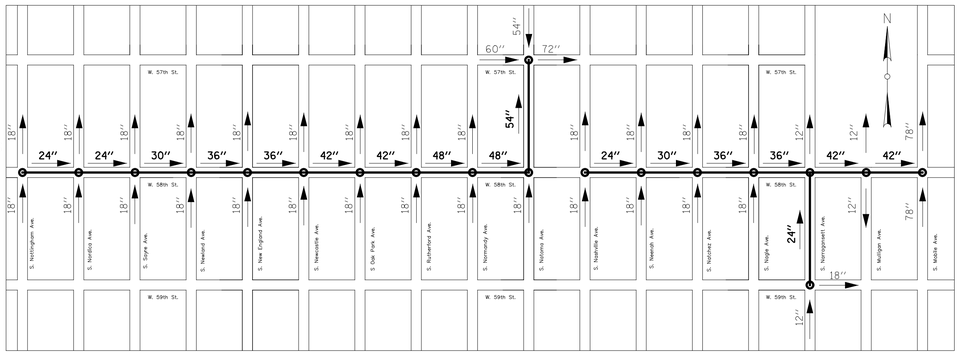

GENERAL NOTES

1. UNLESS OTHERWISE SHOWN ON THE PLANS, OR ORDERED BY THE COMMISSIONER, SOLID LIDS MUST BE PLACED ON ALL SEWER MANHOLES, EXCEPT AT STREET INTERSECTIONS.

2. LOCATE AND RECONNECT ALL LIVE DRAINS TO NEW SEWER.

3. SEE OUC SUBMITTAL FOR GEOTECHNICAL INFORMATION AND TRENCHING EXCAVATION EXCEEDING 12 FEET DEEP.

4. A PERMIT MUST BE OBTAINED FROM THE CITY OF CHICAGO, DEPARTMENT OF WATER MANAGEMENT FOR ANY UNDERGROUND SEWER WORK INCLUDING ADJUSTMENT OF SEWER STRUCTURES AND REMOVAL/REPLACEMENT OF FRAMES AND LIDS. THE PERMIT MUST BE OBTAINED BY AND THE WORK MUST BE PERFORMED BY A LICENSED DRAIN LAYER UNDER PERMITS AND INSPECTION OF THE CITY OF CHICAGO, DEPARTMENT OF WATER MANAGEMENT.

5. THE LOCATION AND ELEVATIONS OF EXISTING UTILITIES, WATER PIPES, SEWER, CONDUITS, LINES AND OTHER UNDERGROUND STRUCTURES SHOWN ON THE PLANS AND PROFILES HAVE BEEN OBTAINED FROM DRAWINGS AND DATA RECEIVED FROM VARIOUS SOURCES AND THE INFORMATION IS BELIEVED TO BE CORRECT BUT IS NOT GUARANTEED TO BE CORRECT. HORIZONTAL AND VERTICAL LOCATION OF ALL EXISTING UTILITIES SHALL BE FIELD VERIFIED.
6. ANY OVERHEAD 911 OR COMED FACILITIES WHICH CROSS THE SEWER TRENCH OR ARE WITHIN 20 FEET OF THE CENTERLINE OF THE SEWER ARE SHOWN ON THE PLAN AND PROFILE SHEETS.

7. ALL KNOWN WATER PIPE SERVICES OVER 2" ARE SHOWN BUT THOSE 2" AND UNDER ARE NOT SHOWN OR NOTED. THE INTERRUPTION OF WATER SERVICE LINES SHALL NOT BE ALLOWED WITHOUT PRIOR APPROVAL OF THE COMMISSIONER.

8. 48 HOURS BEFORE STARTING EXCAVATION, THE CONTRACTOR SHALL CALL DIGGER (CHICAGO UTILITY ALERT NETWORK) AT 312-744-7000 TO HAVE THE LOCATION OF EXISTING UNDERGROUND UTILITIES STAKED.

9. SEVEN (7) DAYS NOTICE MUST BE GIVEN TO THE OEMC TRAFFIC MANAGEMENT TASK FORCE PRIOR TO STARTING ANY WORK OR MAKING ANY CHANGES TO EXISTING TRAFFIC PATTERNS. DETAILS OF ANY LANE OR ROADWAY CLOSURE INCLUDING DETOUR PLANS MUST BE REVIEWED AND APPROVED BY THE OEMC TRAFFIC MANAGEMENT TASK FORCE. CONTACT 312-743-7394.

10. SEVEN (7) DAYS NOTICE MUST BE GIVEN TO CDOT PRIOR TO STARTING ANY WORK OR MAKING ANY CHANGES IN THE TRAFFIC PATTERN & DETAILS OF ANY LANE OR ROADWAY CLOSURE INCLUDING DETOUR PLANS MUST BE REVIEWED AND APPROVED BY CDOT AT 312-744-4652.

11. ALL WORK IN THE PUBLIC WAY REQUIRES A PERMIT FROM THE DEPARTMENT OF TRANSPORTATION, PERMIT DIVISION AT 312-744-4652.

12. ALL SEWER INSTALLATIONS MUST MEET IEPA SEPARATION REQUIREMENTS FOR WATER AND SEWER PIPES. ALL PROPOSED/REPLACED SEWER LATERALS FROM CATCH BASINS/INLETS, SEWER MAINS, AND PRIVATE DRAINS (COLLECTIVELY KNOWN AS "SEWER FACILITIES") THAT ARE PARALLEL TO WATER MAINS, SERVICES OR FIRE HYDRANT LEADS (COLLECTIVELY KNOWN AS "WATER FACILITIES") THAT ARE LESS THAN 18 INCHES BELOW THE WATER FACILITY AND HAVE LESS THAN 10 FEET OF HORIZONTAL SEPARATION FROM THE OUTSIDE EDGE OF THE WATER FACILITY MUST BE MADE OUT OF DUCTILE IRON/WATER MAIN QUALITY PIPE FOR 10 FEET ON EITHER SIDE OF THE OUTSIDE EDGE OF THE WATER FACILITY. ADDITIONALLY, ALL SEWER FACILITIES THAT CROSS PERPENDICULARLY BELOW WATER FACILITIES WITH LESS THAN 18 INCHES VERTICAL SEPARATION MUST BE MADE OUT OF DUCTILE IRON/WATER MAIN QUALITY PIPE FOR 10 FEET ON EITHER SIDE OF THE OUTSIDE EDGE OF THE WATER FACILITY. IF ANY SEWER FACILITY CROSSES PERPENDICULARLY ABOVE A WATER FACILITY, THEN THE SEWER FACILITY SHALL BE AT LEAST 18 INCHES ABOVE THE WATER FACILITY AND THE SEWER FACILITY MUST MADE OUT OF DUCTILE IRON/WATER MAIN QUALITY PIPE FOR 10 FEET ON EITHER SIDE OF THE OUTSIDE EDGE OF THE WATER FACILITY. SEWER LATERALS THAT REQUIRE DUCTILE IRON/WATER MAIN QUALITY PIPE SHALL BE DUCTILE IRON/WATER MAIN QUALITY PIPE FROM THE CATCH BASIN TO A POINT 10 FEET BEYOND THE EDGE OF THE WATER FACILITY.

13. THESE PLANS AND THE CITY OF CHICAGO SPECIFICATIONS, BOOKS 1,2,&3, GOVERN THE CONSTRUCTION OF THIS PROJECT.

SPECIAL NOTES - FOR CONTRACTORS

1. THE CONTRACTOR SHALL MAINTAIN ACCESS TO PRIVATE PROPERTIES DURING THE CONSTRUCTION OR REMOVAL OPERATIONS. BUSINESS PROPERTY OWNERS SHALL BE NOTIFIED 72 HOURS IN ADVANCE OF CONSTRUCTION OPERATIONS WHICH MAY AFFECT THEIR DAILY SCHEDULES. THE CONTRACTOR SHALL COORDINATE WORK THROUGH THE RESIDENT ENGINEER TO AVOID ANY UNDUE INCONVENIENCE TO LOCAL BUSINESSES.

2. THE CONTRACTOR MUST INSTALL FLOW RESTRICTORS IN ALL EXISTING/PROPOSED CATCH BASINS WITHIN THE PROJECT LIMITS(AREA OF PAVEMENT RESURFACING) IN ACCORDANCE WITH DWM STANDARDS.

3. THE CONTRACTOR IS RESPONSIBLE FOR THE COST OF REPLACEMENT OF ANY BENCH MONUMENT DAMAGED OR DESTROYED DURING CONSTRUCTION. WHERE SECTION OR SUBSECTION MONUMENTS ARE ENCOUNTERED, THE COMMISSIONER SHALL BE NOTIFIED BEFORE SUCH MONUMENTS ARE REMOVED. THE CONTRACTOR SHALL PROTECT AND CAREFULLY PRESERVE ALL PROPERTY MARKERS AND MONUMENTS UNTIL THE ENGINEER, AN AUTHORIZED SURVEYOR, OR AGENT HAS WITNESSED OR OTHERWISE REFERENCED THEIR LOCATION.

4. THE CONTRACTOR SHALL VERIFY THE EXACT LOCATION OF ALL UTILITIES THAT MAY INTERFERE WITH CONSTRUCTION OPERATIONS, AND SHALL REPORT TO THE COMMISSIONER ANY OMISSIONS AND DIFFERENCES FROM THE LOCATIONS SHOWN ON THE PLANS. THE COST OF THIS WORK WILL BE CONSIDERED INCIDENTAL TO THE CONTRACT.

5. CONCRETE RESTORATION SHALL FOLLOW NO MORE THAN 660 FEET BEHIND THE COMPLETED SEWER OR LENGTH AS DETERMINED BY THE COMMISSIONER.

PERCENT COMPLETE	DATE
30	11-22-19
60 REV	04-09-20
75 REV	05-28-20
90 REV	08-05-20
100	08-21-20
BULLETIN	

CITY OF CHICAGO
DEPARTMENT OF WATER MANAGEMENT
BUREAU OF ENGINEERING SERVICES

LOCATION / INDEX MAP
GENERAL / SPECIAL NOTES
LEGEND

DRAWN:	
DESIGNED:	
CHECKED:	
REVIEWED:	
OUC EFP-102974	
1 OF 69	
PN 7500	

$FILEL$
$DATE$

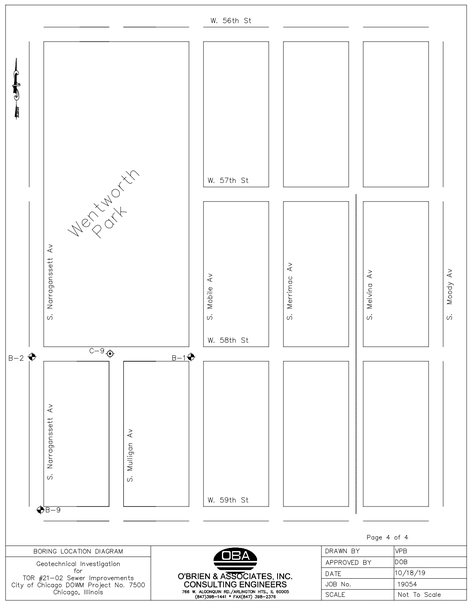

Page 4 of 4

BORING LOCATION DIAGRAM		DRAWN BY	VPB
Geotechnical Investigation for TOR #21-02 Sewer Improvements City of Chicago DOWM Project No. 7500 Chicago, Illinois	O'BRIEN & ASSOCIATES, INC. CONSULTING ENGINEERS 766 W. ALGONQUIN RD./ARLINGTON HTS., IL 60005 (847)388-1441 * FAX(847) 388-2376	APPROVED BY	DOB
		DATE	10/18/19
		JOB No.	19054
		SCALE	Not To Scale

Proposed Sewer

© O'BRIEN & ASSOCIATES, INC.

LOG OF BORING NO. B-1

BORING LOCATION
36.0' West of Mobile Avenue Centerline
2.0' South of 58th Street Centerline

PROJECT DESCRIPTION
TOR #21-02 Sewer Improvements, City of Chicago DOWM
Project No. 7500, Chicago, Illinois

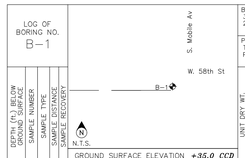

UNCONFINED COMPRESSIVE STRENGTH TONS/FT.²
CALIBRATED PENETROMETER TONS/FT.²
WATER ● CONTENT %
STANDARD "N" PENETRATION (BLOWS/FT.)

DEPTH (ft) BELOW GROUND SURFACE	SAMPLE NUMBER	SAMPLE TYPE	SAMPLE DISTANCE	SAMPLE RECOVERY	UNIT DRY WT. LBS./FT.³	
						GROUND SURFACE ELEVATION +35.0 CCD
	1	AS				5" ASPHALT, 9" CRUSHED STONE FILL
	2	SS			108	LEAN CLAY–brown & gray– very stiff to hard (CL)
5.0	3	SS			106	
	4	SS			111	
10.0	5	SS			111	LEAN CLAY–gray– very stiff to hard (CL)
	6	SS			113	
15.0	7	SS			115	
	8	SS			115	*Proposed Invert Elev. 42"ø Sewer Pipe: +18.4 CCD*
						Proposed Tumbling Basin Invert Elev.: +16.9 CCD
20.0	9	SS			111	
	10	SS			111	
25.0	11	SS			112	
	12	SS			114	
30.0	13	SS			117	

END OF BORING

WATER LEVEL OBSERVATIONS		BORING STARTED	October 4, 2019
Water Level While Drilling –16.0'	O'BRIEN & ASSOCIATES, INC. CONSULTING ENGINEERS 766 W. ALGONQUIN RD./ARLINGTON HTS., IL 60005 (847)388-1441 * FAX(847) 388-2376	BORING COMPLETED	October 4, 2019
Water Level After Boring NA		RIG D-25	FOREMAN DJ
		DRAWN VPB	APPROVED DOB
		JOB No. 19054	SHEET 1 OF 1

© O'BRIEN & ASSOCIATES, INC.

LOG OF BORING NO. B-2

BORING LOCATION
34.0' West of Narragansett Avenue Centerline
2.0' South of 58th Street Centerline

PROJECT DESCRIPTION
TOR #21-02 Sewer Improvements, City of Chicago DOWM
Project No. 7500, Chicago, Illinois

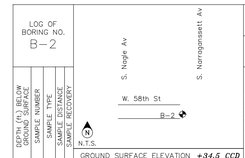

UNCONFINED COMPRESSIVE STRENGTH TONS/FT.²
CALIBRATED PENETROMETER TONS/FT.²
WATER ● CONTENT %
STANDARD "N" PENETRATION (BLOWS/FT.)

DEPTH (ft) BELOW GROUND SURFACE	SAMPLE NUMBER	SAMPLE TYPE	SAMPLE DISTANCE	SAMPLE RECOVERY	UNIT DRY WT. LBS./FT.³	
						GROUND SURFACE ELEVATION +34.5 CCD
	1	AS				3" ASPHALT, 10" CONCRETE, 4" CRUSHED STONE FILL
	2	SS			102	LEAN CLAY–brown & gray mixed w/black–very stiff (CL) Possible Fill
5.0	3	SS				
	4	SS			103	LEAN CLAY–brown & gray– very stiff to hard (CL)
10.0	5	SS			111	
	6	SS			112	LEAN CLAY–gray– very stiff (CL)
15.0	7	SS			112	*Proposed Invert Elev. 30"ø Sewer Pipe: +19.2 CCD*
	8	SS			110	
20.0	9	SS			109	
	10	SS			110	
25.0	11	SS			108	

END OF BORING

WATER LEVEL OBSERVATIONS		BORING STARTED	October 10, 2019
Water Level While Drilling Dry	O'BRIEN & ASSOCIATES, INC. CONSULTING ENGINEERS 766 W. ALGONQUIN RD./ARLINGTON HTS., IL 60005 (847)388-1441 * FAX(847) 388-2376	BORING COMPLETED	October 10, 2019
Water Level After Boring Dry		RIG D-25	FOREMAN DJ
		DRAWN VPB	APPROVED DOB
		JOB No. 19054	SHEET 1 OF 1

© O'BRIEN & ASSOCIATES, INC.

LOG OF BORING NO. B-3

BORING LOCATION
34.0' West of Natchez Avenue Centerline
2.0' South of 58th Street Centerline

PROJECT DESCRIPTION
TOR #21-02 Sewer Improvements, City of Chicago DOWM
Project No. 7500, Chicago, Illinois

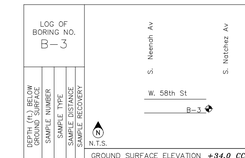

UNCONFINED COMPRESSIVE STRENGTH TONS/FT.²
CALIBRATED PENETROMETER TONS/FT.²
WATER ● CONTENT %
STANDARD "N" PENETRATION (BLOWS/FT.)

DEPTH (ft) BELOW GROUND SURFACE	SAMPLE NUMBER	SAMPLE TYPE	SAMPLE DISTANCE	SAMPLE RECOVERY	UNIT DRY WT. LBS./FT.³	
						GROUND SURFACE ELEVATION +34.0 CCD
	1	AS				5" ASPHALT, 7" CRUSHED STONE FILL
	2	SS			101	LEAN CLAY–brown & gray– very stiff to hard (CL)
5.0	3	SS			106	
	4	SS			111	
10.0	5	SS			112	LEAN CLAY–gray– very stiff to hard (CL)
	6	SS			109	
15.0	7	SS			113	*Proposed Invert Elev. 30"ø Sewer Pipe: +19.86 CCD*
	8	SS			111	
20.0	9	SS			111	
	10	SS			109	
25.0	11	SS			107	

END OF BORING

WATER LEVEL OBSERVATIONS		BORING STARTED	November 1, 2019
Water Level While Drilling Dry	O'BRIEN & ASSOCIATES, INC. CONSULTING ENGINEERS 766 W. ALGONQUIN RD./ARLINGTON HTS., IL 60005 (847)388-1441 * FAX(847) 388-2376	BORING COMPLETED	November 1, 2019
Water Level After Boring Dry		RIG D-25	FOREMAN DJ
		DRAWN VPB	APPROVED DOB
		JOB No. 19054	SHEET 1 OF 1

© O'BRIEN & ASSOCIATES, INC.



Page 3 of 4

BORING LOCATION DIAGRAM		DRAWN BY	VPB
Geotechnical Investigation for TOR #21-02 Sewer Improvements City of Chicago DOWM Project No. 7500 Chicago, Illinois	O'BRIEN & ASSOCIATES, INC. CONSULTING ENGINEERS 766 W. ALGONQUIN RD./ARLINGTON HTS., IL 60005 (847)388-1441 * FAX(847) 388-2376	APPROVED BY	DOB
		DATE	10/18/19
		JOB No.	19054
		SCALE	Not To Scale

Proposed Sewer

© O'BRIEN & ASSOCIATES, INC.

LOG OF BORING NO. B-4

BORING LOCATION
34.0' West of Nashville Avenue Centerline
5.0' North of 58th Street Centerline

PROJECT DESCRIPTION
TOR #21-02 Sewer Improvements, City of Chicago DOWM
Project No. 7500, Chicago, Illinois

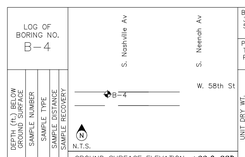

UNCONFINED COMPRESSIVE STRENGTH TONS/FT.²
CALIBRATED PENETROMETER TONS/FT.²
WATER ● CONTENT %
STANDARD "N" PENETRATION (BLOWS/FT.)

DEPTH (ft) BELOW GROUND SURFACE	SAMPLE NUMBER	SAMPLE TYPE	SAMPLE DISTANCE	SAMPLE RECOVERY	UNIT DRY WT. LBS./FT.³	
						GROUND SURFACE ELEVATION +33.8 CCD
	1	AS				9" ASPHALT, 5" CONCRETE, 4" CRUSHED STONE FILL
	2	SS			102	LEAN CLAY–brown & gray– very stiff to hard (CL)
5.0	3	SS			108	
	4	SS			112	
10.0	5	SS			113	
	6	SS			107	LEAN CLAY–gray– very stiff to hard (CL)
15.0	7	SS			105	*Proposed Invert Elev. 24"ø Sewer Pipe: +21.0 CCD*
	8	SS			108	
20.0	9	SS			104	
	10	SS			111	

END OF BORING

WATER LEVEL OBSERVATIONS		BORING STARTED	November 6, 2019
Water Level While Drilling Dry	O'BRIEN & ASSOCIATES, INC. CONSULTING ENGINEERS 766 W. ALGONQUIN RD./ARLINGTON HTS., IL 60005 (847)388-1441 * FAX(847) 388-2376	BORING COMPLETED	November 6, 2019
Water Level After Boring Dry		RIG D-25	FOREMAN PR
		DRAWN VPB	APPROVED DOB
		JOB No. 19054	SHEET 1 OF 1

© O'BRIEN & ASSOCIATES, INC.

LOG OF BORING NO. B-9

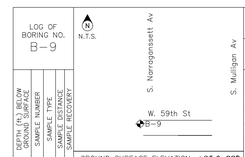

BORING LOCATION
12.0' East of Narragansett Avenue Centerline
34' North of 59th Street Centerline

PROJECT DESCRIPTION
TOR #21-02 Sewer Improvements, City of Chicago DOWM
Project No. 7500, Chicago, Illinois

UNCONFINED COMPRESSIVE STRENGTH TONS/FT.²
CALIBRATED PENETROMETER TONS/FT.²
WATER ● CONTENT %
STANDARD "N" PENETRATION (BLOWS/FT.)

DEPTH (ft) BELOW GROUND SURFACE	SAMPLE NUMBER	SAMPLE TYPE	SAMPLE DISTANCE	SAMPLE RECOVERY	UNIT DRY WT. LBS./FT.³	
						GROUND SURFACE ELEVATION +35.0 CCD
	1	AS				4" ASPHALT, 9" CONCRETE
	2	SS			101	LEAN CLAY–dark gray & black– very stiff (CL)
5.0	3	SS			103	LEAN CLAY–gray– very stiff (CL)
	4	SS			111	
10.0	5	SS			107	LEAN CLAY–gray– very stiff (CL)
	6	SS			113	*Proposed Invert Elev. 24"ø Sewer Pipe: +24.6 CCD*
15.0	7	SS			111	
	8	SS			109	
20.0	9	SS			110	
	10	SS			109	

END OF BORING

WATER LEVEL OBSERVATIONS		BORING STARTED	December 2, 2019
Water Level While Drilling Dry	O'BRIEN & ASSOCIATES, INC. CONSULTING ENGINEERS 766 W. ALGONQUIN RD./ARLINGTON HTS., IL 60005 (847)388-1441 * FAX(847) 388-2376	BORING COMPLETED	December 2, 2019
Water Level After Boring Dry		RIG D-25	FOREMAN DJ
		DRAWN VPB	APPROVED DOB
		JOB No. 19054	SHEET 1 OF 1

© O'BRIEN & ASSOCIATES, INC.

$FILE\$
$DATE\$

PERCENT COMPLETE	DATE
30	11-22-19
60 REV	04-09-20
75 REV	05-28-20
90 REV	08-05-20
100	08-21-20
BULLETIN	

CITY OF CHICAGO
DEPARTMENT OF WATER MANAGEMENT
BUREAU OF ENGINEERING SERVICES

SOIL BORINGS

DRAWN:	
DESIGNED:	
CHECKED:	
REVIEWED:	
OUC EFP-102974	
3 OF 69	
PN 7500	

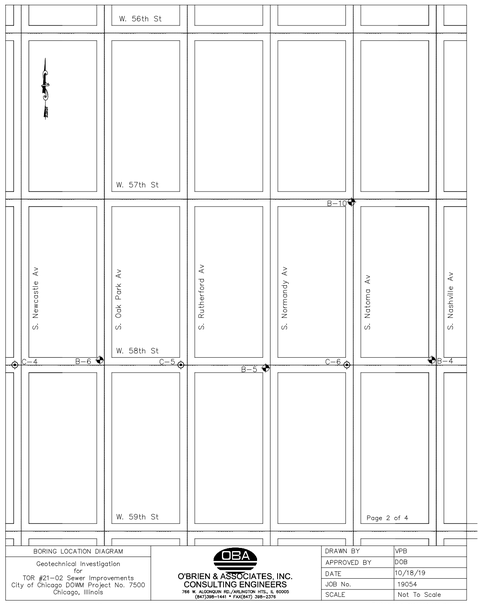

BORING LOCATION DIAGRAM			
Geotechnical Investigation for TOR #21-02 Sewer Improvements City of Chicago DOWM Project No. 7500 Chicago, Illinois	O'BRIEN & ASSOCIATES, INC. CONSULTING ENGINEERS 700 W. ALGONQUIN RD./MOUNTAIN VIEW, IL 60005 (847)398-1441 • FAX(847) 398-2376	DRAWN BY	VPB
		APPROVED BY	DOB
		DATE	10/18/19
		JOB No.	19054
		SCALE	Not To Scale

Proposed Sewer

© O'BRIEN & ASSOCIATES, INC.

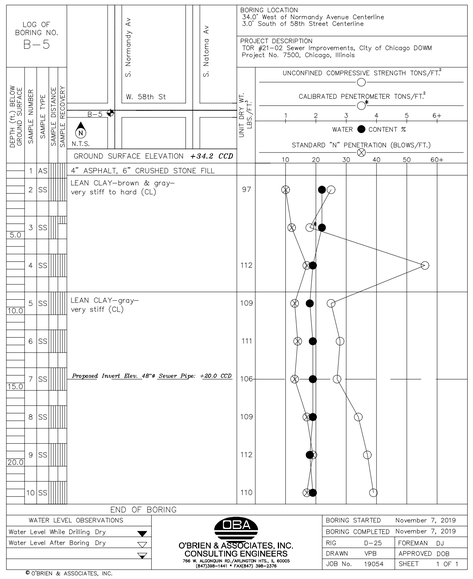

© O'BRIEN & ASSOCIATES, INC.

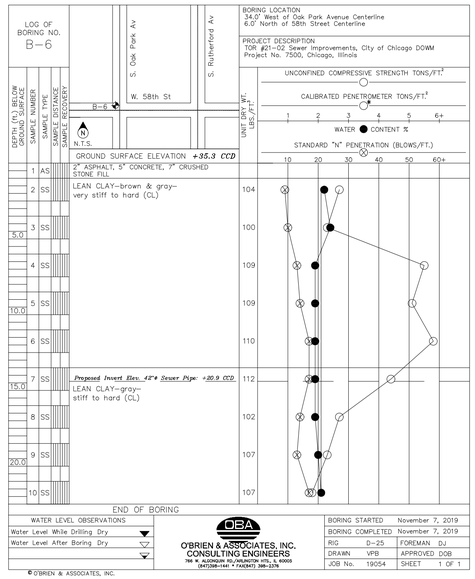

© O'BRIEN & ASSOCIATES, INC.

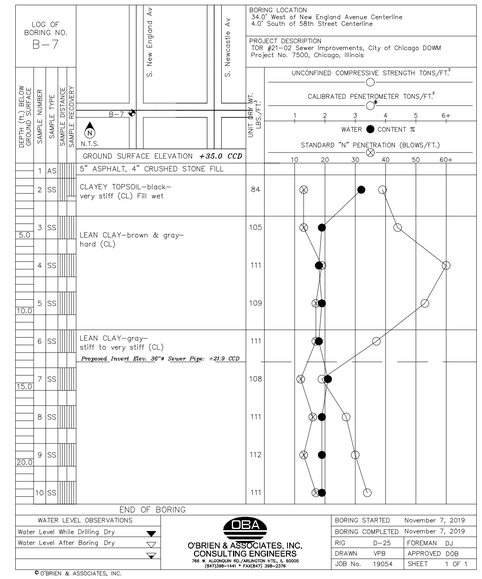

© O'BRIEN & ASSOCIATES, INC.

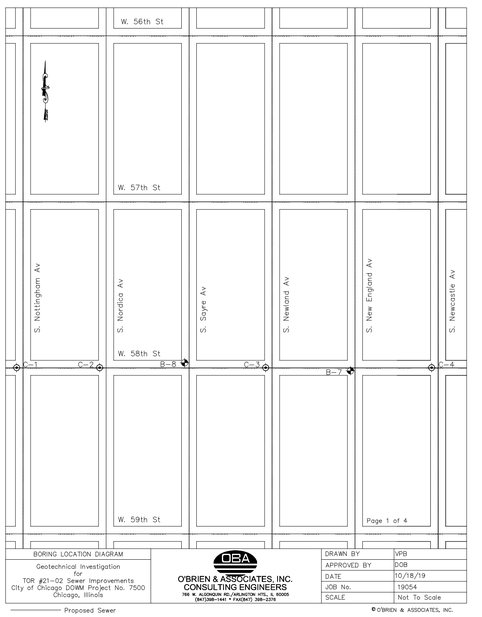

BORING LOCATION DIAGRAM			
Geotechnical Investigation for TOR #21-02 Sewer Improvements City of Chicago DOWM Project No. 7500 Chicago, Illinois	O'BRIEN & ASSOCIATES, INC. CONSULTING ENGINEERS 700 W. ALGONQUIN RD./MOUNTAIN VIEW, IL 60005 (847)398-1441 • FAX(847) 398-2376	DRAWN BY	VPB
		APPROVED BY	DOB
		DATE	10/18/19
		JOB No.	19054
		SCALE	Not To Scale

Proposed Sewer

© O'BRIEN & ASSOCIATES, INC.

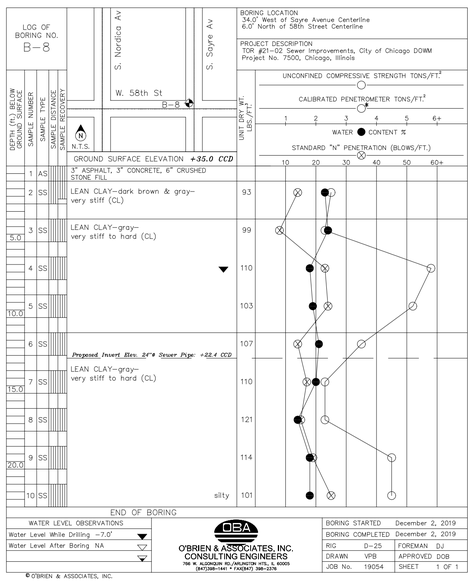

© O'BRIEN & ASSOCIATES, INC.

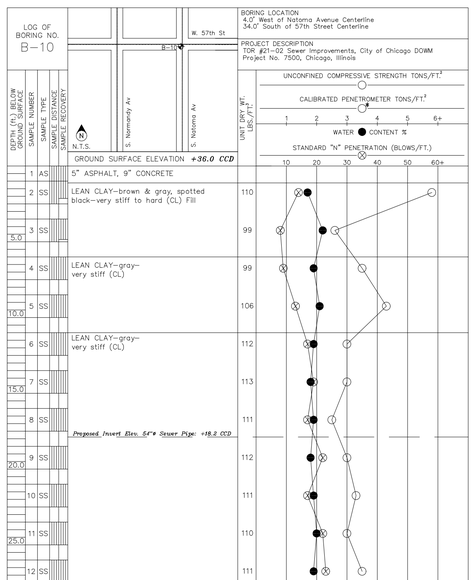

© O'BRIEN & ASSOCIATES, INC.

PERCENT COMPLETE	DATE
30	11-22-19
60 REV	04-09-20
75 REV	05-28-20
90 REV	08-05-20
100	08-21-20
BULLETIN	

CITY OF CHICAGO
DEPARTMENT OF WATER MANAGEMENT
BUREAU OF ENGINEERING SERVICES

SOIL BORINGS

DRAWN:	
DESIGNED:	
CHECKED:	
REVIEWED:	
OUC EFP-102974	
4 OF 69	
PN 7500	

$FILE$
$DATE$

CITY OF CHICAGO BENCH MARK NO. 210 ELEV.=33.643

10.2' NORTH OF SOUTH LINE OF W 56TH ST; 10' EAST OF WEST LINE OF S NAGLE AV

TEMPORARY BENCHMARK "A" ELEV.=36.14

CUT CROSS ON SOUTHWESTERLY FLANGE BOLT OF FIRE HYDRANT AT N.W. CORNER OF S MOBILE AV & W 58TH ST

TEMPORARY BENCHMARK "B" ELEV.=35.36

CUT CROSS ON NORTHEASTERLY FLANGE BOLT OF FIRE HYDRANT IN WENTWORTH PARK NORTH OF INTERSECTION AT W 58TH ST & S MULLIGAN AV

TEMPORARY BENCHMARK "C" ELEV.=35.78

CUT CROSS ON SOUTHWESTERLY FLANGE BOLT OF FIRE HYDRANT AT N.W. CORNER OF S NARRAGANSETT AV & W 58TH ST

TEMPORARY BENCHMARK "D" ELEV.=35.14

CUT CROSS ON SOUTHWESTERLY FLANGE BOLT OF FIRE HYDRANT AT N.W. CORNER OF S NAGLE AV & W 58TH ST

TEMPORARY BENCHMARK "E" ELEV.=35.10

CUT CROSS ON SOUTHWESTERLY FLANGE BOLT OF FIRE HYDRANT AT N.W. CORNER OF S NATCHEZ AV & W 58TH ST

TEMPORARY BENCHMARK "F" ELEV.=35.03

CUT CROSS ON SOUTHERLY FLANGE BOLT OF FIRE HYDRANT AT N.W. CORNER OF S NEENAH AV & W 58TH ST

TEMPORARY BENCHMARK "G" ELEV.=35.01

CUT CROSS ON SOUTHERLY FLANGE BOLT OF FIRE HYDRANT AT N.W. CORNER OF S NASHVILLE AV & W 58TH ST

TEMPORARY BENCHMARK "H" ELEV.=34.89

CUT CROSS ON SOUTHWESTERLY FLANGE BOLT OF FIRE HYDRANT AT N.W. CORNER OF S NATOMA AV & W 58TH ST

TEMPORARY BENCHMARK "I" ELEV.=35.17

CUT CROSS ON SOUTHERLY FLANGE BOLT OF FIRE HYDRANT AT N.W. CORNER OF S NORMANDY AV & W 58TH ST

TEMPORARY BENCHMARK "J" ELEV.=36.50

CUT CROSS ON SOUTHWESTERLY FLANGE BOLT OF FIRE HYDRANT AT N.W. CORNER OF S RUTHERFORD AV & W 58TH ST

TEMPORARY BENCHMARK "K" ELEV.=36.00

CUT CROSS ON SOUTHWESTERLY FLANGE BOLT OF FIRE HYDRANT AT N.W. CORNER OF S OAK PARK AV & W 58TH ST

TEMPORARY BENCHMARK "L" ELEV.=36.10

CUT CROSS ON NORTHEASTERLY FLANGE BOLT OF FIRE HYDRANT AT S.E. CORNER OF S NEW CASTLE AV & W 58TH ST

TEMPORARY BENCHMARK "M" ELEV.=35.74

CUT CROSS ON SOUTHEASTERLY FLANGE BOLT OF FIRE HYDRANT AT N.W. CORNER OF S NEW ENGLAND AV & W 58TH ST

TEMPORARY BENCHMARK "N" ELEV.=34.31

CUT CROSS ON SOUTHERLY FLANGE BOLT OF FIRE HYDRANT AT N.W. CORNER OF S NEWLAND AV & W 58TH ST

TEMPORARY BENCHMARK "O" ELEV.=36.31

CUT CROSS ON SOUTHWESTERLY FLANGE BOLT OF FIRE HYDRANT AT N.W. CORNER OF S SAYRE AV & W 58TH ST

TEMPORARY BENCHMARK "P" ELEV.=36.46

CUT CROSS ON SOUTHWESTERLY FLANGE BOLT OF FIRE HYDRANT AT N.W. CORNER OF S NORDICA AV & W 58TH ST

TEMPORARY BENCHMARK "Q" ELEV.=36.19

CUT CROSS ON SOUTHWESTERLY FLANGE BOLT OF FIRE HYDRANT AT N.W. CORNER OF S NOTTINGHAM AV & W 58TH ST

TEMPORARY BENCHMARK "R" ELEV.=36.22

CUT CROSS ON SOUTHWESTERLY FLANGE BOLT OF FIRE HYDRANT AT N.W. CORNER OF S NARRAGANSETT AV & W 59 TH ST

TEMPORARY BENCHMARK "A1" ELEV.=37.16

CUT CROSS ON WESTERLY FLANGE BOLT OF FIRE HYDRANT AT N.W. CORNER OF S NATOMA AV & W 57TH AV

CONTROL POINT NO. 100 ELEV.=35.49

CUT CROSS ON N.E. CORNER OF W 58TH ST AND S MOBILE AV

CONTROL POINT NO. 101 ELEV.=34.75

CUT CROSS ON S.W. CORNER OF W 58TH ST AND S NARRAGANSETT AV

CONTROL POINT NO. 102 ELEV.=34.24

CUT CROSS ON S.E. CORNER OF W 58TH ST AND S NAGLE AV

CONTROL POINT NO. 103 ELEV.=34.20

CUT CROSS ON N.E. CORNER OF W 58TH ST AND S NATCHEZ AV

CONTROL POINT NO. 104 ELEV.=34.17

CUT CROSS ON S.W. CORNER OF W 58TH ST AND S NEENAH AV

CONTROL POINT NO. 105 ELEV.=33.99

CUT CROSS ON S.W. CORNER OF W 58TH ST AND S NASHVILLE AV

CONTROL POINT NO. 106 ELEV.=34.63

CUT CROSS ON S.W. CORNER OF W 58TH ST AND S MULLIGAN AV

CONTROL POINT NO. 107 ELEV.=34.45

CUT CROSS ON S.W. CORNER OF W 58TH ST AND S NATOMA AV

CONTROL POINT NO. 108 ELEV.=34.38

CUT CROSS ON S.W. CORNER OF W 58TH ST AND S NORMANDY AV

CONTROL POINT NO. 109 ELEV.=34.53

CUT CROSS ON S.W. CORNER OF W 58TH ST AND S RUTHERFORD AV

CONTROL POINT NO. 110 ELEV.=34.69

CUT CROSS ON S.W. CORNER OF W 58TH ST AND S OAK PARK AV

CONTROL POINT NO. 111 ELEV.=34.69

CUT CROSS ON S.E. CORNER OF W 58TH ST AND S NEW CASTLE AV

CONTROL POINT NO. 112 ELEV.=35.05

CUT CROSS ON S.W. CORNER OF W 58TH ST AND S NEW ENGLAND AV

CONTROL POINT NO. 113 ELEV.=34.57

CUT CROSS ON S.E. CORNER OF W 58TH ST AND S NEWLAND AV

CONTROL POINT NO. 114 ELEV.=35.09

CUT CROSS ON S.W. CORNER OF W 58TH ST AND S SAYRE AV

CONTROL POINT NO. 115 ELEV.=35.27

CUT CROSS ON S.E. CORNER OF W 58TH ST AND S NORDICA AV

CONTROL POINT NO. 116 ELEV.=35.21

CUT CROSS ON S.W. CORNER OF W 58TH ST AND S NOTTINGHAM AV

CONTROL POINT NO. 117 ELEV.=35.07

CUT CROSS ON S.W. CORNER OF W 59TH ST AND S NARRAGANSETT AV

ALIGNMENT STATION TABLE

STATION	ELEVATION	DESCRIPTION
W. 58TH ST.		
10+00	35.51	CUT 'X'
11+00	35.53	CUT 'X'
12+00	35.21	CUT 'X'
13+00	35.00	CUT 'X'
14+00	34.71	CUT 'X'
15+00	33.24	CUT 'X'
16+00	33.05	CUT 'X'
17+00	34.84	PK
18+00	34.87	CUT 'X'
19+00	34.52	CUT 'X'
20+00	34.29	CUT 'X'
21+00	34.36	CUT 'X'
22+00	34.40	CUT 'X'
23+00	34.07	CUT 'X'
24+00	34.25	CUT 'X'
25+00	32.65	CUT 'X'
26+00	32.84	CUT 'X'
27+00	33.97	PK
28+00	34.20	CUT 'X'
29+00	32.60	CUT 'X'
30+00	34.01	CUT 'X'
31+00	34.22	CUT 'X'
S. NARRAGANSETT AVE.		
130+00	34.97	CUT 'X'
131+00	34.99	CUT 'X'
132+00	35.13	CUT 'X'
133+00	35.28	CUT 'X'
134+00	35.28	CUT 'X'
135+00	35.17	CUT 'X'
136+00	35.03	CUT 'X'
137+00	35.06	PK
138+00	35.23	CUT 'X'
S. NATOMA AVE.		
40+00	36.32	CUT 'X'
41+00	35.43	CUT 'X'
42+00	35.09	CUT 'X'
43+00	35.02	CUT 'X'
44+00	34.89	CUT 'X'
45+00	34.54	CUT 'X'
46+00	34.26	CUT 'X'
47+00	33.95	PK
47+82.45	34.45	CUT 'X'

STATION	ELEVATION	DESCRIPTION
W. 58TH ST.		
50+00	34.12	CUT 'X'
51+00	34.86	CUT 'X'
52+00	34.45	PK
53+00	34.49	CUT 'X'
54+00	34.51	CUT 'X'
55+00	34.43	CUT 'X'
56+00	34.75	CUT 'X'
57+00	34.54	PK
58+00	34.94	CUT 'X'
59+00	34.79	CUT 'X'
60+00	34.78	CUT 'X'
61+00	34.82	CUT 'X'
62+00	34.63	PK
63+00	34.74	CUT 'X'
64+00	34.72	CUT 'X'
65+00	34.73	CUT 'X'
66+00	34.91	CUT 'X'
67+00	34.98	PK
68+00	35.09	CUT 'X'
69+00	34.92	CUT 'X'
70+00	34.80	CUT 'X'
71+00	34.68	CUT 'X'
72+00	34.97	PK
73+00	35.17	CUT 'X'
74+00	35.03	CUT 'X'
75+00	35.14	CUT 'X'
76+00	35.19	CUT 'X'
77+00	35.00	PK
78+00	35.23	CUT 'X'
79+00	35.31	CUT 'X'
80+00	35.27	CUT 'X'
81+00	35.31	CUT 'X'

NOTE:
1. ALL ELEVATIONS REFER TO THE CITY OF CHICAGO DATUM. ELEVATIONS SHOWN ON PLANS ARE BASED ON CHICAGO CITY DATUM, WHICH IS 579.88 FEET ABOVE MEAN SEA LEVEL, 1935 ADJUSTMENT.

2. ELEVATIONS SHOWN ON ALIGNMENT TABLE MUST BE VERIFIED WITH CITY OF CHICAGO BENCHMARK.

3. WHENEVER POSSIBLE, USE A MINIMUM OF 2 TO 3 CITY STANDARD BENCHMARKS TO TIE IN TBM'S AND CONTROL POINTS.

PERCENT COMPLETE	DATE
30	11-22-19
60 REV	04-09-20
75 REV	05-28-20
90 REV	08-05-20
100	08-21-20
BULLETIN	

CITY OF CHICAGO
DEPARTMENT OF WATER MANAGEMENT
BUREAU OF ENGINEERING SERVICES

BENCHMARKS AND CONTROL POINTS

DRAWN:
DESIGNED:
CHECKED:
REVIEWED:

OUC EFP-102974

5 OF 69

PN 7500

$FILE$
$DATE$

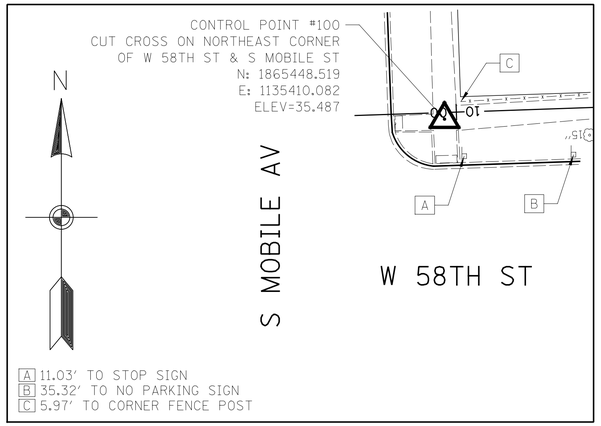

CONTROL POINT #100 TIES STA. 10+03.2, 1.75 LT

(NOT TO SCALE)

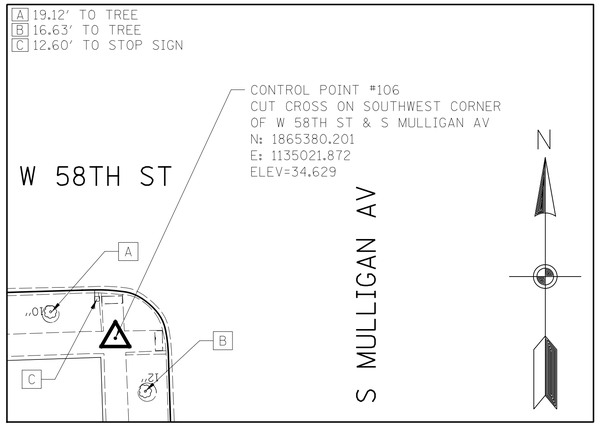

CONTROL POINT #106 TIES STA. 13+93.5, 57.09 LT

(NOT TO SCALE)

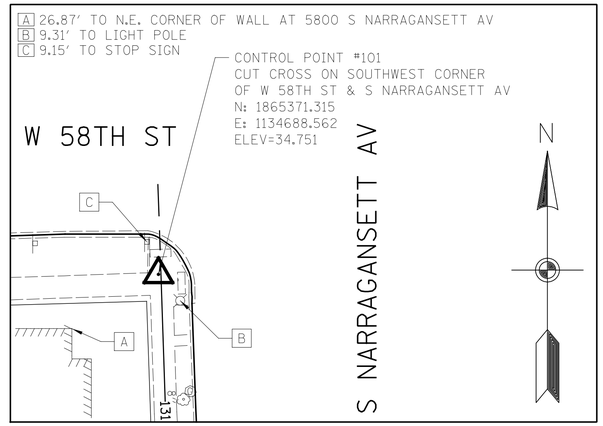

CONTROL POINT #101 TIES STA. 17+26.6, 55.01 LT

(NOT TO SCALE)

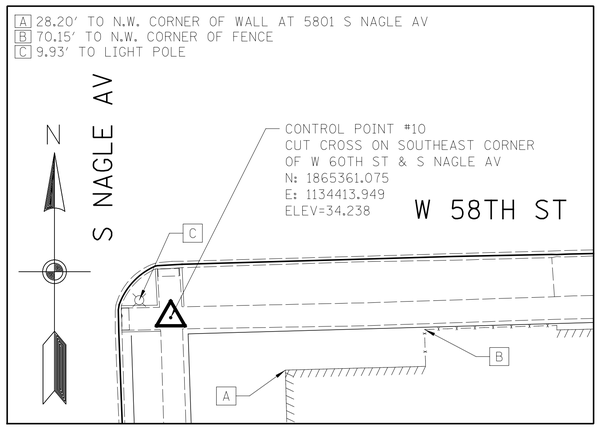

CONTROL POINT #102 TIES STA. 21+01.4, 57.58 LT

(NOT TO SCALE)

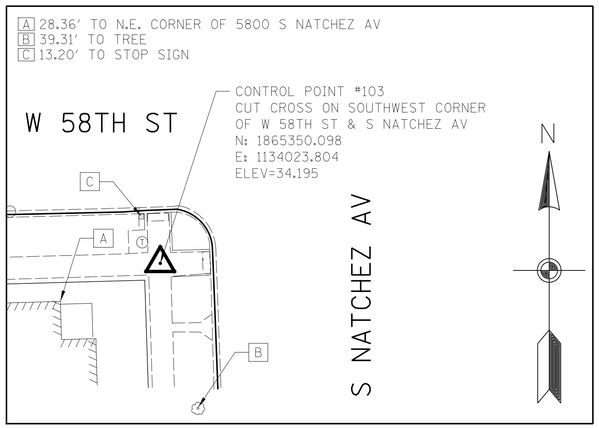

CONTROL POINT #103 TIES STA. 23+91.7, 57.67 LT

(NOT TO SCALE)

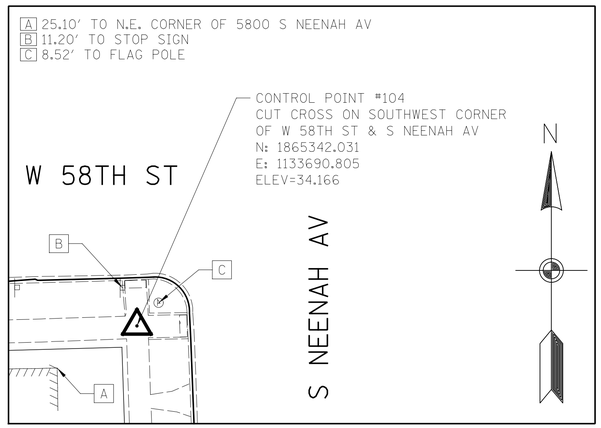

CONTROL POINT #104 TIES STA. 27+24.8, 56.5 LT

(NOT TO SCALE)

$FILE\$
$DATE\$

PERCENT COMPLETE	DATE
30	11-22-19
60 REV	04-09-20
75 REV	05-28-20
90 REV	08-05-20
100	08-21-20
BULLETIN	

CITY OF CHICAGO
DEPARTMENT OF WATER MANAGEMENT
BUREAU OF ENGINEERING SERVICES

ALIGNMENT AND TIES

DRAWN:
DESIGNED:
CHECKED:
REVIEWED:

OUC EFP-102974

6 OF 69

PN 7500

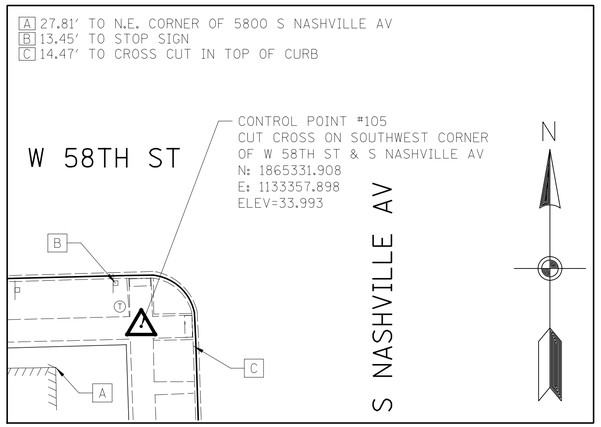

CONTROL POINT #105 TIES STA. 30+57.8, 57.30 LT

(NOT TO SCALE)

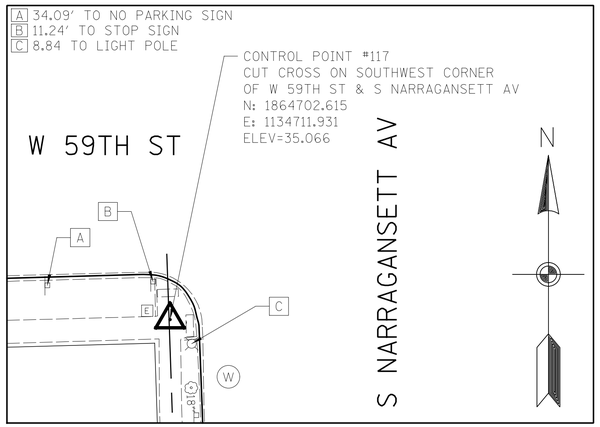

CONTROL POINT #117 TIES STA. 137+28.1

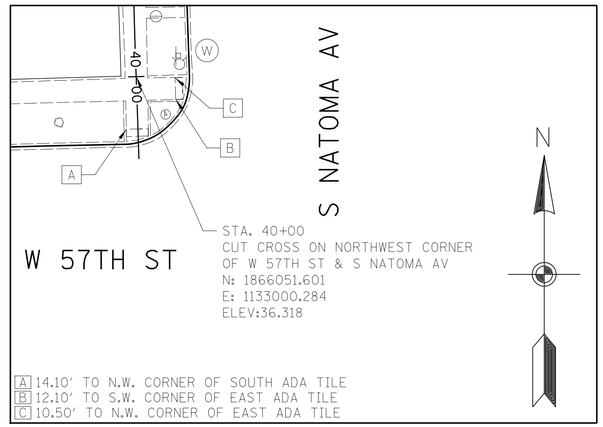

STATION 40+00 TIES

(NOT TO SCALE)

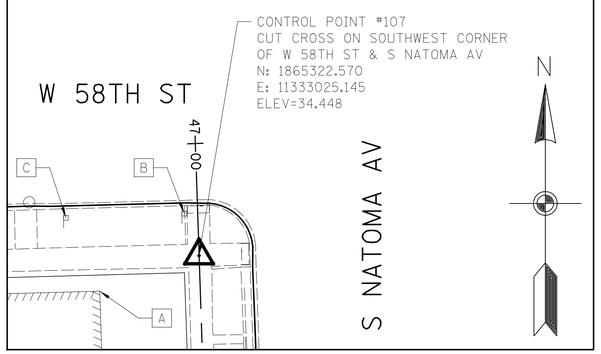

CONTROL POINT #107 TIES STA. 47+29.6

(NOT TO SCALE)

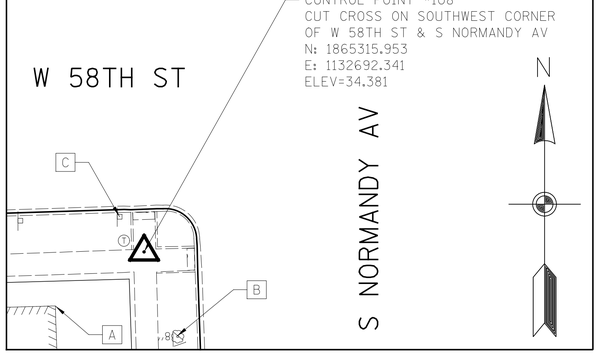

CONTROL POINT #108 TIES STA. 53+94.4, 54.94 LT

(NOT TO SCALE)

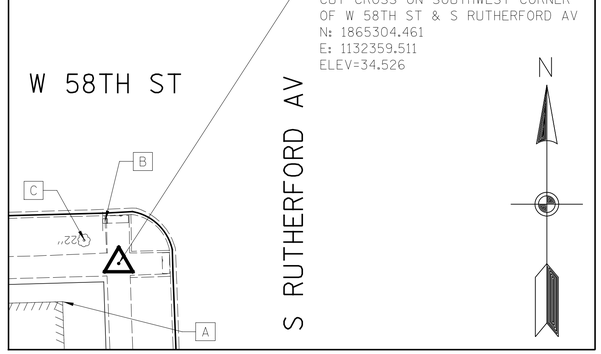

CONTROL POINT #109 TIES STA. 57+27.4, 57.29 LT

(NOT TO SCALE)

$FILE$
$DATE$

PERCENT COMPLETE	DATE
30	11-22-19
60 REV	04-09-20
75 REV	05-28-20
90 REV	08-05-20
100	08-21-20
BULLETIN	

CITY OF CHICAGO
DEPARTMENT OF WATER MANAGEMENT
BUREAU OF ENGINEERING SERVICES

ALIGNMENT AND TIES

DRAWN:
DESIGNED:
CHECKED:
REVIEWED:

OUC EFP-102974

7 OF 69

PN 7500

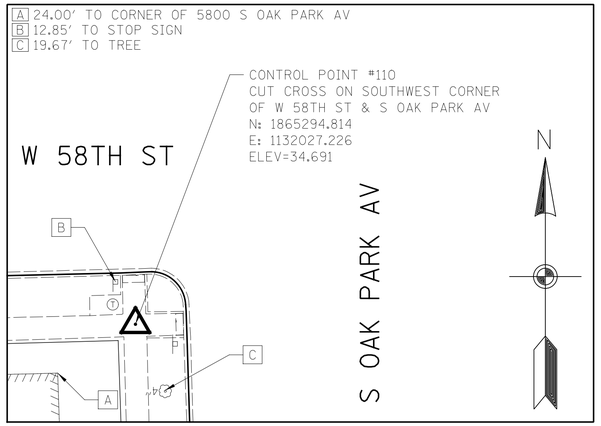

CONTROL POINT #110 TIES STA. 60+59.8, 57.82 LT

(NOT TO SCALE)

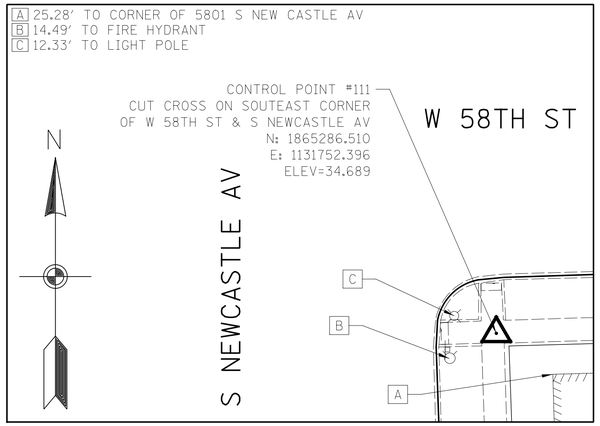

CONTROL POINT #111 TIES STA. 64+34.8, 58.59 LT

(NOT TO SCALE)

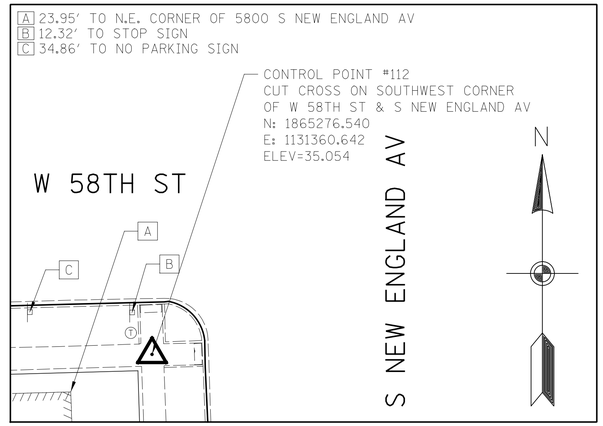

CONTROL POINT #112 TIES STA. 67+26.7, 57.81 LT

(NOT TO SCALE)

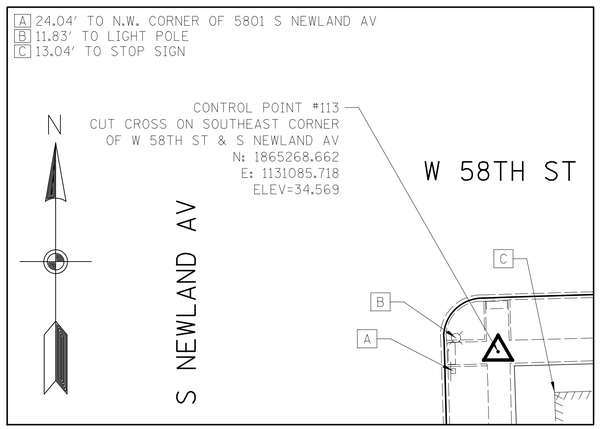

CONTROL POINT #113 TIES STA. 70+01.7, 58.13 LT

(NOT TO SCALE)

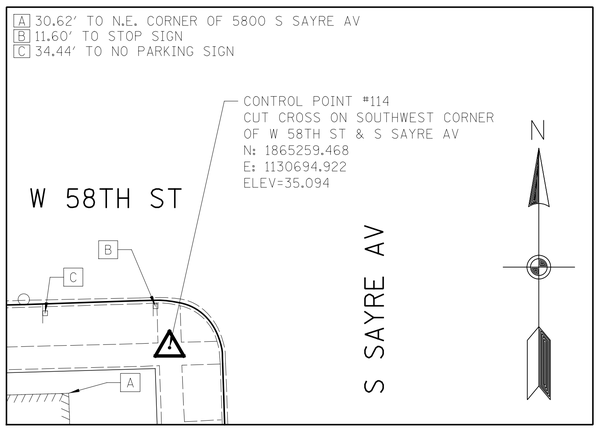

CONTROL POINT #114 TIES STA. 73+92.6, 56.60 LT

(NOT TO SCALE)

$FILEL$
$DATE$

PERCENT COMPLETE	DATE
30	11-22-19
60 REV	04-09-20
75 REV	05-28-20
90 REV	08-05-20
100	08-21-20
BULLETIN	

CITY OF CHICAGO
DEPARTMENT OF WATER MANAGEMENT
BUREAU OF ENGINEERING SERVICES

ALIGNMENT AND TIES

DRAWN:
DESIGNED:
CHECKED:
REVIEWED:

OUC EFP-102974

8 OF 69

PN 7500

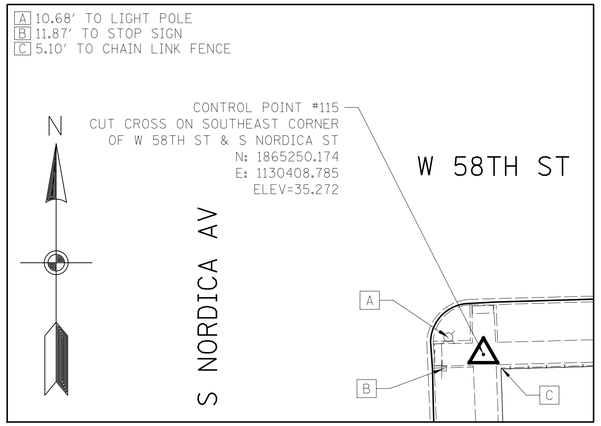

CONTROL POINT #115 TIES STA. 76+78.9, 58.03 LT

(NOT TO SCALE)

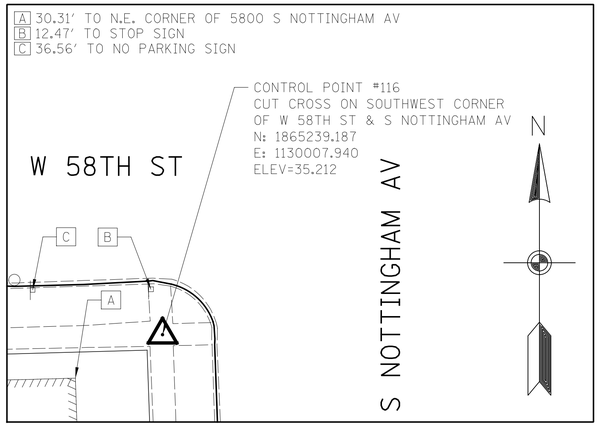

CONTROL POINT #116 TIES STA. 80+80.0, 58.02 LT

(NOT TO SCALE)

PERCENT COMPLETE	DATE
30	11-22-19
60 REV	04-09-20
75 REV	05-28-20
90 REV	08-05-20
100	08-21-20
BULLETIN	

CITY OF CHICAGO
DEPARTMENT OF WATER MANAGEMENT
BUREAU OF ENGINEERING SERVICES

ALIGNMENT AND TIES

DRAWN:
DESIGNED:
CHECKED:
REVIEWED:

OUC EFP-102974

9 OF 69

PN 7500

$FILE$
$DATE$

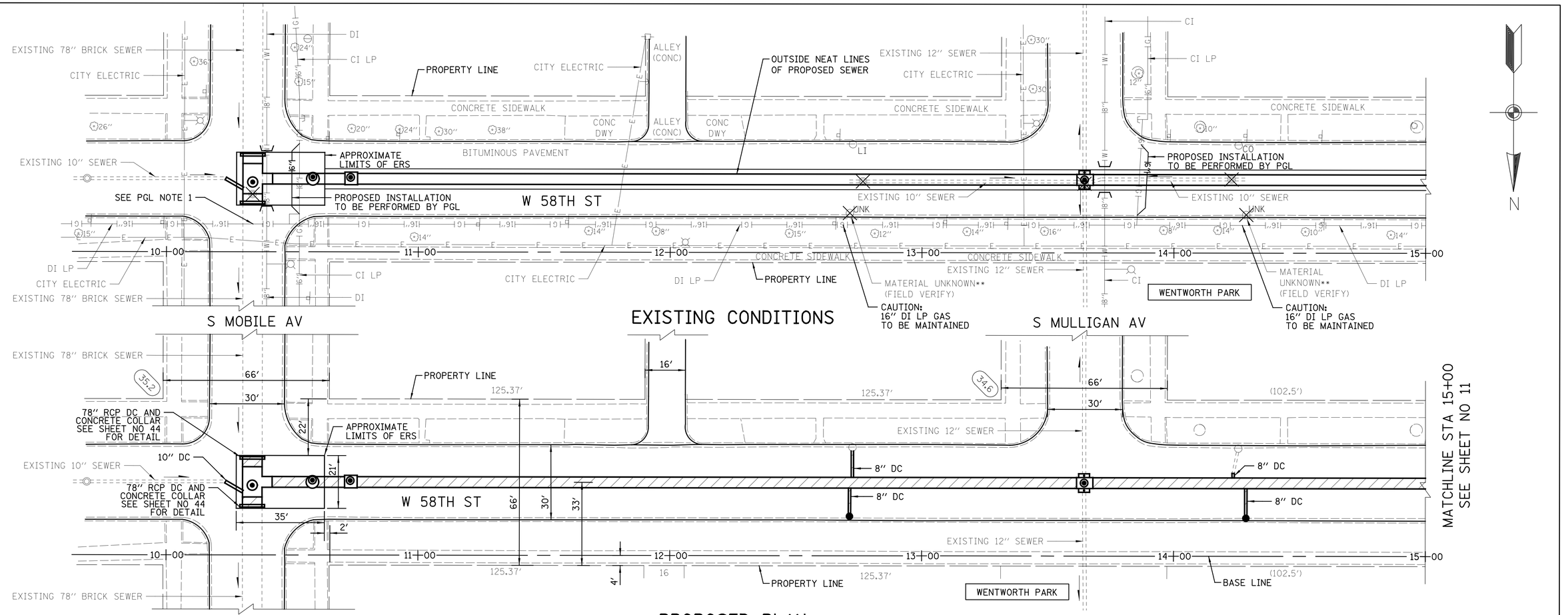

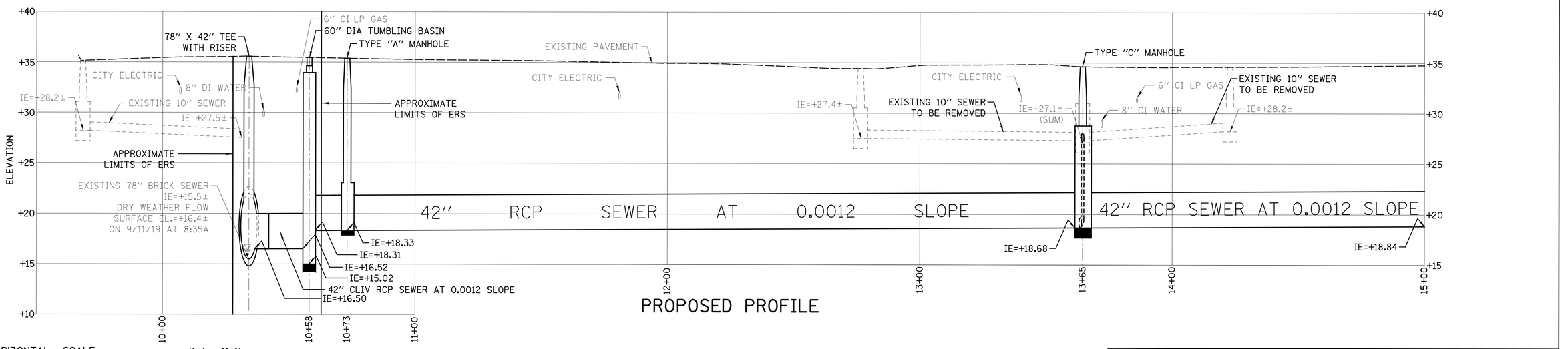

HORIZONTAL SCALE 1inch = 20 ft.

VERTICAL SCALE 1inch = 5 ft.

PGL NOTE 1:
REQUIRES WATCH AND PROTECT. PGL TO BE ON SITE DURING CONSTRUCTION. CONTACT CENTRAL SHOP ENGINEERING SUPERVISOR, ERNEST CRAFTON, 773-475-3774, A MINIMUM OF 5 BUSINESS DAYS PRIOR TO EXCAVATION TO SET UP ON SITE INSPECTION.

** NOTE: BRICK CATCH BASINS TO BE REPLACED IN KIND WITH CONCRETE

PERCENT COMPLETE	DATE
30	11-22-19
60 REV	04-09-20
75 REV	05-28-20
90 REV	08-05-20
100	08-21-20
BULLETIN	

CITY OF CHICAGO
DEPARTMENT OF WATER MANAGEMENT
BUREAU OF ENGINEERING SERVICES

PLAN AND PROFILE
W 58TH ST
S MOBILE AV TO
S NASHVILLE AV

DRAWN:
DESIGNED:
CHECKED:
REVIEWED:

OUC EFP-102974
10 OF 69
PN 7500

$FILE$
$DATE$

EXISTING CONDITIONS

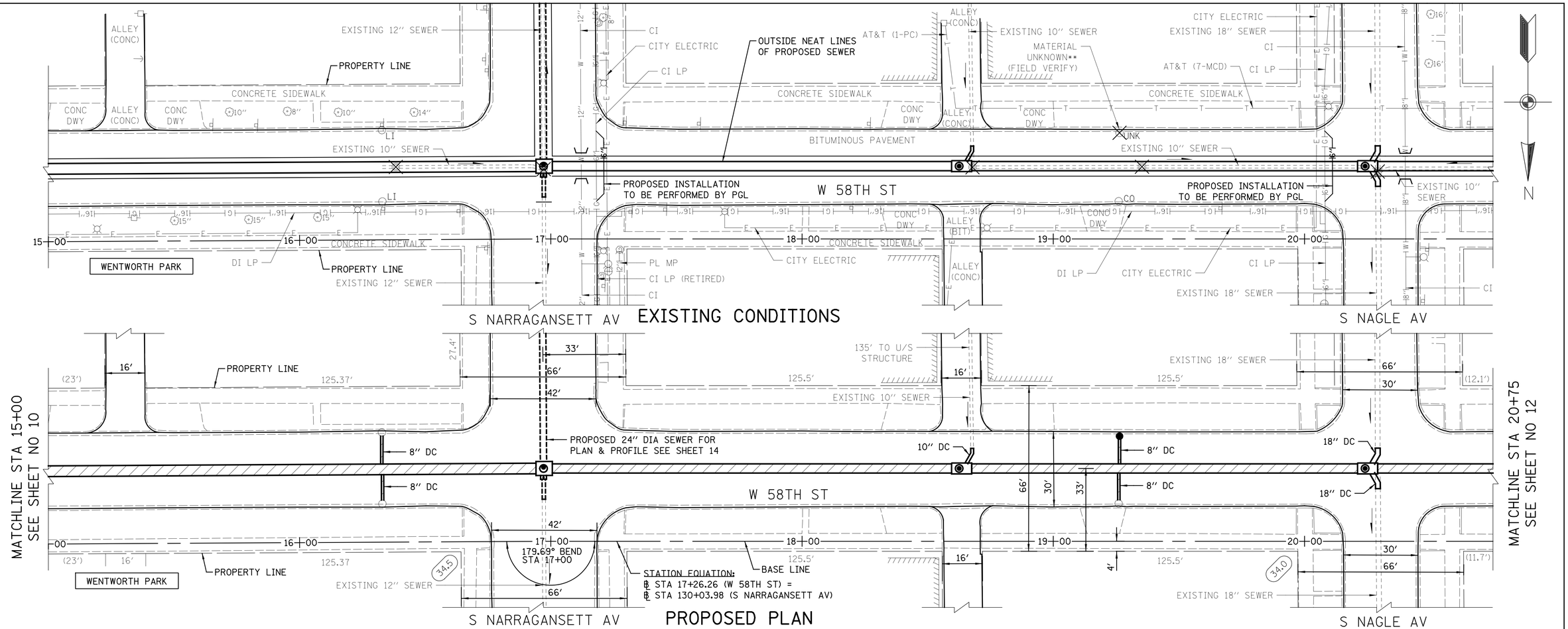

PROPOSED PLAN

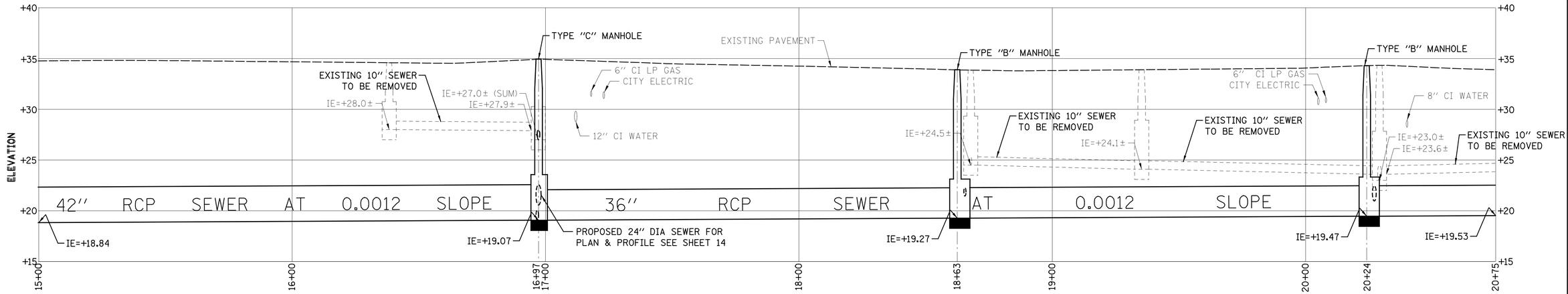

PROPOSED PROFILE

HORIZONTAL SCALE 1inch = 20 ft.
20 0 10 20 40 80

VERTICAL SCALE 1inch = 5 ft.
5 0 2.5 5 10 20

$FILEL$
$DATE$

PERCENT COMPLETE		DATE
30		11-22-19
60	REV	04-09-20
75	REV	05-28-20
90	REV	08-05-20
100		08-21-20
BULLETIN		

CITY OF CHICAGO
DEPARTMENT OF WATER MANAGEMENT
BUREAU OF ENGINEERING SERVICES

PLAN AND PROFILE
W 58TH ST
S MOBILE AV TO
S NASHVILLE AV

DRAWN:
DESIGNED:
CHECKED:
REVIEWED:

OUC EFP-102974
11 OF 69
PN 7500

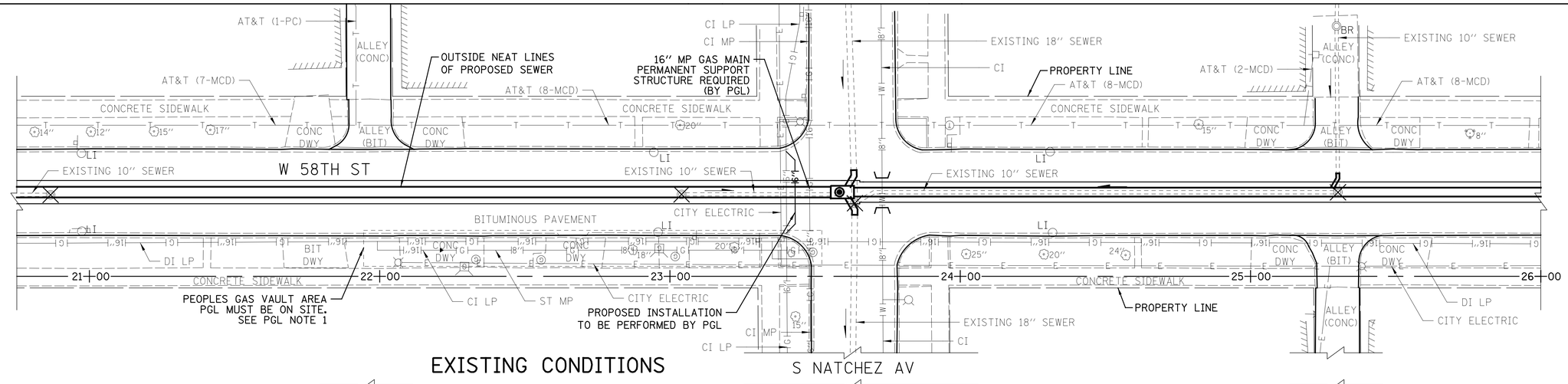

EXISTING CONDITIONS

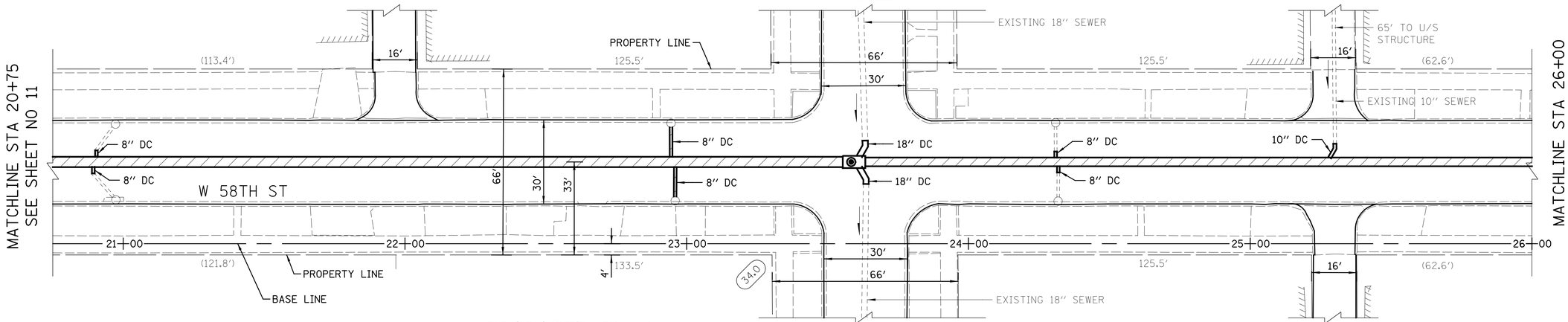

PROPOSED PLAN

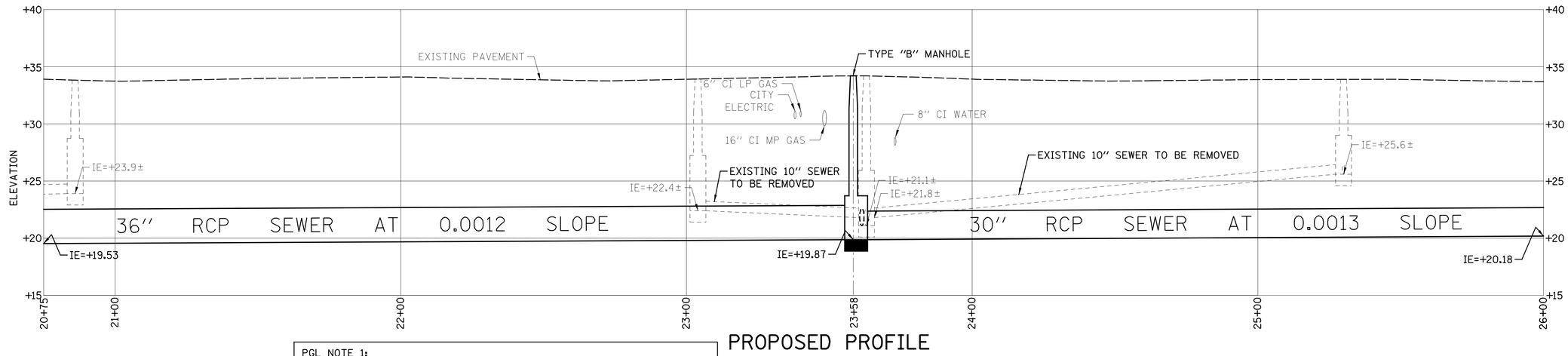

PROPOSED PROFILE

PGL NOTE 1:
THIS PROJECT WILL BE PLACED ON PEOPLES GAS WATCH AND PROTECT. CAUTION: PEOPLES GAS HAS CRITICAL FACILITIES AT THE INTERSECTION OF NATCHEZ AV AND 58TH ST. CONTRACTOR SHALL CONTACT PIPELINE & SYSTEM OPERATIONS ENGINEERING SUPERVISOR, ALBERTO JARA, VIA EMAIL AT ALBERTO.JARA@PEOPLESGASDELIVERY.COM AND CC THE MANAGER OF PIPELINE & SYSTEMS OPERATIONS, MARTIN GARZA, AT MARTIN.GARZA@PEOPLESGASDELIVERY.COM TWO WEEKS PRIOR TO EXCAVATION. EXCAVATIONS PROHIBITED WITHIN 50 FEET OF VAULT FACILITIES UNLESS A REPRESENTATIVE OF THE VAULT DEPARTMENT IS NOTIFIED.

HORIZONTAL SCALE 1inch = 20 ft.

VERTICAL SCALE 1inch = 5 ft.

PERCENT COMPLETE	DATE
30	11-22-19
60 REV	04-09-20
75 REV	05-28-20
90 REV	08-05-20
100	08-21-20
BULLETIN	

CITY OF CHICAGO
DEPARTMENT OF WATER MANAGEMENT
BUREAU OF ENGINEERING SERVICES

PLAN AND PROFILE
W 58TH ST
S MOBILE AV TO
S NASHVILLE AV

DRAWN:
DESIGNED:
CHECKED:
REVIEWED:

OUC EFP-102974

12 OF 69

PN 7500

$FILEL$
$DATE$

EXISTING CONDITIONS

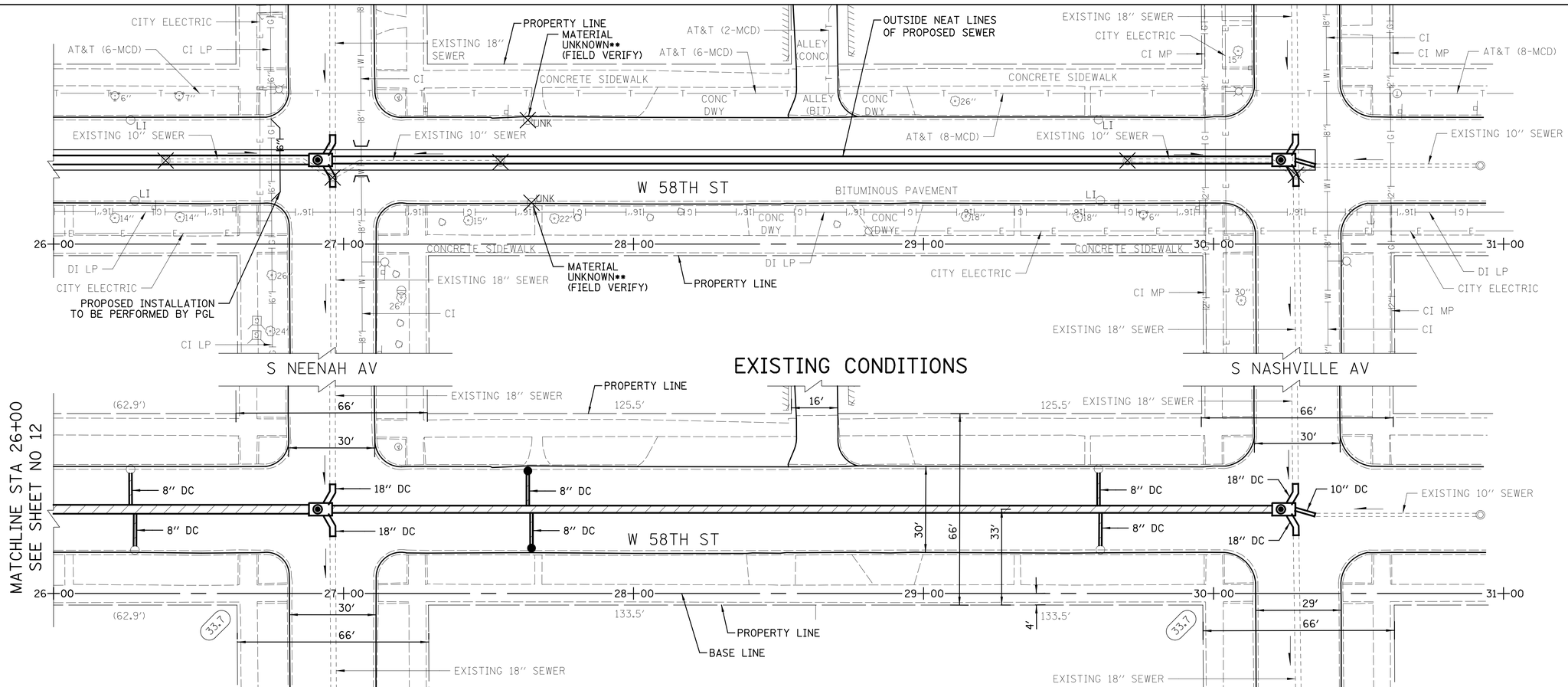

PROPOSED PLAN

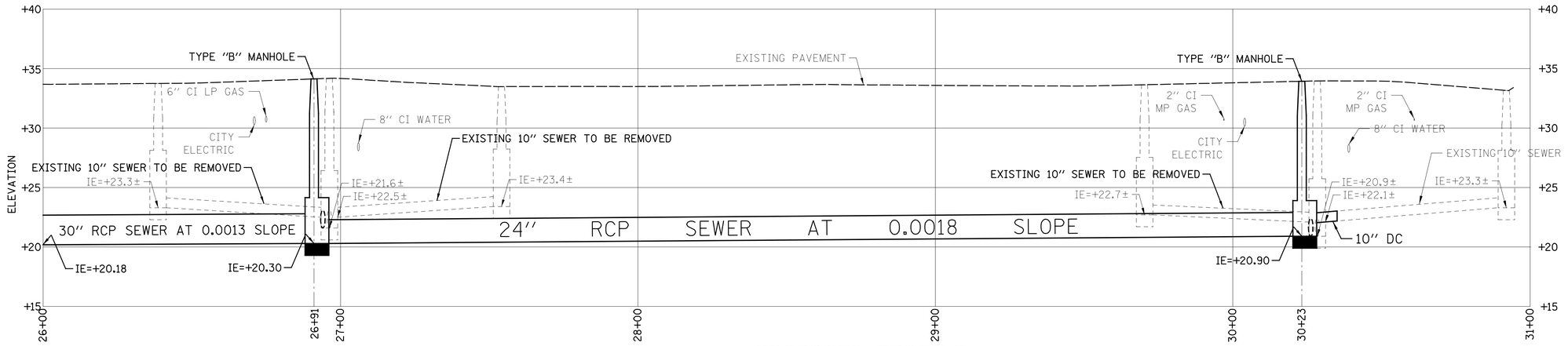

PROPOSED PROFILE

HORIZONTAL SCALE 1inch = 20 ft.

VERTICAL SCALE 1inch = 5 ft.

** NOTE: BRICK CATCH BASINS TO BE REPLACED IN KIND WITH CONCRETE

PERCENT COMPLETE		DATE
30		11-22-19
60	REV	04-09-20
75	REV	05-28-20
90	REV	08-05-20
100		08-21-20
BULLETIN		

CITY OF CHICAGO
DEPARTMENT OF WATER MANAGEMENT
BUREAU OF ENGINEERING SERVICES

PLAN AND PROFILE
W 58TH ST
S MOBILE AV TO
S NASHVILLE AV

DRAWN:
DESIGNED:
CHECKED:
REVIEWED:

OUC EFP-102974

13 OF 69

PN 7500

$FILEL$
$DATE$

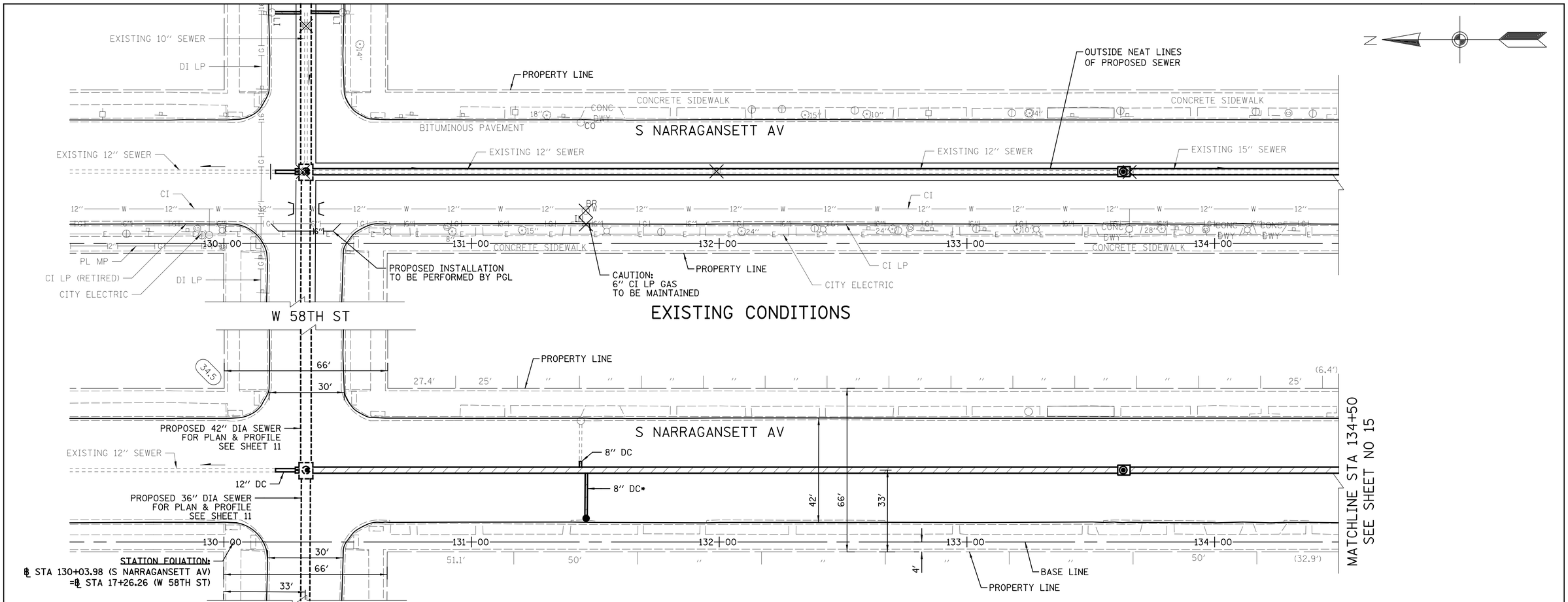

HORIZONTAL SCALE 1inch = 20 ft.

VERTICAL SCALE 1inch = 5 ft.

* NOTE: IF DC CONNECTION IS NOT IEPA COMPLIANT, THEN DC SHALL BE WATER MAIN QUALITY PIPE AND MUST MEET ALL IEPA CLEARANCE REQUIREMENTS.

PERCENT COMPLETE	DATE
30	11-22-19
60 REV	04-09-20
75 REV	05-28-20
90 REV	08-05-20
100	08-21-20
BULLETIN	

CITY OF CHICAGO
DEPARTMENT OF WATER MANAGEMENT
BUREAU OF ENGINEERING SERVICES

PLAN AND PROFILE
S NARRAGANSETT AV
W 58TH ST TO W 59TH ST

DRAWN:
DESIGNED:
CHECKED:
REVIEWED:

OUC EFP-102974

14 OF 69

PN 7500

$FILE$
$DATE$

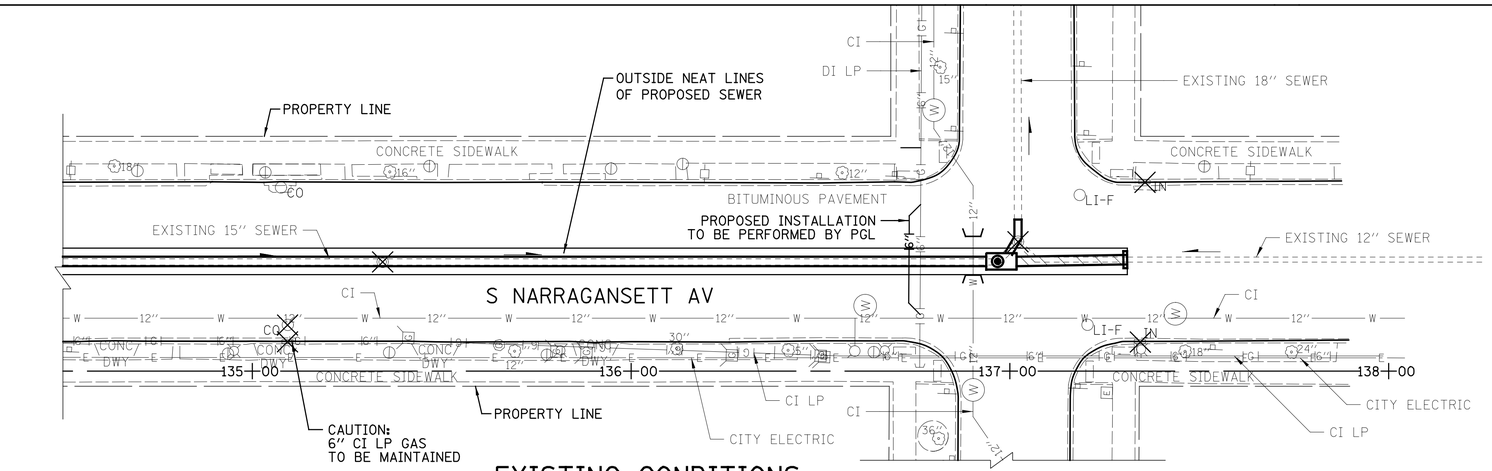

EXISTING CONDITIONS

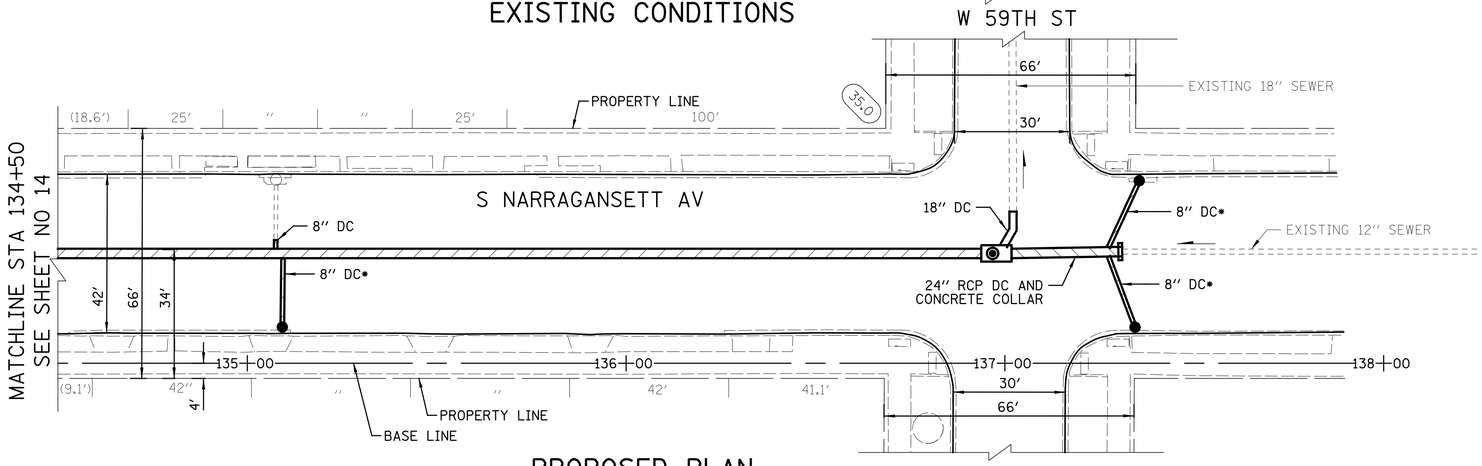

PROPOSED PLAN

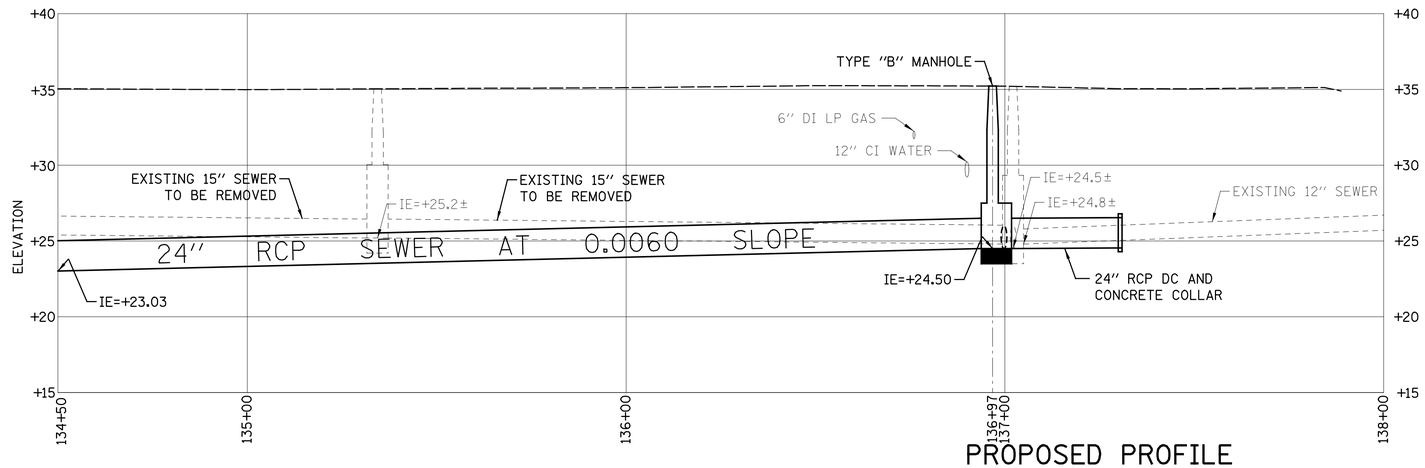

PROPOSED PROFILE

HORIZONTAL SCALE 1inch = 20 ft.

VERTICAL SCALE 1inch = 5 ft.

* NOTE: IF DC CONNECTION IS NOT IEPA COMPLIANT, THEN DC SHALL BE WATER MAIN QUALITY PIPE AND MUST MEET ALL IEPA CLEARANCE REQUIREMENTS.

PERCENT COMPLETE	DATE
30	11-22-19
60 REV	04-09-20
75 REV	05-28-20
90 REV	08-05-20
100	08-21-20
BULLETIN	

CITY OF CHICAGO
DEPARTMENT OF WATER MANAGEMENT
BUREAU OF ENGINEERING SERVICES

PLAN AND PROFILE
S NARRAGANSETT AV
W 58TH ST TO W 59TH ST

DRAWN:
DESIGNED:
CHECKED:
REVIEWED:

OUC EFP-102974

15 OF 69

PN 7500

$FILE$
$DATE$

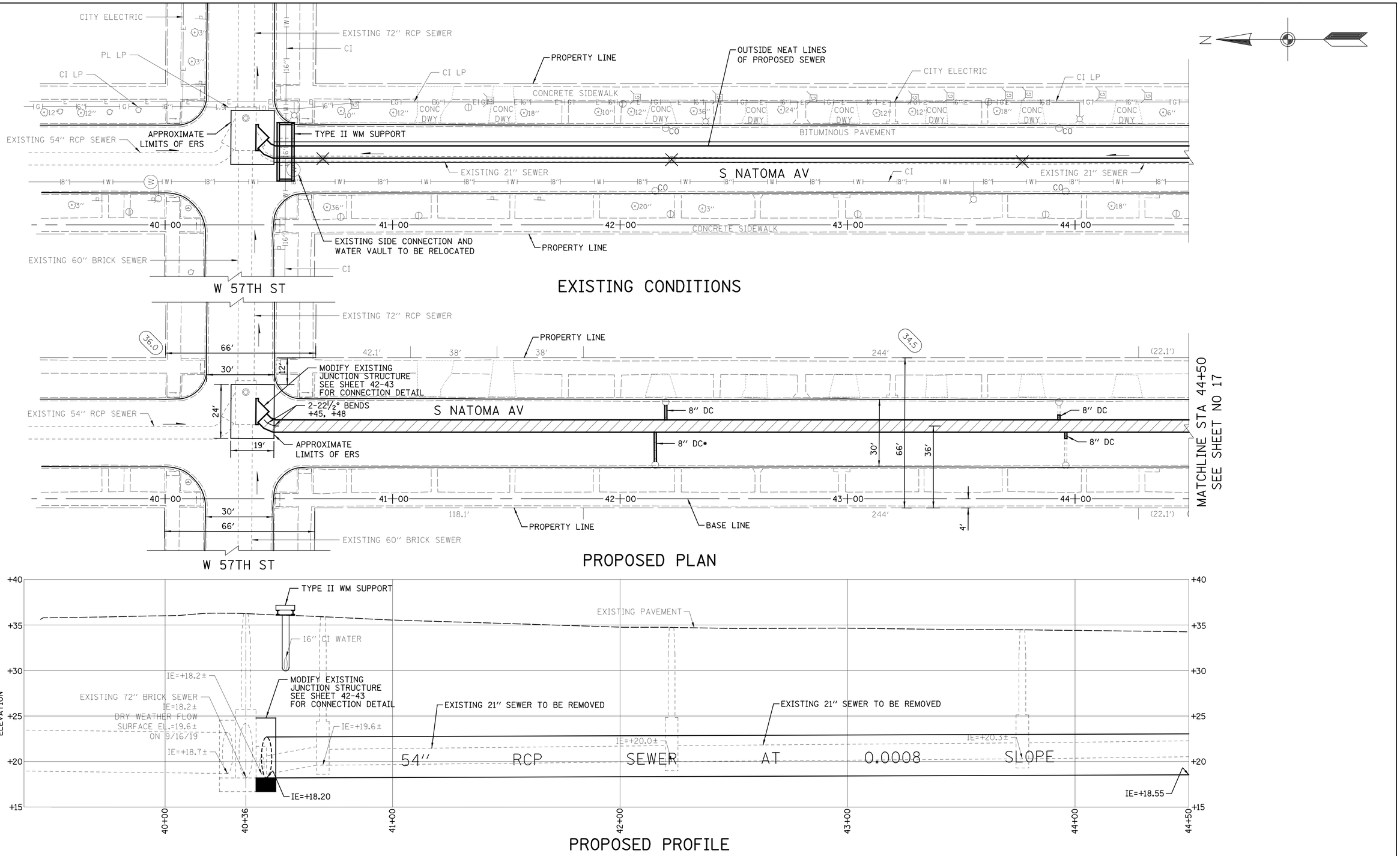

HORIZONTAL SCALE 1inch = 20 ft.

VERTICAL SCALE 1inch = 5 ft.

* NOTE: IF DC CONNECTION IS NOT IEPA COMPLIANT, THEN DC SHALL BE WATER MAIN QUALITY PIPE AND MUST MEET ALL IEPA CLEARANCE REQUIREMENTS.

PERCENT COMPLETE	DATE
30	11-22-19
60 REV	04-09-20
75 REV	05-28-20
90 REV	08-05-20
100	08-21-20
BULLETIN	

CITY OF CHICAGO
DEPARTMENT OF WATER MANAGEMENT
BUREAU OF ENGINEERING SERVICES

PLAN AND PROFILE
S NATOMA AV
W 57TH ST TO W 58TH ST

DRAWN:
DESIGNED:
CHECKED:
REVIEWED:

OUC EFP-102974

16 OF 69

PN 7500

$FILE$
$DATE$

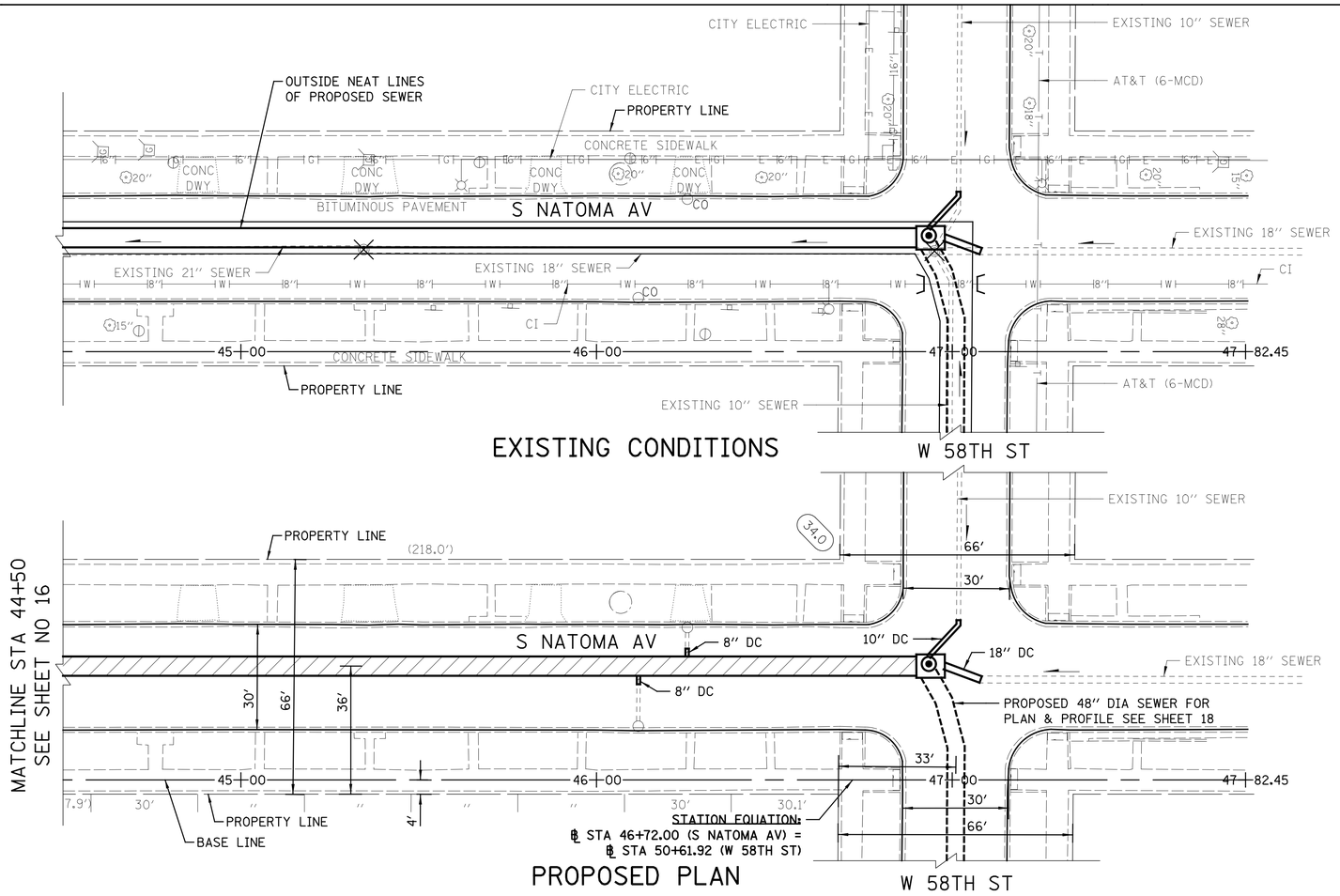

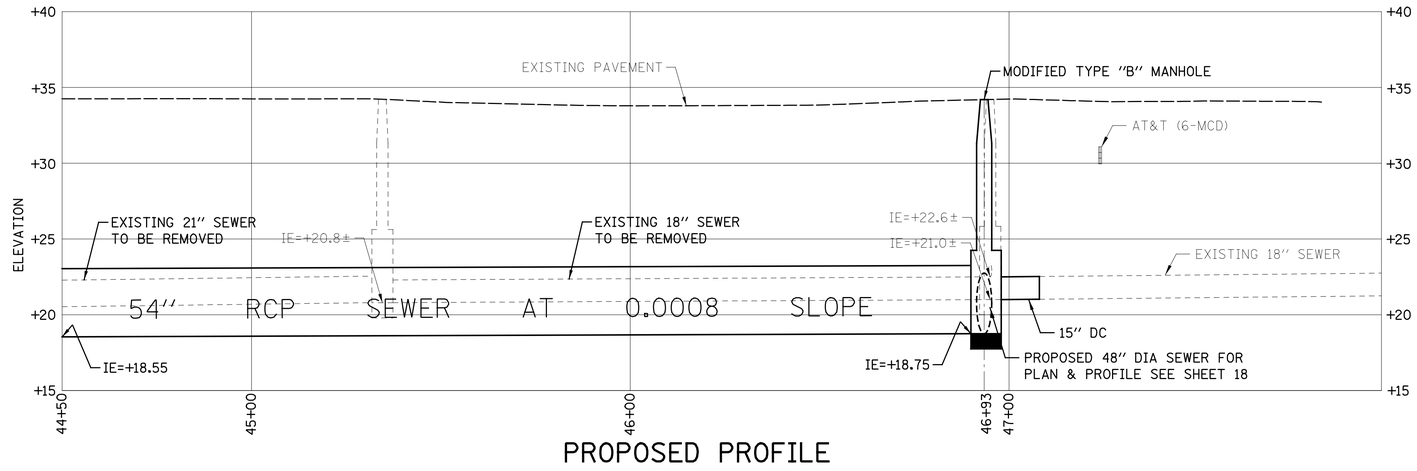

HORIZONTAL SCALE 1inch = 20 ft.

VERTICAL SCALE 1inch = 5 ft.

$FILEL$
$DATE$

PERCENT COMPLETE	DATE
30	11-22-19
60 REV	04-09-20
75 REV	05-28-20
90 REV	08-05-20
100	08-21-20
BULLETIN	

CITY OF CHICAGO
DEPARTMENT OF WATER MANAGEMENT
BUREAU OF ENGINEERING SERVICES

PLAN AND PROFILE
S NATOMA AV
W 57TH ST TO W 58TH ST

DRAWN:
DESIGNED:
CHECKED:
REVIEWED:

OUC EFP-102974

17 OF 69

PN 7500

EXISTING CONDITIONS

W 58TH ST

S NATOMA AV

S NORMANDY AV

CITY ELECTRIC
CI LP
AT&T (8-MCD)
EXISTING 18" SEWER
CI
PROPERTY LINE
CONCRETE SIDEWALK
CONC DWY
ALLEY (CONC)
ALLEY (BIT)
EXISTING 10" SEWER
OUTSIDE NEAT LINES OF PROPOSED SEWER
BITUMINOUS PAVEMENT
PROPOSED INSTALLATION TO BE PERFORMED BY PGL
DI LP
CO
50+00
51+00
52+00
53+00
54+00
55+00
135' TO U/S STRUCTURE
125.5'
(101.1')
66'
30'

PROPOSED PLAN

15° BENDS +39, +53
8" DC
10" DC
18" DC
PROPOSED 54" DIA SEWER FOR PLAN & PROFILE SEE SHEET 17
36'
34.0
34.3
30.1'
33'
4'
STATION EQUATION:
℄ STA 50+61.92 (W 58TH ST) =
℄ STA 46+72.00 (S NATOMA AV)
BASE LINE

MATCHLINE STA 55+00
SEE SHEET NO 19

N

PROPOSED PROFILE

ELEVATION
+40
+35
+30
+25
+20
+15
MODIFIED TYPE "B" MANHOLE
TYPE "B" MANHOLE
EXISTING PAVEMENT
CITY ELECTRIC
6" CI LP GAS
8" CI WATER
EXISTING 10" SEWER
EXISTING 10" SEWER TO BE REMOVED
IE=+24.0±
IE=+21.0± (SUM)
IE=+22.6±
IE=+24.1±
IE=+26.5±
IE=+25.1±
IE=+21.9±
IE=+23.2± (SUM)
IE=+25.0±
10" DC
PROPOSED 54" DIA SEWER FOR PLAN & PROFILE SEE SHEET 17
48" RCP SEWER AT 0.0009 SLOPE
IE=+18.75
IE=+18.90
IE=+19.05
IE=+19.18
50+00
50+29
51+00
51+99
52+00
53+00
53+61
54+00
55+00

HORIZONTAL SCALE 1inch = 20 ft.
20 0 10 20 40 80
VERTICAL SCALE 1inch = 5 ft.
5 0 2.5 5 10 20

$FILE$
$DATE$

PERCENT COMPLETE		DATE
30		11-22-19
60	REV	04-09-20
75	REV	05-28-20
90	REV	08-05-20
100		08-21-20
BULLETIN		

CITY OF CHICAGO
DEPARTMENT OF WATER MANAGEMENT
BUREAU OF ENGINEERING SERVICES

PLAN AND PROFILE
W 58TH ST
S NATOMA AV TO
S NOTTINGHAM AV

DRAWN:
DESIGNED:
CHECKED:
REVIEWED:

OUC EFP-102974

18 OF 69

PN 7500

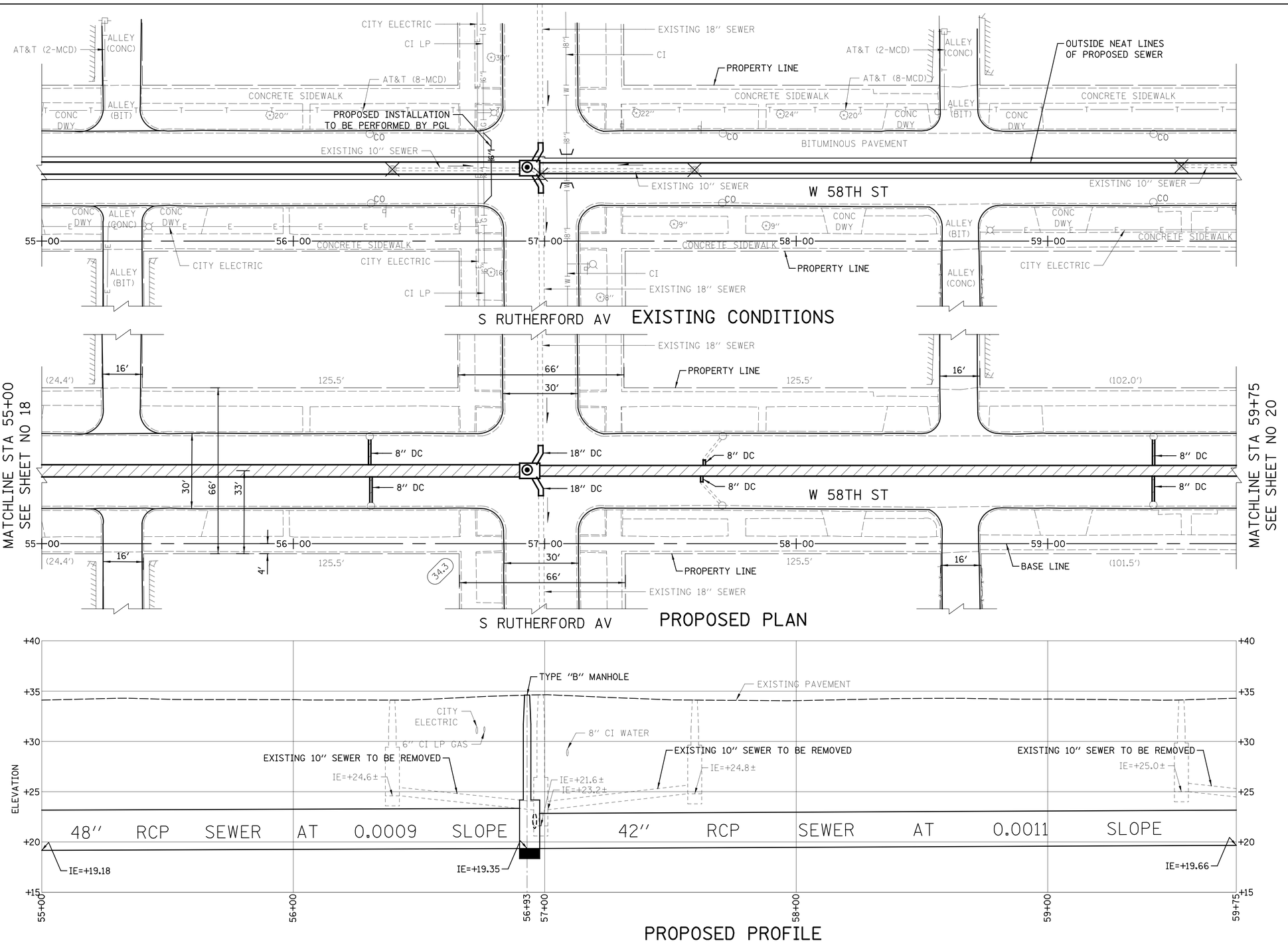

HORIZONTAL SCALE 1inch = 20 ft.

VERTICAL SCALE 1inch = 5 ft.

$FILEL$
$DATE$

PERCENT COMPLETE		DATE
30		11-22-19
60	REV	04-09-20
75	REV	05-28-20
90	REV	08-05-20
100		08-21-20
BULLETIN		

CITY OF CHICAGO
DEPARTMENT OF WATER MANAGEMENT
BUREAU OF ENGINEERING SERVICES

PLAN AND PROFILE
W 58TH ST
S NATOMA AV TO
S NOTTINGHAM AV

DRAWN:
DESIGNED:
CHECKED:
REVIEWED:

OUC EFP-102974

19 OF 69

PN 7500

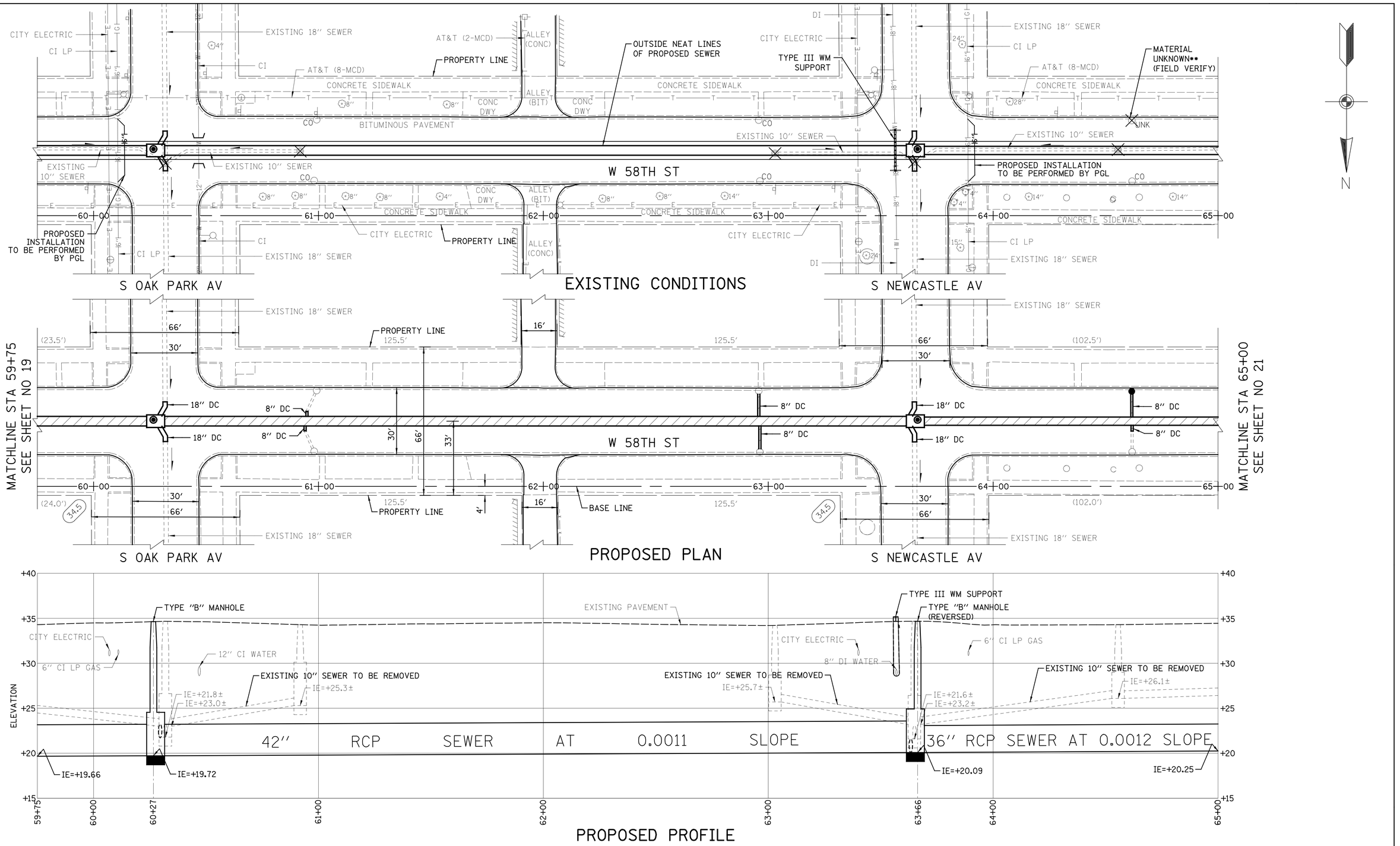

HORIZONTAL SCALE 1inch = 20 ft.

VERTICAL SCALE 1inch = 5 ft.

** NOTE: BRICK CATCH BASINS TO BE REPLACED IN KIND WITH CONCRETE

PERCENT COMPLETE	DATE
30	11-22-19
60 REV	04-09-20
75 REV	05-28-20
90 REV	08-05-20
100	08-21-20
BULLETIN	

CITY OF CHICAGO
DEPARTMENT OF WATER MANAGEMENT
BUREAU OF ENGINEERING SERVICES

PLAN AND PROFILE
W 58TH ST
S NATOMA AV TO
S NOTTINGHAM AV

DRAWN:
DESIGNED:
CHECKED:
REVIEWED:

OUC EFP-102974

20 OF 69

PN 7500

$FILEL$
$DATE$

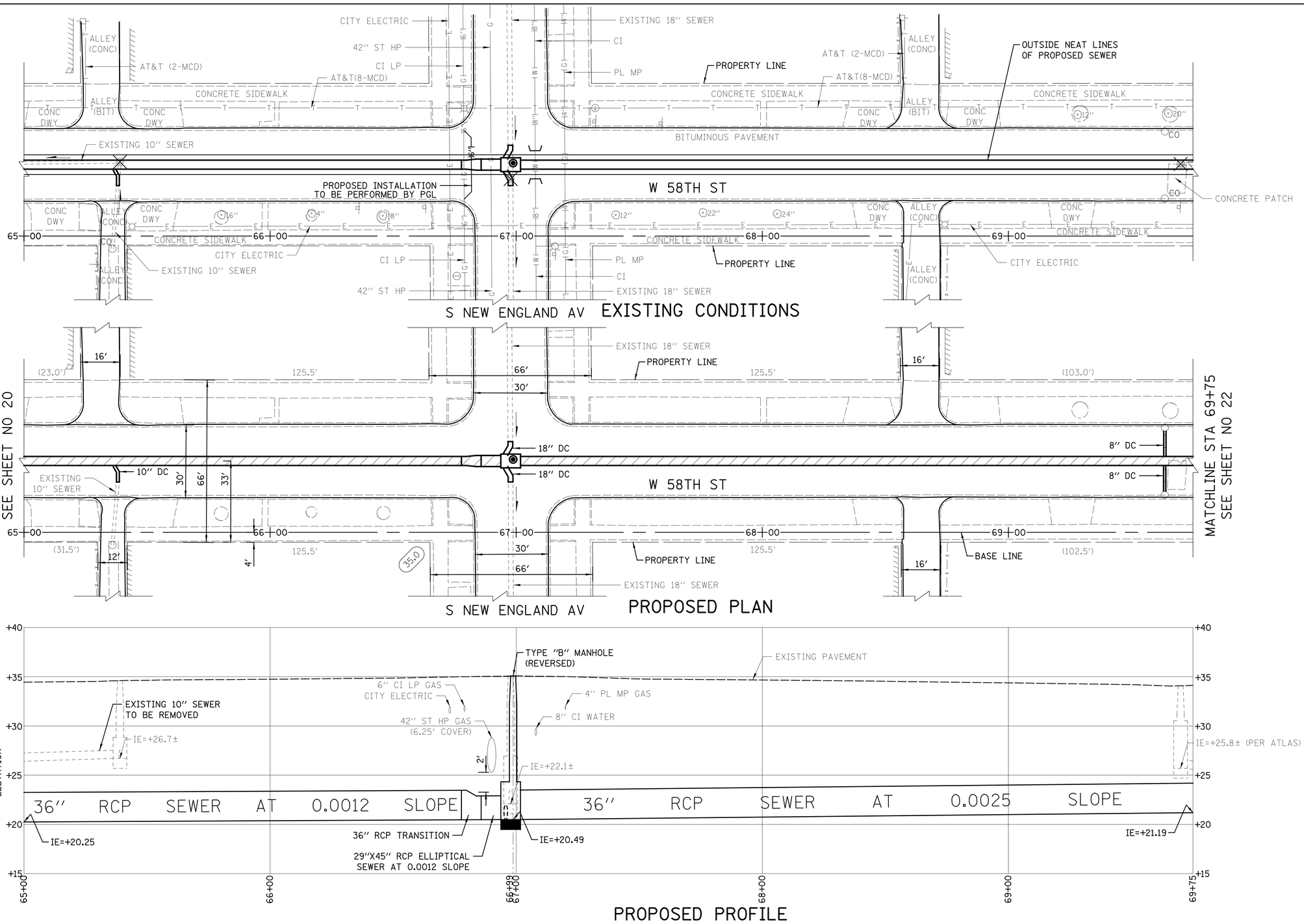

HORIZONTAL SCALE 1inch = 20 ft.

VERTICAL SCALE 1inch = 5 ft.

PEOPLES GAS HIGH PRESSURE GAS MAIN IS PRESENT WITHIN AREA OF CONSTRUCTION. USE EXTREME CAUTION NEAR ALL GAS FACILITIES. HAND EXCAVATION IS REQUIRED TO LOCATE AND EXPOSE GAS MAINS PRIOR TO CROSSING AND WORKING WITHIN 3 FEET OF ALL GAS FACILITIES. CONTRACTOR SHALL CONTACT ERIC WAGENER, 773-542-7879, A MINIMUM OF 3 BUSINESS DAYS PRIOR TO EXCAVATION TO SET UP ON SITE INSPECTION. PEOPLES GAS TO BE ON SITE TO MONITOR CONSTRUCTION ACTIVITIES WHEN WITHIN 3 FEET AND WHENEVER CROSSING HIGH PRESSURE GAS FACILITIES. MAINTAIN A MINIMUM VERTICAL EDGE TO EDGE CLEARANCE OF 24" FROM HIGH PRESSURE GAS MAINS (5' HORIZONTAL)

PERCENT COMPLETE	DATE
30	11-22-19
60 REV	04-09-20
75 REV	05-28-20
90 REV	08-05-20
100	08-21-20
BULLETIN	

CITY OF CHICAGO
DEPARTMENT OF WATER MANAGEMENT
BUREAU OF ENGINEERING SERVICES

PLAN AND PROFILE
W 58TH ST
S NATOMA AV TO
S NOTTINGHAM AV

DRAWN:
DESIGNED:
CHECKED:
REVIEWED:

OUC EFP-102974

21 OF 69

PN 7500

$FILE$
$DATE$

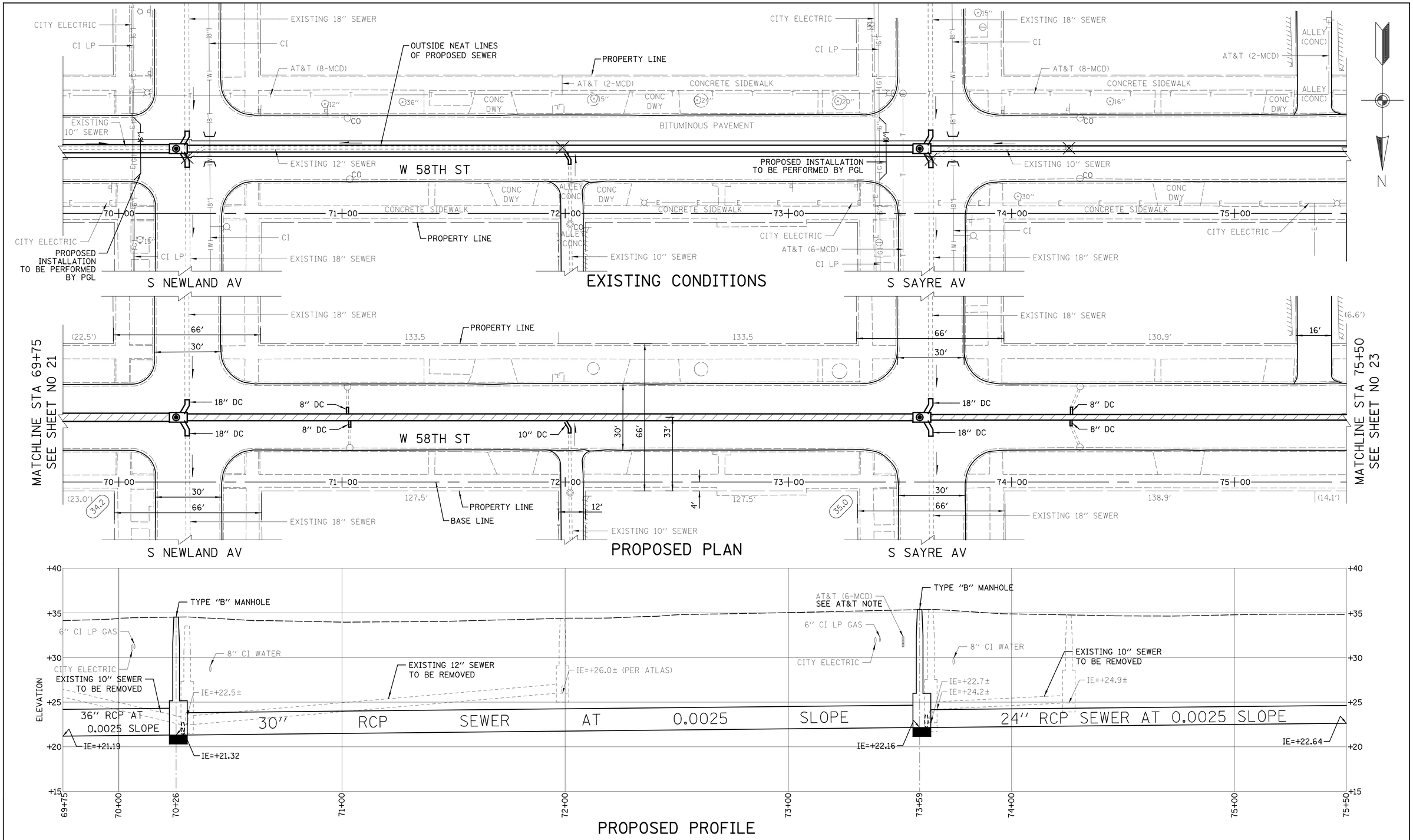

HORIZONTAL SCALE 1inch = 20 ft.

VERTICAL SCALE 1inch = 5 ft.

AT&T NOTE:
PLEASE CONTACT LEGAL MANDATE ENGINEER JEFF KRZYSTOFIAK AT O: (630) 573-5653 OR E: JK1619@ATT.COM AT LEAST (30) DAYS PRIOR TO COMMENCEMENT TO SCHEDULE AND COORDINATE AT&T WORK. ACCORDING TO EXISTING FACILITY RECORDS, AT&T HAS UNDERGROUND FACILITIES WITHIN THE PROJECT LIMITS AS SHOWN ON THE PROPOSED PLANS. USE CAUTION WHEN DIGGING/TRENCHING/BORING NEAR AT&T CONDUIT IN WORK AREA. LOCATE, PROTECT, AND SUPPORT IS REQUIRED. HAND DIG AROUND AT&T FACILITIES. MAINTAIN 12" VERTICAL AND 3' HORIZONTAL CLEARANCE. REQUESTOR ASSUMES ALL LIABILITY FOR DAMAGES TO AT&T FACILITIES. IF IT IS DETERMINED THAT AT&T FACILITIES NEED TO BE ADJUSTED, IT IS CONTRACTOR'S RESPONSIBILITY TO CONTACT AT&T BEFORE PROCEEDING.

PERCENT COMPLETE		DATE
30		11-22-19
60	REV	04-09-20
75	REV	05-28-20
90	REV	08-05-20
100		08-21-20
BULLETIN		

CITY OF CHICAGO
DEPARTMENT OF WATER MANAGEMENT
BUREAU OF ENGINEERING SERVICES

PLAN AND PROFILE
W 58TH ST
S NATOMA AV TO
S NOTTINGHAM AV

DRAWN:
DESIGNED:
CHECKED:
REVIEWED:

OUC EFP-102974

22 OF 69

PN 7500

$FILEL$
$DATE$

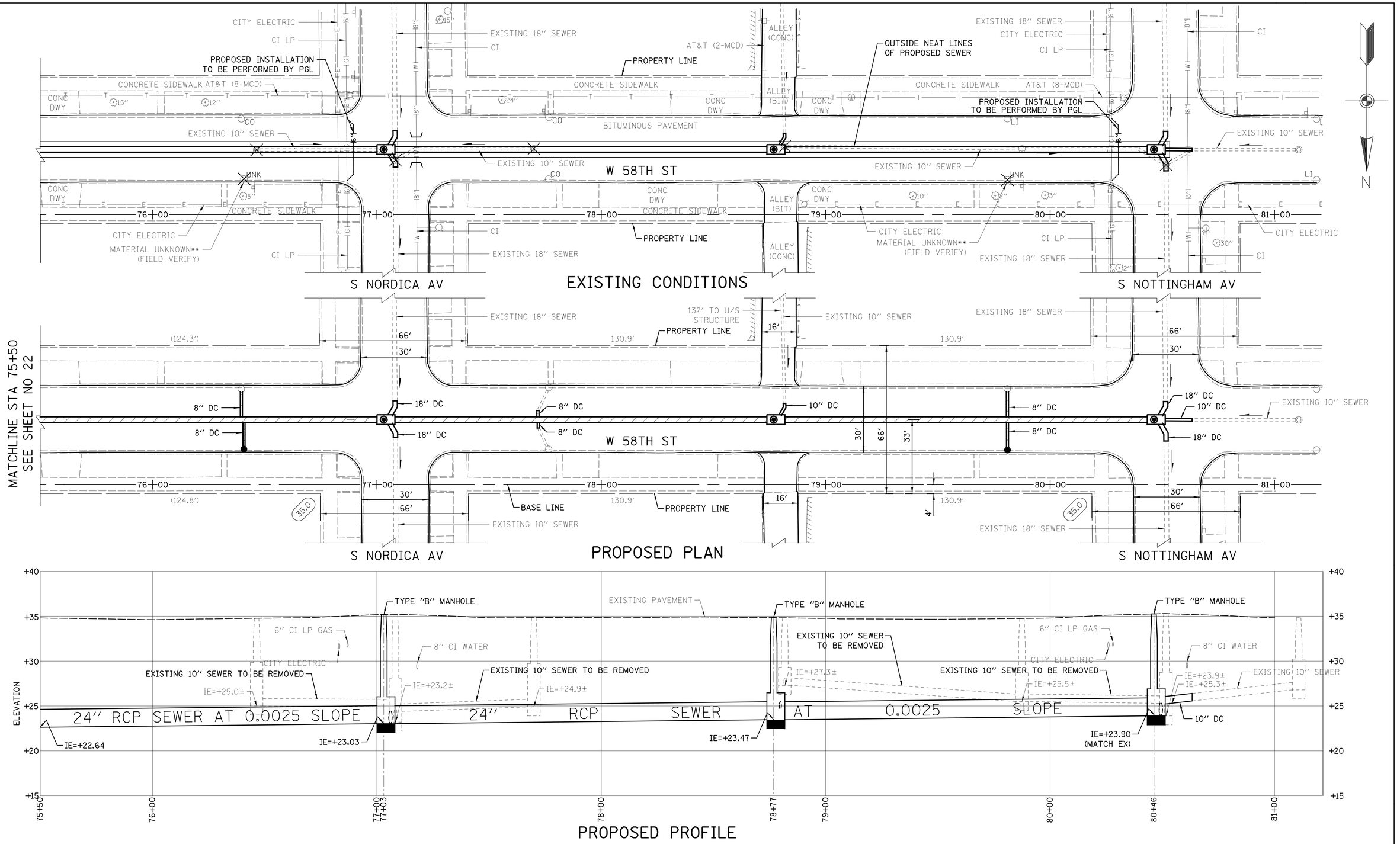

MATCHLINE STA 75+50
SEE SHEET NO 22

HORIZONTAL SCALE 1inch = 20 ft.

VERTICAL SCALE 1inch = 5 ft.

** NOTE: BRICK CATCH BASINS TO BE REPLACED IN KIND WITH CONCRETE

PERCENT COMPLETE	DATE
30	11-22-19
60 REV	04-09-20
75 REV	05-28-20
90 REV	08-05-20
100	08-21-20
BULLETIN	

CITY OF CHICAGO
DEPARTMENT OF WATER MANAGEMENT
BUREAU OF ENGINEERING SERVICES

PLAN AND PROFILE
W 58TH ST
S NATOMA AV TO
S NOTTINGHAM AV

DRAWN:	
DESIGNED:	
CHECKED:	
REVIEWED:	
OUC EFP-102974	
23 OF 69	
PN 7500	

$FILE$
$DATE$

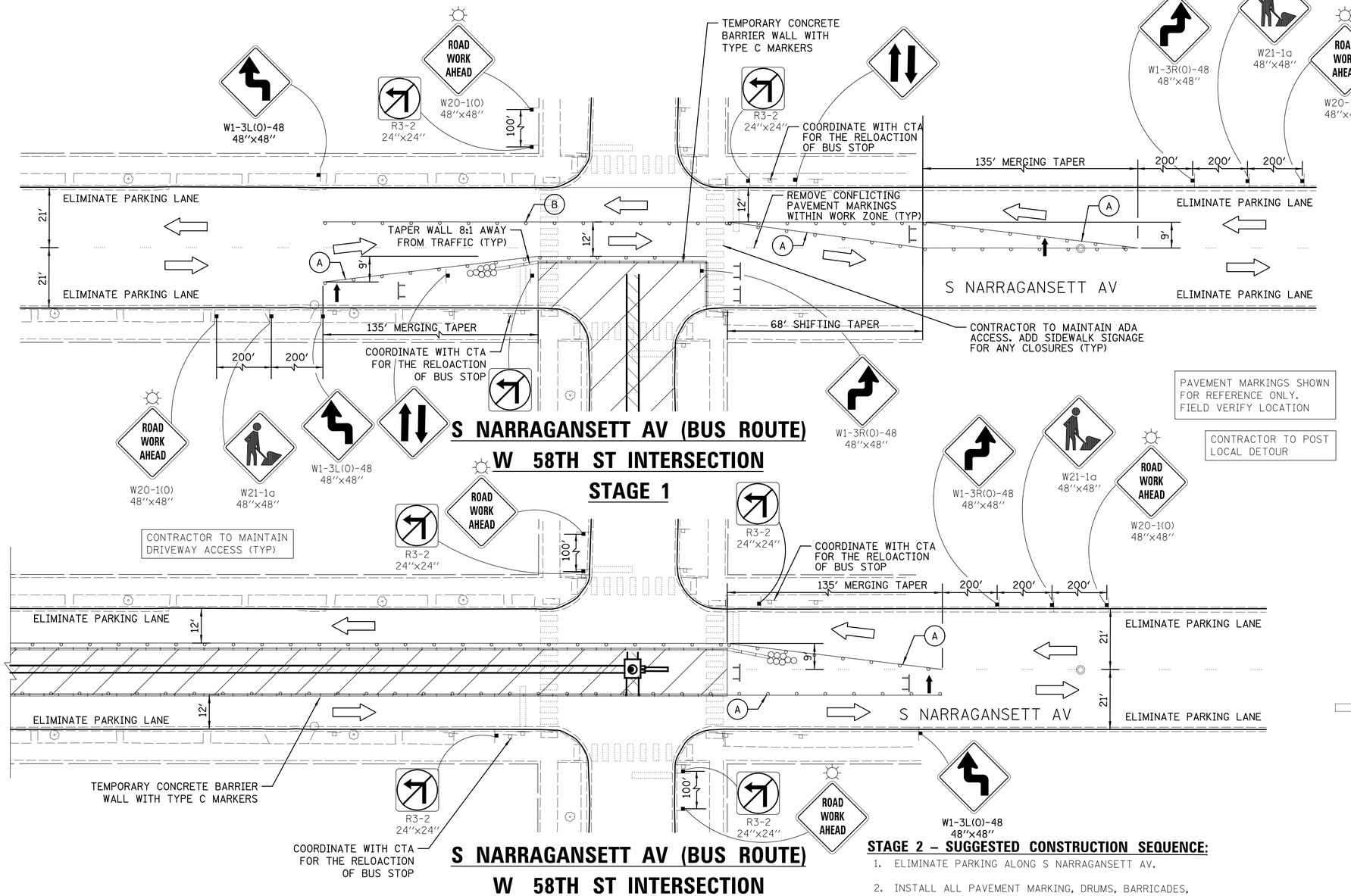

NOTES:

1. CONTRACTOR SHALL NOTIFY NEARBY RESIDENTS AND BUSINESSES OF ON-STREET PARKING CLOSURES.
2. TRAFFIC CONTROL MEASURES SHALL MEET ALL REQUIREMENTS OF THE CHICAGO DEPARTMENT OF TRANSPORTATION RULES AND REGULATIONS FOR CONSTRUCTION IN THE PUBLIC WAY, SECTION 4.4.
3. SEE THE CHICAGO DEPARTMENT OF TRANSPORTATION COMPONENT PARTS OF A TEMPORARY TRAFFIC CONTROL ZONE SHEETS A-6-1A AND A-6-1B FOR TYPICAL TRAFFIC CONTROL INSTALLATIONS.
4. CONTRACTOR SHALL COORDINATE WITH THE CTA FOR THE RELOCATION OR ELIMINATION (IF NECESSARY) OF BUS STOPS ALONG S NARRAGANSETT AV. CONTRACTOR MUST CONTACT CTA A MINIMUM OF TWO (2) WEEKS PRIOR TO ANY BUS SERVICE IMPACTS. CONTACT QUENTIN SHIPLEY-MELLON, (312) 681-4119, QSHIPLEY-MELLON@TRANSITCHICAGO.ORG.
5. IF THE CONTRACTOR DETERMINES THE NEED FOR ANY DETOURS NOT INCLUDED IN THESE PLANS, THEY MUST COORDINATE WITH AND OBTAIN APPROVAL FROM THE CHICAGO DEPARTMENT OF TRANSPORTATION AND OFFICE OF EMERGENCY MANAGEMENT & COMMUNICATIONS PRIOR TO ANY DETOUR SET UP.

STAGE 1 – SUGGESTED CONSTRUCTION SEQUENCE:

1. ELIMINATE PARKING ALONG S NARRAGANSETT AV.
2. INSTALL ALL PAVEMENT MARKING, DRUMS, BARRICADES, SIGNING AS SHOWN. REMOVE CONFLICTING PAVEMENT MARKINGS AND COVER CONFLICTING SIGNS.
3. CONSTRUCT SEWER IN W 58TH STREET.
4. MAINTAIN ONE NORTHBOUND LANE AND ONE SOUTHBOUND LANE IN S NARRAGANSETT AV.
5. BACKFILL AND RESTORE TRENCH. USE STEEL PLATING ONLY AS APPROVED BY CDOT.
6. RESTORE PAVEMENT AND PAVEMENT MARKINGS TO CDOT RULES AND REGULATIONS.
7. REMOVE STAGE 1 TEMPORARY PAVEMENT MARKINGS, DRUMS, BARRICADES, SIGNING, IMPACT ATTENUATORS AND CONCRETE BARRIERS.
8. CONTRACTOR TO MAINTAIN SAME SIDE ADA ACCESS AND ADD SIDEWALK SIGNAGE FOR ANY CLOSURES.
9. CONTRACTOR TO MAINTAIN ACCESS TO ALL DRIVEWAYS

LEGEND

- WORK ZONE
- CONCRETE BARRIER
- EXISTING PAVEMENT MARKING
- PROPOSED PAVEMENT MARKING
- DRUM OR TYPE I BARRICADE W/ FLASHING AMBER LIGHT @ 20′ C-C
- TYPE III BARRICADE
- ARROW BOARD
- IMPACT ATTENUATOR TEST LEVEL 2
- TRAFFIC DIRECTION
- (A) 4″ WHITE LINE
- (B) 4″ DOUBLE YELLOW LINE
- (C) 24″ STOP BAR
- TEMPORARY TRAFFIC SIGN

STAGE 2 – SUGGESTED CONSTRUCTION SEQUENCE:

1. ELIMINATE PARKING ALONG S NARRAGANSETT AV.
2. INSTALL ALL PAVEMENT MARKING, DRUMS, BARRICADES, SIGNING AS SHOWN. REMOVE CONFLICTING PAVEMENT MARKINGS AND COVER CONFLICTING SIGNS.
3. CONSTRUCT SEWER IN S NARRAGANSETT AV.
4. MAINTAIN ONE NORTHBOUND LANE AND ONE SOUTHBOUND LANE IN S NARRAGANSETT AV.
5. BACKFILL AND RESTORE TRENCH. USE STEEL PLATING ONLY AS APPROVED BY CDOT.
6. RESTORE PAVEMENT AND PAVEMENT MARKINGS TO CDOT RULES AND REGULATIONS.
7. REMOVE STAGE 2 TEMPORARY PAVEMENT MARKINGS, DRUMS, BARRICADES, SIGNING, IMPACT ATTENUATORS AND CONCRETE BARRIERS.
8. CONTRACTOR TO MAINTAIN SAME SIDE ADA ACCESS AND ADD SIDEWALK SIGNAGE FOR ANY CLOSURES.
9. CONTRACTOR TO MAINTAIN ACCESS TO ALL DRIVEWAYS.

PERCENT COMPLETE	DATE
30	11-22-19
60 REV	04-09-20
75 REV	05-28-20
90 REV	08-05-20
100	08-21-20
BULLETIN	

CITY OF CHICAGO
DEPARTMENT OF WATER MANAGEMENT
BUREAU OF ENGINEERING SERVICES

SUGGESTED MAINTAINCE OF TRAFFIC
S NARRAGANSETT AV

DRAWN:
DESIGNED:
CHECKED:
REVIEWED:

OUC EFP-102974
24 OF 69
PN 7500

$FILE$
$DATE$

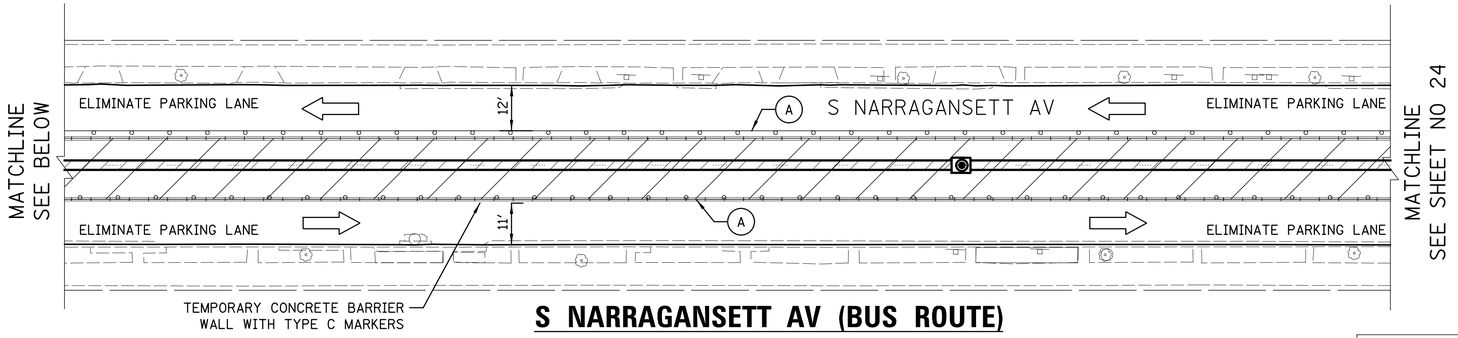

S NARRAGANSETT AV (BUS ROUTE)
BETWEEN W 58TH ST AND W 59TH ST
STAGE 2

CONTRACTOR TO MAINTAIN DRIVEWAY ACCESS (TYP)

PAVEMENT MARKINGS SHOWN FOR REFERENCE ONLY. FIELD VERIFY LOCATION

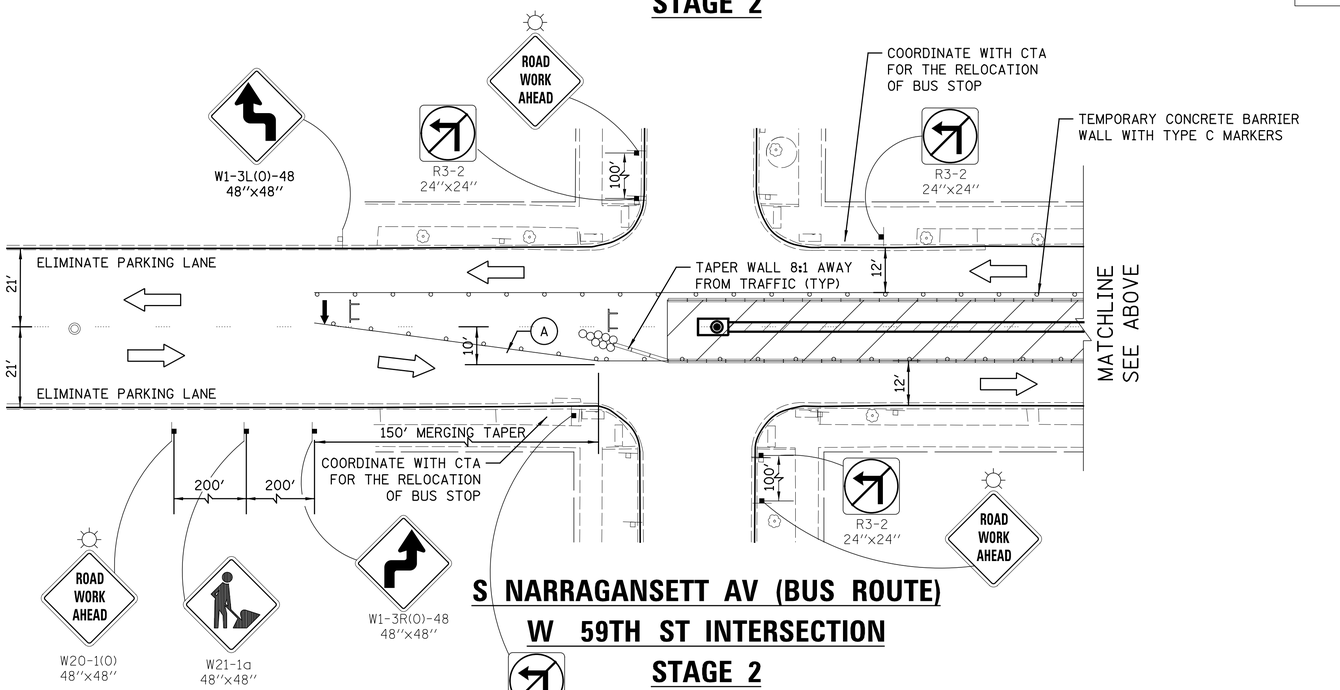

S NARRAGANSETT AV (BUS ROUTE)
W 59TH ST INTERSECTION
STAGE 2

NOTES:

1. CONTRACTOR SHALL NOTIFY NEARBY RESIDENTS AND BUSINESSES OF ON-STREET PARKING CLOSURES.
2. TRAFFIC CONTROL MEASURES SHALL MEET ALL REQUIREMENTS OF THE CHICAGO DEPARTMENT OF TRANSPORTATION RULES AND REGULATIONS FOR CONSTRUCTION IN THE PUBLIC WAY, SECTION 4.4.
3. SEE THE CHICAGO DEPARTMENT OF TRANSPORTATION COMPONENT PARTS OF A TEMPORARY TRAFFIC CONTROL ZONE SHEETS A-6-1A AND A-6-1B FOR TYPICAL TRAFFIC CONTROL INSTALLATIONS.
4. CONTRACTOR SHALL COORDINATE WITH THE CTA FOR THE RELOCATION OR ELIMINATION (IF NECESSARY) OF BUS STOPS ALONG S NARRAGANSETT AV. CONTRACTOR MUST CONTACT CTA A MINIMUM OF TWO (2) WEEKS PRIOR TO ANY BUS SERVICE IMPACTS. CONTACT QUENTIN SHIPLEY-MELLON, (312) 681-4119, QSHIPLEY-MELLON@TRANSITCHICAGO.ORG.
5. IF THE CONTRACTOR DETERMINES THE NEED FOR ANY DETOURS NOT INCLUDED IN THESE PLANS, THEY MUST COORDINATE WITH AND OBTAIN APPROVAL FROM THE CHICAGO DEPARTMENT OF TRANSPORTATION AND OFFICE OF EMERGENCY MANAGEMENT & COMMUNICATIONS PRIOR TO ANY DETOUR SET UP.

STAGE 2 – SUGGESTED CONSTRUCTION SEQUENCE:

1. ELIMINATE PARKING ALONG S NARRAGANSETT AV.
2. INSTALL ALL PAVEMENT MARKING, DRUMS, BARRICADES, SIGNING AS SHOWN. REMOVE CONFLICTING PAVEMENT MARKINGS AND COVER CONFLICTING SIGNS.
3. CONSTRUCT SEWER IN S NARRAGANSETT AV.
4. MAINTAIN ONE NORTHBOUND LANE AND ONE SOUTHBOUND LANE IN W 58TH STREET.
5. BACKFILL AND RESTORE TRENCH. USE STEEL PLATING ONLY AS APPROVED BY CDOT.
6. RESTORE PAVEMENT AND PAVEMENT MARKINGS TO CDOT RULES AND REGULATIONS.
7. REMOVE STAGE 2 TEMPORARY PAVEMENT MARKINGS, DRUMS, BARRICADES, SIGNING, IMPACT ATTENUATORS AND CONCRETE BARRIERS.
8. CONTRACTOR TO MAINTAIN SAME SIDE ADA ACCESS AND ADD SIDEWALK SIGNAGE FOR ANY CLOSURES.
9. CONTRACTOR TO MAINTAIN ACCESS TO ALL DRIVEWAYS

LEGEND

- WORK ZONE
- CONCRETE BARRIER
- EXISTING PAVEMENT MARKING
- PROPOSED PAVEMENT MARKING
- DRUM OR TYPE I BARRICADE W/ FLASHING AMBER LIGHT @ 20' C-C
- TYPE III BARRICADE
- ARROW BOARD
- IMPACT ATTENUATOR TEST LEVEL 2
- TRAFFIC DIRECTION
- (A) 4" WHITE LINE
- (B) 4" DOUBLE YELLOW LINE
- (C) 24" STOP BAR
- TEMPORARY TRAFFIC SIGN

PERCENT COMPLETE		DATE
30		11-22-19
60	REV	04-09-20
75	REV	05-28-20
90	REV	08-05-20
100		08-21-20
BULLETIN		

CITY OF CHICAGO
DEPARTMENT OF WATER MANAGEMENT
BUREAU OF ENGINEERING SERVICES

SUGGESTED MAINTAINCE OF TRAFFIC
S NARRAGANSETT AV

DRAWN:
DESIGNED:
CHECKED:
REVIEWED:

OUC EFP-102974
25 OF 69
PN 7500

$FILE$
$DATE$

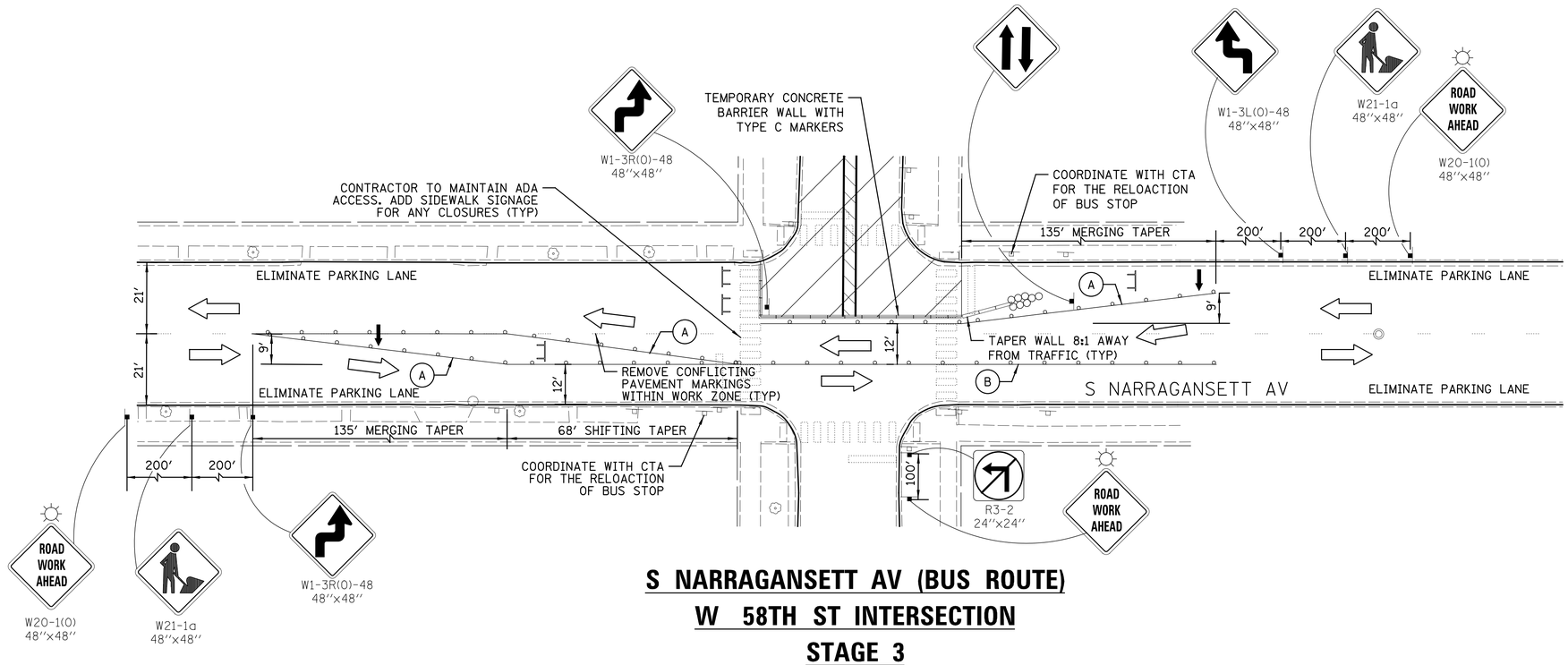

S NARRAGANSETT AV (BUS ROUTE)
W 58TH ST INTERSECTION
STAGE 3

STAGE 3 – SUGGESTED CONSTRUCTION SEQUENCE:

1. ELIMINATE PARKING ALONG S NARRAGANSETT AV.
2. INSTALL ALL PAVEMENT MARKING, DRUMS, BARRICADES, SIGNING AS SHOWN. REMOVE CONFLICTING PAVEMENT MARKINGS AND COVER CONFLICTING SIGNS.
3. CONSTRUCT SEWER IN W 58TH ST.
4. MAINTAIN ONE NORTHBOUND LANE AND ONE SOUTHBOUND LANE IN S NARRAGANSETT AV.
5. BACKFILL AND RESTORE TRENCH. USE STEEL PLATING ONLY AS APPROVED BY CDOT.
6. RESTORE PAVEMENT AND PAVEMENT MARKINGS TO CDOT RULES AND REGULATIONS.
7. REMOVE STAGE 3 TEMPORARY PAVEMENT MARKINGS, DRUMS, BARRICADES, SIGNING, IMPACT ATTENUATORS AND CONCRETE BARRIERS.
8. CONTRACTOR TO MAINTAIN SAME SIDE ADA ACCESS AND ADD SIDEWALK SIGNAGE FOR ANY CLOSURES.
9. CONTRACTOR TO MAINTAIN ACCESS TO ALL DRIVEWAYS

LEGEND

- WORK ZONE
- CONCRETE BARRIER
- EXISTING PAVEMENT MARKING
- PROPOSED PAVEMENT MARKING
- DRUM OR TYPE I BARRICADE W/ FLASHING AMBER LIGHT @ 20' C-C
- TYPE III BARRICADE
- ARROW BOARD
- IMPACT ATTENUATOR TEST LEVEL 2
- TRAFFIC DIRECTION
- (A) 4'' WHITE LINE
- (B) 4'' DOUBLE YELLOW LINE
- (C) 24'' STOP BAR
- TEMPORARY TRAFFIC SIGN

NOTES:

1. CONTRACTOR SHALL NOTIFY NEARBY RESIDENTS AND BUSINESSES OF ON-STREET PARKING CLOSURES.
2. TRAFFIC CONTROL MEASURES SHALL MEET ALL REQUIREMENTS OF THE CHICAGO DEPARTMENT OF TRANSPORTATION RULES AND REGULATIONS FOR CONSTRUCTION IN THE PUBLIC WAY, SECTION 4.4.
3. SEE THE CHICAGO DEPARTMENT OF TRANSPORTATION COMPONENT PARTS OF A TEMPORARY TRAFFIC CONTROL ZONE SHEETS A-6-1A AND A-6-1B FOR TYPICAL TRAFFIC CONTROL INSTALLATIONS.
4. CONTRACTOR SHALL COORDINATE WITH THE CTA FOR THE RELOCATION OR ELIMINATION (IF NECESSARY) OF BUS STOPS ALONG S NARRAGANSETT AV. CONTRACTOR MUST CONTACT CTA A MINIMUM OF TWO (2) WEEKS PRIOR TO ANY BUS SERVICE IMPACTS. CONTACT QUENTIN SHIPLEY-MELLON, (312) 681-4119, QSHIPLEY-MELLON@TRANSITCHICAGO.ORG.
5. IF THE CONTRACTOR DETERMINES THE NEED FOR ANY DETOURS NOT INCLUDED IN THESE PLANS, THEY MUST COORDINATE WITH AND OBTAIN APPROVAL FROM THE CHICAGO DEPARTMENT OF TRANSPORTATION AND OFFICE OF EMERGENCY MANAGEMENT & COMMUNICATIONS PRIOR TO ANY DETOUR SET UP.

PERCENT COMPLETE	DATE
30	11-22-19
60 REV	04-09-20
75 REV	05-28-20
90 REV	08-05-20
100	08-21-20
BULLETIN	

CITY OF CHICAGO
DEPARTMENT OF WATER MANAGEMENT
BUREAU OF ENGINEERING SERVICES

SUGGESTED MAINTAINCE OF TRAFFIC
S NARRAGANSETT AV

DRAWN:
DESIGNED:
CHECKED:
REVIEWED:

OUC EFP-102974

26 OF 69

PN 7500

$FILE$
$DATE$

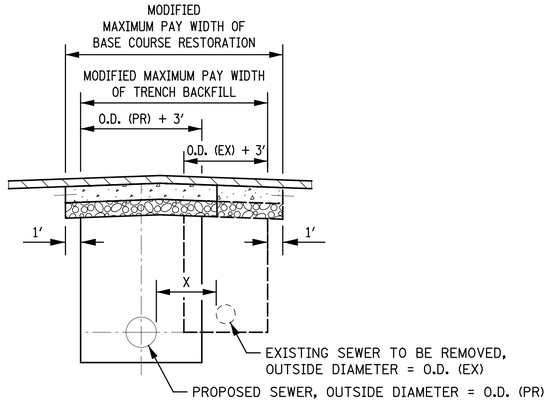

CASE 1: 0′ < X ≤ 3′ - MODIFIED MAXIMUM PAY WIDTH OF BASE COURSE RESTORATION UP TO [O.D. (EX) + 3′] + [O.D. (PR) + 3′] + 2′ AS DIRECTED BY THE COMMISSIONER.

CASE 2: X > 3′ - EXISTING SEWER TO BE ABANDONED IN PLACE AS DIRECTED BY THE COMMISSIONER.

EX. SEWER TO BE REMOVED NEAR EDGE OF TRENCH

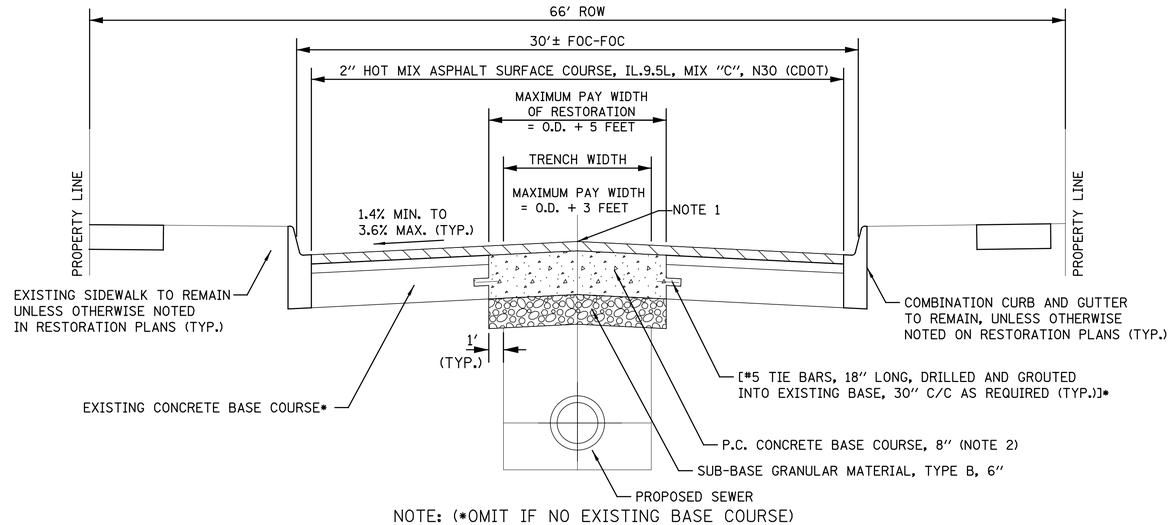

NOTE: (*OMIT IF NO EXISTING BASE COURSE)

PROPOSED PARTIAL PAVEMENT RESTORATION CROSS SECTION

N.T.S.

W 58TH ST FROM S MOBILE AV TO S NOTTINGHAM AV
S NATOMA AV FROM W 57TH ST TO W 58TH ST

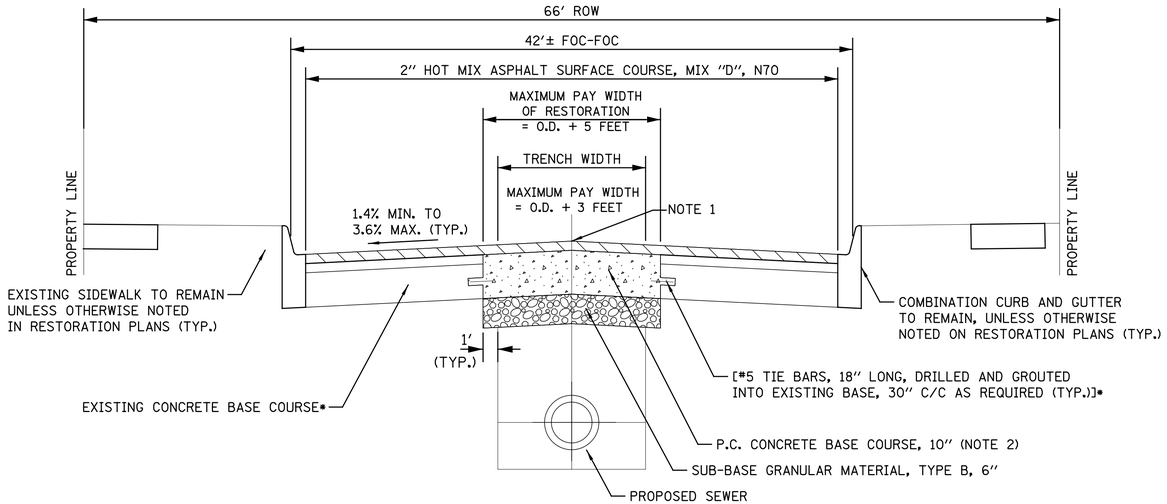

NOTE: (*OMIT IF NO EXISTING BASE COURSE)

PROPOSED PARTIAL PAVEMENT RESTORATION CROSS SECTION

N.T.S.

S NARRAGANSETT AV FROM W 58TH ST TO W 59TH ST

CROSS SECTION NOTES:
1. ADJUST ROADWAY CENTERLINE ELEVATION TO ACHIEVE COMPLIANT CROSS SLOPES

2. USE P.C. CONCRETE BASE COURSE, 8″ MIN. FOR RESIDENTIAL STREETS, AND 10″ MIN. FOR ARTERIAL STREETS.

3. FOR FULL PAVEMENT RESTORATION SEE CDOT STANDARD DETAIL A-2-3A FOR JOINT LAYOUT.

4. FOR FURTHER TRENCH DETAIL INFORMATION, SEE THE SEWER TRENCH DETAIL ON STANDARD DETAIL SHEET A.1

5. TRENCH SHALL BE RESTORED TO FULL WIDTH EXCEPT THE QUANTITY FOR WHICH PAYMENT WILL BE MADE SHALL NOT EXCEED THE MAXIMUM PAY WIDTH.

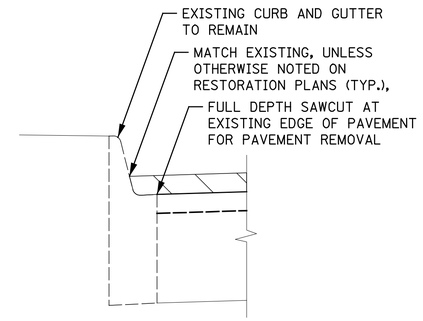

PAVED OVER GUTTER

WHERE THE EXISTING GUTTER IS PAVED OVER RESTORE IN KIND

PERCENT COMPLETE	DATE
30	11-22-19
60 REV	04-09-20
75 REV	05-28-20
90 REV	08-05-20
100	08-21-20
BULLETIN	

CITY OF CHICAGO
DEPARTMENT OF WATER MANAGEMENT
BUREAU OF ENGINEERING SERVICES

TYPICAL SECTIONS

DRAWN:
DESIGNED:
CHECKED:
REVIEWED:

OUC EFP-102974

27 OF 69

PN 7500

$FILE$
$DATE$

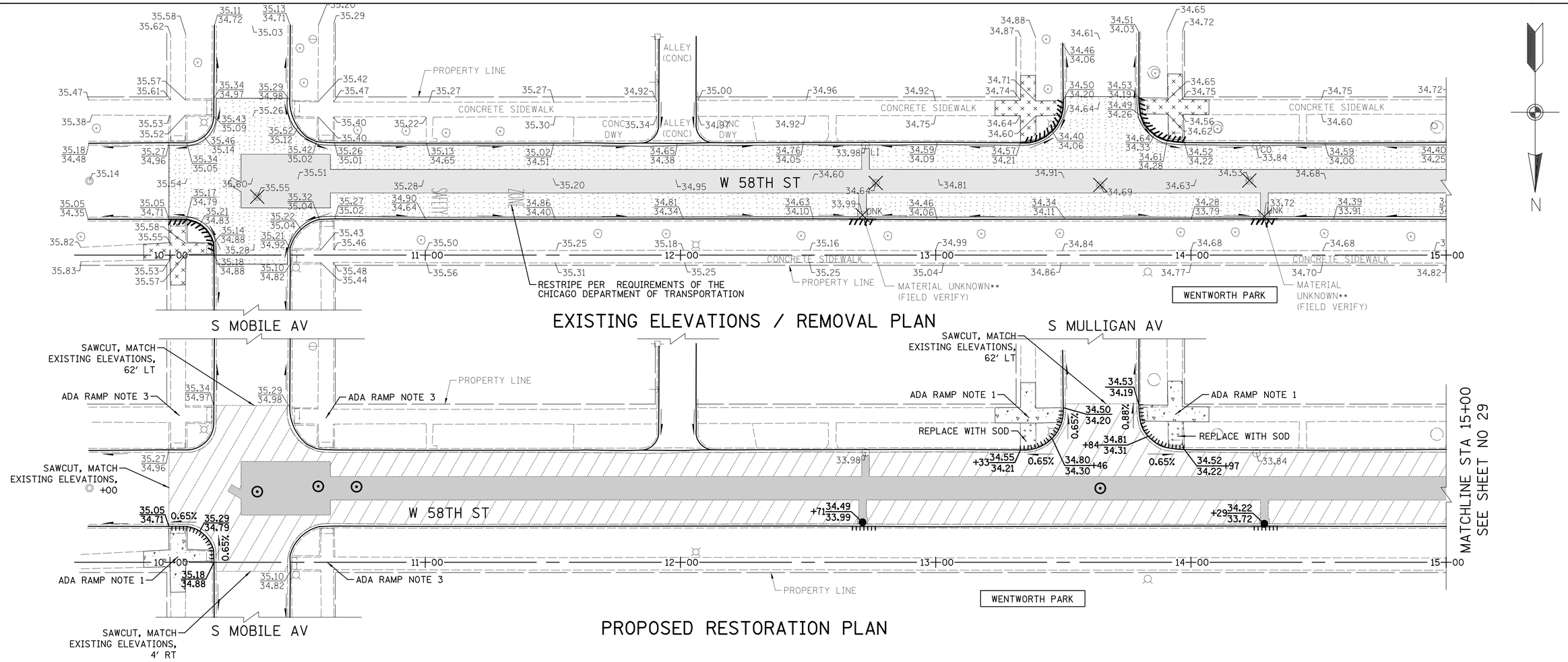

EXISTING ELEVATIONS / REMOVAL PLAN

PROPOSED RESTORATION PLAN

** NOTE: BRICK CATCH BASINS TO BE REPLACED IN KIND WITH CONCRETE

HORIZONTAL SCALE 1inch = 20 ft.

VERTICAL SCALE 1inch = 5 ft.

$FILE$
$DATE$

NOTES:

1. THE EXTENT OF PAVEMENT RESTORATION MUST NOT EXCEED THE LIMITS SHOWN IN THIS DRAWING OR AS DIRECTED BY CDOT RULES AND REGULATIONS AND AS ORDERED BY THE COMMISSIONER

2. CONSTRUCTION OF NEW PAVEMENTS, CONCRETE SIDEWALKS, CURBS, GUTTERS, ALLEY RETURNS, AND DRIVEWAYS MUST CONFORM TO THE LATEST RULES AND REGULATIONS FOR CONSTRUCTION IN THE PUBLIC WAY OF THE CHICAGO DEPARTMENT OF TRANSPORTATION.

3. SEE CHICAGO DEPARTMENT OF TRANSPORTATION ADA CONSTRUCTION STANDARDS FOR ADA RAMP DESIGN.

4. ADJUST ROADWAY CENTERLINE ELEVATION TO ACHIEVE COMPLIANT CROSS SLOPES

5. ROADWAY GRADES AND CROSS SLOPES TO PROMOTE ADEQUATE DRAINAGE AND MITIGATE WATER PONDING IN THE STREET TO BE DETERMINED IN THE FIELD DURING CONSTRUCTION. ANY CHANGE IN PARTIAL OR FULL RESTORATION SHOULD BE VERIFIED WITH DESIGN SECTION BEFORE CONSTRUCTION.

6. SAWCUT 12" BEYOND EDGE OF CONCRETE ALLEY PAVING. PAVE INFILL WITH A MINIMUM 3¾" HOT MIX ASPHALT SURFACE COURSE IL-9.5, MIX "C", N30, LOW ESAL(SEE CDOT DETAIL A-2-8)

ADA RAMP NOTES

1. STANDARD DESIGN
2. SPECIAL DESIGN
3. EXISTING RAMP PASSES - DO NOT REMOVE
4. REMOVE AND REPLACE ADA DETECTABLE TILES

LEGEND

REMOVAL
- FULL DEPTH PAVEMENT REMOVAL
- SURFACE COURSE REMOVAL
- SIDEWALK/DRIVEWAY REMOVAL
- CURB AND GUTTER REMOVAL

PROPOSED
- FULL DEPTH PAVEMENT RECONSTRUCTION
- BITUMINOUS RESURFACING
- SIDEWALK/ DRIVEWAY/ ALLEY REPLACEMENT
- CURB AND GUTTER REPLACEMENT

CALL OUTS
- 13.41 / 13.12 — PROPOSED TOP OF CURB ELEV. / PROPOSED GUTTER ELEV.
- 13.66 — EXISTING ELEVATION
- 13.10 / 13.35 — EXISTING TOP OF CURB ELEV. / EXISTING GUTTER ELEV.
- STRUCTURE TO BE REMOVED
- A — ADJUST FRAME & LID
- PROPOSED CATCH BASIN
- PROPOSED MANHOLE
- DIRECTION OF FLOW
- SUMMIT

PERCENT COMPLETE	DATE
30	11-22-19
60 REV	04-09-20
75 REV	05-28-20
90 REV	08-05-20
100	08-21-20
BULLETIN	

CITY OF CHICAGO
DEPARTMENT OF WATER MANAGEMENT
BUREAU OF ENGINEERING SERVICES

PARTIAL RESTORATION PLAN
W 58TH ST
S MOBILE AV TO
S NASHVILLE AV

DRAWN:
DESIGNED:
CHECKED:
REVIEWED:

OUC EFP-102974

28 OF 69

PN 7500

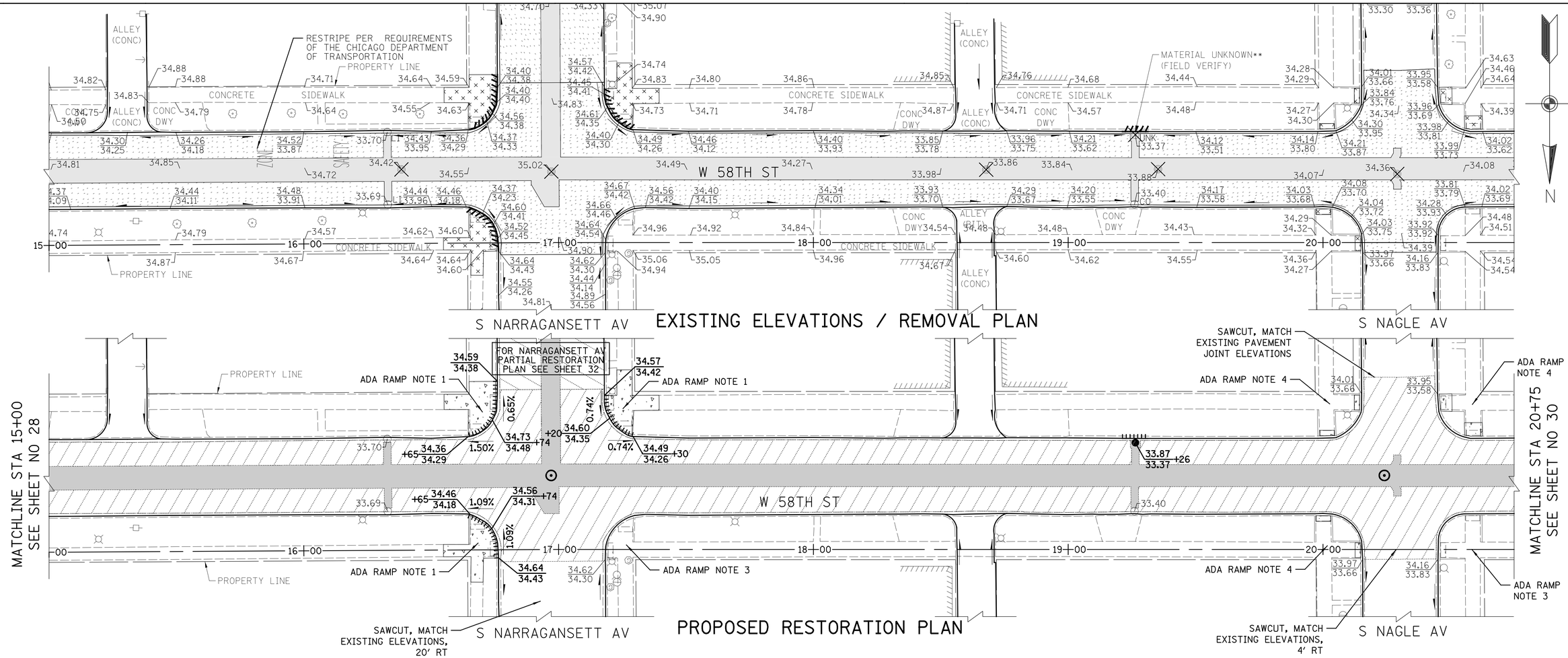

** NOTE: BRICK CATCH BASINS TO BE REPLACED IN KIND WITH CONCRETE

HORIZONTAL SCALE 1 inch = 20 ft.

VERTICAL SCALE 1 inch = 5 ft.

$FILE$
$DATE$

NOTES:

1. THE EXTENT OF PAVEMENT RESTORATION MUST NOT EXCEED THE LIMITS SHOWN IN THIS DRAWING OR AS DIRECTED BY CDOT RULES AND REGULATIONS AND AS ORDERED BY THE COMMISSIONER

2. CONSTRUCTION OF NEW PAVEMENTS, CONCRETE SIDEWALKS, CURBS, GUTTERS, ALLEY RETURNS, AND DRIVEWAYS MUST CONFORM TO THE LATEST RULES AND REGULATIONS FOR CONSTRUCTION IN THE PUBLIC WAY OF THE CHICAGO DEPARTMENT OF TRANSPORTATION.

3. SEE CHICAGO DEPARTMENT OF TRANSPORTATION ADA CONSTRUCTION STANDARDS FOR ADA RAMP DESIGN.

4. ADJUST ROADWAY CENTERLINE ELEVATION TO ACHIEVE COMPLIANT CROSS SLOPES

5. ROADWAY GRADES AND CROSS SLOPES TO PROMOTE ADEQUATE DRAINAGE AND MITIGATE WATER PONDING IN THE STREET TO BE DETERMINED IN THE FIELD DURING CONSTRUCTION. ANY CHANGE IN PARTIAL OR FULL RESTORATION SHOULD BE VERIFIED WITH DESIGN SECTION BEFORE CONSTRUCTION.

6. SAWCUT 12" BEYOND EDGE OF CONCRETE ALLEY PAVING. PAVE INFILL WITH A MINIMUM 3¾" HOT MIX ASPHALT SURFACE COURSE IL-9.5, MIX "C", N30, LOW ESAL(SEE CDOT DETAIL A-2-8)

ADA RAMP NOTES

1. STANDARD DESIGN

2. SPECIAL DESIGN

3. EXISTING RAMP PASSES - DO NOT REMOVE

4. REMOVE AND REPLACE ADA DETECTABLE TILES

LEGEND

REMOVAL

- FULL DEPTH PAVEMENT REMOVAL
- SURFACE COURSE REMOVAL
- SIDEWALK/DRIVEWAY REMOVAL
- CURB AND GUTTER REMOVAL

PROPOSED

- FULL DEPTH PAVEMENT RECONSTRUCTION
- BITUMINOUS RESURFACING
- SIDEWALK/ DRIVEWAY/ ALLEY REPLACEMENT
- CURB AND GUTTER REPLACEMENT

CALL OUTS

- 13.41 / 13.12 — PROPOSED TOP OF CURB ELEV. / PROPOSED GUTTER ELEV.
- 13.66 — EXISTING ELEVATION
- 13.10 / 13.35 — EXISTING TOP OF CURB ELEV. / EXISTING GUTTER ELEV.
- STRUCTURE TO BE REMOVED
- A — ADJUST FRAME & LID
- PROPOSED CATCH BASIN
- PROPOSED MANHOLE
- DIRECTION OF FLOW
- SUMMIT

PERCENT COMPLETE		DATE
30		11-22-19
60	REV	04-09-20
75	REV	05-28-20
90	REV	08-05-20
100		08-21-20
BULLETIN		

CITY OF CHICAGO
DEPARTMENT OF WATER MANAGEMENT
BUREAU OF ENGINEERING SERVICES

PARTIAL RESTORATION PLAN
W 58TH ST
S MOBILE AV TO
S NASHVILLE AV

DRAWN:
DESIGNED:
CHECKED:
REVIEWED:

OUC EFP-102974

29 OF 69

PN 7500

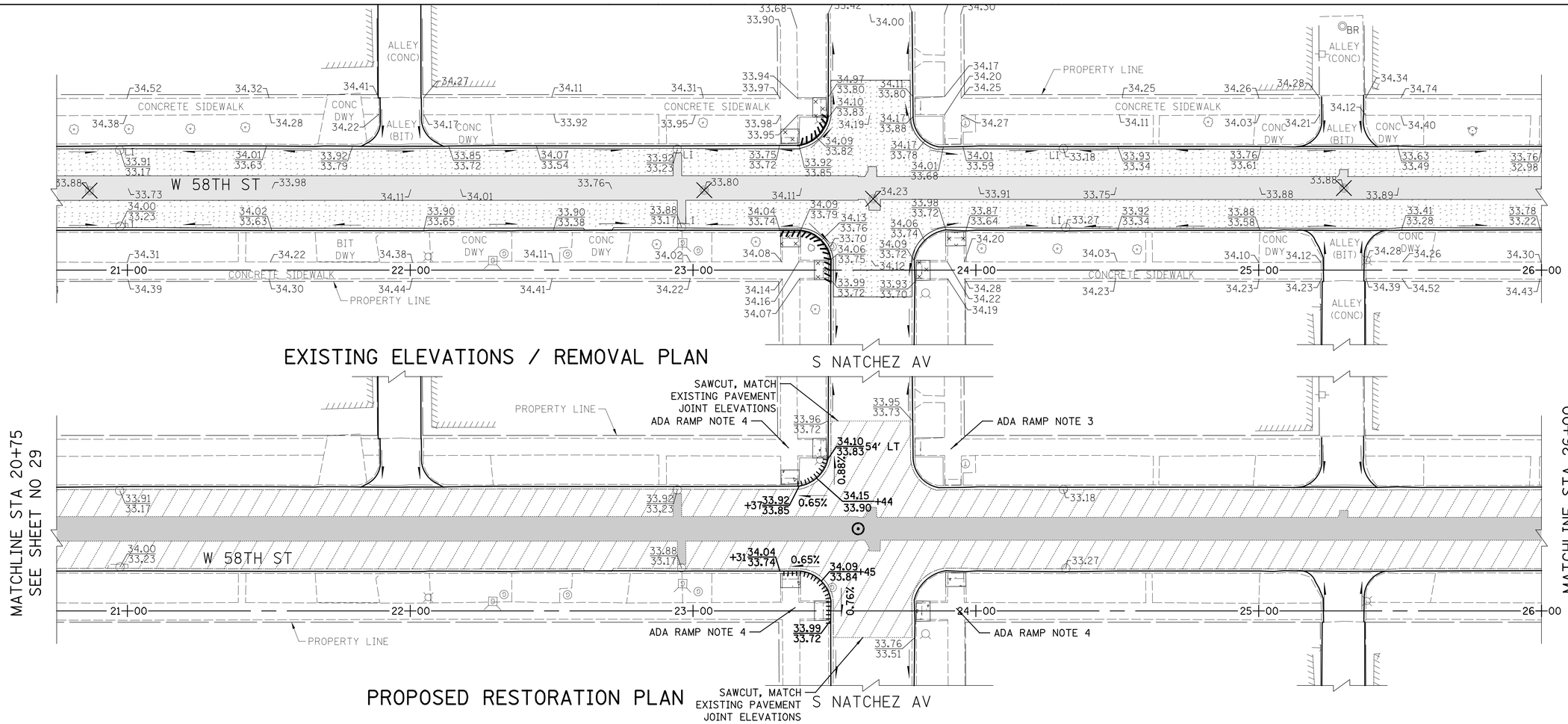

HORIZONTAL SCALE 1inch = 20 ft.

VERTICAL SCALE 1inch = 5 ft.

$FILEL$
$DATE$

NOTES:

1. THE EXTENT OF PAVEMENT RESTORATION MUST NOT EXCEED THE LIMITS SHOWN IN THIS DRAWING OR AS DIRECTED BY CDOT RULES AND REGULATIONS AND AS ORDERED BY THE COMMISSIONER

2. CONSTRUCTION OF NEW PAVEMENTS, CONCRETE SIDEWALKS, CURBS, GUTTERS, ALLEY RETURNS, AND DRIVEWAYS MUST CONFORM TO THE LATEST RULES AND REGULATIONS FOR CONSTRUCTION IN THE PUBLIC WAY OF THE CHICAGO DEPARTMENT OF TRANSPORTATION.

3. SEE CHICAGO DEPARTMENT OF TRANSPORTATION ADA CONSTRUCTION STANDARDS FOR ADA RAMP DESIGN.

4. ADJUST ROADWAY CENTERLINE ELEVATION TO ACHIEVE COMPLIANT CROSS SLOPES

5. ROADWAY GRADES AND CROSS SLOPES TO PROMOTE ADEQUATE DRAINAGE AND MITIGATE WATER PONDING IN THE STREET TO BE DETERMINED IN THE FIELD DURING CONSTRUCTION. ANY CHANGE IN PARTIAL OR FULL RESTORATION SHOULD BE VERIFIED WITH DESIGN SECTION BEFORE CONSTRUCTION.

6. SAWCUT 12" BEYOND EDGE OF CONCRETE ALLEY PAVING. PAVE INFILL WITH A MINIMUM 3¾" HOT MIX ASPHALT SURFACE COURSE IL-9.5, MIX "C", N30, LOW ESAL(SEE CDOT DETAIL A-2-8)

ADA RAMP NOTES

1. STANDARD DESIGN
2. SPECIAL DESIGN
3. EXISTING RAMP PASSES - DO NOT REMOVE
4. REMOVE AND REPLACE ADA DETECTABLE TILES

LEGEND

REMOVAL

- FULL DEPTH PAVEMENT REMOVAL
- SURFACE COURSE REMOVAL
- SIDEWALK/DRIVEWAY REMOVAL
- CURB AND GUTTER REMOVAL

PROPOSED

- FULL DEPTH PAVEMENT RECONSTRUCTION
- BITUMINOUS RESURFACING
- SIDEWALK/ DRIVEWAY/ ALLEY REPLACEMENT
- CURB AND GUTTER REPLACEMENT

CALL OUTS

- 13.41 / 13.12 — PROPOSED TOP OF CURB ELEV. / PROPOSED GUTTER ELEV.
- 13.66 — EXISTING ELEVATION
- 13.10 / 13.35 — EXISTING TOP OF CURB ELEV. / EXISTING GUTTER ELEV.
- STRUCTURE TO BE REMOVED
- A — ADJUST FRAME & LID
- PROPOSED CATCH BASIN
- PROPOSED MANHOLE
- DIRECTION OF FLOW
- SUMMIT

PERCENT COMPLETE	DATE
30	11-22-19
60 REV	04-09-20
75 REV	05-28-20
90 REV	08-05-20
100	08-21-20
BULLETIN	

CITY OF CHICAGO
DEPARTMENT OF WATER MANAGEMENT
BUREAU OF ENGINEERING SERVICES

PARTIAL RESTORATION PLAN
W 58TH ST
S MOBILE AV TO
S NASHVILLE AV

DRAWN:	
DESIGNED:	
CHECKED:	
REVIEWED:	
OUC EFP-102974	
30 OF 69	
PN 7500	

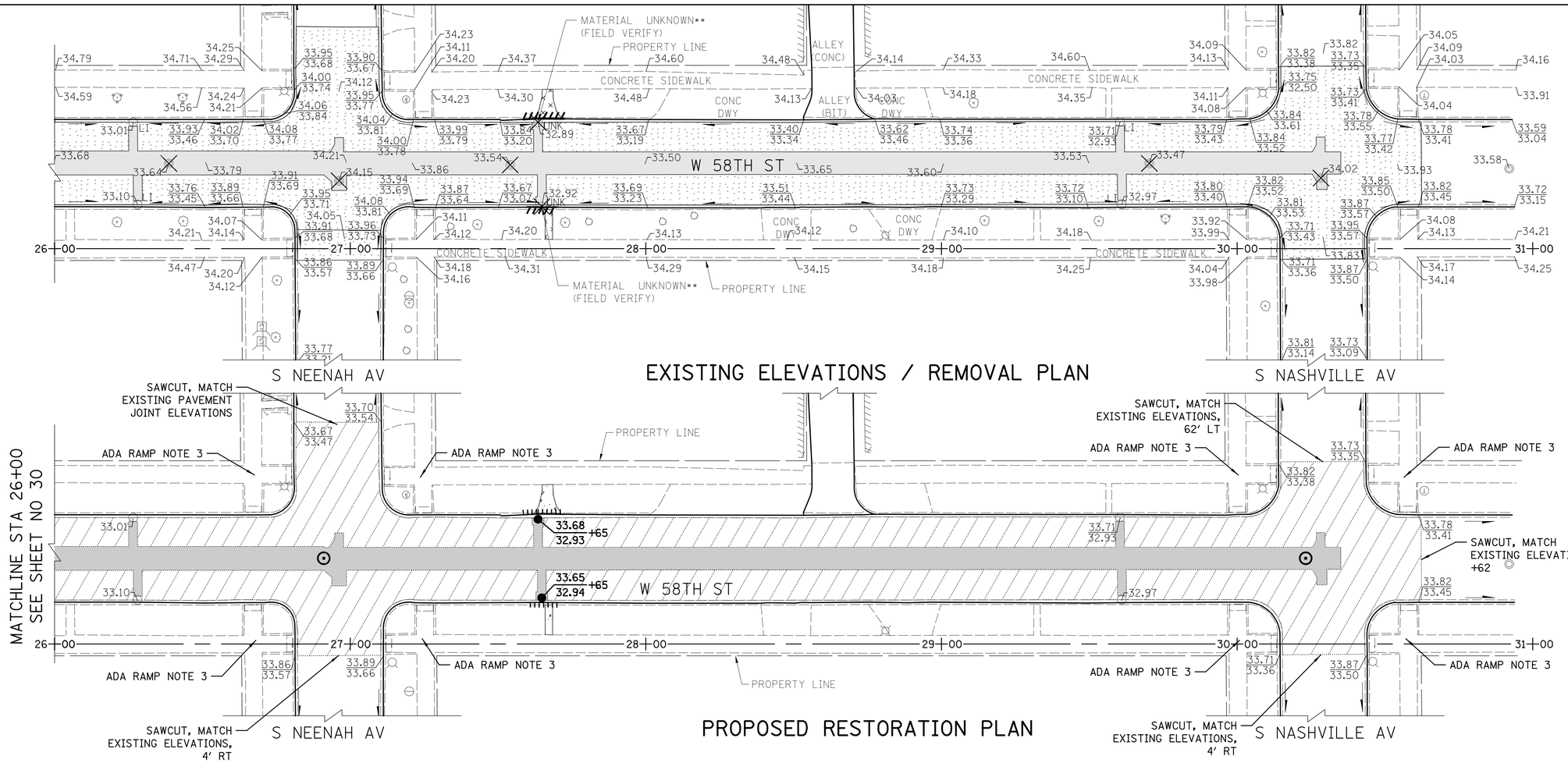

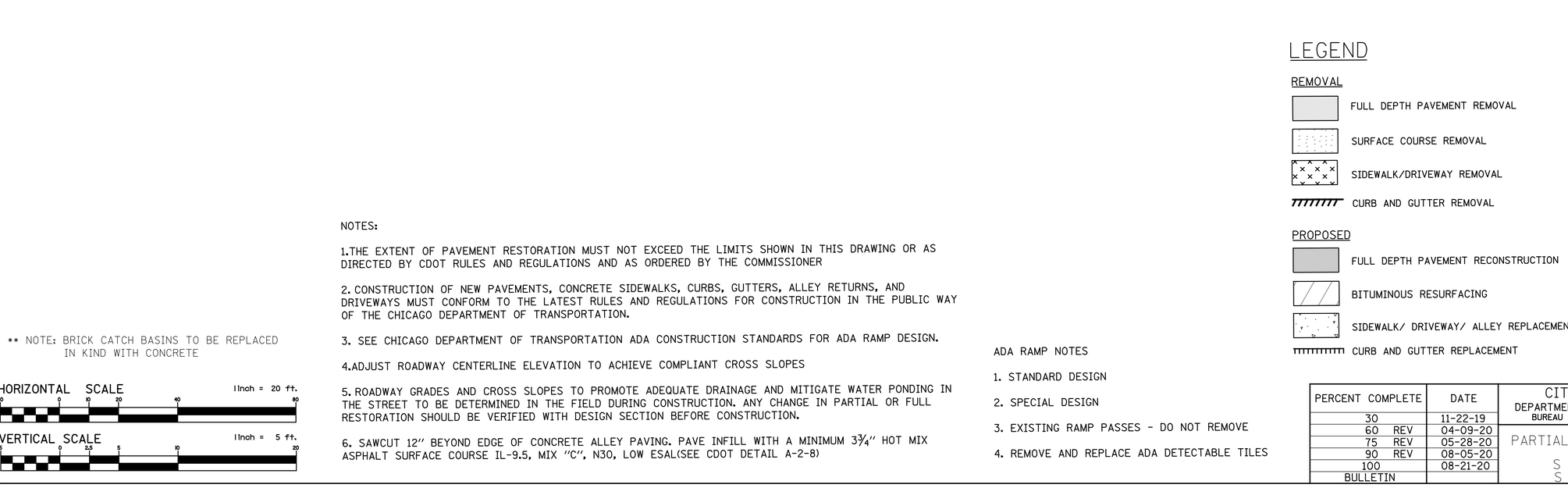

** NOTE: BRICK CATCH BASINS TO BE REPLACED IN KIND WITH CONCRETE

HORIZONTAL SCALE 1inch = 20 ft.

VERTICAL SCALE 1inch = 5 ft.

NOTES:

1. THE EXTENT OF PAVEMENT RESTORATION MUST NOT EXCEED THE LIMITS SHOWN IN THIS DRAWING OR AS DIRECTED BY CDOT RULES AND REGULATIONS AND AS ORDERED BY THE COMMISSIONER
2. CONSTRUCTION OF NEW PAVEMENTS, CONCRETE SIDEWALKS, CURBS, GUTTERS, ALLEY RETURNS, AND DRIVEWAYS MUST CONFORM TO THE LATEST RULES AND REGULATIONS FOR CONSTRUCTION IN THE PUBLIC WAY OF THE CHICAGO DEPARTMENT OF TRANSPORTATION.
3. SEE CHICAGO DEPARTMENT OF TRANSPORTATION ADA CONSTRUCTION STANDARDS FOR ADA RAMP DESIGN.
4. ADJUST ROADWAY CENTERLINE ELEVATION TO ACHIEVE COMPLIANT CROSS SLOPES
5. ROADWAY GRADES AND CROSS SLOPES TO PROMOTE ADEQUATE DRAINAGE AND MITIGATE WATER PONDING IN THE STREET TO BE DETERMINED IN THE FIELD DURING CONSTRUCTION. ANY CHANGE IN PARTIAL OR FULL RESTORATION SHOULD BE VERIFIED WITH DESIGN SECTION BEFORE CONSTRUCTION.
6. SAWCUT 12" BEYOND EDGE OF CONCRETE ALLEY PAVING. PAVE INFILL WITH A MINIMUM 3¾" HOT MIX ASPHALT SURFACE COURSE IL-9.5, MIX "C", N30, LOW ESAL(SEE CDOT DETAIL A-2-8)

ADA RAMP NOTES

1. STANDARD DESIGN
2. SPECIAL DESIGN
3. EXISTING RAMP PASSES - DO NOT REMOVE
4. REMOVE AND REPLACE ADA DETECTABLE TILES

LEGEND

REMOVAL
- FULL DEPTH PAVEMENT REMOVAL
- SURFACE COURSE REMOVAL
- SIDEWALK/DRIVEWAY REMOVAL
- CURB AND GUTTER REMOVAL

PROPOSED
- FULL DEPTH PAVEMENT RECONSTRUCTION
- BITUMINOUS RESURFACING
- SIDEWALK/ DRIVEWAY/ ALLEY REPLACEMENT
- CURB AND GUTTER REPLACEMENT

CALL OUTS
- 13.41 / 13.12 — PROPOSED TOP OF CURB ELEV. / PROPOSED GUTTER ELEV.
- 13.66 — EXISTING ELEVATION
- 13.10 / 13.35 — EXISTING TOP OF CURB ELEV. / EXISTING GUTTER ELEV.
- STRUCTURE TO BE REMOVED
- A — ADJUST FRAME & LID
- PROPOSED CATCH BASIN
- PROPOSED MANHOLE
- DIRECTION OF FLOW
- SUMMIT

PERCENT COMPLETE	DATE
30	11-22-19
60 REV	04-09-20
75 REV	05-28-20
90 REV	08-05-20
100	08-21-20
BULLETIN	

CITY OF CHICAGO
DEPARTMENT OF WATER MANAGEMENT
BUREAU OF ENGINEERING SERVICES

PARTIAL RESTORATION PLAN
W 58TH ST
S MOBILE AV TO
S NASHVILLE AV

DRAWN:
DESIGNED:
CHECKED:
REVIEWED:

OUC EFP-102974

31 OF 69

PN 7500

$FILE$
$DATE$

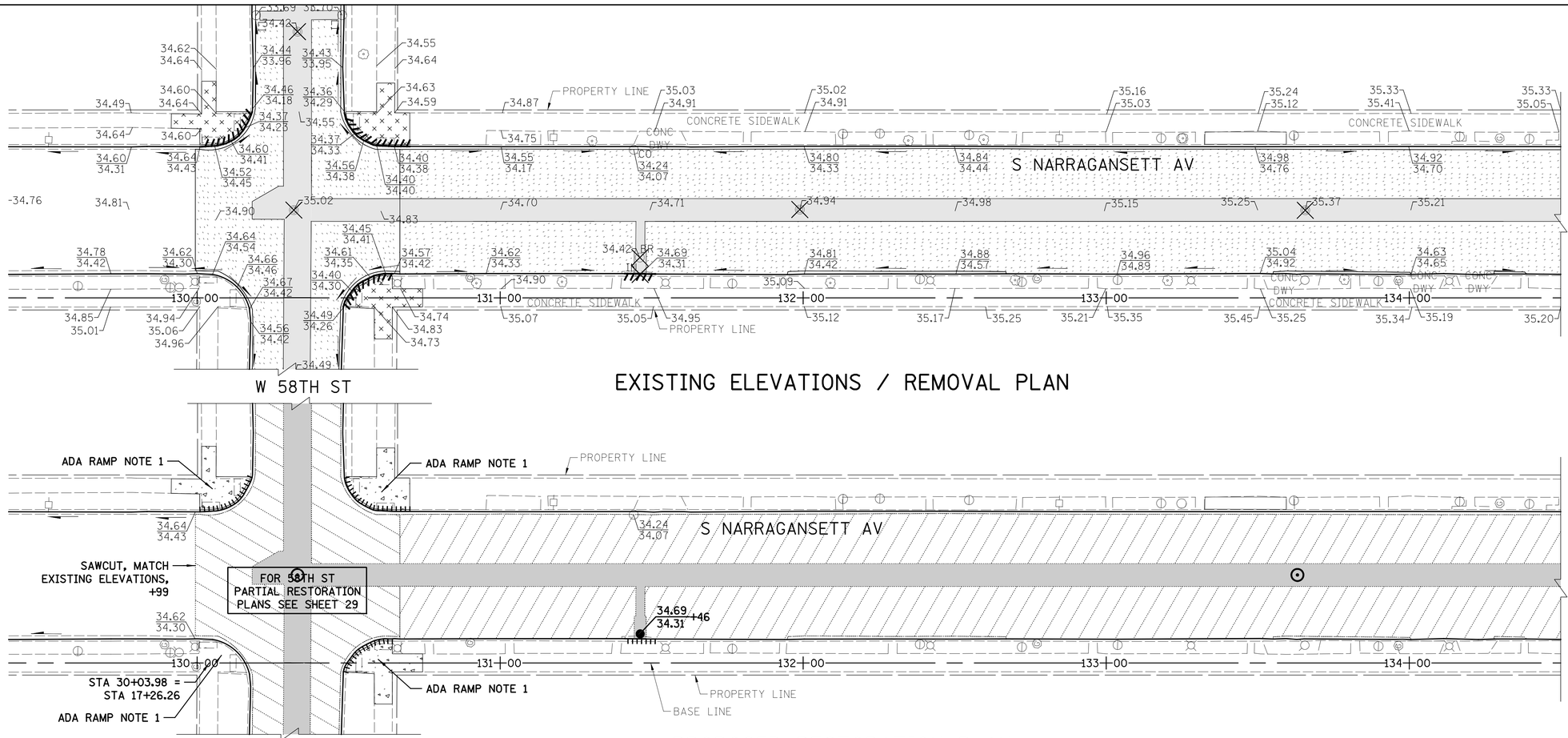

EXISTING ELEVATIONS / REMOVAL PLAN

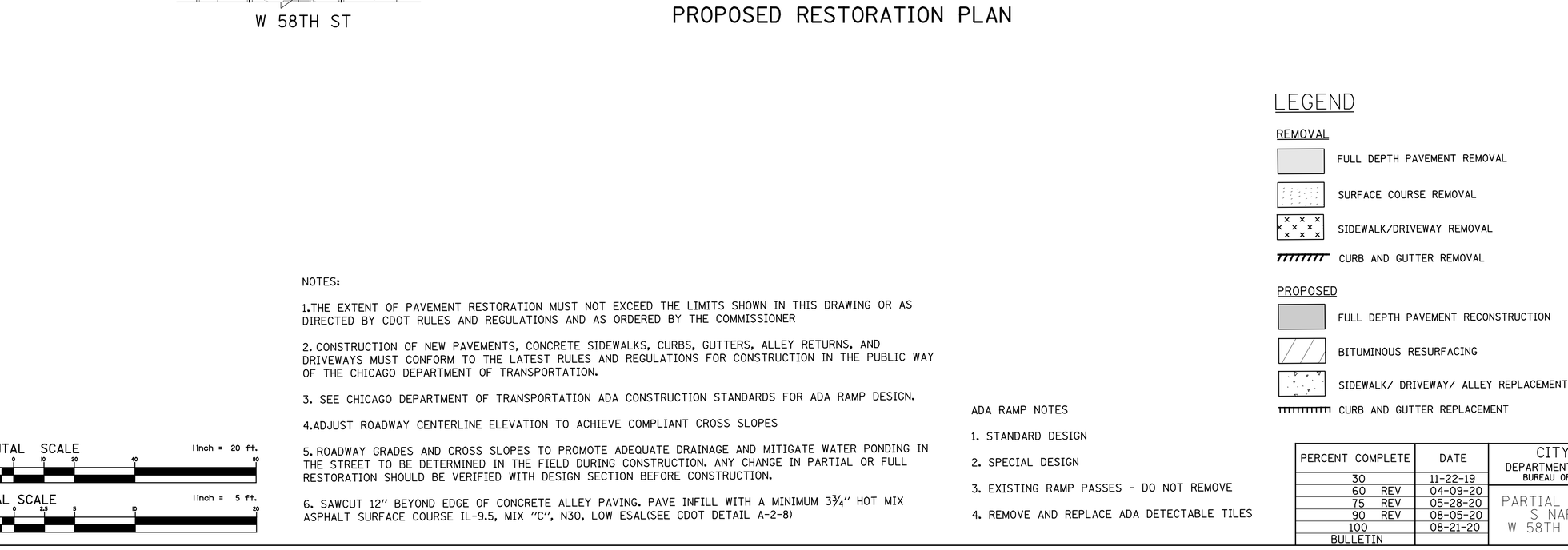

PROPOSED RESTORATION PLAN

LEGEND

REMOVAL

- FULL DEPTH PAVEMENT REMOVAL
- SURFACE COURSE REMOVAL
- SIDEWALK/DRIVEWAY REMOVAL
- CURB AND GUTTER REMOVAL

PROPOSED

- FULL DEPTH PAVEMENT RECONSTRUCTION
- BITUMINOUS RESURFACING
- SIDEWALK/ DRIVEWAY/ ALLEY REPLACEMENT
- CURB AND GUTTER REPLACEMENT

CALL OUTS

- 13.41 / 13.12 — PROPOSED TOP OF CURB ELEV. / PROPOSED GUTTER ELEV.
- 13.66 — EXISTING ELEVATION
- 13.10 / 13.35 — EXISTING TOP OF CURB ELEV. / EXISTING GUTTER ELEV.
- STRUCTURE TO BE REMOVED
- A — ADJUST FRAME & LID
- PROPOSED CATCH BASIN
- PROPOSED MANHOLE
- DIRECTION OF FLOW
- SUMMIT

NOTES:

1. THE EXTENT OF PAVEMENT RESTORATION MUST NOT EXCEED THE LIMITS SHOWN IN THIS DRAWING OR AS DIRECTED BY CDOT RULES AND REGULATIONS AND AS ORDERED BY THE COMMISSIONER
2. CONSTRUCTION OF NEW PAVEMENTS, CONCRETE SIDEWALKS, CURBS, GUTTERS, ALLEY RETURNS, AND DRIVEWAYS MUST CONFORM TO THE LATEST RULES AND REGULATIONS FOR CONSTRUCTION IN THE PUBLIC WAY OF THE CHICAGO DEPARTMENT OF TRANSPORTATION.
3. SEE CHICAGO DEPARTMENT OF TRANSPORTATION ADA CONSTRUCTION STANDARDS FOR ADA RAMP DESIGN.
4. ADJUST ROADWAY CENTERLINE ELEVATION TO ACHIEVE COMPLIANT CROSS SLOPES
5. ROADWAY GRADES AND CROSS SLOPES TO PROMOTE ADEQUATE DRAINAGE AND MITIGATE WATER PONDING IN THE STREET TO BE DETERMINED IN THE FIELD DURING CONSTRUCTION. ANY CHANGE IN PARTIAL OR FULL RESTORATION SHOULD BE VERIFIED WITH DESIGN SECTION BEFORE CONSTRUCTION.
6. SAWCUT 12" BEYOND EDGE OF CONCRETE ALLEY PAVING. PAVE INFILL WITH A MINIMUM 3¾" HOT MIX ASPHALT SURFACE COURSE IL-9.5, MIX "C", N30, LOW ESAL(SEE CDOT DETAIL A-2-8)

ADA RAMP NOTES

1. STANDARD DESIGN
2. SPECIAL DESIGN
3. EXISTING RAMP PASSES - DO NOT REMOVE
4. REMOVE AND REPLACE ADA DETECTABLE TILES

HORIZONTAL SCALE 1inch = 20 ft.

VERTICAL SCALE 1inch = 5 ft.

$FILEL$
$DATE$

PERCENT COMPLETE	DATE
30	11-22-19
60 REV	04-09-20
75 REV	05-28-20
90 REV	08-05-20
100	08-21-20
BULLETIN	

CITY OF CHICAGO
DEPARTMENT OF WATER MANAGEMENT
BUREAU OF ENGINEERING SERVICES

PARTIAL RESTORATION PLAN
S NARRAGANSETT AV
W 58TH ST TO W 59TH ST

DRAWN:
DESIGNED:
CHECKED:
REVIEWED:

OUC EFP-102974

32 OF 69

PN 7500

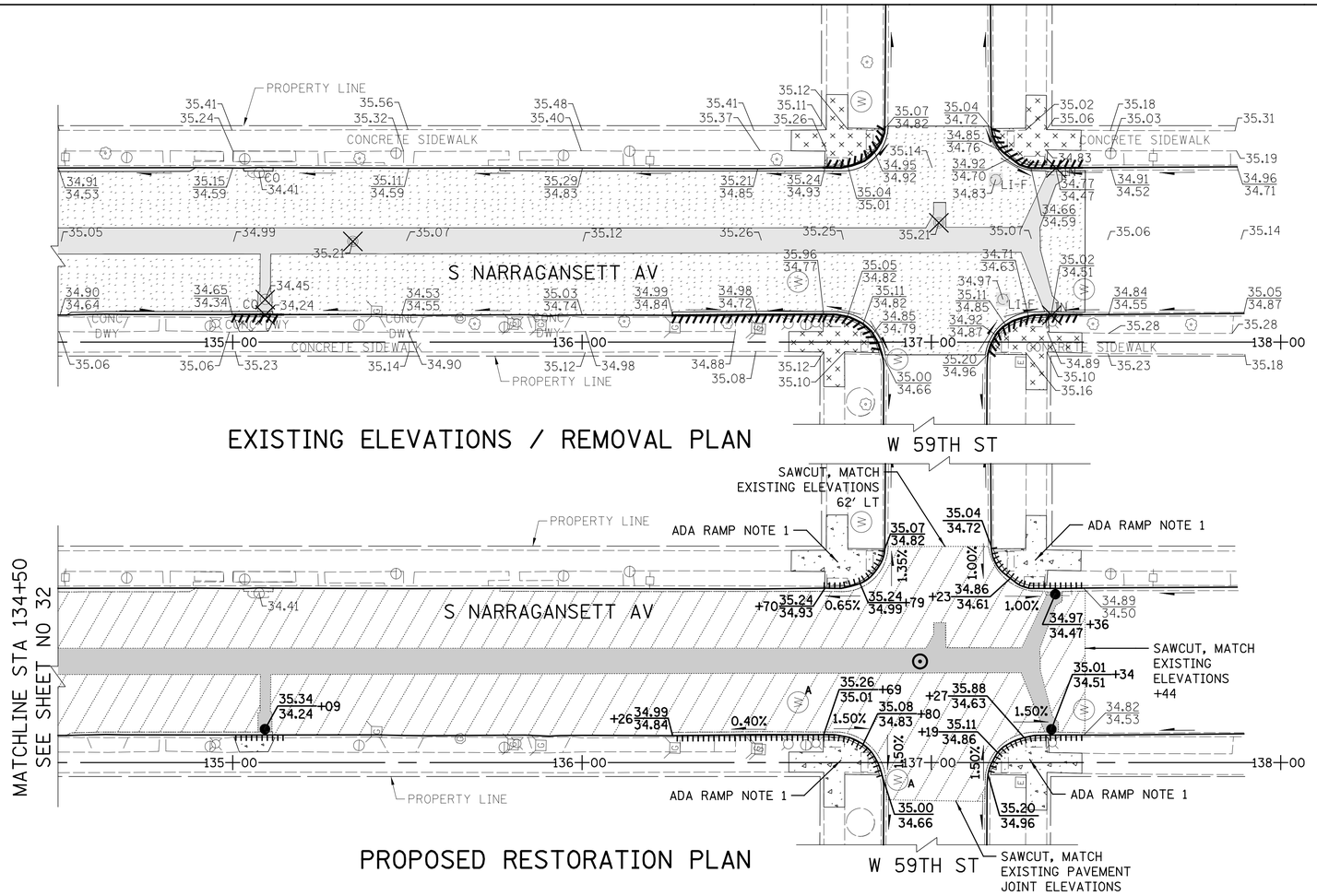

EXISTING ELEVATIONS / REMOVAL PLAN

PROPOSED RESTORATION PLAN

HORIZONTAL SCALE 1inch = 20 ft.

VERTICAL SCALE 1inch = 5 ft.

$FILEL$
$DATE$

NOTES:

1. THE EXTENT OF PAVEMENT RESTORATION MUST NOT EXCEED THE LIMITS SHOWN IN THIS DRAWING OR AS DIRECTED BY CDOT RULES AND REGULATIONS AND AS ORDERED BY THE COMMISSIONER

2. CONSTRUCTION OF NEW PAVEMENTS, CONCRETE SIDEWALKS, CURBS, GUTTERS, ALLEY RETURNS, AND DRIVEWAYS MUST CONFORM TO THE LATEST RULES AND REGULATIONS FOR CONSTRUCTION IN THE PUBLIC WAY OF THE CHICAGO DEPARTMENT OF TRANSPORTATION.

3. SEE CHICAGO DEPARTMENT OF TRANSPORTATION ADA CONSTRUCTION STANDARDS FOR ADA RAMP DESIGN.

4. ADJUST ROADWAY CENTERLINE ELEVATION TO ACHIEVE COMPLIANT CROSS SLOPES

5. ROADWAY GRADES AND CROSS SLOPES TO PROMOTE ADEQUATE DRAINAGE AND MITIGATE WATER PONDING IN THE STREET TO BE DETERMINED IN THE FIELD DURING CONSTRUCTION. ANY CHANGE IN PARTIAL OR FULL RESTORATION SHOULD BE VERIFIED WITH DESIGN SECTION BEFORE CONSTRUCTION.

6. SAWCUT 12" BEYOND EDGE OF CONCRETE ALLEY PAVING. PAVE INFILL WITH A MINIMUM 3¾" HOT MIX ASPHALT SURFACE COURSE IL-9.5, MIX "C", N30, LOW ESAL(SEE CDOT DETAIL A-2-8)

ADA RAMP NOTES

1. STANDARD DESIGN
2. SPECIAL DESIGN
3. EXISTING RAMP PASSES - DO NOT REMOVE
4. REMOVE AND REPLACE ADA DETECTABLE TILES

LEGEND

REMOVAL

- FULL DEPTH PAVEMENT REMOVAL
- SURFACE COURSE REMOVAL
- SIDEWALK/DRIVEWAY REMOVAL
- CURB AND GUTTER REMOVAL

PROPOSED

- FULL DEPTH PAVEMENT RECONSTRUCTION
- BITUMINOUS RESURFACING
- SIDEWALK/ DRIVEWAY/ ALLEY REPLACEMENT
- CURB AND GUTTER REPLACEMENT

CALL OUTS

- 13.41 / 13.12 — PROPOSED TOP OF CURB ELEV. / PROPOSED GUTTER ELEV.
- 13.66 — EXISTING ELEVATION
- 13.10 / 13.35 — EXISTING TOP OF CURB ELEV. / EXISTING GUTTER ELEV.
- STRUCTURE TO BE REMOVED
- A — ADJUST FRAME & LID
- PROPOSED CATCH BASIN
- PROPOSED MANHOLE
- DIRECTION OF FLOW
- SUMMIT

PERCENT COMPLETE	DATE
30	11-22-19
60 REV	04-09-20
75 REV	05-28-20
90 REV	08-05-20
100	08-21-20
BULLETIN	

CITY OF CHICAGO
DEPARTMENT OF WATER MANAGEMENT
BUREAU OF ENGINEERING SERVICES

PARTIAL RESTORATION PLAN
S NARRAGANSETT AV
W 58TH ST TO W 59TH ST

DRAWN:
DESIGNED:
CHECKED:
REVIEWED:

OUC EFP-102974

33 OF 69

PN 7500

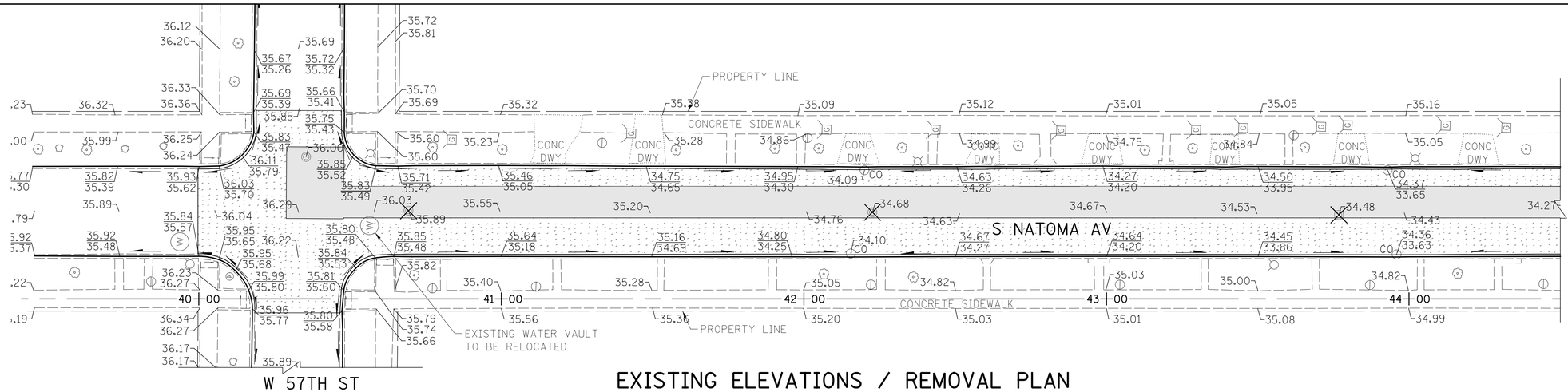

EXISTING ELEVATIONS / REMOVAL PLAN

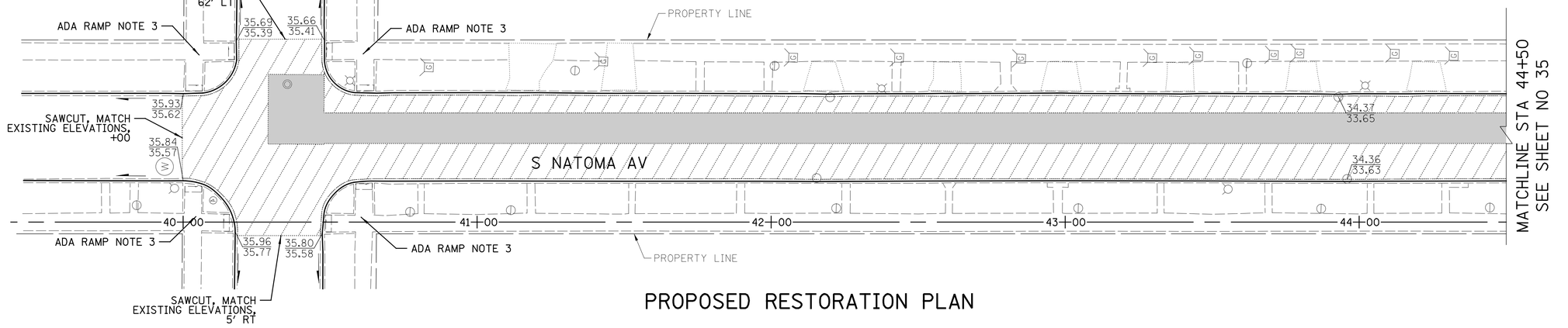

PROPOSED RESTORATION PLAN

HORIZONTAL SCALE 1inch = 20 ft.

VERTICAL SCALE 1inch = 5 ft.

$FILE$
$DATE$

NOTES:

1.THE EXTENT OF PAVEMENT RESTORATION MUST NOT EXCEED THE LIMITS SHOWN IN THIS DRAWING OR AS DIRECTED BY CDOT RULES AND REGULATIONS AND AS ORDERED BY THE COMMISSIONER

2. CONSTRUCTION OF NEW PAVEMENTS, CONCRETE SIDEWALKS, CURBS, GUTTERS, ALLEY RETURNS, AND DRIVEWAYS MUST CONFORM TO THE LATEST RULES AND REGULATIONS FOR CONSTRUCTION IN THE PUBLIC WAY OF THE CHICAGO DEPARTMENT OF TRANSPORTATION.

3. SEE CHICAGO DEPARTMENT OF TRANSPORTATION ADA CONSTRUCTION STANDARDS FOR ADA RAMP DESIGN.

4.ADJUST ROADWAY CENTERLINE ELEVATION TO ACHIEVE COMPLIANT CROSS SLOPES

5. ROADWAY GRADES AND CROSS SLOPES TO PROMOTE ADEQUATE DRAINAGE AND MITIGATE WATER PONDING IN THE STREET TO BE DETERMINED IN THE FIELD DURING CONSTRUCTION. ANY CHANGE IN PARTIAL OR FULL RESTORATION SHOULD BE VERIFIED WITH DESIGN SECTION BEFORE CONSTRUCTION.

6. SAWCUT 12" BEYOND EDGE OF CONCRETE ALLEY PAVING. PAVE INFILL WITH A MINIMUM 3¾" HOT MIX ASPHALT SURFACE COURSE IL-9.5, MIX "C", N30, LOW ESAL(SEE CDOT DETAIL A-2-8)

ADA RAMP NOTES

1. STANDARD DESIGN

2. SPECIAL DESIGN

3. EXISTING RAMP PASSES - DO NOT REMOVE

4. REMOVE AND REPLACE ADA DETECTABLE TILES

LEGEND

REMOVAL

- FULL DEPTH PAVEMENT REMOVAL
- SURFACE COURSE REMOVAL
- SIDEWALK/DRIVEWAY REMOVAL
- CURB AND GUTTER REMOVAL

PROPOSED

- FULL DEPTH PAVEMENT RECONSTRUCTION
- BITUMINOUS RESURFACING
- SIDEWALK/ DRIVEWAY/ ALLEY REPLACEMENT
- CURB AND GUTTER REPLACEMENT

CALL OUTS

- 13.41 / 13.12 — PROPOSED TOP OF CURB ELEV. / PROPOSED GUTTER ELEV.
- 13.66 — EXISTING ELEVATION
- 13.10 / 13.35 — EXISTING TOP OF CURB ELEV. / EXISTING GUTTER ELEV.
- STRUCTURE TO BE REMOVED
- A — ADJUST FRAME & LID
- PROPOSED CATCH BASIN
- PROPOSED MANHOLE
- DIRECTION OF FLOW
- SUMMIT

PERCENT COMPLETE	DATE
30	11-22-19
60 REV	04-09-20
75 REV	05-28-20
90 REV	08-05-20
100	08-21-20
BULLETIN	

CITY OF CHICAGO
DEPARTMENT OF WATER MANAGEMENT
BUREAU OF ENGINEERING SERVICES

PARTIAL RESTORATION PLAN
S NATOMA AV
W 57TH ST TO W 58TH ST

DRAWN:
DESIGNED:
CHECKED:
REVIEWED:

OUC EFP-102974

34 OF 69

PN 7500

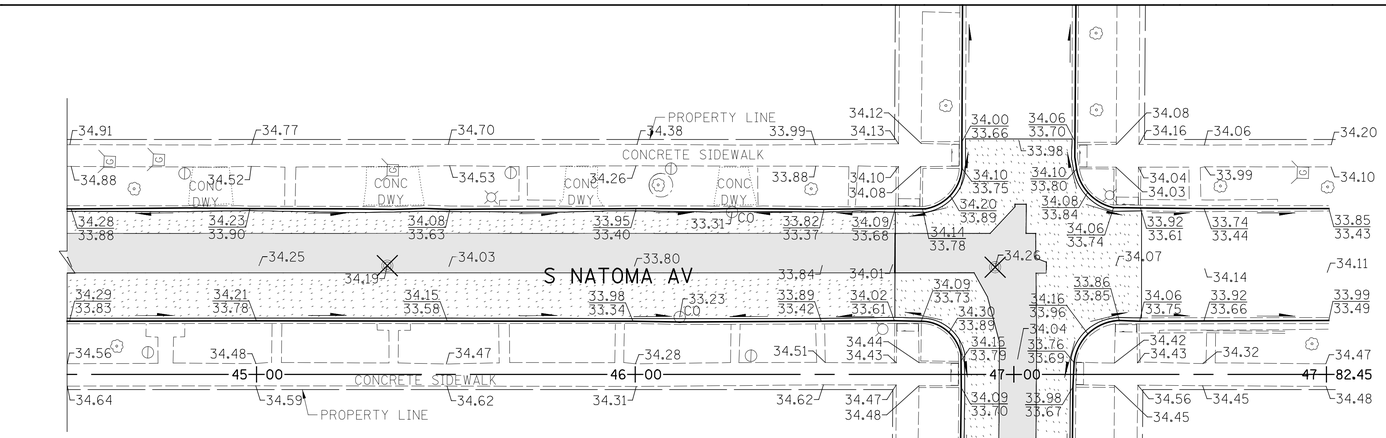

EXISTING ELEVATIONS / REMOVAL PLAN

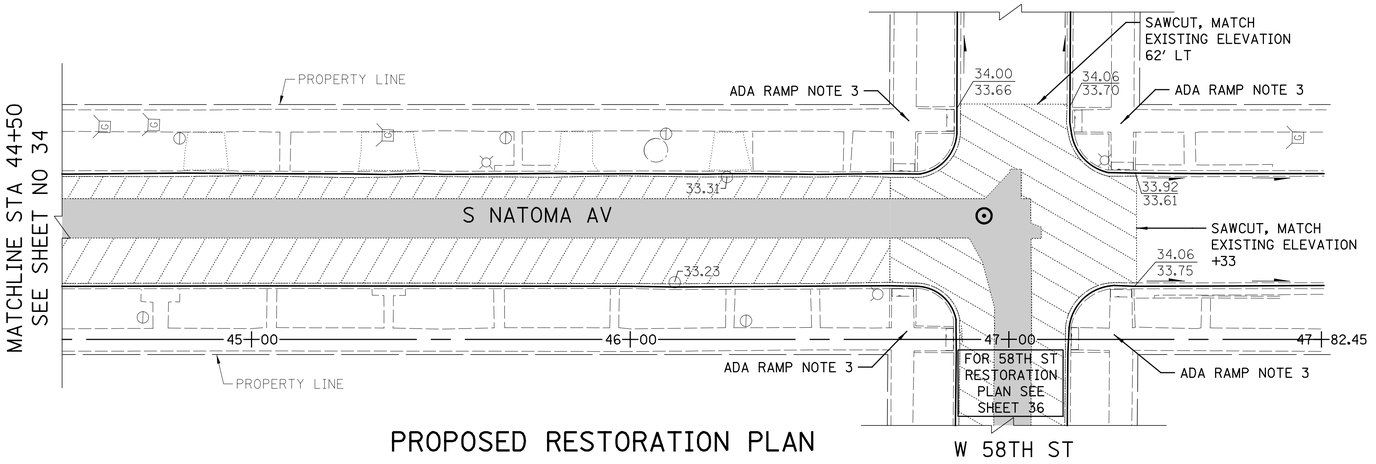

PROPOSED RESTORATION PLAN

HORIZONTAL SCALE 1 inch = 20 ft.

VERTICAL SCALE 1 inch = 5 ft.

$FILE$
$DATE$

NOTES:

1. THE EXTENT OF PAVEMENT RESTORATION MUST NOT EXCEED THE LIMITS SHOWN IN THIS DRAWING OR AS DIRECTED BY CDOT RULES AND REGULATIONS AND AS ORDERED BY THE COMMISSIONER

2. CONSTRUCTION OF NEW PAVEMENTS, CONCRETE SIDEWALKS, CURBS, GUTTERS, ALLEY RETURNS, AND DRIVEWAYS MUST CONFORM TO THE LATEST RULES AND REGULATIONS FOR CONSTRUCTION IN THE PUBLIC WAY OF THE CHICAGO DEPARTMENT OF TRANSPORTATION.

3. SEE CHICAGO DEPARTMENT OF TRANSPORTATION ADA CONSTRUCTION STANDARDS FOR ADA RAMP DESIGN.

4. ADJUST ROADWAY CENTERLINE ELEVATION TO ACHIEVE COMPLIANT CROSS SLOPES

5. ROADWAY GRADES AND CROSS SLOPES TO PROMOTE ADEQUATE DRAINAGE AND MITIGATE WATER PONDING IN THE STREET TO BE DETERMINED IN THE FIELD DURING CONSTRUCTION. ANY CHANGE IN PARTIAL OR FULL RESTORATION SHOULD BE VERIFIED WITH DESIGN SECTION BEFORE CONSTRUCTION.

6. SAWCUT 12" BEYOND EDGE OF CONCRETE ALLEY PAVING. PAVE INFILL WITH A MINIMUM 3¾" HOT MIX ASPHALT SURFACE COURSE IL-9.5, MIX "C", N30, LOW ESAL(SEE CDOT DETAIL A-2-8)

ADA RAMP NOTES

1. STANDARD DESIGN
2. SPECIAL DESIGN
3. EXISTING RAMP PASSES - DO NOT REMOVE
4. REMOVE AND REPLACE ADA DETECTABLE TILES

LEGEND

REMOVAL
- FULL DEPTH PAVEMENT REMOVAL
- SURFACE COURSE REMOVAL
- SIDEWALK/DRIVEWAY REMOVAL
- CURB AND GUTTER REMOVAL

PROPOSED
- FULL DEPTH PAVEMENT RECONSTRUCTION
- BITUMINOUS RESURFACING
- SIDEWALK/ DRIVEWAY/ ALLEY REPLACEMENT
- CURB AND GUTTER REPLACEMENT

CALL OUTS
- 13.41 / 13.12 — PROPOSED TOP OF CURB ELEV. / PROPOSED GUTTER ELEV.
- 13.66 — EXISTING ELEVATION
- 13.10 / 13.35 — EXISTING TOP OF CURB ELEV. / EXISTING GUTTER ELEV.
- STRUCTURE TO BE REMOVED
- A — ADJUST FRAME & LID
- PROPOSED CATCH BASIN
- PROPOSED MANHOLE
- DIRECTION OF FLOW
- SUMMIT

PERCENT COMPLETE	DATE
30	11-22-19
60 REV	04-09-20
75 REV	05-28-20
90 REV	08-05-20
100	08-21-20
BULLETIN	

CITY OF CHICAGO
DEPARTMENT OF WATER MANAGEMENT
BUREAU OF ENGINEERING SERVICES

PARTIAL RESTORATION PLAN
S NATOMA AV
W 57TH ST TO W 58TH ST

DRAWN:
DESIGNED:
CHECKED:
REVIEWED:

OUC EFP-102974

35 OF 69

PN 7500

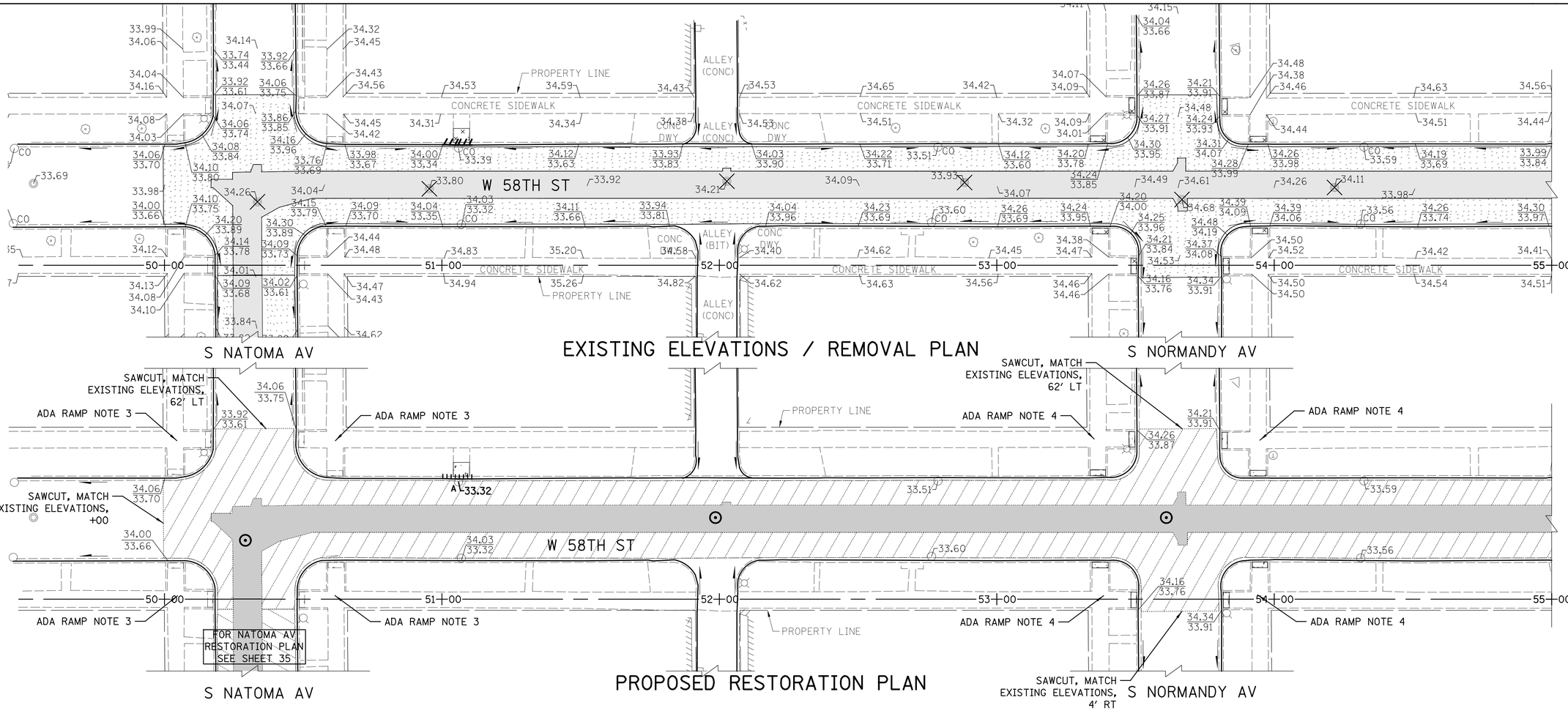

LEGEND

REMOVAL

- FULL DEPTH PAVEMENT REMOVAL
- SURFACE COURSE REMOVAL
- SIDEWALK/DRIVEWAY REMOVAL
- CURB AND GUTTER REMOVAL

PROPOSED

- FULL DEPTH PAVEMENT RECONSTRUCTION
- BITUMINOUS RESURFACING
- SIDEWALK/ DRIVEWAY/ ALLEY REPLACEMENT
- CURB AND GUTTER REPLACEMENT

CALL OUTS

- 13.41 / 13.12 — PROPOSED TOP OF CURB ELEV. / PROPOSED GUTTER ELEV.
- 13.66 — EXISTING ELEVATION
- 13.10 / 13.35 — EXISTING TOP OF CURB ELEV. / EXISTING GUTTER ELEV.
- STRUCTURE TO BE REMOVED
- A — ADJUST FRAME & LID
- PROPOSED CATCH BASIN
- PROPOSED MANHOLE
- DIRECTION OF FLOW
- SUMMIT

NOTES:

1. THE EXTENT OF PAVEMENT RESTORATION MUST NOT EXCEED THE LIMITS SHOWN IN THIS DRAWING OR AS DIRECTED BY CDOT RULES AND REGULATIONS AND AS ORDERED BY THE COMMISSIONER

2. CONSTRUCTION OF NEW PAVEMENTS, CONCRETE SIDEWALKS, CURBS, GUTTERS, ALLEY RETURNS, AND DRIVEWAYS MUST CONFORM TO THE LATEST RULES AND REGULATIONS FOR CONSTRUCTION IN THE PUBLIC WAY OF THE CHICAGO DEPARTMENT OF TRANSPORTATION.

3. SEE CHICAGO DEPARTMENT OF TRANSPORTATION ADA CONSTRUCTION STANDARDS FOR ADA RAMP DESIGN.

4. ADJUST ROADWAY CENTERLINE ELEVATION TO ACHIEVE COMPLIANT CROSS SLOPES

5. ROADWAY GRADES AND CROSS SLOPES TO PROMOTE ADEQUATE DRAINAGE AND MITIGATE WATER PONDING IN THE STREET TO BE DETERMINED IN THE FIELD DURING CONSTRUCTION. ANY CHANGE IN PARTIAL OR FULL RESTORATION SHOULD BE VERIFIED WITH DESIGN SECTION BEFORE CONSTRUCTION.

6. SAWCUT 12" BEYOND EDGE OF CONCRETE ALLEY PAVING. PAVE INFILL WITH A MINIMUM 3¾" HOT MIX ASPHALT SURFACE COURSE IL-9.5, MIX "C", N30, LOW ESAL(SEE CDOT DETAIL A-2-8)

ADA RAMP NOTES

1. STANDARD DESIGN
2. SPECIAL DESIGN
3. EXISTING RAMP PASSES - DO NOT REMOVE
4. REMOVE AND REPLACE ADA DETECTABLE TILES

HORIZONTAL SCALE 1 inch = 20 ft.

VERTICAL SCALE 1 inch = 5 ft.

PERCENT COMPLETE	DATE
30	11-22-19
60 REV	04-09-20
75 REV	05-28-20
90 REV	08-05-20
100	08-21-20
BULLETIN	

CITY OF CHICAGO
DEPARTMENT OF WATER MANAGEMENT
BUREAU OF ENGINEERING SERVICES

PARTIAL RESTORATION PLAN
W 58TH ST
S NATOMA AV TO
S NOTTINGHAM AV

DRAWN:
DESIGNED:
CHECKED:
REVIEWED:

OUC EFP-102974

36 OF 69

PN 7500

$FILE$
$DATE$

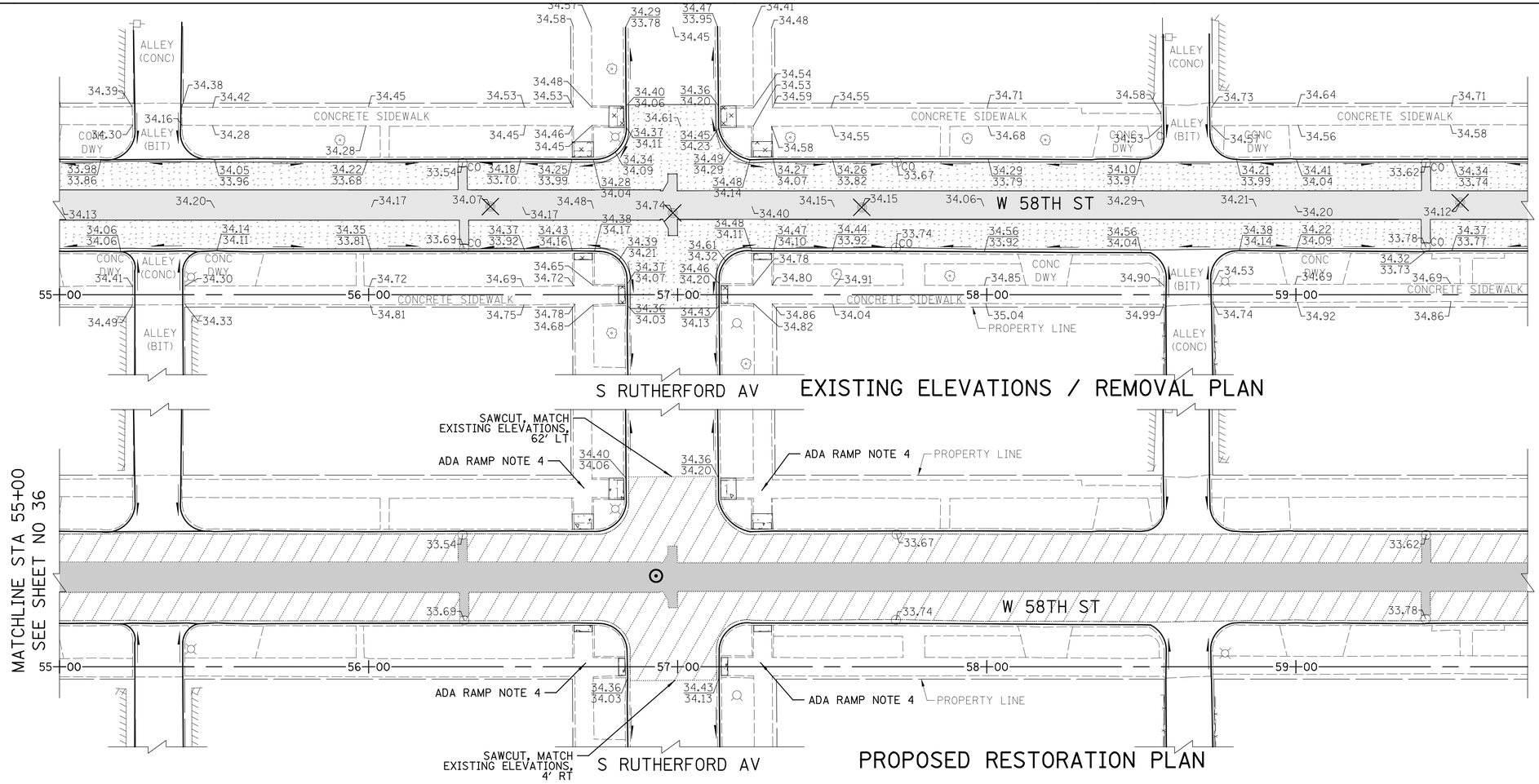



LEGEND

REMOVAL

- FULL DEPTH PAVEMENT REMOVAL
- SURFACE COURSE REMOVAL
- SIDEWALK/DRIVEWAY REMOVAL
- CURB AND GUTTER REMOVAL

PROPOSED

- FULL DEPTH PAVEMENT RECONSTRUCTION
- BITUMINOUS RESURFACING
- SIDEWALK/ DRIVEWAY/ ALLEY REPLACEMENT
- CURB AND GUTTER REPLACEMENT

CALL OUTS

- 13.41 / 13.12 — PROPOSED TOP OF CURB ELEV. / PROPOSED GUTTER ELEV.
- 13.66 — EXISTING ELEVATION
- 13.10 / 13.35 — EXISTING TOP OF CURB ELEV. / EXISTING GUTTER ELEV.
- STRUCTURE TO BE REMOVED
- A — ADJUST FRAME & LID
- PROPOSED CATCH BASIN
- PROPOSED MANHOLE
- DIRECTION OF FLOW
- SUMMIT

NOTES:

1. THE EXTENT OF PAVEMENT RESTORATION MUST NOT EXCEED THE LIMITS SHOWN IN THIS DRAWING OR AS DIRECTED BY CDOT RULES AND REGULATIONS AND AS ORDERED BY THE COMMISSIONER

2. CONSTRUCTION OF NEW PAVEMENTS, CONCRETE SIDEWALKS, CURBS, GUTTERS, ALLEY RETURNS, AND DRIVEWAYS MUST CONFORM TO THE LATEST RULES AND REGULATIONS FOR CONSTRUCTION IN THE PUBLIC WAY OF THE CHICAGO DEPARTMENT OF TRANSPORTATION.

3. SEE CHICAGO DEPARTMENT OF TRANSPORTATION ADA CONSTRUCTION STANDARDS FOR ADA RAMP DESIGN.

4. ADJUST ROADWAY CENTERLINE ELEVATION TO ACHIEVE COMPLIANT CROSS SLOPES

5. ROADWAY GRADES AND CROSS SLOPES TO PROMOTE ADEQUATE DRAINAGE AND MITIGATE WATER PONDING IN THE STREET TO BE DETERMINED IN THE FIELD DURING CONSTRUCTION. ANY CHANGE IN PARTIAL OR FULL RESTORATION SHOULD BE VERIFIED WITH DESIGN SECTION BEFORE CONSTRUCTION.

6. SAWCUT 12" BEYOND EDGE OF CONCRETE ALLEY PAVING. PAVE INFILL WITH A MINIMUM 3¾" HOT MIX ASPHALT SURFACE COURSE IL-9.5, MIX "C", N30, LOW ESAL(SEE CDOT DETAIL A-2-8)

ADA RAMP NOTES

1. STANDARD DESIGN
2. SPECIAL DESIGN
3. EXISTING RAMP PASSES - DO NOT REMOVE
4. REMOVE AND REPLACE ADA DETECTABLE TILES

HORIZONTAL SCALE 1inch = 20 ft.

VERTICAL SCALE 1inch = 5 ft.

$FILEL$
$DATE$

PERCENT COMPLETE	DATE
30	11-22-19
60 REV	04-09-20
75 REV	05-28-20
90 REV	08-05-20
100	08-21-20
BULLETIN	

CITY OF CHICAGO
DEPARTMENT OF WATER MANAGEMENT
BUREAU OF ENGINEERING SERVICES

PARTIAL RESTORATION PLAN
W 58TH ST
S NATOMA AV TO
S NOTTINGHAM AV

DRAWN:
DESIGNED:
CHECKED:
REVIEWED:

OUC EFP-102974

37 OF 69

PN 7500

EXISTING ELEVATIONS / REMOVAL PLAN

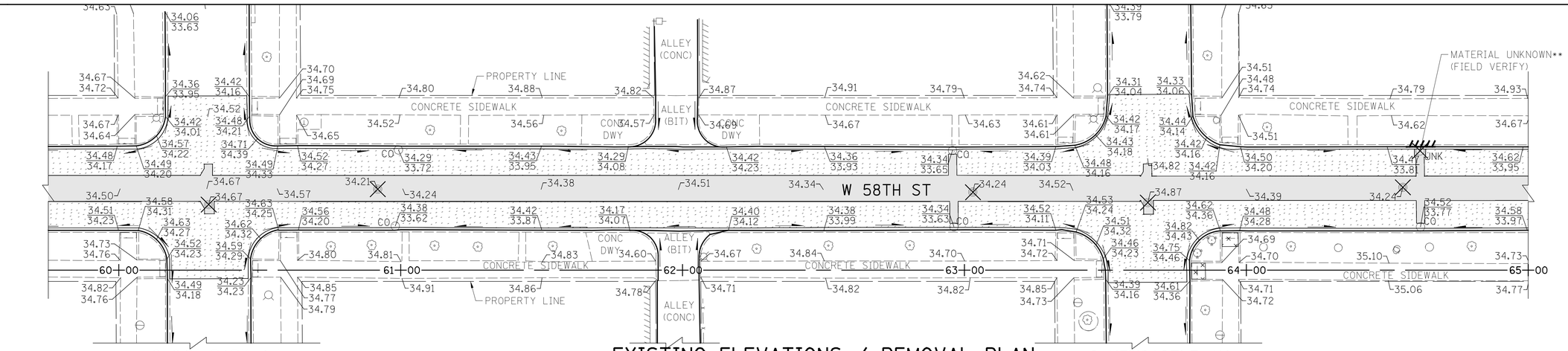

PROPOSED RESTORATION PLAN

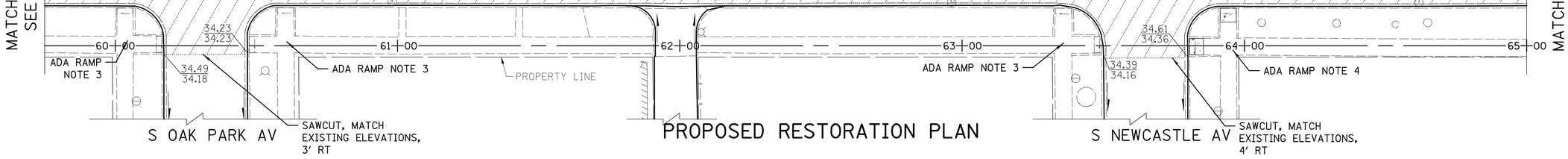

LEGEND

REMOVAL

- FULL DEPTH PAVEMENT REMOVAL
- SURFACE COURSE REMOVAL
- SIDEWALK/DRIVEWAY REMOVAL
- CURB AND GUTTER REMOVAL

PROPOSED

- FULL DEPTH PAVEMENT RECONSTRUCTION
- BITUMINOUS RESURFACING
- SIDEWALK/ DRIVEWAY/ ALLEY REPLACEMENT
- CURB AND GUTTER REPLACEMENT

CALL OUTS

- 13.41 / 13.12 — PROPOSED TOP OF CURB ELEV. / PROPOSED GUTTER ELEV.
- 13.66 — EXISTING ELEVATION
- 13.10 / 13.35 — EXISTING TOP OF CURB ELEV. / EXISTING GUTTER ELEV.
- STRUCTURE TO BE REMOVED
- A — ADJUST FRAME & LID
- PROPOSED CATCH BASIN
- PROPOSED MANHOLE
- DIRECTION OF FLOW
- SUMMIT

** NOTE: BRICK CATCH BASINS TO BE REPLACED IN KIND WITH CONCRETE

HORIZONTAL SCALE 1inch = 20 ft. (20 0 10 20 40 80)

VERTICAL SCALE 1inch = 5 ft. (5 0 2.5 5 10 20)

NOTES:

1. THE EXTENT OF PAVEMENT RESTORATION MUST NOT EXCEED THE LIMITS SHOWN IN THIS DRAWING OR AS DIRECTED BY CDOT RULES AND REGULATIONS AND AS ORDERED BY THE COMMISSIONER
2. CONSTRUCTION OF NEW PAVEMENTS, CONCRETE SIDEWALKS, CURBS, GUTTERS, ALLEY RETURNS, AND DRIVEWAYS MUST CONFORM TO THE LATEST RULES AND REGULATIONS FOR CONSTRUCTION IN THE PUBLIC WAY OF THE CHICAGO DEPARTMENT OF TRANSPORTATION.
3. SEE CHICAGO DEPARTMENT OF TRANSPORTATION ADA CONSTRUCTION STANDARDS FOR ADA RAMP DESIGN.
4. ADJUST ROADWAY CENTERLINE ELEVATION TO ACHIEVE COMPLIANT CROSS SLOPES
5. ROADWAY GRADES AND CROSS SLOPES TO PROMOTE ADEQUATE DRAINAGE AND MITIGATE WATER PONDING IN THE STREET TO BE DETERMINED IN THE FIELD DURING CONSTRUCTION. ANY CHANGE IN PARTIAL OR FULL RESTORATION SHOULD BE VERIFIED WITH DESIGN SECTION BEFORE CONSTRUCTION.
6. SAWCUT 12" BEYOND EDGE OF CONCRETE ALLEY PAVING. PAVE INFILL WITH A MINIMUM 3¾" HOT MIX ASPHALT SURFACE COURSE IL-9.5, MIX "C", N30, LOW ESAL(SEE CDOT DETAIL A-2-8)

ADA RAMP NOTES

1. STANDARD DESIGN
2. SPECIAL DESIGN
3. EXISTING RAMP PASSES - DO NOT REMOVE
4. REMOVE AND REPLACE ADA DETECTABLE TILES

PERCENT COMPLETE	DATE
30	11-22-19
60 REV	04-09-20
75 REV	05-28-20
90 REV	08-05-20
100	08-21-20
BULLETIN	

CITY OF CHICAGO
DEPARTMENT OF WATER MANAGEMENT
BUREAU OF ENGINEERING SERVICES

PARTIAL RESTORATION PLAN
W 58TH ST
S NATOMA AV TO
S NOTTINGHAM AV

DRAWN:
DESIGNED:
CHECKED:
REVIEWED:

OUC EFP-102974

38 OF 69

PN 7500

$FILE$
$DATE$

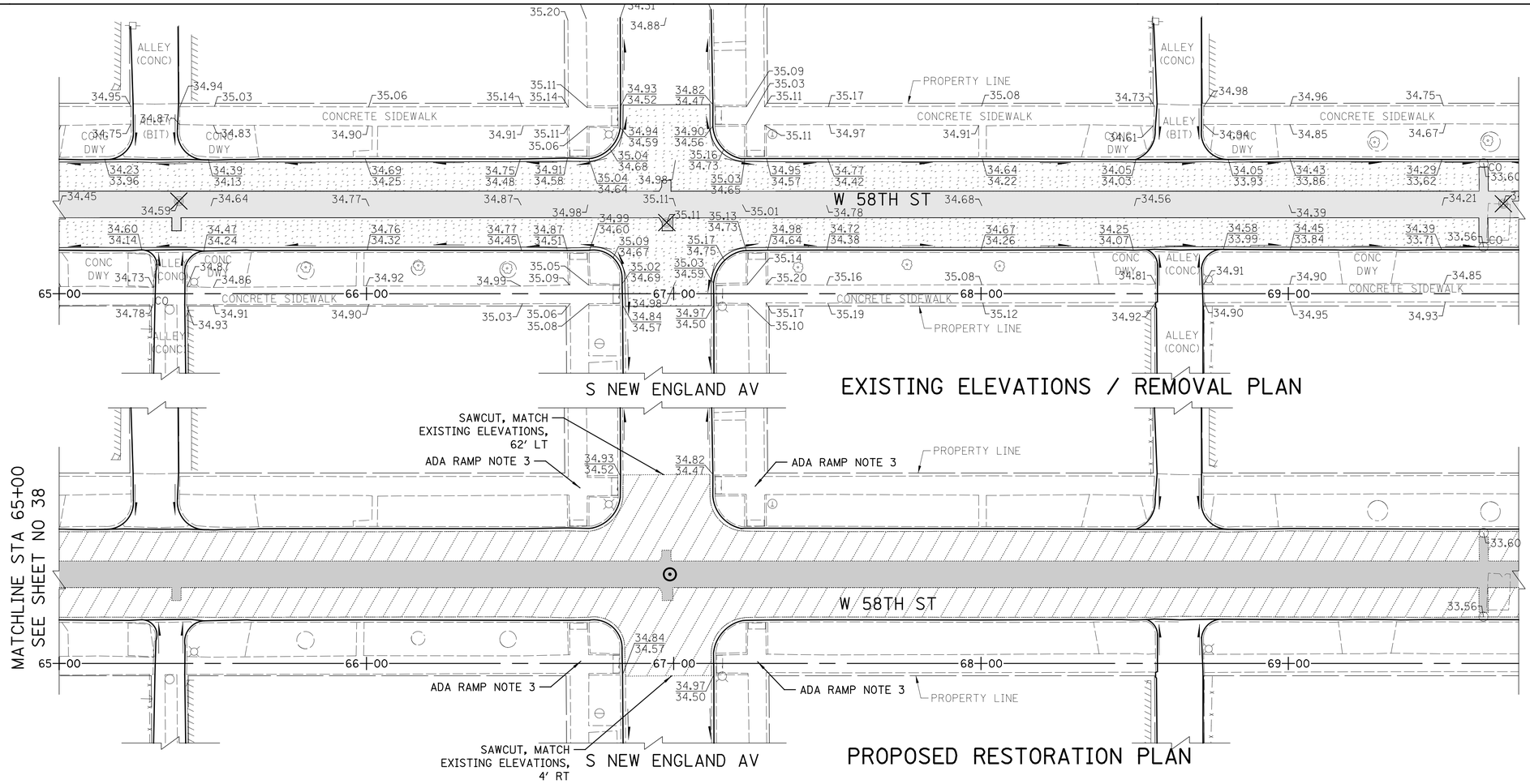

LEGEND

REMOVAL

- FULL DEPTH PAVEMENT REMOVAL
- SURFACE COURSE REMOVAL
- SIDEWALK/DRIVEWAY REMOVAL
- CURB AND GUTTER REMOVAL

PROPOSED

- FULL DEPTH PAVEMENT RECONSTRUCTION
- BITUMINOUS RESURFACING
- SIDEWALK/ DRIVEWAY/ ALLEY REPLACEMENT
- CURB AND GUTTER REPLACEMENT

CALL OUTS

- 13.41 / 13.12 — PROPOSED TOP OF CURB ELEV. / PROPOSED GUTTER ELEV.
- 13.66 — EXISTING ELEVATION
- 13.10 / 13.35 — EXISTING TOP OF CURB ELEV. / EXISTING GUTTER ELEV.
- STRUCTURE TO BE REMOVED
- A — ADJUST FRAME & LID
- PROPOSED CATCH BASIN
- PROPOSED MANHOLE
- DIRECTION OF FLOW
- SUMMIT

HORIZONTAL SCALE 1inch = 20 ft. (20 0 10 20 40 80)

VERTICAL SCALE 1inch = 5 ft. (5 0 2.5 5 10 20)

$FILEL$
$DATE$

NOTES:

1. THE EXTENT OF PAVEMENT RESTORATION MUST NOT EXCEED THE LIMITS SHOWN IN THIS DRAWING OR AS DIRECTED BY CDOT RULES AND REGULATIONS AND AS ORDERED BY THE COMMISSIONER
2. CONSTRUCTION OF NEW PAVEMENTS, CONCRETE SIDEWALKS, CURBS, GUTTERS, ALLEY RETURNS, AND DRIVEWAYS MUST CONFORM TO THE LATEST RULES AND REGULATIONS FOR CONSTRUCTION IN THE PUBLIC WAY OF THE CHICAGO DEPARTMENT OF TRANSPORTATION.
3. SEE CHICAGO DEPARTMENT OF TRANSPORTATION ADA CONSTRUCTION STANDARDS FOR ADA RAMP DESIGN.
4. ADJUST ROADWAY CENTERLINE ELEVATION TO ACHIEVE COMPLIANT CROSS SLOPES
5. ROADWAY GRADES AND CROSS SLOPES TO PROMOTE ADEQUATE DRAINAGE AND MITIGATE WATER PONDING IN THE STREET TO BE DETERMINED IN THE FIELD DURING CONSTRUCTION. ANY CHANGE IN PARTIAL OR FULL RESTORATION SHOULD BE VERIFIED WITH DESIGN SECTION BEFORE CONSTRUCTION.
6. SAWCUT 12" BEYOND EDGE OF CONCRETE ALLEY PAVING. PAVE INFILL WITH A MINIMUM 3¾" HOT MIX ASPHALT SURFACE COURSE IL-9.5, MIX "C", N30, LOW ESAL(SEE CDOT DETAIL A-2-8)

ADA RAMP NOTES

1. STANDARD DESIGN
2. SPECIAL DESIGN
3. EXISTING RAMP PASSES - DO NOT REMOVE
4. REMOVE AND REPLACE ADA DETECTABLE TILES

PERCENT COMPLETE	DATE
30	11-22-19
60 REV	04-09-20
75 REV	05-28-20
90 REV	08-05-20
100	08-21-20
BULLETIN	

CITY OF CHICAGO
DEPARTMENT OF WATER MANAGEMENT
BUREAU OF ENGINEERING SERVICES

PARTIAL RESTORATION PLAN
W 58TH ST
S NATOMA AV TO
S NOTTINGHAM AV

DRAWN:
DESIGNED:
CHECKED:
REVIEWED:

OUC EFP-102974
39 OF 69
PN 7500

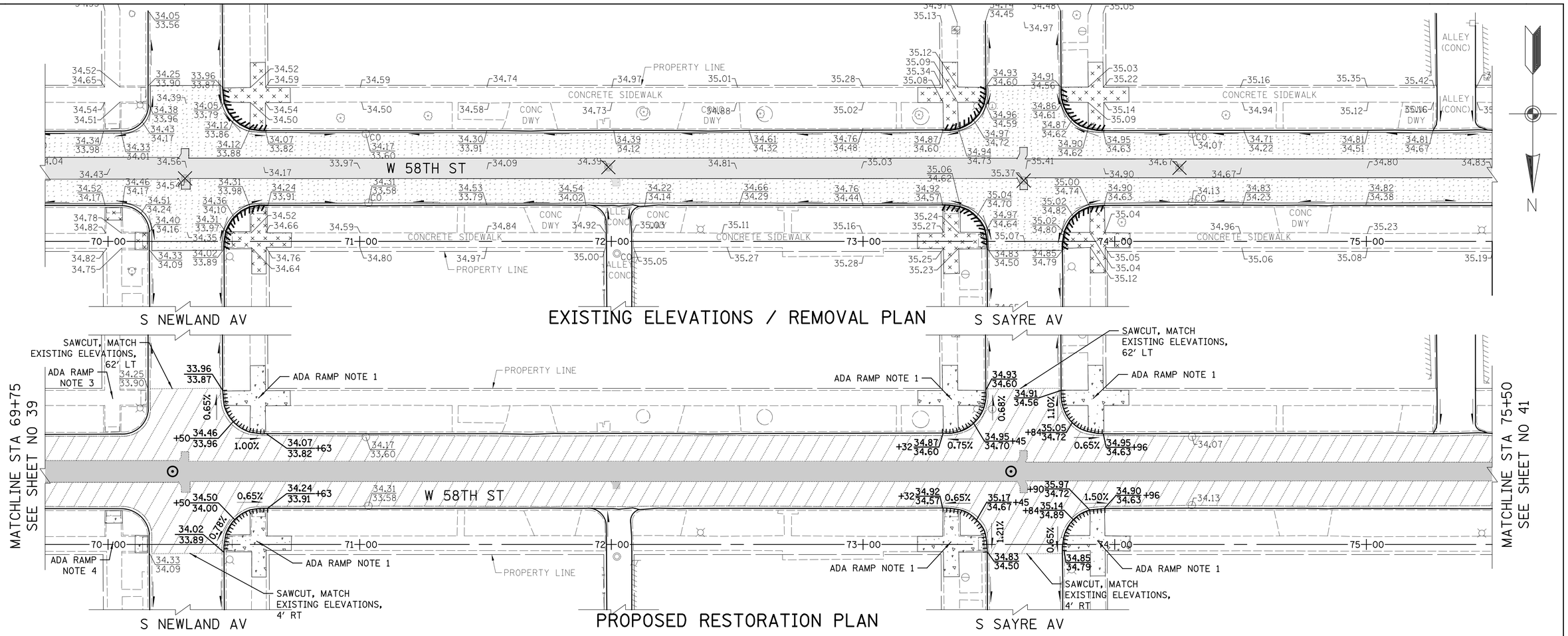

EXISTING ELEVATIONS / REMOVAL PLAN

PROPOSED RESTORATION PLAN

LEGEND

REMOVAL

- FULL DEPTH PAVEMENT REMOVAL
- SURFACE COURSE REMOVAL
- SIDEWALK/DRIVEWAY REMOVAL
- CURB AND GUTTER REMOVAL

PROPOSED

- FULL DEPTH PAVEMENT RECONSTRUCTION
- BITUMINOUS RESURFACING
- SIDEWALK/ DRIVEWAY/ ALLEY REPLACEMENT
- CURB AND GUTTER REPLACEMENT

CALL OUTS

- 13.41 / 13.12 — PROPOSED TOP OF CURB ELEV. / PROPOSED GUTTER ELEV.
- 13.66 — EXISTING ELEVATION
- 13.10 / 13.35 — EXISTING TOP OF CURB ELEV. / EXISTING GUTTER ELEV.
- STRUCTURE TO BE REMOVED
- A — ADJUST FRAME & LID
- PROPOSED CATCH BASIN
- PROPOSED MANHOLE
- DIRECTION OF FLOW
- SUMMIT

NOTES:

1. THE EXTENT OF PAVEMENT RESTORATION MUST NOT EXCEED THE LIMITS SHOWN IN THIS DRAWING OR AS DIRECTED BY CDOT RULES AND REGULATIONS AND AS ORDERED BY THE COMMISSIONER
2. CONSTRUCTION OF NEW PAVEMENTS, CONCRETE SIDEWALKS, CURBS, GUTTERS, ALLEY RETURNS, AND DRIVEWAYS MUST CONFORM TO THE LATEST RULES AND REGULATIONS FOR CONSTRUCTION IN THE PUBLIC WAY OF THE CHICAGO DEPARTMENT OF TRANSPORTATION.
3. SEE CHICAGO DEPARTMENT OF TRANSPORTATION ADA CONSTRUCTION STANDARDS FOR ADA RAMP DESIGN.
4. ADJUST ROADWAY CENTERLINE ELEVATION TO ACHIEVE COMPLIANT CROSS SLOPES
5. ROADWAY GRADES AND CROSS SLOPES TO PROMOTE ADEQUATE DRAINAGE AND MITIGATE WATER PONDING IN THE STREET TO BE DETERMINED IN THE FIELD DURING CONSTRUCTION. ANY CHANGE IN PARTIAL OR FULL RESTORATION SHOULD BE VERIFIED WITH DESIGN SECTION BEFORE CONSTRUCTION.
6. SAWCUT 12" BEYOND EDGE OF CONCRETE ALLEY PAVING. PAVE INFILL WITH A MINIMUM 3¾" HOT MIX ASPHALT SURFACE COURSE IL-9.5, MIX "C", N30, LOW ESAL(SEE CDOT DETAIL A-2-8)

ADA RAMP NOTES

1. STANDARD DESIGN
2. SPECIAL DESIGN
3. EXISTING RAMP PASSES - DO NOT REMOVE
4. REMOVE AND REPLACE ADA DETECTABLE TILES

HORIZONTAL SCALE 1inch = 20 ft.

VERTICAL SCALE 1inch = 5 ft.

$FILEL$
$DATE$

PERCENT COMPLETE	DATE
30	11-22-19
60 REV	04-09-20
75 REV	05-28-20
90 REV	08-05-20
100	08-21-20
BULLETIN	

CITY OF CHICAGO
DEPARTMENT OF WATER MANAGEMENT
BUREAU OF ENGINEERING SERVICES

PARTIAL RESTORATION PLAN
W 58TH ST
S NATOMA AV TO
S NOTTINGHAM AV

DRAWN:
DESIGNED:
CHECKED:
REVIEWED:

OUC EFP-102974

40 OF 69

PN 7500

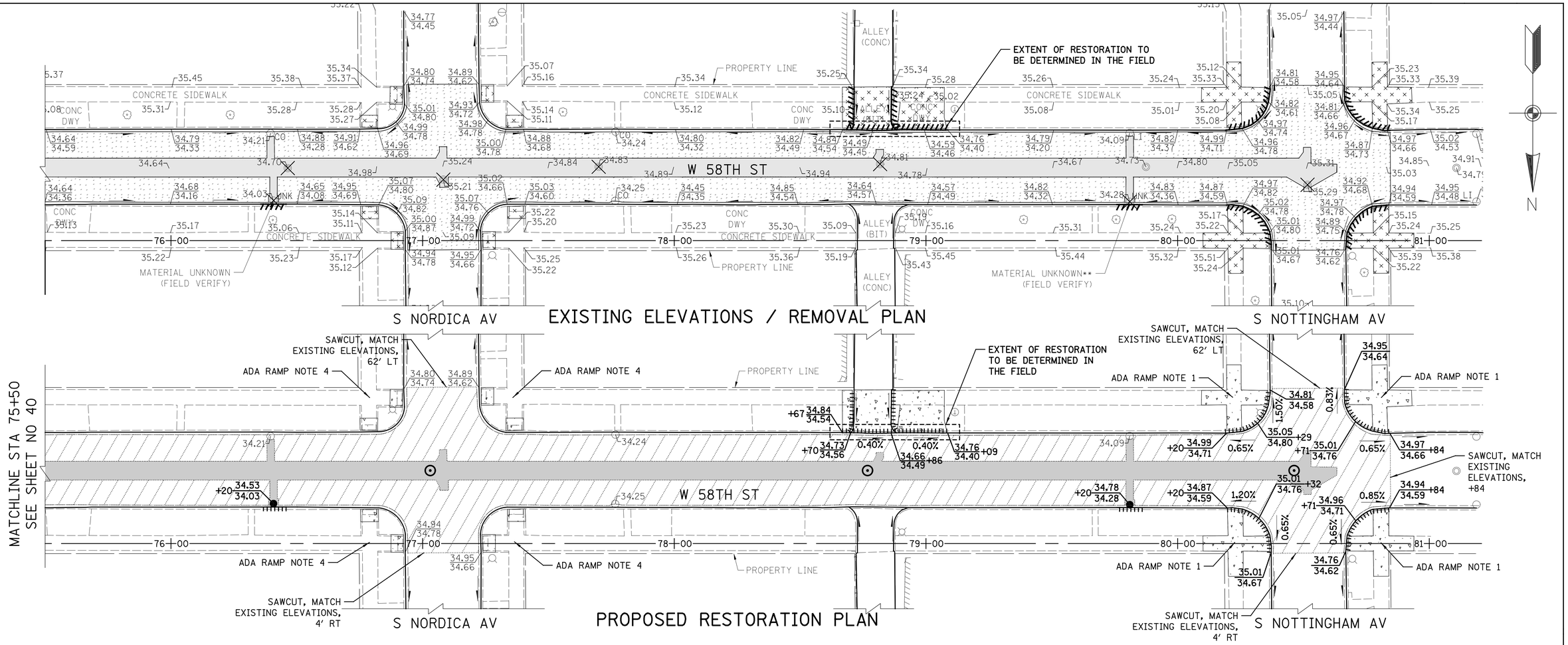

** NOTE: BRICK CATCH BASINS TO BE REPLACED IN KIND WITH CONCRETE

HORIZONTAL SCALE 1inch = 20 ft.

VERTICAL SCALE 1inch = 5 ft.

$FILE$
$DATE$

NOTES:

1. THE EXTENT OF PAVEMENT RESTORATION MUST NOT EXCEED THE LIMITS SHOWN IN THIS DRAWING OR AS DIRECTED BY CDOT RULES AND REGULATIONS AND AS ORDERED BY THE COMMISSIONER

2. CONSTRUCTION OF NEW PAVEMENTS, CONCRETE SIDEWALKS, CURBS, GUTTERS, ALLEY RETURNS, AND DRIVEWAYS MUST CONFORM TO THE LATEST RULES AND REGULATIONS FOR CONSTRUCTION IN THE PUBLIC WAY OF THE CHICAGO DEPARTMENT OF TRANSPORTATION.

3. SEE CHICAGO DEPARTMENT OF TRANSPORTATION ADA CONSTRUCTION STANDARDS FOR ADA RAMP DESIGN.

4. ADJUST ROADWAY CENTERLINE ELEVATION TO ACHIEVE COMPLIANT CROSS SLOPES

5. ROADWAY GRADES AND CROSS SLOPES TO PROMOTE ADEQUATE DRAINAGE AND MITIGATE WATER PONDING IN THE STREET TO BE DETERMINED IN THE FIELD DURING CONSTRUCTION. ANY CHANGE IN PARTIAL OR FULL RESTORATION SHOULD BE VERIFIED WITH DESIGN SECTION BEFORE CONSTRUCTION.

6. SAWCUT 12" BEYOND EDGE OF CONCRETE ALLEY PAVING. PAVE INFILL WITH A MINIMUM 3¾" HOT MIX ASPHALT SURFACE COURSE IL-9.5, MIX "C", N30, LOW ESAL(SEE CDOT DETAIL A-2-8)

ADA RAMP NOTES

1. STANDARD DESIGN
2. SPECIAL DESIGN
3. EXISTING RAMP PASSES - DO NOT REMOVE
4. REMOVE AND REPLACE ADA DETECTABLE TILES

LEGEND

REMOVAL

- FULL DEPTH PAVEMENT REMOVAL
- SURFACE COURSE REMOVAL
- SIDEWALK/DRIVEWAY REMOVAL
- CURB AND GUTTER REMOVAL

PROPOSED

- FULL DEPTH PAVEMENT RECONSTRUCTION
- BITUMINOUS RESURFACING
- SIDEWALK/ DRIVEWAY/ ALLEY REPLACEMENT
- CURB AND GUTTER REPLACEMENT

CALL OUTS

- 13.41 / 13.12 — PROPOSED TOP OF CURB ELEV. / PROPOSED GUTTER ELEV.
- 13.66 — EXISTING ELEVATION
- 13.10 / 13.35 — EXISTING TOP OF CURB ELEV. / EXISTING GUTTER ELEV.
- STRUCTURE TO BE REMOVED
- A — ADJUST FRAME & LID
- PROPOSED CATCH BASIN
- PROPOSED MANHOLE
- DIRECTION OF FLOW
- SUMMIT

PERCENT COMPLETE	DATE
30	11-22-19
60 REV	04-09-20
75 REV	05-28-20
90 REV	08-05-20
100	08-21-20
BULLETIN	

CITY OF CHICAGO
DEPARTMENT OF WATER MANAGEMENT
BUREAU OF ENGINEERING SERVICES

PARTIAL RESTORATION PLAN
W 58TH ST
S NATOMA AV TO
S NOTTINGHAM AV

DRAWN:	
DESIGNED:	
CHECKED:	
REVIEWED:	
OUC EFP-102974	
41 OF 69	
PN 7500	

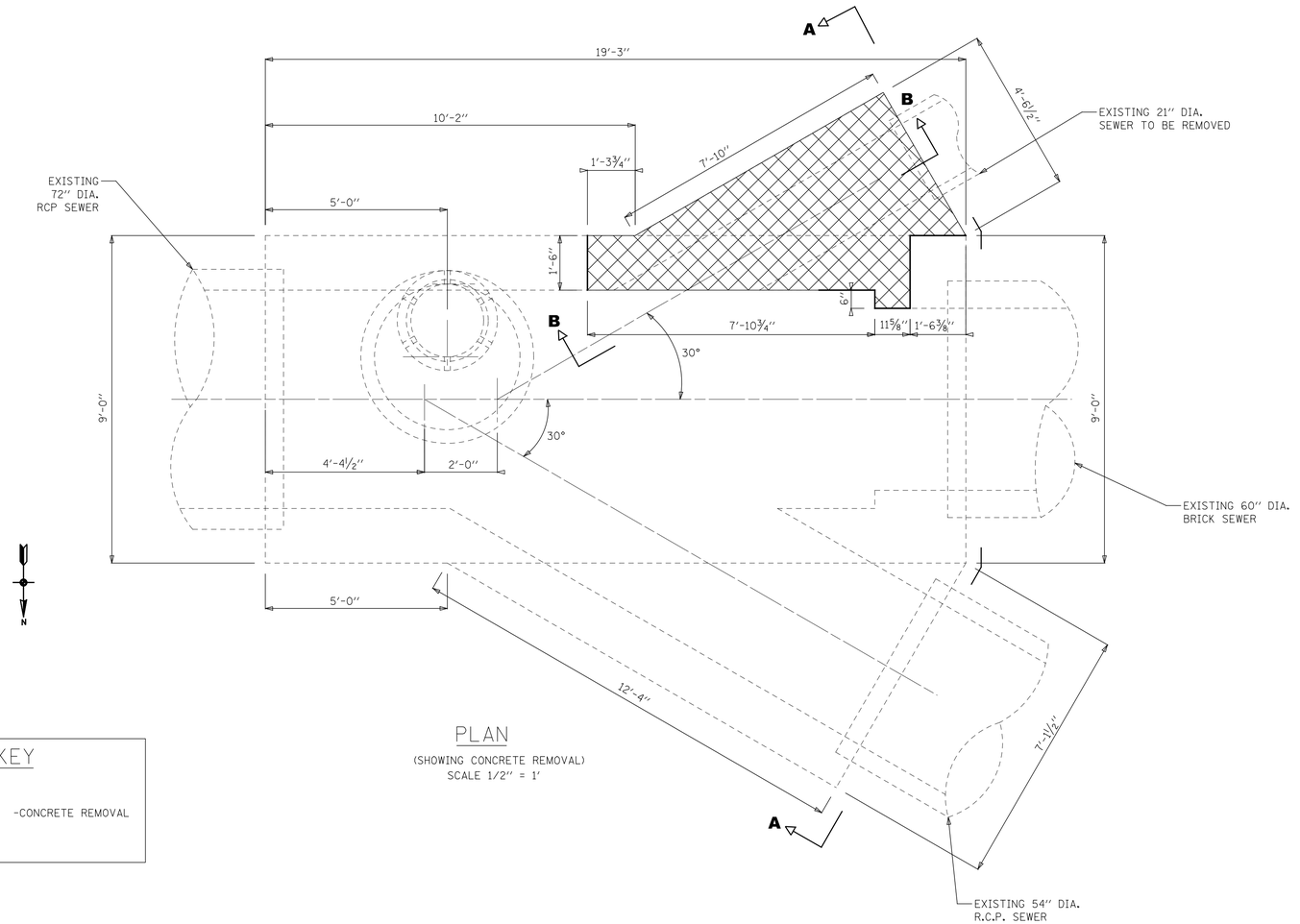

PLAN

(SHOWING CONCRETE REMOVAL)
SCALE 1/2" = 1'

KEY

-CONCRETE REMOVAL

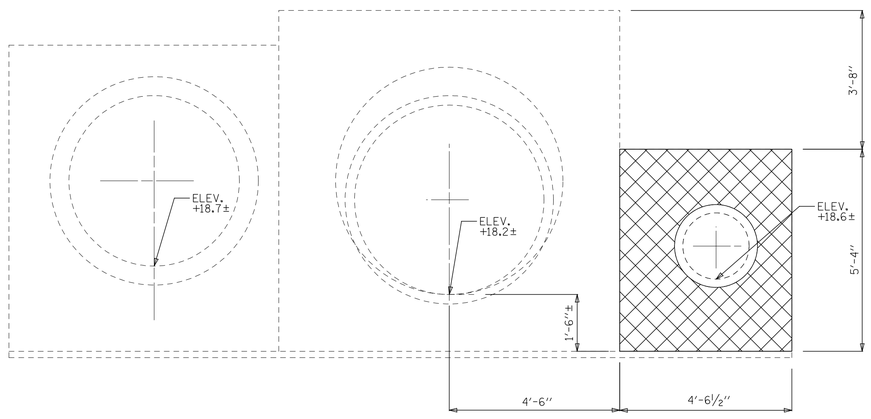

SECTION A-A

(SHOWING CONCRETE REMOVAL)
SCALE 1/2" = 1'

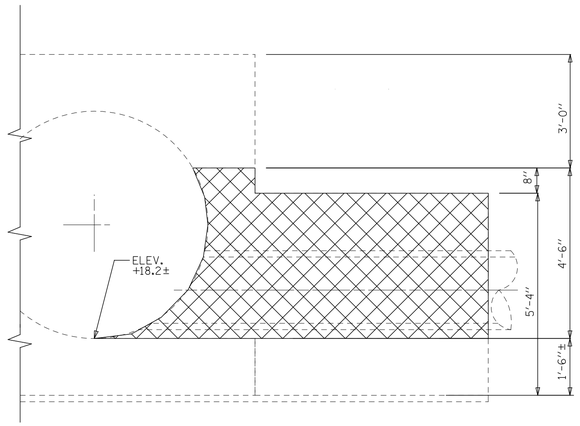

SECTION B-B

(SHOWING CONCRETE REMOVAL)
SCALE 1/2" = 1'

STRUCTURAL GENERAL NOTES

PLACING OF CONCRETE:

CONCRETE MUST BE PLACED IN ACCORDANCE WITH THE STANDARD SPECIFICATIONS.

CONCRETE PROTECTION FOR REINFORCEMENT:

UNLESS OTHERWISE INDICATED, MAIN REINFORCING STEEL MUST BE PLACED AND MAINTAINED AT THE FOLLOWING MINIMUM CLEAR DISTANCES FROM THE SURFACE OF THE CONCRETE.

CONCRETE EXPOSURE		
MEMBER	EARTH	SEWAGE
BOTTOM OF SLAB	3"	2½"
TOP OF SLAB	2"	2½"
WALLS	2"	2½"

CONSTRUCTION JOINTS:

JOINTS NOT INDICATED ON THE PLANS MUST BE SO MADE AND LOCATED AS NOT TO IMPAIR THE STRENGTH OF THE STRUCTURE AND MUST BE APPROVED BY THE COMMISSIONER.
JOINTS MUST BE CONSTRUCTED IN ACCORDANCE WITH THE METHOD OUTLINED IN THE STANDARD SPECIFICATIONS.

REINFORCING STEEL

ALL REINFORCING STEEL MUST BE EPOXY COATED, ACCURATELY PLACED AND SUPPORTED BY BAR SUPPORTS, SPACERS OR HIGH CHAIRS MUST CONFORM TO "RECOMMENDED PRACTICE FOR PLACING REINFORCING BARS", CRSI LATEST EDITION.
UNLESS OTHERWISE INDICATED, REINFORCING STEEL MUST HAVE LAP SPLICE LENGTHS AS FOLLOWS:

BAR SIZE	TOP BARS ••		OTHER	
	SPACING < 6"	SPACING ≥ 6"	SPACING < 6"	SPACING ≥ 6"
#5	3'-4"	2'-9"	2'-5"	2'-0"
#6	4'-0"	3'-3"	2'-11"	2'-4"
#7	5'-2"	4'-1"	3'-8"	3'-0"
#8	6'-8"	5'-4"	4'-9"	3'-10"
#9	8'-6"	6'-10"	6'-1"	4'-10"
#10	10'-5"	8'-7"	7'-10"	6'-2"

•• MORE THAN 12 INCHES OF CONCRETE UNDER HORIZONTAL BAR

UNLESS OTHERWISE NOTED, HOOKS AND BENDS ON BARS MUST CONFORM TO RECOMMENDED DETAILS AS GIVEN IN THE "MANUAL OF STANDARD PRACTICE", CRSI LATEST EDITION.
THE FOLLOWING ABBREVIATIONS ARE USED TO INDICATE THE LOCATION OF REINFORCING STEEL

E.F. DENOTES EACH FACE
T. DENOTES TOP
BOT. DENOTES BOTTOM
E.W. DENOTES EACH WAY
C.J. DENOTES CONSTRUCTION JOINT
N.F. DENOTES NEAR FACE
F.F. DENOTES FAR FACE
O.C. DENOTES ON CENTER

COMPRESSIVE STRENGTH OF CONCRETE AT 28 DAYS fc' = 4,000 PSI
YIELD STRENGTH OF REINFORCING STEEL fy = 60,000 PSI.

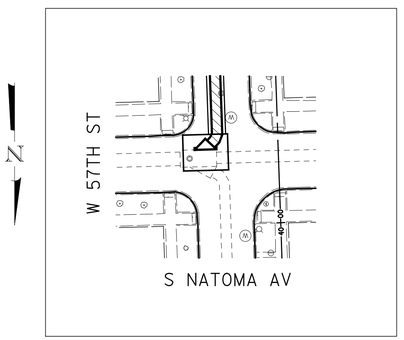

LOCATION MAP

SCALE 1" = 20'
FOR EXISTING UTILITIES AND TOPOGRAPHY SEE SHEET NO. xx

STATE OF ILLINOIS
CHRISTOPHER J. BUNDE
PE 081-005134
LICENSED STRUCTURAL ENGINEER

Christopher J. Bunde

Exp. 11-30-2020

PERCENT COMPLETE	DATE
30	11-22-19
60 REV	04-09-20
75 REV	05-28-20
90 REV	08-05-20
100	08-21-20
BULLETIN	

CITY OF CHICAGO
DEPARTMENT OF WATER MANAGEMENT
BUREAU OF ENGINEERING SERVICES

CONNECTION AT
S NATOMA AV AND
W 57TH ST

DRAWN:
DESIGNED:
CHECKED:
REVIEWED:

OUC EFP-102974

42 OF 69

PN 7500

$FILE$
$DATE$

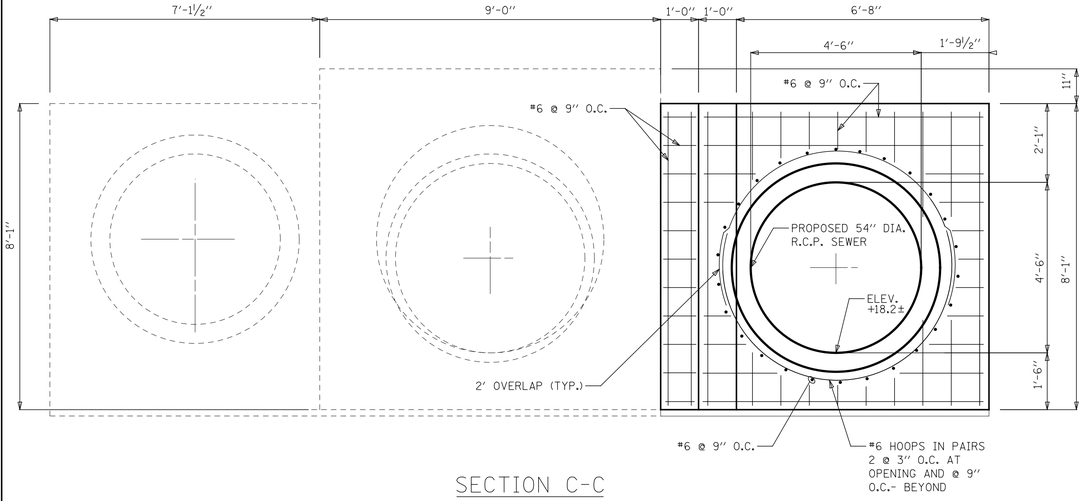

SECTION C-C

SCALE 1/2" = 1'

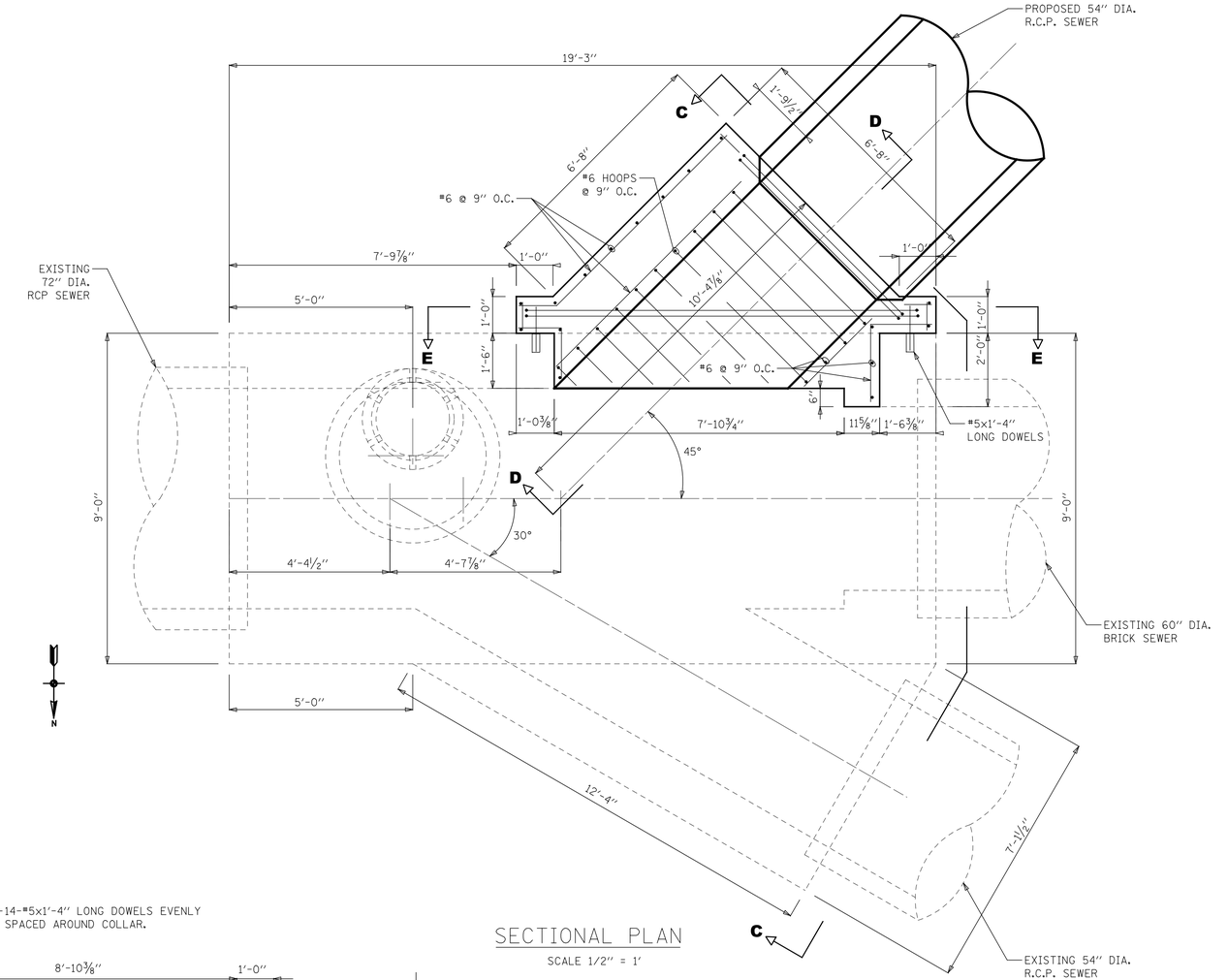

SECTIONAL PLAN

SCALE 1/2" = 1'

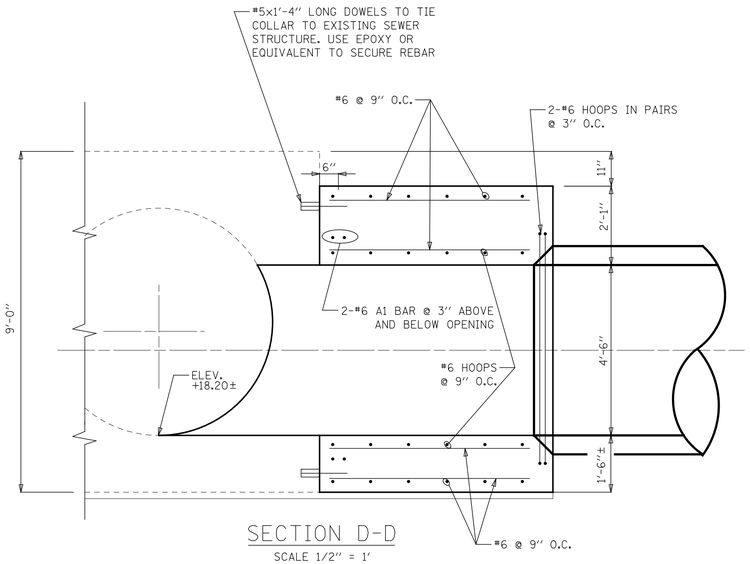

SECTION D-D

SCALE 1/2" = 1'

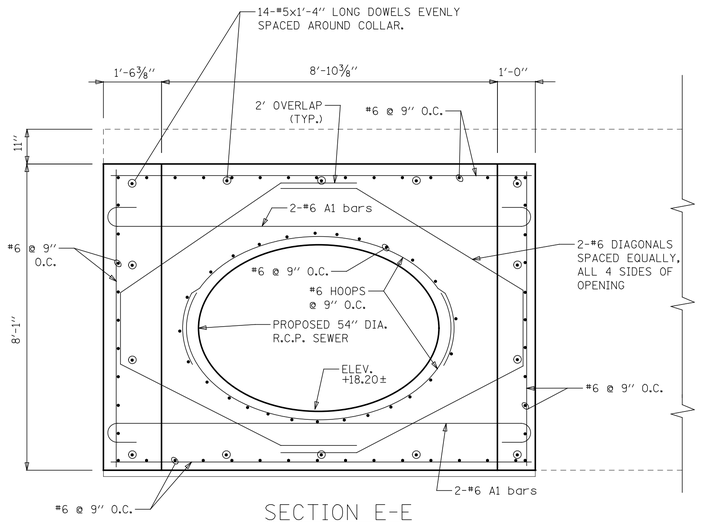

SECTION E-E

SCALE 1/2" = 1'

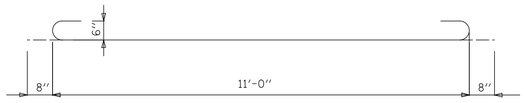

#6 A1 BAR

STATE OF ILLINOIS
CHRISTOPHER J. BURKE
081-005134
PROFESSIONAL STRUCTURAL ENGINEER

Christopher J. Burke

Exp. 11-30-2020

PERCENT COMPLETE	DATE
30	11-22-19
60 REV	04-09-20
75 REV	05-28-20
90 REV	08-05-20
100	08-21-20
BULLETIN	

CITY OF CHICAGO
DEPARTMENT OF WATER MANAGEMENT
BUREAU OF ENGINEERING SERVICES

CONNECTION AT
S NATOMA AV AND
W 57TH ST

DRAWN:
DESIGNED:
CHECKED:
REVIEWED:

OUC EFP-102974

43 OF 69

PN 7500

$FILE$
$DATE$

CONRETE COLLAR NOTES:

1. ALL ITEMS AND MATERIALS SHALL CONFORM TO THE LATEST IDOT SSRBC SPECIFICATIONS, UNLESS OTHERWISE NOTED IN SUPPLEMENTAL SPECIFICATIONS FOR THE SPECIFIC PROJECT BEING CONSTRUCTED.

2. ALL CONCRETE SHALL CONFORM TO IDOT SSRBC ARTICLE 1020.04, CLASS SI, WITH A COMPRESSIVE STRENGTH OF 3500 PSI.

3. ALL EPOXY COATED REINFORCEMENT BARS SHALL CONFORM TO IDOT SSRBC SECTION 508, AND ARTICLE 1006.10.

4. UNLESS OTHERWISE SHOWN, THE COVER FOR REINFORCING STEEL SHALL BE AS FOLLOWS: A.) CONCRETE CAST AGAINST PERMANENTLY EXPOSE EARTH: 3" B.) ALL OTHER REINFORCING BARS: 2"

5. CONCRETE COLLARS SHALL BE USED AT ALL EXISTING/PROPOSED PIPE CONNECTIONS. TRIM EXISTING PIPE END TO PROVIDE FLUSH BUTT JOINT, INSTALL REBAR, AND PLACE CONCRETE COLLAR.

6. THE CONTRACTOR SHALL PROVIDE ALL MEASURES AND PRECAUTIONS NECESSARY TO PREVENT DAMAGE TO THE EXISTING SEWER DURING CONSTRUCTION. CONTRACTOR SHALL ADEQUATELY BRACE OR SHORE EXISTING SEWER IF REQUIRED TO MAINTAIN INTEGRITY OF SEWER DURING CONSTRUCTION. SUBMIT DESIGN AND DETAILS, SEALED AND SIGNED BY AN ILLINOIS LICENSED STRUCTURAL ENGINEER, SHOWING TEMPORARY BRACING FOR THE EXISTING SEWER DURING CONSTRUCTION FOR REVIEW PRIOR TO CONSTRUCTION. ANY DAMAGE TO EXISTING STRUCTURE IS RESPONSIBILITY OF THE CONTRACTOR.

7. CONTRACTOR SHALL DIVERT ALL FLOW FROM THE EXISTING SEWER PRIOR TO CONSTRUCTION SO THAT THE WORK CAN BE PERFORMED IN THE DRY CONDITION. SEWER MUST BE MAINTAINED IN SERVICE AT ALL TIMES. SUBMIT MEANS OF FLOW DIVERSION FOR REVIEW PRIOR BREAKING INTO EXISTING BRICK SEWER. ALL EXCAVATION SHALL BE KEPT DEWATERED DURING CONSTRUCTION OPERATIONS UNTIL BACKFILL IN PLACE. PROVISIONS SHALL BE MADE TO PREVENT THE BOTTOM OF ALL EXCAVATIONS FROM FREEZING OR FLOODING AT ALL TIMES. PLAN DIMENSIONS AND DETAILS RELATIVE TO EXISTING STRUCTURE SHALL BE SUBJECT TO NOMINAL CONSTRUCTION VARIATIONS. IT SHALL BE CONTRACTOR'S RESPONSIBILITY TO VERIFY SUCH DIMENSIONS AND DETAILS IN THE FIELD AND MAKE NECESSARY APPROVED ADJUSTMENTS PRIOR TO CONSTRUCTION OR ORDERING MATERIALS. SUCH VARIATIONS SHALL NOT BE CAUSE FOR ADDITIONAL COMPENSATION FOR A CHANGE IN THE SCOPE OF THE WORK, HOWEVER, CONTRACTOR WILL BE PAID FOR THE QUANTITY ACTUALLY FURNISHED AT THE UNIT PRICE OF THE WORK.

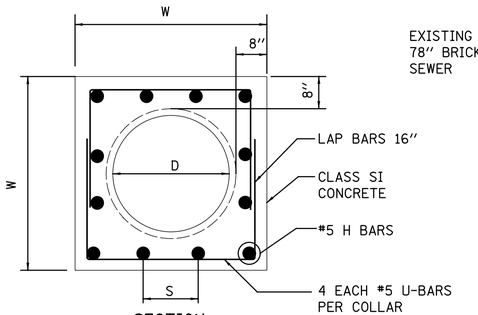

SECTION

(SAME INSIDE DIAMETERS)
N.T.S.

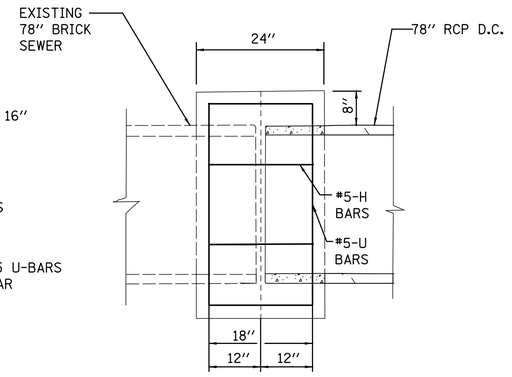

PLAN

(SAME INSIDE DIAMETERS)
N.T.S.

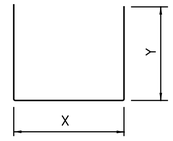

#5 U BAR

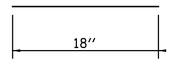

#5 H BAR

				U BAR			H BAR				
D	T	W				TOTAL			TOTAL	CLASS SI	
PIPE DIA.	PIPE THICKNESS	WIDTH	X	Y	QTY	LENGTH	S	QTY	LENGTH	CONCRETE	#5 EPOXY REBAR
(IN.)	(IN.)	(IN.)	(IN.)	(IN.)	(EACH)	(FT.)	(IN.)	(EACH)	(FT.)	(CU. YD.)	(LBS.)
78	9.00(+/-)	112.0	106.00	61.00	4	76.0	11 5/8	36.0	54.0	2.69	135.6

EXISTING 78" BRICK SEWER PIPE TO 78" RCP DC PIPE

REINFORCED CONCRETE COLLAR DETAIL

SCALE: N.T.S.

STATE OF ILLINOIS
CHRISTOPHER J. BURKE
PE 081-005134
LICENSED STRUCTURAL ENGINEER

Christopher J. Burke

Exp. 11-30-2020

PERCENT COMPLETE	DATE
30	11-22-19
60 REV	04-09-20
75 REV	05-28-20
90 REV	08-05-20
100	08-21-20
BULLETIN	

CITY OF CHICAGO
DEPARTMENT OF WATER MANAGEMENT
BUREAU OF ENGINEERING SERVICES

78" CONCRETE COLLAR
58TH & S. MOBILE

DRAWN:
DESIGNED:
CHECKED:
REVIEWED:

OUC EFP-102974

44 OF 69

PN 7500

$FILE$
$DATE$

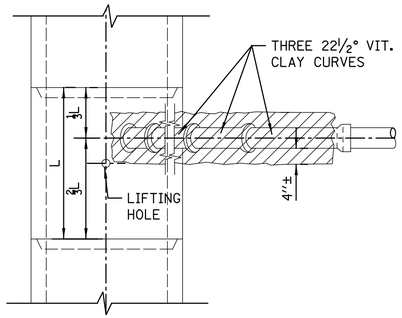

PLAN

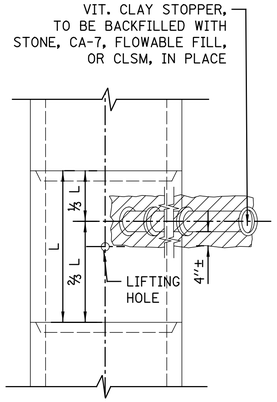

PLAN

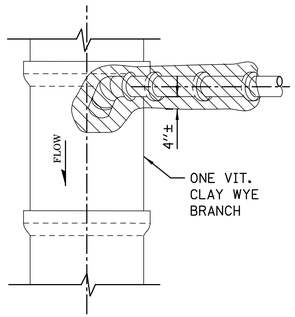

PLAN

NOTE:
PLUG TO BE COATED WITH MORTAR AND DRIVEN INTO PLACE WITH A WOODEN MALLET AND THEN SEALED WITH MORTAR.

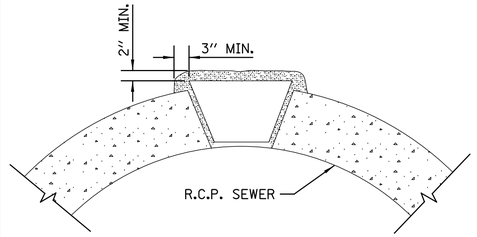

LIFTING HOLE PLUG DETAIL FOR CONCRETE PIPE

NOTE:
1. ALL PLUG MATERIALS MUST COMPLY WITH 1042.16 OF THE IDOT SSRBC.

2. LIFT HOLES ON COMBINED SEWERS ARE PROHIBITED WHEN THE WATER TABLE IS WITHIN 2 FEET OF THE PIPE INVERT.

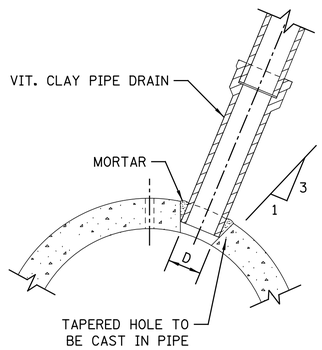

SIZE OF DRAIN	''D''
6''	6⅞''
8''	9⅛''
10''	11⅛''
12''	13½''
15''	17''
18''	20¼''
21''	23⅞''

DETAIL OF TAPERED HOLE

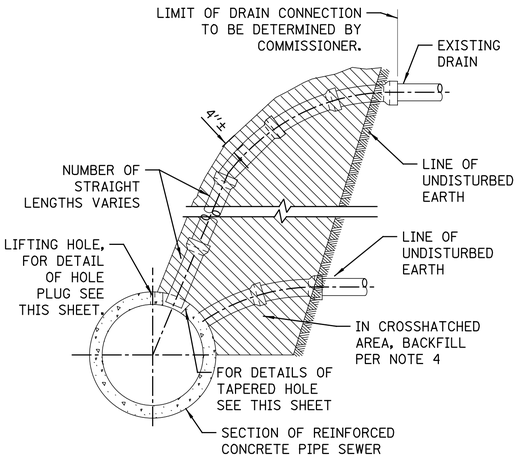

ELEVATION

TYPICAL DRAIN CONNECTIONS FOR EXISTING DRAINS

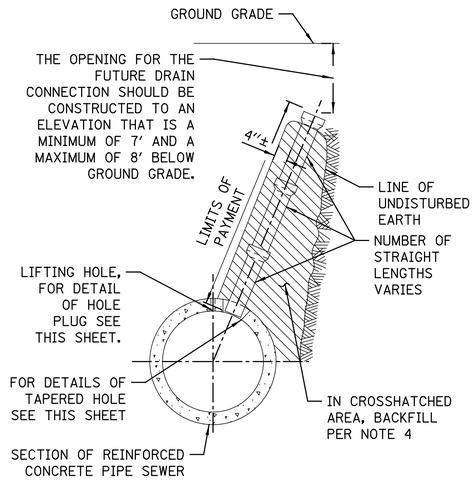

ELEVATION

TYPICAL DRAIN STACKS FOR FUTURE USE

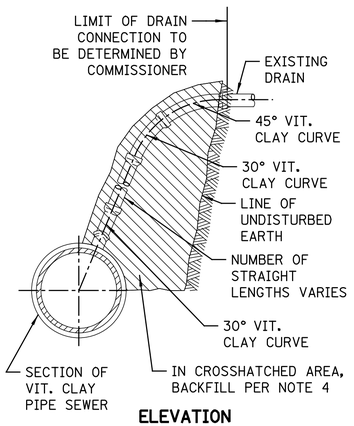

ELEVATION

TYPICAL DRAIN CONNECTIONS FOR EXISTING DRAINS

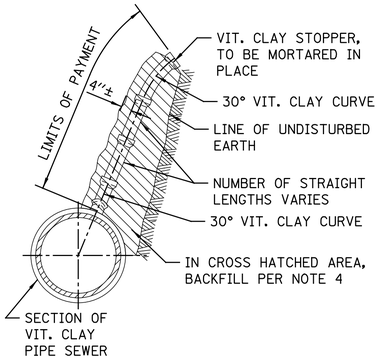

ELEVATION

TYPICAL DRAIN STACKS FOR FUTURE USE

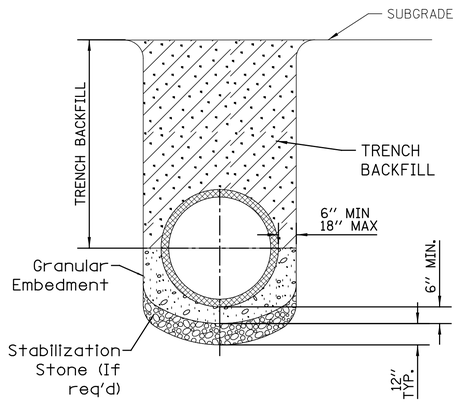

NOTE:
1. FOR TRENCH BACKFILL, REFER TO IDOT SSRBC, ARTICLE 1003.04.

2. FOR GRANULAR EMBEDMENT, USE CA-11, CRUSHED GRAVEL, CRUSHED STONE, OR CRUSHED CONCRETE.

3. FOR STABILIZATION STONE, 12'' OF CA-1 STONE IS ONLY REQUIRED WHEN UNSTABLE MATERIAL IS ENCOUNTERED AT TRENCH BOTTOM.

4. AGGREGATE PLACED FOR TEMPORARY SURFACE RESTORATION WILL NOT BE PAID SEPARATELY AND SHALL BE INCIDENTAL TO THE CONTRACT.

SEWER TRENCH DETAIL

NOTES:

1. ALL DRAIN CONNECTION JOINTS MUST BE MADE AS SPECIFIED IN SPECIFICATIONS..
2. FOR DUCTILE IRON PIPE DRAIN CONNECTIONS SEE SHEET NO. A.2.
3. FOR BACKFILL OF HATCHED SUPPORT AREAS, USE CONCRETE. CA-11, FLOWABLE FILL, OR CLSM.

STANDARD REVISIONS	
DATE	DESCRIPTION
7/3/18	APPROVED PLAN

PERCENT COMPLETE	DATE
30	11-22-19
60 REV	04-09-20
75 REV	05-28-20
90 REV	08-05-20
100	08-21-20
BULLETIN	

CITY OF CHICAGO
DEPARTMENT OF WATER MANAGEMENT
BUREAU OF ENGINEERING SERVICES

VITRIFIED CLAY PIPE DRAIN CONNECTIONS AND SEWER TRENCH DETAIL

DRAWN: SBW
DESIGNED:
CHECKED: GD, GC, SO
REVIEWED:

A.1

45 OF 69

PN 7500

$FILE$
$DATE$

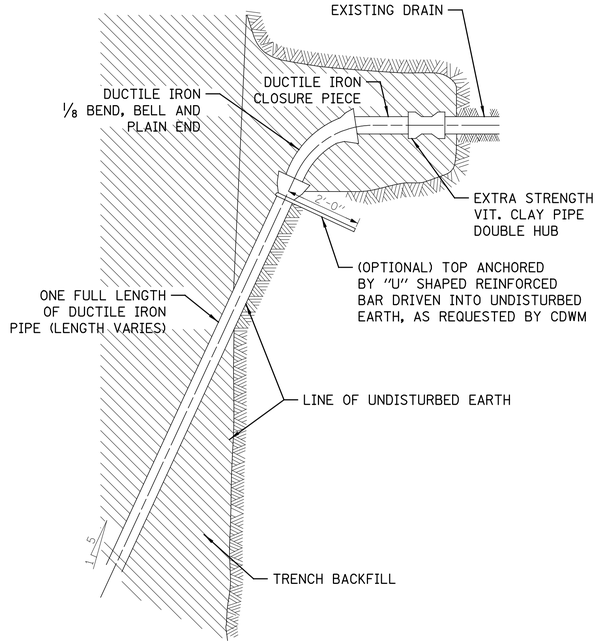

TYPICAL DRAIN CONNECTIONS FOR EXISTING DRAINS

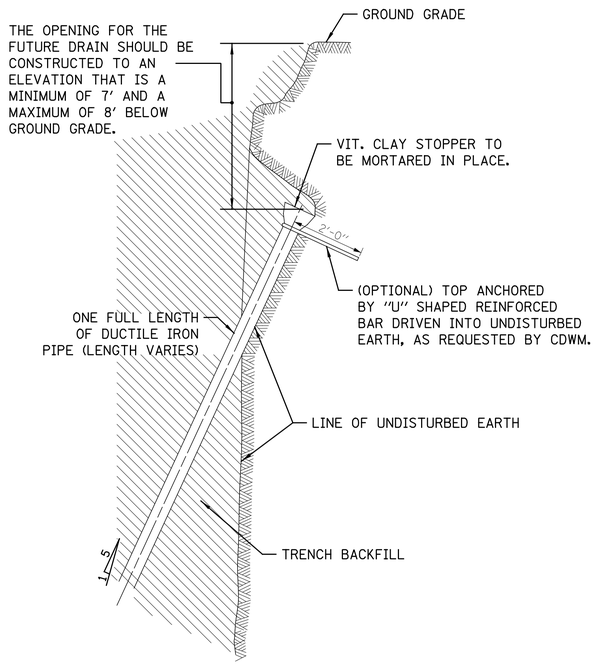

TYPICAL DRAIN STACKS FOR FUTURE USE

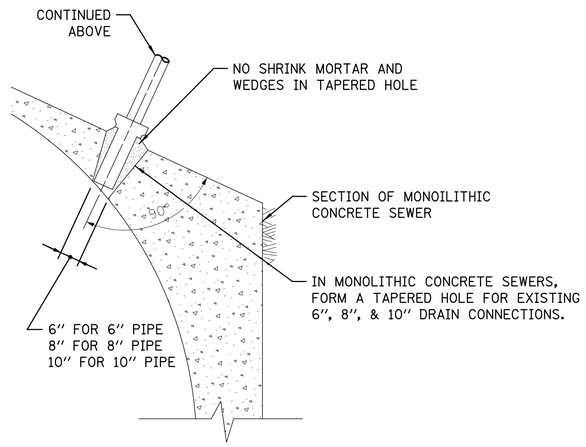

FOR MONOLITHIC CONCRETE SEWERS

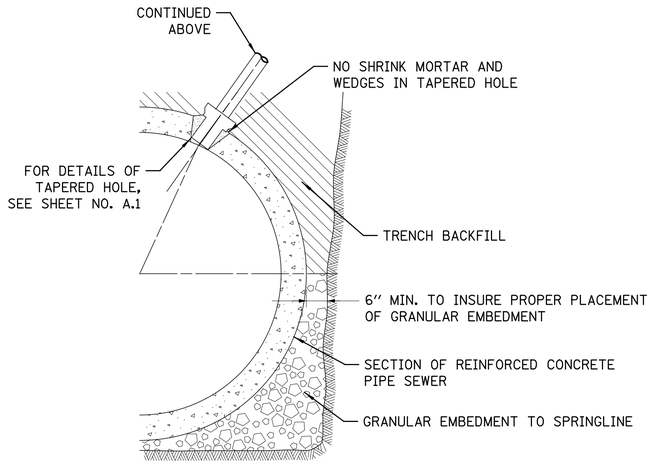

FOR REINFORCED CONCRETE PIPE SEWERS

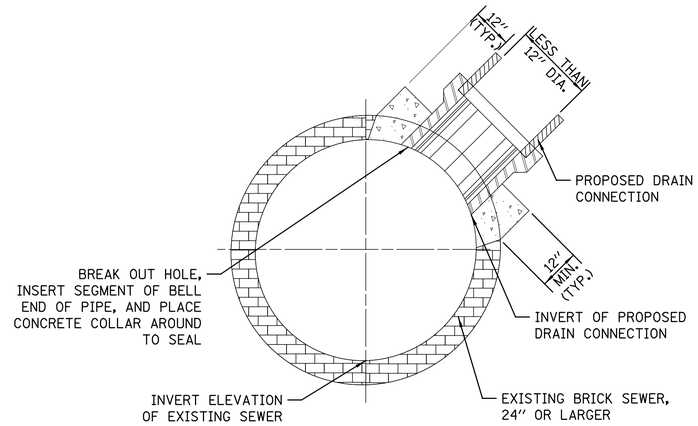

(NOT TO SCALE)

FOR BRICK SEWERS

DUCTILE IRON PIPE DRAIN CONNECTIONS

BRICK SEWER DRAIN CONNECTIONS

NOTES:
1. DUCTILE IRON PIPE MUST BE BELL END WITH PUSH-ON JOINTS CONFORMING TO ANSI SPECIFICATIONS A21.51 WITH CLASS 52 THICKNESS.
2. CONNECTIONS AND STACKS SHOWN MUST BE USED FOR 6", 8", & 10" DRAINS ONLY.
3. FOR VITRIFIED CLAY PIPE DRAIN CONNECTION AND DRAIN STACK CONSTRUCTION, SEE SHEET NO. A.1.
4. FOR TRENCH BACKFILL, REFER TO IDOT SSRBC, ARTICLE 1003.04.
5. FOR GRANULAR EMBEDMENT, USE CA-11, CRUSHED GRAVEL, CRUSHED STONE, OR CRUSHED CONCRETE.

STANDARD REVISIONS	
DATE	DESCRIPTION
9/20/17	APPROVED PLAN

PERCENT COMPLETE	DATE
30	11-22-19
60 REV	04-09-20
75 REV	05-28-20
90 REV	08-05-20
100	08-21-20
BULLETIN	

CITY OF CHICAGO
DEPARTMENT OF WATER MANAGEMENT
BUREAU OF ENGINEERING SERVICES

DUCTILE IRON PIPE DRAIN CONNECTIONS

DRAWN: SBW
DESIGNED:
CHECKED:
REVIEWED:

A.2

46 OF 69

PN 7500

$FILE$
$DATE$

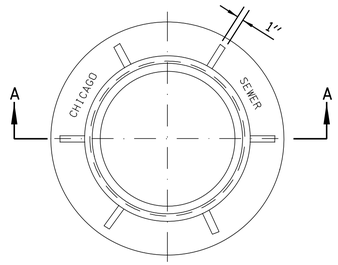

PLAN

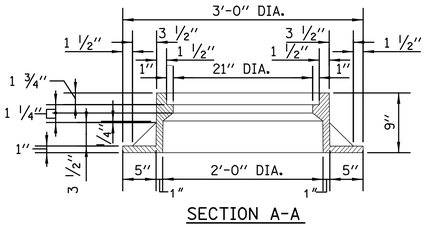

SECTION A-A

NOTE: METAL PLATES MUST BE FURNISHED FOR PERFORATED LIDS ON MANHOLES.

HEAVYWEIGHT MANHOLE FRAME

MATERIAL: CAST IRON

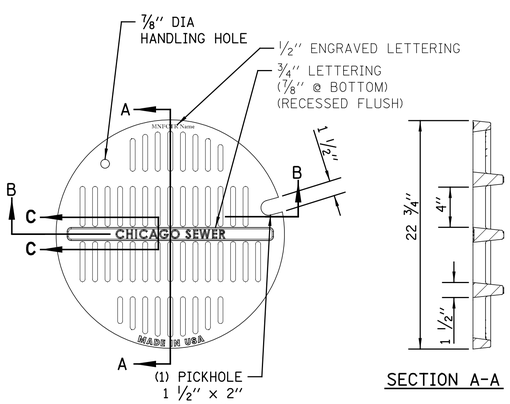

SECTION A-A

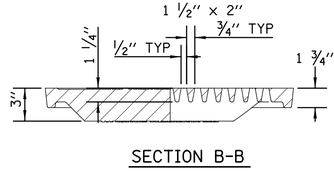

SECTION B-B

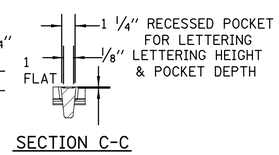

SECTION C-C

MATERIALS
GRATE-GRAY IRON
ASTM A48 CL35B
DESIGN LOAD
HEAVY DUTY
COATING
UNDIPPED
OPEN AREA
85.6 SQ. IN.

STANDARD CB/MH LID

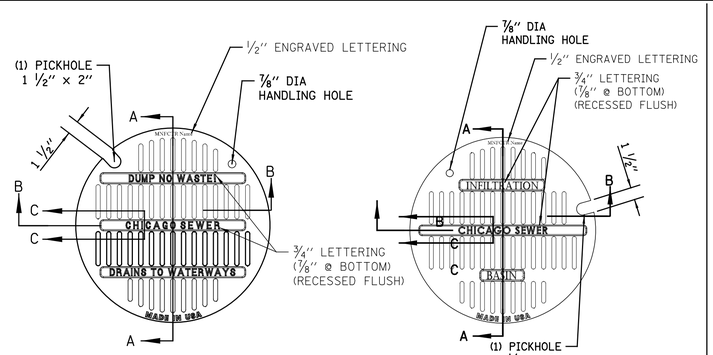

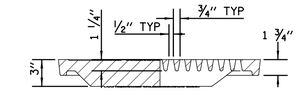

SECTION B-B

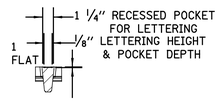

SECTION C-C

MATERIALS
GRATE-GRAY IRON
ASTM A48 CL35B
DESIGN LOAD
HEAVY DUTY
COATING
UNDIPPED
OPEN AREA
85.6 SQ. IN.

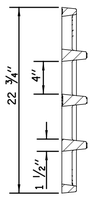

SECTION A-A

STANDARD LID FOR STORM ONLY/ INFILTRATION SYSTEMS

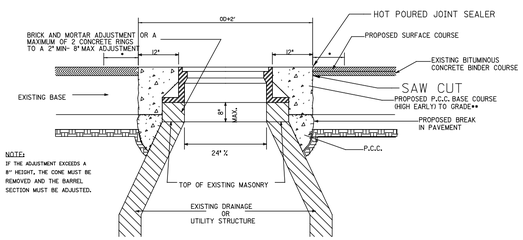

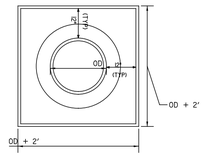

PLAN VIEW (BASE TO GRADE)

*REFER TO CDOT FOR ASPHALT RESTORATION REQUIREMENTS & CRACK SEALING.

** ON NON-MORATORIUM STREETS, FULL-DEPTH PCC BASE COURSE MAY BE UTILIZED. ON MORATORIUM STREETS, PAVEMENT RESTORATION SHALL ADHERE T CDOT REQUIREMENTS.

NOTES:

IF THE ADJUSTMENT EXCEEDS AN 8" HEIGHT, THE CONE MUST BE REMOVED AND THE BARREL SECTION MUST BE ADJUSTED.

THE CONTRACTOR IS REQUIRED TO REPLACE ANY BROKEN FRAMES AND LIDS OF SEWER STRUCTURES WITH STANDARD FRAMES AND LIDS OF THE DWM. IN ADJUSTMENT OR RECONSTRUCTION OF SEWER STRUCTURES, ANY NON-STANDARD FRAMES AND LIDS MUST BE REPLACED WITH STANDARD FRAMES AND LIDS. IN ADJUSTMENT OR RECONSTRUCTION OF INLETS, ANY NON-STANDARD INLETS (GUTTER BOXES) MUST BE REPLACED WITH DWM STANDARD INLETS.

THE FRAMES AND LIDS OF SEWER STRUCTURES TO BE ABANDONED, REMOVED, OR FILLED MUST BE SALVAGED AND THE DWM NOTIFIED FOR PICK UP.

MANHOLES, CATCH BASINS AND INLETS MUST BE PROTECTED FROM THE ENTRY OF ASPHALT/DEBRIS INTO THE SEWER SYSTEM DURING CONSTRUCTION. THE CONTRACTOR MUST MARK LOCATIONS OF ALL SEWER STRUCTURES ON THE SIDEWALK BEFORE STARTING PAVEMENT REMOVAL/REPLACEMENT. ADJUSTMENT OF FRAMES AND LIDS OF SEWER STRUCTURES MUST BE COMPLETED PRIOR TO STREET RESURFACING.

DETAIL OF FRAME ADJUSTMENT

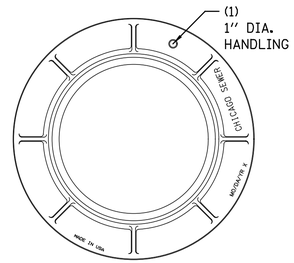

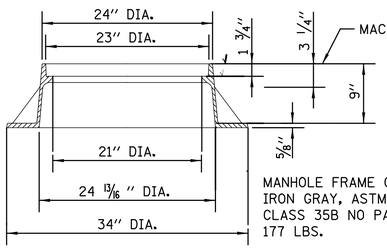

MANHOLE FRAME CAST IRON GRAY, ASTM A-48 CLASS 35B NO PAINT 177 LBS.

LIGHTWEIGHT MANHOLE FRAME

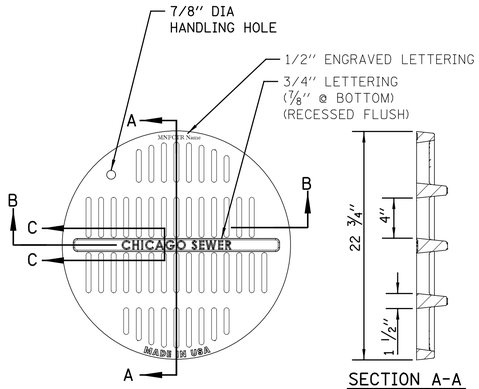

SECTION A-A

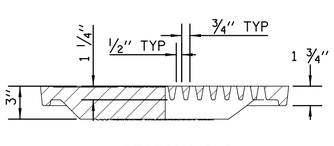

SECTION B-B

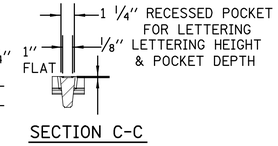

SECTION C-C

ADA COMPLIANT CATCH BASIN/MANHOLE LID

NOTE:
NOT TO BE USED WITHOUT PRIOR APPROVAL OF CDWM

MATERIALS
GRATE-GRAY IRON
ASTM A48 CL35B
DESIGN LOAD
HEAVY DUTY
COATING
UNDIPPED
OPEN AREA
85.6 SQ. IN.

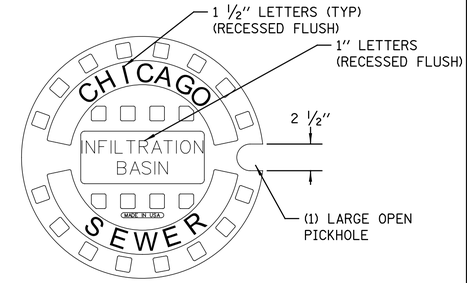

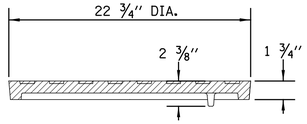

COVER SECTION

INFILTRATION SOLID LID FOR CATCH BASIN

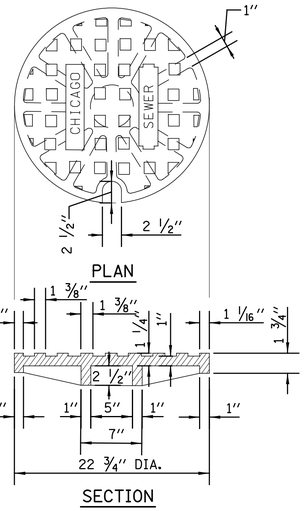

PLAN

SECTION

SOLID LID FOR MANHOLES

STANDARD REVISIONS	
DATE	DESCRIPTION
10/1/19	Approved

PERCENT COMPLETE	DATE
30	11-22-19
60 REV	04-09-20
75 REV	05-28-20
90 REV	08-05-20
100	08-21-20
BULLETIN	

CITY OF CHICAGO
DEPARTMENT OF WATER MANAGEMENT
BUREAU OF ENGINEERING SERVICES

MANHOLE
LIDS AND FRAMES

DRAWN: SBW
DESIGNED:
CHECKED: GD, GC, SO
REVIEWED:

A.3

47 OF 69

PN 7500

$FILE$
$DATE$

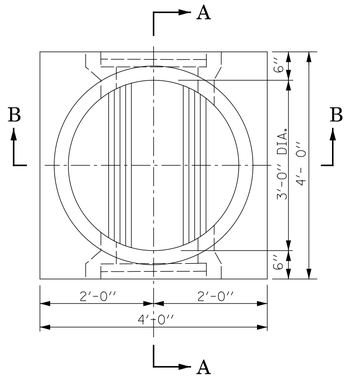

PLAN

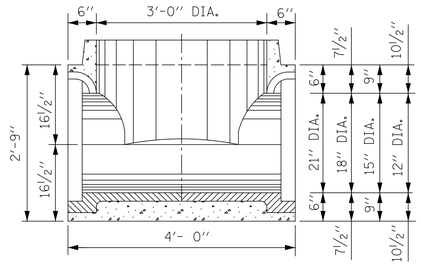

SECTION A-A

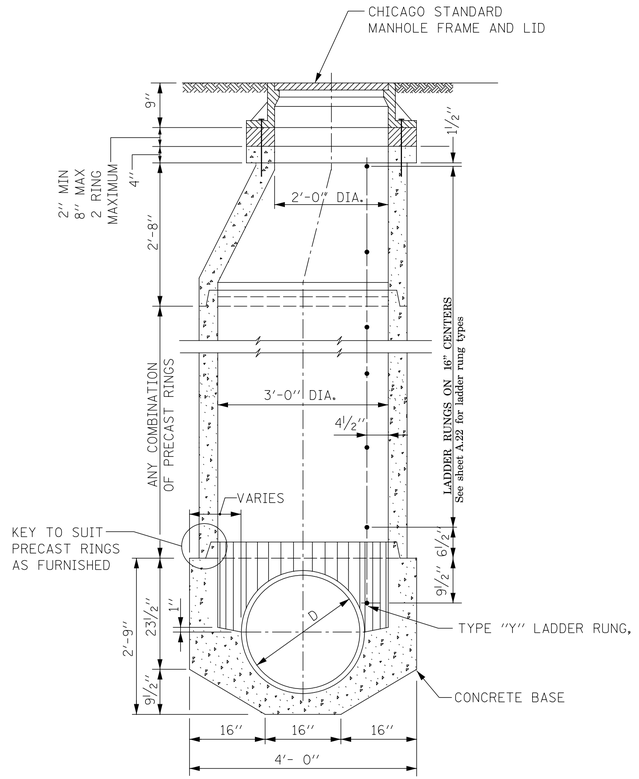

SECTION B-B

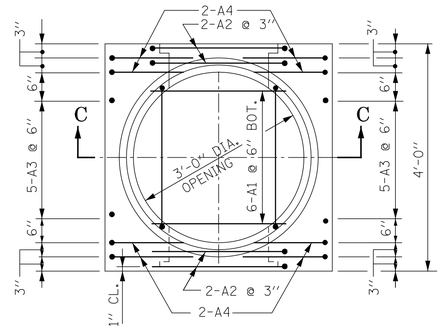

PLAN
PRECAST BASE

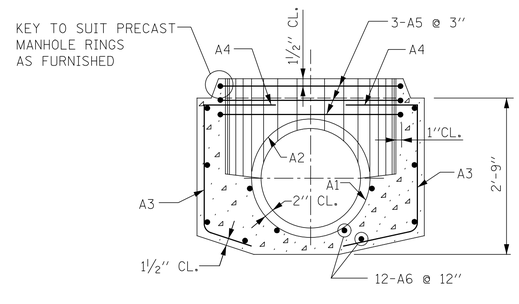

SECTION C-C

NOTE:
6'' MINIMUM GRANULAR EMBEDMENT
UNDER ALL PRECAST MANHOLE BASES

SCHEDULE OF REINFORCEMENT

STRUCTURE		REINFORCEMENT BAR							BENDING DIMENSIONS											
		MARK	SIZE NO.	TYPE	LENGTH	NO. REQD.	WEIGHT – LBS EACH	WEIGHT – LBS TOTAL	A	B	C	D	E	F	G	H	J	K	O	R
BASES FOR TYPE ''A'' MANHOLES (PRECAST)	21'' DIA.	21A1	6	9	3'-1''	6	4.63	28		3'-1''						11¼''			2'-1''	12¾''
		21A2	6	T3	8'-8''	4	13.02	52										2'-0''	2'-1½''	
		21A3	5	12	3'-3''	10	3.39	34			22''	17''				14½''		8¾''		
		21A4	5	12	4'-6''	8	4.69	38		15''	22''	17''				14½''		8¾''		
		21A5	5	T3	11'-11''	3	12.43	37										20''	3'-3¼''	
		21A6	4	STR	3'-8''	12	2.45	30												
		TOTAL						219												
	18'' DIA.	18A1	6	9	2'-8½''	6	4.07	24		2'-8½''							9¾''		22''	11¼''
		18A2	6	T3	7'-10½''	4	11.83	47										2'-0''	22½''	
		18A3	5	12	3'-3''	10	3.39	34			22''	17''					14½''	8¾''		
		18A4	5	12	4'-6''	8	4.69	38		15''	22''	17''					14½''	8¾''		
		18A5	5	T3	11'-11''	3	12.43	37										2'-0''	3'-3¼''	
		18A6	4	STR	3-8''	12	2.45	30												
		TOTAL						202												
	15'' DIA.	15A1	6	9	2'-3½''	6	3.44	21		23½''						8¼''			19''	9¾''
		15A2	6	T3	7'-1''	4	10.64	42										2'-0''	19½''	
		15A3	5	12	3'-3''	10	3.39	34			22''	17''						8¾''		
		15A4	5	12	4'-6''	8	4.69	38		15''	22''	17''				14½''		8¾''		
		15A5	5	T3	11'-11''	3	12.43	37								14½''		20''	3'-3¾''	
		15A6	4	STR	3'-8''	12	2.45	30												
		TOTAL						202												
	12'' DIA.	12A1	6	9	1'-11''	6	2.88	17		23''						6¾''			16''	8¼''
		12A2	6	T3	6'-1''	4	9.14	37										2'-0''	16½''	
		12A3	5	12	3'-3''	10	3.39	34			22''	17''				14½''		8¾''		
		12A4	5	12	4'-6''	8	4.69	38			22''	17''				14½''		8¾''		
		12A5	5	T3	11'-11''	3	12.43	37										20''	3'-3¼''	
		12A6	4	STR.	3'-8''	12	2.45	30												
		TOTAL						193												

STANDARD REVISIONS	
DATE	DESCRIPTION
9/5/17	REVISION

PERCENT COMPLETE		DATE
30		11-22-19
60	REV	04-09-20
75	REV	05-28-20
90	REV	08-05-20
100		08-21-20
BULLETIN		

CITY OF CHICAGO
DEPARTMENT OF WATER MANAGEMENT
BUREAU OF ENGINEERING SERVICES

TYPE ''A'' PRECAST
MANHOLE FOR SEWERS
21'' DIA. AND SMALLER

DRAWN: SBW
DESIGNED:
CHECKED:
REVIEWED:

A.5

48 OF 69

PN 7500

$FILE$
$DATE$

NUMBER OF PRECAST RINGS REQUIRED FOR MANHOLES OF VARIOUS HEIGHTS

TOTAL HEIGHT "H"	9" FRAME +2'-8" CORBEL =3'-5"	PRECAST RINGS 4'-0"	2'-8"	1'-4"	8"	4"	BRICK AND/OR MORTAR	TOTAL HEIGHT "H"	9" FRAME +2'-8" CORBEL =3'-5"	PRECAST RINGS 4'-0"	2'-8"	1'-4"	8"	4"	BRICK AND/OR MORTAR	TOTAL HEIGHT "H"	9" FRAME +2'-8" CORBEL =3'-5"	PRECAST RINGS 4'-0"	2'-8"	1'-4"	8"	4"	BRICK AND/OR MORTAR
5'-0"	3'-5"			1			3"	12'-0"	3'-5"	2				1	3"	19'-0"	3'-5"	3	1		1		3"
1"	"			1			4"	1"	"	2				1	4"	1"	"	3	1		1		4"
2"	"			1		1	1"	2"	"	2			1		1"	2"	"	3	1		1	1	1"
3"	"			1		1	2"	3"	"	2			1		2"	3"	"	3	1		1	1	2"
4"	"			1		1	3"	4"	"	2			1		3"	4"	"	3	1		1	1	3"
5"	"			1		1	4"	5"	"	2			1		4"	5"	"	3	1		1	1	4"
6"	"			1			1"	6"	"	2			1	1	1"	6"	"	4					1"
7"	"			1			2"	7"	"	2			1	1	2"	7"	"	4					2"
8"	"			1			3"	8"	"	2			1	1	3"	8"	"	4					3"
9"	"			1			4"	9"	"	2			1	1	4"	9"	"	4					4"
10"	"			1		1	1"	10"	"	2		1			1"	10"	"	4				1	1"
11"	"			1		1	2"	11"	"	2		1			2"	11"	"	4				1	2"
6'-0"	3'-5"			1		1	3"	13'-0"	3'-5"	2		1			3"	20'-0"	3'-5"	4				1	3"
1"	"			1		1	4"	1"	"	2		1			4"	1"	"	4				1	4"
2"	"		1		1		1"	2"	"	2		1		1	1"	2"	"	4			1		1"
3"	"		1		1		2"	3"	"	2		1		1	2"	3"	"	4			1		2"
4"	"		1		1		3"	4"	"	2		1		1	3"	4"	"	4			1		3"
5"	"		1		1		4"	5"	"	2		1		1	4"	5"	"	4			1		4"
6"	"		1		1	1	1"	6"	"	2		1	1		1"	6"	"	4			1	1	1"
7"	"		1		1	1	2"	7"	"	2		1	1		2"	7"	"	4			1	1	2"
8"	"		1		1	1	3"	8"	"	2		1	1		3"	8"	"	4			1	1	3"
9"	"		1		1	1	4"	9"	"	2		1	1		4"	9"	"	4			1	1	4"
10"	"		1		1		1"	10"	"	2		1	1	1	1"	10"	"	4		1			1"
11"	"		1		1		2"	11"	"	2		1	1	1	2"	11"	"	4		1			2"
7'-0"	3'-5"		1		1		3"	14'-0"	3'-5"	2		1	1	1	3"	21'-0"	3'-5"	4		1			3"
1"	"		1		1		4"	1"	"	2		1	1	1	4"	1"	"	4		1			4"
2"	"		1		1	1	1"	2"	"	2	1				1"	2"	"	4		1		1	1"
3"	"		1		1	1	2"	3"	"	2	1				2"	3"	"	4		1		1	2"
4"	"		1		1	1	3"	4"	"	2	1				3"	4"	"	4		1		1	3"
5"	"		1		1	1	4"	5"	"	2	1				4"	5"	"	4		1		1	4"
6"	"	1					1"	6"	"	2	1			1	1"	6"	"	4		1	1		1"
7"	"	1					2"	7"	"	2	1			1	2"	7"	"	4		1	1		2"
8"	"	1					3"	8"	"	2	1			1	3"	8"	"	4		1	1		3"
9"	"	1					4"	9"	"	2	1			1	4"	9"	"	4		1	1		4"
10"	"	1				1	1"	10"	"	2	1		1		1"	10"	"	4		1	1	1	1"
11"	"	1				1	2"	11"	"	2	1		1		2"	11"	"	4		1	1	1	2"
8'-0"	3'-5"	1				1	3"	15'-0"	3'-5"	2	1		1		3"	22'-0"	3'-5"	4		1	1	1	3"
1"	"	1				1	4"	1"	"	2	1		1		4"	1"	"	4		1	1	1	4"
2"	"	1					1"	2"	"	2	1		1	1	1"	2"	"	4	1				1"
3"	"	1					2"	3"	"	2	1		1	1	2"	3"	"	4	1				2"
4"	"	1					3"	4"	"	2	1		1	1	3"	4"	"	4	1				3"
5"	"	1					4"	5"	"	2	1		1	1	4"	5"	"	4	1				4"
6"	"	1				1	1"	6"	"	3					1"	6"	"	4	1			1	1"
7"	"	1				1	2"	7"	"	3					2"	7"	"	4	1			1	2"
8"	"	1				1	3"	8"	"	3					3"	8"	"	4	1			1	3"
9"	"	1				1	4"	9"	"	3					4"	9"	"	4	1			1	4"
10"	"	1		1			1"	10"	"	3				1	1"	10"	"	4	1		1		1"
11"	"	1		1			2"	11"	"	3				1	2"	11"	"	4	1		1		2"
9'-0"	3'-5"	1		1			3"	16'-0"	3'-5"	3				1	3"	23'-0"	3'-5"	4	1		1		3"
1"	"	1		1			4"	1"	"	3				1	4"	1"	"	4	1		1		4"
2"	"	1		1		1	1"	2"	"	3			1		1"	2"	"	4	1		1	1	1"
3"	"	1		1		1	2"	3"	"	3			1		2"	3"	"	4	1		1	1	2"
4"	"	1		1		1	3"	4"	"	3			1		3"	4"	"	4	1		1	1	3"
5"	"	1		1		1	4"	5"	"	3			1		4"	5"	"	4	1		1	1	4"
6"	"	1		1			1"	6"	"	3			1	1	1"	6"	"	5					1"
7"	"	1		1			2"	7"	"	3			1	1	2"	7"	"	5					2"
8"	"	1		1			3"	8"	"	3			1	1	3"	8"	"	5					3"
9"	"	1		1			4"	9"	"	3			1	1	4"	9"	"	5					4"
10"	"	1		1		1	1"	10"	"	3			1		1"	10"	"	5				1	1"
11"	"	1		1		1	2"	11"	"	3			1		2"	11"	"	5				1	2"
10'-0"	3'-5"	1		1		1	3"	17'-0"	3'-5"	3		1			3"	24'-0"	3'-5"	5				1	3"
1"	"	1		1		1	4"	1"	"	3		1			4"	1"	"	5				1	4"
2"	"	1	1		1		1"	2"	"	3		1		1	1"	2"	"	5			1		1"
3"	"	1	1		1		2"	3"	"	3		1		1	2"	3"	"	5			1		2"
4"	"	1	1		1		3"	4"	"	3		1		1	3"	4"	"	5			1		3"
5"	"	1	1		1		4"	5"	"	3		1		1	4"	5"	"	5			1		4"
6"	"	1	1		1	1	1"	6"	"	3		1	1		1"	6"	"	5			1	1	1"
7"	"	1	1		1	1	2"	7"	"	3		1	1		2"	7"	"	5			1	1	2"
8"	"	1	1		1	1	3"	8"	"	3		1	1		3"	8"	"	5			1	1	3"
9"	"	1	1		1	1	4"	9"	"	3		1	1		4"	9"	"	5			1	1	4"
10"	"	1	1		1		1"	10"	"	3		1	1	1	1"	10"	"	5		1			1"
11"	"	1	1		1		2"	11"	"	3		1	1	1	2"	11"	"	5		1			2"
11'-0"	3'-5"	1	1		1		3"	18'-0"	3'-5"	3		1	1	1	3"	25'-0"	3'-5"	5		1			3"
1"	"	1	1		1		4"	1"	"	3		1	1	1	4"	1"	"	5		1			4"
2"	"	1	1		1	1	1"	2"	"	3	1				1"	2"	"	5		1		1	1"
3"	"	1	1		1	1	2"	3"	"	3	1				2"	3"	"	5		1		1	2"
4"	"	1	1		1	1	3"	4"	"	3	1				3"	4"	"	5		1		1	3"
5"	"	1	1		1	1	4"	5"	"	3	1				4"	5"	"	5		1		1	4"
6"	"	2					1"	6"	"	3	1			1	1"	6"	"	5		1	1		1"
7"	"	2					2"	7"	"	3	1			1	2"	7"	"	5		1	1		2"
8"	"	2					3"	8"	"	3	1			1	3"	8"	"	5		1	1		3"
9"	"	2					4"	9"	"	3	1			1	4"	9"	"	5		1	1		4"
10"	"	2				1	1"	10"	"	3	1		1		1"	10"	"	5		1	1	1	1"
11"	"	2				1	2"	11"	"	3	1		1		2"	11"	"	5		1	1	1	2"

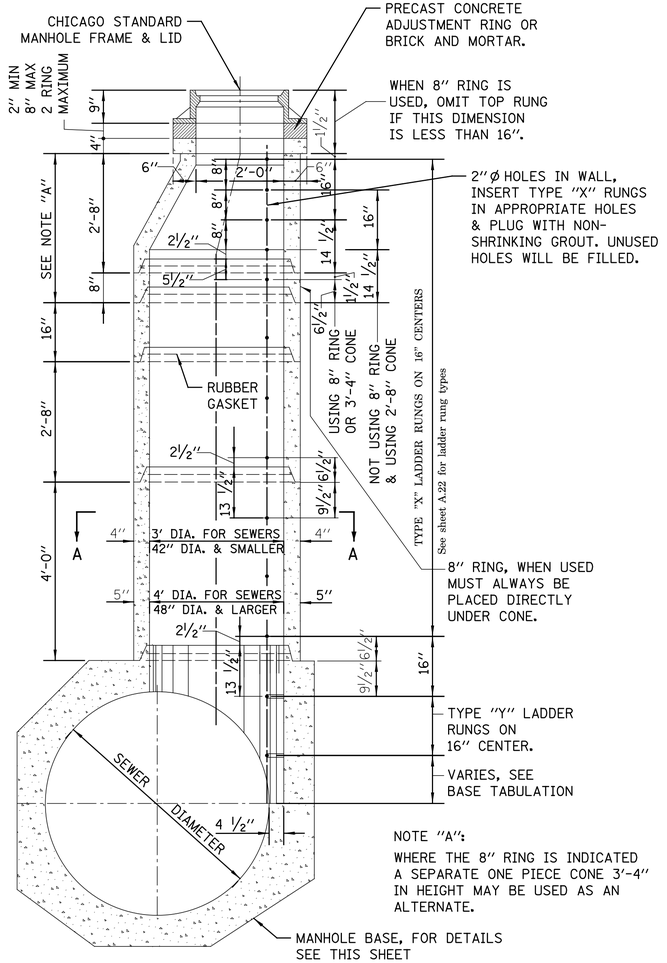

DETAIL OF PRECAST RINGS

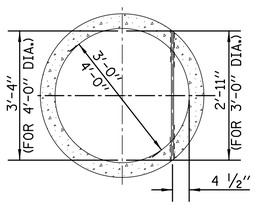

1"Ø LADDER RUNG,TYPE "X", LENGTH 2'-11" OR 3'-4" INSERTED INTO 2"Ø HOLE IN WALL & PLUGGED BY MANUFACTURER WITH NON-SHRINKING GROUT.

SECTION A-A

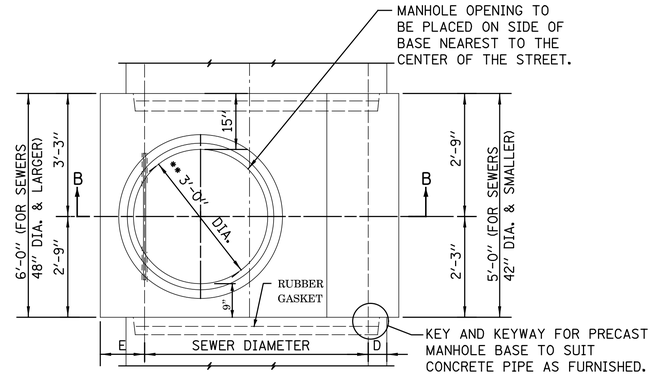

PLAN ** { 3'-0" DIA. FOR SEWERS 42" DIA. & SMALLER
4'-0" DIA. FOR SEWERS 48" DIA. & LARGER

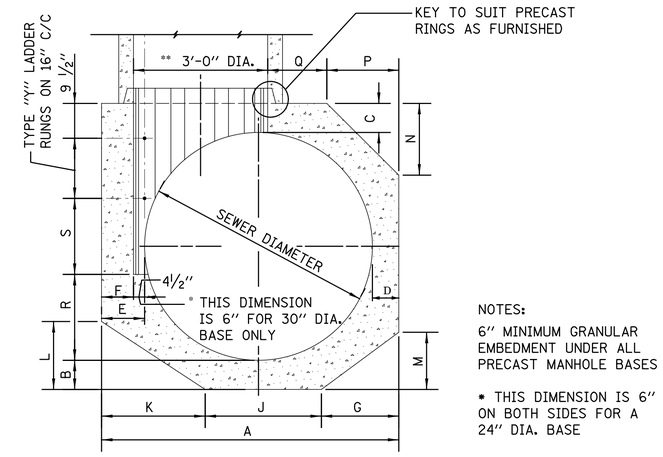

SECTION B-B

NOTES:
6" MINIMUM GRANULAR EMBEDMENT UNDER ALL PRECAST MANHOLE BASES

* THIS DIMENSION IS 6" ON BOTH SIDES FOR A 24" DIA. BASE

DETAIL OF PRECAST BASE

SEWER DIA.	DIMENSIONS OF PRECAST MANHOLE BASE A	B	C	D	E	F	G	J	K	L	M	N	P	Q	R	S	# "Y" RUNGS
36"	4'-4"*	6"	6"	6"	10"*	6"	16"	16"	20"*	12"*	9"*	—	—	10"*	18"	14"*	1
30"	4'-0"	6"	6"	6"	12"	6"	14"	14"	20"	12"	8"*	—	—	6"	15"	11"*	1
24"	4'-0"	6"	6"	12"	12"	6"	16"	16"	16"	9"*	9"*	—	—	6"	12"	8"*	1

NOTES:

PRECAST CONCRETE RINGS MUST CONFORM TO A.S.T.M. DESIGNATION C76 FOR "REINFORCED CONCRETE CULVERT, STORM DRAIN, AND SEWER PIPE", CLASS II, WALL B.

STANDARD LENGTHS OF RINGS ARE: 4'-0", 2'-8". 1'-4", 0'-8" AND 0'-4" COLLAR.

ALL REINFORCEMENT STEEL REQUIRED FOR PRECAST RINGS MUST BE INCLUDED IN THE PRICE BID FOR ALL MANHOLE ITEMS.

ALL PIPE AND FITTINGS 24 INCHES IN DIAMETER AND LARGER MUST BE CLASS III, IV AND V REINFORCED CONCRETE PIPE AS SPECIFIED IN THE SPECIFICATIONS FOR "REINFORCED CONCRETE CULVERT STORM DRAIN, AND SEWER PIPE." A.S.T.M. DESIGNATION C76, TABLE III, IV AND V, WALL B OR WALL C WITH CIRCULAR OR ELLIPTICAL REINFORCEMENT

STANDARD REVISIONS	
DATE	DESCRIPTION
9/19/17	APPROVED PLAN

PERCENT COMPLETE	DATE
30	11-22-19
60 REV	04-09-20
75 REV	05-28-20
90 REV	08-05-20
100	08-21-20
BULLETIN	

CITY OF CHICAGO
DEPARTMENT OF WATER MANAGEMENT
BUREAU OF ENGINEERING SERVICES

TYPE "A" MANHOLE PRECAST RISERS, BASES AND RINGS 24" AND LARGER

DRAWN: SBW
DESIGNED:
CHECKED:
REVIEWED:

A.6

49 OF 69

PN 7500

$FILE$
$DATE$

STRUCTURE		REINFORCEMENT BAR						BENDING DIMENSIONS											
	MARK	SIZE NO.	TYPE	LENGTH	NO. REQD.	WEIGHT – LBS EACH	WEIGHT – LBS TOTAL	A	B	C	D	E	F	G	H	J	K	O	R
BASES FOR TYPE "A" MANHOLES (Precast) 36" DIA.	36A1	6	T3	12'-7"	6	18.90	113										2'-0"	3'-4"*	
	36A2	5	9	6'-0"	4	6.26	25		6'-0"						2'-2"			3'-0"	20"
	36A3	5	12	4'-6"	4	4.69	19			2'-9"	21"				18"		10"*		
	36A4	5	12	5'-0"	5	5.22	26		7"	3'-0"	17"				14"*		8"*		
	36A5	5	12	5'-9"	5	6.00	30		15"	2'-9"	21"				18"		10"*		
	36A6	5	T3	11-11"	3	12.43	37										20"	3'-3"*	
	36A7	5	12	5'-8"	5	5.91	30		15"	3'-0"	17"				14"*		8"*		
	36A8	4	STR.	4'-8"	18	3.12	56												
	TOTAL						336												
30" DIA.	30A1	6	T3	11'-1"	6	16.65	100										2'-0"	2'-10"*	
	30A2	5	9	4'-4"	4	4.52	18		4'-4"						18"			2'-10"	17"
	30A3	5	12	4'-0"	4	4.17	17			2'-3"	21"				18"		10"*		
	30A4	5	12	3'-10"	5	4.00	20			2'-7"	15"				12"*		7"*		
	30A5	5	12	5'-3"	5	5.48	27		15"	2'-3"	21"				18"		10"*		
	30A6	5	T3	11'-11"	3	12.43	37										20"	3'-3"*	
	30A7	5	12	5'-1"	5	5.30	26		15"	2'-7"	15"				12"*		7"*		
	30A8	4	STR	4'-8"	15	3.12	47												
	TOTAL						292												
24" DIA.	24A1	6	9	3'-5"	6	5.13	31		3'-5"						13"			2'-3"*	14"*
	24A2	6	T3	9'-4"	7	14.02	98										22"	2'-4"*	
	24A3	5	12	3'-6"	10	3.65	37			2'-1"	17"				14"*		8"*		
	24A4	5	12	4'-9"	10	4.96	50		15"	2'-1"	17"				14"*		8"*		
	24A5	5	T3	11'-11"	3	12.43	37										20"	3'-3"*	
	24A6	4	STR.	4'-8"	12	3.12	37												
	TOTAL						280												

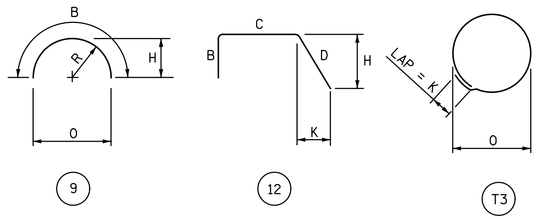

NOTES:
ALL DIMENSIONS ARE OUT TO OUT OF BAR.

BENDING RADII "R" TO OUTSIDE OF BAR.

NUMBERS IN CIRCLES DENOTE BAR TYPE.

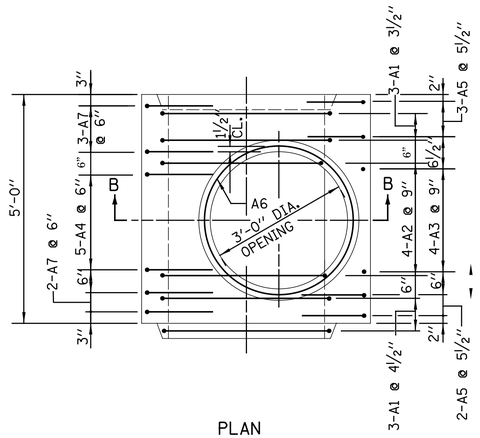

PLAN

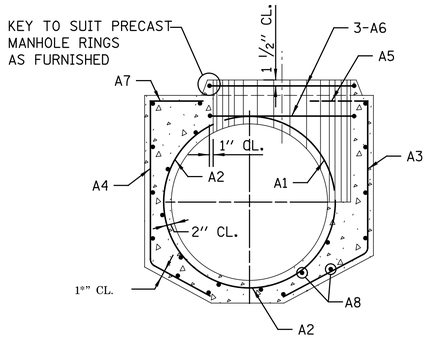

SECTION B-B

MANHOLE BASE FOR SEWERS 36" DIA.

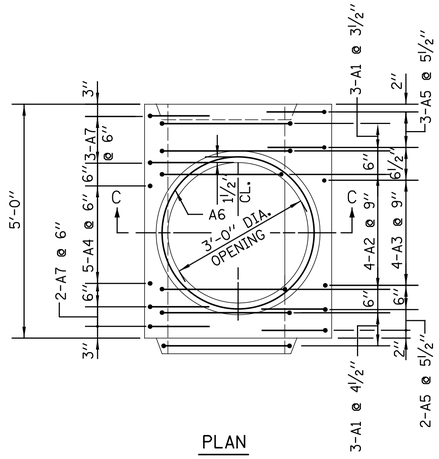

PLAN

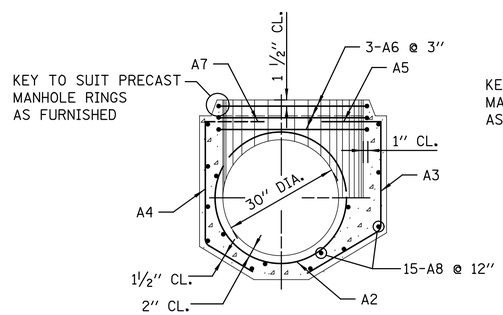

SECTION C-C

MANHOLE BASE FOR 30" DIA. SEWERS

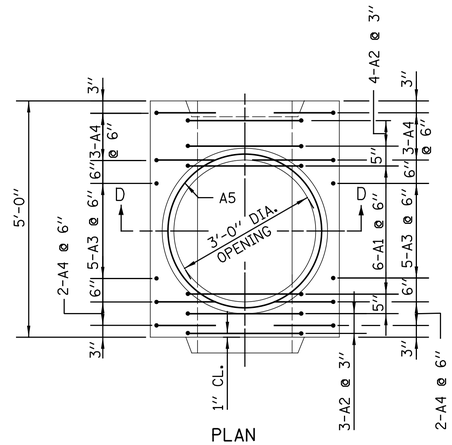

PLAN

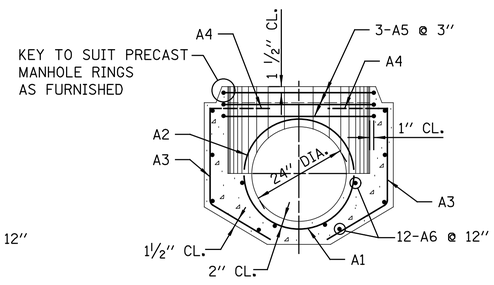

SECTION D-D

MANHOLE BASE FOR 24" DIA. SEWERS

PLACING OF CONCRETE- CONCRETE MUST BE PLACED IN ACCORDANCE WITH THE METHOD OUTLINED IN THE CITY OF CHICAGO STANDARD SPECIFICATIONS.
CONSTRUCTION JOINTS - JOINTS NOT INDICATED ON THE DRAWINGS MUST BE SO MADE AND LOCATED AS NOT TO IMPAIR THE STRENGTH OF THE STRUCTURE AND MUST BE APPROVED BY THE COMMISSIONER. JOINTS MUST BE CONSTRUCTED IN ACCORDANCE WITH THE METHOD OUTLINED IN THE SPECIFICATIONS.

CONCRETE PROTECTION FOR REINFORCEMENT- ALL REINFORCING STEEL MUST HAVE CLEAR CONCRETE COVERING AS FOLLOWS (UNLESS OTHERWISE NOTED) :
3" AT EXTERIOR SURFACES WHERE CONCRETE IS DEPOSITED AGAINST THE GROUND;
2.5" AT SURFACES WHERE CONCRETE IS FORMED BUT SUBSEQUENTLY WILL BE IN CONTACT WITH SEWAGE; 2" AT ALL OTHER SURFACES.

REINFORCING STEEL- ALL REINFORCING BARS MUST BE ACCURATELY PLACED AND SECURELY SUPPORTED BY BAR SUPPORTS, SPACERS OR HIGH CHAIRS.
ALL LAPS IN REINFORCING STEEL MUST BE BASED UPON THE 1989, ACI BUILDING CODE.
UNLESS OTHERWISE NOTED. HOOKS AND BENDS ON BARS MUST CONFORM TO RECOMMENDED DETAILS AS GIVEN IN THE "MANUAL OF STANDARD PRACTICE", C.R.S.I. 1990.

THE FOLLOWING ABBREVIATIONS ARE USED TO INDICATE THE LOCATION OF REINFORCING BARS:

T.	DENOTES	TOP	N.F.	DENOTES	NEAR FACE
BOT.	DENOTES	BOTTOM	F.F.	DENOTES	FAR FACE
I.F.	DENOTES	INSIDE FACE	E.F.	DENOTES	EACH FACE
O.F.	DENOTES	OUTSIDE FACE	E.W.	DENOTES	EACH WAY

PLACING BAR SUPPORTS- ALL REINFORCING BARS MUST BE SUPPORTED, ANCHORED AND TIED AND MUST CONFORM TO THE "RECOMMENDED PRACTICE FOR PLACING REINFORCING BARS", 1986, PREPARED BY THE CONCRETE REINFORCING STEEL INSTITUTE.

STANDARD REVISIONS	
DATE	DESCRIPTION
2/23/17	REVISION

PERCENT COMPLETE		DATE
30		11-22-19
60	REV	04-09-20
75	REV	05-28-20
90	REV	08-05-20
100		08-21-20
BULLETIN		

CITY OF CHICAGO
DEPARTMENT OF WATER MANAGEMENT
BUREAU OF ENGINEERING SERVICES

REINFORCEMENT FOR TYPE "A" PRECAST BASES AND RINGS 24" to 36"

DRAWN: SBW
DESIGNED:
CHECKED:
REVIEWED:

A.7

50 OF 69

PN 7500

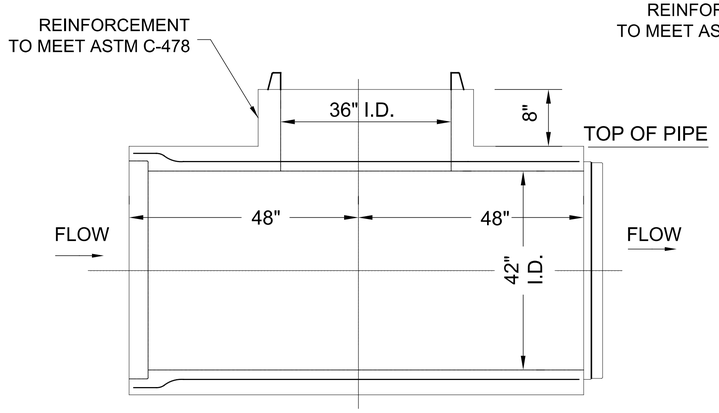

ELEVATION

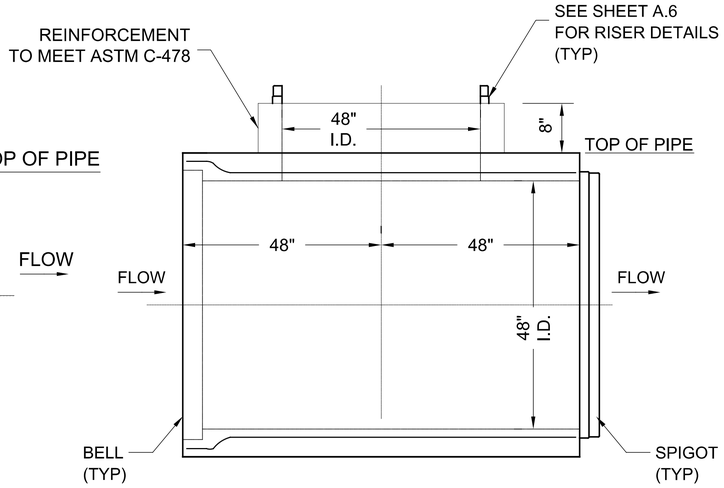

ELEVATION

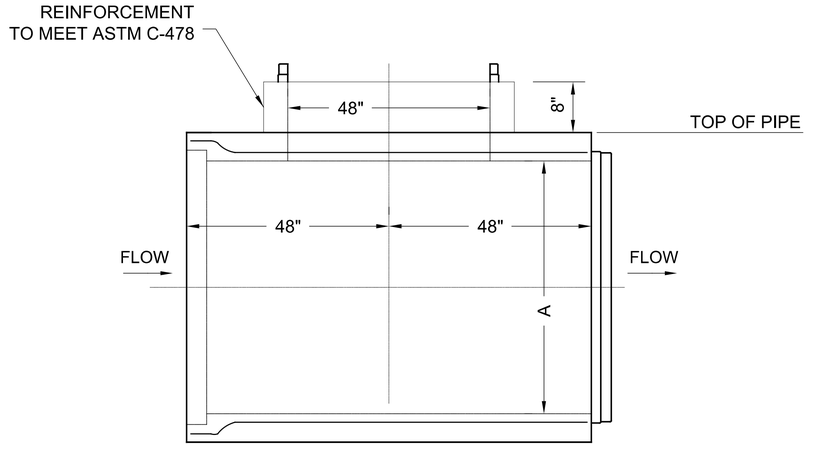

ELEVATION

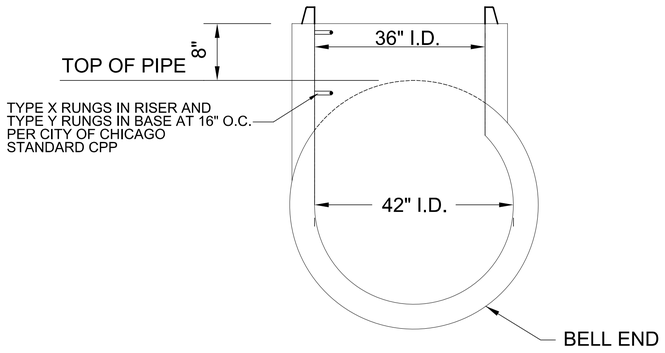

STANDARD (LEFT) RISER

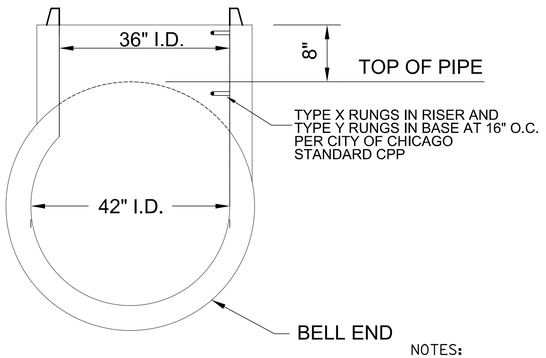

OPTIONAL (RIGHT) RISER

42" x 36" RCP BASE TEE

48" x 48" RCP BASE TEE

STANDARD (LEFT) RISER

OPTIONAL (RIGHT) RISER

≥ 54" x 48" RCP BASE TEE

DIMENSIONS OF PRECAST MANHOLE BASE			
A	B	C	RUNGS
120”	142”	11”	6
108”	128”	10”	6
96”	114”	9”	5
84”	101*”	8*”	4
78”	94*”	8*”	4
72”	87*”	7*”	4
66”	80*”	7*”	3
60”	73*”	6*”	3
54”	66*”	6*”	3
48”	59*”	5*”	3
42”	52*”	5*”	3

NOTES:

1. FOR LADDER DETAILS, SEE DETAIL SHEET A.22

2. FOR RISER DETAILS, SEE DETAIL SHEET A.6

3. ALL BASE TEES SHALL BE ASTM C76 CLASS V.

4. THE BASE TEE MUST BE COMPATIBLE WITH THE ADJOINING PIPE, AND GASKET JOINTS COMPLYING WITH ASTM C-76 AND C-443, RESPECTIVELY.

5. ALL PIPE AND FITTINGS 24 INCHES IN DIAMETER AND LARGER MUST BE CLASS III, IV AND V REINFORCED CONCRETE PIPE AS SPECIFIED IN THE SPECIFICATIONS FOR ''REINFORCED CONCRETE CULVERT STORM DRAIN, AND SEWER PIPE.'' A.S.T.M. DESIGNATION C76, TABLE III, IV AND V, WALL B OR WALL C WITH CIRCULAR OR ELLIPTICAL REINFORCEMENT

STANDARD REVISIONS	
DATE	DESCRIPTION
4/4/19	APPROVED FINAL

PERCENT COMPLETE	DATE
30	11-22-19
60 REV	04-09-20
75 REV	05-28-20
90 REV	08-05-20
100	08-21-20
BULLETIN	

CITY OF CHICAGO
DEPARTMENT OF WATER MANAGEMENT
BUREAU OF ENGINEERING SERVICES

TYPE ''A'' BASE TEE
MANHOLE BASES
42'' AND LARGER

DRAWN: SBW
DESIGNED:
CHECKED:
REVIEWED:

A.8

51 OF 69

PN 7500

$FILE$
$DATE$

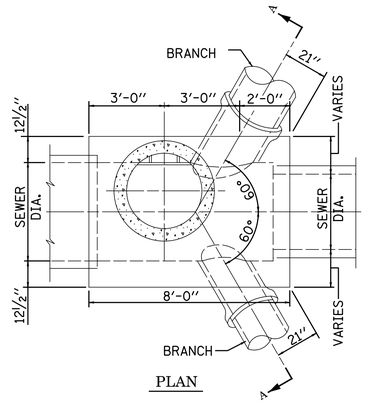

PLAN

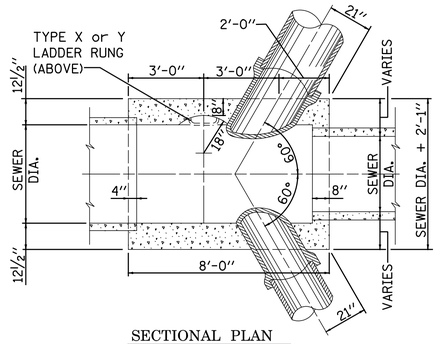

SECTIONAL PLAN

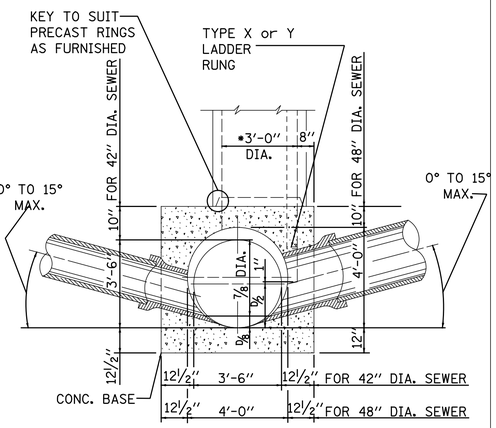

SECTION A–A

TYPE "B" MANHOLE
FOR SEWERS 48" DIA. & 42" DIA.

Not To Scale

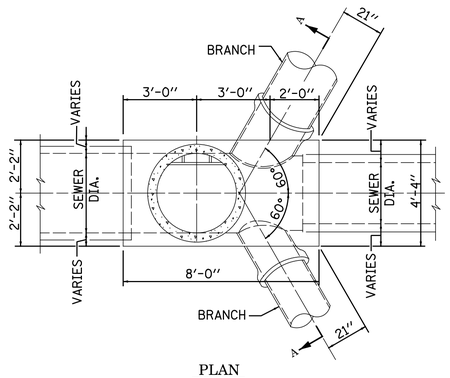

PLAN

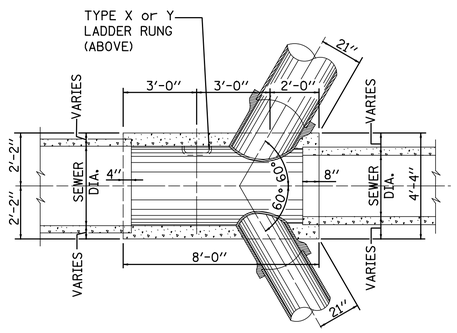

SECTIONAL PLAN

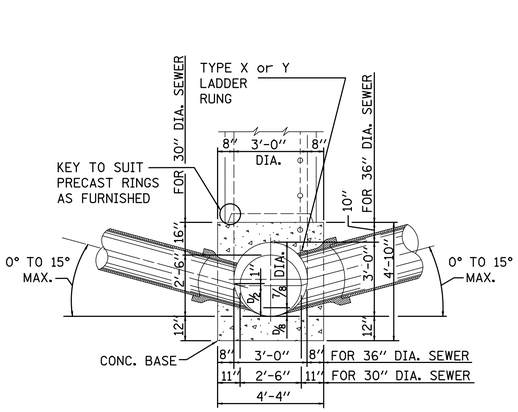

SECTION A–A

TYPE "B" MANHOLE
FOR SEWERS 36" DIA. & 30" DIA.

Not To Scale

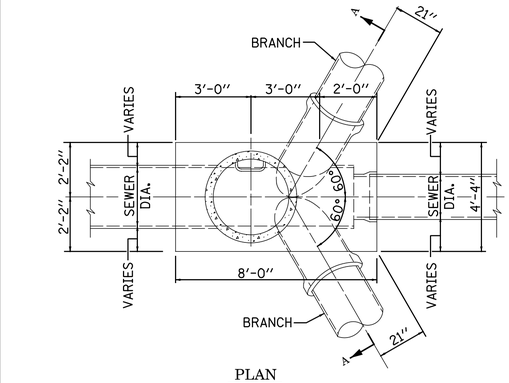

PLAN

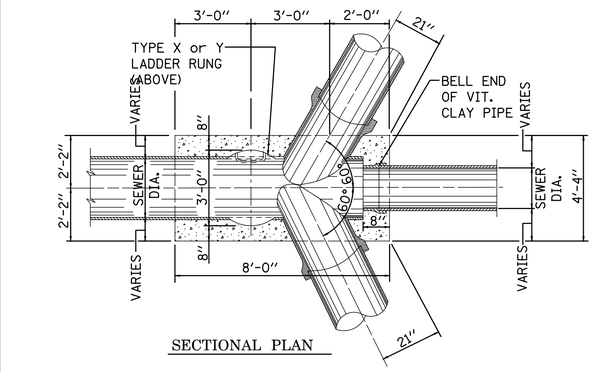

SECTIONAL PLAN

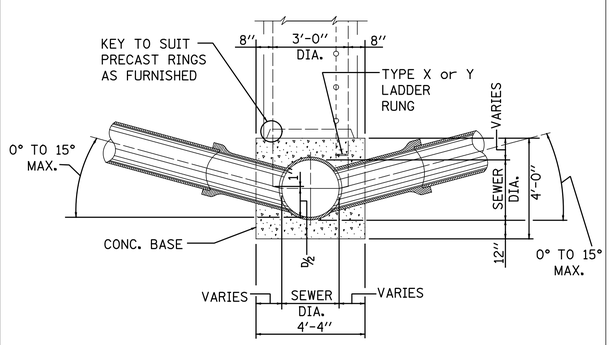

SECTION A–A

TYPE "B" MANHOLE
FOR SEWERS 24" DIA. & SMALLER

Not To Scale

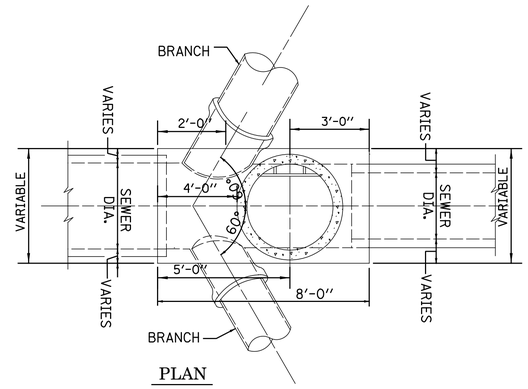

PLAN

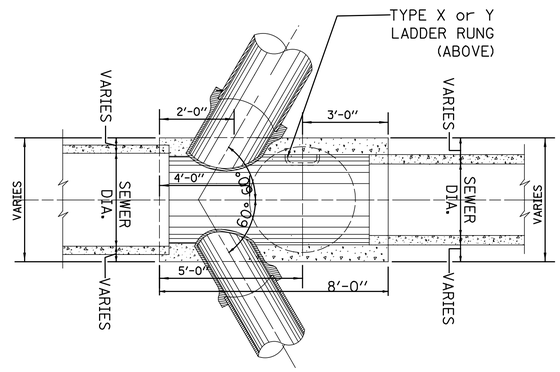

SECTIONAL PLAN

TYPICAL REVERSE TYPE "B" MANHOLE

Not To Scale

NOTES:
1. CONTRACTOR MUST SUBMIT SHOP DRAWINGS OF ALL PROPOSED MANHOLE CONFIGURATIONS FOR APPROVAL PRIOR TO SUBMISSION OF MATERIAL ORDERS.

2. CONNECTION BELLS MAY BE INSTALLED AT MANUFACTURER'S SITE, OR MORTARED IN PLACE IN THE FIELD. SEE SHEET A.11 FOR FURTHER CONFIGURATION DETAILS.

3. BASES MUST BE PRECAST WITH THE CORRECT NUMBER OF PIPE OPENINGS, CORRESPONDING TO THE REPRESENTATION IN THE PLAN AND PROFILE SHEETS.

4. PATCHING, BRICKING, OR OTHER MATERIAL METHODS OF CLOSING UNUSED HOLES WILL NOT BE ACCEPTED.

5. 6" MINIMUM GRANULAR EMBEDMENT UNDER ALL PRECAST MANHOLE BASES

6. ALL PIPE AND FITTINGS 24 INCHES IN DIAMETER AND LARGER MUST BE CLASS III, IV AND V REINFORCED CONCRETE PIPE AS SPECIFIED IN THE SPECIFICATIONS FOR "REINFORCED CONCRETE CULVERT STORM DRAIN, AND SEWER PIPE." A.S.T.M. DESIGNATION C76, TABLE III, IV AND V, WALL B OR WALL C WITH CIRCULAR OR ELLIPTICAL REINFORCEMENT

STANDARD REVISIONS	
DATE	DESCRIPTION
9/19/17	APPROVED PLAN

PERCENT COMPLETE	DATE
30	11-22-19
60 REV	04-09-20
75 REV	05-28-20
90 REV	08-05-20
100	08-21-20
BULLETIN	

CITY OF CHICAGO
DEPARTMENT OF WATER MANAGEMENT
BUREAU OF ENGINEERING SERVICES

TYPE "B" MANHOLE

DRAWN: SBW
DESIGNED:
CHECKED:
REVIEWED:

A.9

52 OF 69

PN 7500

$FILE$
$DATE$

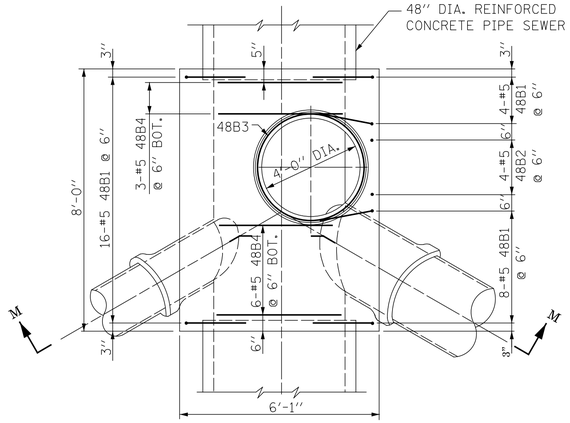

PLAN

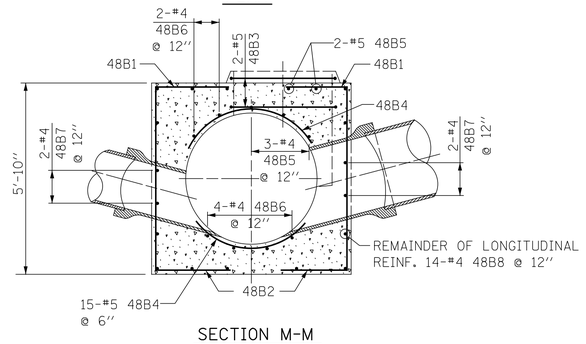

SECTION M-M

48" DIA. SEWER

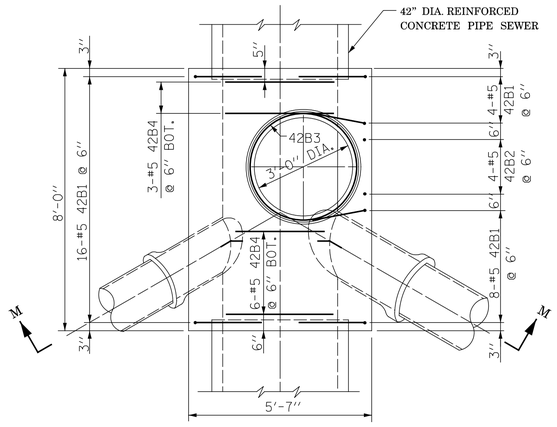

PLAN

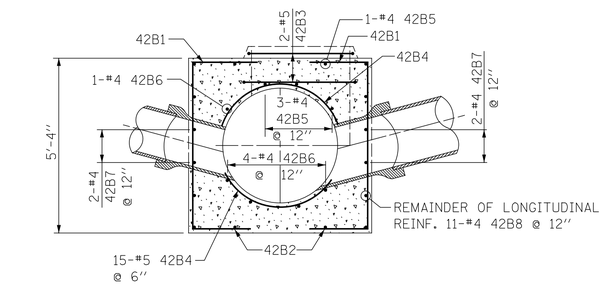

SECTION M-M

42" DIA. SEWER

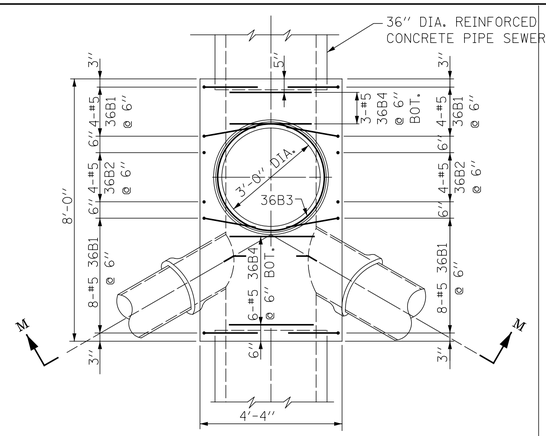

PLAN

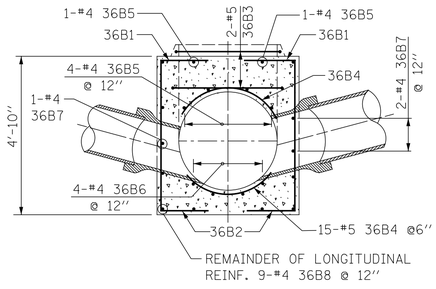

SECTION M-M

36" DIA. SEWER

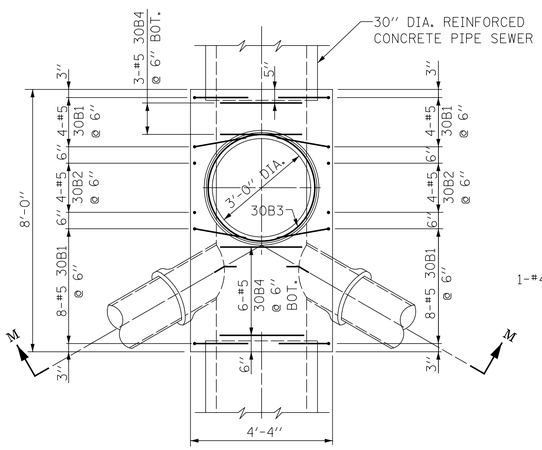

PLAN

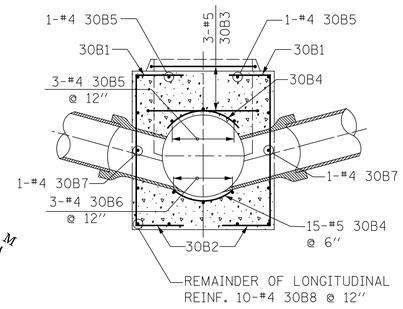

SECTION M-M

30" DIA. SEWER

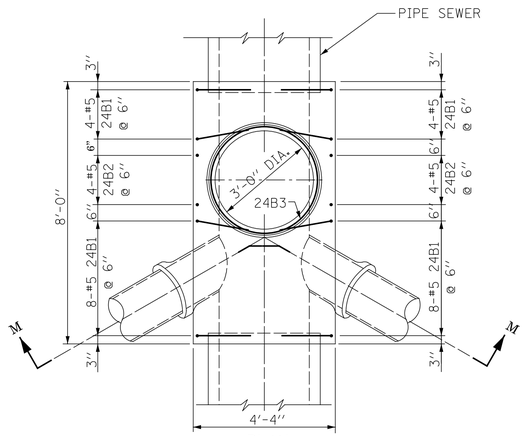

PLAN

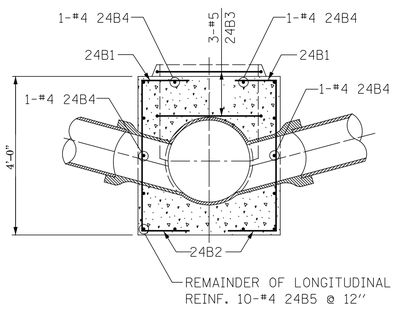

SECTION M-M

24" DIA. SEWERS & SMALLER

NOTES:
1. CONTRACTOR MUST SUBMIT SHOP DRAWINGS OF ALL PROPOSED MANHOLE CONFIGURATIONS FOR APPROVAL PRIOR TO SUBMISSION OF MATERIAL ORDERS.

2. CONNECTION BELLS MAY BE INSTALLED AT MANUFACTURER'S SITE, OR MORTARED IN PLACE IN THE FIELD. SEE SHEET A.11 FOR FURTHER CONFIGURATION DETAILS.

3. BASES MUST BE PRECAST WITH THE CORRECT NUMBER OF PIPE OPENINGS, CORRESPONDING TO THE REPRESENTATION IN THE PLAN AND PROFILE SHEETS.

4. PATCHING, BRICKING, OR OTHER MATERIAL METHODS OF CLOSING UNUSED HOLES WILL NOT BE ACCEPTED.

5. ALL PIPE AND FITTINGS 24 INCHES IN DIAMETER AND LARGER MUST BE CLASS III, IV AND V REINFORCED CONCRETE PIPE AS SPECIFIED IN THE SPECIFICATIONS FOR "REINFORCED CONCRETE CULVERT STORM DRAIN, AND SEWER PIPE." A.S.T.M. DESIGNATION C76, TABLE III, IV AND V, WALL B OR WALL C WITH CIRCULAR OR ELLIPTICAL REINFORCEMENT

STANDARD REVISIONS	
DATE	DESCRIPTION
9/19/17	revision

PERCENT COMPLETE		DATE
30		11-22-19
60	REV	04-09-20
75	REV	05-28-20
90	REV	08-05-20
100		08-21-20
BULLETIN		

CITY OF CHICAGO
DEPARTMENT OF WATER MANAGEMENT
BUREAU OF ENGINEERING SERVICES

REINFORCEMENT FOR
TYPE "B" MANHOLE BASES

DRAWN: SBW
DESIGNED:
CHECKED:
REVIEWED:

A.10

53 OF 69

PN 7500

$FILE$
$DATE$

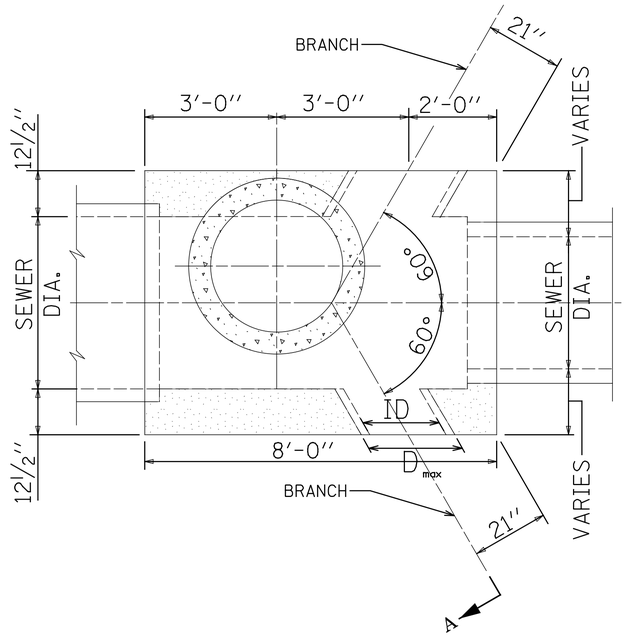

TYPICAL 4 OPENING TYPE B MANHOLE

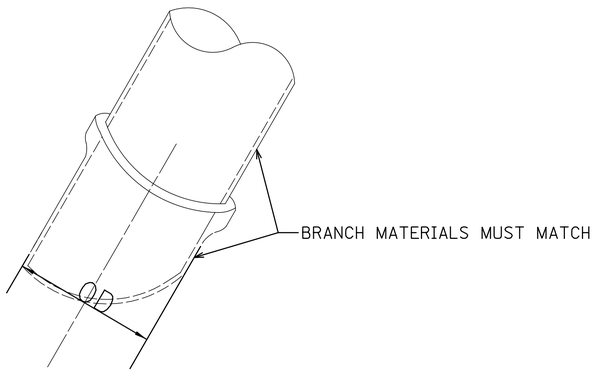

NOTES:
1. CONTRACTOR MUST SUBMIT SHOP DRAWINGS OF ALL PROPOSED MANHOLE CONFIGURATIONS FOR APPROVAL PRIOR TO SUBMISSION OF MATERIAL ORDERS.

2. CONNECTION BELLS MAY BE INSTALLED AT MANUFACTURER'S SITE, OR MORTARED IN PLACE IN THE FIELD.

3. BASES MUST BE PRECAST WITH THE CORRECT NUMBER OF PIPE OPENINGS, CORRESPONDING TO THE REPRESENTATION IN THE PLAN AND PROFILE SHEETS.

4. PATCHING, BRICKING, OR OTHER MATERIAL METHODS OF CLOSING UNUSED HOLES WILL NOT BE ACCEPTED.

5. ALL PIPE AND FITTINGS 24 INCHES IN DIAMETER AND LARGER MUST BE CLASS III, IV AND V REINFORCED CONCRETE PIPE AS SPECIFIED IN THE SPECIFICATIONS FOR "REINFORCED CONCRETE CULVERT STORM DRAIN, AND SEWER PIPE." A.S.T.M. DESIGNATION C76, TABLE III, IV AND V, WALL B OR WALL C WITH CIRCULAR OR ELLIPTICAL REINFORCEMENT

BRANCH SIZING CHART

ID PIPE (in.)	MATERIAL	OD PIPE (in.)	D max* (in.)
12	VCP	14.36	18.36
15	VCP	17.8	21.8
18	VCP	21.48	25.48
21	VCP	25.54	31.54
8	DIP	9.05	13.05
10	DIP	11.1	15.1
12	DIP	13.2	17.2
14	DIP	15.3	19.3
16	DIP	17.4	21.4
18	DIP	19.5	23.5
20	DIP	21.6	25.6
24	DIP	25.8	29.8
24	RCP III (Wall B)	30	34
27	RCP III (Wall B)	33.5	37.5
30	RCP III (Wall B)	37	41
33	RCP III (Wall B)	40.5	44.5
36	RCP III (Wall B)	44	48
42	RCP III (Wall B)	51	55
48	RCP III (Wall B)	58	62
Notes:			
1. If the pipe class and wall size is not shown on this table, then D max =OD pipe + 4"			
*2. Dmax indicates the maximum size of branch opening to be cast or cut into structure.			

STANDARD REVISIONS	
DATE	DESCRIPTION
9/19/17	APPROVED PLAN

PERCENT COMPLETE	DATE
30	11-22-19
60 REV	04-09-20
75 REV	05-28-20
90 REV	08-05-20
100	08-21-20
BULLETIN	

CITY OF CHICAGO
DEPARTMENT OF WATER MANAGEMENT
BUREAU OF ENGINEERING SERVICES

TYPE "B" MANHOLE CONFIGURATIONS

DRAWN: SBW
DESIGNED:
CHECKED:
REVIEWED:

A.11

PN 7500

$FILE$
$DATE$

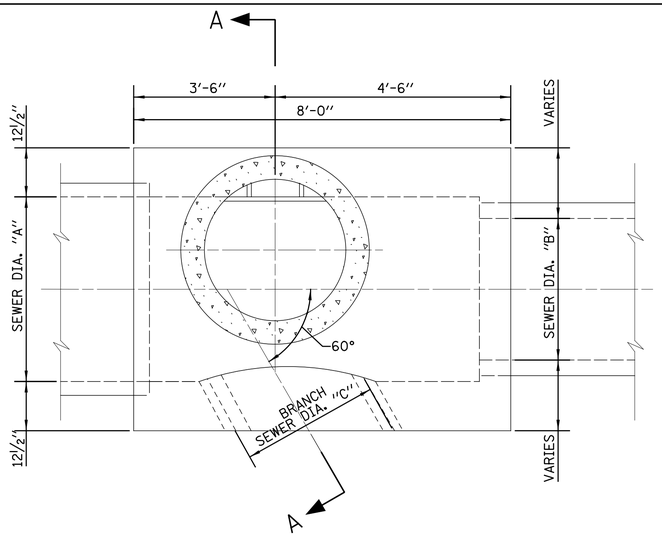

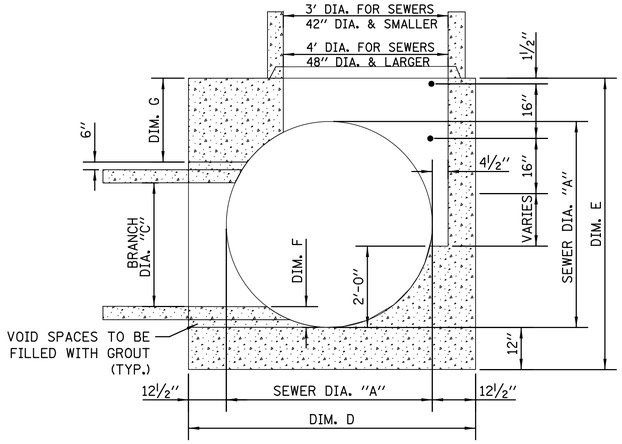

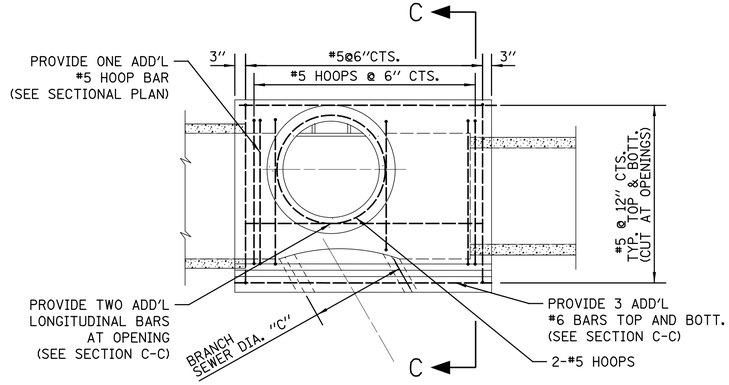

PLAN

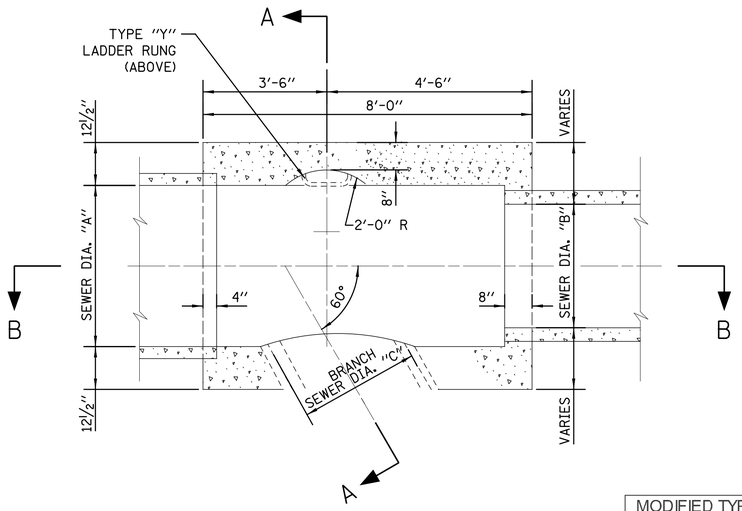

SECTION A-A

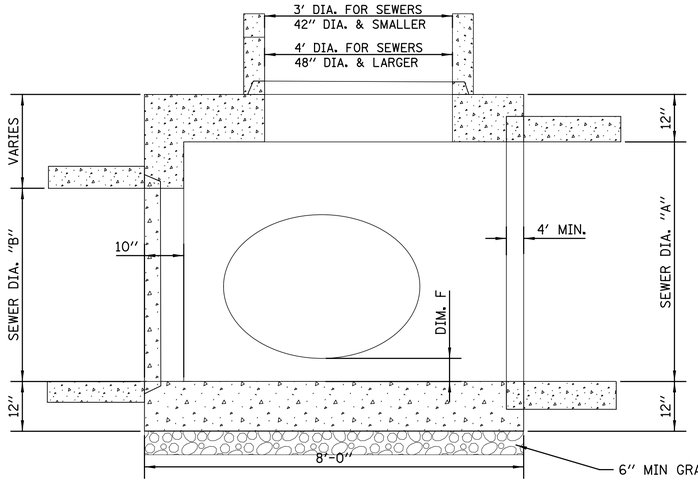

SECTION B-B

PLAN

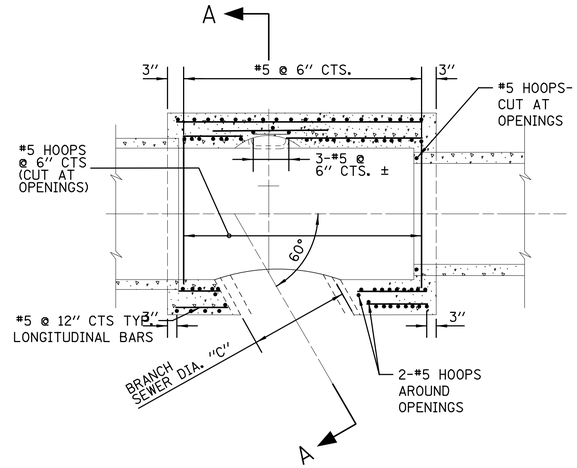

SECTIONAL PLAN

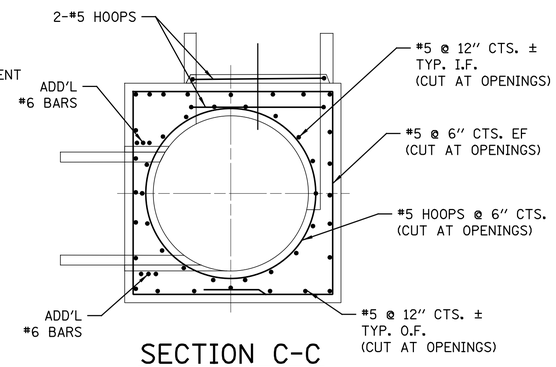

SECTION C-C

SECTIONAL PLAN

NOTES:
1. CONTRACTOR MUST SUBMIT SHOP DRAWINGS OF ALL PROPOSED MANHOLE CONFIGURATIONS FOR APPROVAL PRIOR TO SUBMISSION OF MATERIAL ORDERS.

2. CONNECTION BELLS MAY BE INSTALLED AT MANUFACTURER'S SITE, OR MORTARED IN PLACE IN THE FIELD. SEE SHEET A.11 FOR FURTHER CONFIGURATION DETAILS.

3. BASES MUST BE PRECAST WITH THE CORRECT NUMBER OF PIPE OPENINGS, CORRESPONDING TO THE REPRESENTATION IN THE PLAN AND PROFILE SHEETS.

4. PATCHING, BRICKING, OR OTHER MATERIAL METHODS OF CLOSING UNUSED HOLES WILL NOT BE ACCEPTED.

5. 6″ MINIMUM GRANULAR EMBEDMENT UNDER ALL PRECAST MANHOLE BASES

6. ALL PIPE AND FITTINGS 24 INCHES IN DIAMETER AND LARGER MUST BE CLASS III, IV AND V REINFORCED CONCRETE PIPE AS SPECIFIED IN THE SPECIFICATIONS FOR "REINFORCED CONCRETE CULVERT STORM DRAIN, AND SEWER PIPE." A.S.T.M. DESIGNATION C76, TABLE III, IV AND V, WALL B OR WALL C WITH CIRCULAR OR ELLIPTICAL REINFORCEMENT

MODIFIED TYPE B MANHOLES FOR 42", 36", & 30" BRANCHES						
SEWER SIZE		BRANCH SIZE	DIMENSION			
A	B	C	D	E	F	G
60	60	42	85	84	6	18
60	60	36	85	84	6	24
60	60	30	85	84	6	30
54	54	42	79	78	6	12
54	54	36	79	78	6	18
54	54	30	79	78	6	24
48	48	42	73	78	6	12
48	48	36	73	72	6	12
48	48	30	73	72	6	18
42	42	36	67	72	6	12
42	42	30	67	66	6	12
36	36	36	58	66	6	12
36	36	30	58	66	6	12
30	30	30	55	66	6	12

ALL MEASUREMENTS ARE IN INCHES

NOTE: WHEN B IS SMALLER THAN A, GAP SHALL BE FILLED WITH CONCRETE DURING CASTING.

SIMILAR REBAR DESIGN SHALL BE USE.

STANDARD REVISIONS	
DATE	DESCRIPTION
3/7/19	REVISED

PERCENT COMPLETE		DATE
30		11-22-19
60	REV	04-09-20
75	REV	05-28-20
90	REV	08-05-20
100		08-21-20
BULLETIN		

CITY OF CHICAGO
DEPARTMENT OF WATER MANAGEMENT
BUREAU OF ENGINEERING SERVICES

MODIFIED TYPE "B" MANHOLE

DRAWN: SBW
DESIGNED:
CHECKED: CD, GC, SO
REVIEWED:

A.12

54 OF 69

PN 7500

$FILE$
$DATE$

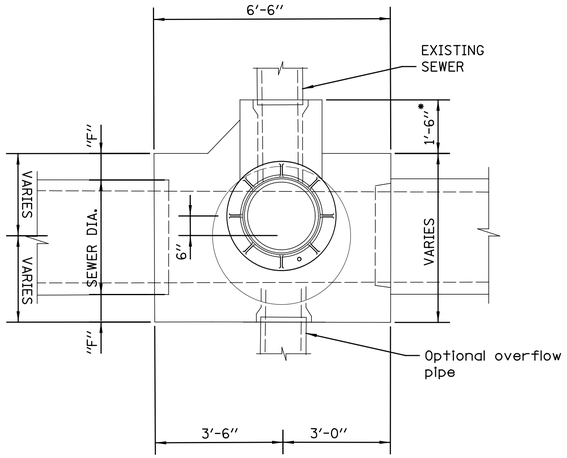

PLAN

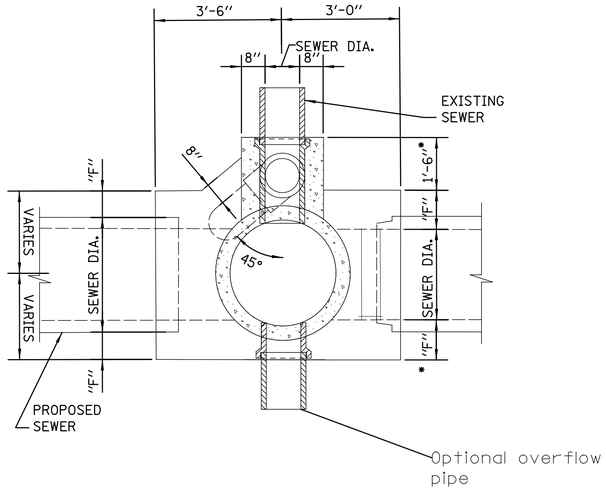

SECTIONAL PLAN

* 1′-8″ FOR 24″ DIA. SEWERS

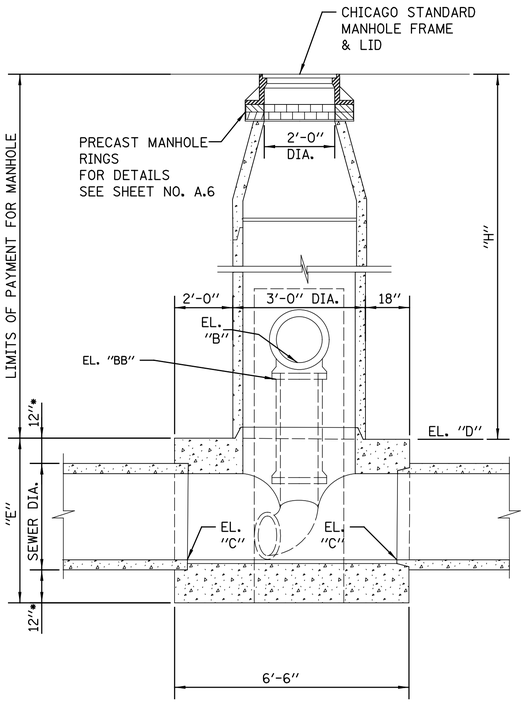

SECTION A-A

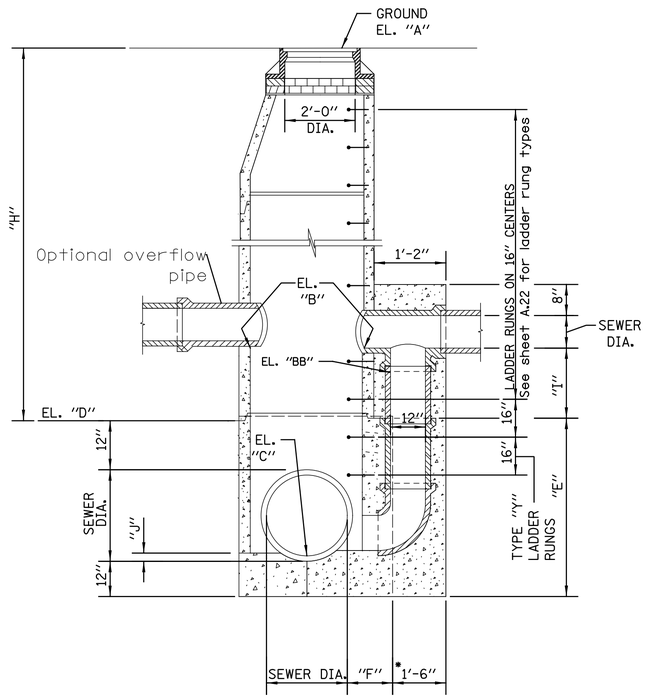

SECTION B-B

NOTE:
1. UNLESS OTHERWISE NOTED ALL PIPE AND FITTINGS 21″ AND UNDER ARE STANDARD STRENGTH VCP.

2. FOR DESIGN ONLY- USE 12″ DROP PIPE FOR THE FOLLOWING DEPTHS OF DWF:
6″ DWF-42″ LATERAL
7″ DWF-36″ LATERAL
8″ DWF-< 24″ LATERAL

3. ALL PIPE AND FITTINGS 24 INCHES IN DIAMETER AND LARGER MUST BE CLASS III, IV AND V REINFORCED CONCRETE PIPE AS SPECIFIED IN THE SPECIFICATIONS FOR "REINFORCED CONCRETE CULVERT STORM DRAIN, AND SEWER PIPE." A.S.T.M. DESIGNATION C76, TABLE III, IV AND V, WALL B OR WALL C WITH CIRCULAR OR ELLIPTICAL REINFORCEMENT

LOCATION	SHEET NO.	ELEVATION				
		"A"	"B"	"BB"	"C"	"D"
58TH ST & NARRAGANSETT AV	11 & 14	+35.0±	+27.0±		+19.07	+23.95

NOTE: Elevation BB >= Elevation D

STANDARD REVISIONS	
DATE	DESCRIPTION
9/19/17	APPROVED

PERCENT COMPLETE	DATE
30	11-22-19
60 REV	04-09-20
75 REV	05-28-20
90 REV	08-05-20
100	08-21-20
BULLETIN	

CITY OF CHICAGO
DEPARTMENT OF WATER MANAGEMENT
BUREAU OF ENGINEERING SERVICES

TYPE C
SINGLE DROP MANHOLE

DRAWN: SBW
DESIGNED:
CHECKED:
REVIEWED:

A.14

56 OF 69

PN 7500

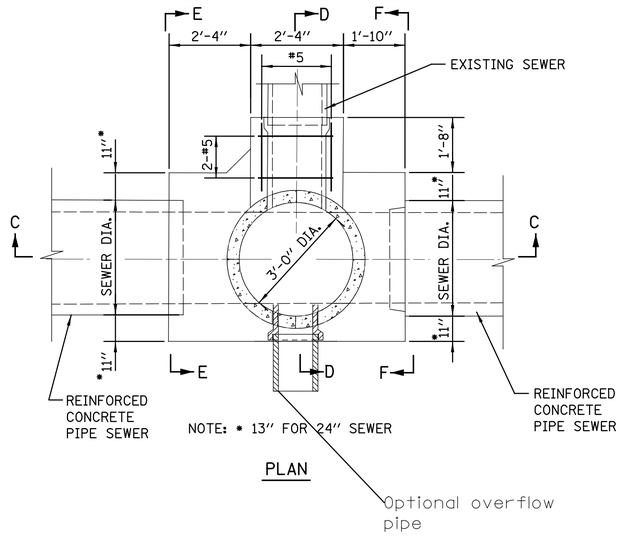

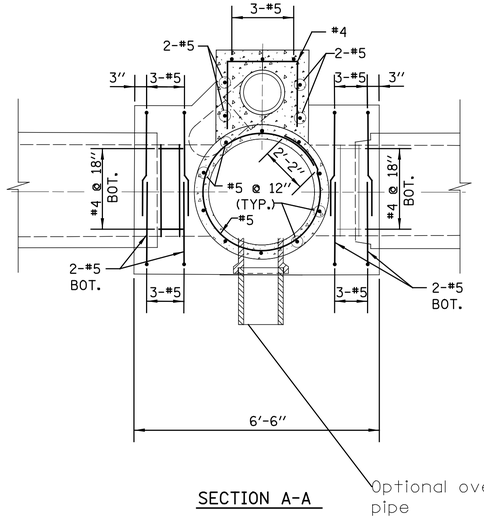

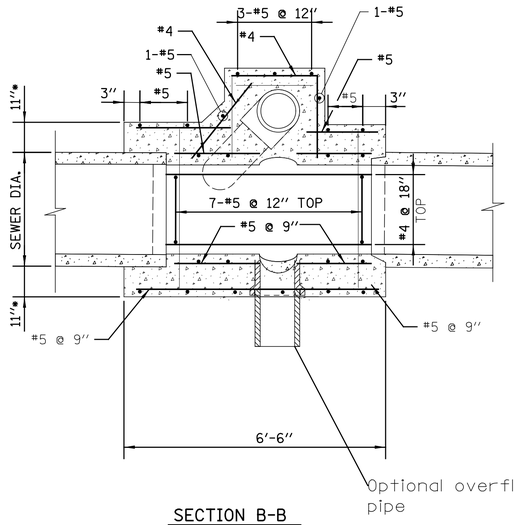

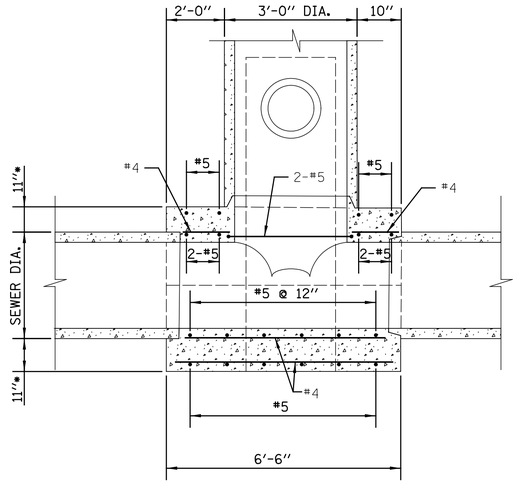

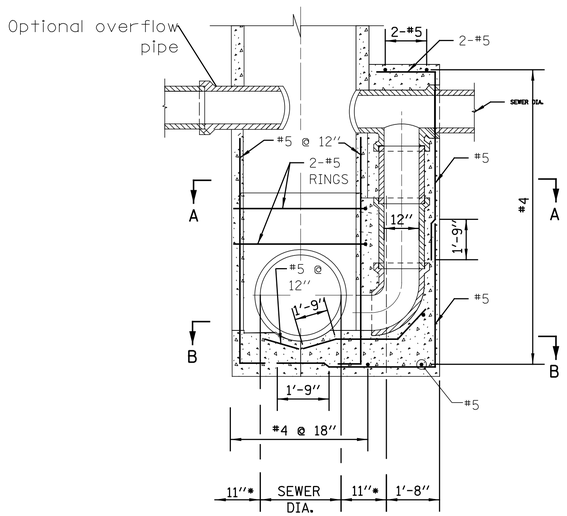

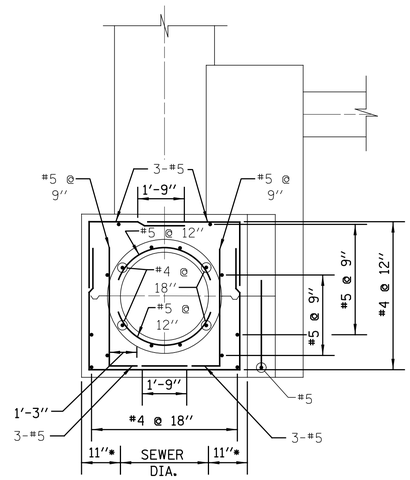

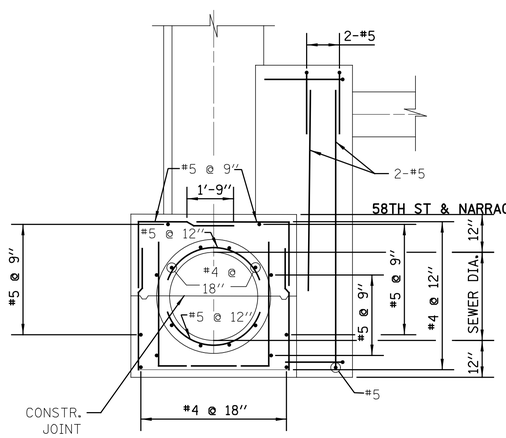

58TH ST & NARRAGANSETT AV 11 & 14 +35.0± +27.0± +19.07 +23.95

Note: For Design only- Use 12" Drop pipe for the following depths of DWF:
6" DWF-42" lateral
7" DWF-36" lateral
8" DWF≤ 24" lateral

FOR CONCRETE PIPE SEWERS
24" DIA. TO 48" DIA.

STANDARD REVISIONS	
DATE	DESCRIPTION
10/21/16	APPROVED

PERCENT COMPLETE	DATE
30	11-22-19
60 REV	04-09-20
75 REV	05-28-20
90 REV	08-05-20
100	08-21-20
BULLETIN	

CITY OF CHICAGO
DEPARTMENT OF WATER MANAGEMENT
BUREAU OF ENGINEERING SERVICES

BASES FOR TYPE C
SINGLE DROP MANHOLE

DRAWN: SBW
DESIGNED:
CHECKED:
REVIEWED:

A.15

57 OF 69

PN 7500

$FILE$
$DATE$

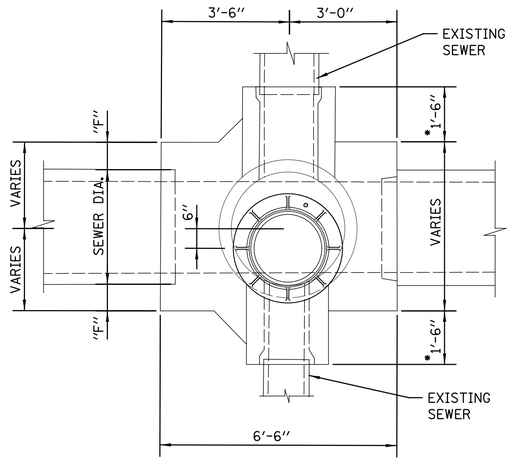

PLAN

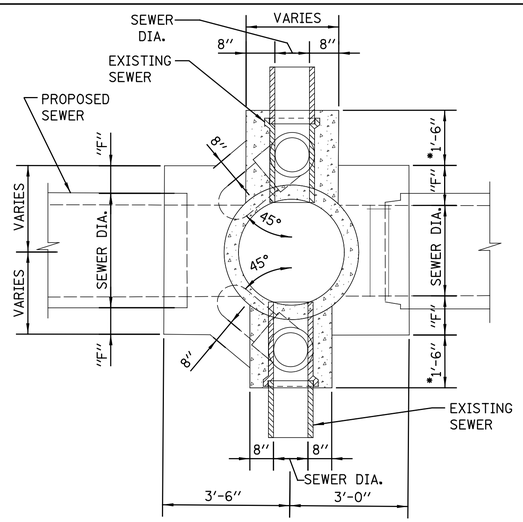

SECTIONAL PLAN

* 1'-8" FOR 24" DIA. SEWERS

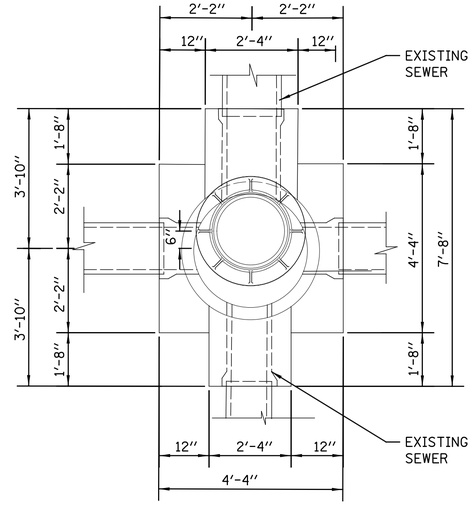

PLAN

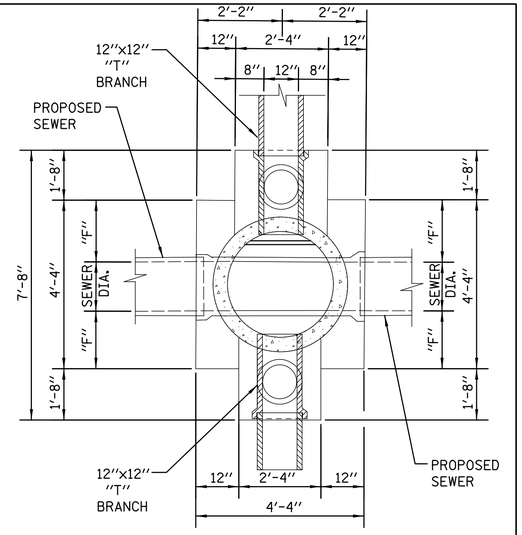

SECTIONAL PLAN

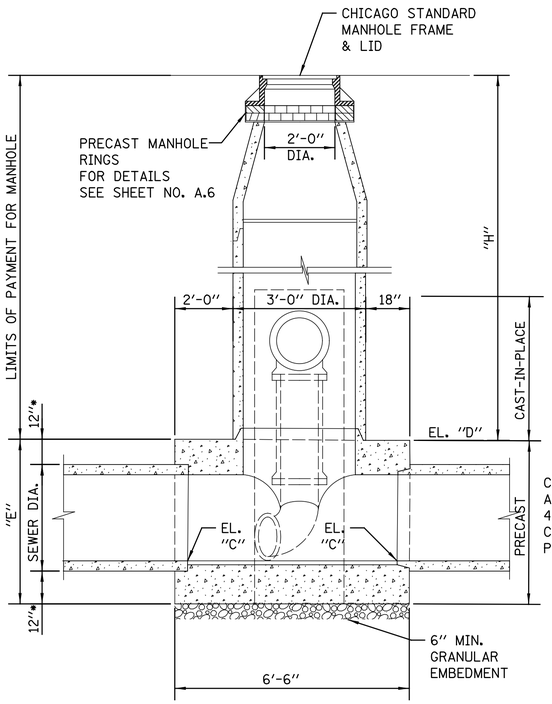

SECTION A-A

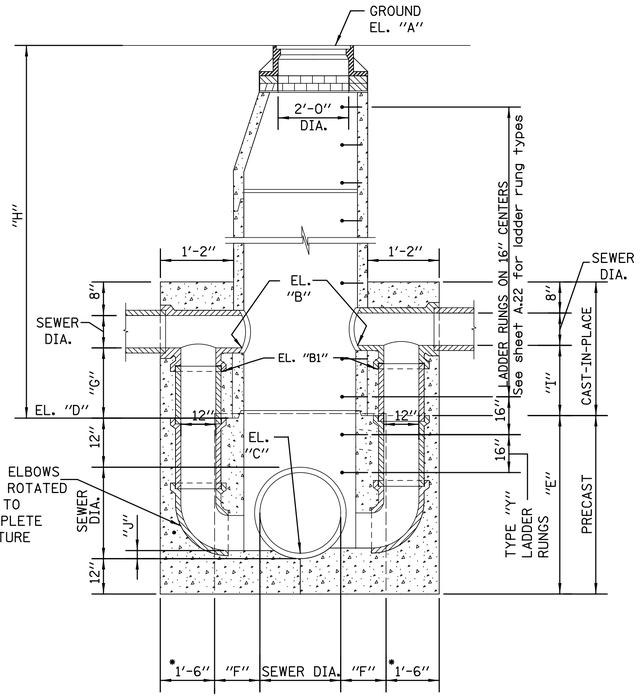

SECTION B-B

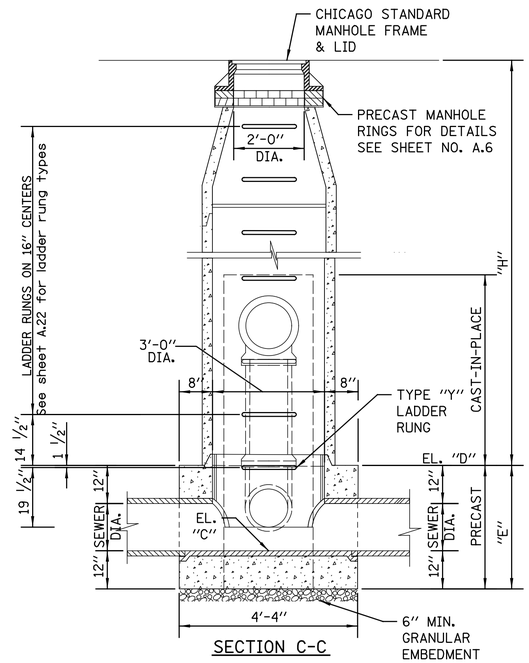

SECTION C-C

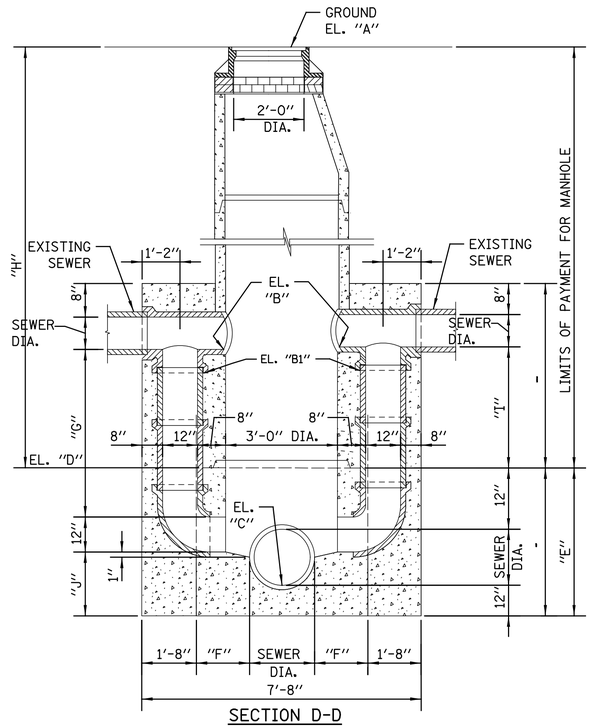

SECTION D-D

FOR CONCRETE PIPE SEWERS
24" DIA. TO 48" DIA.

NOTE: Elevation B1 >= Elevation D

LOCATION	SHEET NO.	ITEM NO.	ELEVATION					DIMENSIONS					
			"A"	"B"	"B1"	"C"	"D"	"E"	"F"	"G"	"H"	"I"	"J"
58TH ST & MULLIGAN AV	10		+34.6±	+27.1±		+18.68	+23.56	6.25'		3.54'	11.04'	3.54'	4.5"

NOTE:
1. UNLESS OTHERWISE NOTED ALL PIPE AND FITTINGS 21" AND UNDER ARE STANDARD STRENGTH VCP.

2. FOR DESIGN ONLY- USE 12" DROP PIPE FOR THE FOLLOWING DEPTHS OF DWF:
6" DWF-42" LATERAL
7" DWF-36" LATERAL
8" DWF-< 24" LATERAL

3. ALL PIPE AND FITTINGS 24 INCHES IN DIAMETER AND LARGER MUST BE CLASS III, IV AND V REINFORCED CONCRETE PIPE AS SPECIFIED IN THE SPECIFICATIONS FOR "REINFORCED CONCRETE CULVERT STORM DRAIN, AND SEWER PIPE." A.S.T.M. DESIGNATION C76, TABLE III, IV AND V, WALL B OR WALL C WITH CIRCULAR OR ELLIPTICAL REINFORCEMENT

STANDARD REVISIONS	
DATE	DESCRIPTION
9/19/17	APPROVED

FOR VITRIFIED CLAY PIPE SEWERS
21" DIA. & SMALLER

PERCENT COMPLETE	DATE
30	11-22-19
60 REV	04-09-20
75 REV	05-28-20
90 REV	08-05-20
100	08-21-20
BULLETIN	

CITY OF CHICAGO
DEPARTMENT OF WATER MANAGEMENT
BUREAU OF ENGINEERING SERVICES

TYPE C
DOUBLE DROP MANHOLE

DRAWN: SBW
DESIGNED:
CHECKED:
REVIEWED:

A.16

58 OF 69

PN 7500

$FILE$
$DATE$

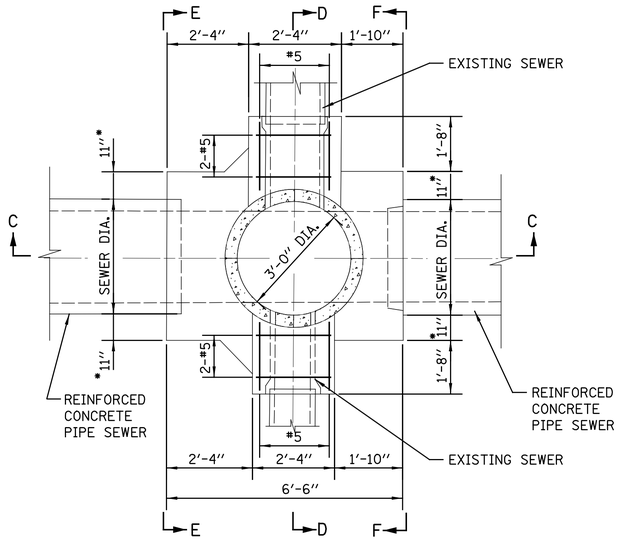

NOTE: * 13" FOR 24" SEWER

PLAN

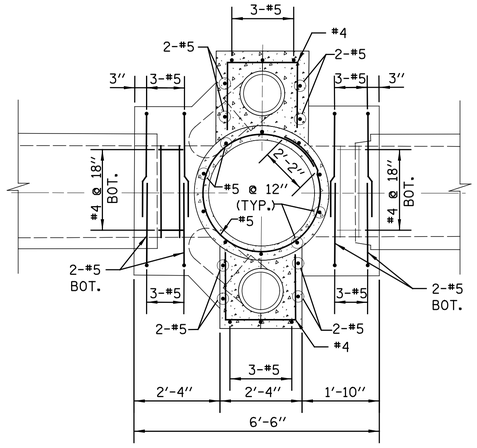

SECTION A-A

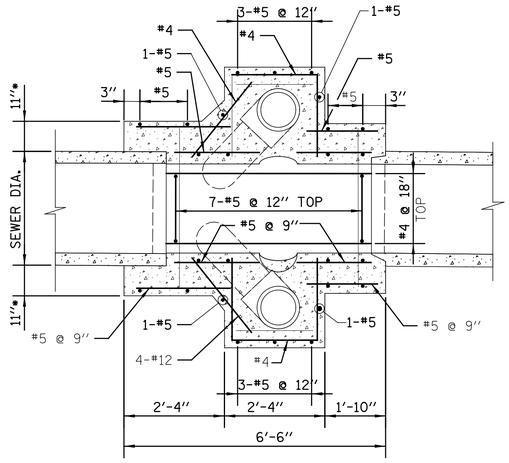

SECTION B-B

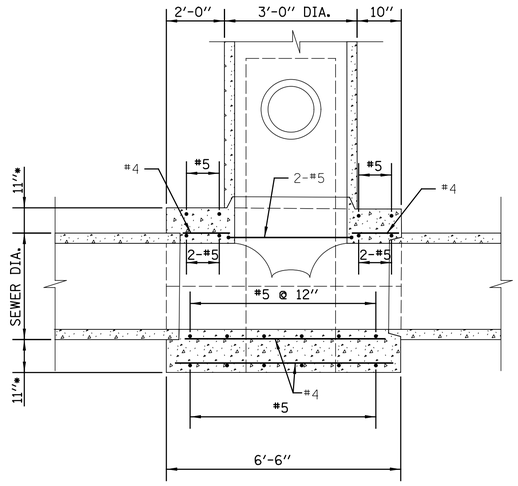

SECTION C-C

SECTION D-D

ELEVATION E-E

ELEVATION F-F

FOR CONCRETE PIPE SEWERS
24" DIA. TO 48" DIA.

NOTE: FOR DESIGN ONLY- USE 12" DROP PIPE
FOR THE FOLLOWING DEPTHS OF DWF:
6" DWF-42" LATERAL
7" DWF-36" LATERAL
8" DWF-< 24" LATERAL

STANDARD REVISIONS	
DATE	DESCRIPTION
9/19/17	APPROVED

PERCENT COMPLETE		DATE
30		11-22-19
60	REV	04-09-20
75	REV	05-28-20
90	REV	08-05-20
100		08-21-20
BULLETIN		

CITY OF CHICAGO
DEPARTMENT OF WATER MANAGEMENT
BUREAU OF ENGINEERING SERVICES

BASES FOR TYPE C
DOUBLE DROP MANHOLE

DRAWN: SBW
DESIGNED:
CHECKED:
REVIEWED:

A.17

59 OF 69

PN 7500

$FILE$
$DATE$

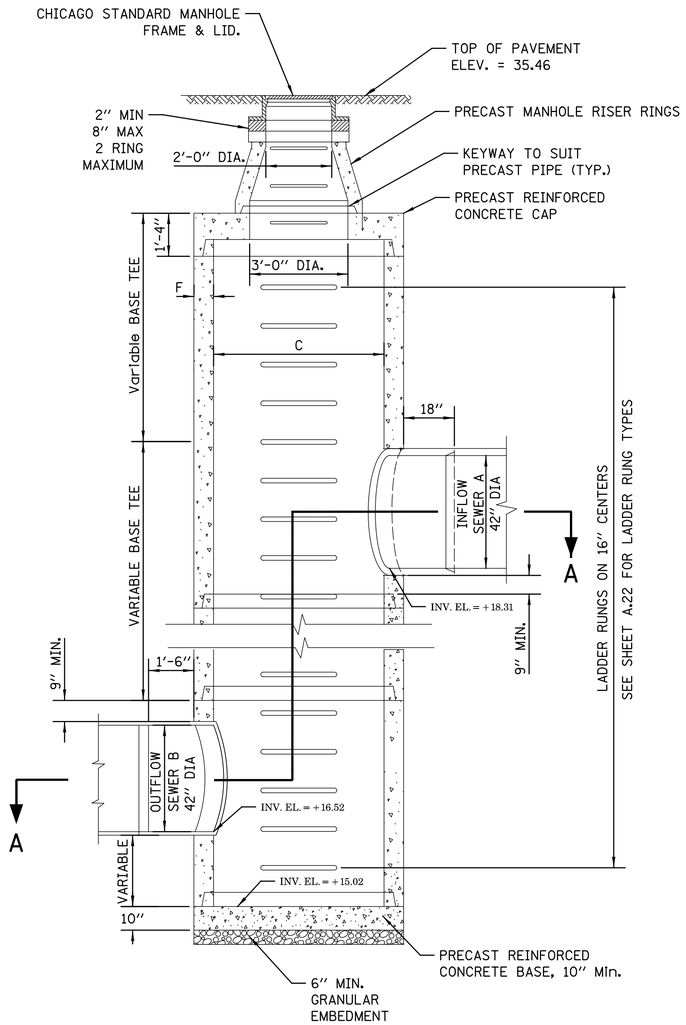

SECTION B-B
SCALE: N.T.S.

PRECAST COMPONENT TABLE							
BASE TEE				WALL THICKNESS	CAP & BASE		LADDER RUNG LENGTH
A	B	C*	D	F	C	E	G
60	60	84	12	8	84	48	48.5
54	54	84	12	7 1/2	78	42	46.5
48	48	72	12	7	72	36	44
42	42	60	9	6	60	24	40
36	36	60	12	6	60	24	40
30	30	48	9	5	48	12	35
24	24	48	12	5	48	12	35
NOTE: ALL MEASUREMENTS ARE IN INCHES							
*DIAMETERS >84" UP TO 144" ARE AVAILABLE IN 1' INCREMENTS							

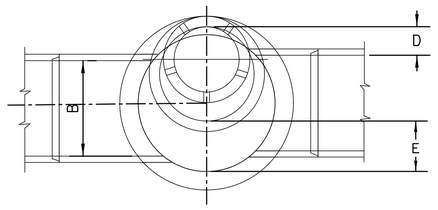

PLAN

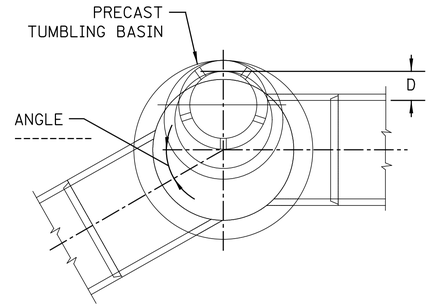

PLAN

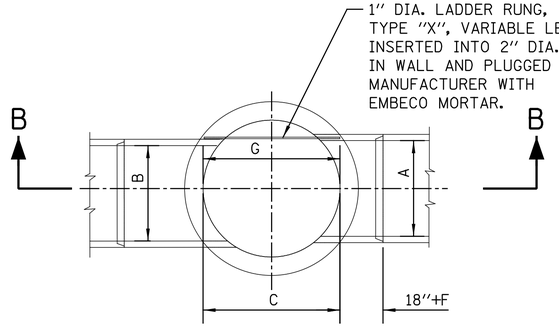

SECTIONAL PLAN A-A

OPTION: W/O BEND

SCALE: N.T.S.

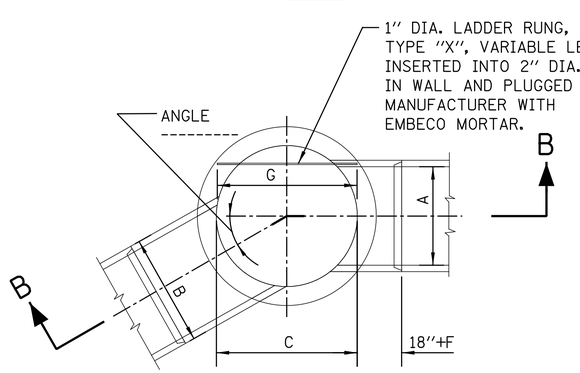

SECTIONAL PLAN A-A

OPTION: WITH BEND

SCALE: N.T.S.

NOTES:

1. FOR CONTRACTOR'S RESPONSIBILITY REGARDING STRUCTURAL DRAWING, SEE SPECIFICATIONS, BOOK 3.

2. ALL PIPE AND FITTINGS 24 INCHES IN DIAMETER AND LARGER MUST BE CLASS III, IV AND V REINFORCED CONCRETE PIPE AS SPECIFIED IN THE SPECIFICATIONS FOR "REINFORCED CONCRETE CULVERT STORM DRAIN, AND SEWER PIPE." A.S.T.M. DESIGNATION C76, TABLE III, IV AND V, WALL B OR WALL C WITH CIRCULAR OR ELLIPTICAL REINFORCEMENT;

3. FOR ADDITIONAL INFORMATION, SEE SPECIFICATIONS, BOOK 3.

STANDARD REVISIONS	
DATE	DESCRIPTION
9/19/17	Approved Plan

PERCENT COMPLETE		DATE
30		11-22-19
60	REV	04-09-20
75	REV	05-28-20
90	REV	08-05-20
100		08-21-20
BULLETIN		

CITY OF CHICAGO
DEPARTMENT OF WATER MANAGEMENT
BUREAU OF ENGINEERING SERVICES

PRECAST
TUMBLING BASIN DETAIL
W 58TH ST & S MOBILE AV

DRAWN: SBW
DESIGNED:
CHECKED:
REVIEWED:

A.18

60 OF 69

PN 7500

$FILE$
$DATE$

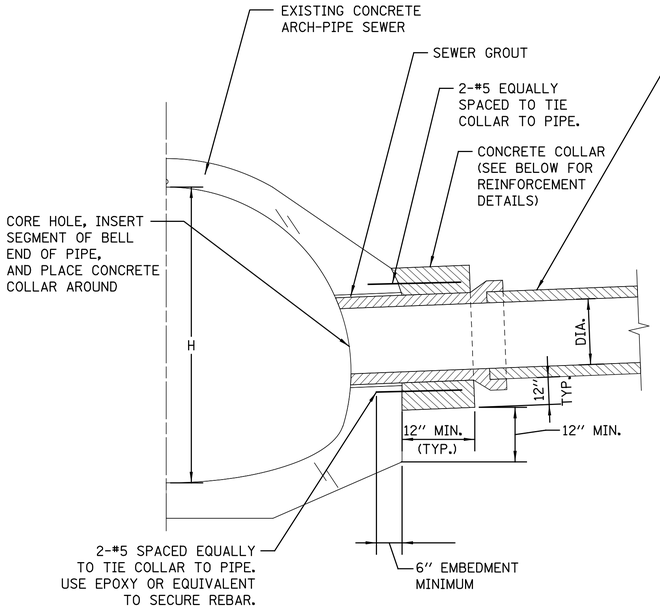

EXAMPLE TYPICAL CONNECTION DETAIL

(NOT TO SCALE)

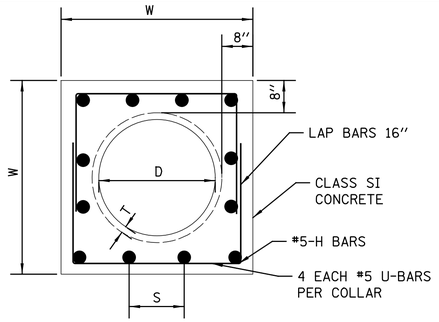

SECTION
(SAME DIAMETERS)

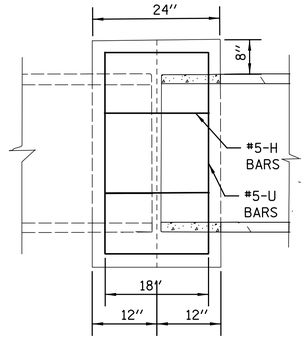

PLAN
(SAME DIAMETERS)

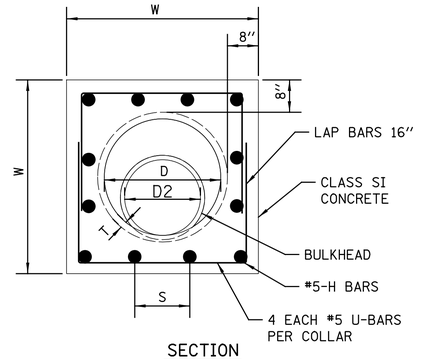

SECTION
(DIFFERENT DIAMETERS)

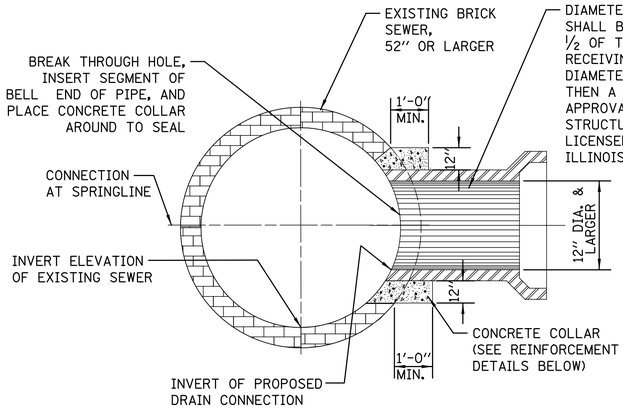

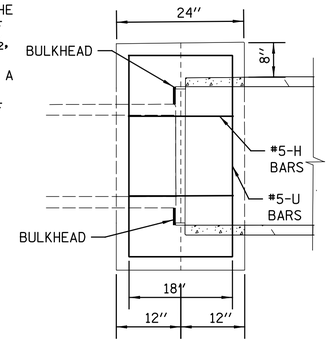

PLAN
(DIFFERENT DIAMETERS)

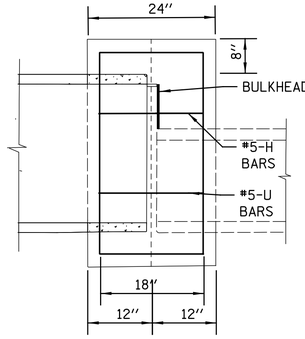

PROFILE
(DIFFERENT DIAMETERS)

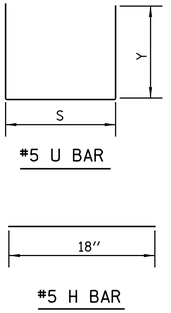

#5 U BAR

#5 H BAR

CONRETE COLLAR NOTES:

1. ALL ITEMS AND MATERIALS SHALL CONFORM TO THE LATEST IDOT SSRBC SPECIFICATIONS, UNLESS OTHERWISE NOTED IN SUPPLEMENTAL SPECIFICATIONS FOR THE SPECIFIC PROJECT BEING CONSTRUCTED.

2. ALL CONCRETE SHALL CONFORM TO IDOT SSRBC ARTICLE 1020.04, CLASS SI, WITH A COMPRESSIVE STRENGTH OF 3500 PSI.

3. ALL EPOXY COATED REINFORCEMENT BARS SHALL CONFORM TO IDOT SSRBC SECTION 508, AND ARTICLE 1006.10.

4. UNLESS OTHERWISE SHOWN, THE COVER FOR REINFORCING STEEL SHALL BE AS FOLLOWS: A.) CONCRETE CAST AGAINST PERMANENTLY EXPOSE EARTH: 3" B.) ALL OTHER REINFORCING BARS: 2"

5. CONCRETE COLLARS SHALL BE USED AT ALL EXISTING/PROPOSED PIPE CONNECTIONS. TRIM EXISTING PIPE END TO PROVIDE FLUSH BUTT JOINT, INSTALL REBAR, AND PLACE CONCRETE COLLAR.

6. THE CONTRACTOR SHALL PROVIDE ALL MEASURES AND PRECAUTIONS NECESSARY TO PREVENT DAMAGE TO THE EXISTING SEWER DURING CONSTRUCTION. CONTRACTOR SHALL ADEQUATELY BRACE OR SHORE EXISTING SEWER IF REQUIRED TO MAINTAIN INTEGRITY OF SEWER DURING CONSTRUCTION. SUBMIT DESIGN AND DETAILS, SEALED AND SIGNED BY AN ILLINOIS LICENSED STRUCTURAL ENGINEER, SHOWING TEMPORARY BRACING FOR THE EXISTING SEWER DURING CONSTRUCTION FOR REVIEW PRIOR TO CONSTRUCTION. ANY DAMAGE TO EXISTING STRUCTURE IS RESPONSIBILITY OF THE CONTRACTOR.

7. CONTRACTOR SHALL DIVERT ALL FLOW FROM THE EXISTING SEWER PRIOR TO CONSTRUCTION SO THAT THE WORK CAN BE PERFORMED IN THE DRY CONDITION. SEWER MUST BE MAINTAINED IN SERVICE AT ALL TIMES. SUBMIT MEANS OF FLOW DIVERSION FOR REVIEW PRIOR BREAKING INTO EXISTING BRICK SEWER. ALL EXCAVATION SHALL BE KEPT DEWATERED DURING CONSTRUCTION OPERATIONS UNTIL BACKFILL IN PLACE. PROVISIONS SHALL BE MADE TO PREVENT THE BOTTOM OF ALL EXCAVATIONS FROM FREEZING OR FLOODING AT ALL TIMES. PLAN DIMENSIONS AND DETAILS RELATIVE TO EXISTING STRUCTURE SHALL BE SUBJECT TO NOMINAL CONSTRUCTION VARIATIONS. IT SHALL BE CONTRACTOR'S RESPONSIBILITY TO VERIFY SUCH DIMENSIONS AND DETAILS IN THE FIELD AND MAKE NECESSARY APPROVED ADJUSTMENTS PRIOR TO CONSTRUCTION OR ORDERING MATERIALS. SUCH VARIATIONS SHALL NOT BE CAUSE FOR ADDITIONAL COMPENSATION FOR A CHANGE IN THE SCOPE OF THE WORK, HOWEVER, CONTRACTOR WILL BE PAID FOR THE QUANTITY ACTUALLY FURNISHED AT THE UNIT PRICE OF THE WORK.

EXAMPLE TYPICAL BRICK SEWER CONNECTION FOR CONNECTING PIPE SIZES GREATER THAN 12" DIA.

(NOT TO SCALE)

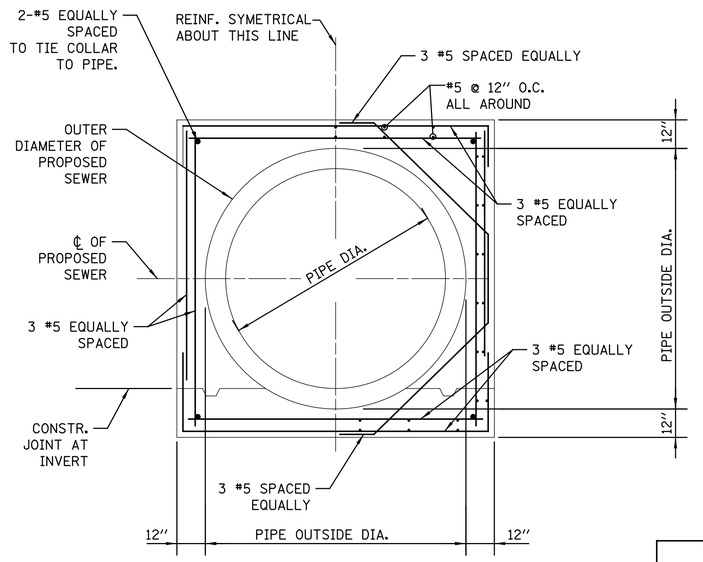

EXAMPLE CONCRETE COLLAR REINFORCEMENT - SECTION

(NOT TO SCALE)

NOTES

1. IF DIFFERENT PIPE SIZES ARE BEING CONNECTED, STEEL REINFORCEMENT BARS SHALL BE SUPPLIED AS GIVEN IN TABLE BELOW FOR THE LARGER DIAMETER PIPE.

2. CONTRACTOR SHALL PROVIDE BULKHEAD TO KEEP CONCRETE FROM SPILLING INTO LARGER PIPE. BULKHEAD MUST BE REMOVED, OR LEFT IN PLACE, ONLY AS APPROVED BY THE COMMISSIONER.

PIPE TO PIPE REINFORCED CONCRETE COLLAR DETAIL

SCALE: N.T.S.

D	T	W	U BAR			TOTAL	H BAR		TOTAL	CLASS SI	
PIPE DIA.	PIPE THICKNESS	WIDTH	X	Y	QTY	LENGTH	S	QTY	LENGTH	CONCRETE	#5 EPOXY REBAR
(IN)	(IN)	(IN)	(IN)	(IN)	(EACH)	(FT)	(IN)	(EACH)	(FT)	(CU YD)	(LBS)
24	3.00	46.0	40.00	28.00	4	32.0	9 5/8	16.0	24.0	0.72	58.4
27	3.25	49.5	43.50	29.75	4	34.3	10 1/2	16.0	24.0	0.81	60.8
30	3.50	53.0	47.00	31.50	4	36.7	11 3/8	16.0	24.0	0.89	63.3
33	3.75	56.5	50.50	33.25	4	39.0	9 4/5	20.0	30.0	0.98	72.0
36	4.00	60.0	54.00	35.00	4	41.3	10 1/2	20.0	30.0	1.07	74.4
42	4.50	67.0	61.00	38.50	4	46.0	9 7/8	24.0	36.0	1.26	85.5
48	5.00	74.0	68.00	42.00	4	50.7	11 1/8	24.0	36.0	1.46	90.4

STANDARD REVISIONS	
DATE	DESCRIPTION
7/3/2018	APPROVED PLAN

PERCENT COMPLETE	DATE
30	11-22-19
60 REV	04-09-20
75 REV	05-28-20
90 REV	08-05-20
100	08-21-20
BULLETIN	

CITY OF CHICAGO
DEPARTMENT OF WATER MANAGEMENT
BUREAU OF ENGINEERING SERVICES

CONCRETE COLLAR / CONNECTION DETAILS

DRAWN: SBW
DESIGNED:
CHECKED:
REVIEWED:

A.19

61 OF 69

PN 7500

$FILE$
$DATE$

STANDARD DRAINAGE STRUCTURES FOR PUBLIC STREETS

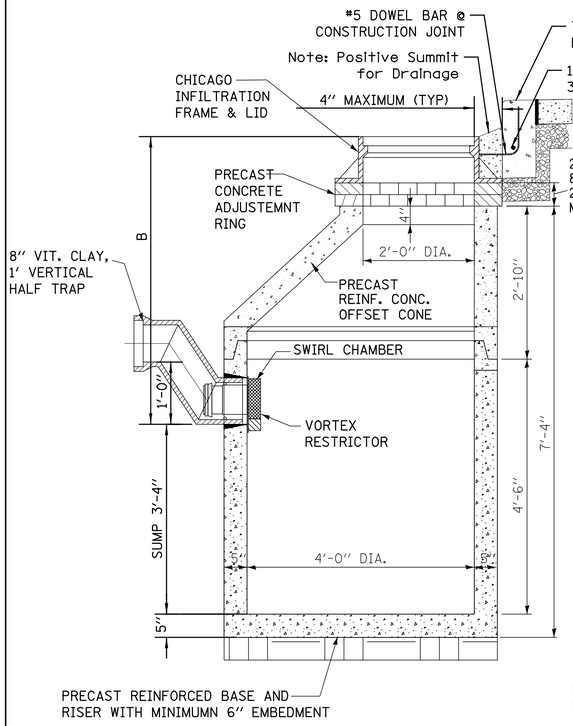

STANDARD CATCH BASIN-4' DIA.

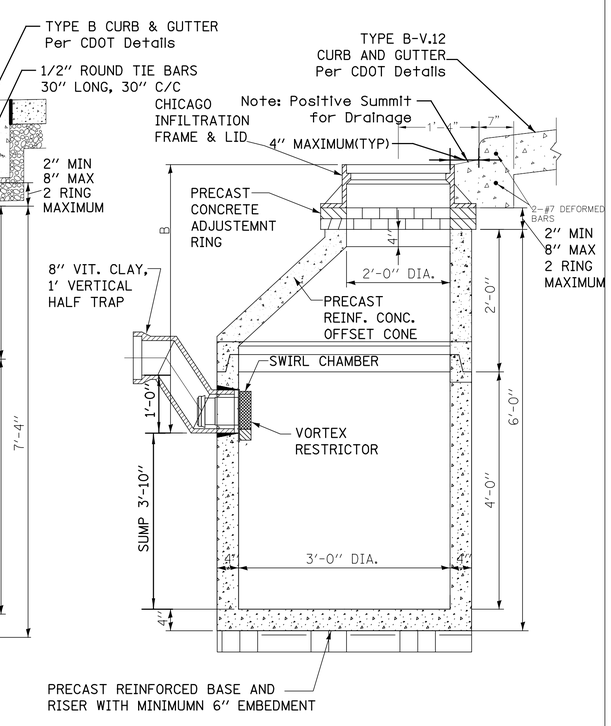

STANDARD CATCH BASIN-3' DIA.

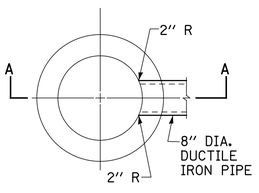

PLAN

(FRAME & LID NOT SHOWN)

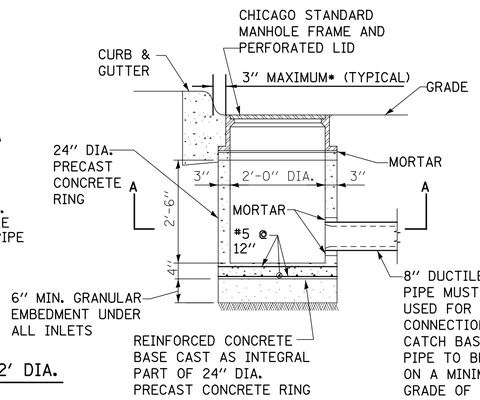

STANDARD INLET-2' DIA.

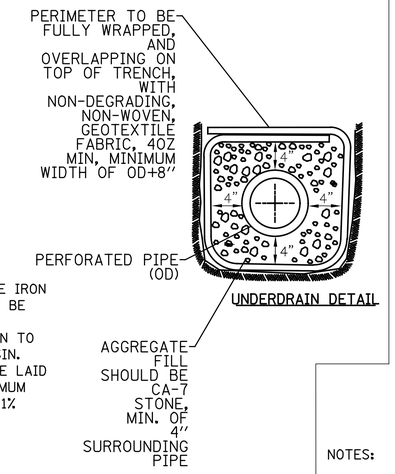

UNDERDRAIN DETAIL

NOTE:
INLETS AND 3' DIAMETER CATCH BASINS ARE TO BE USED ONLY WITH PRIOR APPROVAL OF DWM SEWER ENGINEER OR FIELD INSPECTOR.

1. FOR TRENCH BACKFILL, REFER TO IDOT SSRBC, ARTICLE 1003.04.

2. FOR GRANULAR EMBEDMENT, USE CA-11, CRUSHED GRAVEL, CRUSHED STONE, OR CRUSHED CONCRETE.

3. FOR STABILIZATION STONE, 12" OF CA-1 STONE IS ONLY REQUIRED WHEN UNSTABLE MATERIAL IS ENCOUNTERED AT TRENCH BOTTOM.

*OUTER EDGE OF FRAME TO FACE OF CURB

STANDARD DRAINAGE STRUCTURES FOR PUBLIC ALLEYS

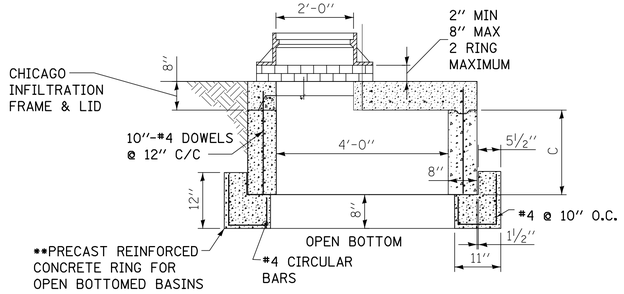

GREEN ALLEY OPEN BOTTOM CATCH BASIN

TO BE USED IF STANDARD CONE WITH REQUIRED SUMP DEPTH INSTALLATION IS IMPOSSIBLE.

**IF FLAT TOP SLAB CATCH BASIN IS USED IN AN OPEN BOTTOM APPLICATION, THE FOLLOWING CRITERIA MUST BE FOLLOWED:

-"C" MUST BE A MINIMUM OF 3 FEET.

- PROVIDE A MINIMUM AGGREGATE BASE OF 1.0 FEET BELOW PRECAST REINFORCED CONCRETE RING.

-GEOTECH FABRIC MUST BE PLACED ON SIDES AND BOTTOM OF AGGREGATE SURROUNDING BASIN.

-AGGREGATE BASE MUST PROVIDE ADEQUATE STORMWATER STORAGE CAPACITY PER THE APPROVED/PERMITTED PLANS.

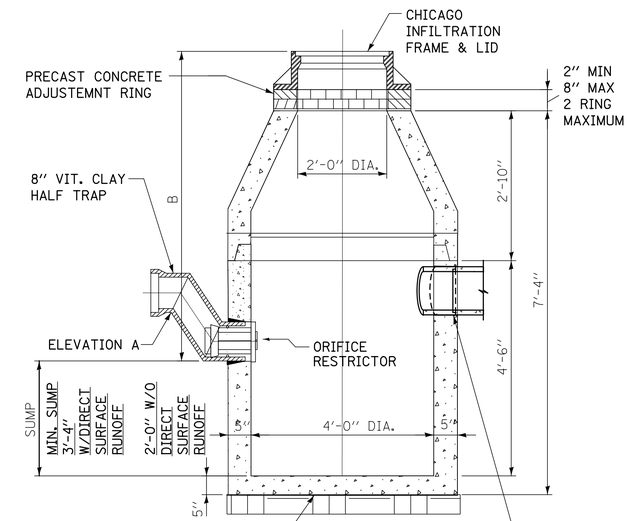

CATCH BASIN-ORIFICE RESTRICTOR

N.T.S.

NOTES:

1. FOR ANY DRAIN TILE CONNECTION, THE WATER TABLE MUST BE AT LEAST 3.5 FEET BELOW ELEVATION A.

2. PVC UNDERDRAINS MUST BE 4" MINIUMUM DIAMETER, (6" RECOMMENDED) AND MUST BE WRAPPED IN GEOTECH FABRIC.

DRAINAGE STRUCTURES RESTRICTORS

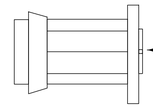

ORIFICE RESTRICTOR

INSERT THE RESTRICTOR INTO THE HALF-TRAP. UPON TIGHTENING OF THE CENTER NUT ON THE FACE OF THE RESTRICTOR, THE RUBBER O-RINGS WILL EXPAND INSIDE THE HALF TRAP, PROVIDING A WATER- TIGHT SEAL. PULL ON RESTRICTOR TO VERIFY THAT A TIGHT FIT IS MADE.

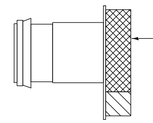

VORTEX RESTRICTOR

PULL ON RESTRICTOR TO VERIFY THAT A TIGHT FIT IS MADE.

INSERT THE RESTRICTOR WITH THE OPENING DOWN. UPON TIGHTENING OF THE 2 BOLTS ON THE FACE OF THE RESTRICTOR, THE RUBBER O-RINGS WILL PROVIDE A WATER- TIGHT SEAL.

GENERAL NOTES:

1. CATCH BASIN TO CATCH BASIN CONNECTIONS ARE ALLOWED IN PRIVATE SITES & ALLEYS. ONLY THE DOWNSTREAM CATCH BASIN IS REQUIRED TO HAVE A HALF-TRAP.

2. IF B < 4 FEET, THEN USE A DUCTILE IRON PIPE HALF TRAP AND FLAT TOP SLAB CATCH BASIN AS NECESSARY.

3. INLETS AND 3' DIAMETER CATCH BASINS ARE TO BE USED ONLY WITH PRIOR APPROVAL OF DWM FIELD INSPECTOR.

RESTRICTOR NOTES:

THE DWM'S RAIN BLOCKER RESTRICTOR PROGRAM MUST BE MAINTAINED WITH ANY ROADWAY IMPROVEMENT.

THE DESIGN OF ANY ROADWAY IMPROVEMENT MUST CONSIDER LIMITING THE NUMBER OF CATCH BASINS TO THE EXTENT PRACTICAL. THE NUMBER OF EXISTING STRUCTURES SHOULD NOT BE INCREASED.

THE RESTRICTORS CAN BE OBTAINED FROM DWM CENTRAL DISTRICT AT 3901 S. ASHLAND AVE. THE CONTRACTOR SHOULD ARRANGE FOR PICK UP BY CONTACTING 312-747-8736 (7AM TO 3PM, M-F). CONTRACTOR MUST CALL 48 HOURS IN ADVANCE OF PICK UP DATE AND TIME.

FLOW RESTRICTORS MUST BE INSTALLED IN ALL CATCH BASINS OUTSIDE OF THE CENTRAL BUSINESS DISTRICT. RESTRICTORS MUST NOT BE INSTALLED IN CATCH BASINS IN CLOSE PROXIMITY TO VIADUCT AREAS, BUS STOPS, OR EMERGENCY ENTRANCES. THE DWM MUST APPROVE THE NON-INSTALLATION OR REMOVAL OF ANY RESTRICTOR. REQUIREMENTS FOR RESTRICTOR INSTALLATION ARE AS FOLLOWS:

*ARTERIAL STREETS: 3-INCH ORIFICE RESTRICTOR
*BUS ROUTES: 3-INCH ORIFICE RESTRICTOR
*RESIDENTIAL STREETS: 3-INCH VORTEX RESTRICTOR
*ALLEYS: 3-INCH ORIFICE RESTRICTOR IN THE LAST CB.
*CLOSED LIDS ARE REQUIRED ON ALL MANHOLES EXCEPT AT INTERSECTIONS WHERE A PERFORATED LID SHALL BE USED.

STANDARD REVISIONS	
DATE	DESCRIPTION
10/27/17	APPROVED

PERCENT COMPLETE		DATE
30		11-22-19
60	REV	04-09-20
75	REV	05-28-20
90	REV	08-05-20
100		08-21-20
BULLETIN		

CITY OF CHICAGO
DEPARTMENT OF WATER MANAGEMENT
BUREAU OF ENGINEERING SERVICES

DRAINAGE STRUCTURE DETAILS

DRAWN: SBW
DESIGNED:
CHECKED:
REVIEWED:

A.20

62 OF 69

PN 7500

$FILE$
$DATE$

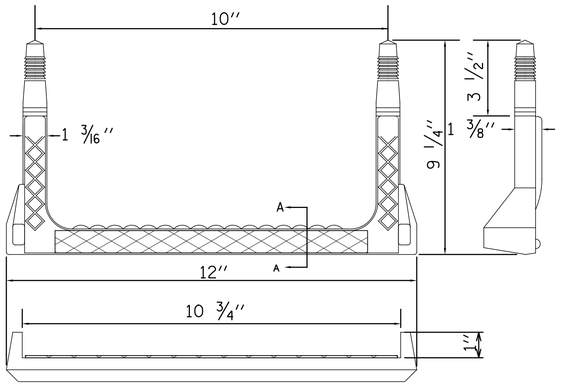

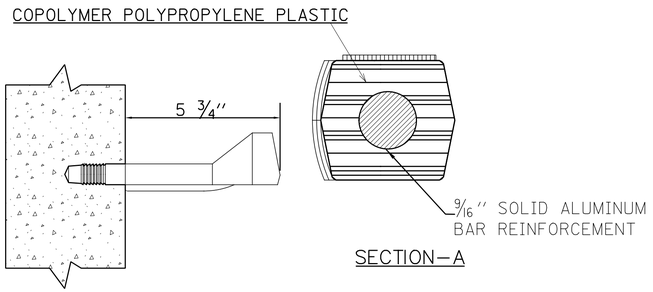

SECTION–A

RECTANGULAR STEP LADDER RUNG

FOR USE ONLY IN 48'' DIAMETER
AND LARGER MANHOLES.

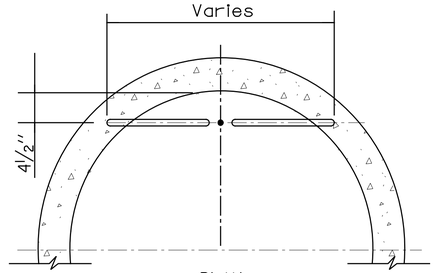

PLAN

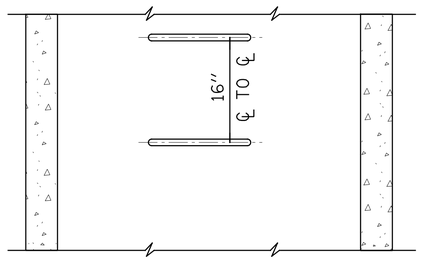

ELEVATION
TYPE X
RISER

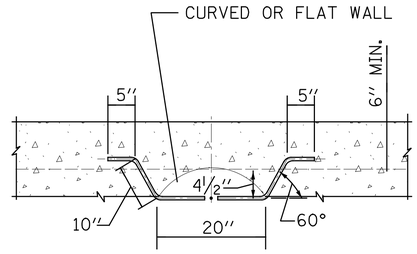

PLAN

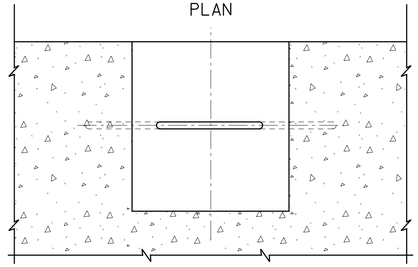

ELEVATION
TYPE Y
BASE

NOTES:

1. VERTICAL SPACING = 16'' O.C., ON VERTICAL WALL ONLY.

2. STEPS SHALL MEET THE REQUIREMENTS OF ASTM C478 IN ADDITION TO A HORIZONTAL PULL-OUT LOAD OF 1000 LBS. WHEN INSTALLED.

3. ALL STEPS SHALL BE VERTICALLY ALIGNED IN A STRAIGHT LINE.

4. MINIMUM CONCRETE STRENGTH MUST BE 3000 PSI

5. HOLES- PREFORMED/DRILLED
   A. HOLES MUST BE PARALLEL
   B. HOLES MUST BE 10'' CENTERED, 1'' DIAMETER
   C. MINIMUM DEPTH- 3 1/2'' TO 3 3/4''

STANDARD REVISIONS	
DATE	DESCRIPTION
5/8/17	APPROVED PLAN

PERCENT COMPLETE	DATE
30	11-22-19
60 REV	04-09-20
75 REV	05-28-20
90 REV	08-05-20
100	08-21-20
BULLETIN	

CITY OF CHICAGO
DEPARTMENT OF WATER MANAGEMENT
BUREAU OF ENGINEERING SERVICES

LADDER RUNGS

DRAWN: SBW
DESIGNED:
CHECKED:
REVIEWED:

A.22

63 OF 69

PN 7500

$FILE$
$DATE$

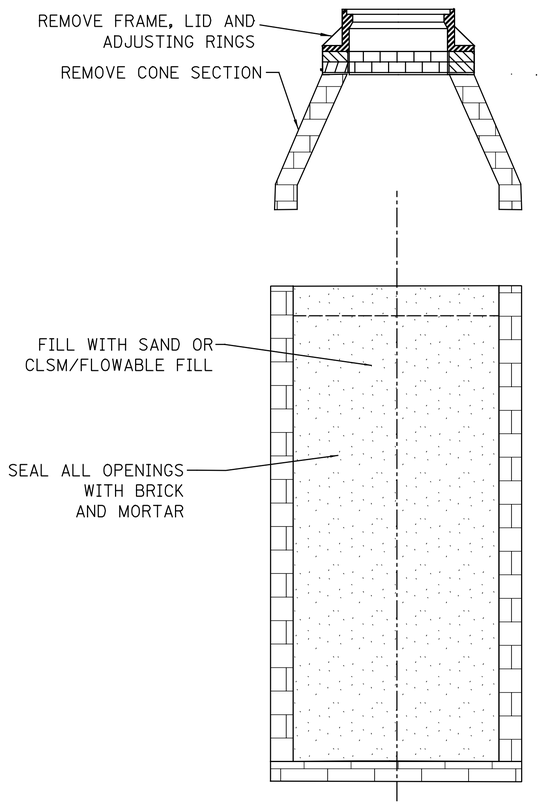

ABANDON CATCH BASIN

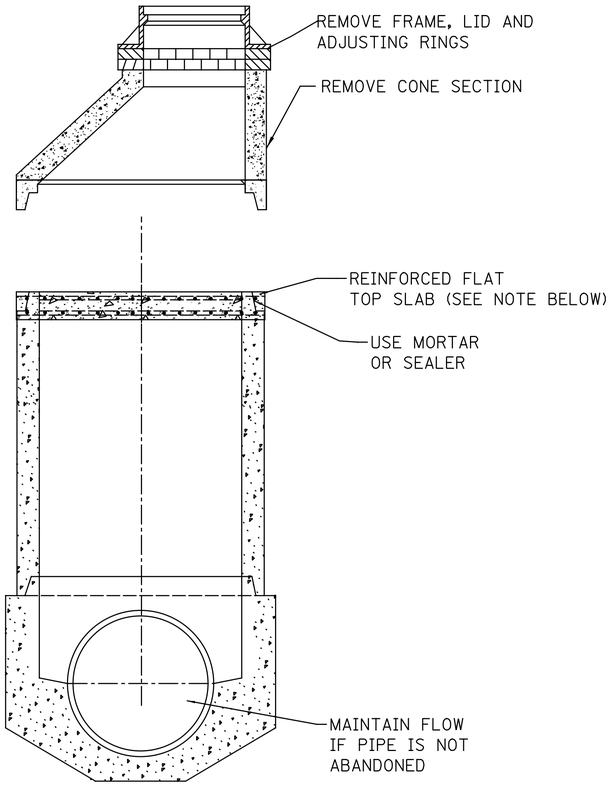

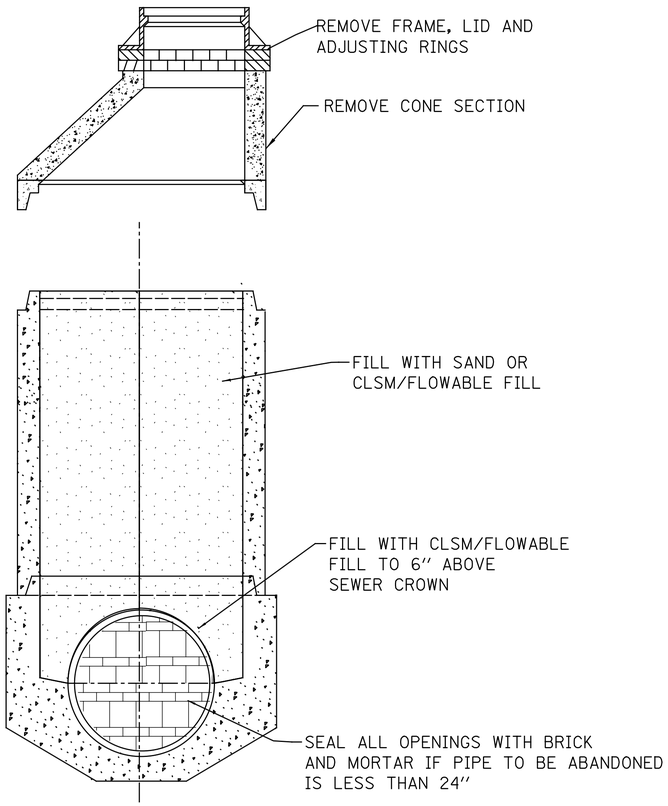

ABANDON MANHOLES

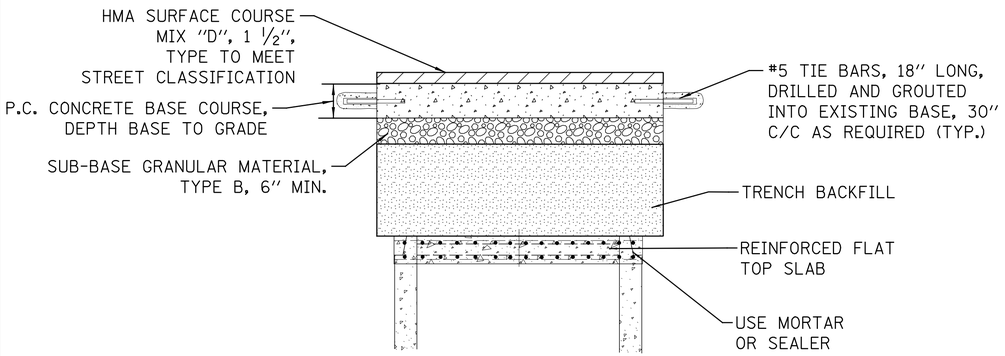

IN PAVEMENT AREA

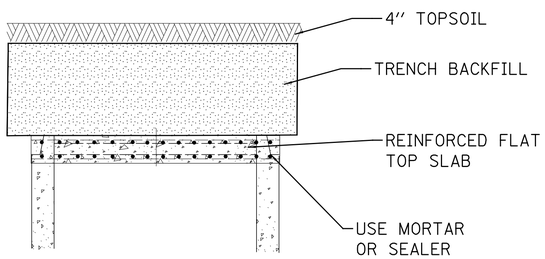

IN LANDSCAPE AREA

NOTE

REINFORCED FLAT TOP SLAB.
SEE IDOT STD. 602601-03 OR CURRENT MODIFIED WITH NO ACCESS HOLE

STANDARD REVISIONS	
DATE	DESCRIPTION
10/15/15	APPROVED PLAN

PERCENT COMPLETE	DATE
30	11-22-19
60 REV	04-09-20
75 REV	05-28-20
90 REV	08-05-20
100	08-21-20
BULLETIN	

CITY OF CHICAGO
DEPARTMENT OF WATER MANAGEMENT
BUREAU OF ENGINEERING SERVICES

ABANDONED SEWER STRUCTURE DETAILS

DRAWN: SBW
DESIGNED:
CHECKED:
REVIEWED:

A.23

64 OF 69

PN 7500

TYPE III TEMPORARY SUPPORT

ONLY FOR 6", 8" AND 12" WATER MAINS

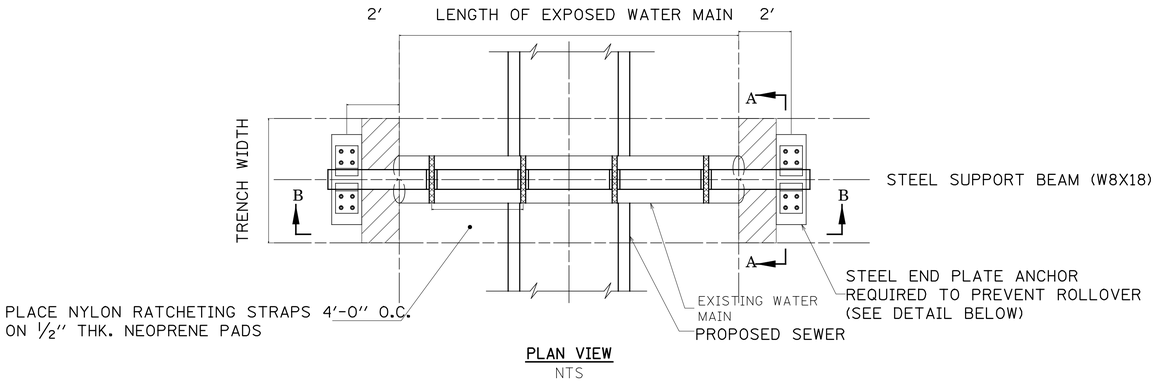

PLAN VIEW
NTS

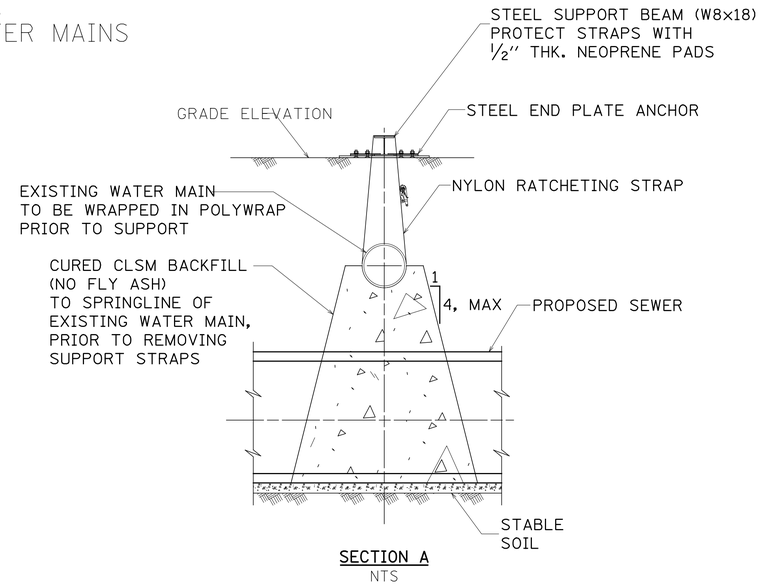

SECTION A
NTS

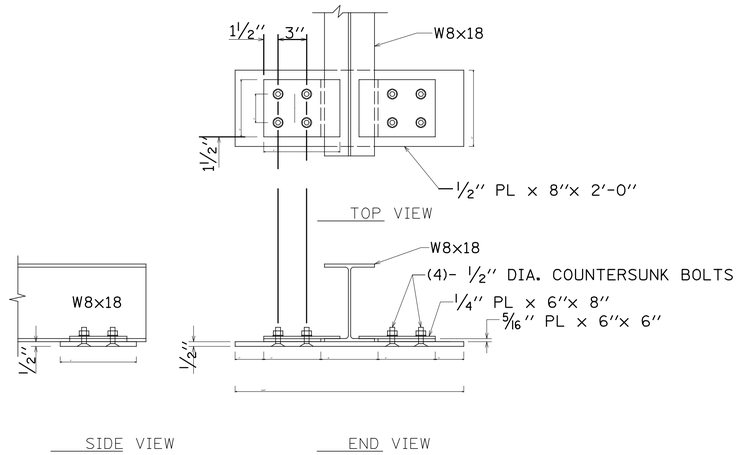

STEEL END PLATE ANCHOR DETAIL
NTS

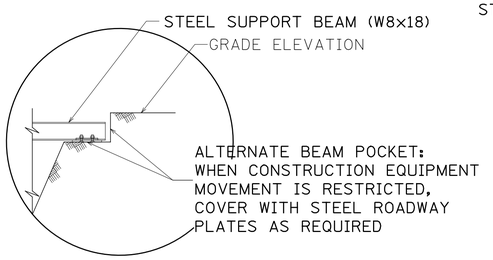

ALTERNATE BEAM POCKET DETAIL
NTS

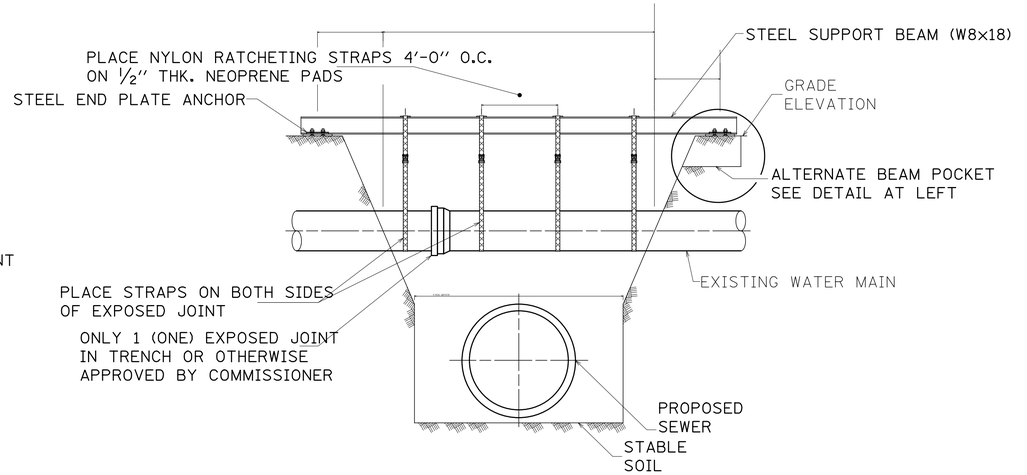

SECTION B
NTS

GENERAL NOTES FOR TYPE III SUPPORT:

1. THIS DETAIL APPLIES TO 6", 8" AND 12" WATER MAINS. WATER MAINS 16" AND GREATER REQUIRE A TYPE I OR TYPE II SUPPORT.
2. STRUCTURAL STEEL BEAMS SHALL CONFORM TO ASTM SPEC. A992. GENERAL PURPOSE STRUCTURAL STEEL PLATES SHALL CONFORM TO ASTM SPEC. A36.
3. EACH NYLON RATCHETING STRAP MUST HAVE RATED TENSILE STRENGTH GREATER THAN OR EQUAL TO 1,500 LBS. CONTRACTOR TO VERIFY THAT NEW STRAPS ARE USED AND ARE IN GOOD CONDITION DURING THE TEMPORARY SUPPORT OF THE MAIN. CONTRACTOR IS TO MONITOR THE WATER MAIN DURING THE SUPPORT TO ENSURE ZERO MOVEMENT OF THE PIPE AND NO ELONGATION OF THE STRAPS. IF THE STRAPS ARE EXPOSED TO CHEMICALS (SUCH AS CHLORINE), OR ULTRAVIOLET LIGHT, WET/DRY CYCLES, OR FREEZE/THAW CYCLES, THE CONTRACTOR MUST VERIFY THAT THE STRAPS ARE IN GOOD CONDITION OR MUST REPLACE THEM AS NECESSARY.

PERCENT COMPLETE	DATE
30	
60	
75	
90	
100	5/21/19
BULLETIN	

PERCENT COMPLETE	DATE
30	11-22-19
60 REV	04-09-20
75 REV	05-28-20
90 REV	08-05-20
100	08-21-20
BULLETIN	

CITY OF CHICAGO
DEPARTMENT OF WATER MANAGEMENT
BUREAU OF ENGINEERING SERVICES

WATER MAIN SUPPORT TYPE III

DRAWN:
DESIGNED:
CHECKED:
REVIEWED:

65 OF 69

PN 7500

$FILE$
$DATE$

TYPE I SUPPORT- TYPE A & B

TYPE I SUPPORT STRUCTURE REMAINS IN PLACE.
(USE WHEN SEWER WILL BE INSTALLED AT A FUTURE DATE OR JOB SITE CONDITIONS WILL NOT ACCOMODATE TYPE II SUPPORT INSTALLATION)

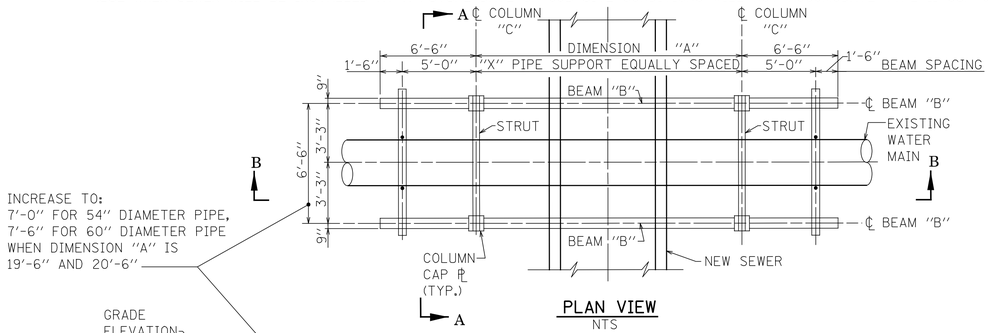

PLAN VIEW
NTS

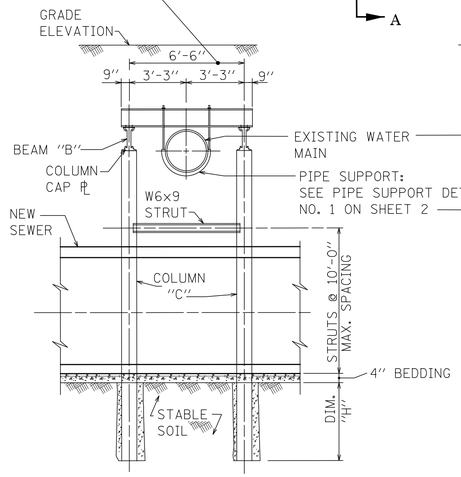

TYPE A - SECTION A
NTS

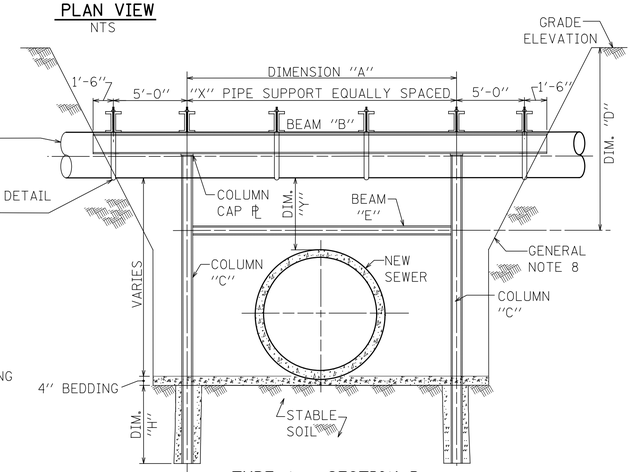

TYPE A - SECTION B
NTS

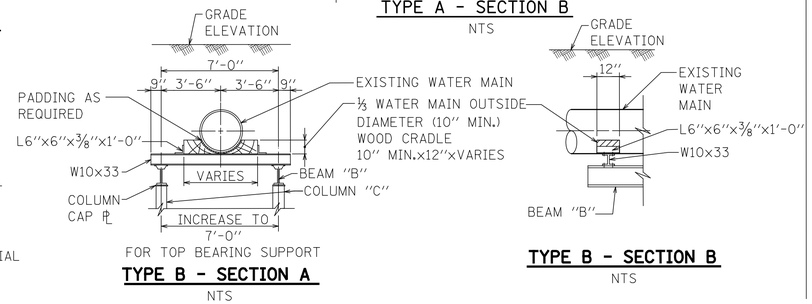

TYPE B - SECTION A
NTS

TYPE B - SECTION B
NTS

TYPE I SUPPORT NOTES- TYPE A & B:

1. SEE TYPE I SUPPORT TABLE ON SHEET 2 FOR BEAM MEMBER SIZES.
2. TYPE "A" SUPPORTS EXISTING WATER MAIN UNDERHUNG FROM CROSS BEAMS. TYPE "B" SUPPORTS EXISTING WATER MAIN BEARING ON TOP OF CROSS BEAMS. WHEN DIMENSION "Y" IS LESS THAN 2'-6" TYPE "A" SUPPORT MUST BE USED. MINIMUM DIMENSION "Y" FOLLOW IEPA REGULATIONS.
3. BACKFILL WITH CRUSHED STONE FILL MATERIAL OR CLSM AS REQUIRED.

TYPE II SUPPORT

TYPE II SUPPORT STRUCTURE WILL BE REMOVED.
(USE WHEN SEWER WILL BE INSTALLED IMMEDIATELY)

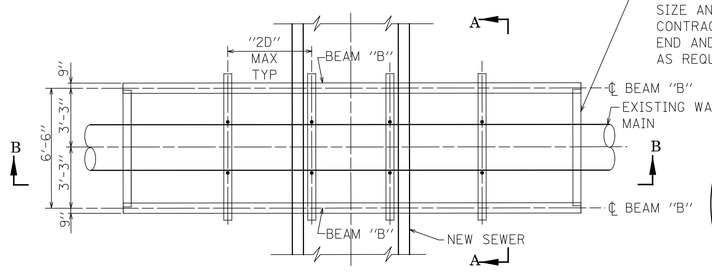

PLAN VIEW
NTS

BEAM MEMBER OF EQUAL DEPTH TO BEAM "B" TO PREVENT ROLLING. SIZE AND CONNECTION BY CONTRACTOR, TYPICAL EACH END AND INTERMEDIATE LOCATIONS AS REQUIRED BY DESIGN

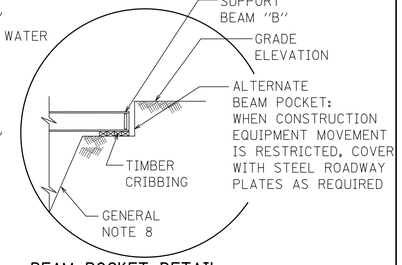

BEAM POCKET DETAIL
NTS

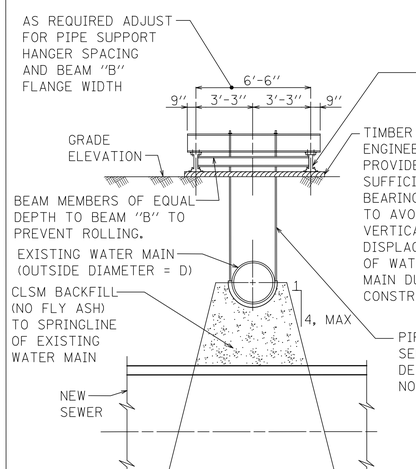

SECTION A
NTS

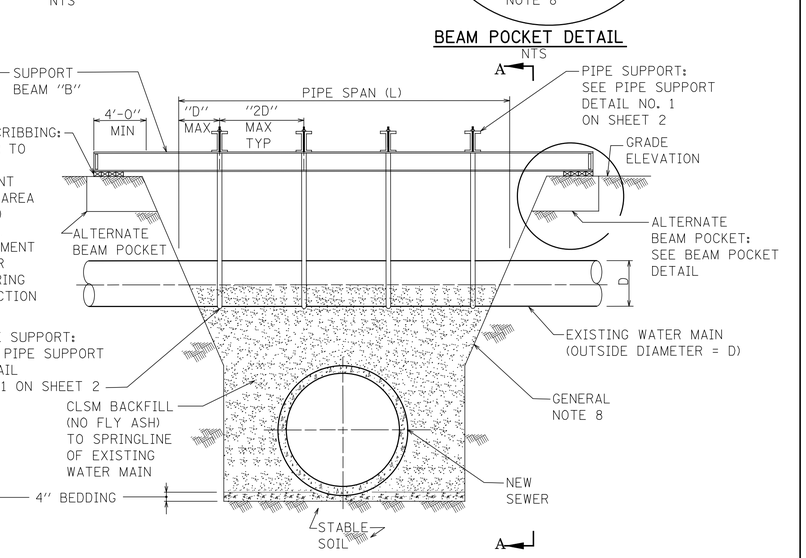

SECTION B
NTS

TYPE II SUPPORT NOTES:

1. THIS DETAIL APPLIES TO THE TEMPORARY SUPPORT OF EXISTING WATER MAINS UP TO 60 INCH INSIDE DIAMETER. SUPPORT BEAMS, CROSS BEAMS, PIPE SUPPORT, AND TIMBER CRIBBING MUST BE REMOVED AFTER CLSM BACKFILL HAS ATTAINED THE COMPRESSIVE STRENGTH THAT SATISFIES THE ENGINEER.
2. CONTRACTOR TO MONITOR CCP EXPOSED GROUTED JOINTS FOR SIGNS OF CRACKING WHILE THE PIPE IS SUPPORTED. IF SMALL CRACKS APPEAR, FILL WITH A FAST SETTING, PORTLAND CEMENT WATER STOP (SIKASET PLUG OR APPROVED EQUAL).

SUPPORT OF EXISTING WATER MAIN CAST IRON, DUCTILE IRON OR CONCRETE CYLINDER PIPE

GENERAL NOTES FOR TYPE I & II SUPPORTS:

1. TYPE II SUPPORT IS CDWM PREFERRED SUPPORT METHOD. USE TYPE I SUPPORT WHEN SEWER WILL BE INSTALLED AT A FUTURE DATE REQUIRING A SECOND EXCAVATION. TYPE I SUPPORT MUST ALSO BE INSTALLED WHEREVER JOB SITE CONDITIONS WILL NOT ACCOMODATE TYPE II SUPPORT TO BE INSTALLED (SUCH AS LOCATIONS WHERE THE WIDTH OF EXCAVATION WOULD CREATE EXCESSIVE ROADWAY LANE CLOSURES). IT IS THE RESPONSIBILITY OF THE CONTRACTOR TO SELECT THE APPROPRIATE TYPE OF PIPE SUPPORT METHOD FOR CONDITIONS AT THE JOB SITE, OR AS DIRECTED BY THE COMMISSIONER.
2. THESE DETAILS ARE PROVIDED FOR REFERENCE ONLY AND DO NOT REPRESENT A COMPLETE DESIGN. THE CONTRACTOR MUST COMPLETE THE DESIGN FOR EACH LOCATION WHERE WATER MAIN SUPPORT IS TO BE IMPLEMENTED. THE COMPLETE DESIGN MUST INCLUDE (BUT NOT LIMITED TO) STRUCTURAL STEEL CONNECTION DETAILS, COLUMN BRACE SIZE AND SPACING, CONSIDERATION OF BEAM BEARING LOADS ON EXISTING ROADWAY SURFACES OR GRADE, EFFECTS OF BUOYANCY ON THE NEW SEWER DUE TO FLOWABLE CLSM, FOUNDATION DEPTH AND DIAMETER BASED ON BEST AVAILABLE SOIL DATA, AND DESIGN FOR SUPPORT OF EXCAVATIONS.
3. THESE DETAILS WERE DEVELOPED FOR SUPPORT OF WATER MAINS UP TO 60 INCHES IN DIAMETER, UP TO 6 FEET OF COVER AND AASHTO HS 20-44 WHEEL LOADS.
4. DUCTILE IRON PIPE MUST BE WRAPPED IN POLYETHYLENE PRIOR TO PLACEMENT OF BACKFILL.
5. THE CONTRACTOR MUST SUBMIT SHOP DRAWINGS AND CALCULATIONS FOR THE SUPPORT METHOD USED STAMPED BY A LICENSED STRUCTURAL ENGINEER IN THE STATE OF ILLINOIS. THE DESIGN MUST TAKE INTO ACCOUNT THE ACTUAL FIELD VERIFIED DIMENSIONS, SPANS, AND TRIBUTARY LOADING WHICH MAY EXCEED VALUES SHOWN. DMW MAINTAINS A RECORD OF BURIED TYPE I SUPPORT STRUCTURES AND THEIR LOCATIONS. THE CONTRACTOR MUST FURNISH AS - BUILT DRAWINGS FOR THIS RECORD.
6. THE DESIGN OF THE MAIN SUPPORT BEAM "B" MUST LIMIT TOTAL DEFLECTION OF THE PIPE TO L/480 OF THE PIPE SPAN (L).
7. MATERIAL PROPERTIES MUST MEET THE FOLLOWING CRITERIA:

W-SHAPES	ASTM A992 GRADE 50
CHANNELS	ASTM A36
PLATES & BARS	ASTM A36
THREADED RODS	ASTM A36
HSS SHAPES	ASTM A500 GRADE B
HIGH STRENGTH BOLTS	ASTM A325 N-BOLTS
CLSM	IDOT STANDARD SPECIFICATIONS SECTION 1019 MIX 2

8. THE CONTRACTOR MUST SLOPE TRENCH WALLS OR SHORE EXCAVATIONS FOR CONSTRUCTION SAFETY AND IN ACCORDANCE WITH CURRENT OSHA REQUIREMENTS. THE OVERALL WIDTH OF EXCAVATION, TRAFFIC CONTROL, AND PROTECTION MUST BE SUBMITTED TO CDWM FOR REVIEW PRIOR TO THE START OF CONSTRUCTION.
9. OPEN EXCAVATIONS AND IN PLACE FLOWABLE CLSM BACKFILL MUST BE CORDONED OFF OR COVERED TO PROVIDE PROTECTION AGAINST ACCIDENTIAL FALLING.
10. REFER TO STANDARD SPECIFICATIONS FOR WATER MAIN CONSTRUCTION FOR ADDITIONAL INFORMATION.

STANDARD REVISIONS	
DATE	DESCRIPTION
05/10	

PERCENT COMPLETE	DATE
30	11-22-19
60 REV	04-09-20
75 REV	05-28-20
90 REV	08-05-20
100	08-21-20
BULLETIN	

CITY OF CHICAGO
DEPARTMENT OF WATER MANAGEMENT
BUREAU OF ENGINEERING SERVICES

SUPPORT OF EXISTING WATER MAIN, CAST IRON, DUCTILE IRON, OR CONCRETE CYLINDER PIPE

DRAWN:
DESIGNED:
CHECKED:
REVIEWED:

1 OF 2

66 OF 69

PN 7500

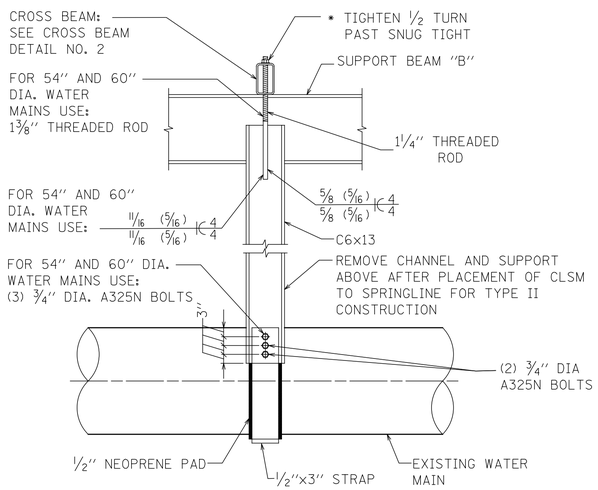

1 PIPE SUPPORT DETAIL
NTS

1. MINIMUM TWO PIPE SUPPORTS PER PIPE SEGMENT.
2. WELDED CONNECTION MAY BE SUBSTITUTED FOR BOLTED CONNECTION WHEN SUPPORT STRUCTURE IS TO REMAIN IN PLACE PERMANENTLY.

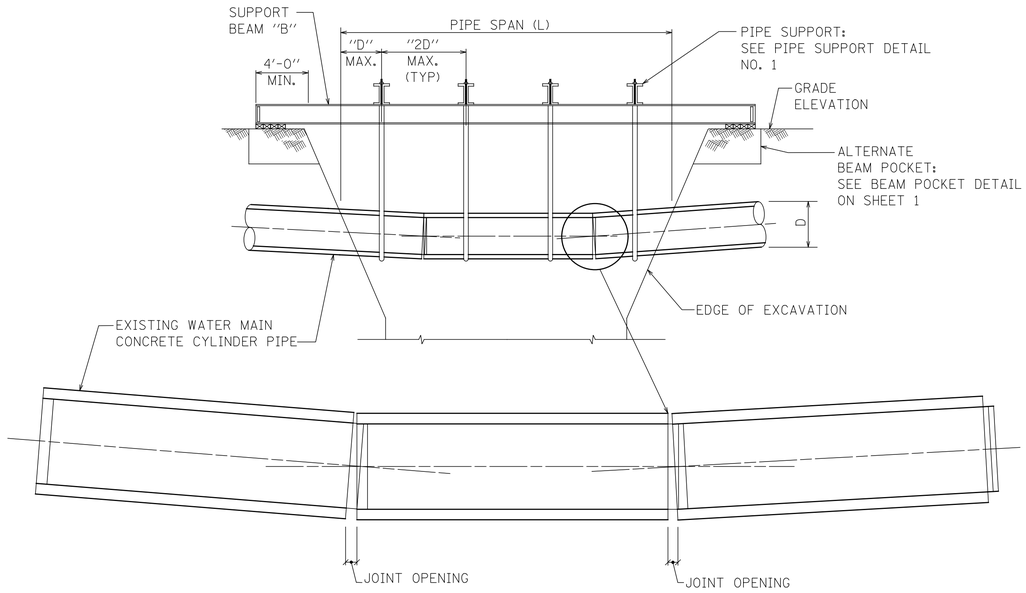

CONCRETE CYLINDER PIPE DEFLECTION CRITERIA

* CONTRACTOR TO TIGHTEN ADJUSTING LOAD IN EACH HANGER SUCH THAT PIPE JOINTS DO NOT OPEN EXCEEDING MANUFACTURE'S RECOMMENDATIONS. LEAKAGE OR FAILURE OF THE WATER MAIN IS THE CONTRACTOR'S RESPONSIBILITY.

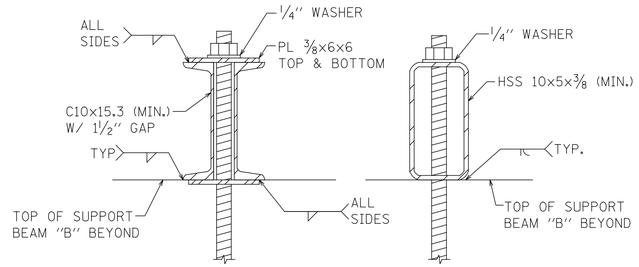

TYPE A TYPE B

NOTE: CONTRACTOR MAY SELECT CROSS BEAM TYPE

2 CROSS BEAM DETAIL
NTS

1. CONTRACTOR WILL TACK WELD NUT OR SUPPLY A SECOND NUT AS APPROPRIATE FOR LOCKING NUT ROTATION ON THREADED RODS USED FOR PERMANENT AND TEMPORARY WATER MAIN SUPPORT.
2. CONTRACTOR WILL RECORD SUPPORT BEAM AND WATER MAIN ELEVATIONS AND THEN MONITOR ELEVATIONS DURING CONSTRUCTION FOR ANY SETTLEMENT. UNEVEN SETTLEMENT SHOULD BE ANTICIPATED AND SHIMS PROVIDED.

LOCATION	SHEET NO.	BID ITEM NO.	DIA. OF SEWER	DIMENSION "A"	"X" NUMBER OF SPACES	DIMENSION "D"	BEAM SIZE "E"	DIMENSION "H"	TYPE I SUPPORT - TYPE A WATER MAIN HANGING FROM STRUCTURE						TYPE I SUPPORT - TYPE B WATER MAIN BEARING ON STRUCTURE					
									24", 30" & 36" DIA. W.M.		42" & 48" DIA. W.M.		54" & 60" DIA. W.M.		24", 30" & 36" DIA. W.M.		42" & 48" DIA. W.M.		54" & 60" DIA. W.M.	
									BEAM "B"	COLUMN "C"	BEAM "B"	COLUMN "C"	BEAM "B"	COLUMN "C"	BEAM "B"	COLUMN "C"	BEAM "B"	COLUMN "C"	BEAM "B"	COLUMN "C"
			30" & 36"	13'-0"	3				W10x39	W8x24	W12x40	W8x24	W14x43	W8x31	W12x40	W8x24	W14x43	W8x24	W14x43	W8x31
			42" & 48"	14'-0"	3				W10x39	W8x24	W12x40	W8x24	W14x43	W8x31	W12x40	W8x24	W14x43	W8x24	W14x43	W8x31
			54" & 60"	15'-0"	3				W10x39	W8x24	W12x40	W8x24	W14x61	W8x31	W12x40	W8x24	W14x43	W8x24	W14x61	W8x31
			66" & 72"	16'-0"	4				W12x40	W8x24	W14x43	W8x24	W14x61	W8x31	W12x40	W8x24	W14x43	W8x24	W14x61	W8x31
			78" & 84"	17'-6"	4				W12x45	W8x31	W14x48	W8x31	W14x68	W8x40	W14x48	W8x31	W14x61	W8x31	W14x68	W8x40
			90" & 96"	18'-6"	4				W14x48	W8x31	W14x53	W8x31	W14x82	W8x40	W14x53	W8x31	W14x61	W8x31	W14x82	W8x40
			102" & 108"	19'-6"	4				W14x53	W8x31	W14x61	W8x31	W14x90	W8x40	W14x53	W8x31	W14x61	W8x31	W14x90	W8x40
			114" & 120"	20'-6"	4				W14x61	W8x31	W14x68	W8x31	W14x99	W8x40	W14x61	W8x31	W14x68	W8x31	W14x99	W8x40

TYPE I SUPPORT TABLE

SUPPORT OF EXISTING WATER MAIN CAST IRON, DUCTILE IRON OR CONCRETE CYLINDER PIPE DETAILS

STANDARD REVISIONS	
DATE	DESCRIPTION
05/10	

PERCENT COMPLETE	DATE
30	11-22-19
60 REV	04-09-20
75 REV	05-28-20
90 REV	08-05-20
100	08-21-20
BULLETIN	

CITY OF CHICAGO
DEPARTMENT OF WATER MANAGEMENT
BUREAU OF ENGINEERING SERVICES

SUPPORT OF EXISTING WATER MAIN, CAST IRON, DUCTILE IRON, OR CONCRETE CYLINDER PIPE

DRAWN:
DESIGNED:
CHECKED:
REVIEWED:

2 OF 2

67 OF 69

PN 7500

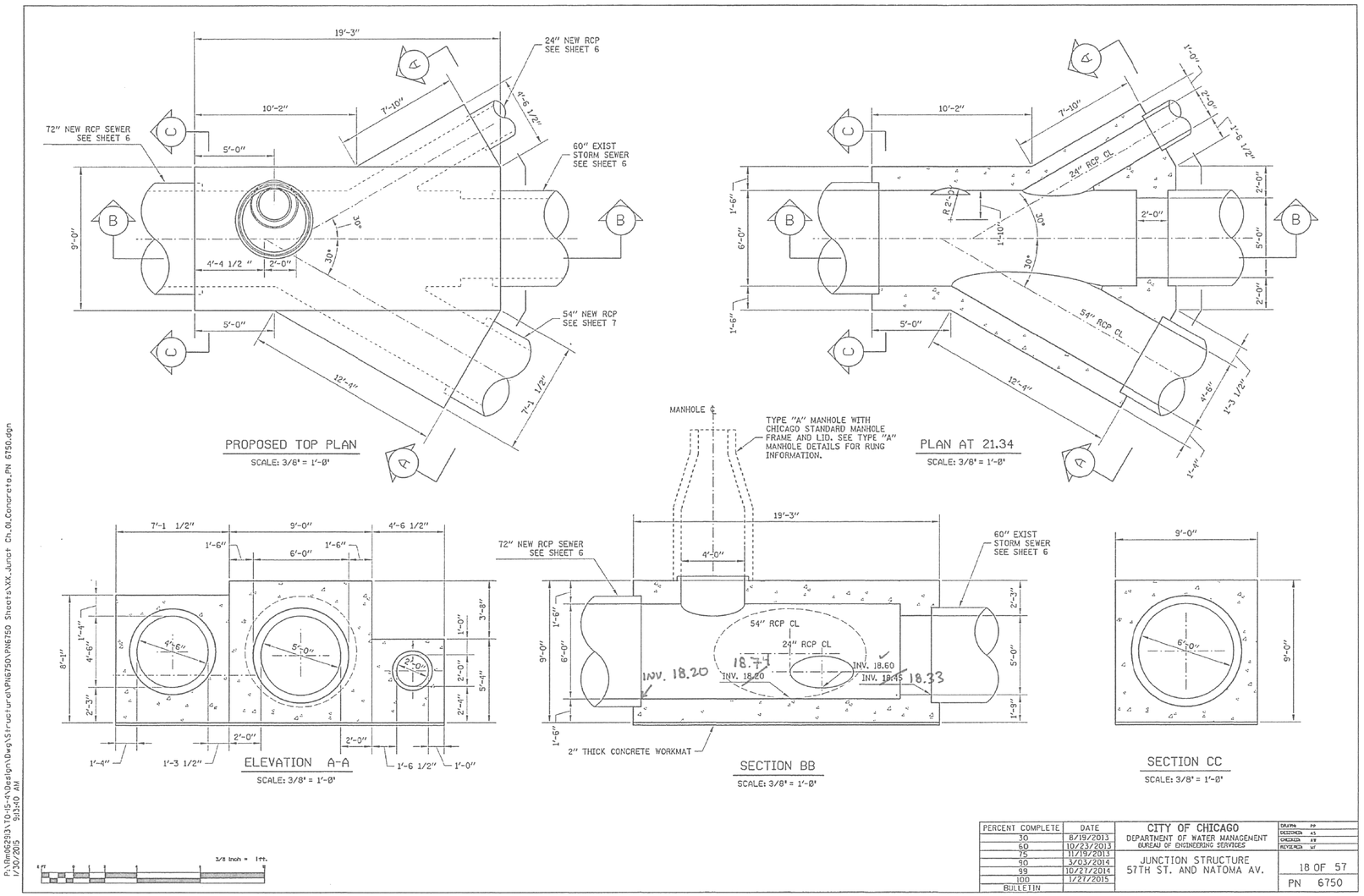

PERCENT COMPLETE	DATE
30	8/19/2013
60	10/23/2013
75	11/19/2013
90	3/03/2014
99	10/27/2014
100	1/27/2015
BULLETIN	

CITY OF CHICAGO
DEPARTMENT OF WATER MANAGEMENT
BUREAU OF ENGINEERING SERVICES

JUNCTION STRUCTURE
57TH ST. AND NATOMA AV.

DRAWN: PP
DESIGNED: AS
CHECKED: BW
REVIEWED: WF

18 OF 57

PN 6750

P:\Rm062913\TO-15-4\Design\Dwg\Structural\PN6750\PN6750 Sheets\XX_Junct Ch.01_Concrete.PN 6750.dgn
1/30/2015 9:13:40 AM

BT
4/18/17

PERCENT COMPLETE	DATE
30	11-22-19
60 REV	04-09-20
75 REV	05-28-20
90 REV	08-05-20
100	08-21-20
BULLETIN	

CITY OF CHICAGO
DEPARTMENT OF WATER MANAGEMENT
BUREAU OF ENGINEERING SERVICES

AS-BUILT
JUNCTION STRUCTURE
W 57TH ST AND S NATOMA AV

DRAWN:
DESIGNED:
CHECKED:
REVIEWED:

OUC EFP-102974

68 OF 69

PN 7500

$FILEL$
$DATE$

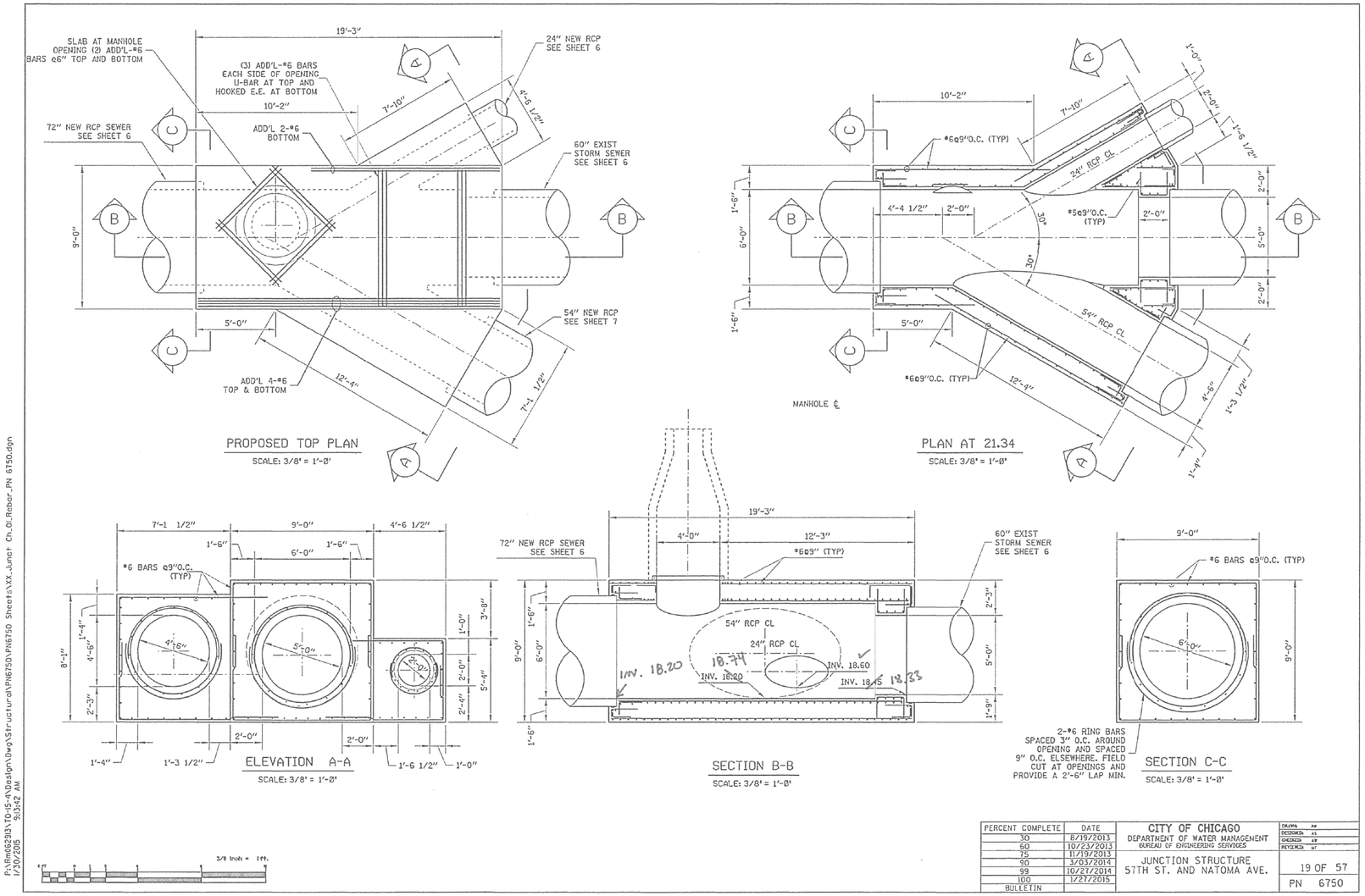

PERCENT COMPLETE	DATE
30	8/19/2013
60	10/23/2013
75	11/19/2013
90	3/03/2014
99	10/27/2014
100	1/27/2015
BULLETIN	

CITY OF CHICAGO
DEPARTMENT OF WATER MANAGEMENT
BUREAU OF ENGINEERING SERVICES

JUNCTION STRUCTURE
57TH ST. AND NATOMA AVE.

DRAWN: PP
DESIGNED: AS
CHECKED: AW
REVIEWED: MT

19 OF 57

PN 6750

P:\Rm062913\TO-15-4\Design\Dwg\Structural\PN6750\PN6750 Sheets\XX_Junct Ch_01_Rebar_PN 6750.dgn
1/30/2015 9:13:42 AM

BT
4/18/17

PERCENT COMPLETE	DATE
30	11-22-19
60 REV	04-09-20
75 REV	05-28-20
90 REV	08-05-20
100	08-21-20
BULLETIN	

CITY OF CHICAGO
DEPARTMENT OF WATER MANAGEMENT
BUREAU OF ENGINEERING SERVICES

AS-BUILT
JUNCTION STRUCTURE
W 57TH ST AND S NATOMA AV

DRAWN:
DESIGNED:
CHECKED:
REVIEWED:

OUC EFP-102974

69 OF 69

PN 7500

$FILEL$
$DATE$

PN 7445

CITY OF CHICAGO
LORI E. LIGHTFOOT, MAYOR
DEPARTMENT OF WATER MANAGEMENT
RANDY CONNER, COMMISSIONER
BUREAU OF ENGINEERING SERVICES
SEWER SECTION
WILLIAM CHEAKS, MANAGING DEPUTY COMMISSIONER

W 44TH PL FROM S PRINCETON AV TO S SHIELDS AV
S SHIELDS AV FROM W 44TH PL TO W 45TH ST
S PARNELL AV FROM W 44TH ST TO W 43RD PL

V3 Companies
7325 Janes Avenue
Woodridge, IL 60517
630.724.9200 phone
630.724.9202 fax
www.v3co.com
Vision. Venture. Virtute... The Vision to Transform with Excellence!

STATE OF ILLINOIS HEIDI E. VOIROL ILLINOIS 062-057225 LICENSED PROFESSIONAL ENGINEER

HEIDI E. VOIROL
ILL. LICENSED PROFESSIONAL
ENGINEER NO. 062-057225
LICENSE EXPIRES ON NOVEMBER 30, 2021

BEFORE YOU DIG IN CHICAGO, CALL DIGGER (312) 744-7000

THIS CERTIFIES THAT THESE DRAWINGS HAVE BEEN REVIEWED TO THE BEST OF MY KNOWLEDGE AND BELIEVE ARE IN ACCORDANCE WITH THE AMERICANS WITH DISABILITIES ACT (ADA), AND ALL CODES AND BUILDING ORDINANCES OF THE CITY OF CHICAGO, STATE OF ILLINOIS.

LICENSED ARCHITECT / LICENSED ENGINEER

DWM PM: Chuck Mann

FILE NAME: PLOT SCALE: PLOT DATE:

SEWER IMPROVEMENT PROGRAM

SHEET NO	DESCRIPTION
	COVER SHEET/INDEX
1	LOCATION/INDEX MAP, GENERAL/SPECIAL NOTES, LEGEND
2	SOIL BORINGS
~~3~~	~~SUMMARY OF QUANTITIES~~
4	BENCHMARKS AND CONTROL POINTS
5	ALIGNMENTS AND TIES
6	PLAN & PROFILE, W 44TH PL - S PRINCETON AV TO S SHIELDS AV
7	PLAN & PROFILE, S SHIELDS AV - W 44TH PL TO W 45TH ST
8	PLAN & PROFILE, S PARNELL AV - W 44TH ST TO W 43RD PL
9	TYPICAL SECTIONS
10	FULL PAVEMENT RESTORATION, W 44TH PL - S PRINCETON AV TO S SHIELDS AV
11	PARTIAL PAVEMENT RESTORATION, S SHIELDS AV - W 44TH PL TO W 45TH ST
12	PARTIAL PAVEMENT RESTORATION, S PARNELL AV - W 44TH ST TO W 43RD PL
13-30	DETAILS

PERCENT COMPLETE	DATE
30	01-14-19
60	04-19-19
75	08-02-19
90	09-23-19
100	11-09-20
BULLETIN	

OUC EFP-106072

CITY OF CHICAGO
DEPARTMENT OF WATER MANAGEMENT
BUREAU OF ENGINEERING SERVICES

APPROVED _____ COORDINATING ENGINEER
APPROVED _____ CHIEF ENGINEER
APPROVED _____ DEPUTY COMMISSIONER
APPROVED Randy Conner COMMISSIONER
DATE: 11/9/20

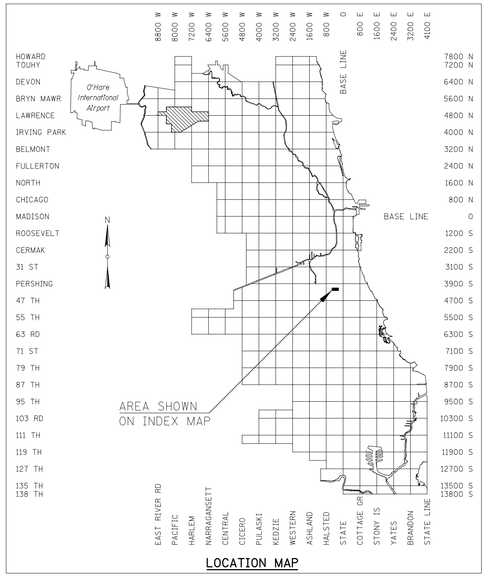

LOCATION MAP

PROJECT LOCATION

N.T.S.

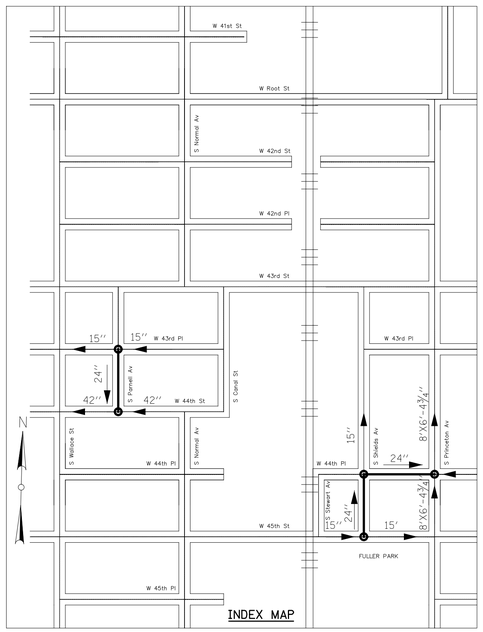

INDEX MAP

LEGEND

TO BE BUILT UNDER THIS CONTRACT

PRINCIPAL EXISTING CITY SEWER

MAIN LINE LENGTH = 1,068 L.F.

AUXILLARY LENGTH = 52 L.F.

TOTAL LENGTH = 1,120 L.F.

STANDARD SYMBOLS

EX	PR	
		SEWER MANHOLE (TYPE A)
		SEWER MANHOLE (TYPE A) BASE TEE
		SEWER MANHOLE (TYPE B)
		SEWER MANHOLE (TYPE B) MODIFIED
		SEWER MANHOLE (TYPE B) REVERSED
		SEWER MANHOLE (TYPE C-SINGLE DROP)
		SEWER MANHOLE (TYPE C-DOUBLE DROP)
		SEWER MANHOLE TUMBLING BASIN
◎XX-Y		MANHOLE XX- (CO=CONCRETE, LI=LINED, BR=BRICK), Y-(F= FILL)
○XX-Y		CATCH BASIN XX- (CO=CONCRETE, LI=LINED, BR=BRICK), Y-(F= FILL)
		STRUCTURE REMOVAL
		INLET
CB		GUTTER BOX
		D.C. - DRAIN CONNECTION-WATER MAIN QUALITY PIPE
		D.C. - DRAIN CONNECTION-PR CB
		D.C. - DRAIN CONNECTION-EX CB
		DIRECTION OF FLOW
		SUMMIT
12.5		ORDINANCE GRADE
		SIGN
		BUSH
XX"		TREE
≥ 12"		EVERGREEN TREE
		FIRE HYDRANT
		CITY LIGHT POLE
		TRAFFIC SIGNAL ON CITY LIGHT POLE
		UTILITY POLE
		TRAFFIC SIGNAL
		CONTROLLER BOX
		UTILITY VAULT
		SOIL BORING

COMED NOTES

CITY CONTRACTORS ARE REQUESTED TO TAKE EXTRA PRECAUTIONS WHEN WORKING NEAR COMED OVERHEAD WIRES. THESE WIRES ARE NOT INSULATED, TO HAVE THEM INSULATED PLEASE CONTACT 1-800-EDISON-1 AND CONNECT WITH "FACILITY PROTECTION" TO PUT IN A SERVICE REQUEST PRIOR TO CONSTRUCTION START.

COMED REQUESTS THAT THE CITY CONTRACTORS PROTECT ALL EXISTING COMED MANHOLES AND CONDUITS WHEN CROSSING, ADJACENT TO OR IN THE NEAR VICINITY DURING THE DIRECTIONAL BORING OR EXCAVATION PROCESS. DIG TEST HOLES AND HAND DIG WHEN WITHIN 5 FEET OR CROSSING FACILITIES TO ASSURE COMED FACILITIES ARE NOT DAMAGED. ASSUME ALL CONDUITS ARE LIVE.

ANY ISSUES OR WORK NEEDED WHEN CROSSING OR ADJACENT TO ANY COMED ASSETS, PLEASE CONTACT CARLA STRUNGA @ 815.409.8622 OR VIA EMAIL @ CARLA.STRUNGA@COMED.COM AT LEAST SIX WEEKS PRIOR TO CONSTRUCTION START.

PEOPLES GAS NOTES

USE EXTREME CAUTION NEAR ALL GAS FACILITIES DURING CONSTRUCTION AND RELATED EXCAVATION ACTIVITIES. HAND DIG OR NON-INVASIVE EXCAVATION IS REQUIRED TO FIELD VERIFY THE HORIZONTAL AND VERTICAL LOCATION OF GAS FACILITIES PRIOR TO CROSSING AND WORKING WITHIN 3 FEET OF ALL GAS FACILITIES. A MINIMUM OF 3' HORIZONTAL EDGE TO EDGE CLEARANCE IS REQUIRED FOR GAS FACILITIES WITH DIAMETERS OF 16" OR SMALLER, AND 5FT EDGE TO EDGE CLEARANCE FOR GAS FACILITIES WITH DIAMETERS 18" AND LARGER. MAINTAIN A MINIMUM OF 18 EDGE TO EDGE VERTICAL CLEARANCE WHEN CROSSING GAS FACILITIES 16" OR LESS IN DIAMETER, AND 24" EDGE TO EDGE VERTICAL CLEARANCE WHEN CROSSING 18" AND LARGER DIAMETER GAS FACILITIES. CONTACT 811 CHICAGO/DIGGER 312-744-7000 FOR LOCATES 48 HOURS PRIOR TO START OF CONSTRUCTION.

THE USE OF CONCRETE, FLOW FILL, OR THE LIKE IS PROHIBITED WITHIN 24 INCHES OF ALL GAS FACILITIES, NOR SHALL IT ENCASE ANY GAS FACILITY. A BUFFER OF 24" SAND IS TO BE USED BETWEEN FLOW FILL AND ALL GAS FACILITIES. A MINIMUM OF 6 FA-02 OR FM-02 SAND SHALL BE USED WHEN BACKFILLING OTHER MATERIALS AROUND ANY EXPOSED GAS FACILITY. CONTRACTOR EXPOSING GAS FACILITY IS RESPONSIBLE FOR PROVIDING THE SAND. ANY DAMAGES TO PEOPLES GAS FACILITIES SHALL BE THE RESPONSIBILITY OF THE INSTALLING UTILITY AND THEIR CONTRACTOR(S).

STANDARD SYMBOLS

EX	PR	
		PARKING METER
		"L" COLUMN
		MAIL BOX
	+	CUT CROSS IN CONCRETE
		DRY WEATHER WATER SURFACE
		PAY & DISPLAY PARKING METER BOX
		WATER MAIN CUT & CAP
		WATER METER
	Ⓦ	WATER VAULT
		WATER SERVICE VALVE
		WATER BUFFALO BOX
		GAS BUFFALO BOX
		GAS METER
		ELEC. METER
		GAS SERVICE VALVE
		CITY ELEC MH
		COMED MH
		GAS MH
		TELECOM MH
		TELECOM VAULT
		CITY ELEC. VAULT
		COMED VAULT
		GAS VAULT
		ADA DETECTABLE TILE
		THRUST BLOCK
		WATER MAIN SUPPORT TYPE I, A or B, (BY OTHERS)
		WATER MAIN SUPPORT, TYPE II, (BY OTHERS)
		WATER MAIN SUPPORT, TYPE III, (BY OTHERS)

STANDARD LINE TYPES

10" SEWER	ABANDONED SEWER
12" G 12"	EXISTING GAS
16" W 16"	EXISTING WATER
A A A	EXISTING AERIAL
L L L	EXISTING BURIED CABLE
CTV CTV CTV	EXISTING CABLE TV
E E E	EXISTING CITY ELECTRIC
ComEd ComEd	EXISTING COMED
FO FO FO	EXISTING FIBER OPTICS
F&P F&P F&P	EXISTING FIRE AND POLICE
O O	EXISTING OIL
T T T	EXISTING TELEPHONE
	EXISTING SEWER
	PROPOSED SEWER
	EXISTING BUILDING LINE
	FENCE
	BURIED RAILROAD TRACKS
	EXISTING ROW LINE
54+00	BASE LINE

CALL 866-556-6002 IMMEDIATELY FOR ANY DAMAGES TO THE GAS FACILITIES. VERTICAL ADJUSTMENTS REQUIRED FOR VALVE BASIN FRAMES, COVERS, GAS SHUT-OFF VALVES, ROADWAY BOXES SHALL BE COMMUNICATED TO JACIE SPUDIC, PLANNING-PERMIT GROUP, JACIE.SPUDIC@PEOPLESGASDELIVERY.COM, 4 WEEKS PRIOR TO THE START OF RESTORATION FOR PLANNING & SCHEDULING. ALL GAS FACILITIES ARE TO BE MAINTAINED.

GENERAL NOTES

1. UNLESS OTHERWISE SHOWN ON THE PLANS, OR ORDERED BY THE COMMISSIONER, SOLID LIDS MUST BE PLACED ON ALL SEWER MANHOLES, EXCEPT AT STREET INTERSECTIONS.

2. LOCATE AND RECONNECT ALL LIVE DRAINS TO NEW SEWER.

3. SEE OUC SUBMITTAL FOR GEOTECHNICAL INFORMATION AND TRENCHING EXCAVATION EXCEEDING 12 FEET DEEP.

4. A PERMIT MUST BE OBTAINED FROM THE CITY OF CHICAGO, DEPARTMENT OF WATER MANAGEMENT FOR ANY UNDERGROUND SEWER WORK INCLUDING ADJUSTMENT OF SEWER STRUCTURES AND REMOVAL/REPLACEMENT OF FRAMES AND LIDS. THE PERMIT MUST BE OBTAINED BY AND THE WORK MUST BE PERFORMED BY A LICENSED DRAIN LAYER UNDER PERMITS AND INSPECTION OF THE CITY OF CHICAGO, DEPARTMENT OF WATER MANAGEMENT.

5. THE LOCATION AND ELEVATIONS OF EXISTING UTILITIES, WATER PIPES, SEWER, CONDUITS, LINES AND OTHER UNDERGROUND STRUCTURES SHOWN ON THE PLANS AND PROFILES HAVE BEEN OBTAINED FROM DRAWINGS AND DATA RECEIVED FROM VARIOUS SOURCES AND THE INFORMATION IS BELIEVED TO BE CORRECT BUT IS NOT GUARANTEED TO BE CORRECT. HORIZONTAL AND VERTICAL LOCATION OF ALL EXISTING UTILITIES SHALL BE FIELD VERIFIED.

6. ANY OVERHEAD 911 OR COMED FACILITIES WHICH CROSS THE SEWER TRENCH OR ARE WITHIN 20 FEET OF THE CENTERLINE OF THE SEWER ARE SHOWN ON THE PLAN AND PROFILE SHEETS.

7. ALL KNOWN WATER PIPE SERVICES OVER 2" ARE SHOWN BUT THOSE 2" AND UNDER ARE NOT SHOWN OR NOTED. THE INTERRUPTION OF WATER SERVICE LINES SHALL NOT BE ALLOWED WITHOUT PRIOR APPROVAL OF THE COMMISSIONER.

8. 48 HOURS BEFORE STARTING EXCAVATION, THE CONTRACTOR SHALL CALL DIGGER (CHICAGO UTILITY ALERT NETWORK) AT 312-744-7000 TO HAVE THE LOCATION OF EXISTING UNDERGROUND UTILITIES STAKED.

9. SEVEN (7) DAYS NOTICE MUST BE GIVEN TO THE OEMC TRAFFIC MANAGEMENT TASK FORCE PRIOR TO STARTING ANY WORK OR MAKING ANY CHANGES TO EXISTING TRAFFIC PATTERNS. DETAILS OF ANY LANE OR ROADWAY CLOSURE INCLUDING DETOUR PLANS MUST BE REVIEWED AND APPROVED BY THE OEMC TRAFFIC MANAGEMENT TASK FORCE. CONTACT 312-743-7394.

10. SEVEN (7) DAYS NOTICE MUST BE GIVEN TO CDOT PRIOR TO STARTING ANY WORK OR MAKING ANY CHANGES IN THE TRAFFIC PATTERN & DETAILS OF ANY LANE OR ROADWAY CLOSURE INCLUDING DETOUR PLANS MUST BE REVIEWED AND APPROVED BY CDOT AT 312-744-4652.

11. ALL WORK IN THE PUBLIC WAY REQUIRES A PERMIT FROM THE DEPARTMENT OF TRANSPORTATION, PERMIT DIVISION AT 312-744-4652.

12. ALL SEWER INSTALLATIONS MUST MEET IEPA SEPARATION REQUIREMENTS FOR WATER AND SEWER PIPES. ALL PROPOSED/REPLACED SEWER LATERALS FROM CATCH BASINS/INLETS, SEWER MAINS, AND PRIVATE DRAINS (COLLECTIVELY KNOWN AS "SEWER FACILITIES") THAT ARE PARALLEL TO WATER MAINS, SERVICES OR FIRE HYDRANT LEADS (COLLECTIVELY KNOWN AS "WATER FACILITIES") THAT ARE LESS THAN 18 INCHES BELOW THE WATER FACILITY AND HAVE LESS THAN 10 FEET OF HORIZONTAL SEPARATION FROM THE OUTSIDE EDGE OF THE WATER FACILITY MUST BE MADE OUT OF DUCTILE IRON/WATER MAIN QUALITY PIPE FOR 10 FEET ON EITHER SIDE OF THE OUTSIDE EDGE OF THE WATER FACILITY. ADDITIONALLY, ALL SEWER FACILITIES THAT CROSS PERPENDICULARLY BELOW WATER FACILITIES WITH LESS THAN 18 INCHES VERTICAL SEPARATION MUST BE MADE OUT OF DUCTILE IRON/WATER MAIN QUALITY PIPE FOR 10 FEET ON EITHER SIDE OF THE OUTSIDE EDGE OF THE WATER FACILITY. IF ANY SEWER FACILITY CROSSES PERPENDICULARLY ABOVE A WATER FACILITY, THEN THE SEWER FACILITY SHALL BE AT LEAST 18 INCHES ABOVE THE WATER FACILITY AND THE SEWER FACILITY MUST MADE OUT OF DUCTILE IRON/WATER MAIN QUALITY PIPE FOR 10 FEET ON EITHER SIDE OF THE OUTSIDE EDGE OF THE WATER FACILITY. SEWER LATERALS THAT REQUIRE DUCTILE IRON/WATER MAIN QUALITY PIPE SHALL BE DUCTILE IRON/WATER MAIN QUALITY PIPE FROM THE CATCH BASIN TO A POINT 10 FEET BEYOND THE EDGE OF THE WATER FACILITY.

13. THESE PLANS AND THE CITY OF CHICAGO SPECIFICATIONS, BOOKS 1,2,&3, GOVERN THE CONSTRUCTION OF THIS PROJECT.

SPECIAL NOTES - FOR CONTRACTORS

1. THE CONTRACTOR SHALL MAINTAIN ACCESS TO PRIVATE PROPERTIES DURING THE CONSTRUCTION OR REMOVAL OPERATIONS. BUSINESS PROPERTY OWNERS SHALL BE NOTIFIED 72 HOURS IN ADVANCE OF CONSTRUCTION OPERATIONS WHICH MAY AFFECT THEIR DAILY SCHEDULES. THE CONTRACTOR SHALL COORDINATE WORK THROUGH THE RESIDENT ENGINEER TO AVOID ANY UNDUE INCONVENIENCE TO LOCAL BUSINESSES.

2. THE CONTRACTOR MUST INSTALL FLOW RESTRICTORS IN ALL EXISTING/PROPOSED CATCH BASINS WITHIN THE PROJECT LIMITS (AREA OF PAVEMENT RESURFACING) IN ACCORDANCE WITH DWM STANDARDS.

3. THE CONTRACTOR IS RESPONSIBLE FOR THE COST OF REPLACEMENT OF ANY BENCH MONUMENT DAMAGED OR DESTROYED DURING CONSTRUCTION. WHERE SECTION OR SUBSECTION MONUMENTS ARE ENCOUNTERED, THE COMMISSIONER SHALL BE NOTIFIED BEFORE SUCH MONUMENTS ARE REMOVED. THE CONTRACTOR SHALL PROTECT AND CAREFULLY PRESERVE ALL PROPERTY MARKERS AND MONUMENTS UNTIL THE ENGINEER, AN AUTHORIZED SURVEYOR, OR AGENT HAS WITNESSED OR OTHERWISE REFERENCED THEIR LOCATION.

4. THE CONTRACTOR SHALL VERIFY THE EXACT LOCATION OF ALL UTILITIES THAT MAY INTERFERE WITH CONSTRUCTION OPERATIONS, AND SHALL REPORT TO THE COMMISSIONER ANY OMISSIONS AND DIFFERENCES FROM THE LOCATIONS SHOWN ON THE PLANS. THE COST OF THIS WORK WILL BE CONSIDERED INCIDENTAL TO THE CONTRACT.

5. CONCRETE RESTORATION SHALL FOLLOW NO MORE THAN 660 FEET BEHIND THE COMPLETED SEWER OR LENGTH AS DETERMINED BY THE COMMISSIONER.

PERCENT COMPLETE	DATE
30	01-14-19
60	04-19-19
75	08-02-19
90	09-23-19
100	11-09-20
BULLETIN	

CITY OF CHICAGO
DEPARTMENT OF WATER MANAGEMENT
BUREAU OF ENGINEERING SERVICES

LOCATION / INDEX MAP
GENERAL / SPECIAL NOTES
LEGEND

DRAWN:
DESIGNED:
CHECKED:
REVIEWED:

OUC EFP-106072

1 OF 30

PN 7445

$FILEL$
$DATE$

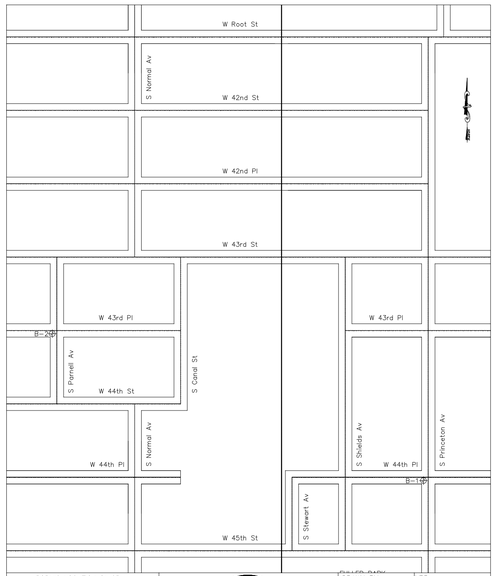

BORING LOCATION DIAGRAM

Geotechnical Investigation
for
TOR #20-02 Sewer Improvements
City of Chicago DOMM Project No. 7445
Chicago, Illinois

Proposed Sewer

O'BRIEN & ASSOCIATES, INC.
CONSULTING ENGINEERS
766 W. ALGONQUIN RD./ARLINGTON HTS., IL 60005
(847)388-1441 * FAX(847) 388-2376

DRAWN BY	VPB
APPROVED BY	DOB
DATE	March 19, 2019
JOB No.	19014
SCALE	Not To Scale

© O'BRIEN & ASSOCIATES, INC.

LOG OF BORING NO. B-2

BORING LOCATION
27.0' West of Parnell Avenue Centerline
6.0' South of 43rd Place Centerline

PROJECT DESCRIPTION
TOR #18-13 Sewer Improvements, City of Chicago DOMM
Project No. 7445, Chicago, Illinois

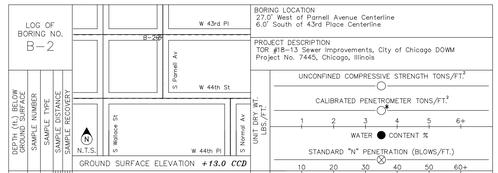

DEPTH (ft) BELOW GROUND SURFACE	SAMPLE NUMBER	SAMPLE TYPE	SAMPLE STRENGTH	SAMPLE RECOVERY	UNIT DRY WT. (lbs./ft.³)	GROUND SURFACE ELEVATION +13.0 CCD
	1	AS				3" ASPHALT, 6" CONCRETE
	2	SS				SANDY SILT–brown & gray– very loose to loose (SP/SM)
5.0	3	SS				
	4	SS				*Proposed Invert Elev. 24"ø Sewer Pipe: +2.2 CCD*
10.0	5	SS				
	6	SS				SANDY SILT–gray– very loose (SP/SM)
15.0	7	SS			99	LEAN CLAY–gray– medium stiff (CL) wet to –21.0'
	8	SS			101	
20.0	9	SS			101	
	10	SS			107	
25.0	11	SS			106	
	12	SS			118	LEAN CLAY–gray– stiff (CL)
30.0	13	SS			112	

UNCONFINED COMPRESSIVE STRENGTH TONS/FT.²
CALIBRATED PENETROMETER TONS/FT.²
1 2 3 4 5 6+
WATER ● CONTENT %
STANDARD "N" PENETRATION (BLOWS/FT.)
10 20 30 40 50 60+

END OF BORING

WATER LEVEL OBSERVATIONS	
Water Level While Drilling –8.0'	▼
Water Level After Boring –8.0'	▽
	▽

O'BRIEN & ASSOCIATES, INC.
CONSULTING ENGINEERS
766 W. ALGONQUIN RD./ARLINGTON HTS., IL 60005
(847)388-1441 * FAX(847) 388-2376

BORING STARTED	March 13, 2019		
BORING COMPLETED	March 13, 2019		
RIG	D-25	FOREMAN	PR
DRAWN	VPB	APPROVED	DOB
JOB No.	19014	SHEET	1 OF 1

© O'BRIEN & ASSOCIATES, INC.

LOG OF BORING NO. B-1

BORING LOCATION
33.0' West of Princeton Avenue Centerline
5.0' South of 44th Place Centerline

PROJECT DESCRIPTION
TOR #20-02 Sewer Improvements, City of Chicago DOMM
Project No. 7445, Chicago, Illinois

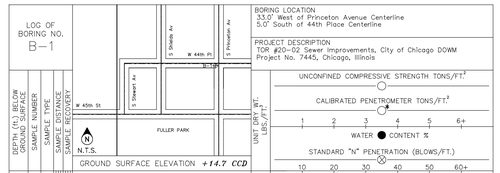

DEPTH (ft) BELOW GROUND SURFACE	SAMPLE NUMBER	SAMPLE TYPE	SAMPLE STRENGTH	SAMPLE RECOVERY	UNIT DRY WT. (lbs./ft.³)	GROUND SURFACE ELEVATION +14.7 CCD
	1	AS				4" ASPHALT, 9" CONCRETE
	2	SS				SAND–black–loose (FILL) wet
5.0	3	SS				Fine to SAND to SILTY SAND–brown– medium dense (SP)
	4	SS				
10.0	5	SS				SANDY SILT–gray– loose (ML)
	6	SS				*Proposed Invert Elev. 24"ø Sewer Pipe: +3.6 CCD* wet
15.0	7	SS				SILT–gray– loose to very loose (ML) wet
	8	SS				
20.0	9	SS			110	LEAN CLAY–gray– medium stiff to stiff (CL)
	10	SS			109	*Torvane @ –21.0' Shear Strength = 1,430psf*
25.0	11	SS			106	*Proposed Invert Elev. Tumbling Basin: –8.0 CCD*

UNCONFINED COMPRESSIVE STRENGTH TONS/FT.²
CALIBRATED PENETROMETER TONS/FT.²
1 2 3 4 5 6+
WATER ● CONTENT %
STANDARD "N" PENETRATION (BLOWS/FT.)
10 20 30 40 50 60+
0.88
0.71

CONTINUED ON FOLLOWING PAGE

WATER LEVEL OBSERVATIONS	
Water Level While Drilling –8.0'	▼
Water Level After Boring –8.0'	▽
	▽

O'BRIEN & ASSOCIATES, INC.
CONSULTING ENGINEERS
766 W. ALGONQUIN RD./ARLINGTON HTS., IL 60005
(847)388-1441 * FAX(847) 388-2376

BORING STARTED	September 25, 2018		
BORING COMPLETED	September 25, 2018		
RIG	D-25	FOREMAN	PR
DRAWN	VPB	APPROVED	DOB
JOB No.	18054	SHEET	1 OF 2

© O'BRIEN & ASSOCIATES, INC.

LOG OF BORING NO. B-1

BORING LOCATION
33.0' West of Princeton Avenue Centerline
5.0' South of 44th Place Centerline

PROJECT DESCRIPTION
TOR #20-02 Sewer Improvements, City of Chicago DOMM
Project No. 7445, Chicago, Illinois

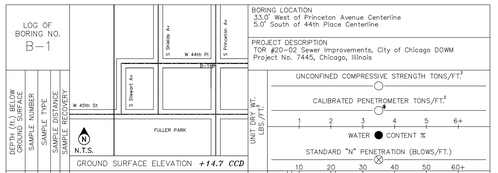

DEPTH (ft) BELOW GROUND SURFACE	SAMPLE NUMBER	SAMPLE TYPE	SAMPLE STRENGTH	SAMPLE RECOVERY	UNIT DRY WT. (lbs./ft.³)	GROUND SURFACE ELEVATION +14.7 CCD
	12	SS			109	LEAN CLAY–gray– medium stiff to stiff (CL)
						Torvane @ –27.0' Shear Strength = 970psf
30.0	13	SS			108	
	14	SS			112	
35.0	15	SS			117	SILTY CLAY–gray– very stiff (CL/ML)
	16	SS			132	LEAN CLAY–gray– hard (CL)
40.0	17	SS			131	
	18	SS				Driller's Obsertvation: possible bedrock
45.0						END OF BORING

UNCONFINED COMPRESSIVE STRENGTH TONS/FT.²
CALIBRATED PENETROMETER TONS/FT.²
1 2 3 4 5 6+
WATER ● CONTENT %
STANDARD "N" PENETRATION (BLOWS/FT.)
10 20 30 40 50 60+
0.88
0.86
75/8"
12"
75/8"
50/0.5'
SPT-25

WATER LEVEL OBSERVATIONS	
Water Level While Drilling –8.0'	▼
Water Level After Boring –8.0'	▽
	▽

O'BRIEN & ASSOCIATES, INC.
CONSULTING ENGINEERS
766 W. ALGONQUIN RD./ARLINGTON HTS., IL 60005
(847)388-1441 * FAX(847) 388-2376

BORING STARTED	September 25, 2018		
BORING COMPLETED	September 25, 2018		
RIG	D-25	FOREMAN	PR
DRAWN	VPB	APPROVED	DOB
JOB No.	18054	SHEET	2 of 2

© O'BRIEN & ASSOCIATES, INC.

PERCENT COMPLETE	DATE
30	01-14-19
60	04-19-19
75	08-02-19
90	09-23-19
100	11-09-20
BULLETIN	

CITY OF CHICAGO
DEPARTMENT OF WATER MANAGEMENT
BUREAU OF ENGINEERING SERVICES

SOIL BORINGS

DRAWN:	
DESIGNED:	
CHECKED:	
REVIEWED:	
OUC EFP-106072	
2 OF 30	
PN 7445	

$FILE$
$DATE$

CITY OF CHICAGO BENCH MARK NO. 413 ELEV.=13.398
9.8' SOUTH OF THE NORTH LINE OF W 38TH PL; 23.3' WEST OF THE WEST LINE OF THE FIRST ALLEY WEST OF ASHLAND AV

TEMPORARY BENCHMARK "J" ELEV.=13.84
CUT CROSS ON EASTERLY EDGE OF ELECTRIC MANHOLE SOUTH OF W 45TH ST

TEMPORARY BENCHMARK "H" ELEV.=14.11
CUT CROSS ON WESTERLY FLANGE OF FIRE HYDRANT AT SOUTHWEST CORNER OF W 44TH PL AND S SHIELDS AV

TEMPORARY BENCHMARK "G" ELEV.=15.40
CUT CROSS ON NORTHERLY FLANGE OF FIRE HYDRANT AT SOUTHWEST CORNER OF E W 44TH PL AND S PRINCETON AV

TEMPORARY BENCHMARK "F" ELEV.=14.10
CUT CROSS ON SOUTHERLY FLANGE OF FIRE HYDRANT LOCATED OPPOSITE ℄ OF S WALLACE ST, APPROX 8' NORTH OF W 43RD ST

CONTROL POINT NO. 105 ELEV.=13.14
CUT CROSS ON SOUTHWEST CORNER OF W 43RD ST AND S PARNELL AV

CONTROL POINT NO. 106 ELEV.=13.42
CUT CROSS ON NORTHWEST CORNER OF W 43RD ST AND S WALLACE ST

CONTROL POINT NO. 107 ELEV.=14.08
CUT CROSS ON SOUTWEST CORNER OF W 44TH PL AND S PRINCETON AV

CONTROL POINT NO. 108 ELEV.=12.59
CUT CROSS ON SOUTHWEST CORNER OF W 44TH PL AND S SHIELDS AV

CONTROL POINT NO. 109 ELEV.=13.69
CUT CROSS ON SOUTHWEST CORNER OF W 45TH ST AND S SHIELDS AV

ALIGNMENT STATION TABLE

STATION	ELEVATION	DESCRIPTION
10+00	13.922	CUT 'X'
11+00	14.213	CUT 'X'
12+00	13.537	CUT 'X'
13+00	13.214	CUT 'X'
14+00	13.229	CUT 'X'
20+00	12.614	CUT 'X'
21+00	13.282	CUT 'X'
22+00	13.303	CUT 'X'
23+00	13.445	CUT 'X'
24+00	13.758	CUT 'X'
24+75	13.444	CUT 'X'
60+01	12.380	CUT 'X'
61+00	12.287	CUT 'X'
62+00	12.513	CUT 'X'
63+00	12.701	CUT 'X'
64+00	12.773	CUT 'X'
64+50	12.899	CUT 'X'

NOTE:
1. ALL ELEVATIONS REFER TO THE CITY OF CHICAGO DATUM. ELEVATIONS SHOWN ON PLANS ARE BASED ON CHICAGO CITY DATUM, WHICH IS 579.88 FEET ABOVE MEAN SEA LEVEL, 1935 ADJUSTMENT.

2. ELEVATIONS SHOWN ON ALIGNMENT TABLE MUST BE VERIFIED WITH CITY OF CHICAGO BENCHMARK.

3. WHENEVER POSSIBLE, USE A MINIMUM OF 2 TO 3 CITY STANDARD BENCHMARKS TO TIE IN TBM'S AND CONTROL POINTS.

PERCENT COMPLETE	DATE
30	01-14-19
60	04-19-19
75	08-02-19
90	09-23-19
100	11-09-20
BULLETIN	

CITY OF CHICAGO
DEPARTMENT OF WATER MANAGEMENT
BUREAU OF ENGINEERING SERVICES

BENCHMARKS AND CONTROL POINTS

DRAWN:
DESIGNED:
CHECKED:
REVIEWED:

OUC EFP-106072
4 OF 30
PN 7445

$FILE$
$DATE$

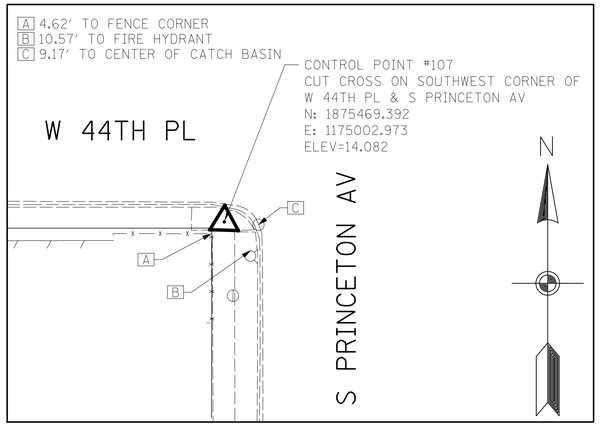

CONTROL POINT #107 TIES STA. 10+62.8, 28.1 LT

(NOT TO SCALE)

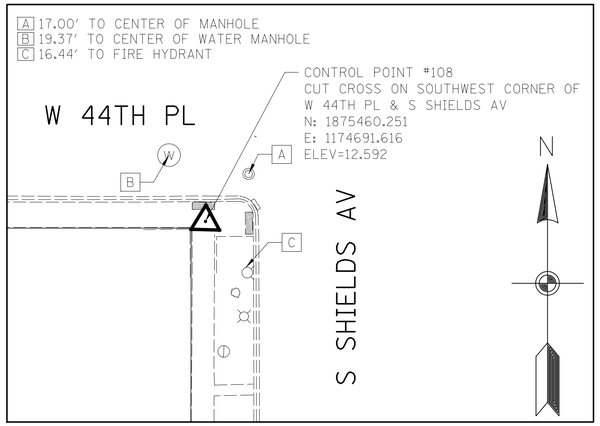

CONTROL POINT #108 TIES STA. 13+74.3, 28.0 LT

(NOT TO SCALE)

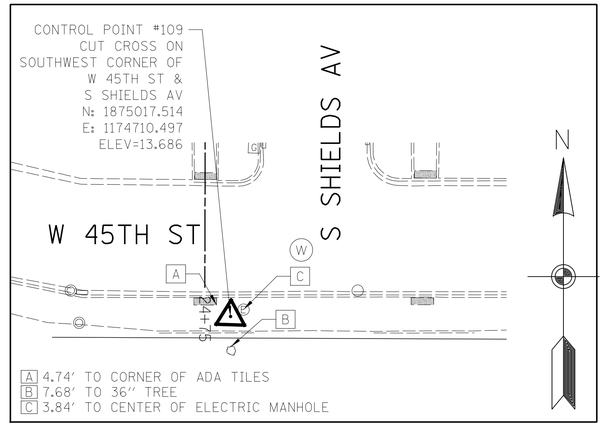

CONTROL POINT #109 TIES STA. 24+74.3, 6.8 LT

(NOT TO SCALE)

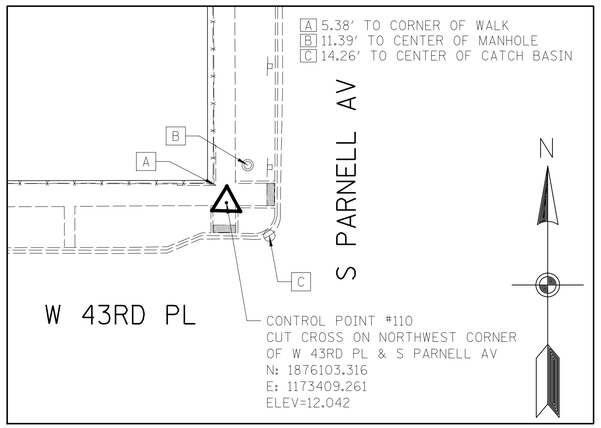

CONTROL POINT #110 TIES STA. 55+20.8, 56.7 LT

(NOT TO SCALE)

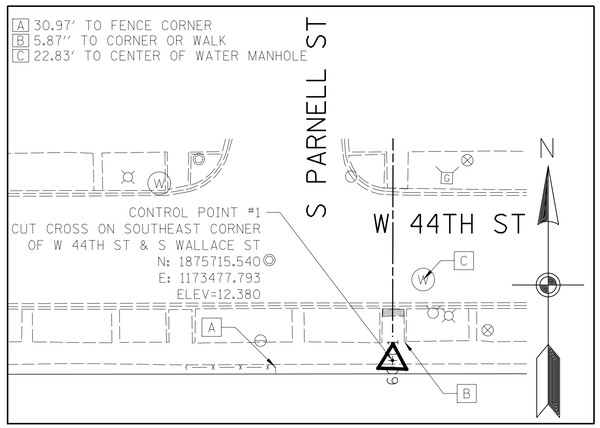

CONTROL POINT #1 TIES STA. 60+01

(NOT TO SCALE)

PERCENT COMPLETE	DATE
30	01-14-19
60	04-19-19
75	08-02-19
90	09-23-19
100	11-09-20
BULLETIN	

CITY OF CHICAGO
DEPARTMENT OF WATER MANAGEMENT
BUREAU OF ENGINEERING SERVICES

ALIGNMENT AND TIES

DRAWN:
DESIGNED:
CHECKED:
REVIEWED:

OUC EFP-106072

5 OF 30

PN 7445

$FILE$
$DATE$

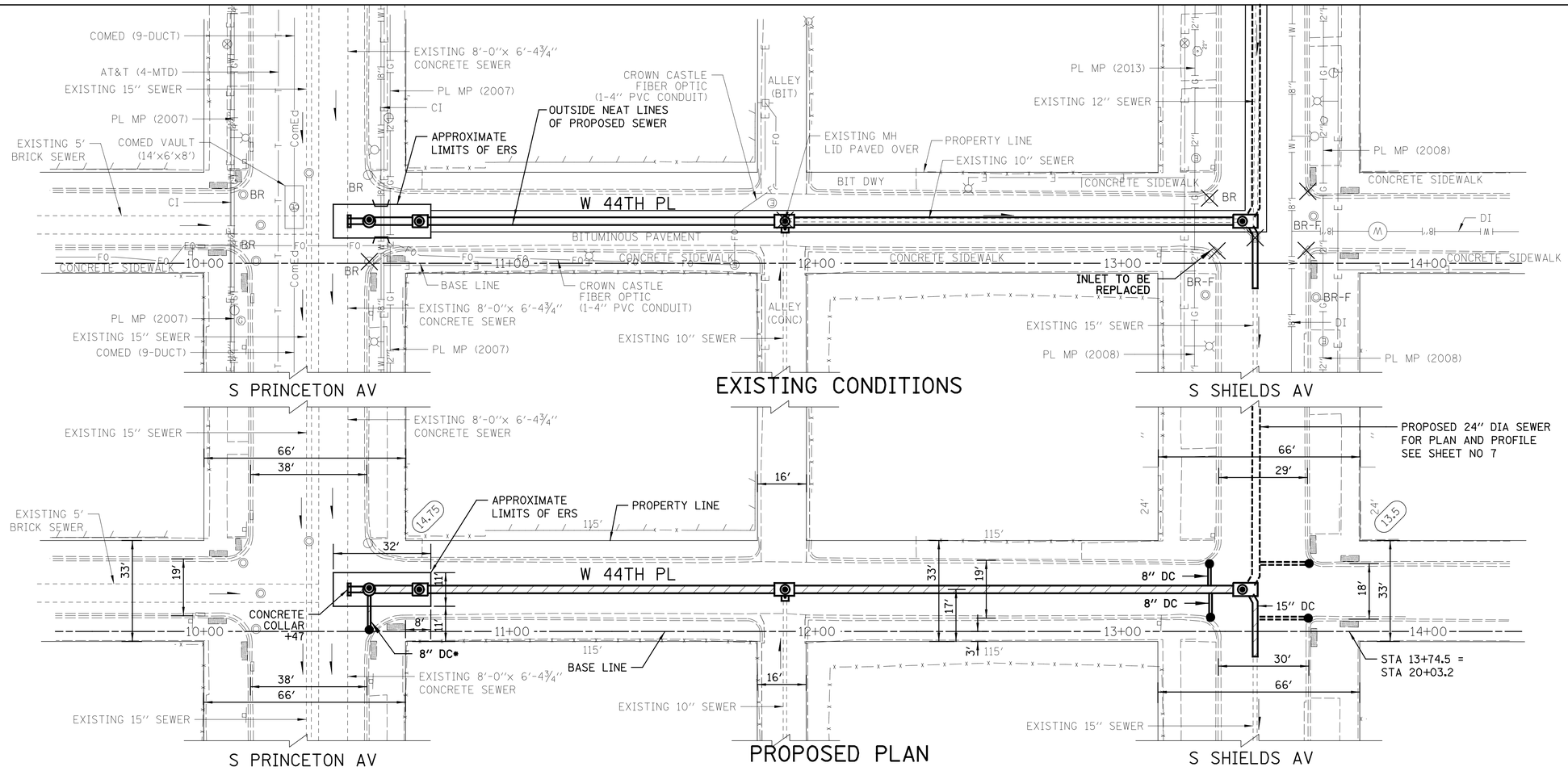

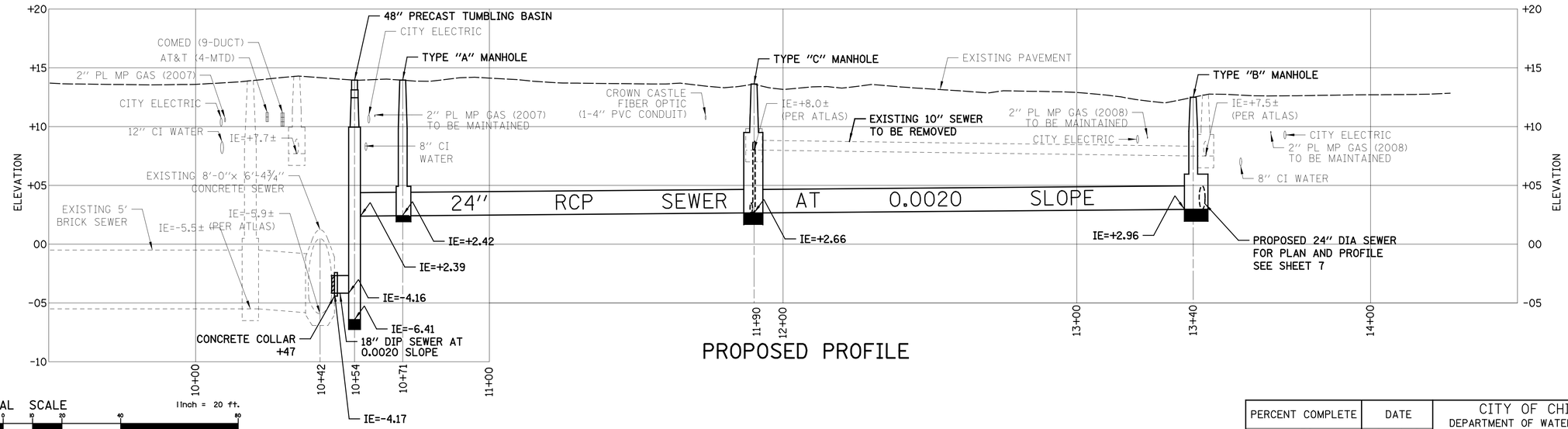

HORIZONTAL SCALE 1inch = 20 ft.

VERTICAL SCALE 1inch = 5 ft.

* NOTE: IF DC CONNECTION IS NOT IEPA COMPLIANT, THEN DC SHALL BE WATER MAIN QUALITY PIPE AND MUST MEET ALL IEPA CLEARANCE REQUIREMENTS.

PERCENT COMPLETE	DATE
30	01-14-19
60	04-19-19
75	08-02-19
90	09-23-19
100	11-09-20
BULLETIN	

CITY OF CHICAGO
DEPARTMENT OF WATER MANAGEMENT
BUREAU OF ENGINEERING SERVICES

PLAN AND PROFILE
W 44TH PL
S PRINCETON AV TO
S SHIELDS AV

DRAWN:
DESIGNED:
CHECKED:
REVIEWED:

OUC EFP-106072

6 OF 30

PN 7445

$FILEL$
$DATE$

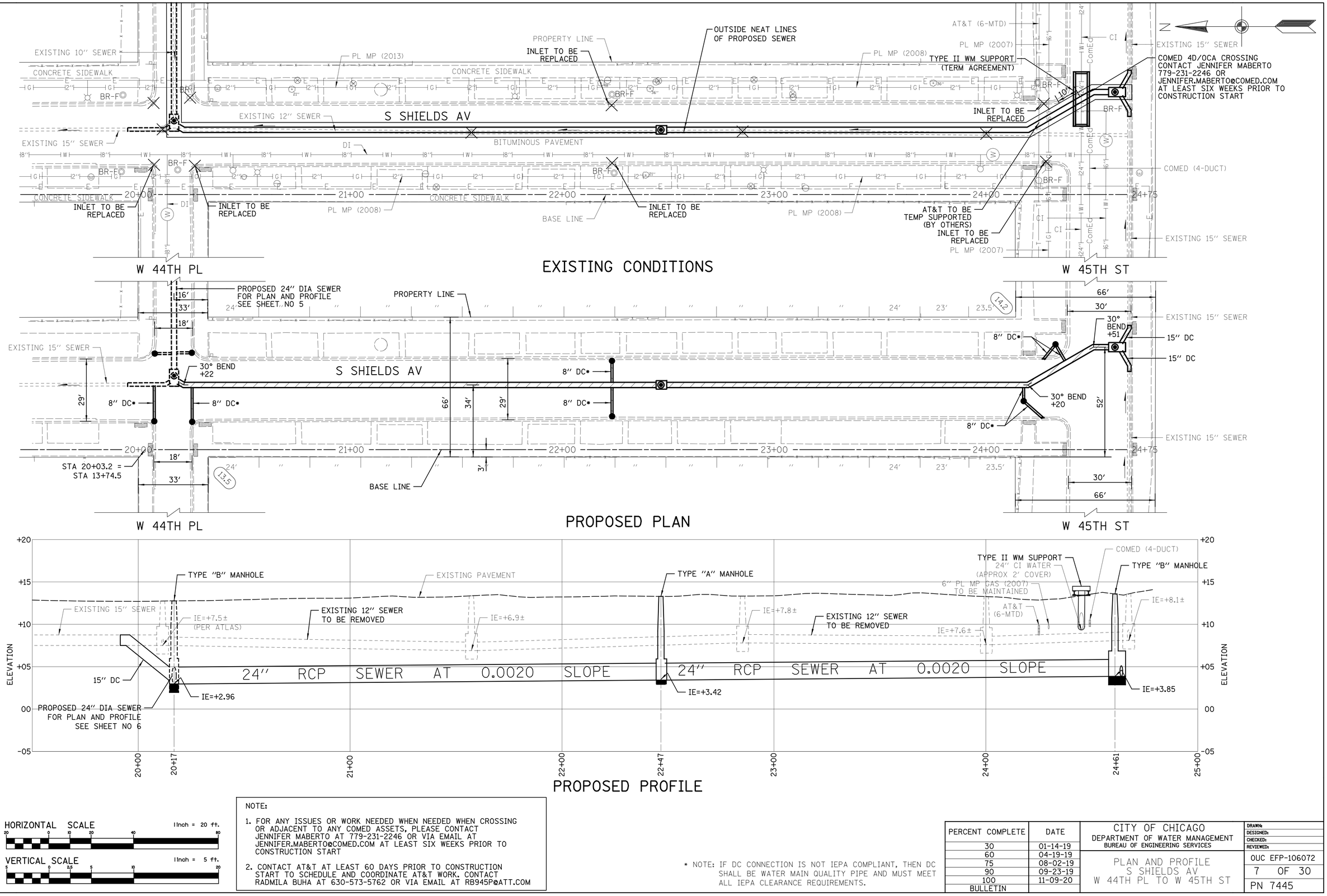

HORIZONTAL SCALE 1inch = 20 ft.

VERTICAL SCALE 1inch = 5 ft.

NOTE:

1. FOR ANY ISSUES OR WORK NEEDED WHEN NEEDED WHEN CROSSING OR ADJACENT TO ANY COMED ASSETS, PLEASE CONTACT JENNIFER MABERTO AT 779-231-2246 OR VIA EMAIL AT JENNIFER.MABERTO@COMED.COM AT LEAST SIX WEEKS PRIOR TO CONSTRUCTION START
2. CONTACT AT&T AT LEAST 60 DAYS PRIOR TO CONSTRUCTION START TO SCHEDULE AND COORDINATE AT&T WORK. CONTACT RADMILA BUHA AT 630-573-5762 OR VIA EMAIL AT RB945P@ATT.COM

* NOTE: IF DC CONNECTION IS NOT IEPA COMPLIANT, THEN DC SHALL BE WATER MAIN QUALITY PIPE AND MUST MEET ALL IEPA CLEARANCE REQUIREMENTS.

PERCENT COMPLETE	DATE
30	01-14-19
60	04-19-19
75	08-02-19
90	09-23-19
100	11-09-20
BULLETIN	

CITY OF CHICAGO
DEPARTMENT OF WATER MANAGEMENT
BUREAU OF ENGINEERING SERVICES

PLAN AND PROFILE
S SHIELDS AV
W 44TH PL TO W 45TH ST

DRAWN:
DESIGNED:
CHECKED:
REVIEWED:

OUC EFP-106072

7 OF 30

PN 7445

$FILE$
$DATE$

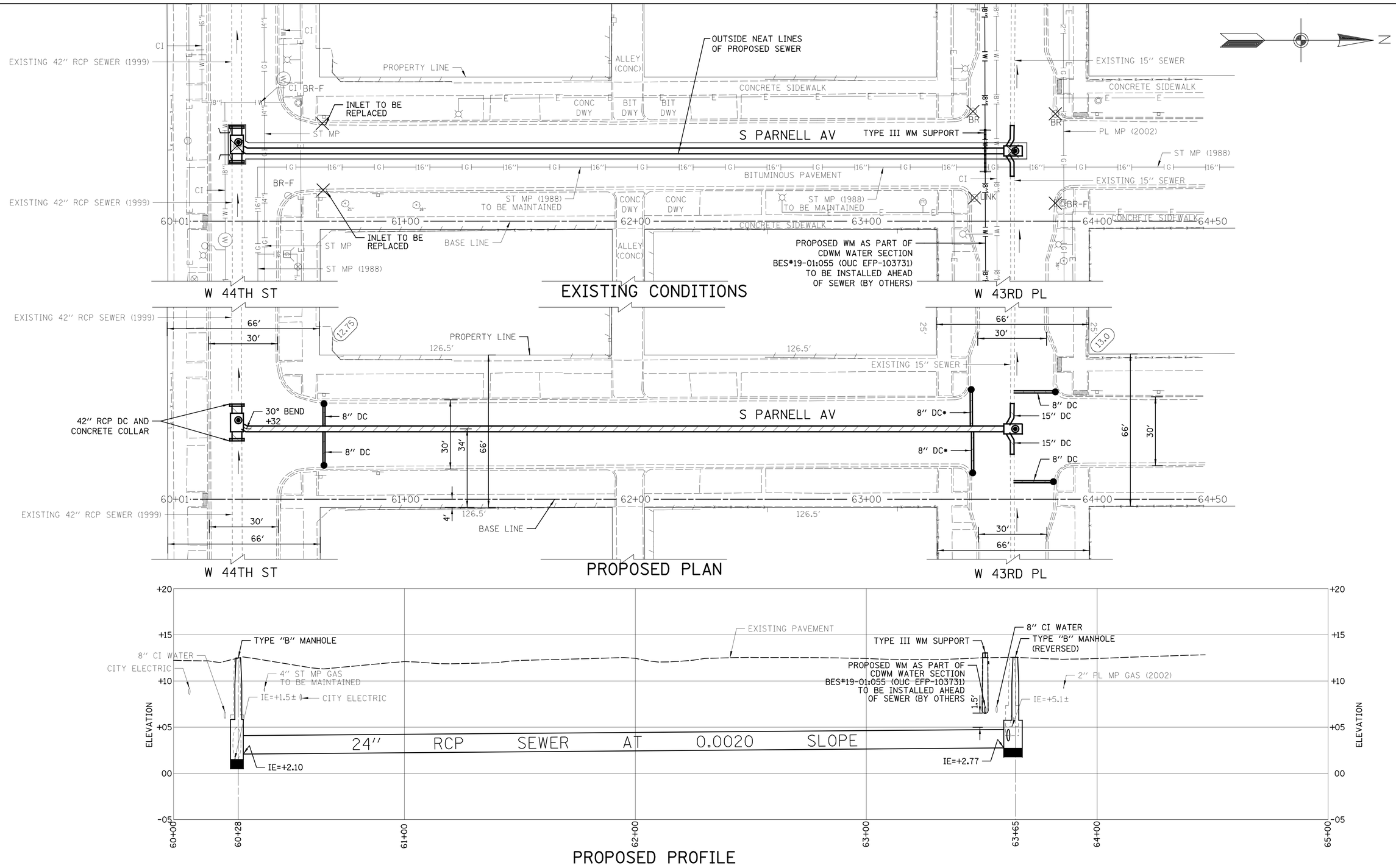

HORIZONTAL SCALE 1inch = 20 ft.

VERTICAL SCALE 1inch = 5 ft.

$FILEL$
$DATE$

* NOTE: IF DC CONNECTION IS NOT IEPA COMPLIANT, THEN DC SHALL BE WATER MAIN QUALITY PIPE AND MUST MEET ALL IEPA CLEARANCE REQUIREMENTS.

PERCENT COMPLETE	DATE
30	01-14-19
60	04-19-19
75	08-02-19
90	09-23-19
100	11-09-20
BULLETIN	

CITY OF CHICAGO
DEPARTMENT OF WATER MANAGEMENT
BUREAU OF ENGINEERING SERVICES

PLAN AND PROFILE
S PARNELL AV
W 44TH ST TO W 43RD PL

DRAWN:	
DESIGNED:	
CHECKED:	
REVIEWED:	
OUC EFP-106072	
8 OF 30	
PN 7445	

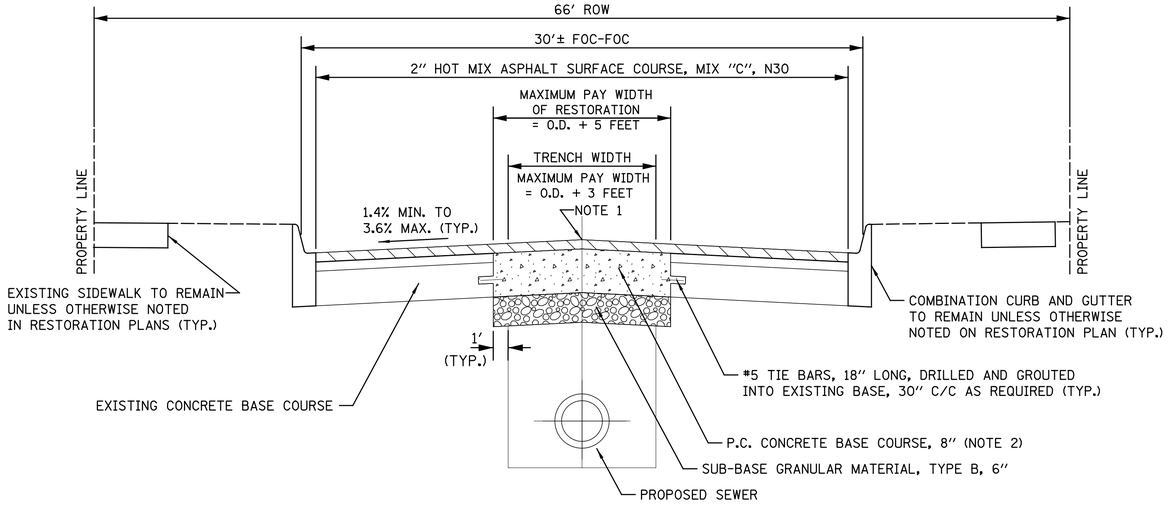

PROPOSED PARTIAL PAVEMENT RESTORATION CROSS SECTION

N.T.S.

S SHEILDS AV FROM W 44TH PL TO W 45TH ST
S PARNELL AV FROM W 44TH ST TO W 43RD PL

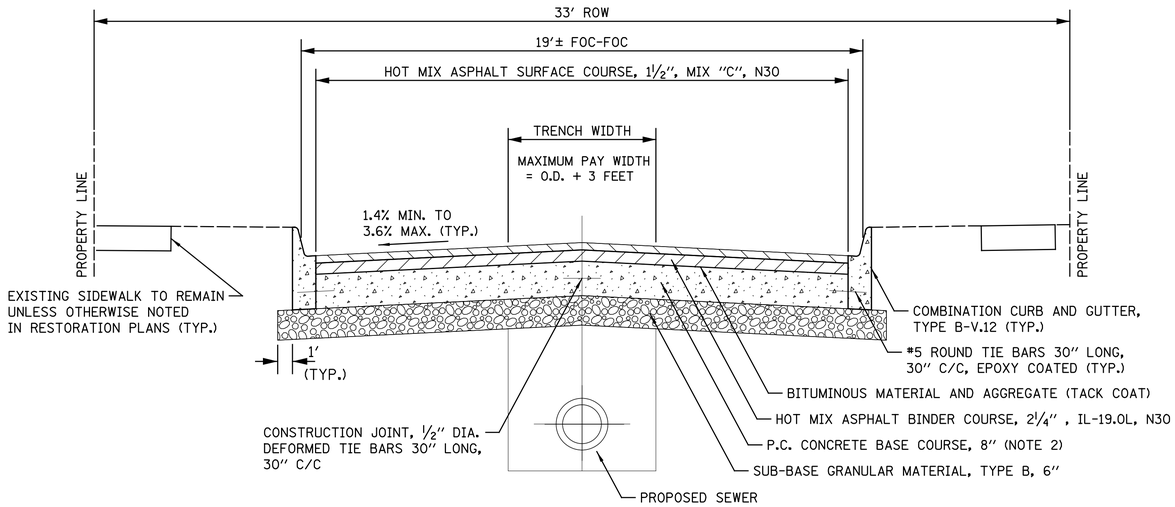

PROPOSED FULL PAVEMENT RESTORATION CROSS SECTION

N.T.S.

W 44TH PL FROM S PRINCETON AV TO S SHIELDS AV

CROSS SECTION NOTES:
1. ADJUST ROADWAY CENTERLINE ELEVATION TO ACHIEVE COMPLIANT CROSS SLOPES

2. USE P.C. CONCRETE BASE COURSE, 8″ MIN. FOR RESIDENTIAL STREETS, AND 10″ MIN. FOR ARTERIAL STREETS.

3. FOR FULL PAVEMENT RESTORATION SEE CDOT STANDARD DETAIL A-2-3A FOR JOINT LAYOUT.

4. FOR FURTHER TRENCH DETAIL INFORMATION, SEE THE SEWER TRENCH DETAIL ON STANDARD DETAIL SHEET A.1

5. TRENCH SHALL BE RESTORED TO FULL WIDTH EXCEPT THE QUANTITY FOR WHICH PAYMENT WILL BE MADE SHALL NOT EXCEED THE MAXIMUM PAY WIDTH.

PERCENT COMPLETE	DATE
30	01-14-19
60	04-19-19
75	08-02-19
90	09-23-19
100	11-09-20
BULLETIN	

CITY OF CHICAGO
DEPARTMENT OF WATER MANAGEMENT
BUREAU OF ENGINEERING SERVICES

TYPICAL SECTIONS

DRAWN:
DESIGNED:
CHECKED:
REVIEWED:

OUC EFP-106072

9 OF 30

PN 7445

$FILE$
$DATE$

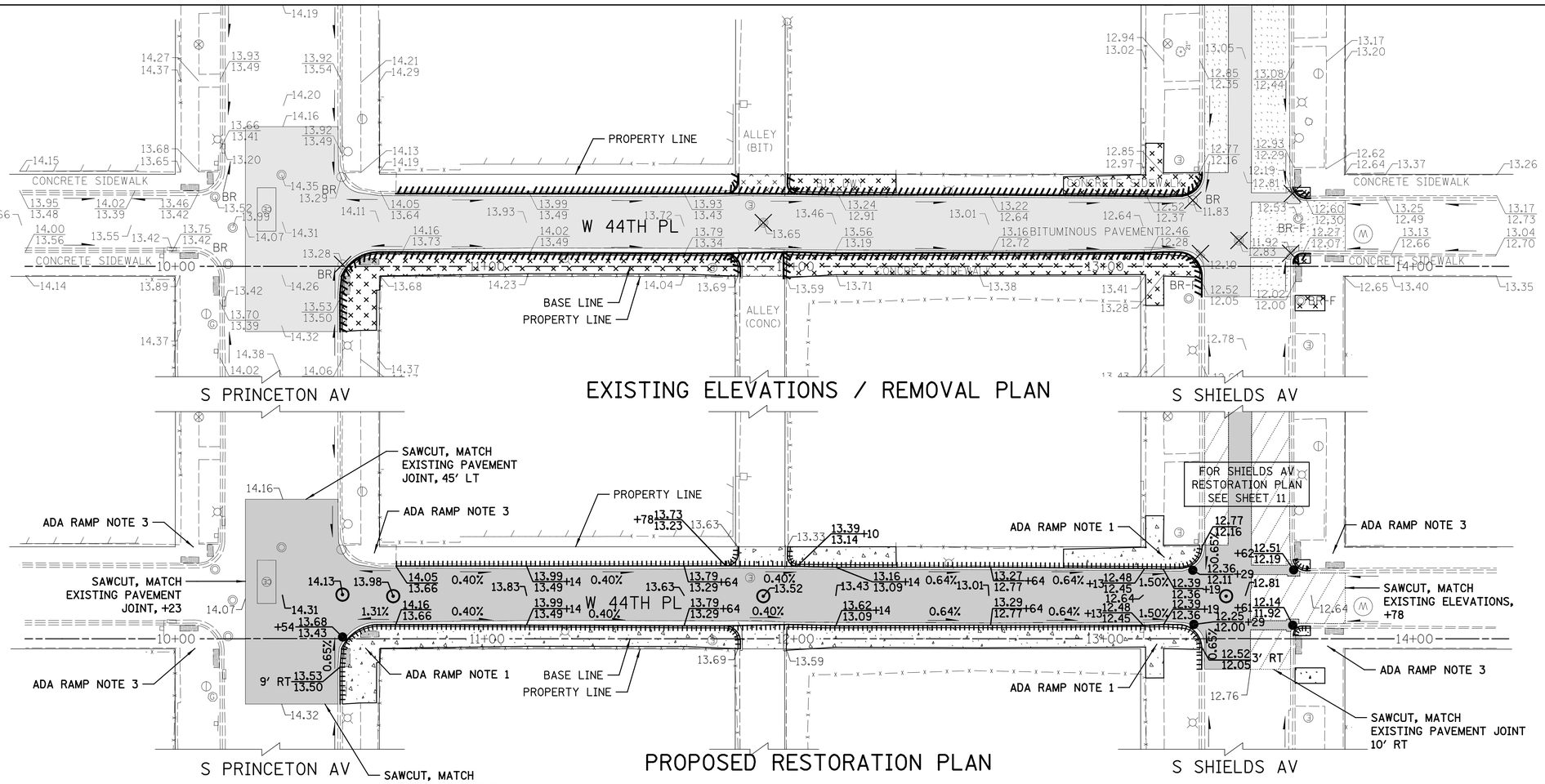

LEGEND

REMOVAL

- FULL DEPTH PAVEMENT REMOVAL
- SURFACE COURSE REMOVAL
- SIDEWALK/DRIVEWAY REMOVAL
- CURB AND GUTTER REMOVAL

PROPOSED

- FULL DEPTH PAVEMENT RECONSTRUCTION
- BITUMINOUS RESURFACING
- SIDEWALK/ DRIVEWAY/ ALLEY REPLACEMENT
- CURB AND GUTTER REPLACEMENT

CALL OUTS

- 13.41 / 13.12 — PROPOSED TOP OF CURB ELEV. / PROPOSED GUTTER ELEV.
- 13.66 — EXISTING ELEVATION
- 13.10 / 13.35 — EXISTING TOP OF CURB ELEV. / EXISTING GUTTER ELEV.
- STRUCTURE TO BE REMOVED
- A — ADJUST FRAME & LID
- PROPOSED CATCH BASIN
- PROPOSED MANHOLE
- DIRECTION OF FLOW
- SUMMIT

HORIZONTAL SCALE 1inch = 20 ft. (20 0 10 20 40 80)

VERTICAL SCALE 1inch = 5 ft. (5 0 2.5 5 10 20)

$FILE$
$DATE$

ADA RAMP NOTES

1. STANDARD DESIGN
2. SPECIAL DESIGN
3. EXISTING RAMP PASSES - DO NOT REMOVE
4. REMOVE AND REPLACE ADA DETECTABLE TILES

NOTES:

1. THE EXTENT OF PAVEMENT RESTORATION MUST NOT EXCEED THE LIMITS SHOWN IN THIS DRAWING OR AS DIRECTED BY CDOT RULES AND REGULATIONS AND AS ORDERED BY THE COMMISSIONER

2. CONSTRUCTION OF NEW PAVEMENTS, CONCRETE SIDEWALKS, CURBS, GUTTERS, ALLEY RETURNS, AND DRIVEWAYS MUST CONFORM TO THE LATEST RULES AND REGULATIONS FOR CONSTRUCTION IN THE PUBLIC WAY OF THE CHICAGO DEPARTMENT OF TRANSPORTATION.

3. SEE CHICAGO DEPARTMENT OF TRANSPORTATION ADA CONSTRUCTION STANDARDS FOR ADA RAMP DESIGN.

4. ADJUST ROADWAY CENTERLINE ELEVATION TO ACHIEVE COMPLIANT CROSS SLOPES

5. ROADWAY GRADES AND CROSS SLOPES TO PROMOTE ADEQUATE DRAINAGE AND MITIGATE WATER PONDING IN THE STREET TO BE DETERMINED IN THE FIELD DURING CONSTRUCTION. ANY CHANGE IN PARTIAL OR FULL RESTORATION SHOULD BE VERIFIED WITH DESIGN SECTION BEFORE CONSTRUCTION.

6. SAWCUT 12" BEYOND EDGE OF CONCRETE ALLEY PAVING. PAVE INFILL WITH A MINIMUM 3¾" HOT MIX ASPHALT SURFACE COURSE IL-9.5, MIX "C", N30, LOW ESAL(SEE CDOT DETAIL A-2-8)

PERCENT COMPLETE	DATE
30	01-14-19
60	04-19-19
75	08-02-19
90	09-23-19
100	11-09-20
BULLETIN	

CITY OF CHICAGO
DEPARTMENT OF WATER MANAGEMENT
BUREAU OF ENGINEERING SERVICES

FULL RESTORATION PLAN
W 44TH PL
S PRINCETON AV TO
S SHIELDS AV

DRAWN:
DESIGNED:
CHECKED:
REVIEWED:

OUC EFP-106072
10 OF 30
PN 7445

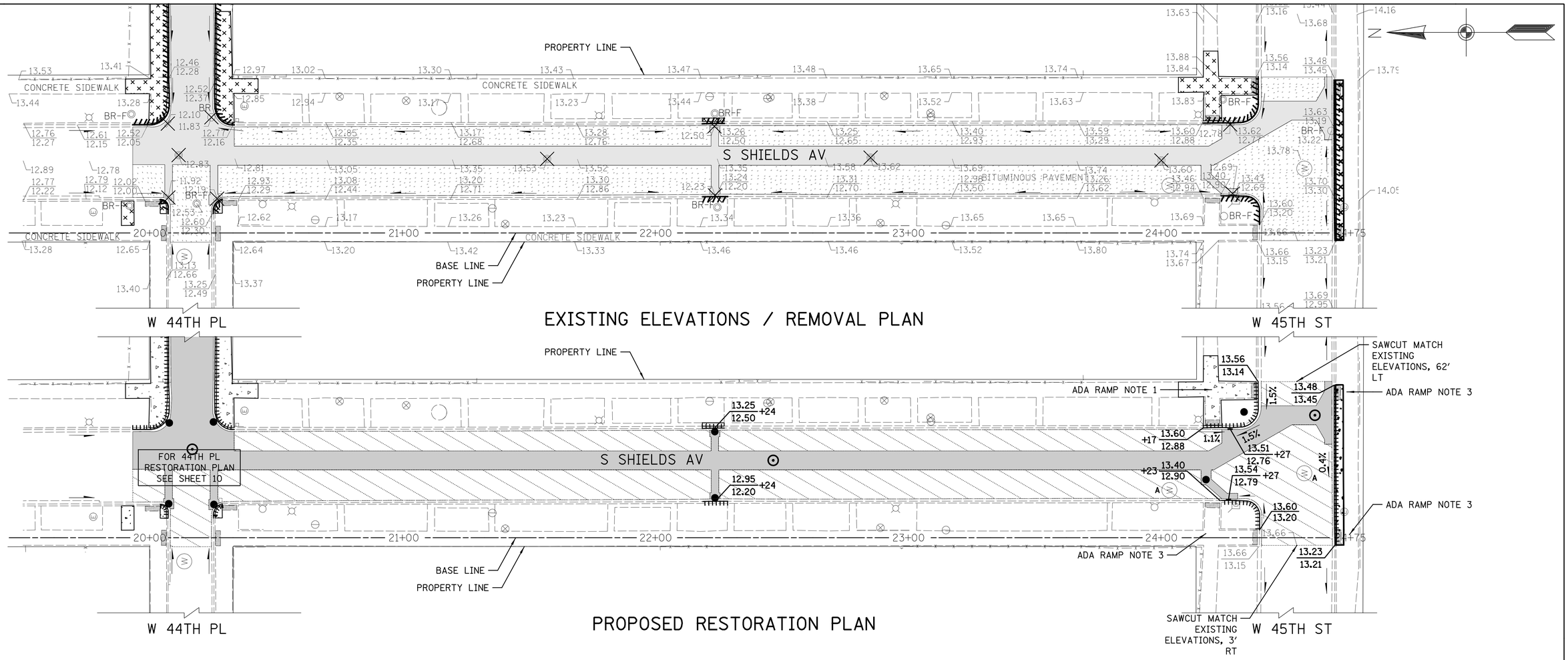

EXISTING ELEVATIONS / REMOVAL PLAN

PROPOSED RESTORATION PLAN

LEGEND

CALL OUTS

- 13.41 / 13.12 — PROPOSED TOP OF CURB ELEV. / PROPOSED GUTTER ELEV.
- 13.66 — EXISTING ELEVATION
- 13.10 / 13.35 — EXISTING TOP OF CURB ELEV. / EXISTING GUTTER ELEV.
- STRUCTURE TO BE REMOVED
- A — ADJUST FRAME & LID
- PROPOSED CATCH BASIN
- PROPOSED MANHOLE
- DIRECTION OF FLOW
- SUMMIT

REMOVAL

- FULL DEPTH PAVEMENT REMOVAL
- SURFACE COURSE REMOVAL
- SIDEWALK/DRIVEWAY REMOVAL
- CURB AND GUTTER REMOVAL

PROPOSED

- FULL DEPTH PAVEMENT RECONSTRUCTION
- BITUMINOUS RESURFACING
- SIDEWALK/ DRIVEWAY/ ALLEY REPLACEMENT
- CURB AND GUTTER REPLACEMENT

NOTES:

1. THE EXTENT OF PAVEMENT RESTORATION MUST NOT EXCEED THE LIMITS SHOWN IN THIS DRAWING OR AS DIRECTED BY CDOT RULES AND REGULATIONS AND AS ORDERED BY THE COMMISSIONER

2. CONSTRUCTION OF NEW PAVEMENTS, CONCRETE SIDEWALKS, CURBS, GUTTERS, ALLEY RETURNS, AND DRIVEWAYS MUST CONFORM TO THE LATEST RULES AND REGULATIONS FOR CONSTRUCTION IN THE PUBLIC WAY OF THE CHICAGO DEPARTMENT OF TRANSPORTATION.

3. SEE CHICAGO DEPARTMENT OF TRANSPORTATION ADA CONSTRUCTION STANDARDS FOR ADA RAMP DESIGN.

4. ADJUST ROADWAY CENTERLINE ELEVATION TO ACHIEVE COMPLIANT CROSS SLOPES

5. ROADWAY GRADES AND CROSS SLOPES TO PROMOTE ADEQUATE DRAINAGE AND MITIGATE WATER PONDING IN THE STREET TO BE DETERMINED IN THE FIELD DURING CONSTRUCTION. ANY CHANGE IN PARTIAL OR FULL RESTORATION SHOULD BE VERIFIED WITH DESIGN SECTION BEFORE CONSTRUCTION.

6. SAWCUT 12" BEYOND EDGE OF CONCRETE ALLEY PAVING. PAVE INFILL WITH A MINIMUM 3¾" HOT MIX ASPHALT SURFACE COURSE IL-9.5, MIX "C", N30, LOW ESAL(SEE CDOT DETAIL A-2-8)

HORIZONTAL SCALE 1inch = 20 ft.

VERTICAL SCALE 1inch = 5 ft.

ADA RAMP NOTES

1. STANDARD DESIGN
2. SPECIAL DESIGN
3. EXISTING RAMP PASSES - DO NOT REMOVE
4. REMOVE AND REPLACE ADA DETECTABLE TILES

PERCENT COMPLETE	DATE
30	01-14-19
60	04-19-19
75	08-02-19
90	09-23-19
100	11-09-20
BULLETIN	

CITY OF CHICAGO
DEPARTMENT OF WATER MANAGEMENT
BUREAU OF ENGINEERING SERVICES

PARTIAL RESTORATIO PLAN
S SHIELDS AV
W 44TH PL TO W 45TH ST

DRAWN:
DESIGNED:
CHECKED:
REVIEWED:

OUC EFP-106072

11 OF 30

PN 7445

$FILEL$
$DATE$

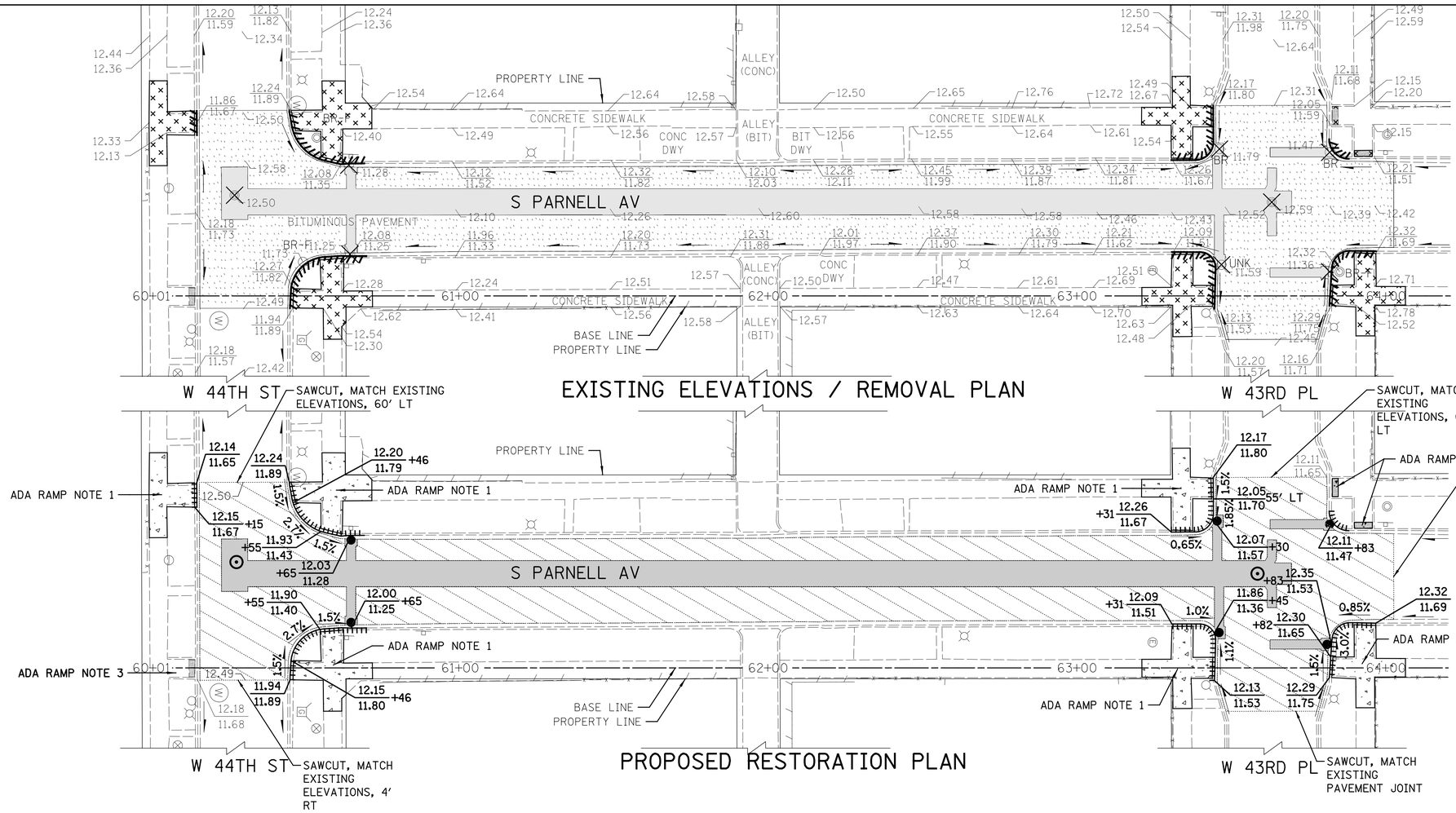

LEGEND

REMOVAL

- FULL DEPTH PAVEMENT REMOVAL
- SURFACE COURSE REMOVAL
- SIDEWALK/DRIVEWAY REMOVAL
- CURB AND GUTTER REMOVAL

PROPOSED

- FULL DEPTH PAVEMENT RECONSTRUCTION
- BITUMINOUS RESURFACING
- SIDEWALK/ DRIVEWAY/ ALLEY REPLACEMENT
- CURB AND GUTTER REPLACEMENT

CALL OUTS

- 13.41 / 13.12 — PROPOSED TOP OF CURB ELEV. / PROPOSED GUTTER ELEV.
- 13.66 — EXISTING ELEVATION
- 13.10 / 13.35 — EXISTING TOP OF CURB ELEV. / EXISTING GUTTER ELEV.
- STRUCTURE TO BE REMOVED
- A — ADJUST FRAME & LID
- PROPOSED CATCH BASIN
- PROPOSED MANHOLE
- DIRECTION OF FLOW
- SUMMIT

HORIZONTAL SCALE 1inch = 20 ft.

VERTICAL SCALE 1inch = 5 ft.

$FILEL$
$DATE$

ADA RAMP NOTES

1. STANDARD DESIGN
2. SPECIAL DESIGN
3. EXISTING RAMP PASSES - DO NOT REMOVE
4. REMOVE AND REPLACE ADA DETECTABLE TILES

NOTES:

1. THE EXTENT OF PAVEMENT RESTORATION MUST NOT EXCEED THE LIMITS SHOWN IN THIS DRAWING OR AS DIRECTED BY CDOT RULES AND REGULATIONS AND AS ORDERED BY THE COMMISSIONER

2. CONSTRUCTION OF NEW PAVEMENTS, CONCRETE SIDEWALKS, CURBS, GUTTERS, ALLEY RETURNS, AND DRIVEWAYS MUST CONFORM TO THE LATEST RULES AND REGULATIONS FOR CONSTRUCTION IN THE PUBLIC WAY OF THE CHICAGO DEPARTMENT OF TRANSPORTATION.

3. SEE CHICAGO DEPARTMENT OF TRANSPORTATION ADA CONSTRUCTION STANDARDS FOR ADA RAMP DESIGN.

4. ADJUST ROADWAY CENTERLINE ELEVATION TO ACHIEVE COMPLIANT CROSS SLOPES

5. ROADWAY GRADES AND CROSS SLOPES TO PROMOTE ADEQUATE DRAINAGE AND MITIGATE WATER PONDING IN THE STREET TO BE DETERMINED IN THE FIELD DURING CONSTRUCTION. ANY CHANGE IN PARTIAL OR FULL RESTORATION SHOULD BE VERIFIED WITH DESIGN SECTION BEFORE CONSTRUCTION.

6. SAWCUT 12" BEYOND EDGE OF CONCRETE ALLEY PAVING. PAVE INFILL WITH A MINIMUM 3¾" HOT MIX ASPHALT SURFACE COURSE IL-9.5, MIX "C", N30, LOW ESAL(SEE CDOT DETAIL A-2-8)

PERCENT COMPLETE	DATE
30	01-14-19
60	04-19-19
75	08-02-19
90	09-23-19
100	11-09-20
BULLETIN	

CITY OF CHICAGO
DEPARTMENT OF WATER MANAGEMENT
BUREAU OF ENGINEERING SERVICES

PARTIAL RESTORATION PLAN
S PARNELL AV
W 44TH ST TO W 43RD PL

DRAWN:
DESIGNED:
CHECKED:
REVIEWED:

OUC EFP-106072

12 OF 30

PN 7445

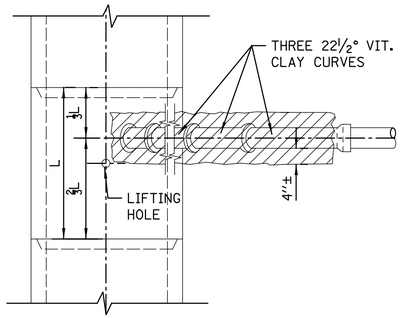

PLAN

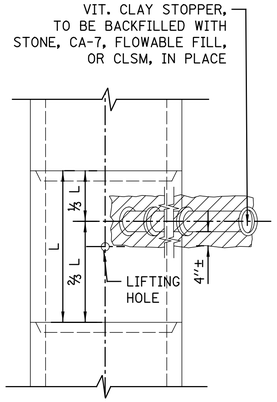

PLAN

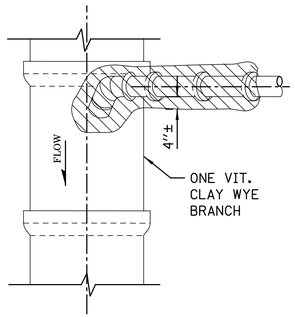

PLAN

NOTE:
PLUG TO BE COATED WITH MORTAR AND DRIVEN INTO PLACE WITH A WOODEN MALLET AND THEN SEALED WITH MORTAR.

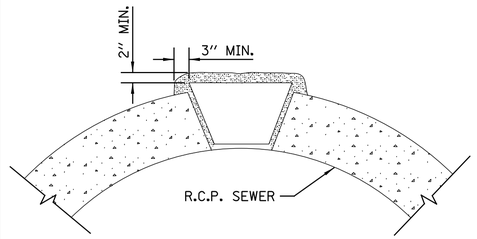

LIFTING HOLE PLUG DETAIL FOR CONCRETE PIPE

NOTE:
1. ALL PLUG MATERIALS MUST COMPLY WITH 1042.16 OF THE IDOT SSRBC.

2. LIFT HOLES ON COMBINED SEWERS ARE PROHIBITED WHEN THE WATER TABLE IS WITHIN 2 FEET OF THE PIPE INVERT.

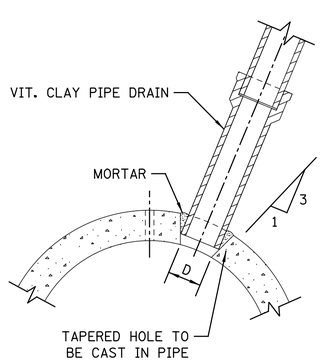

SIZE OF DRAIN	''D''
6''	6⅞''
8''	9⅛''
10''	11⅛''
12''	13½''
15''	17''
18''	20¼''
21''	23⅞''

DETAIL OF TAPERED HOLE

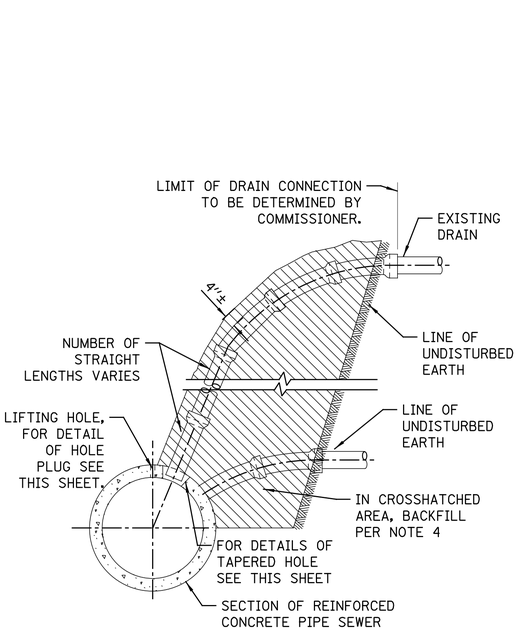

ELEVATION

TYPICAL DRAIN CONNECTIONS FOR EXISTING DRAINS

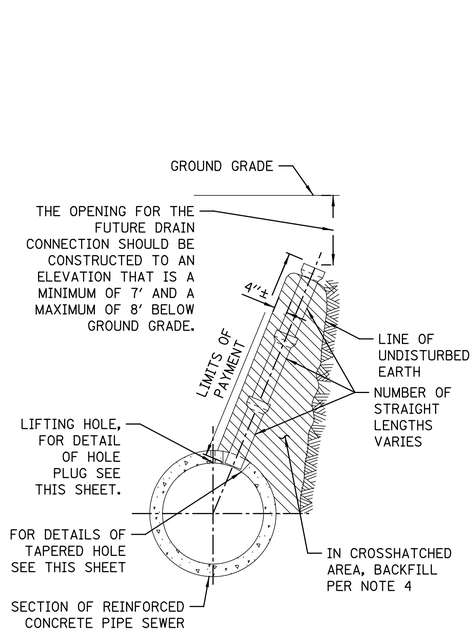

ELEVATION

TYPICAL DRAIN STACKS FOR FUTURE USE

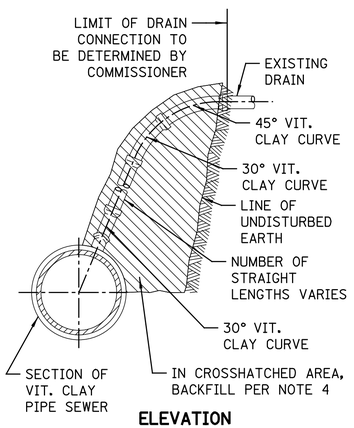

ELEVATION

TYPICAL DRAIN CONNECTIONS FOR EXISTING DRAINS

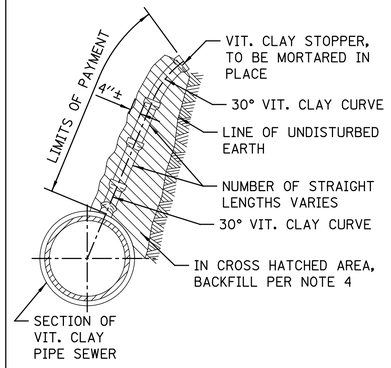

ELEVATION

TYPICAL DRAIN STACKS FOR FUTURE USE

NOTE:
1. FOR TRENCH BACKFILL, REFER TO IDOT SSRBC, ARTICLE 1003.04.

2. FOR GRANULAR EMBEDMENT, USE CA-11, CRUSHED GRAVEL, CRUSHED STONE, OR CRUSHED CONCRETE.

3. FOR STABILIZATION STONE, 12'' OF CA-1 STONE IS ONLY REQUIRED WHEN UNSTABLE MATERIAL IS ENCOUNTERED AT TRENCH BOTTOM.

4. AGGREGATE PLACED FOR TEMPORARY SURFACE RESTORATION WILL NOT BE PAID SEPARATELY AND SHALL BE INCIDENTAL TO THE CONTRACT.

SEWER TRENCH DETAIL

NOTES:

1. ALL DRAIN CONNECTION JOINTS MUST BE MADE AS SPECIFIED IN SPECIFICATIONS..
2. FOR DUCTILE IRON PIPE DRAIN CONNECTIONS SEE SHEET NO. A.2.
3. FOR BACKFILL OF HATCHED SUPPORT AREAS, USE CONCRETE. CA-11, FLOWABLE FILL, OR CLSM.

STANDARD REVISIONS	
DATE	DESCRIPTION
7/3/18	APPROVED PLAN

PERCENT COMPLETE	DATE
30	01-14-19
60	04-19-19
75	08-02-19
90	09-23-19
100	11-09-20
BULLETIN	

CITY OF CHICAGO
DEPARTMENT OF WATER MANAGEMENT
BUREAU OF ENGINEERING SERVICES

VITRIFIED CLAY PIPE DRAIN CONNECTIONS AND SEWER TRENCH DETAIL

DRAWN: SBW
DESIGNED:
CHECKED: GD, GC, SO
REVIEWED:

A.1

13 OF 30

PN 7445

$FILE$
$DATE$

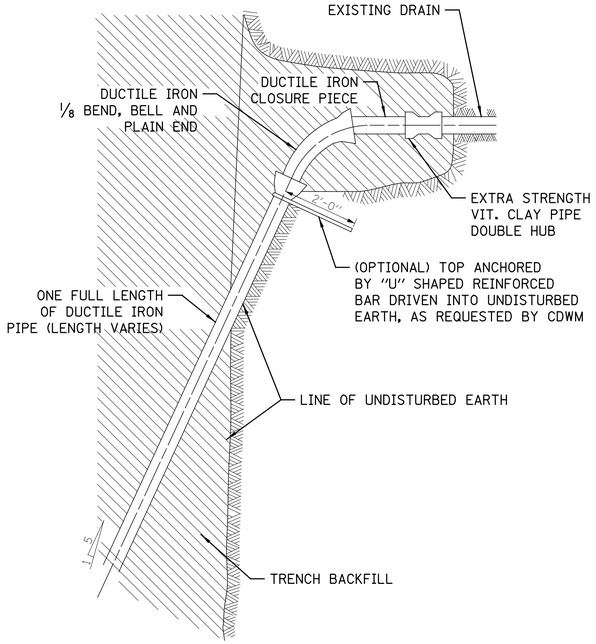

TYPICAL DRAIN CONNECTIONS FOR EXISTING DRAINS

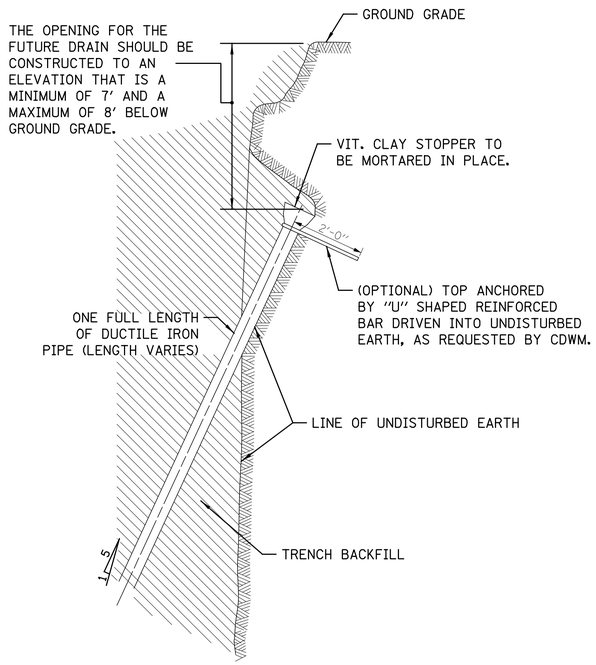

TYPICAL DRAIN STACKS FOR FUTURE USE

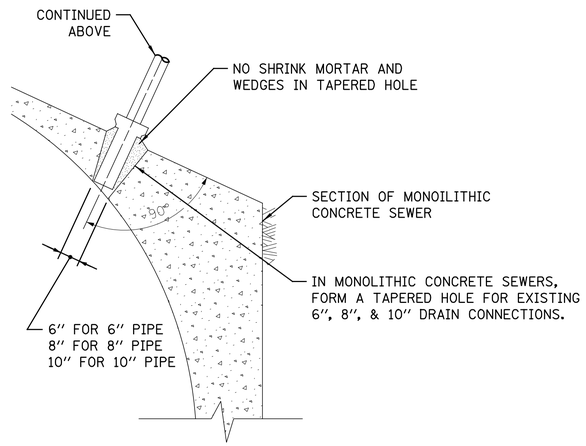

FOR MONOLITHIC CONCRETE SEWERS

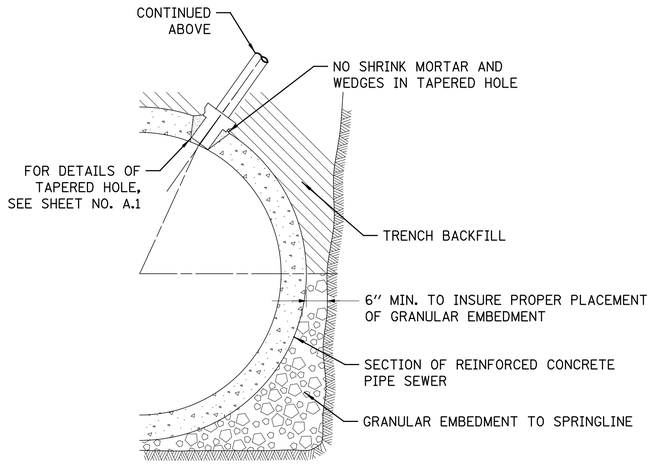

FOR REINFORCED CONCRETE PIPE SEWERS

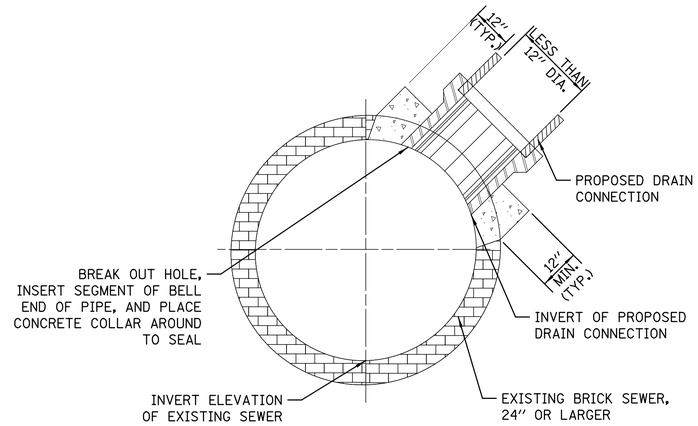

(NOT TO SCALE)

FOR BRICK SEWERS

DUCTILE IRON PIPE DRAIN CONNECTIONS

BRICK SEWER DRAIN CONNECTIONS

NOTES:
1. DUCTILE IRON PIPE MUST BE BELL END WITH PUSH-ON JOINTS CONFORMING TO ANSI SPECIFICATIONS A21.51 WITH CLASS 52 THICKNESS.
2. CONNECTIONS AND STACKS SHOWN MUST BE USED FOR 6", 8", & 10" DRAINS ONLY.
3. FOR VITRIFIED CLAY PIPE DRAIN CONNECTION AND DRAIN STACK CONSTRUCTION, SEE SHEET NO. A.1.
4. FOR TRENCH BACKFILL, REFER TO IDOT SSRBC, ARTICLE 1003.04.
5. FOR GRANULAR EMBEDMENT, USE CA-11, CRUSHED GRAVEL, CRUSHED STONE, OR CRUSHED CONCRETE.

STANDARD REVISIONS	
DATE	DESCRIPTION
9/20/17	APPROVED PLAN

PERCENT COMPLETE	DATE
30	01-14-19
60	04-19-19
75	08-02-19
90	09-23-19
100	11-09-20
BULLETIN	

CITY OF CHICAGO
DEPARTMENT OF WATER MANAGEMENT
BUREAU OF ENGINEERING SERVICES

DUCTILE IRON PIPE DRAIN CONNECTIONS

DRAWN: SBW
DESIGNED:
CHECKED:
REVIEWED:

A.2

14 OF 30

PN 7445

$FILE$
$DATE$

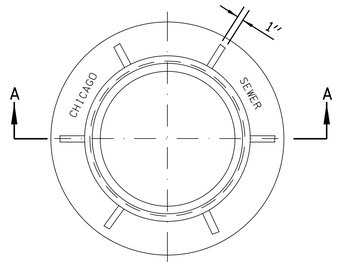

PLAN

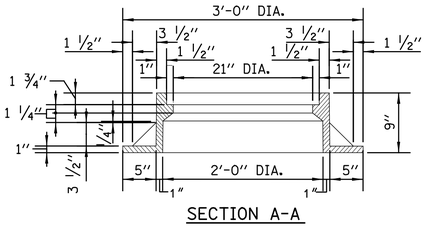

SECTION A-A

NOTE: METAL PLATES MUST BE FURNISHED FOR PERFORATED LIDS ON MANHOLES.

HEAVYWEIGHT MANHOLE FRAME

MATERIAL: CAST IRON

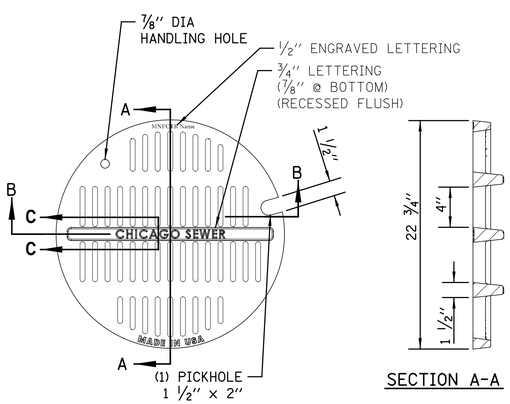

SECTION A-A

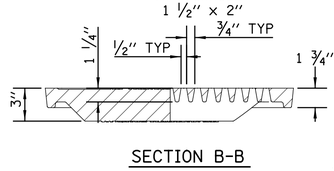

SECTION B-B

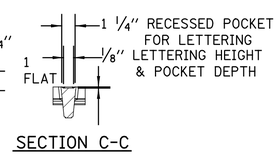

SECTION C-C

MATERIALS
GRATE-GRAY IRON
ASTM A48 CL35B
DESIGN LOAD
HEAVY DUTY
COATING
UNDIPPED
OPEN AREA
85.6 SQ. IN.

STANDARD CB/MH LID

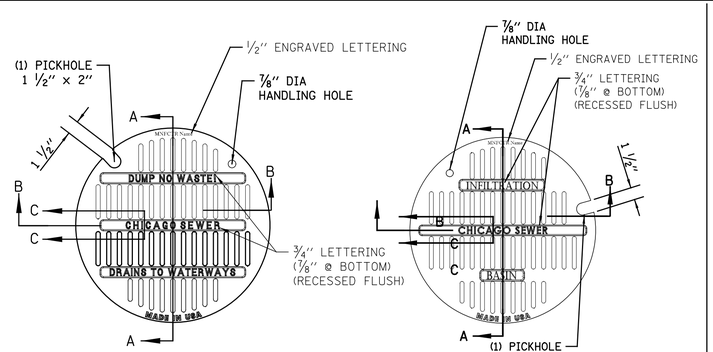

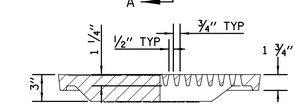

SECTION B-B

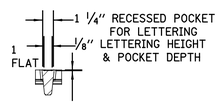

SECTION C-C

MATERIALS
GRATE-GRAY IRON
ASTM A48 CL35B
DESIGN LOAD
HEAVY DUTY
COATING
UNDIPPED
OPEN AREA
85.6 SQ. IN.

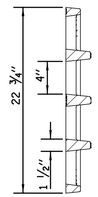

SECTION A-A

STANDARD LID FOR STORM ONLY/ INFILTRATION SYSTEMS

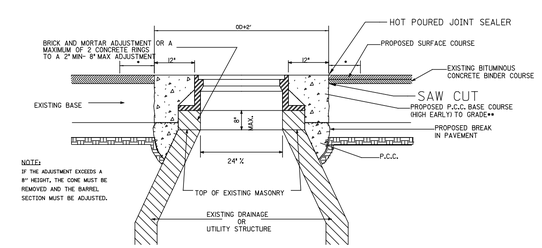

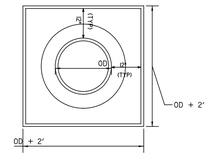

PLAN VIEW (BASE TO GRADE)

*REFER TO CDOT FOR ASPHALT RESTORATION REQUIREMENTS & CRACK SEALING.

** ON NON-MORATORIUM STREETS, FULL-DEPTH PCC BASE COURSE MAY BE UTILIZED. ON MORATORIUM STREETS, PAVEMENT RESTORATION SHALL ADHERE T CDOT REQUIREMENTS.

NOTES:

IF THE ADJUSTMENT EXCEEDS AN 8" HEIGHT, THE CONE MUST BE REMOVED AND THE BARREL SECTION MUST BE ADJUSTED.

THE CONTRACTOR IS REQUIRED TO REPLACE ANY BROKEN FRAMES AND LIDS OF SEWER STRUCTURES WITH STANDARD FRAMES AND LIDS OF THE DWM. IN ADJUSTMENT OR RECONSTRUCTION OF SEWER STRUCTURES, ANY NON-STANDARD FRAMES AND LIDS MUST BE REPLACED WITH STANDARD FRAMES AND LIDS. IN ADJUSTMENT OR RECONSTRUCTION OF INLETS, ANY NON-STANDARD INLETS (GUTTER BOXES) MUST BE REPLACED WITH DWM STANDARD INLETS.

THE FRAMES AND LIDS OF SEWER STRUCTURES TO BE ABANDONED, REMOVED, OR FILLED MUST BE SALVAGED AND THE DWM NOTIFIED FOR PICK UP.

MANHOLES, CATCH BASINS AND INLETS MUST BE PROTECTED FROM THE ENTRY OF ASPHALT/DEBRIS INTO THE SEWER SYSTEM DURING CONSTRUCTION. THE CONTRACTOR MUST MARK LOCATIONS OF ALL SEWER STRUCTURES ON THE SIDEWALK BEFORE STARTING PAVEMENT REMOVAL/REPLACEMENT. ADJUSTMENT OF FRAMES AND LIDS OF SEWER STRUCTURES MUST BE COMPLETED PRIOR TO STREET RESURFACING.

DETAIL OF FRAME ADJUSTMENT

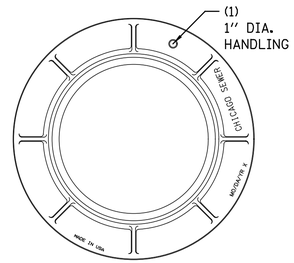

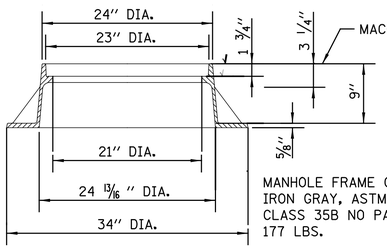

MANHOLE FRAME CAST IRON GRAY, ASTM A-48 CLASS 35B NO PAINT 177 LBS.

LIGHTWEIGHT MANHOLE FRAME

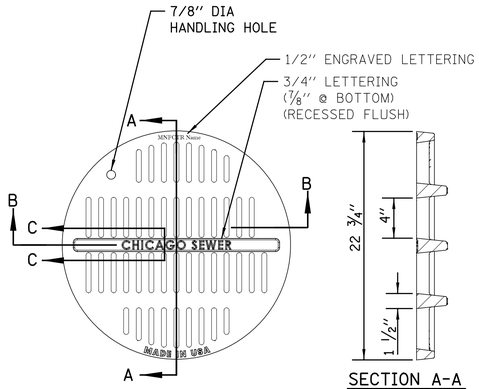

SECTION A-A

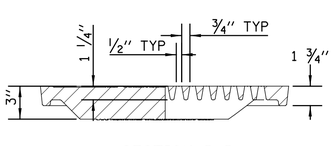

SECTION B-B

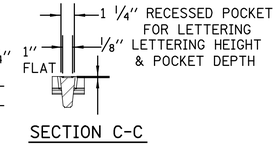

SECTION C-C

ADA COMPLIANT CATCH BASIN/MANHOLE LID

NOTE:
NOT TO BE USED WITHOUT PRIOR APPROVAL OF CDWM

MATERIALS
GRATE-GRAY IRON
ASTM A48 CL35B
DESIGN LOAD
HEAVY DUTY
COATING
UNDIPPED
OPEN AREA
85.6 SQ. IN.

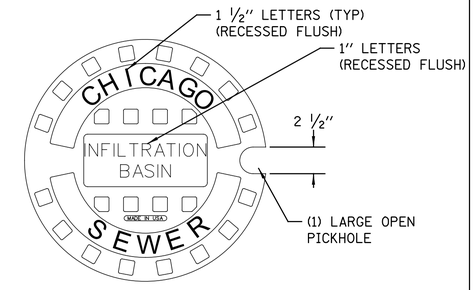

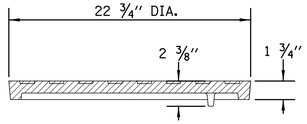

COVER SECTION

INFILTRATION SOLID LID FOR CATCH BASIN

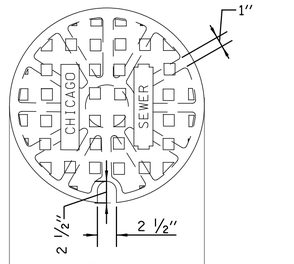

PLAN

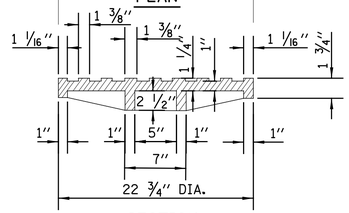

SECTION

SOLID LID FOR MANHOLES

STANDARD REVISIONS	
DATE	DESCRIPTION
10/1/19	Approved

PERCENT COMPLETE	DATE
30	01-14-19
60	04-19-19
75	08-02-19
90	09-23-19
100	11-09-20
BULLETIN	

CITY OF CHICAGO
DEPARTMENT OF WATER MANAGEMENT
BUREAU OF ENGINEERING SERVICES

MANHOLE
LIDS AND FRAMES

DRAWN: SBW
DESIGNED:
CHECKED: GD, GC, SO
REVIEWED:

A.3

15 OF 30

PN 7445

$FILE$
$DATE$

NUMBER OF PRECAST RINGS REQUIRED FOR MANHOLES OF VARIOUS HEIGHTS

TOTAL HEIGHT "H"	9" FRAME +2'-8" CORBEL =3'-5"	PRECAST RINGS 4'-0"	2'-8"	1'-4"	8"	4"	BRICK AND/OR MORTAR	TOTAL HEIGHT "H"	9" FRAME +2'-8" CORBEL =3'-5"	PRECAST RINGS 4'-0"	2'-8"	1'-4"	8"	4"	BRICK AND/OR MORTAR	TOTAL HEIGHT "H"	9" FRAME +2'-8" CORBEL =3'-5"	PRECAST RINGS 4'-0"	2'-8"	1'-4"	8"	4"	BRICK AND/OR MORTAR
5'-0"	3'-5"			1			3"	12'-0"	3'-5"	2				1	3"	19'-0"	3'-5"	3	1		1		3"
1"	"			1			4"	1"	"	2				1	4"	1"	"	3	1		1		4"
2"	"			1		1	1"	2"	"	2			1		1"	2"	"	3	1		1	1	1"
3"	"			1		1	2"	3"	"	2			1		2"	3"	"	3	1		1	1	2"
4"	"			1		1	3"	4"	"	2			1		3"	4"	"	3	1		1	1	3"
5"	"			1		1	4"	5"	"	2			1		4"	5"	"	3	1		1	1	4"
6"	"			1			1"	6"	"	2			1	1	1"	6"	"	4					1"
7"	"			1			2"	7"	"	2			1	1	2"	7"	"	4					2"
8"	"			1			3"	8"	"	2			1	1	3"	8"	"	4					3"
9"	"			1			4"	9"	"	2			1	1	4"	9"	"	4					4"
10"	"			1		1	1"	10"	"	2		1			1"	10"	"	4				1	1"
11"	"			1		1	2"	11"	"	2		1			2"	11"	"	4				1	2"
6'-0"	3'-5"			1		1	3"	13'-0"	3'-5"	2		1			3"	20'-0"	3'-5"	4				1	3"
1"	"			1		1	4"	1"	"	2		1			4"	1"	"	4				1	4"
2"	"		1		1		1"	2"	"	2		1		1	1"	2"	"	4			1		1"
3"	"		1		1		2"	3"	"	2		1		1	2"	3"	"	4			1		2"
4"	"		1		1		3"	4"	"	2		1		1	3"	4"	"	4			1		3"
5"	"		1		1		4"	5"	"	2		1		1	4"	5"	"	4			1		4"
6"	"		1		1	1	1"	6"	"	2		1	1		1"	6"	"	4			1	1	1"
7"	"		1		1	1	2"	7"	"	2		1	1		2"	7"	"	4			1	1	2"
8"	"		1		1	1	3"	8"	"	2		1	1		3"	8"	"	4			1	1	3"
9"	"		1		1	1	4"	9"	"	2		1	1		4"	9"	"	4			1	1	4"
10"	"		1		1		1"	10"	"	2		1	1	1	1"	10"	"	4		1			1"
11"	"		1		1		2"	11"	"	2		1	1	1	2"	11"	"	4		1			2"
7'-0"	3'-5"		1		1		3"	14'-0"	3'-5"	2		1	1	1	3"	21'-0"	3'-5"	4		1			3"
1"	"		1		1		4"	1"	"	2		1	1	1	4"	1"	"	4		1			4"
2"	"		1		1	1	1"	2"	"	2	1				1"	2"	"	4		1		1	1"
3"	"		1		1	1	2"	3"	"	2	1				2"	3"	"	4		1		1	2"
4"	"		1		1	1	3"	4"	"	2	1				3"	4"	"	4		1		1	3"
5"	"		1		1	1	4"	5"	"	2	1				4"	5"	"	4		1		1	4"
6"	"	1					1"	6"	"	2	1			1	1"	6"	"	4		1	1		1"
7"	"	1					2"	7"	"	2	1			1	2"	7"	"	4		1	1		2"
8"	"	1					3"	8"	"	2	1			1	3"	8"	"	4		1	1		3"
9"	"	1					4"	9"	"	2	1			1	4"	9"	"	4		1	1		4"
10"	"	1				1	1"	10"	"	2	1		1		1"	10"	"	4		1	1	1	1"
11"	"	1				1	2"	11"	"	2	1		1		2"	11"	"	4		1	1	1	2"
4"	"	1				1	3"	4"	"	3					3"	4"	"	4	1				3"
5"	"	1				1	4"	5"	"	3			1		4"	5"	"	4	1		1	1	4"
6"	"	1					1"	6"	"	3			1	1	1"	6"	"	5					1"
7"	"	1					2"	7"	"	3			1	1	2"	7"	"	5					2"
8"	"	1					3"	8"	"	3			1	1	3"	8"	"	5					3"
9"	"	1					4"	9"	"	3			1	1	4"	9"	"	5					4"
10"	"	1		1			1"	10"	"	3					1"	10"	"	4	1		1		1"
11"	"	1		1			2"	11"	"	3					2"	11"	"	4	1		1		2"
9'-0"	3'-5"	1		1			3"	16'-0"	3'-5"	3				1	3"	23'-0"	3'-5"	4	1		1		3"
1"	"	1		1			4"	1"	"	3				1	4"	1"	"	4	1		1		4"
2"	"	1		1		1	1"	2"	"	3			1		1"	2"	"	4	1		1	1	1"
3"	"	1		1		1	2"	3"	"	3			1		2"	3"	"	4	1		1	1	2"
4"	"	1		1		1	3"	4"	"	3			1		3"	4"	"	4	1		1	1	3"
5"	"	1		1		1	4"	5"	"	3			1		4"	5"	"	4	1		1	1	4"
6"	"	1		1			1"	6"	"	3			1	1	1"	6"	"	5					1"
7"	"	1		1			2"	7"	"	3			1	1	2"	7"	"	5					2"
8"	"	1		1			3"	8"	"	3			1	1	3"	8"	"	5					3"
9"	"	1		1			4"	9"	"	3			1	1	4"	9"	"	5					4"
10"	"	1		1		1	1"	10"	"	3			1		1"	10"	"	5				1	1"
11"	"	1		1		1	2"	11"	"	3			1		2"	11"	"	5				1	2"

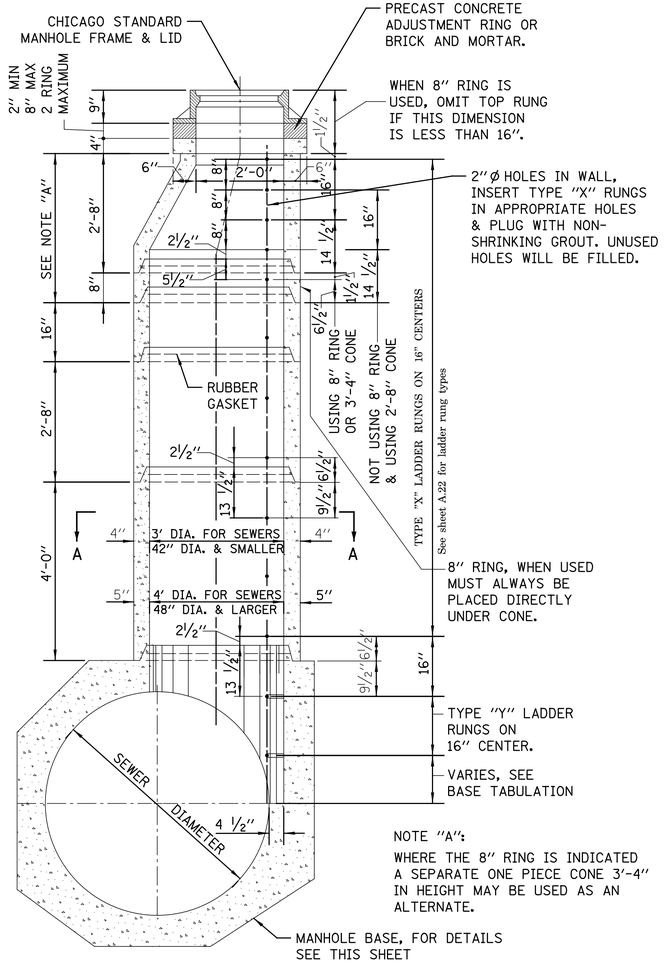

NOTE "A":
WHERE THE 8" RING IS INDICATED A SEPARATE ONE PIECE CONE 3'-4" IN HEIGHT MAY BE USED AS AN ALTERNATE.

DETAIL OF PRECAST RINGS

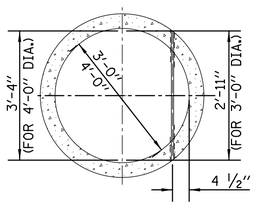

1"Ø LADDER RUNG,TYPE "X", LENGTH 2'-11" OR 3'-4" INSERTED INTO 2"Ø HOLE IN WALL & PLUGGED BY MANUFACTURER WITH NON-SHRINKING GROUT.

SECTION A-A

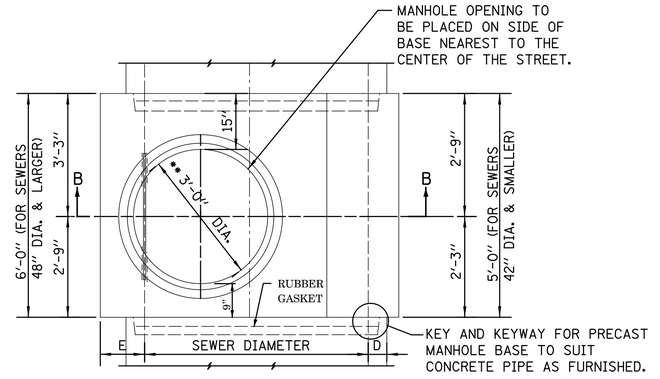

PLAN

** { 3'-0" DIA. FOR SEWERS 42" DIA. & SMALLER
4'-0" DIA. FOR SEWERS 48" DIA. & LARGER

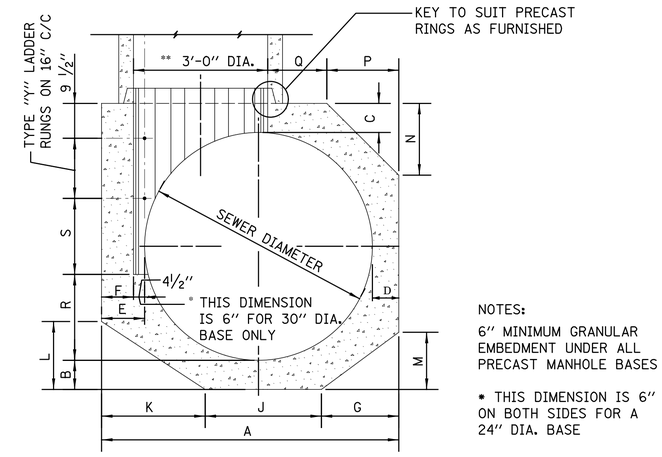

SECTION B-B

NOTES:
6" MINIMUM GRANULAR EMBEDMENT UNDER ALL PRECAST MANHOLE BASES

* THIS DIMENSION IS 6" ON BOTH SIDES FOR A 24" DIA. BASE

DETAIL OF PRECAST BASE

SEWER DIA.	DIMENSIONS OF PRECAST MANHOLE BASE A	B	C	D	E	F	G	J	K	L	M	N	P	Q	R	S	# "Y" RUNGS
36"	4'-4"*	6"	6"	6"	10"*	6"	16"	16"	20"*	12"*	9"*	—	—	10"*	18"	14"*	1
30"	4'-0"	6"	6"	6"	12"	6"	14"	14"	20"	12"	8"*	—	—	6"	15"	11"*	1
24"	4'-0"	6"	6"	12"	12"	6"	16"	16"	16"	9"*	9"*	—	—	6"	12"	8"*	1

NOTES:

PRECAST CONCRETE RINGS MUST CONFORM TO A.S.T.M. DESIGNATION C76 FOR "REINFORCED CONCRETE CULVERT, STORM DRAIN, AND SEWER PIPE", CLASS II, WALL B.

STANDARD LENGTHS OF RINGS ARE: 4'-0", 2'-8". 1'-4", 0'-8" AND 0'-4" COLLAR.

ALL REINFORCEMENT STEEL REQUIRED FOR PRECAST RINGS MUST BE INCLUDED IN THE PRICE BID FOR ALL MANHOLE ITEMS.

ALL PIPE AND FITTINGS 24 INCHES IN DIAMETER AND LARGER MUST BE CLASS III, IV AND V REINFORCED CONCRETE PIPE AS SPECIFIED IN THE SPECIFICATIONS FOR "REINFORCED CONCRETE CULVERT STORM DRAIN, AND SEWER PIPE."
A.S.T.M. DESIGNATION C76, TABLE III, IV AND V, WALL B OR WALL C WITH CIRCULAR OR ELLIPTICAL REINFORCEMENT

STANDARD REVISIONS	
DATE	DESCRIPTION
9/19/17	APPROVED PLAN

PERCENT COMPLETE	DATE
30	01-14-19
60	04-19-19
75	08-02-19
90	09-23-19
100	11-09-20
BULLETIN	

CITY OF CHICAGO
DEPARTMENT OF WATER MANAGEMENT
BUREAU OF ENGINEERING SERVICES

TYPE "A" MANHOLE PRECAST RISERS, BASES AND RINGS 24" AND LARGER

DRAWN: SBW
DESIGNED:
CHECKED:
REVIEWED:

A.6

16 OF 30

PN 7445

$FILE$
$DATE$

STRUCTURE		REINFORCEMENT BAR						BENDING DIMENSIONS											
	MARK	SIZE NO.	TYPE	LENGTH	NO. REQD.	WEIGHT – LBS EACH	WEIGHT – LBS TOTAL	A	B	C	D	E	F	G	H	J	K	O	R
BASES FOR TYPE "A" MANHOLES (Precast) 36" DIA.	36A1	6	T3	12'-7"	6	18.90	113										2'-0"	3'-4"*	
	36A2	5	9	6'-0"	4	6.26	25		6'-0"						2'-2"			3'-0"	20"
	36A3	5	12	4'-6"	4	4.69	19			2'-9"	21"				18"		10"*		
	36A4	5	12	5'-0"	5	5.22	26		7"	3'-0"	17"				14"*		8"*		
	36A5	5	12	5'-9"	5	6.00	30		15"	2'-9"	21"				18"		10"*		
	36A6	5	T3	11-11"	3	12.43	37										20"	3'-3"*	
	36A7	5	12	5'-8"	5	5.91	30		15"	3'-0"	17"				14"*		8"*		
	36A8	4	STR.	4'-8"	18	3.12	56												
	TOTAL						336												
30" DIA.	30A1	6	T3	11'-1"	6	16.65	100										2'-0"	2'-10"*	
	30A2	5	9	4'-4"	4	4.52	18		4'-4"						18"			2'-10"	17"
	30A3	5	12	4'-0"	4	4.17	17			2'-3"	21"				18"		10"*		
	30A4	5	12	3'-10"	5	4.00	20			2'-7"	15"				12"*		7"*		
	30A5	5	12	5'-3"	5	5.48	27		15"	2'-3"	21"				18"		10"*		
	30A6	5	T3	11'-11"	3	12.43	37										20"	3'-3"*	
	30A7	5	12	5'-1"	5	5.30	26		15"	2'-7"	15"				12"*		7"*		
	30A8	4	STR	4'-8"	15	3.12	47												
	TOTAL						292												
24" DIA.	24A1	6	9	3'-5"	6	5.13	31		3'-5"						13"			2'-3"*	14"*
	24A2	6	T3	9'-4"	7	14.02	98										22"	2'-4"*	
	24A3	5	12	3'-6"	10	3.65	37			2'-1"	17"				14"*		8"*		
	24A4	5	12	4'-9"	10	4.96	50		15"	2'-1"	17"				14"*		8"*		
	24A5	5	T3	11'-11"	3	12.43	37										20"	3'-3"*	
	24A6	4	STR.	4'-8"	12	3.12	37												
	TOTAL						280												

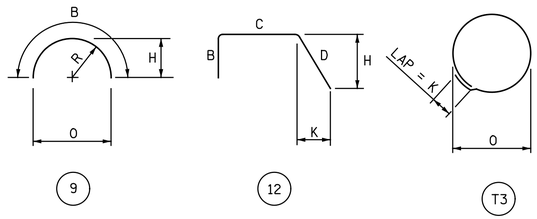

NOTES:
ALL DIMENSIONS ARE OUT TO OUT OF BAR.

BENDING RADII "R" TO OUTSIDE OF BAR.

NUMBERS IN CIRCLES DENOTE BAR TYPE.

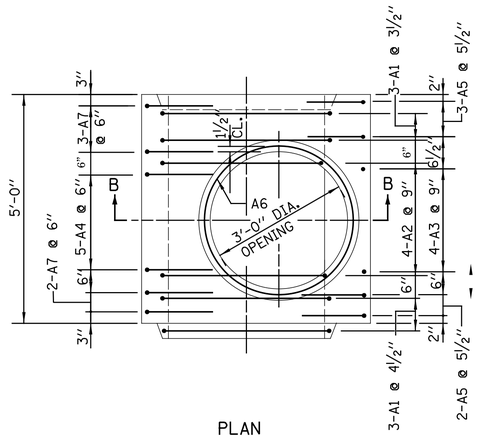

PLAN

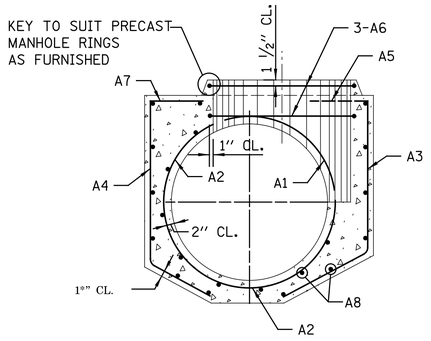

SECTION B-B

MANHOLE BASE FOR SEWERS 36" DIA.

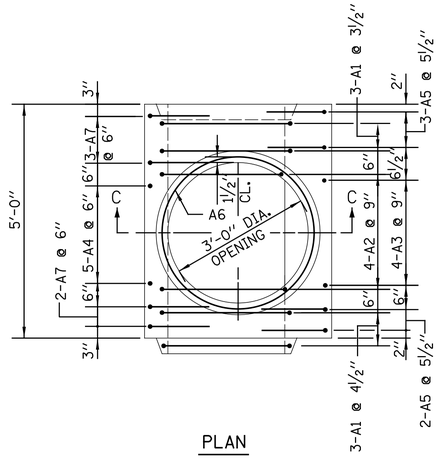

PLAN

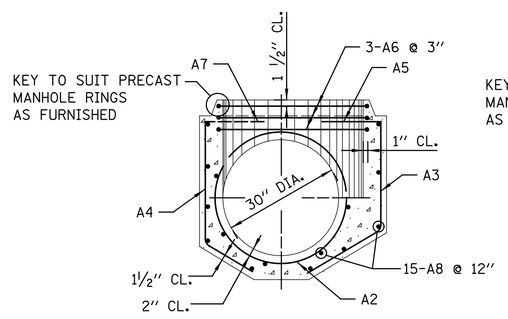

SECTION C-C

MANHOLE BASE FOR 30" DIA. SEWERS

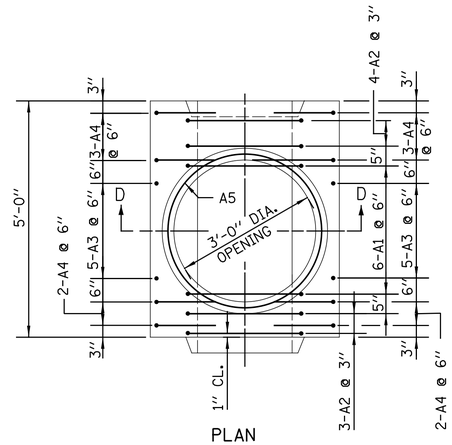

PLAN

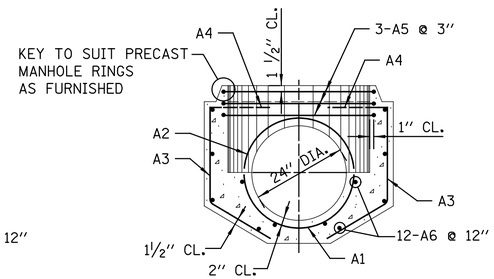

SECTION D-D

MANHOLE BASE FOR 24" DIA. SEWERS

PLACING OF CONCRETE- CONCRETE MUST BE PLACED IN ACCORDANCE WITH THE METHOD OUTLINED IN THE CITY OF CHICAGO STANDARD SPECIFICATIONS.
CONSTRUCTION JOINTS - JOINTS NOT INDICATED ON THE DRAWINGS MUST BE SO MADE AND LOCATED AS NOT TO IMPAIR THE STRENGTH OF THE STRUCTURE AND MUST BE APPROVED BY THE COMMISSIONER. JOINTS MUST BE CONSTRUCTED IN ACCORDANCE WITH THE METHOD OUTLINED IN THE SPECIFICATIONS.

CONCRETE PROTECTION FOR REINFORCEMENT- ALL REINFORCING STEEL MUST HAVE CLEAR CONCRETE COVERING AS FOLLOWS (UNLESS OTHERWISE NOTED) :
3" AT EXTERIOR SURFACES WHERE CONCRETE IS DEPOSITED AGAINST THE GROUND;
2.5" AT SURFACES WHERE CONCRETE IS FORMED BUT SUBSEQUENTLY WILL BE IN CONTACT WITH SEWAGE; 2" AT ALL OTHER SURFACES.

REINFORCING STEEL- ALL REINFORCING BARS MUST BE ACCURATELY PLACED AND SECURELY SUPPORTED BY BAR SUPPORTS, SPACERS OR HIGH CHAIRS.
ALL LAPS IN REINFORCING STEEL MUST BE BASED UPON THE 1989, ACI BUILDING CODE.
UNLESS OTHERWISE NOTED. HOOKS AND BENDS ON BARS MUST CONFORM TO RECOMMENDED DETAILS AS GIVEN IN THE "MANUAL OF STANDARD PRACTICE", C.R.S.I. 1990.

THE FOLLOWING ABBREVIATIONS ARE USED TO INDICATE THE LOCATION OF REINFORCING BARS:

T.	DENOTES	TOP	N.F.	DENOTES	NEAR FACE
BOT.	DENOTES	BOTTOM	F.F.	DENOTES	FAR FACE
I.F.	DENOTES	INSIDE FACE	E.F.	DENOTES	EACH FACE
O.F.	DENOTES	OUTSIDE FACE	E.W.	DENOTES	EACH WAY

PLACING BAR SUPPORTS- ALL REINFORCING BARS MUST BE SUPPORTED, ANCHORED AND TIED AND MUST CONFORM TO THE "RECOMMENDED PRACTICE FOR PLACING REINFORCING BARS", 1986, PREPARED BY THE CONCRETE REINFORCING STEEL INSTITUTE.

STANDARD REVISIONS	
DATE	DESCRIPTION
2/23/17	REVISION

PERCENT COMPLETE	DATE
30	01-14-19
60	04-19-19
75	08-02-19
90	09-23-19
100	11-09-20
BULLETIN	

CITY OF CHICAGO
DEPARTMENT OF WATER MANAGEMENT
BUREAU OF ENGINEERING SERVICES

REINFORCEMENT FOR TYPE "A" PRECAST BASES AND RINGS 24" to 36"

DRAWN: SBW
DESIGNED:
CHECKED:
REVIEWED:

A.7

17 OF 30

PN 7445

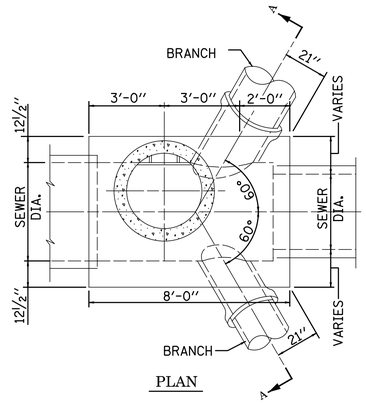

PLAN

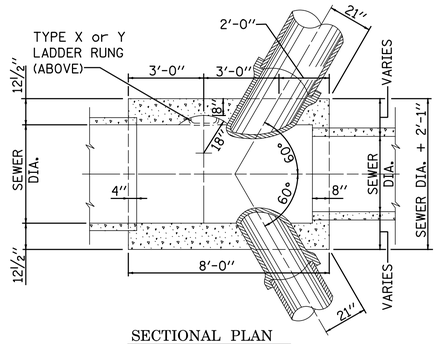

SECTIONAL PLAN

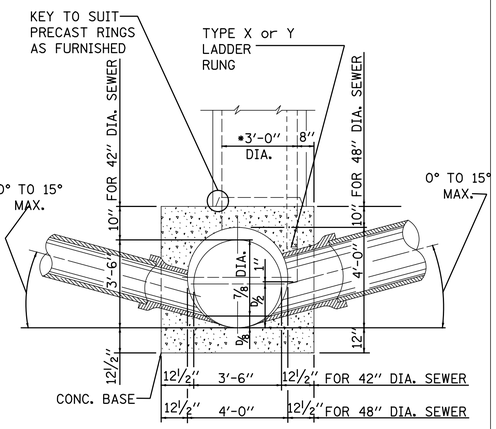

SECTION A–A

TYPE "B" MANHOLE
FOR SEWERS 48" DIA. & 42" DIA.

Not To Scale

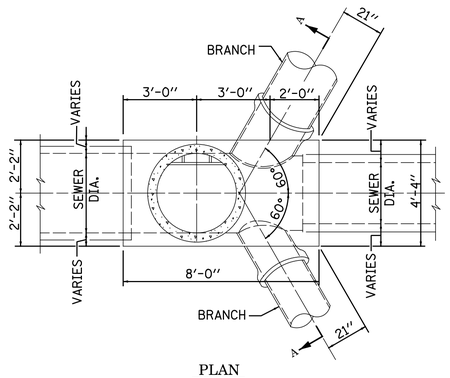

PLAN

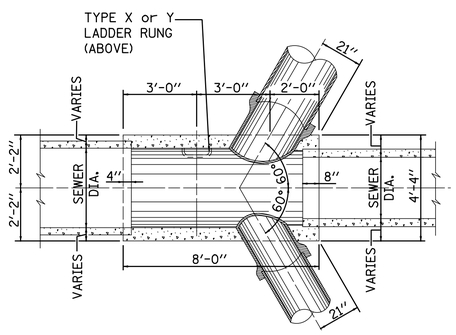

SECTIONAL PLAN

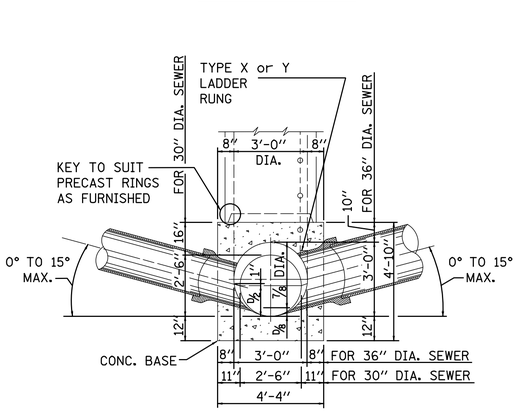

SECTION A–A

TYPE "B" MANHOLE
FOR SEWERS 36" DIA. & 30" DIA.

Not To Scale

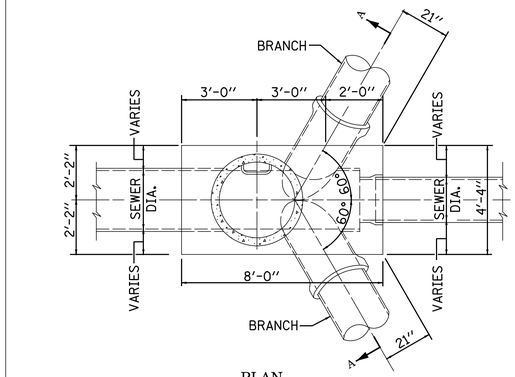

PLAN

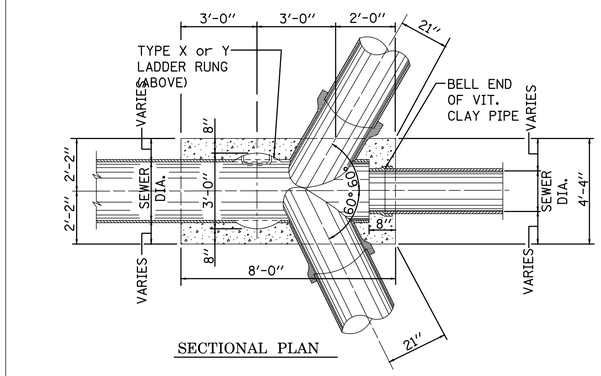

SECTIONAL PLAN

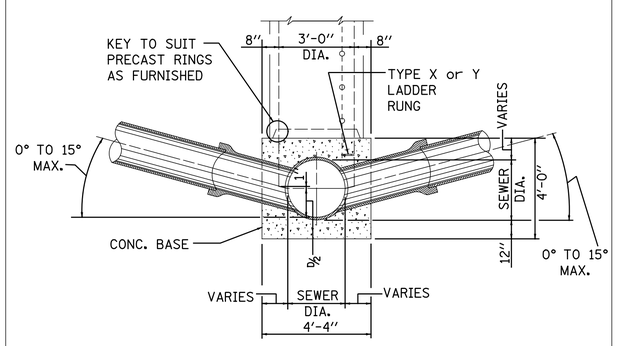

SECTION A–A

TYPE "B" MANHOLE
FOR SEWERS 24" DIA. & SMALLER

Not To Scale

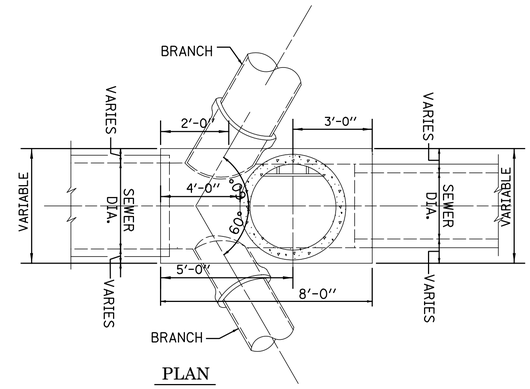

PLAN

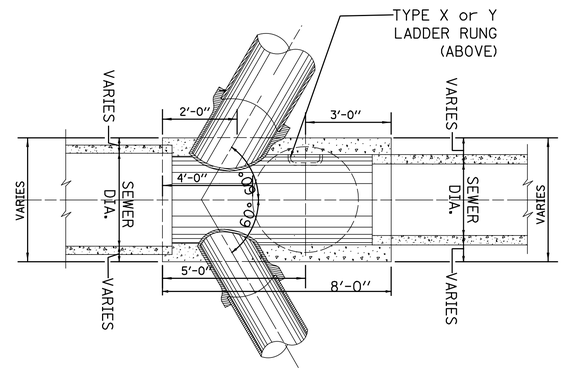

SECTIONAL PLAN

TYPICAL REVERSE TYPE "B" MANHOLE

Not To Scale

NOTES:

1. CONTRACTOR MUST SUBMIT SHOP DRAWINGS OF ALL PROPOSED MANHOLE CONFIGURATIONS FOR APPROVAL PRIOR TO SUBMISSION OF MATERIAL ORDERS.

2. CONNECTION BELLS MAY BE INSTALLED AT MANUFACTURER'S SITE, OR MORTARED IN PLACE IN THE FIELD. SEE SHEET A.11 FOR FURTHER CONFIGURATION DETAILS.

3. BASES MUST BE PRECAST WITH THE CORRECT NUMBER OF PIPE OPENINGS, CORRESPONDING TO THE REPRESENTATION IN THE PLAN AND PROFILE SHEETS.

4. PATCHING, BRICKING, OR OTHER MATERIAL METHODS OF CLOSING UNUSED HOLES WILL NOT BE ACCEPTED.

5. 6" MINIMUM GRANULAR EMBEDMENT UNDER ALL PRECAST MANHOLE BASES

6. ALL PIPE AND FITTINGS 24 INCHES IN DIAMETER AND LARGER MUST BE CLASS III, IV AND V REINFORCED CONCRETE PIPE AS SPECIFIED IN THE SPECIFICATIONS FOR "REINFORCED CONCRETE CULVERT STORM DRAIN, AND SEWER PIPE." A.S.T.M. DESIGNATION C76, TABLE III, IV AND V, WALL B OR WALL C WITH CIRCULAR OR ELLIPTICAL REINFORCEMENT

STANDARD REVISIONS	
DATE	DESCRIPTION
9/19/17	APPROVED PLAN

PERCENT COMPLETE	DATE
30	01-14-19
60	04-19-19
75	08-02-19
90	09-23-19
100	11-09-20
BULLETIN	

CITY OF CHICAGO
DEPARTMENT OF WATER MANAGEMENT
BUREAU OF ENGINEERING SERVICES

TYPE "B" MANHOLE

DRAWN: SBW
DESIGNED:
CHECKED:
REVIEWED:

A.9

18 OF 30

PN 7445

$FILE$
$DATE$

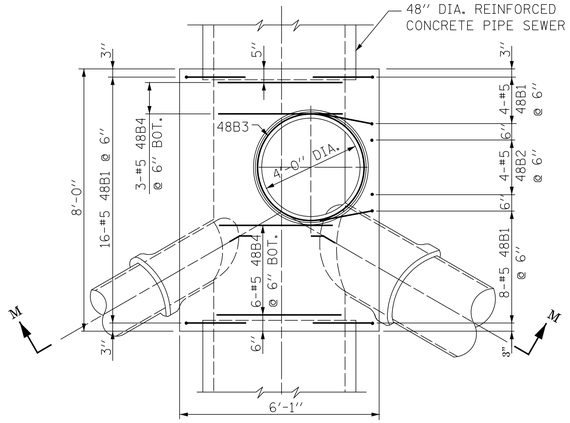

PLAN

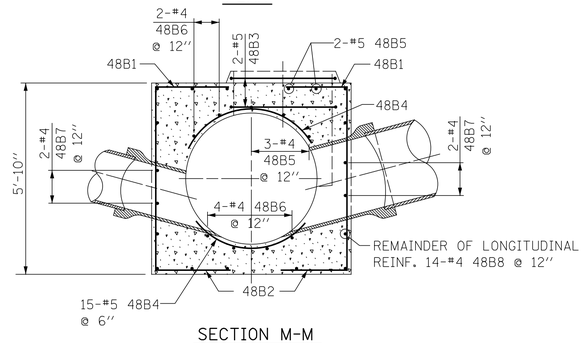

SECTION M-M

48" DIA. SEWER

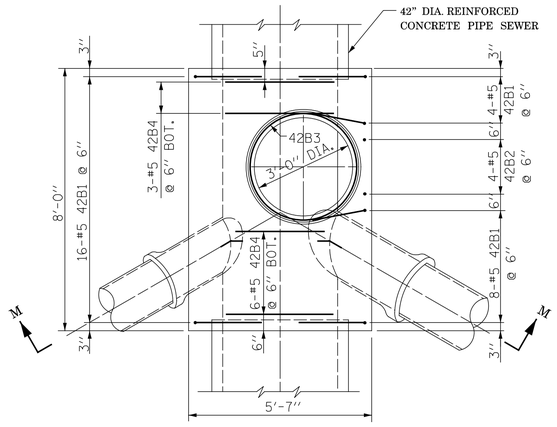

PLAN

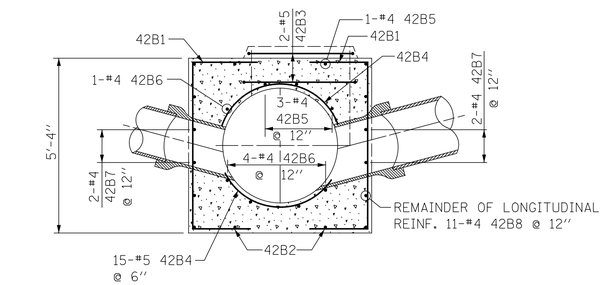

SECTION M-M

42" DIA. SEWER

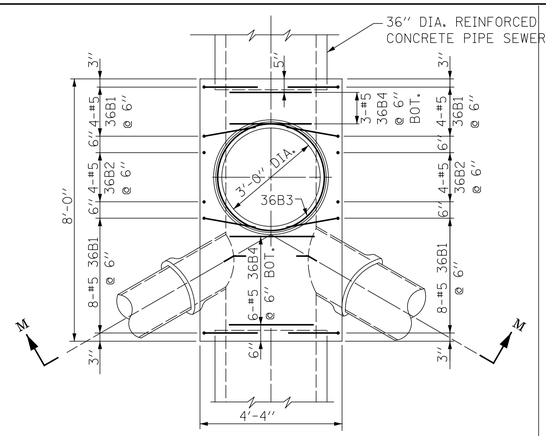

PLAN

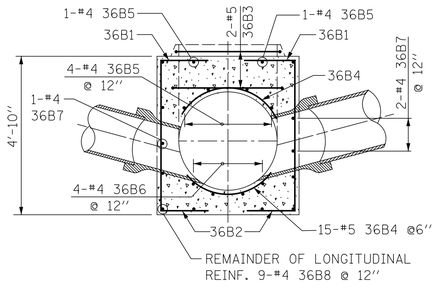

SECTION M-M

36" DIA. SEWER

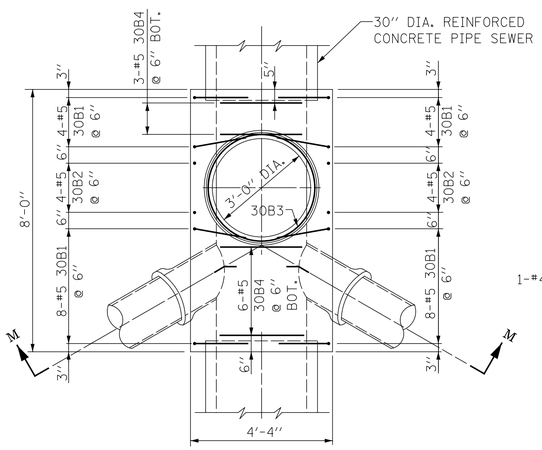

PLAN

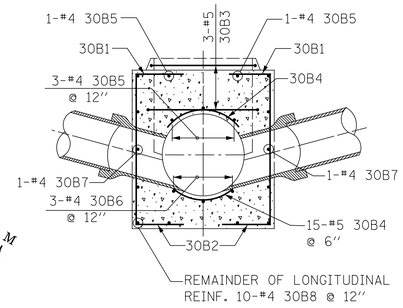

SECTION M-M

30" DIA. SEWER

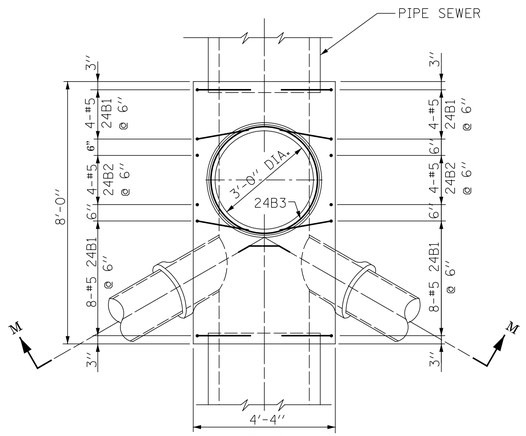

PLAN

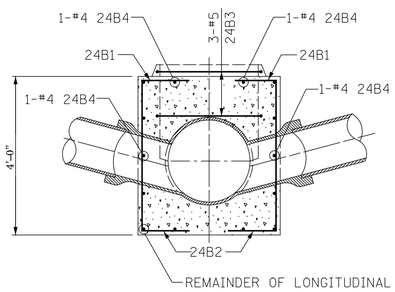

SECTION M-M

NOTES:
1. CONTRACTOR MUST SUBMIT SHOP DRAWINGS OF ALL PROPOSED MANHOLE CONFIGURATIONS FOR APPROVAL PRIOR TO SUBMISSION OF MATERIAL ORDERS.

2. CONNECTION BELLS MAY BE INSTALLED AT MANUFACTURER'S SITE, OR MORTARED IN PLACE IN THE FIELD. SEE SHEET A.11 FOR FURTHER CONFIGURATION DETAILS.

3. BASES MUST BE PRECAST WITH THE CORRECT NUMBER OF PIPE OPENINGS, CORRESPONDING TO THE REPRESENTATION IN THE PLAN AND PROFILE SHEETS.

4. PATCHING, BRICKING, OR OTHER MATERIAL METHODS OF CLOSING UNUSED HOLES WILL NOT BE ACCEPTED.

5. ALL PIPE AND FITTINGS 24 INCHES IN DIAMETER AND LARGER MUST BE CLASS III, IV AND V REINFORCED CONCRETE PIPE AS SPECIFIED IN THE SPECIFICATIONS FOR "REINFORCED CONCRETE CULVERT STORM DRAIN, AND SEWER PIPE." A.S.T.M. DESIGNATION C76, TABLE III, IV AND V, WALL B OR WALL C WITH CIRCULAR OR ELLIPTICAL REINFORCEMENT

24" DIA. SEWERS & SMALLER

STANDARD REVISIONS	
DATE	DESCRIPTION
9/19/17	revision

PERCENT COMPLETE	DATE
30	01-14-19
60	04-19-19
75	08-02-19
90	09-23-19
100	11-09-20
BULLETIN	

CITY OF CHICAGO
DEPARTMENT OF WATER MANAGEMENT
BUREAU OF ENGINEERING SERVICES

REINFORCEMENT FOR
TYPE "B" MANHOLE BASES

DRAWN: SBW
DESIGNED:
CHECKED:
REVIEWED:

A.10

19 OF 30

PN 7445

$FILE$
$DATE$

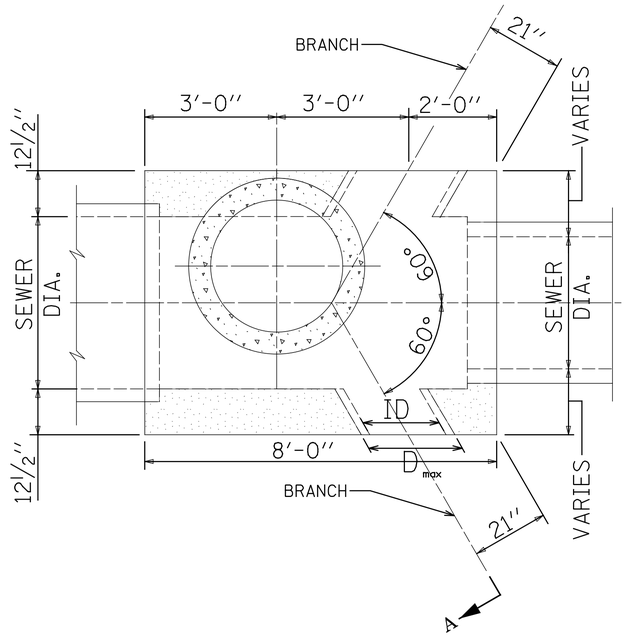

TYPICAL 4 OPENING TYPE B MANHOLE

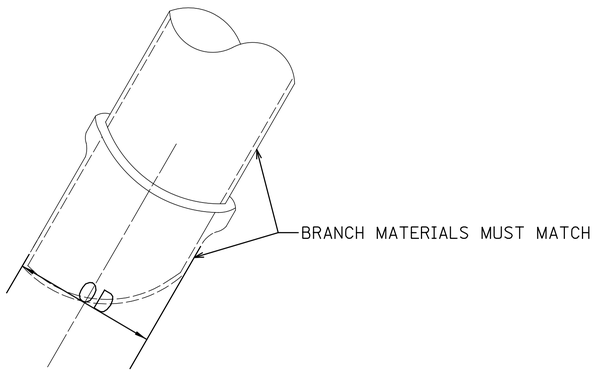

NOTES:
1. CONTRACTOR MUST SUBMIT SHOP DRAWINGS OF ALL PROPOSED MANHOLE CONFIGURATIONS FOR APPROVAL PRIOR TO SUBMISSION OF MATERIAL ORDERS.

2. CONNECTION BELLS MAY BE INSTALLED AT MANUFACTURER'S SITE, OR MORTARED IN PLACE IN THE FIELD.

3. BASES MUST BE PRECAST WITH THE CORRECT NUMBER OF PIPE OPENINGS, CORRESPONDING TO THE REPRESENTATION IN THE PLAN AND PROFILE SHEETS.

4. PATCHING, BRICKING, OR OTHER MATERIAL METHODS OF CLOSING UNUSED HOLES WILL NOT BE ACCEPTED.

5. ALL PIPE AND FITTINGS 24 INCHES IN DIAMETER AND LARGER MUST BE CLASS III, IV AND V REINFORCED CONCRETE PIPE AS SPECIFIED IN THE SPECIFICATIONS FOR "REINFORCED CONCRETE CULVERT STORM DRAIN, AND SEWER PIPE." A.S.T.M. DESIGNATION C76, TABLE III, IV AND V, WALL B OR WALL C WITH CIRCULAR OR ELLIPTICAL REINFORCEMENT

BRANCH SIZING CHART

ID PIPE (in.)	MATERIAL	OD PIPE (in.)	D max* (in.)
12	VCP	14.36	18.36
15	VCP	17.8	21.8
18	VCP	21.48	25.48
21	VCP	25.54	31.54
8	DIP	9.05	13.05
10	DIP	11.1	15.1
12	DIP	13.2	17.2
14	DIP	15.3	19.3
16	DIP	17.4	21.4
18	DIP	19.5	23.5
20	DIP	21.6	25.6
24	DIP	25.8	29.8
24	RCP III (Wall B)	30	34
27	RCP III (Wall B)	33.5	37.5
30	RCP III (Wall B)	37	41
33	RCP III (Wall B)	40.5	44.5
36	RCP III (Wall B)	44	48
42	RCP III (Wall B)	51	55
48	RCP III (Wall B)	58	62
Notes:			
1. If the pipe class and wall size is not shown on this table, then D max =OD pipe + 4"			
*2. Dmax indicates the maximum size of branch opening to be cast or cut into structure.			

STANDARD REVISIONS	
DATE	DESCRIPTION
9/19/17	APPROVED PLAN

PERCENT COMPLETE	DATE
30	01-14-19
60	04-19-19
75	08-02-19
90	09-23-19
100	11-09-20
BULLETIN	

CITY OF CHICAGO
DEPARTMENT OF WATER MANAGEMENT
BUREAU OF ENGINEERING SERVICES

TYPE "B" MANHOLE CONFIGURATIONS

DRAWN: SBW
DESIGNED:
CHECKED:
REVIEWED:

A.11

20 OF 30

PN 7445

$FILE$
$DATE$

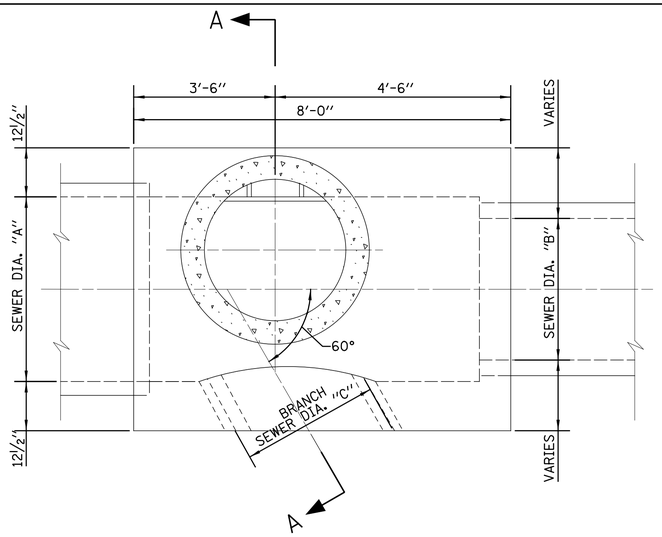

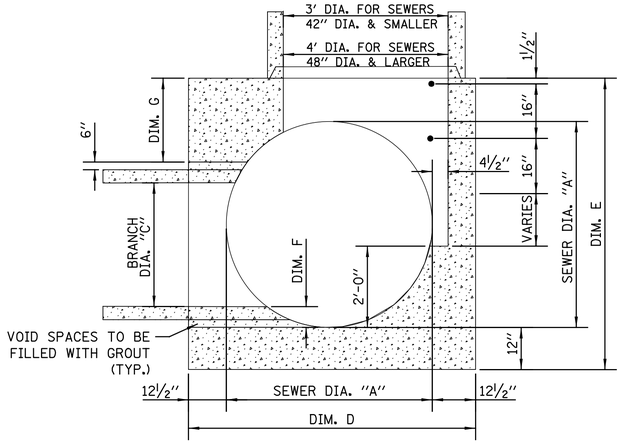

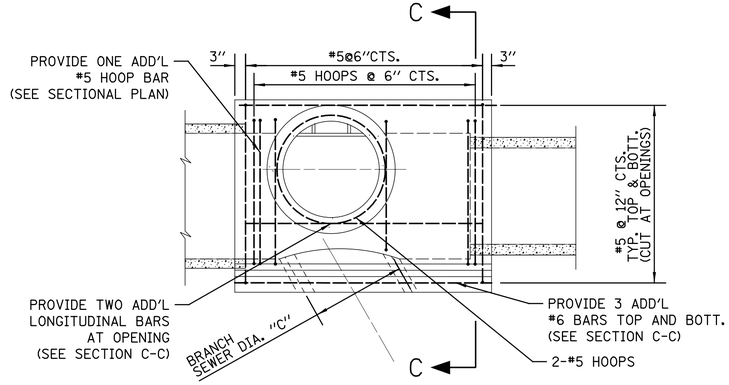

PLAN

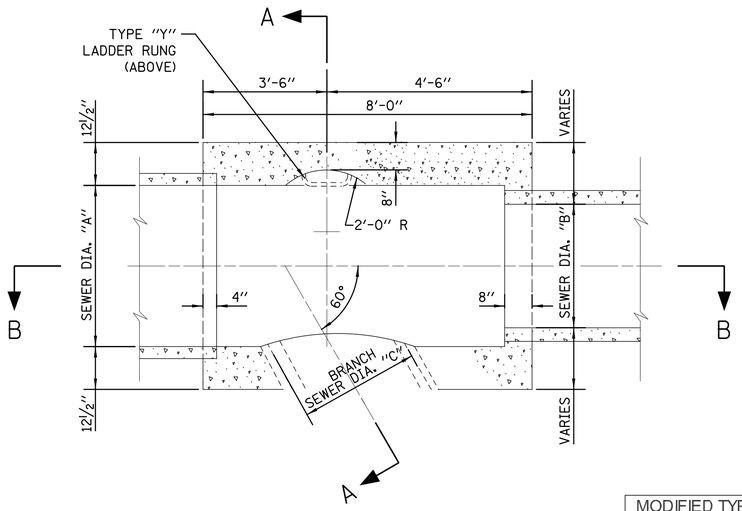

SECTION A-A

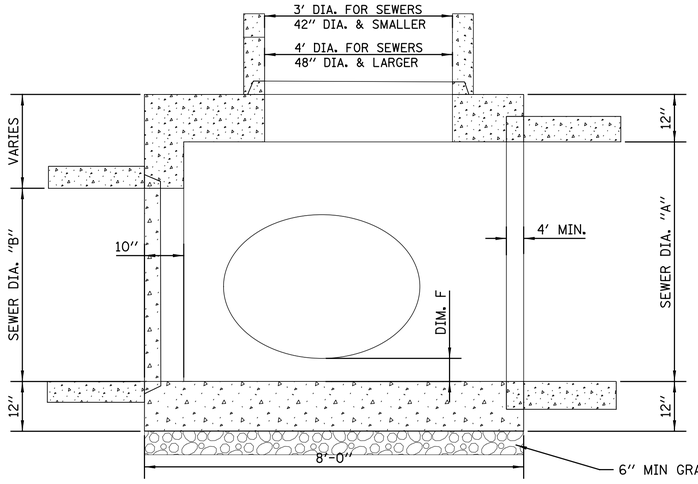

SECTION B-B

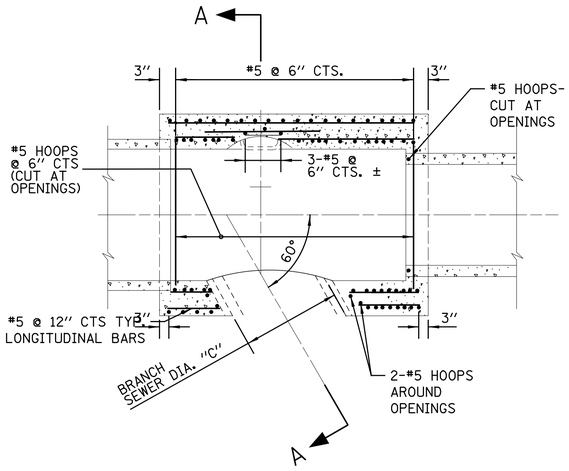

PLAN

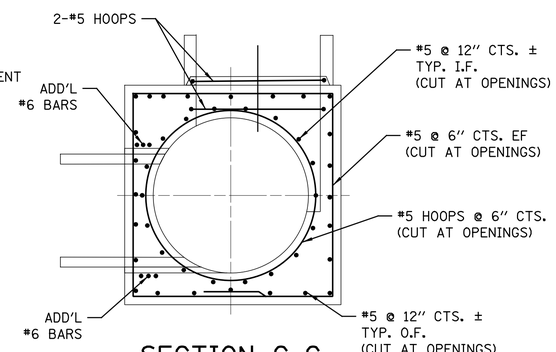

SECTIONAL PLAN

SECTIONAL PLAN

NOTES:
1. CONTRACTOR MUST SUBMIT SHOP DRAWINGS OF ALL PROPOSED MANHOLE CONFIGURATIONS FOR APPROVAL PRIOR TO SUBMISSION OF MATERIAL ORDERS.

2. CONNECTION BELLS MAY BE INSTALLED AT MANUFACTURER'S SITE, OR MORTARED IN PLACE IN THE FIELD. SEE SHEET A.11 FOR FURTHER CONFIGURATION DETAILS.

3. BASES MUST BE PRECAST WITH THE CORRECT NUMBER OF PIPE OPENINGS, CORRESPONDING TO THE REPRESENTATION IN THE PLAN AND PROFILE SHEETS.

4. PATCHING, BRICKING, OR OTHER MATERIAL METHODS OF CLOSING UNUSED HOLES WILL NOT BE ACCEPTED.

5. 6″ MINIMUM GRANULAR EMBEDMENT UNDER ALL PRECAST MANHOLE BASES

6. ALL PIPE AND FITTINGS 24 INCHES IN DIAMETER AND LARGER MUST BE CLASS III, IV AND V REINFORCED CONCRETE PIPE AS SPECIFIED IN THE SPECIFICATIONS FOR "REINFORCED CONCRETE CULVERT STORM DRAIN, AND SEWER PIPE." A.S.T.M. DESIGNATION C76, TABLE III, IV AND V, WALL B OR WALL C WITH CIRCULAR OR ELLIPTICAL REINFORCEMENT

MODIFIED TYPE B MANHOLES FOR 42", 36", & 30" BRANCHES						
SEWER SIZE		BRANCH SIZE	DIMENSION			
A	B	C	D	E	F	G
60	60	42	85	84	6	18
60	60	36	85	84	6	24
60	60	30	85	84	6	30
54	54	42	79	78	6	12
54	54	36	79	78	6	18
54	54	30	79	78	6	24
48	48	42	73	78	6	12
48	48	36	73	72	6	12
48	48	30	73	72	6	18
42	42	36	67	72	6	12
42	42	30	67	66	6	12
36	36	36	58	66	6	12
36	36	30	58	66	6	12
30	30	30	55	66	6	12

ALL MEASUREMENTS ARE IN INCHES

NOTE: WHEN B IS SMALLER THAN A, GAP SHALL BE FILLED WITH CONCRETE DURING CASTING.

SIMILAR REBAR DESIGN SHALL BE USE.

STANDARD REVISIONS	
DATE	DESCRIPTION
3/7/19	REVISED

PERCENT COMPLETE	DATE
30	01-14-19
60	04-19-19
75	08-02-19
90	09-23-19
100	11-09-20
BULLETIN	

CITY OF CHICAGO
DEPARTMENT OF WATER MANAGEMENT
BUREAU OF ENGINEERING SERVICES

MODIFIED TYPE "B" MANHOLE

DRAWN: SBW
DESIGNED:
CHECKED: CD, GC, SO
REVIEWED:

A.12

21 OF 30

PN 7445

$FILE$
$DATE$

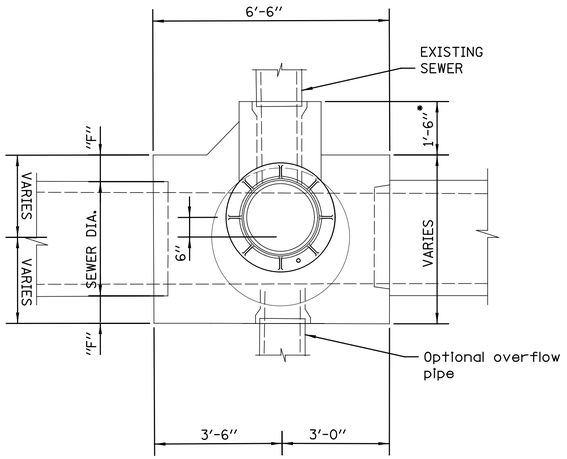

PLAN

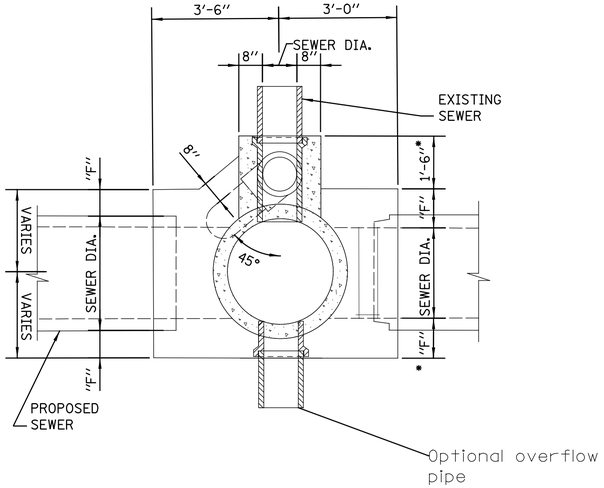

SECTIONAL PLAN

* 1′-8″ FOR 24″ DIA. SEWERS

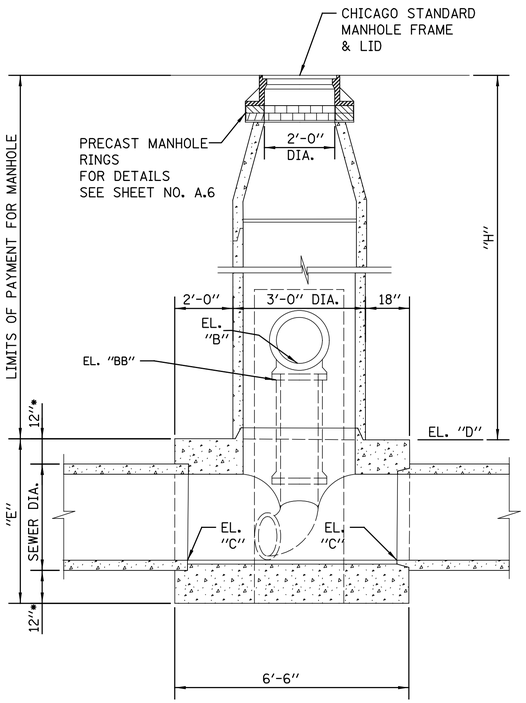

SECTION A-A

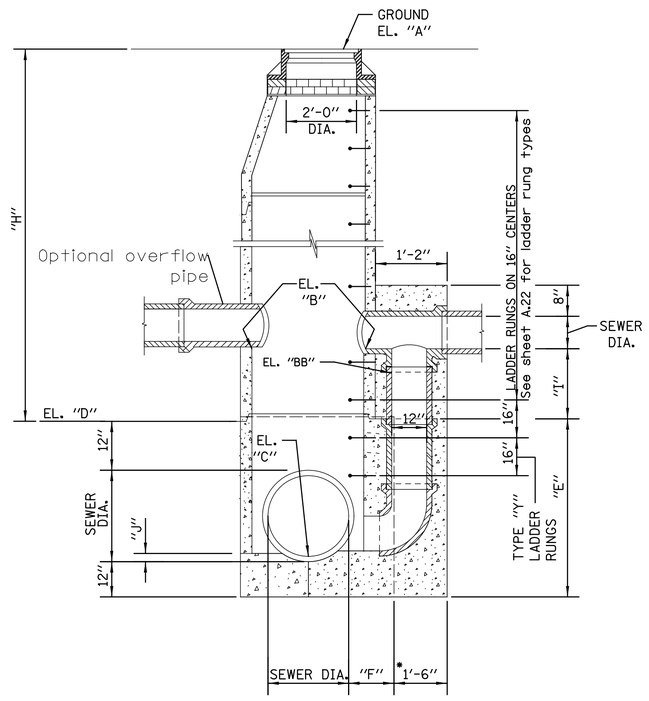

SECTION B-B

NOTE:
1. UNLESS OTHERWISE NOTED ALL PIPE AND FITTINGS 21″ AND UNDER ARE STANDARD STRENGTH VCP.

2. FOR DESIGN ONLY- USE 12″ DROP PIPE FOR THE FOLLOWING DEPTHS OF DWF:
6″ DWF-42″ LATERAL
7″ DWF-36″ LATERAL
8″ DWF-< 24″ LATERAL

3. ALL PIPE AND FITTINGS 24 INCHES IN DIAMETER AND LARGER MUST BE CLASS III, IV AND V REINFORCED CONCRETE PIPE AS SPECIFIED IN THE SPECIFICATIONS FOR "REINFORCED CONCRETE CULVERT STORM DRAIN, AND SEWER PIPE." A.S.T.M. DESIGNATION C76, TABLE III, IV AND V, WALL B OR WALL C WITH CIRCULAR OR ELLIPTICAL REINFORCEMENT

LOCATION	SHEET NO.	ELEVATION				
		"A"	"B"	"BB"	"C"	"D"

NOTE: Elevation BB >= Elevation D

STANDARD REVISIONS	
DATE	DESCRIPTION
9/19/17	APPROVED

PERCENT COMPLETE	DATE
30	01-14-19
60	04-19-19
75	08-02-19
90	09-23-19
100	11-09-20
BULLETIN	

CITY OF CHICAGO
DEPARTMENT OF WATER MANAGEMENT
BUREAU OF ENGINEERING SERVICES

TYPE C
SINGLE DROP MANHOLE

DRAWN: SBW
DESIGNED:
CHECKED:
REVIEWED:

A.14

22 OF 30

PN 7445

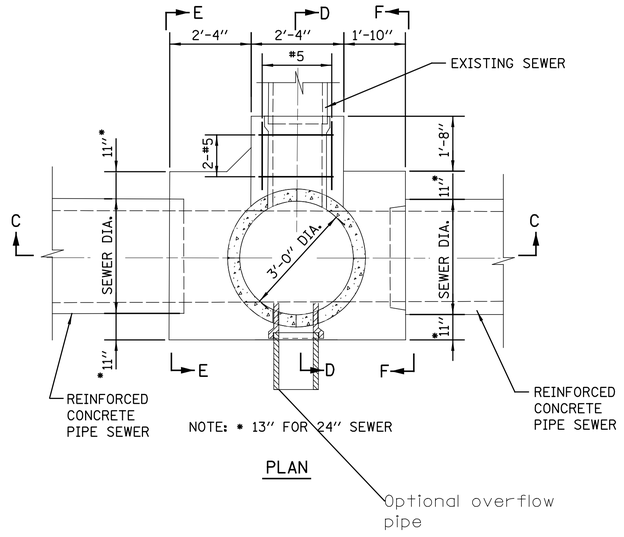

PLAN

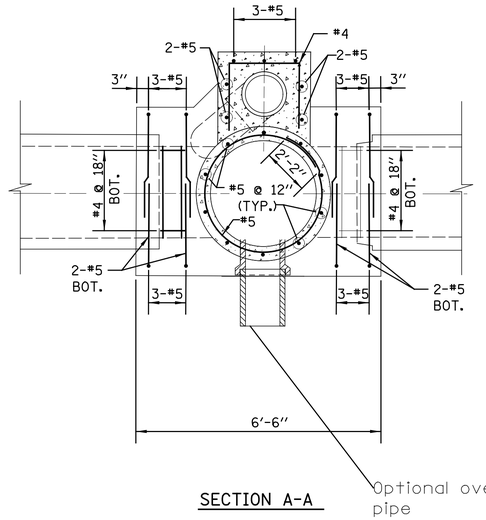

SECTION A-A

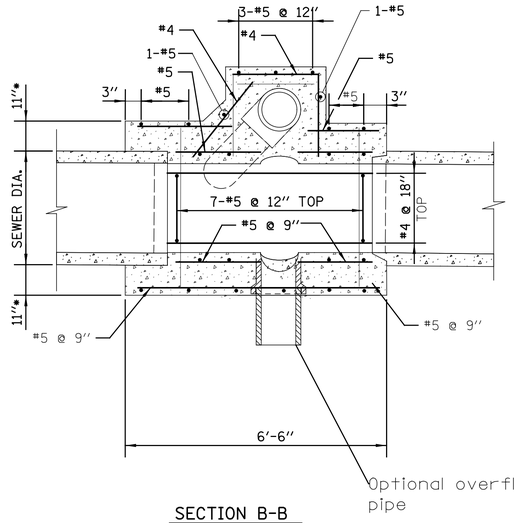

SECTION B-B

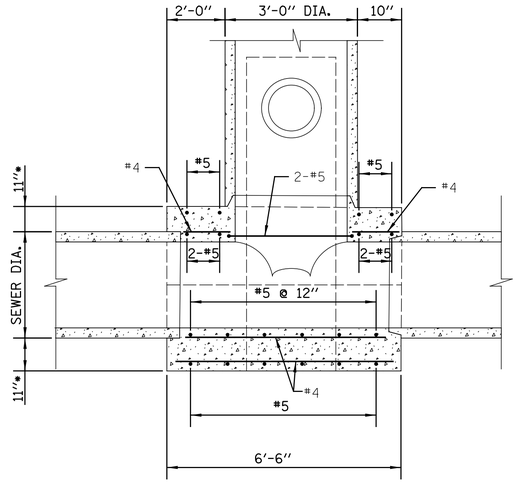

SECTION C-C

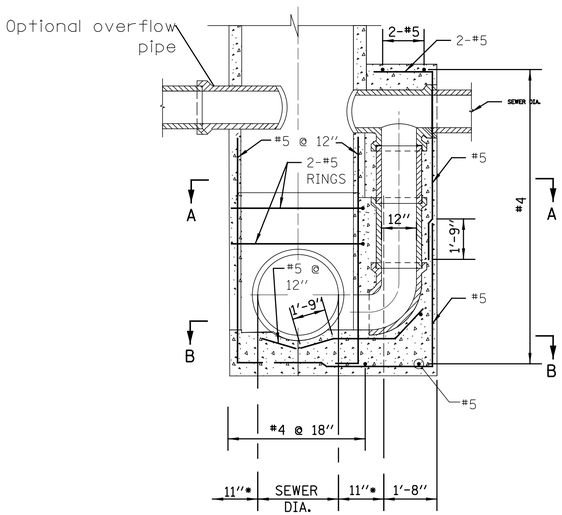

SECTION D-D

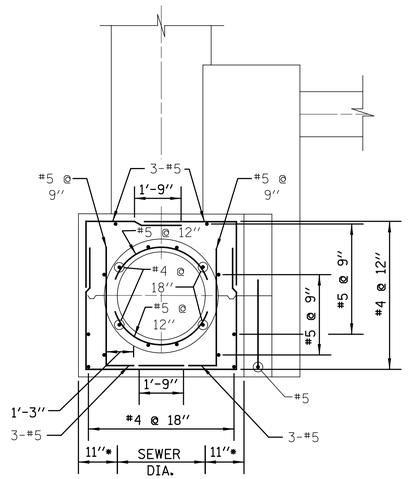

ELEVATION E-E

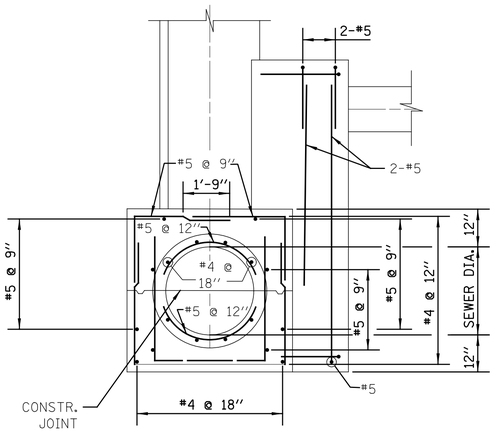

ELEVATION F-F

Note: For Design only- Use 12" Drop pipe for the following depths of DWF:
6" DWF-42" lateral
7" DWF-36" lateral
8" DWF≤ 24" lateral

FOR CONCRETE PIPE SEWERS
24" DIA. TO 48" DIA.

STANDARD REVISIONS	
DATE	DESCRIPTION
10/21/16	APPROVED

PERCENT COMPLETE	DATE
30	01-14-19
60	04-19-19
75	08-02-19
90	09-23-19
100	11-09-20
BULLETIN	

CITY OF CHICAGO
DEPARTMENT OF WATER MANAGEMENT
BUREAU OF ENGINEERING SERVICES

BASES FOR TYPE C
SINGLE DROP MANHOLE

DRAWN: SBW
DESIGNED:
CHECKED:
REVIEWED:

A.15

23 OF 30

PN 7445

$FILE$
$DATE$

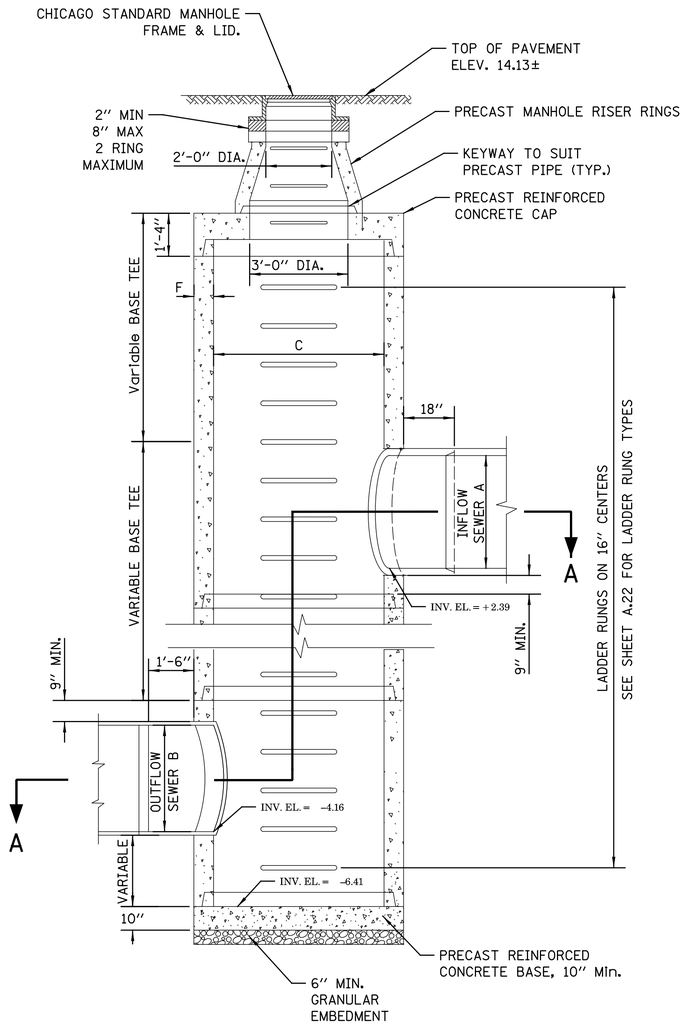

SECTION B-B
SCALE: N.T.S.

PRECAST COMPONENT TABLE

BASE TEE				WALL THICKNESS	CAP & BASE		LADDER RUNG LENGTH
A	B	C*	D	F	C	E	G
60	60	84	12	8	84	48	48.5
54	54	84	12	7 1/2	78	42	46.5
48	48	72	12	7	72	36	44
42	42	60	9	6	60	24	40
36	36	60	12	6	60	24	40
30	30	48	9	5	48	12	35
24	18	48	12	5	48	12	35

NOTE: ALL MEASUREMENTS ARE IN INCHES

*DIAMETERS >84" UP TO 144" ARE AVAILABLE IN 1' INCREMENTS

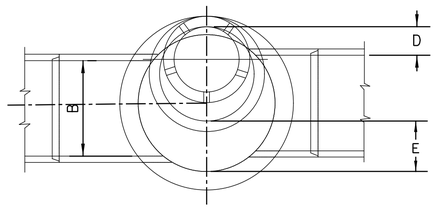

PLAN

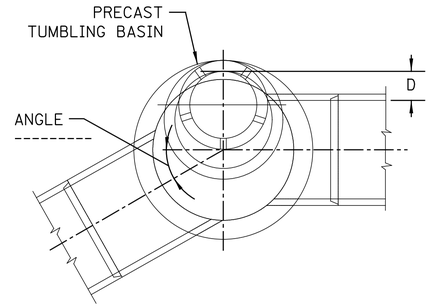

PLAN

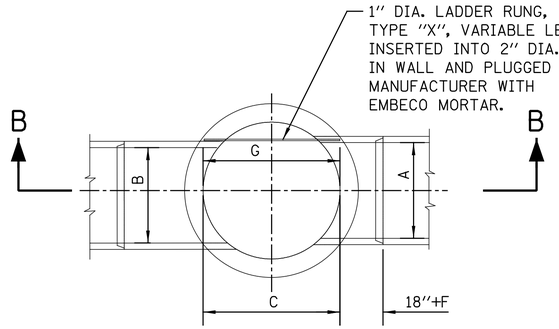

SECTIONAL PLAN A-A

OPTION: W/O BEND

SCALE: N.T.S.

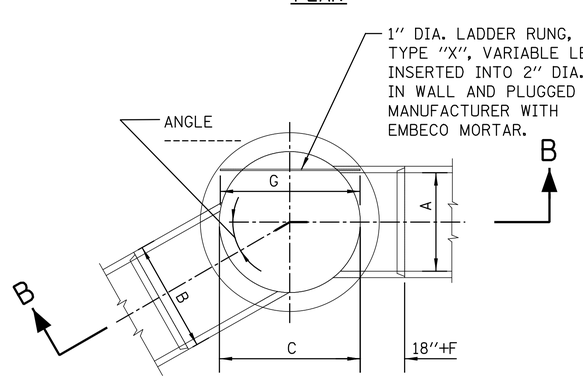

SECTIONAL PLAN A-A

OPTION: WITH BEND

SCALE: N.T.S.

NOTES:

1. FOR CONTRACTOR'S RESPONSIBILITY REGARDING STRUCTURAL DRAWING, SEE SPECIFICATIONS, BOOK 3.

2. ALL PIPE AND FITTINGS 24 INCHES IN DIAMETER AND LARGER MUST BE CLASS III, IV AND V REINFORCED CONCRETE PIPE AS SPECIFIED IN THE SPECIFICATIONS FOR "REINFORCED CONCRETE CULVERT STORM DRAIN, AND SEWER PIPE." A.S.T.M. DESIGNATION C76, TABLE III, IV AND V, WALL B OR WALL C WITH CIRCULAR OR ELLIPTICAL REINFORCEMENT;

3. FOR ADDITIONAL INFORMATION, SEE SPECIFICATIONS, BOOK 3.

STANDARD REVISIONS	
DATE	DESCRIPTION
9/19/17	Approved Plan

PERCENT COMPLETE	DATE
30	01-14-19
60	04-19-19
75	08-02-19
90	09-23-19
100	11-09-20
BULLETIN	

CITY OF CHICAGO
DEPARTMENT OF WATER MANAGEMENT
BUREAU OF ENGINEERING SERVICES

PRECAST
TUMBLING BASIN DETAILS
W 44TH PL & S PRINCETON AV

DRAWN: SBW
DESIGNED:
CHECKED:
REVIEWED:

A.18

24 OF 30

PN 7445

$FILE$
$DATE$

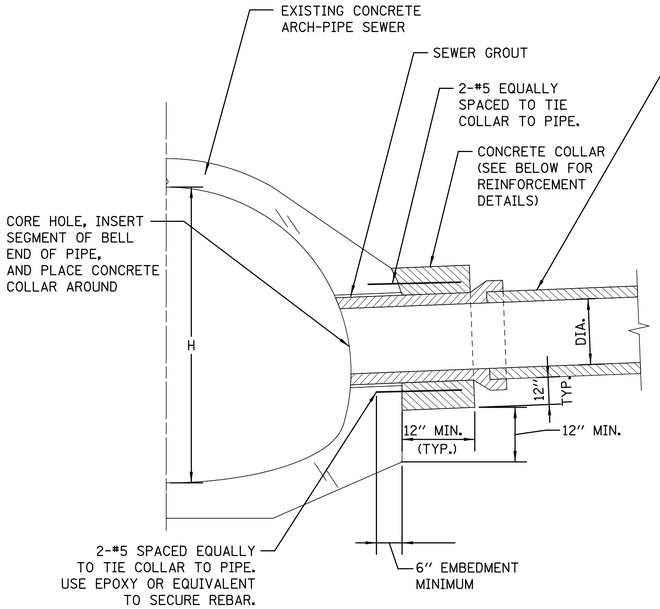

EXAMPLE TYPICAL CONNECTION DETAIL

(NOT TO SCALE)

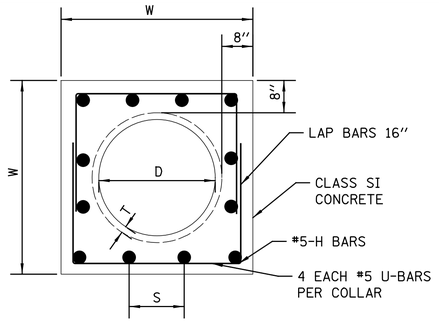

SECTION
(SAME DIAMETERS)

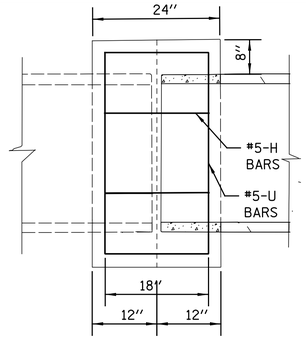

PLAN
(SAME DIAMETERS)

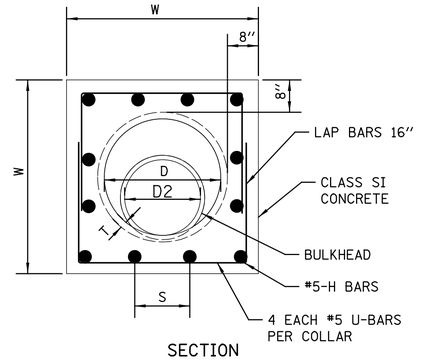

SECTION
(DIFFERENT DIAMETERS)

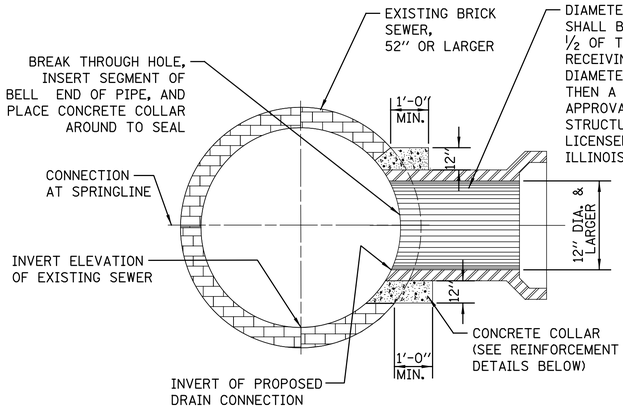

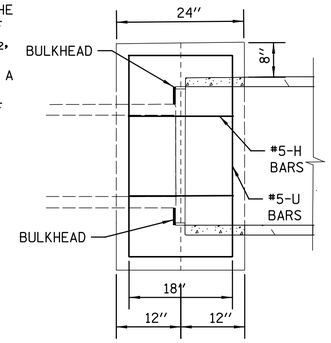

PLAN
(DIFFERENT DIAMETERS)

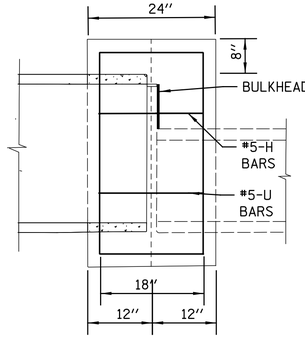

PROFILE
(DIFFERENT DIAMETERS)

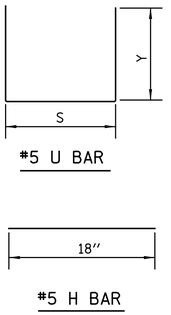

#5 U BAR

#5 H BAR

CONRETE COLLAR NOTES:

1. ALL ITEMS AND MATERIALS SHALL CONFORM TO THE LATEST IDOT SSRBC SPECIFICATIONS, UNLESS OTHERWISE NOTED IN SUPPLEMENTAL SPECIFICATIONS FOR THE SPECIFIC PROJECT BEING CONSTRUCTED.

2. ALL CONCRETE SHALL CONFORM TO IDOT SSRBC ARTICLE 1020.04, CLASS SI, WITH A COMPRESSIVE STRENGTH OF 3500 PSI.

3. ALL EPOXY COATED REINFORCEMENT BARS SHALL CONFORM TO IDOT SSRBC SECTION 508, AND ARTICLE 1006.10.

4. UNLESS OTHERWISE SHOWN, THE COVER FOR REINFORCING STEEL SHALL BE AS FOLLOWS: A.) CONCRETE CAST AGAINST PERMANENTLY EXPOSE EARTH: 3" B.) ALL OTHER REINFORCING BARS: 2"

5. CONCRETE COLLARS SHALL BE USED AT ALL EXISTING/PROPOSED PIPE CONNECTIONS. TRIM EXISTING PIPE END TO PROVIDE FLUSH BUTT JOINT, INSTALL REBAR, AND PLACE CONCRETE COLLAR.

6. THE CONTRACTOR SHALL PROVIDE ALL MEASURES AND PRECAUTIONS NECESSARY TO PREVENT DAMAGE TO THE EXISTING SEWER DURING CONSTRUCTION. CONTRACTOR SHALL ADEQUATELY BRACE OR SHORE EXISTING SEWER IF REQUIRED TO MAINTAIN INTEGRITY OF SEWER DURING CONSTRUCTION. SUBMIT DESIGN AND DETAILS, SEALED AND SIGNED BY AN ILLINOIS LICENSED STRUCTURAL ENGINEER, SHOWING TEMPORARY BRACING FOR THE EXISTING SEWER DURING CONSTRUCTION FOR REVIEW PRIOR TO CONSTRUCTION. ANY DAMAGE TO EXISTING STRUCTURE IS RESPONSIBILITY OF THE CONTRACTOR.

7. CONTRACTOR SHALL DIVERT ALL FLOW FROM THE EXISTING SEWER PRIOR TO CONSTRUCTION SO THAT THE WORK CAN BE PERFORMED IN THE DRY CONDITION. SEWER MUST BE MAINTAINED IN SERVICE AT ALL TIMES. SUBMIT MEANS OF FLOW DIVERSION FOR REVIEW PRIOR BREAKING INTO EXISTING BRICK SEWER. ALL EXCAVATION SHALL BE KEPT DEWATERED DURING CONSTRUCTION OPERATIONS UNTIL BACKFILL IN PLACE. PROVISIONS SHALL BE MADE TO PREVENT THE BOTTOM OF ALL EXCAVATIONS FROM FREEZING OR FLOODING AT ALL TIMES. PLAN DIMENSIONS AND DETAILS RELATIVE TO EXISTING STRUCTURE SHALL BE SUBJECT TO NOMINAL CONSTRUCTION VARIATIONS. IT SHALL BE CONTRACTOR'S RESPONSIBILITY TO VERIFY SUCH DIMENSIONS AND DETAILS IN THE FIELD AND MAKE NECESSARY APPROVED ADJUSTMENTS PRIOR TO CONSTRUCTION OR ORDERING MATERIALS. SUCH VARIATIONS SHALL NOT BE CAUSE FOR ADDITIONAL COMPENSATION FOR A CHANGE IN THE SCOPE OF THE WORK, HOWEVER, CONTRACTOR WILL BE PAID FOR THE QUANTITY ACTUALLY FURNISHED AT THE UNIT PRICE OF THE WORK.

EXAMPLE TYPICAL BRICK SEWER CONNECTION FOR CONNECTING PIPE SIZES GREATER THAN 12" DIA.

(NOT TO SCALE)

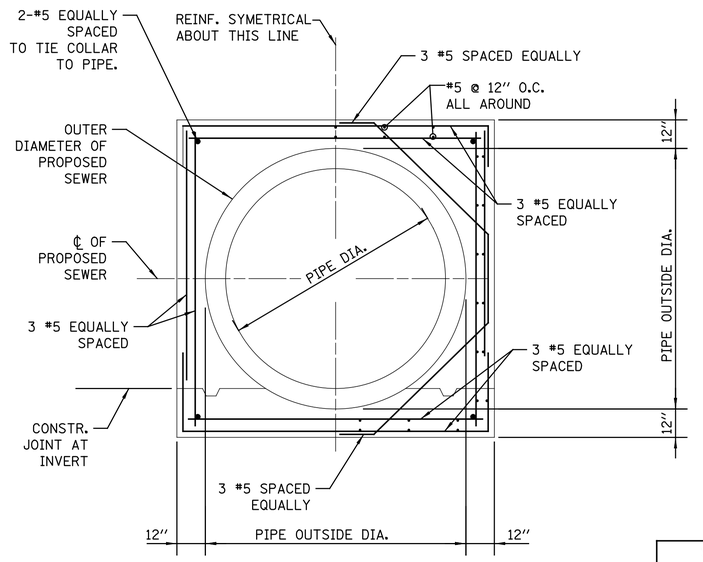

EXAMPLE CONCRETE COLLAR REINFORCEMENT - SECTION

(NOT TO SCALE)

NOTES

1. IF DIFFERENT PIPE SIZES ARE BEING CONNECTED, STEEL REINFORCEMENT BARS SHALL BE SUPPLIED AS GIVEN IN TABLE BELOW FOR THE LARGER DIAMETER PIPE.

2. CONTRACTOR SHALL PROVIDE BULKHEAD TO KEEP CONCRETE FROM SPILLING INTO LARGER PIPE. BULKHEAD MUST BE REMOVED, OR LEFT IN PLACE, ONLY AS APPROVED BY THE COMMISSIONER.

PIPE TO PIPE REINFORCED CONCRETE COLLAR DETAIL

SCALE: N.T.S.

D	T	W	U BAR			TOTAL	H BAR		TOTAL	CLASS SI	
PIPE DIA.	PIPE THICKNESS	WIDTH	X	Y	QTY	LENGTH	S	QTY	LENGTH	CONCRETE	#5 EPOXY REBAR
(IN)	(IN)	(IN)	(IN)	(IN)	(EACH)	(FT)	(IN)	(EACH)	(FT)	(CU YD)	(LBS)
24	3.00	46.0	40.00	28.00	4	32.0	9 5/8	16.0	24.0	0.72	58.4
27	3.25	49.5	43.50	29.75	4	34.3	10 1/2	16.0	24.0	0.81	60.8
30	3.50	53.0	47.00	31.50	4	36.7	11 3/8	16.0	24.0	0.89	63.3
33	3.75	56.5	50.50	33.25	4	39.0	9 4/5	20.0	30.0	0.98	72.0
36	4.00	60.0	54.00	35.00	4	41.3	10 1/2	20.0	30.0	1.07	74.4
42	4.50	67.0	61.00	38.50	4	46.0	9 7/8	24.0	36.0	1.26	85.5
48	5.00	74.0	68.00	42.00	4	50.7	11 1/8	24.0	36.0	1.46	90.4

STANDARD REVISIONS	
DATE	DESCRIPTION
7/3/2018	APPROVED PLAN

PERCENT COMPLETE	DATE
30	01-14-19
60	04-19-19
75	08-02-19
90	09-23-19
100	11-09-20
BULLETIN	

CITY OF CHICAGO
DEPARTMENT OF WATER MANAGEMENT
BUREAU OF ENGINEERING SERVICES

CONCRETE COLLAR / CONNECTION DETAILS

DRAWN: SBW
DESIGNED:
CHECKED:
REVIEWED:

A.19

25 OF 30

PN 7445

$FILENAME$
$DATE$

STANDARD DRAINAGE STRUCTURES FOR PUBLIC STREETS

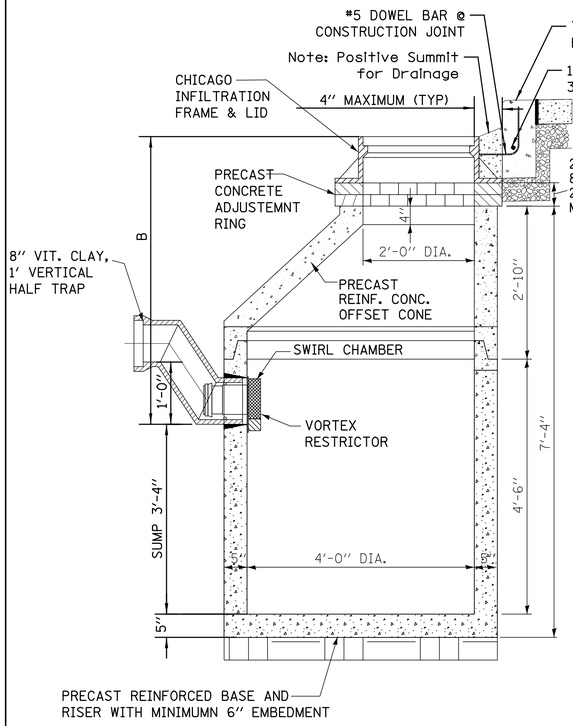

STANDARD CATCH BASIN-4' DIA.

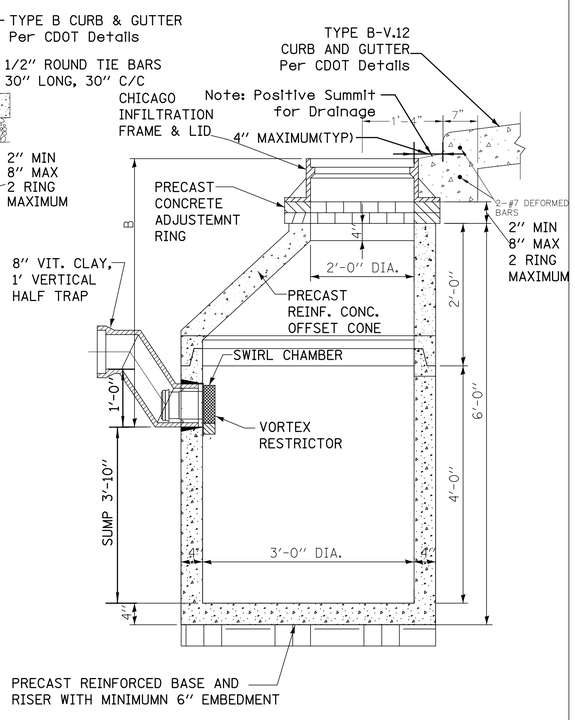

STANDARD CATCH BASIN-3' DIA.

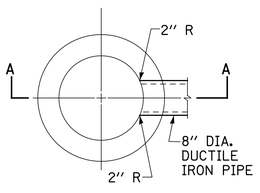

PLAN

(FRAME & LID NOT SHOWN)

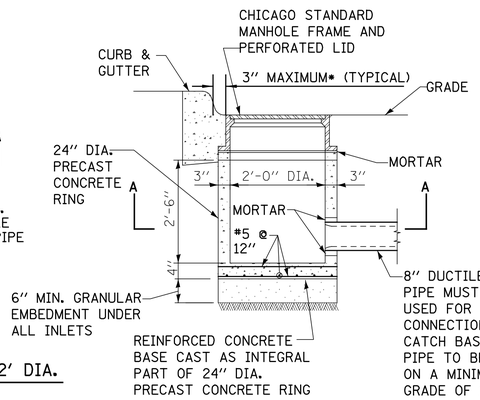

STANDARD INLET-2' DIA.

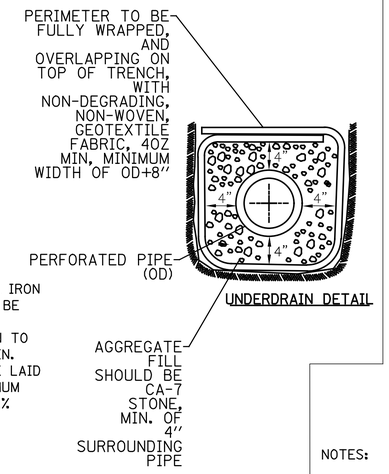

UNDERDRAIN DETAIL

NOTE:
INLETS AND 3' DIAMETER CATCH BASINS ARE TO BE USED ONLY WITH PRIOR APPROVAL OF DWM SEWER ENGINEER OR FIELD INSPECTOR.

1. FOR TRENCH BACKFILL, REFER TO IDOT SSRBC, ARTICLE 1003.04.

2. FOR GRANULAR EMBEDMENT, USE CA-11, CRUSHED GRAVEL, CRUSHED STONE, OR CRUSHED CONCRETE.

3. FOR STABILIZATION STONE, 12" OF CA-1 STONE IS ONLY REQUIRED WHEN UNSTABLE MATERIAL IS ENCOUNTERED AT TRENCH BOTTOM.

*OUTER EDGE OF FRAME TO FACE OF CURB

STANDARD DRAINAGE STRUCTURES FOR PUBLIC ALLEYS

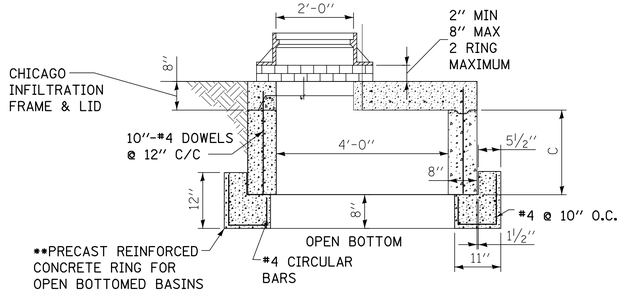

GREEN ALLEY OPEN BOTTOM CATCH BASIN

TO BE USED IF STANDARD CONE WITH REQUIRED SUMP DEPTH INSTALLATION IS IMPOSSIBLE.

**IF FLAT TOP SLAB CATCH BASIN IS USED IN AN OPEN BOTTOM APPLICATION, THE FOLLOWING CRITERIA MUST BE FOLLOWED:

-"C" MUST BE A MINIMUM OF 3 FEET.

- PROVIDE A MINIMUM AGGREGATE BASE OF 1.0 FEET BELOW PRECAST REINFORCED CONCRETE RING.

-GEOTECH FABRIC MUST BE PLACED ON SIDES AND BOTTOM OF AGGREGATE SURROUNDING BASIN.

-AGGREGATE BASE MUST PROVIDE ADEQUATE STORMWATER STORAGE CAPACITY PER THE APPROVED/PERMITTED PLANS.

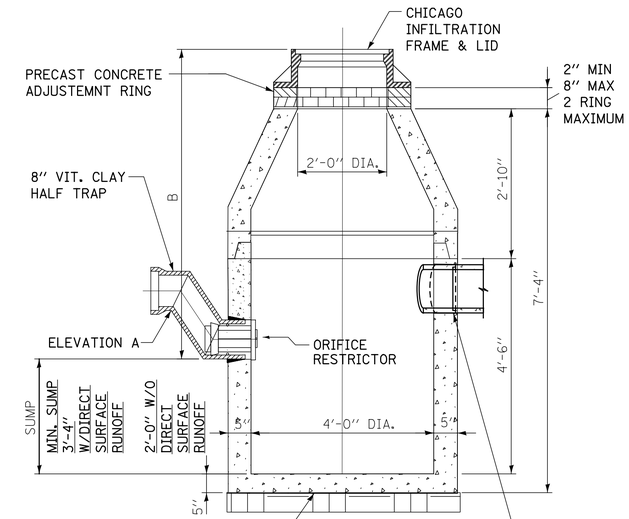

CATCH BASIN-ORIFICE RESTRICTOR

N.T.S.

NOTES:

1. FOR ANY DRAIN TILE CONNECTION, THE WATER TABLE MUST BE AT LEAST 3.5 FEET BELOW ELEVATION A.

2. PVC UNDERDRAINS MUST BE 4" MINIUMUM DIAMETER, (6" RECOMMENDED) AND MUST BE WRAPPED IN GEOTECH FABRIC.

STANDARD REVISIONS	
DATE	DESCRIPTION
10/27/17	APPROVED

DRAINAGE STRUCTURES RESTRICTORS

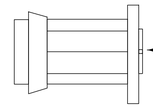

ORIFICE RESTRICTOR

INSERT THE RESTRICTOR INTO THE HALF-TRAP. UPON TIGHTENING OF THE CENTER NUT ON THE FACE OF THE RESTRICTOR, THE RUBBER O-RINGS WILL EXPAND INSIDE THE HALF TRAP, PROVIDING A WATER- TIGHT SEAL. PULL ON RESTRICTOR TO VERIFY THAT A TIGHT FIT IS MADE.

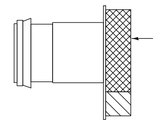

VORTEX RESTRICTOR

PULL ON RESTRICTOR TO VERIFY THAT A TIGHT FIT IS MADE.

INSERT THE RESTRICTOR WITH THE OPENING DOWN. UPON TIGHTENING OF THE 2 BOLTS ON THE FACE OF THE RESTRICTOR, THE RUBBER O-RINGS WILL PROVIDE A WATER- TIGHT SEAL.

GENERAL NOTES:

1. CATCH BASIN TO CATCH BASIN CONNECTIONS ARE ALLOWED IN PRIVATE SITES & ALLEYS. ONLY THE DOWNSTREAM CATCH BASIN IS REQUIRED TO HAVE A HALF-TRAP.

2. IF B < 4 FEET, THEN USE A DUCTILE IRON PIPE HALF TRAP AND FLAT TOP SLAB CATCH BASIN AS NECESSARY.

3. INLETS AND 3' DIAMETER CATCH BASINS ARE TO BE USED ONLY
WITH PRIOR APPROVAL OF DWM FIELD INSPECTOR.

RESTRICTOR NOTES:

THE DWM'S RAIN BLOCKER RESTRICTOR PROGRAM MUST BE MAINTAINED WITH ANY ROADWAY IMPROVEMENT.

THE DESIGN OF ANY ROADWAY IMPROVEMENT MUST CONSIDER LIMITING THE NUMBER OF CATCH BASINS TO THE EXTENT PRACTICAL. THE NUMBER OF EXISTING STRUCTURES SHOULD NOT BE INCREASED.

THE RESTRICTORS CAN BE OBTAINED FROM DWM CENTRAL DISTRICT AT 3901 S. ASHLAND AVE. THE CONTRACTOR SHOULD ARRANGE FOR PICK UP BY CONTACTING 312-747-8736 (7AM TO 3PM, M-F). CONTRACTOR MUST CALL 48 HOURS IN ADVANCE OF PICK UP DATE AND TIME.

FLOW RESTRICTORS MUST BE INSTALLED IN ALL CATCH BASINS OUTSIDE OF THE CENTRAL BUSINESS DISTRICT. RESTRICTORS MUST NOT BE INSTALLED IN CATCH BASINS IN CLOSE PROXIMITY TO VIADUCT AREAS, BUS STOPS, OR EMERGENCY ENTRANCES. THE DWM MUST APPROVE THE NON-INSTALLATION OR REMOVAL OF ANY RESTRICTOR. REQUIREMENTS FOR RESTRICTOR INSTALLATION ARE AS FOLLOWS:

*ARTERIAL STREETS: 3-INCH ORIFICE RESTRICTOR
*BUS ROUTES: 3-INCH ORIFICE RESTRICTOR
*RESIDENTIAL STREETS: 3-INCH VORTEX RESTRICTOR
*ALLEYS: 3-INCH ORIFICE RESTRICTOR IN THE LAST CB.
*CLOSED LIDS ARE REQUIRED ON ALL MANHOLES EXCEPT AT INTERSECTIONS WHERE A PERFORATED LID SHALL BE USED.

PERCENT COMPLETE	DATE
30	01-14-19
60	04-19-19
75	08-02-19
90	09-23-19
100	11-09-20
BULLETIN	

CITY OF CHICAGO
DEPARTMENT OF WATER MANAGEMENT
BUREAU OF ENGINEERING SERVICES

DRAINAGE STRUCTURE DETAILS

DRAWN: SBW
DESIGNED:
CHECKED:
REVIEWED:

A.20

26 OF 30

PN 7445

$FILE$
$DATE$

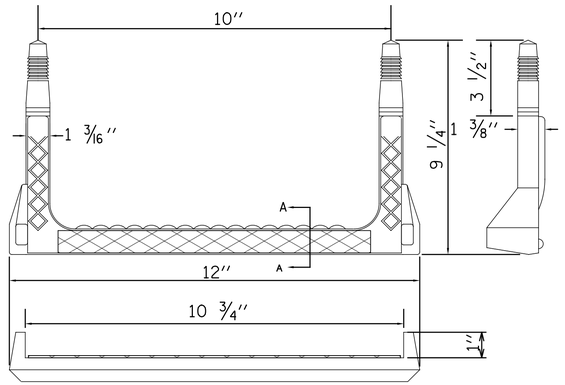

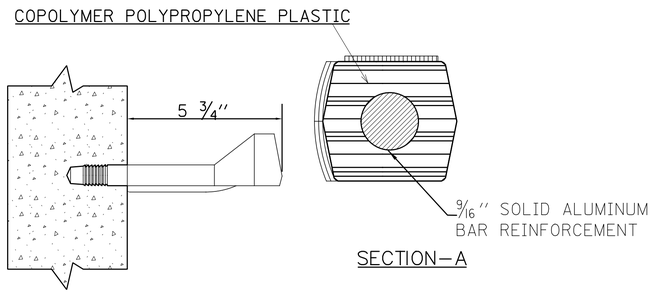

SECTION–A

RECTANGULAR STEP LADDER RUNG

FOR USE ONLY IN 48'' DIAMETER
AND LARGER MANHOLES.

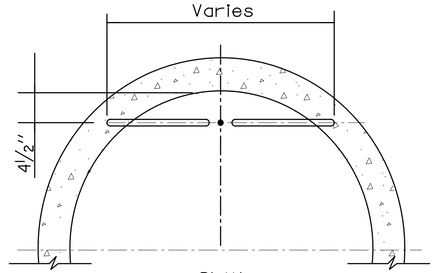

PLAN

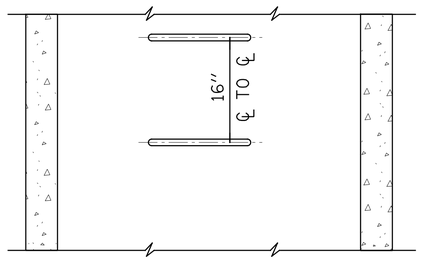

ELEVATION
TYPE X
RISER

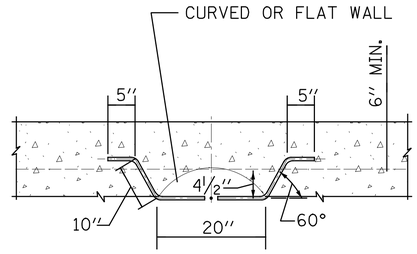

PLAN

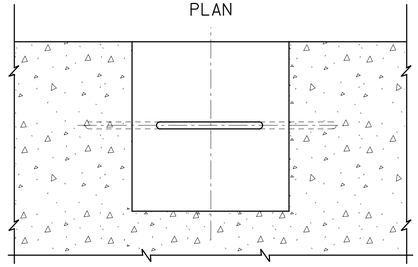

ELEVATION
TYPE Y
BASE

NOTES:

1. VERTICAL SPACING = 16'' O.C., ON VERTICAL WALL ONLY.

2. STEPS SHALL MEET THE REQUIREMENTS OF ASTM C478 IN ADDITION TO A HORIZONTAL PULL-OUT LOAD OF 1000 LBS. WHEN INSTALLED.

3. ALL STEPS SHALL BE VERTICALLY ALIGNED IN A STRAIGHT LINE.

4. MINIMUM CONCRETE STRENGTH MUST BE 3000 PSI

5. HOLES- PREFORMED/DRILLED
   A. HOLES MUST BE PARALLEL
   B. HOLES MUST BE 10'' CENTERED, 1'' DIAMETER
   C. MINIMUM DEPTH- 3 1/2'' TO 3 3/4''

STANDARD REVISIONS	
DATE	DESCRIPTION
5/8/17	APPROVED PLAN

PERCENT COMPLETE	DATE
30	01-14-19
60	04-19-19
75	08-02-19
90	09-23-19
100	11-09-20
BULLETIN	

CITY OF CHICAGO
DEPARTMENT OF WATER MANAGEMENT
BUREAU OF ENGINEERING SERVICES

LADDER RUNGS

DRAWN: SBW
DESIGNED:
CHECKED:
REVIEWED:

A.22

27 OF 30

PN 7445

$FILE$
$DATE$

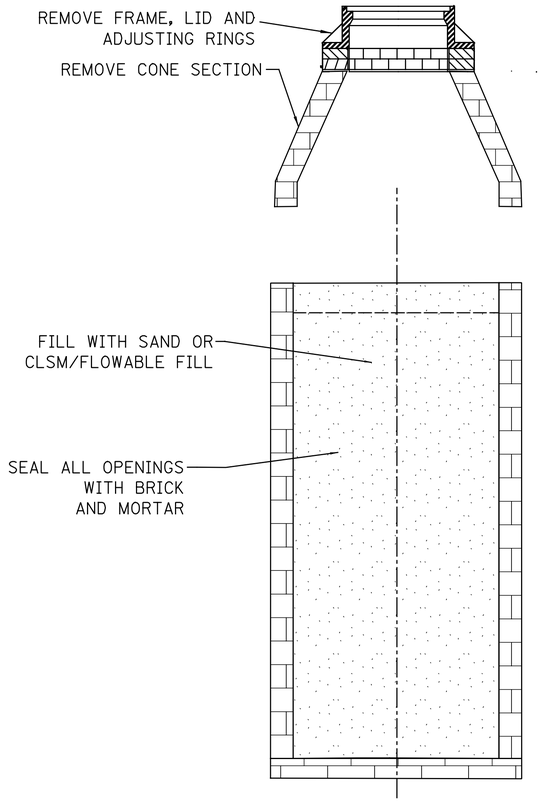

ABANDON CATCH BASIN

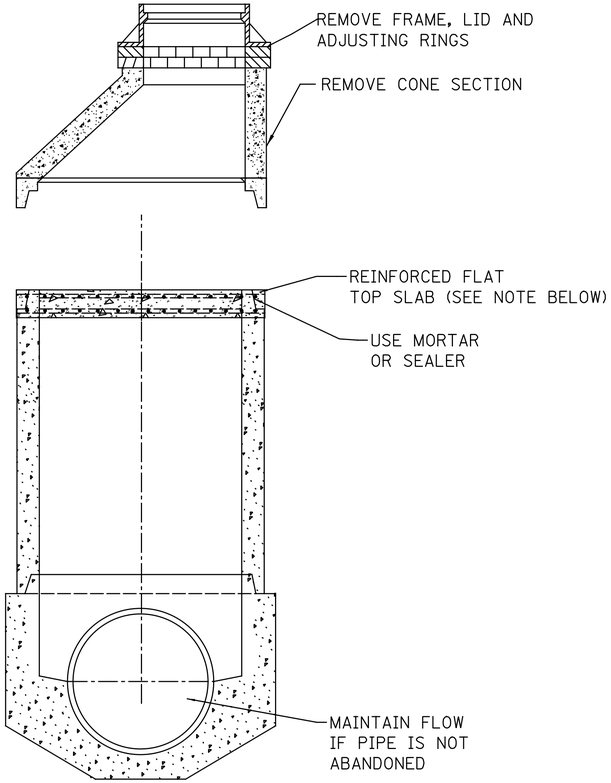

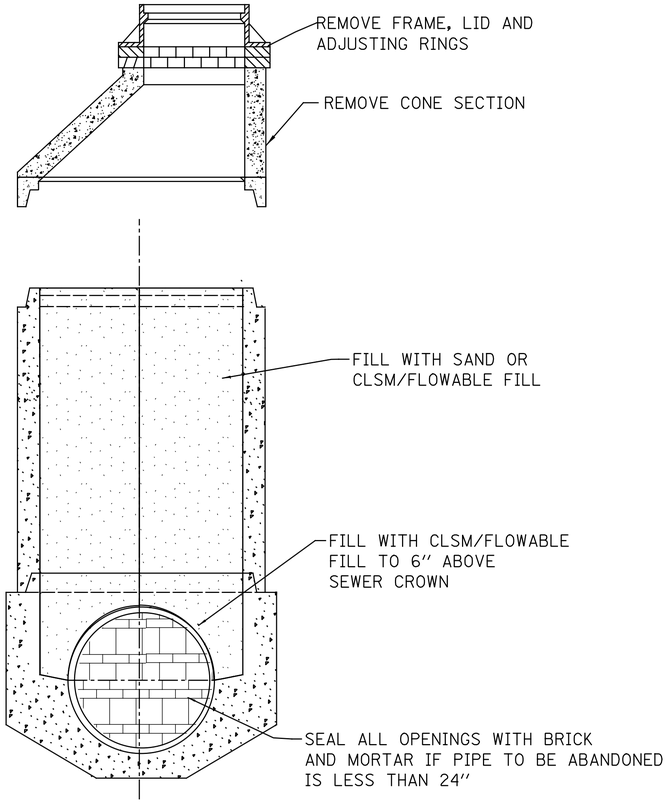

ABANDON MANHOLES

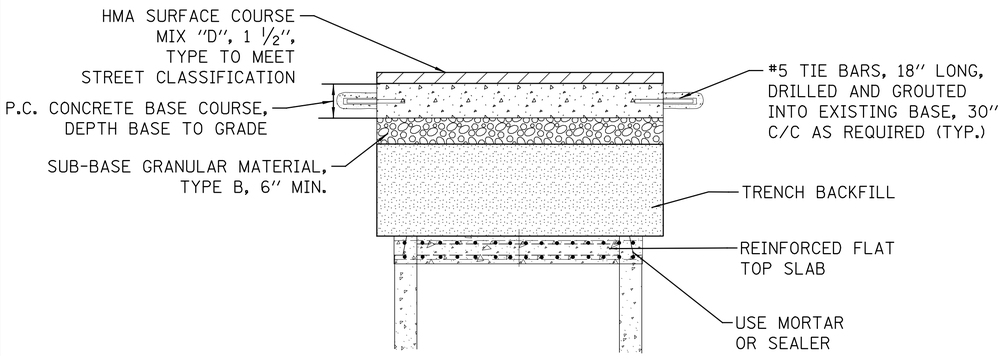

IN PAVEMENT AREA

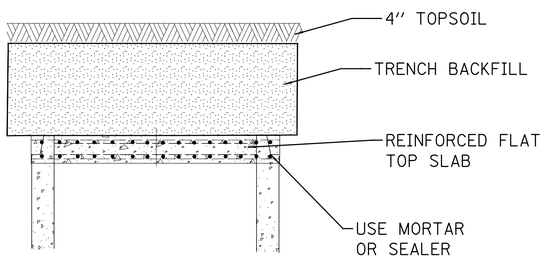

IN LANDSCAPE AREA

NOTE
REINFORCED FLAT TOP SLAB.
SEE IDOT STD. 602601-03 OR CURRENT MODIFIED WITH NO ACCESS HOLE

STANDARD REVISIONS	
DATE	DESCRIPTION
10/15/15	APPROVED PLAN

PERCENT COMPLETE	DATE
30	01-14-19
60	04-19-19
75	08-02-19
90	09-23-19
100	11-09-20
BULLETIN	

CITY OF CHICAGO
DEPARTMENT OF WATER MANAGEMENT
BUREAU OF ENGINEERING SERVICES

ABANDONED SEWER STRUCTURE DETAILS

DRAWN: SBW
DESIGNED:
CHECKED:
REVIEWED:

A.23

28 OF 30

PN 7445

TYPE III TEMPORARY SUPPORT

ONLY FOR 6", 8" AND 12" WATER MAINS

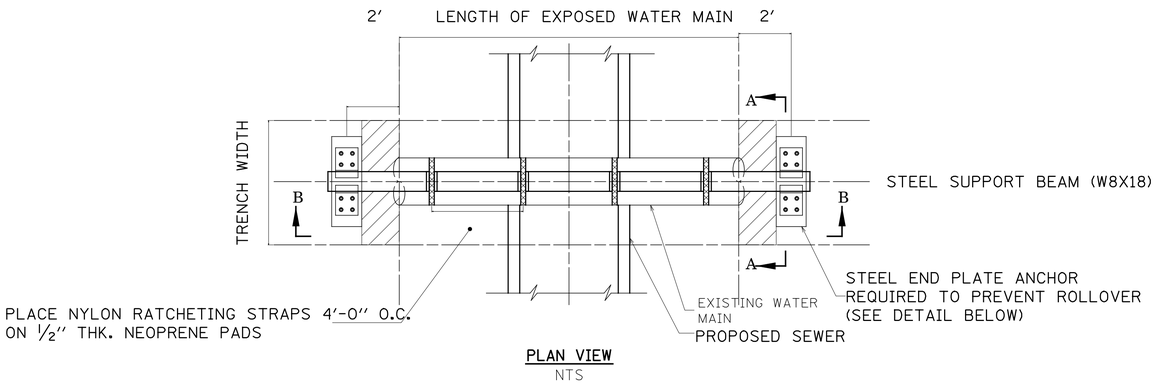

PLAN VIEW
NTS

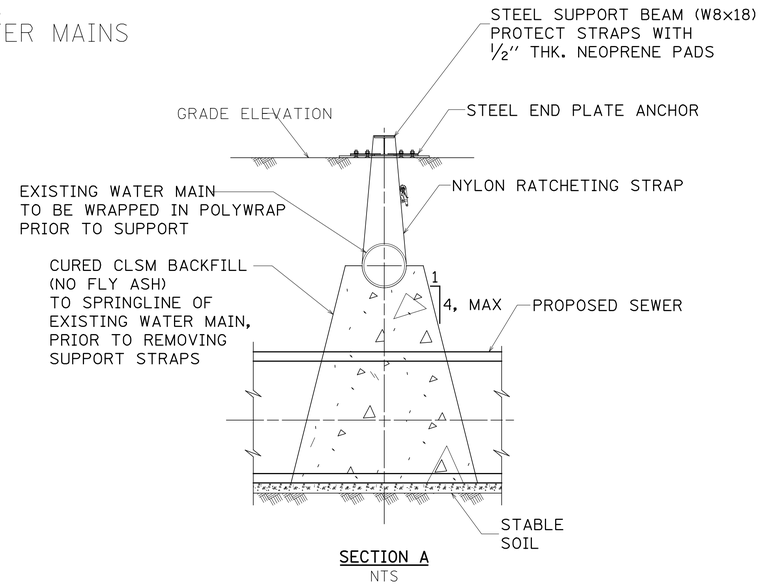

SECTION A
NTS

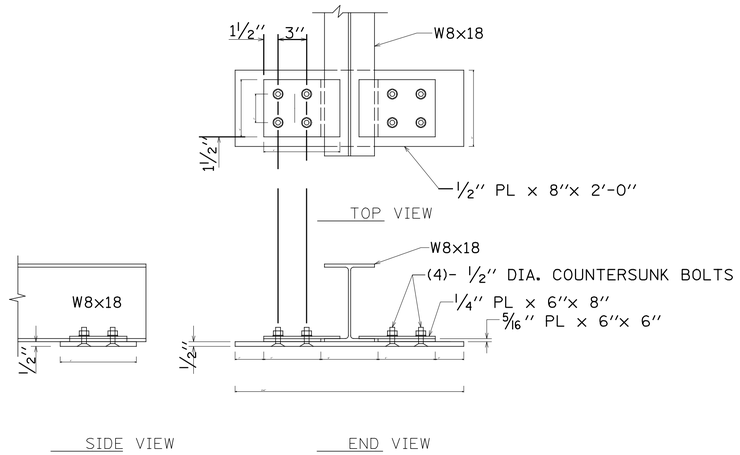

STEEL END PLATE ANCHOR DETAIL
NTS

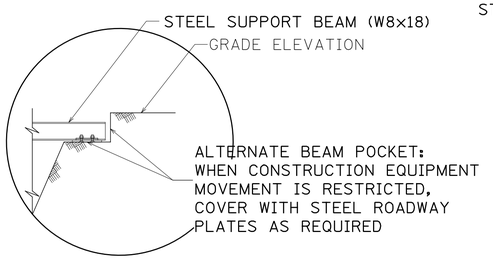

ALTERNATE BEAM POCKET DETAIL
NTS

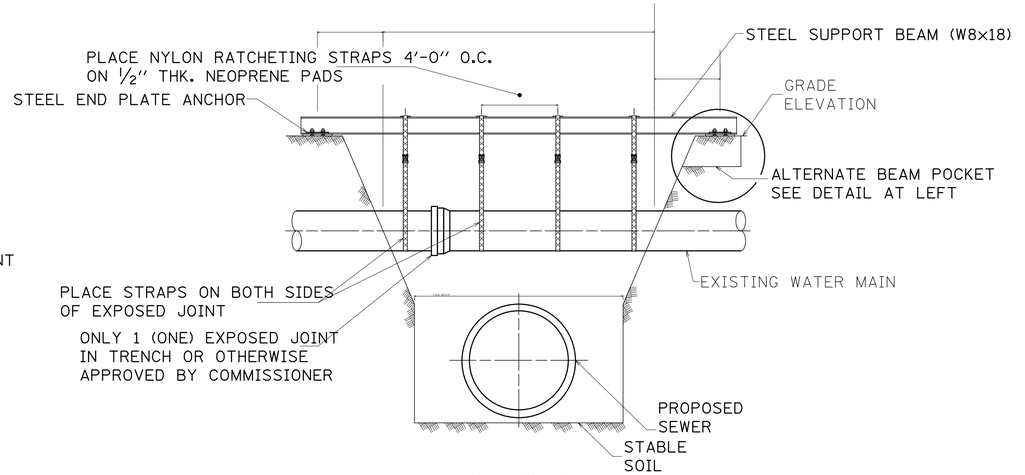

SECTION B
NTS

GENERAL NOTES FOR TYPE III SUPPORT:

1. THIS DETAIL APPLIES TO 6", 8" AND 12" WATER MAINS. WATER MAINS 16" AND GREATER REQUIRE A TYPE I OR TYPE II SUPPORT.
2. STRUCTURAL STEEL BEAMS SHALL CONFORM TO ASTM SPEC. A992. GENERAL PURPOSE STRUCTURAL STEEL PLATES SHALL CONFORM TO ASTM SPEC. A36.
3. EACH NYLON RATCHETING STRAP MUST HAVE RATED TENSILE STRENGTH GREATER THAN OR EQUAL TO 1,500 LBS. CONTRACTOR TO VERIFY THAT NEW STRAPS ARE USED AND ARE IN GOOD CONDITION DURING THE TEMPORARY SUPPORT OF THE MAIN. CONTRACTOR IS TO MONITOR THE WATER MAIN DURING THE SUPPORT TO ENSURE ZERO MOVEMENT OF THE PIPE AND NO ELONGATION OF THE STRAPS. IF THE STRAPS ARE EXPOSED TO CHEMICALS (SUCH AS CHLORINE), OR ULTRAVIOLET LIGHT, WET/DRY CYCLES, OR FREEZE/THAW CYCLES, THE CONTRACTOR MUST VERIFY THAT THE STRAPS ARE IN GOOD CONDITION OR MUST REPLACE THEM AS NECESSARY.

PERCENT COMPLETE	DATE
30	
60	
75	
90	
100	5/21/19
BULLETIN	

PERCENT COMPLETE	DATE
30	01-14-19
60	04-19-19
75	08-02-19
90	09-23-19
100	11-09-20
BULLETIN	

CITY OF CHICAGO
DEPARTMENT OF WATER MANAGEMENT
BUREAU OF ENGINEERING SERVICES

WATER MAIN SUPPORT TYPE III

DRAWN:	
DESIGNED:	
CHECKED:	
REVIEWED:	

29 OF 30

PN 7445

$FILEL$
$DATE$

TYPE I SUPPORT- TYPE A & B

TYPE I SUPPORT STRUCTURE REMAINS IN PLACE.
(USE WHEN SEWER WILL BE INSTALLED AT A FUTURE DATE OR JOB SITE CONDITIONS WILL NOT ACCOMODATE TYPE II SUPPORT INSTALLATION)

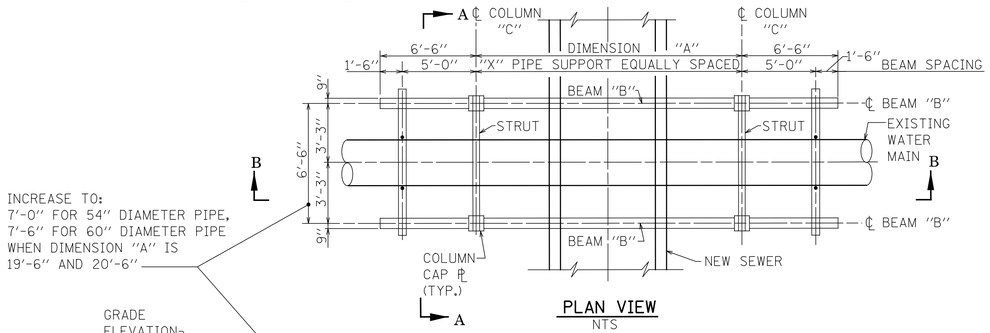

PLAN VIEW
NTS

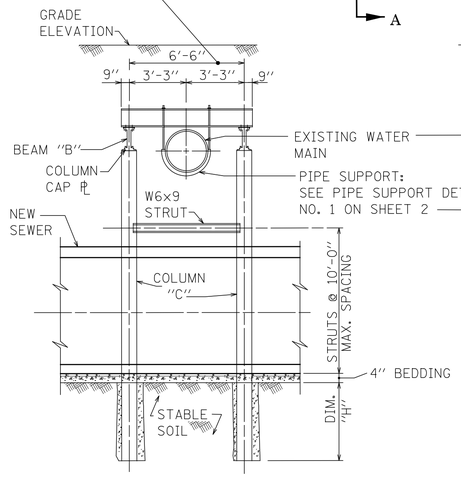

TYPE A - SECTION A
NTS

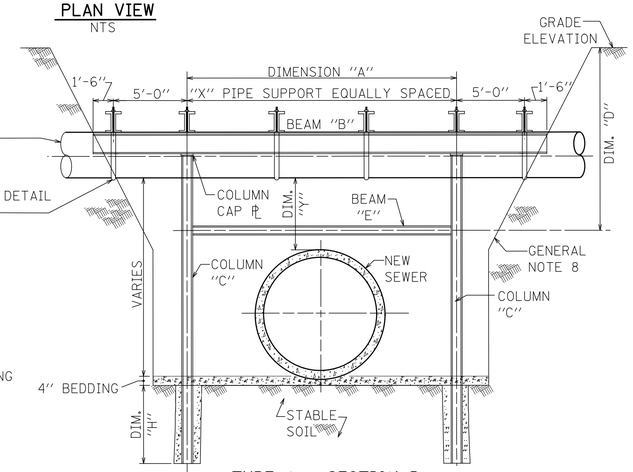

TYPE A - SECTION B
NTS

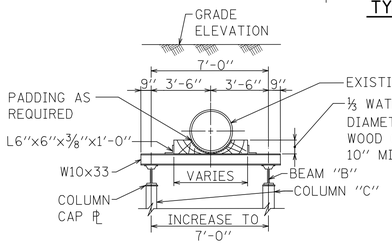

TYPE B - SECTION A
NTS

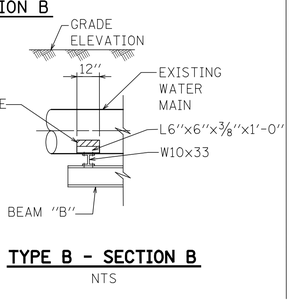

TYPE B - SECTION B
NTS

TYPE I SUPPORT NOTES- TYPE A & B:

1. SEE TYPE I SUPPORT TABLE ON SHEET 2 FOR BEAM MEMBER SIZES.
2. TYPE "A" SUPPORTS EXISTING WATER MAIN UNDERHUNG FROM CROSS BEAMS. TYPE "B" SUPPORTS EXISTING WATER MAIN BEARING ON TOP OF CROSS BEAMS. WHEN DIMENSION "Y" IS LESS THAN 2'-6" TYPE "A" SUPPORT MUST BE USED. MINIMUM DIMENSION "Y" FOLLOW IEPA REGULATIONS.
3. BACKFILL WITH CRUSHED STONE FILL MATERIAL OR CLSM AS REQUIRED.

TYPE II SUPPORT

TYPE II SUPPORT STRUCTURE WILL BE REMOVED.
(USE WHEN SEWER WILL BE INSTALLED IMMEDIATELY)

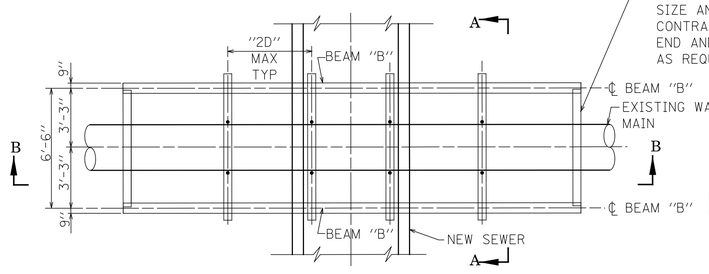

PLAN VIEW
NTS

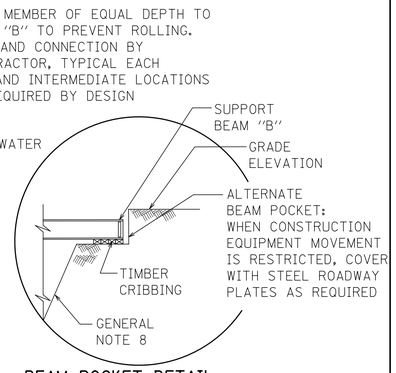

BEAM POCKET DETAIL
NTS

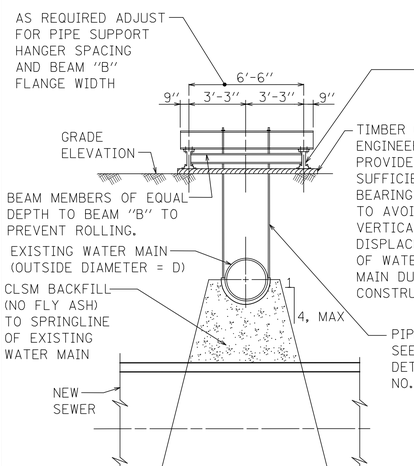

SECTION A
NTS

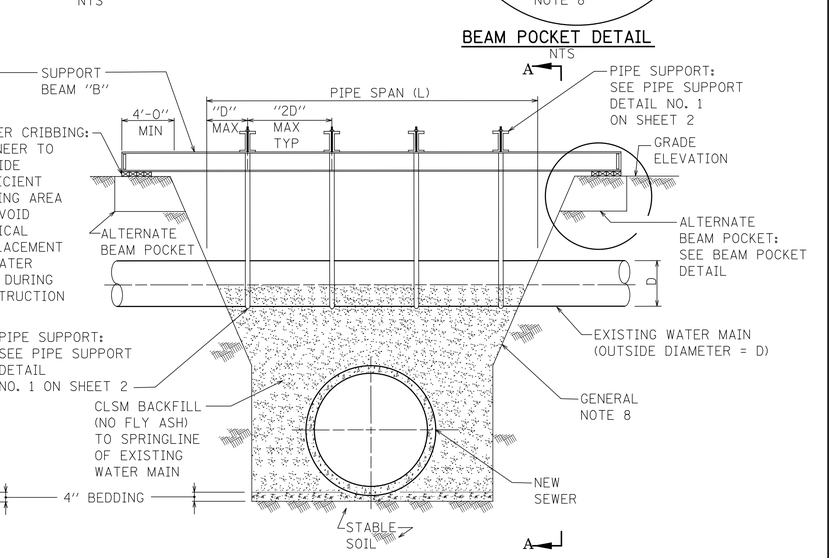

SECTION B
NTS

TYPE II SUPPORT NOTES:

1. THIS DETAIL APPLIES TO THE TEMPORARY SUPPORT OF EXISTING WATER MAINS UP TO 60 INCH INSIDE DIAMETER. SUPPORT BEAMS, CROSS BEAMS, PIPE SUPPORT, AND TIMBER CRIBBING MUST BE REMOVED AFTER CLSM BACKFILL HAS ATTAINED THE COMPRESSIVE STRENGTH THAT SATISFIES THE ENGINEER.
2. CONTRACTOR TO MONITOR CCP EXPOSED GROUTED JOINTS FOR SIGNS OF CRACKING WHILE THE PIPE IS SUPPORTED. IF SMALL CRACKS APPEAR, FILL WITH A FAST SETTING, PORTLAND CEMENT WATER STOP (SIKASET PLUG OR APPROVED EQUAL).

SUPPORT OF EXISTING WATER MAIN CAST IRON, DUCTILE IRON OR CONCRETE CYLINDER PIPE

GENERAL NOTES FOR TYPE I & II SUPPORTS:

1. TYPE II SUPPORT IS CDWM PREFERRED SUPPORT METHOD. USE TYPE I SUPPORT WHEN SEWER WILL BE INSTALLED AT A FUTURE DATE REQUIRING A SECOND EXCAVATION. TYPE I SUPPORT MUST ALSO BE INSTALLED WHEREVER JOB SITE CONDITIONS WILL NOT ACCOMODATE TYPE II SUPPORT TO BE INSTALLED (SUCH AS LOCATIONS WHERE THE WIDTH OF EXCAVATION WOULD CREATE EXCESSIVE ROADWAY LANE CLOSURES). IT IS THE RESPONSIBILITY OF THE CONTRACTOR TO SELECT THE APPROPRIATE TYPE OF PIPE SUPPORT METHOD FOR CONDITIONS AT THE JOB SITE, OR AS DIRECTED BY THE COMMISSIONER.
2. THESE DETAILS ARE PROVIDED FOR REFERENCE ONLY AND DO NOT REPRESENT A COMPLETE DESIGN. THE CONTRACTOR MUST COMPLETE THE DESIGN FOR EACH LOCATION WHERE WATER MAIN SUPPORT IS TO BE IMPLEMENTED. THE COMPLETE DESIGN MUST INCLUDE (BUT NOT LIMITED TO) STRUCTURAL STEEL CONNECTION DETAILS, COLUMN BRACE SIZE AND SPACING, CONSIDERATION OF BEAM BEARING LOADS ON EXISTING ROADWAY SURFACES OR GRADE, EFFECTS OF BUOYANCY ON THE NEW SEWER DUE TO FLOWABLE CLSM, FOUNDATION DEPTH AND DIAMETER BASED ON BEST AVAILABLE SOIL DATA, AND DESIGN FOR SUPPORT OF EXCAVATIONS.
3. THESE DETAILS WERE DEVELOPED FOR SUPPORT OF WATER MAINS UP TO 60 INCHES IN DIAMETER, UP TO 6 FEET OF COVER AND AASHTO HS 20-44 WHEEL LOADS.
4. DUCTILE IRON PIPE MUST BE WRAPPED IN POLYETHYLENE PRIOR TO PLACEMENT OF BACKFILL.
5. THE CONTRACTOR MUST SUBMIT SHOP DRAWINGS AND CALCULATIONS FOR THE SUPPORT METHOD USED STAMPED BY A LICENSED STRUCTURAL ENGINEER IN THE STATE OF ILLINOIS. THE DESIGN MUST TAKE INTO ACCOUNT THE ACTUAL FIELD VERIFIED DIMENSIONS, SPANS, AND TRIBUTARY LOADING WHICH MAY EXCEED VALUES SHOWN. DMW MAINTAINS A RECORD OF BURIED TYPE I SUPPORT STRUCTURES AND THEIR LOCATIONS. THE CONTRACTOR MUST FURNISH AS - BUILT DRAWINGS FOR THIS RECORD.
6. THE DESIGN OF THE MAIN SUPPORT BEAM "B" MUST LIMIT TOTAL DEFLECTION OF THE PIPE TO L/480 OF THE PIPE SPAN (L).
7. MATERIAL PROPERTIES MUST MEET THE FOLLOWING CRITERIA:

W-SHAPES	ASTM A992 GRADE 50
CHANNELS	ASTM A36
PLATES & BARS	ASTM A36
THREADED RODS	ASTM A36
HSS SHAPES	ASTM A500 GRADE B
HIGH STRENGTH BOLTS	ASTM A325 N-BOLTS
CLSM	IDOT STANDARD SPECIFICATIONS SECTION 1019 MIX 2

8. THE CONTRACTOR MUST SLOPE TRENCH WALLS OR SHORE EXCAVATIONS FOR CONSTRUCTION SAFETY AND IN ACCORDANCE WITH CURRENT OSHA REQUIREMENTS. THE OVERALL WIDTH OF EXCAVATION, TRAFFIC CONTROL, AND PROTECTION MUST BE SUBMITTED TO CDWM FOR REVIEW PRIOR TO THE START OF CONSTRUCTION.
9. OPEN EXCAVATIONS AND IN PLACE FLOWABLE CLSM BACKFILL MUST BE CORDONED OFF OR COVERED TO PROVIDE PROTECTION AGAINST ACCIDENTIAL FALLING.
10. REFER TO STANDARD SPECIFICATIONS FOR WATER MAIN CONSTRUCTION FOR ADDITIONAL INFORMATION.

STANDARD REVISIONS	
DATE	DESCRIPTION
05/10	

PERCENT COMPLETE	DATE
30	01-14-19
60	04-19-19
75	08-02-19
90	09-23-19
100	11-09-20
BULLETIN	

CITY OF CHICAGO
DEPARTMENT OF WATER MANAGEMENT
BUREAU OF ENGINEERING SERVICES

SUPPORT OF EXISTING WATER MAIN, CAST IRON, DUCTILE IRON, OR CONCRETE CYLINDER PIPE

DRAWN:
DESIGNED:
CHECKED:
REVIEWED:

1 OF 2

30 OF 30

PN 7445