CITY OF CHICAGO

LORI LIGHTFOOT

MAYOR

DEPARTMENT OF TRANSPORTATION

GIA BIAGI, COMMISSIONER

DIVISION OF ENGINEERING

DAN BURKE, P.E., S.E., MANAGING DEPUTY COMMISSIONER

CONTRACT PLANS

FOR CONSTRUCTION OF THE

DAMEN GREEN LINE STATION

154 NORTH DAMEN AVENUE

CHICAGO, ILLINOIS 60612

CDOT PROJECT NO. D-7-135

REQUISITION NO. 299860

SPECIFICATION NO. 118934

ISSUED BY:

DEPARTMENT OF PROCUREMENT SERVICES

CHIEF PROCUREMENT OFFICER

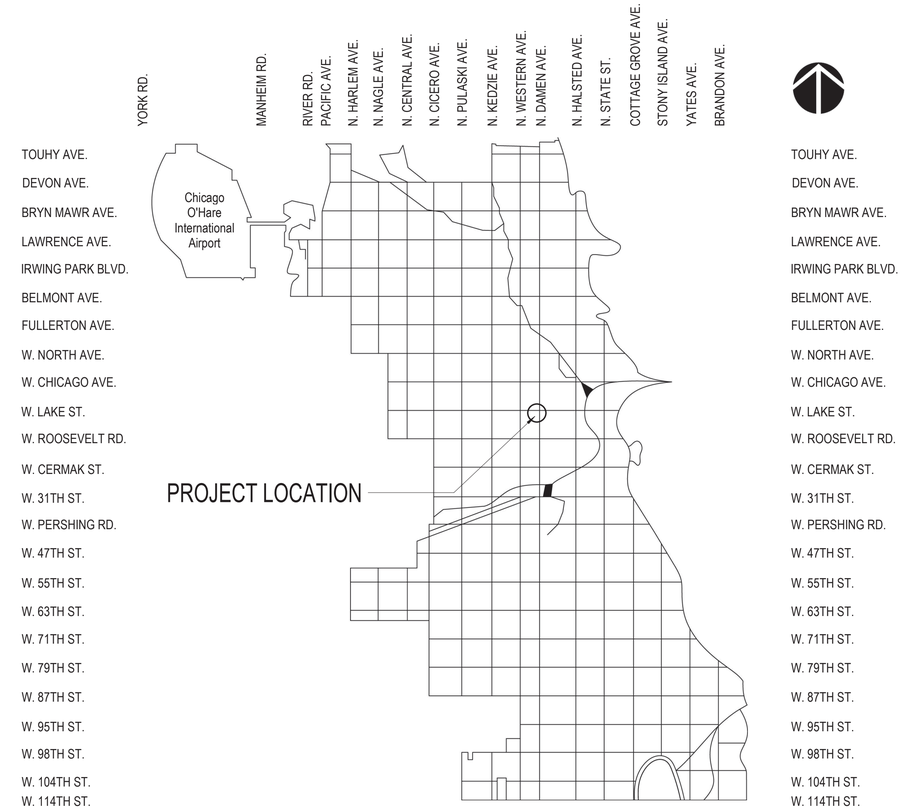

LOCATION MAP

FULL SIZE PLANS HAVE BEEN PREPARED USING STANDARD ENGINEERNIG SCALES. REDUCED SIZE PLANS WILL NOT CONFORM TO STANDARD SCALES. IN MAKING MEASUREMENTS ON REDUCED PLANS THE ABOVE SCALE MAY BE USED.

DIGGER: (312) 744-7000
CONTRACTOR SHALL CALL DIGGER TWO (2) WORKING DAYS (48 HOURS) BEFORE DIGGING.

CITY OF CHICAGO
DEPARTMENT OF TRANSPORTATION

ACTING COMMISSIONER — DATE 8/15/19

DEPUTY COMMISSIONER, DIVISION OF ENGINEERING — DATE

CHICAGO TRANSIT AUTHORITY
ENGINEERING DEPARTMENT

VICE PRESIDENT — DATE 8/20/19

CHIEF ENGINEER, INFRASTRUCTURE — DATE 8/20/19

ERIC J. LINDEMANN
NO. 062-051170
EXP. 11/30/2021
SHEETS: ALL C, CE SHEETS

TIMOTHY W. BARRY
NO. 062-055149
EXP. 11/30/2021
SHEETS: ALL TP SHEETS

ERIC J. TWOMEY
NO. 081-007709
EXP. 11/30/2020
SHEETS: S SHEETS (STATION, BRIDGE)

RAYMOND J. HEITNER
NO. 062.035147
EXP. 11/30/2021
SHEETS: ALL M, P SHEETS

OREN SKIDELSKY
NO. 062-053762
EXP. 11/30/2021
SHEETS: ALL E, EC SHEETS

JEFFERY D. FINE
NO. 062-061644
EXP. 11/30/2021
SHEETS: ALL CT SHEETS

KEVEN GRAHAM
NO. 157-000150
EXP. 08/31/2021
SHEETS: ALL L SHEETS

MARK RICHARD WALSH
NO. 001-016935
EXP. 11/30/2020
SHEETS: ALL G, A, AG SHEETS

JOSEPH T. ZURAD
NO. 33694
EXP. 11/30/2021
SHEETS: T SHEETS

CHRISTOPHER M. HEWITT
NO. 081-006590
EXP. 11/30/2020
SHEETS: S SHEETS (TRACK)

SHEET NUMBER	SHEET NAME	ISSUE FOR PERMIT	ISSUE FOR OUC EFP	BUILDING PERMIT CORRECTIONS 1	ISSUE FOR BID	BUILDING PERMIT CORRECTIONS 2	BUILDING PERMIT CORRECTIONS 3	ISSUE FOR BID - REVISION 1
01-GENERAL								
G00-00	COVER	•	•	•	•	•	•	•
G00-01	DRAWING INDEX - PART 1	•	•	•	•	•	•	•
G00-02	DRAWING INDEX - PART 2	•	•	•	•	•	•	•
G10-00	GENERAL PROJECT NOTES	•		•	•			
G20-00	SUGGESTED CONSTRUCTION SEQUENCE				•			
G30-00	GEOMETRY PLAN	•		•	•			
G40-00	CODE COMPLIANCE DATA	•		•	•			
G40-01	CODE COMPLIANCE DATA - ELEVATORS	•		•	•			
G40-10	CODE COMPLIANCE PLANS	•		•	•			
G40-11	CODE COMPLIANCE SECTIONS	•		•	•			
G40-20	CERTIFIED PLAN CORRECTIONS			•				
G40-21	CERTIFIED PLAN CORRECTIONS			•				
G40-22	CERTIFIED PLAN CORRECTIONS			•				
G40-23	CERTIFIED PLAN CORRECTIONS			•				
G40-24	CERTIFIED PLAN CORRECTIONS			•				
G40-25	CERTIFIED PLAN CORRECTIONS					•		
G40-26	CERTIFIED PLAN CORRECTIONS					•		
G40-27	CERTIFIED PLAN CORRECTIONS					•		
G40-28	CERTIFIED PLAN CORRECTIONS						•	
02-CIVIL								
C00-01	GENERAL NOTES	•	•		•			
C00-02	GENERAL NOTES	•	•		•			
C00-03	ALIGNMENT, TIES, & BENCHMARKS	•	•		•			
C00-04	ALIGNMENT, TIES, & BENCHMARKS	•	•		•			
C00-06	TYPICAL SECTIONS	•	•		•			
C10-01	EXISTING CONDITIONS	•	•		•			
C10-02	EXISTING CONDITIONS	•	•		•			
C20-01	DEMOLITION PLAN	•	•		•			
C20-02	DEMOLITION PLAN	•	•		•			
C30-01	MAINTENANCE OF TRAFFIC - STAGING NOTES	•	•	•	•			
C30-02	MAINTENANCE OF TRAFFIC - DETOUR 1 - STAGE 1 & 2 WB LAKE ST.	•	•	•	•			
C30-03	MAINTENANCE OF TRAFFIC - DETOUR 2 - STAGE 1 EB LAKE ST.	•	•	•	•			
C30-04	MAINTENANCE OF TRAFFIC - DETOUR 3 - STAGE 2 EB LAKE ST.	•	•	•	•			
C40-01	MAINTENANCE OF TRAFFIC - STAGE 1	•	•	•	•			
C40-02	MAINTENANCE OF TRAFFIC - STAGE 2	•	•	•	•			
C40-03	MAINTENANCE OF TRAFFIC - STAGE 3A	•	•	•	•			
C40-04	MAINTENANCE OF TRAFFIC - STAGE 3B	•	•	•	•			
C40-05	MAINTENANCE OF TRAFFIC - STAGE 4A	•	•	•	•			
C40-06	MAINTENANCE OF TRAFFIC - STAGE 4B		•	•	•			
C40-07	MAINTENANCE OF TRAFFIC - STAGE 4C		•	•	•			
C41-01	STAGING DETAILS	•	•		•			
C41-02	STAGING DETAILS	•	•		•			
C41-03	STAGING DETAILS	•	•		•			
C50-01	PROPOSED IMPROVEMENTS	•	•		•			
C50-02	PROPOSED IMPROVEMENTS	•	•		•			
C50-03	PROPOSED PLAZA GRADING IMPROVEMENTS	•	•	•	•			
C50-04	PROPOSED GRADING ALLEY AND SEELEY AVENUE	•	•		•			
C50-05	PLAZA JOINTING DETAIL	•	•		•			
C51-01	CURB RAMP DETAILS	•	•		•			
C51-02	ADA DETAILS	•	•		•			
C51-03	ADA DETAILS	•	•		•			
C51-04	CIVIL DETAILS	•	•		•			
C60-01	EXISTING DRAINAGE CONDITIONS	•	•		•			
C60-02	PROPOSED DRAINAGE & UTILITY CONDITIONS	•	•	•	•			
C60-03	PROPOSED DRAINAGE & UTILITY CONDITIONS	•	•	•	•			
C60-04	PROPOSED UTILITY PROFILE	•	•	•	•			
C60-05	PROPOSED UTILITY SCHEDULE	•	•	•	•			
C61-01	DRAINAGE DETAILS	•	•		•			
C61-02	DRAINAGE DETAILS	•	•		•			
C61-03	DRAINAGE DETAILS	•	•		•			
C61-04	DRAINAGE DETAILS	•	•		•			
C61-05	DRAINAGE DETAILS	•	•		•			
C61-06	DRAINAGE DETAILS	•	•		•			
C70-01	EROSION AND SEDIMENT CONTROL PLAN	•	•	•	•			
C71-01	EROSION CONTROL DETAIL	•	•	•	•			
C80-01	PROPOSED SIGNAGE AND PAVEMENT MARKING	•	•		•			
C80-02	PROPOSED SIGNAGE AND PAVEMENT MARKING	•	•		•			
C80-03	PAVEMENT MARKING DETAILS	•	•		•			
C90-01	CROSS SECTIONS	•	•		•			
C90-02	CROSS SECTIONS	•	•		•			
C90-03	CROSS SECTIONS	•	•		•			
C90-04	CROSS SECTIONS	•	•		•			
C90-05	CROSS SECTIONS	•	•		•			
C90-06	CROSS SECTIONS	•	•		•			
C90-07	CROSS SECTIONS	•	•		•			
C90-08	CROSS SECTIONS	•	•		•			
CE00-01	ELECTRICAL GENERAL NOTES	•	•		•			
CE00-02	ELECTRICAL SYMBOLS	•	•		•			
CE10-01	UNDERGROUND CONDUIT FACILITIES	•	•	•	•			
CE10-02	STREET LIGHTING INSTALLATION	•	•		•			
CE10-03	TRAFFIC CONTROL SIGNALS	•	•	•	•			
CE11-01	ELECTRICAL DETAILS	•	•		•			
CE11-02	ELECTRICAL DETAILS	•	•		•			
CE11-03	ELECTRICAL DETAILS	•	•		•			
CE11-04	ELECTRICAL DETAILS	•	•		•			
CE11-05	ELECTRICAL DETAILS	•	•		•			
CE11-06	ELECTRICAL DETAILS	•	•		•			
CE11-07	ELECTRICAL DETAILS	•	•		•			

SHEET NUMBER	SHEET NAME	ISSUE FOR PERMIT	ISSUE FOR OUC EFP	BUILDING PERMIT CORRECTIONS 1	ISSUE FOR BID	BUILDING PERMIT CORRECTIONS 2	BUILDING PERMIT CORRECTIONS 3	ISSUE FOR BID - REVISION 1
CE11-08	ELECTRICAL DETAILS	•	•		•			
CE11-09	ELECTRICAL DETAILS	•	•		•			
CE11-10	ELECTRICAL DETAILS	•	•		•			
CE11-11	ELECTRICAL DETAILS	•	•		•			
CE11-12	ELECTRICAL DETAILS	•	•		•			
03-CIVIL TRACK								
CT-001	TRACK ACCESS PLATFORM, CENTER PLANKING, AND CLOSURE BOARD PLAN LOCATIONS	•			•			
CT-002	CENTER TRACK PLANKING AND STATION CLOSURE BOARD TYPICAL SECTION AND NOTES	•			•			
CT-003	TRACK LEVEL SIGNAGE PLAN	•			•			
CT-004	TRACK LEVEL SIGNAGE DETAILS	•			•			
CT-005	TRACK ACCESS STAIR PLANS, ELEVATION AND SECTION DETAILS	•			•			
CT-006	TRACK ACCESS STAIR DETAILS	•			•			
CT-007	TRACK ACCESS STAIR GATE DETAILS	•			•			
CT-008	CTA STANDARD CLEARANCE DIAGRAMS SHEET 1 OF 2	•			•			
CT-009	CTA STANDARD CLEARANCE DIAGRAMS SHEET 2 OF 2	•			•			
04-LANDSCAPE AND SURVEY								
L10-00	LANDSCAPE PLAN	•		•	•			
L20-00	LANDSCAPE DETAILS	•			•			
SV00-01	ALTA SURVEY	•	•		•			
TP00-01	TRACK PROFILE - EASTBOUND	•			•			
TP00-02	TRACK PROFILE - WESTBOUND	•			•			
05-STRUCTURAL								
S00-00	COVER SHEET	•	•		•			
S00-01	STRUCTURAL GENERAL NOTES	•	•	•	•			
S00-02	STRUCTURAL GENERAL NOTES	•	•		•			
S00-03	STRUCTURAL GENERAL NOTES				•			
S00-04	STRUCTURAL GENERAL NOTES	•	•	•	•			
S00-06a	DESIGN DATA - COLUMNS	•			•			
S00-06b	DESIGN DATA - BENT GIRDERS	•			•			
S11-10	STATION HOUSE - CAISSON PLAN	•	•	•	•			
S11-11	STATION HOUSE - CAP PLAN	•	•	•	•			
S11-12	STATION HOUSE - SLAB-ON-GRADE PLAN	•	•		•			
S11-13	STATION HOUSE - PLATFORM LEVEL PLAN	•		•	•			
S11-14	STATION HOUSE - MAIN ROOF PLAN	•		•	•			
S11-15	STATION HOUSE - HIGH ROOF PLAN	•		•	•			
S11-20	TOWER/BRIDGE - FOUNDATION PLAN	•	•		•			
S11-21	TOWER/BRIDGE - GRADE PLAN	•	•		•			
S11-22	TOWER/BRIDGE - LEVEL 1.5 FRAMING PLAN	•		•	•			
S11-23	TOWER/BRIDGE - LEVEL 2 FRAMING PLAN	•			•			
S11-24	TOWER/BRIDGE - BRIDGE FLOOR FRAMING PLAN	•		•	•	•		
S11-25	TOWER/BRIDGE - BRIDGE ROOF FRAMING PLAN	•		•	•			
S11-30	PLATFORM - EXISTING CONDITIONS PLAN	•			•			
S11-30A	PLATFORM - FOUNDATION PLAN - EAST	•			•			
S11-30B	PLATFORM - FOUNDATION PLAN - WEST	•			•			
S11-31A	PLATFORM - GRADE - EAST	•			•			
S11-31B	PLATFORM - GRADE - WEST	•			•			
S11-32A	PLATFORM - PLATFORM FRAMING - EAST	•		•	•			
S11-32B	PLATFORM - PLATFORM FRAMING - WEST	•		•	•			
S11-33A	PLATFORM - PRECAST PLAN - EAST	•			•			
S11-33B	PLATFORM - PRECAST PLAN - WEST	•			•			
S11-34A	PLATFORM - CANOPY - EAST	•		•	•			
S11-34B	PLATFORM - CANOPY - WEST	•			•			
S12-10	STATION HOUSE - MAT FOUNDATION PART PLAN	•	•	•	•			
S12-20	TOWER/BRIDGE - PART PLANS	•		•	•	•		
S12-21	TOWER/BRIDGE - PART PLANS	•		•	•			
S12-22	TOWER/BRIDGE - PART PLANS	•			•			
S12-30	PLATFORM - PART PLAN - TYPICAL BAY	•		•	•			
S12-31	PLATFORM - PART PLAN - STAIR PLATFORM	•			•			
S20-10	STATION HOUSE 3D OVERALL	•			•			
S20-20	TOWER/BRIDGE 3D OVERALL	•			•			
S20-21	TOWER/BRIDGE - ELEVATIONS	•		•	•			
S20-22	TOWER/BRIDGE - ELEVATIONS	•		•	•			
S20-23	TOWER/BRIDGE - ELEVATIONS	•			•	•		
S20-24	TOWER/BRIDGE - ELEVATIONS	•		•	•			
S20-25	TOWER/BRIDGE - ELEVATIONS	•		•	•			
S20-26	TOWER/BRIDGE - ELEVATIONS	•		•	•			
S20-27	TOWER/BRIDGE - ELEVATIONS	•		•	•			
S20-28	TOWER/BRIDGE - ELEVATIONS	•		•	•			
S21-30	PLATFORM 3D OVERALL	•			•			
S21-31	EXISTING TRACK STRUCTURE STEEL REPAIR NOTES	•			•			
S21-32	BENT 28 ELEVATION	•			•			
S21-33	BENT 27 ELEVATION	•			•			
S21-34	BENT 26 ELEVATION	•			•			
S21-35	BENT 25 ELEVATION	•			•			
S21-36	BENT 24 ELEVATION	•			•			
S21-37	BENT 23 ELEVATION	•			•			
S21-38	BENT 22 ELEVATION	•			•			
S21-39	FLOOR BEAM 02 ELEVATION	•		•	•		•	
S21-40	FLOOR BEAM 01 ELEVATION	•		•	•		•	
S21-41	BENT 19 ELEVATION	•		•	•			
S21-42	BENT 18 ELEVATION	•			•			
S30-00	TYPICAL CONCRETE REINFORCEMENT DETAILS	•	•		•			
S30-01	TYPICAL CAISSON AND GRADE BEAM DETAILS	•	•		•			
S30-02	TYPICAL CAISSON AND GRADE BEAM DETAILS	•	•		•			

SHEET NUMBER	SHEET NAME	ISSUE FOR PERMIT	ISSUE FOR OUC EFP	BUILDING PERMIT CORRECTIONS 1	ISSUE FOR BID	BUILDING PERMIT CORRECTIONS 2	BUILDING PERMIT CORRECTIONS 3	ISSUE FOR BID - REVISION 1
S30-03	TYPICAL CAISSON AND GRADE BEAM DETAILS	•	•		•			
S30-04	TYPICAL MICROPILE AND PILE CAP DETAILS	•	•	•	•			
S30-05	TYPICAL CONCRETE PIER AND FOOTING DETAILS	•	•		•			
S30-06	TYPICAL SLAB-ON-GRADE DETAILS	•	•		•			
S30-07	TYPICAL CONCRETE WALL DETAILS	•	•		•			
S30-08	TYPICAL CONCRETE DETAILS	•			•			
S30-10	STATION HOUSE FOUNDATION SECTIONS	•	•		•			
S30-11	STATION HOUSE FOUNDATION SECTIONS	•	•	•	•			
S30-12	STATION HOUSE FOUNDATION SECTIONS	•	•	•	•			
S30-13	STATION HOUSE CONCRETE DETAILS	•	•	•	•			
S30-14	STATION HOUSE CONCRETE DETAILS	•	•		•			
S30-15	STATION HOUSE CONCRETE DETAILS	•	•	•	•			
S30-16	STATION HOUSE CONCRETE DETAILS	•	•		•			
S30-17	STATION HOUSE CONCRETE SHEARWALL DETAILS	•	•	•	•			
S30-19	BUS CANOPY SECTIONS	•	•	•	•			
S30-20	BUS CANOPY SECTIONS				•			
S30-30	SITE RETAINING WALL PLAN	•			•			
S30-31	SITE RETAINING WALL SECTIONS & DETAILS	•		•	•			
S40-10	STATION HOUSE COLUMN SCHEDULE	•		•	•			
S40-20	TOWER/BRIDGE COLUMN SCHEDULE	•		•	•			
S40-30	PLATFORM COLUMN DETAILS	•		•	•			
S41-00	STEEL TYPICAL DETAILS	•		•	•	•		
S41-10	STATION HOUSE SECTIONS AND DETAILS	•		•	•			
S41-11	STATION HOUSE SECTIONS AND DETAILS	•		•	•			
S41-12	STATION HOUSE SECTIONS AND DETAILS	•			•			
S41-13	STATION HOUSE SECTIONS AND DETAILS	•			•			
S41-14	STATION HOUSE SECTIONS AND DETAILS	•		•	•			
S41-15	STATION HOUSE SECTIONS AND DETAILS	•			•			
S41-20	TOWER/BRIDGE - DETAILS	•		•	•	•		
S41-21	TOWER/BRIDGE - DETAILS	•		•	•			
S41-22	TOWER/BRIDGE - DETAILS	•		•	•			
S41-30	PLATFORM - EXISTING BENT MODIFICATIONS	•			•			
S41-31	PLATFORM - EXISTING BENT MODIFICATIONS	•		•	•			
S41-32	PLATFORM - SECTIONS	•			•			
S41-33	PLATFORM - PLAN DETAILS	•		•	•			
S41-34	PLATFORM - SECTIONS AND DETAILS	•		•	•			
S41-35	PLATFORM - SECTIONS AND DETAILS	•			•			
S41-36	PLATFORM - SECTIONS AND DETAILS	•			•			
S41-40	PLATFORM - PRECAST SECTIONS	•			•			
S41-41	PLATFORM - PRECAST CONNECTION PLAN	•			•			
S41-42	PLATFORM - PRECAST DETAILS	•			•			
S41-43	PLATFORM - PRECAST DETAILS	•			•			
S42-10	STATION HOUSE CONNECTION DETAILS	•			•			
S42-20	TOWER STEEL CONNECTION DETAILS	•			•			
S42-21	TOWER STEEL CONNECTION DETAILS	•			•			
S42-22	TOWER STEEL CONNECTION DETAILS	•		•	•			
S42-23	TOWER LEVEL 3 CONNECTION DETAILS	•			•			
S42-24	TOWER STEEL CONNECTION DETAILS	•		•	•			
S42-25	TOWER STEEL CONNECTION DETAILS	•		•	•			
S42-26	BRIDGE STEEL CONNECTION DETAILS	•		•	•			
S42-27	BRIDGE STEEL CONNECTION DETAILS	•			•			
S42-28	BRIDGE STEEL CONNECTION DETAILS	•			•			
S42-29	BRIDGE STEEL CONNECTION DETAILS	•		•	•			
S42-30	PLATFORM AND EXISTING STEEL CONNECTION DETAILS	•			•	•		
S42-31	PLATFORM AND EXISTING STEEL CONNECTION DETAILS	•			•			
S43-00	AESS DRAWING	•			•			
S43-01	AESS DRAWING	•			•			
S43-02	AESS DRAWING	•			•			
S50-00	NAIL LAMINATED TIMBER DETAILS	•			•			
S50-01	NAIL LAMINATED TIMBER DETAILS	•			•			
S50-02	NAIL LAMINATED TIMBER DETAILS	•			•			
S60-30	PLATFORM - CANOPY - TYPICAL SECTION	•			•			
S60-31	PLATFORM - CANOPY - STAIR SECTION	•			•			
S60-32	PLATFORM - CANOPY - PURLIN DETAILS	•			•			
S60-33	PLATFORM - CANOPY - GUTTER DETAILS	•			•			
S60-34	PLATFORM - CANOPY - MISC DETAILS	•			•			
S70-20	TOWER/BRIDGE - STAIR SECTION AND DETAILS	•			•			
S70-21	TOWER/BRIDGE - STAIR DETAILS				•			
S70-30	PLATFORM - STAIR PART PLAN	•			•			
S70-31	PLATFORM - STAIR SECTIONS	•			•			
S70-32	PLATFORM - STAIR SECTIONS	•			•			
S70-33	PLATFORM - STAIR DETAILS	•			•			
S70-34	PLATFORM - STAIR DETAILS	•			•			
S80-30	GUARDRAIL CONNECTION KEY PLAN	•			•			
S80-31	GUARDRAIL ELEVATIONS	•			•			
S80-32	GUARDRAIL CONNECTION SECTIONS AND DETAILS	•			•			
S80-33	GUARDRAIL CONNECTION SECTIONS AND DETAILS	•			•			
S81-30	WINDSCREEN SECTION AND DETAILS	•			•			
S81-31	ENTRY BARRIER SECTION AND DETAILS	•			•			
SD00-00	STRUCTURAL DEMOLITION AND SUGGESTED SHORING NOTES	•			•		•	
SD11-20	SUGGESTED BRIDGE ERECTION SEQUENCE	•			•		•	
SD11-30A	TRACK DEMOLITION AND SHORING PLAN - EAST	•			•		•	
SD11-30B	TRACK DEMOLITION AND SHORING PLAN - WEST	•			•		•	
SD41-00	SHORING TOWER SECTIONS	•			•		•	
SD41-01	SHORING TOWER SECTIONS	•			•		•	
SD42-00	SUGGESTED CONSTRUCTION SEQUENCE	•			•		•	
SD42-01	SUGGESTED CONSTRUCTION SEQUENCE	•			•		•	
SD42-02	SUGGESTED CONSTRUCTION SEQUENCE	•			•		•	
SD42-03	SUGGESTED CONSTRUCTION SEQUENCE	•			•		•	
SD42-04	SUGGESTED CONSTRUCTION SEQUENCE	•			•		•	

SHEET NUMBER	SHEET NAME	ISSUE FOR PERMIT	ISSUE FOR OUC EFP	BUILDING PERMIT CORRECTIONS 1	ISSUE FOR BID	BUILDING PERMIT CORRECTIONS 2	BUILDING PERMIT CORRECTIONS 3	ISSUE FOR BID - REVISION 1
SD42-05	SUGGESTED CONSTRUCTION SEQUENCE	•			•		•	
TPS1.00	TRACTION POWER - PLAN				•			
TPS1.01	TRACTION POWER - STANDARD DETAILS				•			
TPS1.02	TRACTION POWER - STANDARD DETAILS				•			
TPS1.04	TRACTION POWER - STANDARD DETAILS				•			
TPS1.05	TRACTION POWER - STANDARD DETAILS				•			
TPS1.06	TRACTION POWER - STANDARD DETAILS				•			
TPS1.11	TRACTION POWER - CUSTOM DETAILS				•			
TPS1.12	TRACTION POWER - CUSTOM DETAILS				•			
TPS1.13	TRACTION POWER - CUSTOM DETAILS				•			
TPS1.14	TRACTION POWER - CUSTOM DETAILS				•			
TPS2.01	TRACTION POWER - SECTION AT GREENLINE BENT 177				•			
06-ARCHITECTURAL								
A00-01	ABBREVIATIONS, SYMBOLS, AND GENERAL NOTES	•			•			
A10-01	OVERALL LEVEL 01 PLAN	•		•	•			
A10-02	OVERALL LEVEL 02 - PLATFORM PLAN	•		•	•			
A10-03	OVERALL LEVEL 03 - BRIDGE PLAN	•		•	•			
A10-04	OVERALL ROOF PLAN	•		•	•			
A11-00	ARCHITECTURAL SITE PLAN	•		•	•			
A11-01	STATION ENLARGED LEVEL 01 PLAN	•		•	•			
A11-02	STATION ENLARGED LEVEL 02 PLAN	•		•	•			
A11-03	STATION ENLARGED ROOF PLAN	•		•	•			•
A11-12	TOWER/BRIDGE ENLARGED LEVEL 02 PLAN	•		•	•			
A11-13	TOWER/BRIDGE ENLARGED LEVEL 03 PLAN	•			•			
A11-14	TOWER/BRIDGE ENLARGED ROOF PLAN	•			•			
A11-22A	PLATFORM EAST ENLARGED LEVEL 02 PLAN	•		•	•			
A11-22B	PLATFORM WEST ENLARGED LEVEL 02 PLAN	•			•			
A11-23A	PLATFORM EAST ENLARGED ROOF PLAN	•			•			
A11-23B	PLATFORM WEST ENLARGED ROOF PLAN	•			•			
A12-01	STATION LEVEL 01 REFLECTED CEILING PLAN	•		•	•			•
A12-02	STATION LEVEL 02 REFLECTED CEILING PLAN	•		•	•			
A12-12	TOWER/BRIDGE LEVELS 01 & 02 REFLECTED CEILING PLAN	•			•			
A12-13	TOWER/BRIDGE LEVEL 03 REFLECTED CEILING PLAN	•			•			
A12-22A	PLATFORM EAST LEVEL 02 REFLECTED CEILING PLAN	•		•	•			
A12-22B	PLATFORM WEST LEVEL 02 REFLECTED CEILING PLAN	•		•	•			
A20-01	EXTERIOR ELEVATIONS - NORTH	•		•	•			•
A20-02	EXTERIOR ELEVATIONS - EAST	•		•	•			
A20-03	EXTERIOR ELEVATIONS - SOUTH	•			•			
A20-04	EXTERIOR ELEVATIONS - WEST	•		•	•			
A20-05A	EXTERIOR ELEVATIONS - OUTBOUND PLATFORM NORTH	•		•	•			
A20-05B	EXTERIOR ELEVATIONS - OUTBOUND PLATFORM SOUTH	•		•	•			
A20-06A	EXTERIOR ELEVATIONS - INBOUND PLATFORM SOUTH	•		•	•			
A20-06B	EXTERIOR ELEVATIONS - INBOUND PLATFORM NORTH	•		•	•			
A21-01	OVERALL SECTIONS	•			•			
A21-02	OVERALL SECTIONS	•			•			
A30-00	ARCHITECTURAL ASSEMBLIES AND DETAILS - GRANITE	•			•			
A30-01	ARCHITECTURAL ASSEMBLIES AND DETAILS - PATTERNS	•			•			
A30-02	ARCHITECTURAL ASSEMBLIES AND DETAILS - ACON	•			•			
A30-03	ARCHITECTURAL ASSEMBLIES AND DETAILS - ACON	•			•			
A31-01	EXTERIOR WALL SECTIONS - STATION NORTH WALL	•		•	•			
A31-02	EXTERIOR WALL SECTIONS - STATION EAST WALL	•			•			
A31-03	EXTERIOR WALL SECTIONS - STATION SOUTH WALL	•			•			
A31-04	EXTERIOR WALL SECTIONS - STATION WEST WALL	•			•			
A31-05	ENLARGED EXTERIOR WALL ELEVATIONS AND SECTIONS	•		•	•			
A31-06	ENLARGED EXTERIOR WALL ELEVATIONS AND SECTIONS	•			•			
A31-07	STATION HIGH ROOF DETAILS				•			
A31-10	EXTERIOR WALL SECTIONS - NORTH TOWER	•		•	•			
A31-11	ENLARGED EXTERIOR WALL ELEVATIONS AND SECTIONS	•			•			
A31-12	ENLARGED EXTERIOR WALL ELEVATIONS AND SECTIONS	•			•			
A31-13	NORTH TOWER ISOMETRICS (FOR REFERENCE ONLY)	•		•	•			
A31-14	ENLARGED LEVEL 1.5 ROOF PLAN AND DETAILS	•		•	•			
A31-15	ENLARGED BRIDGE SYSTEMS	•			•			
A31-16	BRIDGE DETAILS	•			•			
A31-17	BRIDGE DETAILS				•			
A31-20	ENLARGED PLATFORM SYSTEMS	•			•			
A31-21	ENLARGED PLATFORM SYSTEMS	•			•			
A31-22	PLATFORM DETAILS	•			•			
A31-23	PLATFORM FURNITURE DETAILS - WINDBREAK	•			•			
A31-24	PLATFORM FURNITURE DETAILS - BENCH	•			•			
A31-25	PLATFORM TACTILE PANEL DETAILS	•			•			
A31-26	PLATFORM FURNITURE DETAILS - GAP FILLER ENCLOSURE	•			•			
A31-27	PLATFORM FURNITURE DETAILS - GAP FILLER DEVICE	•			•			
A31-28	PLATFORM FURNITURE DETAILS - SANDBOX	•			•			
A31-30	ENLARGED BUS STOP SYSTEMS	•			•			
A31-31	BUS STOP DETAILS				•			
A31-33	STATION ENTRY DETAILS	•			•			
A31-34	NORTH TOWER CANOPY	•			•			
A32-03	EXTERIOR WALL SECTION DETAILS - STATION				•			
A32-06	EXTERIOR WALL DETAILS - TYPICAL STATION	•			•			
A32-11	EXTERIOR WALL SECTION DETAILS - STATION	•			•			•
A32-12	EXTERIOR WALL SECTION DETAILS - STATION	•			•			•
A32-13	EXTERIOR WALL SECTION DETAILS - STATION	•			•			•
A32-13B	EXTERIOR WALL SECTION DETAILS - STATION				•			•
A32-14	EXTERIOR WALL SECTION DETAILS - STATION	•			•			•
A32-15	EXTERIOR WALL DETAILS - STATION				•			
A32-16	EXTERIOR WALL PLAN DETAILS - STATION				•			
A32-20	EXTERIOR WALL SECTION DETAILS - NORTH TOWER	•			•			
A32-21	EXTERIOR WALL SECTION DETAILS - NORTH TOWER	•			•			
A32-22	EXTERIOR WALL SECTION DETAILS - NORTH TOWER				•			

SHEET NUMBER	SHEET NAME	ISSUE FOR PERMIT	ISSUE FOR OUC EFP	BUILDING PERMIT CORRECTIONS 1	ISSUE FOR BID	BUILDING PERMIT CORRECTIONS 2	BUILDING PERMIT CORRECTIONS 3	ISSUE FOR BID - REVISION 1
A41-01	ENLARGED STAIR PLANS & SECTIONS - STATION	•		•	•			
A41-02	ENLARGED STAIR PLANS & SECTIONS - STATION	•		•	•			
A41-10	ENLARGED STAIR PLANS & SECTIONS - NORTH TOWER	•		•	•			
A41-20	ENLARGED STAIR PLANS & SECTIONS - PLATFORM	•		•	•			
A41-53	STAIR DETAILS - PLATFORM				•			
A42-01	ENLARGED ELEVATOR PLANS	•		•	•			
A42-02	ENLARGED ELEVATOR SECTIONS - SOUTH	•			•			
A42-03	ENLARGED ELEVATOR SECTIONS - NORTH	•		•	•			
A42-04	ENLARGED ELEVATOR HALL ELEVATIONS	•			•			
A42-05	ENLARGED ELEVATOR PLANS & ELEVATIONS	•			•			
A42-06	ENLARGED ELEVATOR PLANS & ELEVATIONS	•			•			
A42-10	ENLARGED ESCALATOR PLANS & SECTIONS	•			•			
A43-01	ENLARGED INTERIOR PLANS & ELEVATIONS - CAK & FARE ARRAY	•			•	•		
A43-02	ENLARGED INTERIOR PLANS & ELEVATIONS - CAK & FARE ARRAY	•			•			
A43-03	CAK DETAILS				•			
A43-04	ENLARGED INTERIOR PLANS & ELEVATIONS - LEVEL 01	•		•	•			
A43-05	ENLARGED INTERIOR PLANS & ELEVATIONS - LEVEL 01 TOILET ROOM	•			•			
A43-06	ENLARGED INTERIOR ELEVATIONS - LEVEL 02	•		•	•			
A43-07	ENLARGED INTERIOR PLANS & ELEVATIONS - SUPERVISOR BOOTH	•			•	•		
A43-08	SUPERVISOR BOOTH DETAILS				•			
A43-09	WATERPROOFING DIAGRAMS	•			•			
A62-01	DOOR SCHEDULE & TYPES	•		•	•			
A62-02	DOOR DETAILS				•			
A62-50	PARTITION TYPES & FINISH SCHEDULE	•		•	•			
A90-01	OVERALL ISOMETRIC (FOR REFERENCE ONLY)	•	•		•			
A90-02	OVERALL ISOMETRIC (FOR REFERENCE ONLY)	•	•		•			
AG11-01	STATION ENLARGED LEVEL 01 SIGNAGE PLAN	•			•			
AG11-02	STATION ENLARGED LEVEL 02 SIGNAGE PLAN	•			•			
AG11-13	TOWER/BRIDGE ENLARGED LEVEL 03 SIGNAGE PLANS	•			•			
AG11-22A	PLATFORM - EAST ENLARGED SIGN LOCATION PLAN	•			•			
AG11-22B	PLATFORM - WEST ENLARGED SIGN LOCATION PLAN	•			•			
AG32-00	SIGNAGE DRILLING PATTERNS AND CUSTOM SIGNAGE	•			•			
AG43-01	TRANSIT INFORMATION PANEL ELEVATION - BUS STATION	•			•			
AG43-02	TRANSIT INFORMATION PANEL ELEVATION - PRE-FARE CONTROL	•			•			
AG43-03	TURNSTILE SIGNAGE ELEVATION - LEVEL 01	•			•			
AG43-04	BRAILLE SIGNAGE ELEVATION - LEVEL 01	•			•			
AG43-05	P-47 DIRECTIONAL ELEVATION - LEVEL 01	•			•			
AG43-06	P-50 DIRECTIONAL SIGNAGE ELEVATION - LEVEL 02	•			•			
AG43-07	DIRECTIONAL SIGNAGE ELEVATION - LEVEL 02 STAIRS	•			•			
AG43-08	P-53 DIRECTIONAL SIGNAGE ELEVATION - BRIDGE	•			•			
AG43-09	TRANSIT INFORMATIONAL PANEL ELEVATION - PLATFORM	•			•			
AG43-10	PLATFORM STAIR AND TURNSTILE ELEVATIONS	•			•			
AG43-11	PLATFORM SIGNAGE ELEVATION	•			•			
AG43-12	STREET LEVEL E-34/35 SIGN DETAILS	•			•			
AG60-01	MESSAGE SCHEDULE LEVEL 01	•			•			
AG60-02	MESSAGE SCHEDULE LEVEL 01	•			•			
AG60-03	MESSAGE SCHEDULE LEVEL 01	•			•			
AG60-04	MESSAGE SCHEDULE LEVEL 01	•			•			
AG60-05	MESSAGE SCHEDULE LEVEL 02	•			•			
AG60-06	MESSAGE SCHEDULE LEVEL 02	•			•			
AG60-07	MESSAGE SCHEDULE LEVEL 03	•			•			
AG60-08	MESSAGE SCHEDULE LEVEL 03	•			•			
AG60-09	MESSAGE SCHEDULE PLATFORM EAST	•			•			
AG60-10	MESSAGE SCHEDULE PLATFORM EAST	•			•			
AG60-11	MESSAGE SCHEDULE PLATFORM EAST	•			•			
AG60-12	MESSAGE SCHEDULE PLATFORM EAST	•			•			
AG60-13	MESSAGE SCHEDULE PLATFORM EAST	•			•			
AG60-14	MESSAGE SCHEDULE PLATFORM EAST	•			•			
AG60-15	MESSAGE SCHEDULE PLATFORM EAST	•			•			
AG60-16	MESSAGE SCHEDULE PLATFORM WEST	•			•			
AG60-17	MESSAGE SCHEDULE PLATFORM WEST	•			•			
AG60-18	MESSAGE SCHEDULE PLATFORM WEST	•			•			
AG60-19	MESSAGE SCHEDULE PLATFORM WEST	•			•			
AG60-20	MESSAGE SCHEDULE PLATFORM WEST	•			•			
TPA10-00	TRACTION POWER PARCEL PLAN				•			
TPA10-01	PARCEL A&B DESCRIPTION				•			
TPA10-02	PARCEL A DESCRIPTION				•			
TPA10-03	PARCEL B DESCRIPTION				•			

		NO.	DATE	REVISIONS	DES.	DRW.	CHK.	DCCO	CDOT
DESIGN BY:									
DRAWN BY:									
CHECKED BY:									
APPROVED BY:			**09/29/20**	**ISSUE FOR BID - REVISION 1**	BS	AS	JH		
CDOT/APPROVED BY:									

PERKINS+WILL
The Wrigley Building
410 North Michigan Ave.
Suite 1600
Chicago, IL 60611
t 312.755.0770
f 312.755.0775
www.perkinswill.com

CDOT
CHICAGO DEPARTMENT OF TRANSPORTATION
DIVISION OF ENGINEERING

154 N DAMEN AVE - DAMEN GREEN LINE STATION

DRAWING INDEX - PART 1

CDOT PROJECT D-7-135

DATE: 09/29/20

SPEC. NO.

DRAWING NO. **G00-01**

REVISION NO.

SHEET NUMBER	SHEET NAME	ISSUE FOR PERMIT	ISSUE FOR OUC EFP	BUILDING PERMIT CORRECTIONS 1	ISSUE FOR BID	BUILDING PERMIT CORRECTIONS 2	BUILDING PERMIT CORRECTIONS 3	ISSUE FOR BID - REVISION 1
07-ELECTRICAL								
E01-01	ELECTRICAL SYMBOL LIST	•			•			
E01-02	ELECTRICAL GENERAL NOTES AND ABBREVIATIONS	•		•	•			
E01-03	ELECTRICAL CODE MATRIX	•			•			
E10-00	UNDERGRADE CONDUIT PLAN	•			•			
E10-01	OVERALL ELECTRICAL STATION PLAN	•			•			
E10-02	OVERALL ELECTRICAL PLATFORM PLAN	•			•			
E10-03	OVERALL ELECTRICAL BRIDGE PLAN	•			•			
E10-10	LEVEL 01 PLAZA LIGHTING PLAN	•			•			
E10-11	LEVEL 01 STATION HOUSE LIGHTING PLAN	•		•	•			
E10-12	LEVEL 02 LIGHTING PLAN	•		•	•			
E10-13	LEVEL 02 PLATFORM LIGHTING PLAN - AREA A	•		•	•			
E10-14	LEVEL 02 PLATFORM LIGHTING PLAN - AREA B	•		•	•			
E10-15	LEVEL 02 PLATFORM LIGHTING PLAN - AREA C	•		•	•			
E10-16	LEVEL 03 BRIDGE LIGHTING PLAN	•		•	•			
E10-20	LEVEL 01 STATION HOUSE POWER PLAN	•		•	•			
E10-21	LEVEL 02 AND LEVEL 05 POWER PLANS	•		•	•	•		
E10-22	LEVEL 02 PLATFORM POWER PLAN - AREA A	•		•	•			
E10-23	LEVEL 02 PLATFORM POWER PLAN - AREA B	•		•	•			
E10-24	LEVEL 02 PLATFORM POWER PLAN - AREA C	•			•			
E10-25	LEVEL 03 - BRIDGE POWER PLAN	•			•			
E10-26	LEVEL 05 ROOF POWER PLAN	•			•			
E10-30	STATION HOUSE FIRE ALARM PLAN	•			•			
E10-31	LEVEL 02 FIRE ALARM PLAN	•			•			
E10-32	LEVEL 03 BRIDGE FIRE ALARM PLAN	•			•			
E10-40	LEVEL 01 STATION HOUSE MONITORING AND ALARM PLAN	•			•			
E10-41	LEVEL 02 MONITORING AND ALARM PLAN	•			•			
E10-42	LEVEL 03 AND LEVEL 05 MONITORING AND ALARM PLAN	•			•			
E11-01	ENLARGED FLOOR PLAN - ELECTRICAL /UPS/COMMUNICATION ROOMS	•		•	•			
E11-10	ENLARGED STATION HOUSE ROOM LIGHTING PLAN	•			•			
E11-11	ENLARGED CAK PLANS	•			•			
E11-12	ENLARGED LEVEL 02 PLATFORM EXIT STAIR LIGHTING PLANS	•			•			
E11-13	ENLARGED LEVEL 01 PLATFORM EXIT STAIR LIGHTING PLANS	•			•			
E11-14	ENLARGED ELEVATOR MACHINE ROOM PLANS	•			•			
E11-15	ENLARGED LEVEL 1.5 NORTH PLANS	•			•			
E11-16	ENLARGED LEVEL 1.5 NORTH POWER PLANS	•		•	•	•		
E11-30	ENLARGED STATION HOUSE ROOM FIRE ALARM PLAN	•			•			
E20-01	ELECTRICAL ROOM ELEVATIONS	•			•			
E20-02	ELECTRICAL SECTIONS - UNDERGROUND SERVICE	•			•			
E20-03	SECTIONS	•			•			
E20-04	SECTIONS - LIGHTING	•			•			
E20-05	PLATFORM TO STREET LIGHTING SECTION TYPICAL	•			•			
E20-06	NORTH STAIR LIGHTING SECTION	•			•			
E50-01	DETAILS - ITC CABINET	•			•			
E50-02	DETAILS - HEAT TRACE PANEL	•			•			
E50-03	DETAILS - RELAY CONTROL PANEL	•			•			
E50-04	DETAILS - CONDUIT	•			•			
E50-05	DETAILS - MAIN DISTRIBUTION SWITCHBOARD ELEVATIONS	•			•			
E50-06	DETAILS - CUSTOMER ASSISTANT KIOSK ALARM PANEL	•			•			
E50-07	DETAILS - GROUNDING	•			•			
E50-08	DETAILS - GENERATOR TAP BOX	•			•			
E50-09	ACCESS CONTROL DOOR DETAILS	•			•			
E50-10	DETAILS - HEAT TRACE POWER CONNECTIONS	•			•			
E50-11	DETAILS - COMED STANDARDS	•			•			
E50-12	DETAILS - COMED STANDARDS	•			•			
E50-13	DETAILS- EXTERIOR LIGHTING	•			•			
E60-01	ELECTRICAL SINGLE LINE DIAGRAM	•			•			
E60-02	CABLE AND CONDUIT SCHEDULE	•			•			
E60-03	CITY LOAD CALCULATIONS	•			•			
E60-04	ELECTRICAL EQUIPMENT SCHEDULE	•		•	•	•		
E60-05	LIGHTING FIXTURE SCHEDULE	•			•			
E60-06	DIAGRAMS - MONITOR AND ALARM TERMINAL	•			•			
E60-07	DIAGRAMS - ITC WIRING DIAGRAM	•			•			
E60-08	DIAGRAMS - FIRE ALARM RISER	•			•			
E60-09	DIAGRAMS - CONTROL WIRING SCHEMATICS	•			•			
E60-10	PANEL SCHEDULES	•			•			
E60-11	PANEL SCHEDULES	•		•	•			
E60-12	PANEL SCHEDULES	•			•			
E60-13	PANEL SCHEDULES	•		•	•			
E60-14	PANEL SCHEDULES	•		•	•			
E60-15	DIAGRAMS - ELEVATOR CONTROLS	•		•	•	•		
E60-16	DIAGRAMS - ESCALATOR CONTROLS	•			•			
E60-17	DIAGRAMS - LIGHTING CONTROL	•			•			
E60-18	DIAGRAMS - LIGHTING DIMMING CONTROL	•			•			
E60-19	DIAGRAMS - FARE CONTROL EQUIPMENT BLOCK	•			•			
E60-20	DIAGRAMS - RELAY CONTROL PANEL WIRING	•			•			
E60-22	DIAGRAMS - HEAT TRACE PANEL WIRING PART 1	•			•			
E60-23	DIAGRAMS - HEAT TRACE PANEL WIRING PART 2	•			•			
E60-24	DIAGRAMS - HEAT TRACE PANEL WIRING PART 3	•			•			
E60-25	DIAGRAMS - CONTROL DIAGRAMS	•			•			
E60-26	DIAGRAM - SYSTEM GROUND DIAGRAM	•			•			
E90-00	EMERGENCY/EXIT LIGHTING FIXTURE SCHEDULE AND SYMBOL LIST	•			•			
E90-01	EM-1 AND EM-2 SINGLE LINE DIAGRAMS	•			•			
E90-11	STATION HOUSE EMERGENCY LIGHTING PLAN	•			•			
E90-12	LEVEL 02 EMERGENCY LIGHTING PLANS	•		•	•			
E90-13	LEVEL 02 PLATFORM EMERGENCY LIGHTING PLAN - AREA A	•			•			
E90-14	LEVEL 02 PLATFORM EMERGENCY LIGHTING PLAN - AREA B	•			•			
E90-15	LEVEL 02 PLATFORM EMERGENCY LIGHTING PLAN - AREA C	•			•			
E90-16	LEVEL 03 BRIDGE EMERGENCY LIGHTING PLAN	•		•	•			

SHEET NUMBER	SHEET NAME	ISSUE FOR PERMIT	ISSUE FOR OUC EFP	BUILDING PERMIT CORRECTIONS 1	ISSUE FOR BID	BUILDING PERMIT CORRECTIONS 2	BUILDING PERMIT CORRECTIONS 3	ISSUE FOR BID - REVISION 1
EC10-00	OVERALL COMMUNICATION CABLE PLAN	•			•			
EC10-01	PLATFORM LEVEL BACKBONE COMMUNICATION PLAN	•			•			
EC50-01	DETAILS - COMMUNICATION	•			•			
EC50-02	DETAILS - COMMUNICATION	•			•			
EC50-03	DETAILS - MESSENGER BRACKETS	•			•			
EC50-04	DETIALS - MESSENGER BRACKETS	•			•			
EC50-05	MESSENGER INSTALLATION DETAILS (1 OF 2)	•			•			
EC50-06	MESSENGER INSTALLATION DETAILS (2 OF 2	•			•			
TPE01-01	WASHINGTON BLVD SUBSTATION TRACTION POWER GENERAL NOTES, SYMBOLS, ABBREVIATIONS AND DEVICE LIST	•			•			
TPE10-01	WASHINGTON BLVD SUBSTATION TRACTION POWER OVERALL SITE PLAN	•			•			
TPE10-02	WASHINGTON BLVD SUBSTATION TRACTION POWER ENLARGED PLAN	•			•			
TPE10-03	WASHINGTON BLVD SUBSTATION TRACTION POWER ENLARGED PLAN	•			•			
TPE10-04	WASHINGTON BLVD SUBSTATION RAIL FEEDER DIAGRAM LAKE STREET LINE CABLE REMOVAL	•			•			
TPE10-05	WASHINGTON BLVD SUBSTATION EXISTING RAIL FEEDER DIAGRAM BENT 2232-34' TO BENT 2300-12'	•			•			
TPE10-06	WASHINGTON BLVD SUBSTATION OPERATING FLOOR GENERAL ARRANGEMENT LAYOUT	•			•			
TPE10-07	WASHINGTON BLVD SUBSTATION FIRST FLOOR CABLE TRAY LAYOUT	•			•			
TPE10-08	WASHINGTON BLVD SUBSTATION CABLE VAULT CABLE LAYOUT	•			•			
TPE40-01	WASHINGTON BLVD SUBSTATION RAIL FEEDER DIAGRAM	•			•			
TPE40-02	WASHINGTON BLVD SUBSTATION ENLARGED RAIL FEEDER DIAGRAM	•			•			
TPE50-00	STP-004 SYMBOLS, ABBREVIATIONS AND GENERAL NOTES	•			•			
TPE50-01	STP-100 FIBERGLASS CONTACT RAIL INSULATOR CHAIR SHEET 1 OF 2	•			•			
TPE50-02	STP-101 FIBERGLASS CONTACT RAIL INSULATOR CHAIR SHEET 2 OF 2	•			•			
TPE50-03	STP-105 CONTACT RAIL INSULATOR CHAIR INSTALLATION BALLASTED & ELEVATED	•			•			
TPE50-04	STP-106 85 LB/Y AND 74 LB/Y BASE CONTACT RAIL DETAILS	•			•			
TPE50-05	STP-107 85 LB/Y AND 74 LB/Y BASE CONTACT RAIL FISH PLATE ASSY DETAILS	•			•			
TPE50-06	STP-108 85 LB/Y AND 74 LB/Y BASE CONTACT RAIL INCLINE DETAILS	•			•			
TPE50-07	STP-109 85 LB/Y AND 74 LB/Y BASE CONTACT RAIL INCLINE DETAILS	•			•			
TPE50-08	STP-110 85 LB/Y AND 74 LB/Y BASE CONTACT RAIL BONDING	•			•			
TPE50-09	STP-111 85lb/y ALUMINUM CLAD CONTACT RAIL DETAILS SHEET 1 OF 2	•			•			
TPE50-10	STP-112 85lb/y ALUMINUM CLAD CONTACT RAIL DETAILS SHEET 2 OF 2	•			•			
TPE50-11	STP-117 CONTACT RAIL TAPS ASSEMBLY AND DETAILS SHEET 1 OF 2	•			•			
TPE50-12	STP-118 CONTACT RAIL TAPS ASSEMBLY AND DETAILS SHEET 2 OF 2	•			•			
TPE50-13	STP-200 CABLE DETAILS (1 OF 2)	•			•			
TPE50-14	STP-201 CABLE DETAILS (2 OF 2)	•			•			
TPE50-15	STP-202 ELEVATED TRACK CABLE DEAD AND BRACKET DETAILS	•			•			
TPE50-16	STP-203 ELEVATED TRACK POSITIVE CABLE DEAD END DETAILS	•			•			
TPE50-17	STP-207 TYPICAL AERIAL CABLE SUPPORT DETAILS	•			•			
TPE50-18	STP-208 TYPICAL AERIAL CABLE SUPPORT DETAILS	•			•			
TPE50-19	STP-209 ELEVATED TRACK CROSS ARM TIMBER AND SPOOL INSULATOR DETAILS	•			•			
TPE50-20	STP-210 ELEVATED TRACK CROSS ARM TIMBER AND SPOOL INSULATOR DETAILS	•			•			
TPE50-21	STP-300 KNIFE SWITCH 1200 AMP 800 V DC SPST	•			•			
TPE50-22	STP-304 FIBERGLASS SWITCH ENCLOSURE WITH FLANGE LIP	•			•			
TPE50-23	STP-305 FIBERGLASS SWITCH ENCLOSURE WITH FLANGE LIP	•			•			
TPE50-24	STP-308 ENCLOSURE DESIGNATIONS	•			•			
TPE50-25	STP-309 KNIFE SWITCH MOUNTING AND INSTALLATION DETAILS	•			•			
TPE50-26	STP-404 STRUCTURE TO STRUCTURE BONDING DETAILS	•			•			
TPE50-27	STP-405 RAIL AND CABLE BONDING TO STRUCTURE	•			•			
TPE50-28	STP-802 ELEVATED TRACK SWITCH PLATFORM FOR TWO ENCLOSURES	•			•			
TPE50-29	STP-803 ELEVATED TRACK SWITCH PLATFORM FOR TWO ENCLOSURES	•			•			
TPE50-30	STP-810 ELEVATED TRACK CONTACT RAIL TRANSPOSITION 12' INCLINES	•			•			
TPE50-31	STP-818 ELEVATED TRACK CONTACT RAIL ANCHOR INSTALLATION	•			•			
TPE50-35	WASHINGTON BLVD SUBSTATION TRACTION POWER RAIL FEEDER DETAILS	•			•			
TPE50-40	WASHINGTON BLVD SUBSTATION CABLE LAYOUT SECTIONS AND DETAILS	•			•			
TPE50-41	WASHINGTON BLVD SUBSTATION TRACTION POWER DETAILS	•			•			
TPE50-42	STP-504 SUBSTATION NAMETAG STANDARDS				•			
TPE60-01	WASHINGTON BLVD SUBSTATION EXISTING SINGLE LINE DIAGRAM	•			•			
TPE60-02	WASHINGTON BLVD SUBSTATION EXISTING SINGLE LINE DIAGRAM MODIFICATION	•			•			
TPE60-03	WASHINGTON BLVD SUBSTATION DC AUX. CONTROL SCHEMATIC DIAGRAM	•			•			
TPE60-04	WASHINGTON BLVD SUBSTATION SCHEMATIC DIAGRAM FEEDER BREAKER	•			•			
TPE60-05	WASHINGTON BLVD SUBSTATION INTERCONNECTION DIAGRAM FOR NEW DC SWGR CUBICLES	•			•			
TPE60-06	WASHINGTON BLVD SUBSTATION INTERCONNECTION DIAGRAM SCADA CABINET DRAWING	•			•			
TPE60-11	WASHINGTON BLVD SUBSTATION CABLE SCHEDULE	•			•			
TPE60-12	WASHINGTON BLVD SUBSTATION CABLE SCHEDULE	•			•			
TPE60-13	WASHINGTON BLVD SUBSTATION CABLE SCHEDULE	•			•			
TPE60-14	WASHINGTON BLVD SUBSTATION SCADA POINT LIST	•			•			
08-MECHANICAL								
M00-01	MECHANICAL GENERAL NOTES, SYMBIOLS AND ABBREVIATIONS	•		•	•	•		
M10-01	OVERALL LEVEL 01 - MECHANICAL PLAN	•			•	•		
M10-02	OVERALL LEVEL 02 - PLATFORM MECHANICAL PLAN	•			•			
M11-01	ENLARGED - MECHANICAL PLAN	•		•	•	•		
M20-01	MECHANICAL SECTIONS AND ENLARGED PLANS	•		•	•			
M60-01	MECHANICAL SCHEDULES	•		•	•			
09-PLUMBING								
P00-01	PLUMBING GENERAL NOTES, SYMBOLS AND ABBREVIATIONS	•			•			
P10-00	OVERALL BELOW GRADE- PLUMBING PLAN	•		•	•			
P10-01	OVERALL LEVEL 01 - PLUMBING PLAN	•		•	•			
P10-02	OVERALL LEVEL 02 - PLATFORM PLUMBING PLAN	•			•			

SHEET NUMBER	SHEET NAME	ISSUE FOR PERMIT	ISSUE FOR OUC EFP	BUILDING PERMIT CORRECTIONS 1	ISSUE FOR BID	BUILDING PERMIT CORRECTIONS 2	BUILDING PERMIT CORRECTIONS 3	ISSUE FOR BID - REVISION 1
P10-03	OVERALL LEVEL 03 - BRIDGE PLUMBING PLAN	•			•			
P10-04	OVERALL LEVEL 04 - PLUMBING PLAN	•			•			
P11-00	ENLARGED BELOW GRADE - PLUMBING PLAN	•		•	•			
P11-01	ENLARGED LEVEL 01 - PLUMBING PLAN	•			•			
P11-02	ENLARGED LEVEL 02 - PLATFORM PLUMBING PLAN	•			•			
P11-03	ENLARGED LEVEL 03 - BRIDGE PLUMBING PLAN	•			•			
P11-04	ENLARGED LEVEL 04 - PLUMBING PLAN	•			•			
P50-01	PLUMBING RISER DIAGRAMS	•			•			
P50-02	PLUMBING DETAILS	•			•			
P50-03	PLUMBING DETAILS	•			•			
P60-01	PLUMBING SCHEDULES & CALCULATIONS	•			•			
10-COMMUNICATIONS								
T00-01	TELECOMM GENERAL NOTES, SYMBOLS AND ABBREVIATIONS	•			•			
T10-01	OVERALL LEVEL 01 - TELECOMMUNICATIONS PLAN	•			•			
T10-02	OVERALL LEVEL 02 - PLATFORM TELECOMMUNICATIONS PLAN	•			•			
T10-03	OVERALL LEVEL 03 - BRIDGE TELECOMMUNICATIONS PLAN	•			•			
T11-01	ENLARGED LEVEL 01 - TELECOMMUNICATIONS PLAN	•			•			
T50-01	COMMUNICATIONS STANDARDS DETAILS PA SPEAKERS	•			•			
T50-02	COMMUNICATIONS STANDARD DETAILS PA SPEAKERS	•			•			
T50-03	COMMUNICATIONS STANDARD DETAILS TELEPHONES	•			•			
T50-04	COMMUNICATIONS STANDARD DETAILS TELEPHONES	•			•			
T50-05	COMMUNICATIONS STANDARD DETAILS CAMERAS	•			•			
T50-06	COMMUNICATIONS STANDARD DETAILS DYNAMIC MESSAGE SIGN	•			•			
T50-07	COMMUNICATIONS STANDARD DETAILS COMM HUB	•			•			
T50-08	COMMUNICATIONS STANDARD DETAILS WALLFIELD DETAIL	•			•			
T50-09	COMMUNICATIONS STANDARD DETAILS CABINET ELEVATION DETAIL	•			•			
T50-10	COMMUNICATIONS STANDARD DETAILS CABINET POWER DISTRIBUTION	•			•			
T50-11	COMMUNICATIONS STANDARD DETAILS UPS CABINET ELEVATION	•			•			
T50-12	COMMUNICATIONS STANDARD DETAILS UPS POWER CONNECTION DETAIL	•			•			
T60-01	TELECOMM RISER DIAGRAM	•			•			
T60-02	PUBLIC ADDRESS SYSTEM ONE LINE DIAGRAM	•			•			
T60-03	CARD READER SYSTEM ONE LINE DIAGRAM	•			•			
T60-04	TELEPHONE SYSTEM ONE LINE DIAGRAM	•			•			
T60-05	CCTV SYSTEM ONE LINE DIAGRAM	•			•			
T60-06	COMMUNICATIONS POWER SYSTEM ONE LINE DIAGRAM	•			•			
T60-07	ELEVATOR COMMUNICATIONS SYSTEM ONE LINE DIAGRAM	•			•			
T60-08	FARE CONTROL SYSTEM ONE LINE DIAGRAM	•			•			
11-SOILS								
SM-01	SOIL MANAGEMENT PLAN	•			•			
12-SIGNALS								
TC-001	SIGNAL SYMBOLS - LEGEND GENERAL NOTES				•			
TC-165	MESSENGER INSTALLATION DETAILS 1 OF 2				•			
TC-166	MESSENGER INSTALLATION DETAILS 2 OF 2				•			
TC-167	TYPICAL CABLE PLAN				•			
TC-170	TYPICAL EXPRESS CABLE JUNCTION BOX DETAIL				•			
TC-171	TYPICAL EXPRESS CABLE JUNCTION BOX DETAIL 1 OF 3				•			
TC-172	TYPICAL EXPRESS CABLE JUNCTION BOX DETAIL 2 OF 3				•			
TC-173	TYPICAL EXPRESS CABLE JUNCTION BOX DETAIL 3 OF 3				•			
TCC-240	TYPICAL PLATFORM EQUIPMENT LAYOUT				•			
TCC-241	TYPICAL 14 FEET PLATFORM DETAILS 1 OF 4				•			
TCC-241A	TYPICAL14 FEET PLATFORM DETAILS 2 OF 4				•			
TCC-241B	TYPICAL 14 FEET PLATFORM DETAILS 3 OF 4				•			
TCC-241C	TYPICAL 14 FEET PLATFORM DETAILS 4 OF 4				•			
TCC-246	TYPICAL 18 FEET END OF PLATFORM DETAILS 1 OF 2				•			
TCC-247	TYPICAL 18 FEET END OF PLATFORM DETAILS 2 OF 2				•			
TCC-248	TYPICAL BLENDED TRACK ACCESS STAIRS WITH WAYSIDE SIGNAL PLATFORM				•			

DESIGN BY:								
DRAWN BY:								
CHECKED BY:								
APPROVED BY:			09/29/20	ISSUE FOR BID - REVISION 1	BS	AS	JH	
CDOT/APPROVED BY:		NO.	DATE	REVISIONS	DES.	DRW.	CHK.	DCCO	CDOT

PERKINS+WILL
The Wrigley Building
410 North Michigan Ave.
Suite 1600
Chicago, IL 60611
t 312.755.0770
f 312.755.0775
www.perkinswill.com

CDOT
CHICAGO DEPARTMENT OF TRANSPORTATION
DIVISION OF ENGINEERING

154 N DAMEN AVE - DAMEN GREEN LINE STATION

DRAWING INDEX - PART 2

CDOT PROJECT D-7-135

DATE: 09/29/20

SPEC. NO.

DRAWING NO. **G00-02**

REVISION NO.

GENERAL PROJECT NOTES

1. ELEVATIONS SHOWN ON THE PLANS ARE BASED ON CHICAGO CITY DATUM WHICH IS 579.88 FEET ABOVE MEAN SEA LEVEL, NEW YORK 1935 ADJUSTMENT.

2. CONSTRUCTION AND MATERIALS SHALL COMPLY WITH APPLICABLE REQUIREMENTS OF THE CHICAGO TRANSIT AUTHORITY AND CHICAGO DEPARTMENT OF TRANSPORTATION AND OF THE LAWS, CODES, ORDINANCES AND REGULATIONS OF FEDERAL, STATE AND MUNICIPAL AUTHORITIES HAVING JURISDICTION.

3. ALL WORK IN THE PUBLIC WAY REQUIRES A PERMIT FROM THE OFFICE OF EMERGENCY MANAGEMENT AND COMMUNICATIONS, CITY HALL, 9TH FLOOR.

4. THE CONTRACTOR MAY BE REQUIRED TO PAY INSPECTION FEES TO THE VARIOUS DEPARTMENTS OF THE CITY OF CHICAGO. THE COSTS WILL BE CONSIDERED INCIDENTAL TO THE CONTRACT.

5. THE CONTRACTOR MUST OBTAIN ALL NECESSARY PERMITS FROM THE CITY OF CHICAGO AND THE STATE OF ILLINOIS PRIOR TO COMMENCING CONSTRUCTION. THE COSTS SHALL BE CONSIDERED INCIDENTAL TO THE CONTRACT.

6. IN THE EVENT OF A CONFLICT OR INCONSISTENCY IN OR AMONG THE CONTRACT DOCUMENTS, OR BETWEEN THE CONTRACT DOCUMENTS AND APPLICABLE CODES IN EFFECT AT THE TIME THE CONTRACT SUM IS BID OR NEGOTIATED, THE CONTRACTOR SHALL PROVIDE THE MATERIAL, EQUIPMENT OR WORK THAT REPRESENTS: THE GREATEST QUANTITY; HIGHEST QUALITY; HIGHEST DEGREE OF SAFETY; BEST PERFORMANCE; AND ADHERENCE TO THE MOST STRINGENT CRITERIA AMONG THE CONFLICTING OR INCONSISTENT INFORMATION.

7. THE CITY DOES NOT GUARANTEE THE COMPLETENESS OR ACCURACY OF THE INFORMATION SHOWN ON THE DRAWINGS, INCLUDING UTILITIES. IT IS IMPERATIVE THAT THE CONTRACTOR FULLY FAMILIARIZE ITSELF WITH ALL EXISTING STRUCTURES, SEWER AND UTILITY LOCATIONS, SITE CONDITIONS, EXISTING BUILDING DRAWINGS, SURVEYS AND REPORTS. THE CONTRACTOR SHALL FIELD VERIFY ALL DIMENSIONS AND CONDITIONS SHOWN OR DESCRIBED TO BE EXISTING BY ITS OWN FIELD SURVEY PRIOR TO THE START OF SHOP DRAWING PREPARATION, FABRICATION OR SITE CONSTRUCTION. SUCH FIELD SURVEY DETERMINATION UTILIZING TEST PITS TO DETERMINE THE VERTICAL AND HORIZONTAL DIMENSIONAL LOCATIONS OF ALL POTENTIALLY AFFECTED UTILITIES. NOTIFY THE COMMISSIONER OF DISCREPANCIES IN WRITING BEFORE PROCEEDING WITH THE WORK.

8. THE COMMISSIONER WILL NOT BE RESPONSIBLE FOR NOR WILL HAVE CONTROL OVER OR CHARGE OF QUALITY CONTROL, CONSTRUCTION MEANS, METHODS, TECHNIQUES, SEQUENCES, PHASING OR PROCEDURES OR SAFETY PRECAUTIONS AND PROGRAMS IN CONNECTION WITH THE WORK, NOR WILL THEY BE RESPONSIBLE FOR THE CONTRACTOR'S FAILURE TO CARRY OUT THE WORK IN ACCORDANCE WITH THE REQUIREMENTS OF THE CONTRACT DOCUMENTS. THE CONTRACTOR WILL HAVE SOLE RESPONSIBILITY OF THESE ITEMS. THE COMMISSIONER WILL NOT BE RESPONSIBLE FOR OR HAVE CONTROL OR CHARGE OVER THE ACTS OR OMISSIONS OF THE CONTRACTORS, THEIR AGENTS OR EMPLOYEES, OR ANY OTHER PERSON PERFORMING ANY OF THE WORK.

9. DETAILS SHOWN MAY NOT NECESSARILY GRAPHICALLY REPRESENT ALL COMPONENTS NECESSARY TO COMPLETE THE TOTAL SYSTEM. THE CONTRACTOR SHALL BE RESPONSIBLE TO COORDINATE ALL OF THE REQUIREMENTS SHOWN ON THE DRAWINGS WITH THOSE STATED IN THE APPLICABLE SPECIFICATIONS AND PROJECT NOTES TO PROVIDE A COMPLETE SYSTEM.

10. DETAILS SHOWN ARE INTENDED TO BE INDICATIVE OF THE PROFILES AND TYPE OF DETAILING REQUIRED FOR THE WORK. CONDITIONS NOT COVERED BY SPECIFIC DETAILS ARE SIMILAR IN CHARACTER AND QUALITY TO THOSE DETAILED AND SHALL MEET SPECIFIED DESIGN CRITERIA.

11. DIMENSIONS WILL GOVERN; DO NOT SCALE DRAWINGS.

12. WHERE SPECIFIC DIMENSIONS, DETAILS, OR DESIGN INTENT CANNOT BE DETERMINED, CONSULT THE COMMISSIONER IN WRITING BEFORE PROCEEDING WITH THE WORK.

13. THE EXISTING TRACK BENT COLUMN TO COLUMN SPACING VARIES. DIMENSIONS SHOWN INDICATE THE "GRID" DIMENSIONS, EXISTING CONDITION SURVEY INFORMATION ONLY. THE CONTRACTOR SHALL CONDUCT ITS OWN FIELD SURVEY TO ESTABLISH EXISTING DIMENSIONAL PARAMETERS AS RELATES TO THE DESIGN BEFORE PROCEEDING WITH THE WORK. NOTIFY THE COMMISSIONER IN WRITING OF DISCREPANCIES WHICH WILL NOT ALLOW EXECUTION OF THE DESIGN AS SHOWN.

14. ELEMENTS SHALL BE SHOP FABRICATED TO THE GREATEST EXTENT POSSIBLE AND SHIPPED PROTECTED TO REDUCE FIELD WELDING AND FIELD TOUCH UP.

15. WHEN NOTED ON THE DRAWINGS OR IN THE SPECIFICATIONS THE CONTRACTOR SHALL PROVIDE MOCKUPS WHICH, WHEN ACCEPTED, MAY BECOME PART OF THE FINAL WORK AT THE COMMISSIONER'S APPROVAL.

16. MOVING UTILITIES WILL BE THE RESPONSIBILITY OF THE UTILITY OWNERS EXCEPT AS NOTED ON THE PLANS, IN THE GENERAL NOTES, AND IN THE SPECIFICATIONS. THE CONTRACTOR WILL BE RESPONSIBLE FOR COORDINATING ANY UTILITY RELOCATION(S). THE CONTRACTOR SHALL NOTIFY UTILITY COMPANIES IN ADVANCE, ALLOWING SUFFICIENT TIME TO COMPLETE THE WORK IN ACCORDANCE WITH THE CONTRACTOR'S SCHEDULE. COORDINATION EFFORTS WILL BE CONSIDERED INCIDENTAL TO THE CONTRACT.

17. AS-BUILT PLANS WILL BE SUBMITTED SOON AFTER WORK COMPLETION. FINAL PAYMENT WILL NOT BE MADE TO THE CONTRACTOR UNTIL THE DEPARTMENT ACKNOWLEDGES RECEIPT OF AS-BUILT PLANS. CONTRACTOR WILL SUBMIT COMPLETE SET OF AS-BUILT DRAWINGS AND COMPLETE SET OF PLANS ON A CD IN PDF FORMAT TO CHICAGO DEPARTMENT OF TRANSPORTATION, DIVISION OF ENGINEERING. THE COST FOR ALL PAPER AND ELECTRONIC AS-BUILT PLANS WILL BE CONSIDERED IN THE COST OF THE CONTRACT.

18. THE CONTRACTOR SHALL BE RESPONSIBLE FOR CLEANING, REMOVING, OR REPAIRING ANY GRAFFITI AND/OR VANDALISM WITHIN THE PROJECT LIMITS.

19. BEFORE CONSTRUCTION COMMENCES, A PROFESSIONAL SURVEYOR MUST CHECK AND RECORD THE ELEVATION AND LOCATION OF EACH CTA COLUMN, ADJACENT BUILDINGS, AND BUILDING FOUNDATIONS BETWEEN STATION 32+50 AND STATION 37+90 OF THE ROADWAY. THE SURVEYOR MUST CHECK THE COLUMNS, BUILDING FOUNDATIONS, AND UNCOVERED UNDERGROUND UTILITIES THROUGHOUT CONSTRUCTION FOR SETTLEMENT AND DEFLECTION CAUSED BY CONSTRUCTION OPERATIONS, AS DIRECTED BY THE COMMISSIONER.

    AT A MINIMUM, COLUMNS WITHIN 25' OF TRENCHING OR EXCAVATION OPERATIONS MUST BE CHECKED FOR MOVEMENT DAILY WHILE TRENCHES OR AREAS OF EXCAVATION ARE OPEN, WEEKLY THROUGHOUT CONSTRUCTION, AND AT THE CONCLUSION OF CONSTRUCTION UNTIL IT IS DETERMINED THAT NO MOVEMENT IS OCCURRING. BUILDINGS AND BUILDING FOUNDATIONS WITHIN 25' OF TRENCHING OR EXCAVATION OPERATIONS MUST BE CHECKED FOR MOVEMENT DAILY WHILE TRENCHES OR AREAS OF EXCAVATION ARE OPEN. ONCE TRENCHING OR EXCAVATION WITHIN 25' OF A BUILDING OR BUILDING FOUNDATION IS BACKFILLED, BUILDINGS AND BUILDING FOUNDATIONS MUST BE CHECKED AT LEAST WEEKLY FOR AT LEAST 2 WEEKS OR UNTIL IT IS DETERMINED THAT NO MOVEMENT IS OCCURRING. A FINAL CHECK OF ALL BUILDINGS AND BUILDING FOUNDATIONS MUST BE CONDUCTED AT THE CONCLUSION OF CONSTRUCTION. IF ANY UTILITIES ARE UNCOVERED WITHIN AN AREA OF EXCAVATION, THE SURVEYOR MUST CHECK AND RECORD THEIR LOCATION AND ELEVATION. THE LOCATION AND ELEVATION OF THE UTILITY MUST BE CHECKED DAILY WHILE EXPOSED.

    FURTHERMORE, THE COMMISSIONER MAY DIRECT THE SURVEYOR TO CHECK ADDITIONAL COLUMNS, BUILDINGS, BUILDING FOUNDATIONS, OR UTILITIES IN AREAS OF CONCERN WITHIN THE PROJECT LIMITS AT ANY TIME. ANY SETTLEMENT OR DEFLECTION OF ANY STRUCTURE, COLUMN, BUILDING, FOUNDATION, OR UTILITY MUST BE IMMEDIATELY BROUGHT TO THE ATTENTION OF THE COMMISSIONER , AND ALL WORK IN THE AREA MUST CEASE UNTIL A PLAN IS APPROVED BY THE COMMISSIONER ADDRESSING THE ISSUE. THIS WORK WILL NOT BE PAID SEPARATELY, BUT WILL BE CONSIDERED INCLUDED IN THE COST OF THE CONTRACT.

20. PROVIDE CONTINUOUS TEMPORARY ACCESS TO ALL SIDE STREETS, ALLEYS, DRIVEWAYS, AND PARKING LOTS UNLESS SPECIFICALLY IDENTIFIED ON THE PLANS FOR TEMPORARY CLOSURE. LOTS WITH MORE THAN ONE DRIVEWAY MUST BE STAGED TO KEEP AT LEAST ONE DRIVEWAY OPEN AT ALL TIMES.

21. PROVISIONS FOR PEDESTRIAN TRAFFIC MUST BE PROVIDED AT ALL TIMES FOR BOTH SIDES OF THE STREET AND AT ALL INTERSECTION CORNERS. TEMPORARY ASPHALT OR PLYWOOD RAMPS SHALL BE BUILT TO PROVIDE AN ALTERNATIVE PATH OF TRAVEL AND MAINTAIN CONTINUAL ACCESS TO PEDESTRIANS PER TRAFFIC CONTROL & PROTECTION REQUIREMENTS. THE WALKING PATH MUST BE A MINIMUM OF 3' WIDE AND SHIELDED FROM TRAFFIC BY TEMPORARY CONCRETE BARRIER OR AS DIRECTED BY THE COMMISSIONER. TEMPORARY RAMPS SHALL BE INSTALLED AT A TAPER RATE NO STEEPER THAN 1:14 (V:H).

22. THE CONTRACTOR MUST WALK THROUGH THE PROJECT SITE WITH THE COMMISSIONER BEFORE CONSTRUCTION TO CONFIRM THE COUNT OF STREET SIGNS, PARKING METERS, AND PAY-TO-PARK BOXES TO BE REMOVED OR RELOCATED.

23. ANY REMOVAL OR RELOCATION OF PARKING METERS OR PAY-TO-PARK BOXES REQUIRED DUE TO CONSTRUCTION MUST BE PERFORMED BY THE CITY OF CHICAGO OR A DESIGNATED AGENCY ONLY. ANY APPLICABLE FEES OR COST RELATED TO THIS WORK WILL BE PAID FOR BY THE CONTRACTOR AND WILL BE CONSIDERED INCIDENTAL TO THE CONTRACT.

24. VERIFY LOCATION OF ALL BUILDING ACCESS, COORDINATE WITH BUILDING OWNERS AND LOCAL AUTHORITIES AND PROVIDE FULL ACCESS TO BUSINESSES OR PROPERTIES DURING THEIR NORMAL WORKING HOURS IN ACCORDANCE WITH ADA AND APPLICABLE CODE REQUIREMENTS.

25. MAINTAIN ACCESS TO FIRE HYDRANTS, BUILDING STANDPIPES AND OTHER EMERGENCY FACILITIES WITHIN AND ADJACENT TO THE CONSTRUCTION ZONE.

26. REGULATORY, WARNING, AND GUIDE SIGNS CONFLICTING WITH THE PROPOSED IMPROVEMENT MUST BE RELOCATED BY THE CONTRACTOR AS DIRECTED BY THE COMMISSIONER. THE COST WILL BE INCIDENTAL TO TRAFFIC CONTROL AND PROTECTION.

27. THE CONTRACTOR MUST COMPLETE CLEANUP AND RESTORATION OF THE ENTIRE PROJECT AREA, INCLUDING STAGING AND STORAGE AREAS, AS APPROVED BY THE COMMISSIONER, WITHIN THIRTY (30) DAYS OF SUBSTANTIAL COMPLETION. ANY AREA DAMAGED WITHIN THE PROJECT SITE DURING CONSTRUCTION MUST BE IMMEDIATELY RESTORED TO ITS ORIGINAL CONDITION BY THE CONTRACTOR AT HIS OWN EXPENSE.

28. THE CONTRACTOR WILL BE RESPONSIBLE FOR THE PRESERVATION OF ALL PRIVATE AND CITY OF CHICAGO PROPERTY AND MUST CAREFULLY PROTECT FROM DAMAGE OR DISTURBANCE. IF DAMAGE TO PROPERTY DOES OCCUR DURING THE WORK, THE CONTRACTOR MUST RESTORE, AT NO EXPENSE TO THE OWNER, SUCH PROPERTY TO A CONDITION EQUAL TO THAT EXISTING BEFORE SUCH DAMAGE WAS DONE BY REBUILDING OR RESTORING AS DIRECTED BY THE COMMISSIONER.

DESIGN BY:									
DRAWN BY:									
CHECKED BY:									
APPROVED BY:			01/27/2020	ISSUE FOR BID	BS	AS	JH		
CDOT/APPROVED BY:		NO.	DATE	REVISIONS	DES.	DRW.	CHK.	DCCO	CDOT

PERKINS+WILL
The Wrigley Building
410 North Michigan Ave.
Suite 1600
Chicago, IL 60611
t 312.755.0770
f 312.755.0775
www.perkinswill.com

CDOT
CHICAGO DEPARTMENT OF TRANSPORTATION
DIVISION OF ENGINEERING

154 N DAMEN AVE - DAMEN GREEN LINE STATION

GENERAL PROJECT NOTES

CDOT PROJECT D-7-135

DATE: 01/27/2020

SPEC. NO.

DRAWING NO. G10-00

REVISION NO.

GENERAL PHASING NOTES

1. PHASING INFORMATION IS PROVIDED FOR GUIDANCE ONLY. THE CONTRACTOR SHALL DEVELOP AND SUBMIT FOR APPROVAL A DETAILED CONSTRUCTION PHASING PLAN WHICH COMPLIES WITH ALL OPERATIONAL RESTRICTIONS LISTED IN THE CONTRACT DOCUMENTS. THE CONSTRUCTION SEQUENCES SHOWN/NOTED ARE SUGGESTED SEQUENCES. IT IS NOT THE INTENT OF THE PHASING PROGRAM TO SPELL OUT EVERY DETAIL OF WORK OR TO DEFINE THE MEANS, METHODS AND MATERIALS INVOLVED IN THE PHASING, EXCEPT AS MAY BE REQUIRED BY THE COMMISSIONER OR OTHER AGENCIES HAVING JURISDICTION. IT IS SOLELY THE CONTRACTOR'S RESPONSIBILITY TO COORDINATE THE VARIOUS PHASES TO ASSURE THE EFFICIENT, TIMELY, AND SAFE PROGRESSION OF THE WORK.
2. CONTRACTOR TO MAINTAIN PROPER AND ADEQUATE SURFACE DRAINAGE AND STORMWATER MANAGEMENT PRACTICES DURING ALL PHASES OF CONSTRUCTION.
3. CONTRACTOR IS RESPONSIBLE FOR TEMPORARILY RELOCATING TRAFFIC SIGNALS AS REQUIRED DURING CONSTRUCTION. NO TRAFFIC SIGNALS MAY BE MODIFIED IN ANY WAY WITHOUT THE PERMISSION OF THE COMMISSIONER AND OEMC.
4. CONDUITS AND CABLES ON THE CTA STRUCTURE WILL BE RELOCATED BY THE CONTRACTOR AND TEMPORARILY SUPPORTED UNTIL THE NEW PLATFORM STRUCTURE IS IN PLACE.
5. MOVING UTILITIES WILL BE THE RESPONSIBILITY OF THE UTILITY OWNERS EXCEPT AS NOTED ON THE PLANS, IN THE GENERAL NOTES, AND IN THE SPECIFICATIONS. THE CONTRACTOR WILL BE RESPONSIBLE FOR COORDINATING ANY UTILITY RELOCATION(S). THE CONTRACTOR SHALL NOTIFY UTILITY COMPANIES IN ADVANCE, ALLOWING SUFFICIENT TIME TO COMPLETE THE WORK IN ACCORDANCE WITH THE CONTRACTOR'S SCHEDULE. COORDINATION EFFORTS WILL BE CONSIDERED INCIDENTAL TO THE CONTRACT.
6. CONTRACTOR TO PROVIDE GRAPHIC SIGNS WARNING THE PUBLIC OF HAZARD AREAS.
7. ADDITIONAL SIGNS MAY BE REQUIRED AS DIRECTED BY THE COMMISSIONER AT NO ADDITIONAL COST.
8. CONTRACTOR TO NOT INTERFERE WITH THE CTA'S OPERATION. THE CURRENT CTA TRAIN SCHEDULE, WHICH IDENTIFIES HOURS OF ALL CTA RAIL LINES IS AVAILABLE ON CTA'S WEBSITE AND SUBJECT TO CHANGE. SEE SPECIFICATION SECTION 01 35 15 SPECIAL PROJECT PROCEDURES FOR ADJACENT CONSTRUCTION.
9. NO LIFTING/JACKING OF THE CTA STRUCTURE MAY BE PERFORMED WHILE REVENUE TRAINS ARE IN SERVICE.
10. ALL TRACK LEVEL WORK AND WORK ADJACENT TO THE TRACK LEVEL SHALL BE COMPLETED UNDER FLAGGING. COORDINATION OF FLAGGING IS THE RESPONSIBILITY OF THE CONTRACTOR. CONTRACTOR MUST RECEIVE CONFIRMATION THAT CTA SUPERVISION AND FLAGGING IS AVAILABLE PRIOR TO COMMENCEMENT OF WORK.
11. THE CONTRACTOR WILL COORDINATE ALL CONSTRUCTION RELATED ACTIVITIES WITH THE CTA'S NORMAL TRAIN SCHEDULE AND OPERATION REQUIREMENTS. TRACK CLOSURE OUTSIDE OF THE NORMAL NIGHT TIME PERIODS WHEN PASSENGER TRAIN SERVICE IS NOT OFFERED WILL NOT BE ALLOWED, EXCEPT AS SPECIFICALLY PERMITTED AND DESCRIBED IN THE CONSTRUCTION DOCUMENTS (INCLUDING NOTE BELOW).
12. QUANTITY LIMITS ON TRACK ACCESS OCCURRENCES ARE AS STATED BELOW, WITH SCHEDULE DEPENDENT ON APPROVAL BY THE COMMISSIONER. REFERENCE SPECIFICATION SECTION 01 35 15 SPECIAL PROJECT PROCEDURES FOR ADJACENT CONSTRUCTION AND ADDITIONAL CONSTRAINTS.
    WEEKEND TWO TRACK RE-ROUTES (50 HOUR) SHALL NOT EXCEED 1 OCCURRENCE FOR THE SPECIFIC PURPOSE OF THE PEDESTRIAN BRIDGE INSTALLATION.
    WEEKEND ONE TRACK RE-ROUTES (50 HOUR) SHALL NOT OCCUR.
    SUNDAY RE-ROUTES (12 HOUR) SHALL NOT OCCUR.
13. TRACK REROUTES AND ANY CONSTRUCTION ACTIVITIES WHICH IN THE OPINION OF THE COMMISSIONER MAY POSE A THREAT TO CTA SERVICE ON OR ADJACENT TO ACTIVE CTA RIGHT-OF-WAY AT TRACK LEVEL WILL NOT BE PERMITTED DURING MONDAY THROUGH FRIDAY – 5:00 AM TO 7:00 PM OR DURING THE FOLLOWING SPECIAL EVENTS:

a. TASTE OF CHICAGO	d. CHICAGO MARATHON	g. CHICAGO ST. PATRICK'S DAY PARADE	j. THE SATURDAY BEFORE THANKSGIVING DAY THRU	l. CHICAGO CUBS HOME GAMES	o. LOLLAPOLOOZA	r. SUMMERDANCE
b. INDEPENDENCE DAY	e. CHICAGO JAZZ FESTIVAL	h. EASTER SUNDAY	THE MONDAY FOLLOWING NEW YEAR'S DAY	m. CHICAGO BEARS HOME GAMES	p. SHAMROCK SHUFFLE	s. PITCHFORK
c. CHICAGO AIR AND WATER SHOW	f. CHICAGO BLUES FESTIVAL	i. GOSPEL FEST	k. CHICAGO WHITE SOX HOME GAMES	n. BIKE THE DRIVE	q. PRIDE DAY PARADE	t. OTHER DATES DETERMINED BY THE COMMISSIONER

14. SEE CIVIL DRAWINGS FOR CONSTRUCTION BARRICADES AND MOT DRAWINGS.
15. ANY GRAFFITI THAT OCCURS DURING CONSTRUCTION INCLUDING THAT ON THE CONSTRUCTION BARRICADES MUST BE REMOVED BY THE CONTRACTOR DURING CONSTRUCTION WITHIN 24 HOURS.
16. AREAS WITHIN THE WORK ZONE THAT DO NOT INHIBIT DRIVEWAY OR BUILDING ACCESS MAY BE USED AS STAGING AREAS.
17. CONTRACTOR WILL BE ALLOWED TO STORE MATERIALS AND EQUIPMENT ONLY IN AREAS APPROVED BY THE COMMISSIONER, AND IN ACCORDANCE WITH REQUIREMENTS AND THE CONTRACT DOCUMENTS.
18. CONTRACTOR TO COORDINATE WITH THE COMMISSIONER REGARDING LOCATION AND PLACEMENT OF CONTRACTOR'S ON SITE WORK TRAILER.

SUGGESTED CONSTRUCTION SEQUENCE:

- **C** FULL STREET CLOSURE
- **O** OFF HOUR STREET CLOSURE
- **L** PARTIAL LANE CLOSURES
- **XX** WEEKEND TWO TRACK RE-ROUTE (50 HOUR)
- **X** WEEKEND ONE TRACK RE-ROUTE (50 HOUR)
- **++** SUNDAY TRACK RE-ROUTE (12 HOUR)
- ***** DAMEN GREEN LINE STATION OPENS

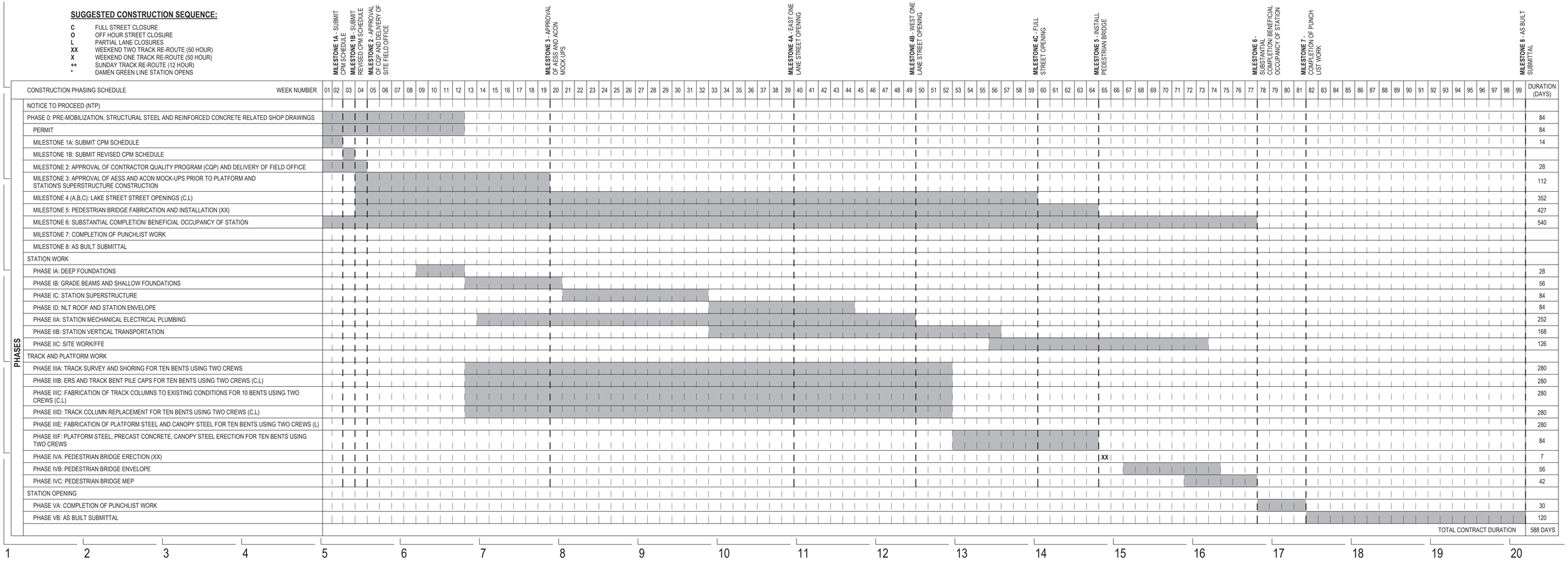

DESIGN BY:									
DRAWN BY:									
CHECKED BY:									
APPROVED BY:			01/27/2020	ISSUE FOR BID	BS	AS	JH		
CDOT/APPROVED BY:		NO.	DATE	REVISIONS	DES.	DRW.	CHK.	DCCO	CDOT

PERKINS+WILL
The Wrigley Building
410 North Michigan Ave.
Suite 1600
Chicago, IL 60611
t 312.755.0770
f 312.755.0775
www.perkinswill.com

CDOT
CHICAGO DEPARTMENT OF TRANSPORTATION
DIVISION OF ENGINEERING

154 N DAMEN AVE - DAMEN GREEN LINE STATION

SUGGESTED CONSTRUCTION SEQUENCE

CDOT PROJECT D-7-135 | DATE: 01/27/2020

SPEC. NO.

DRAWING NO. **G20-00**

REVISION NO.

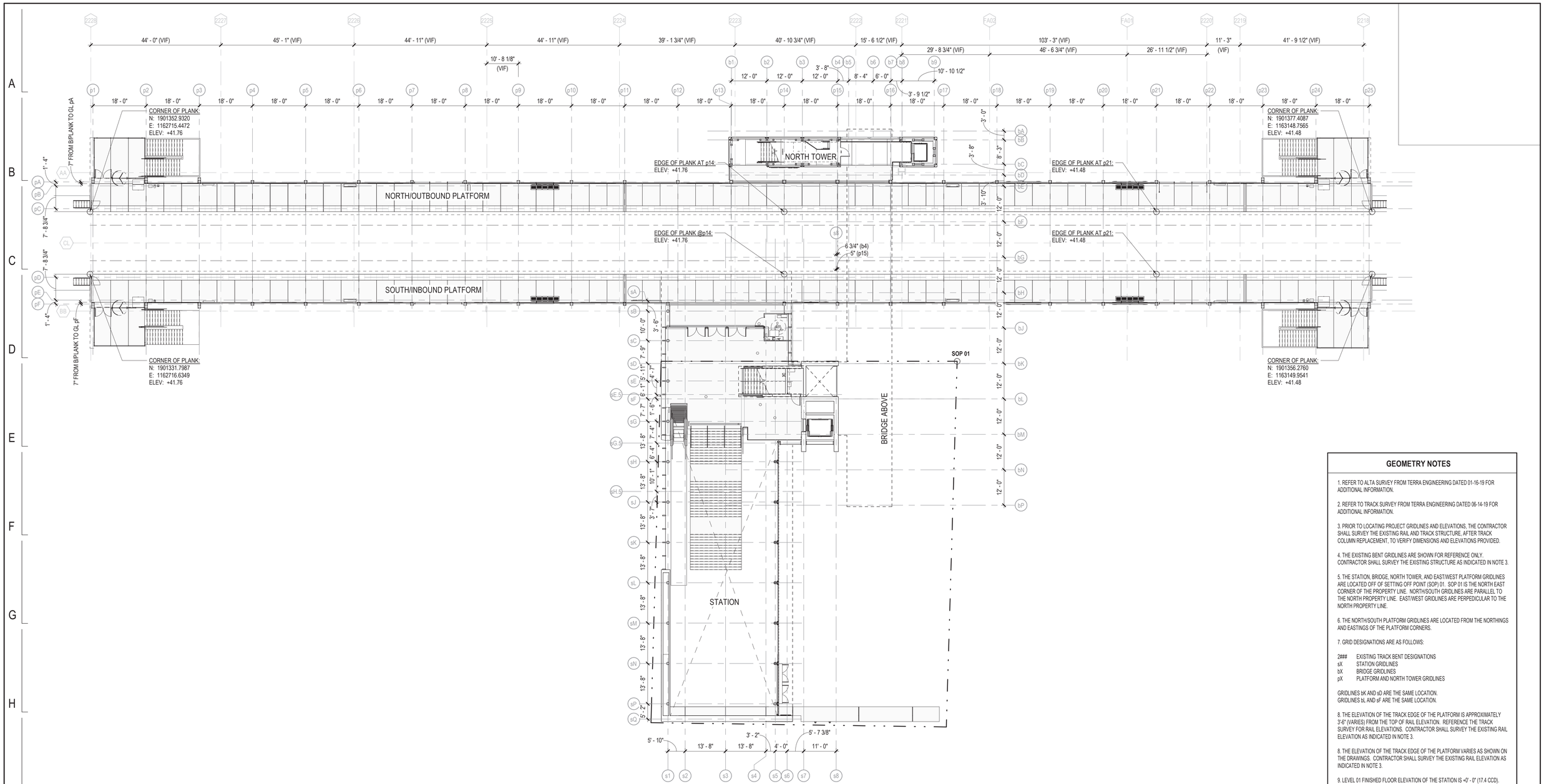

1 GEOMETRY PLAN
1/16" = 1'-0"

GEOMETRY NOTES

1. REFER TO ALTA SURVEY FROM TERRA ENGINEERING DATED 01-16-19 FOR ADDITIONAL INFORMATION.

2. REFER TO TRACK SURVEY FROM TERRA ENGINEERING DATED 06-14-19 FOR ADDITIONAL INFORMATION.

3. PRIOR TO LOCATING PROJECT GRIDLINES AND ELEVATIONS, THE CONTRACTOR SHALL SURVEY THE EXISTING RAIL AND TRACK STRUCTURE, AFTER TRACK COLUMN REPLACEMENT, TO VERIFY DIMENSIONS AND ELEVATIONS PROVIDED.

4. THE EXISTING BENT GRIDLINES ARE SHOWN FOR REFERENCE ONLY. CONTRACTOR SHALL SURVEY THE EXISTING STRUCTURE AS INDICATED IN NOTE 3.

5. THE STATION, BRIDGE, NORTH TOWER, AND EAST/WEST PLATFORM GRIDLINES ARE LOCATED OFF OF SETTING OFF POINT (SOP) 01. SOP 01 IS THE NORTH EAST CORNER OF THE PROPERTY LINE. NORTH/SOUTH GRIDLINES ARE PARALLEL TO THE NORTH PROPERTY LINE. EAST/WEST GRIDLINES ARE PERPEDICULAR TO THE NORTH PROPERTY LINE.

6. THE NORTH/SOUTH PLATFORM GRIDLINES ARE LOCATED FROM THE NORTHINGS AND EASTINGS OF THE PLATFORM CORNERS.

7. GRID DESIGNATIONS ARE AS FOLLOWS:

2###	EXISTING TRACK BENT DESIGNATIONS
sX	STATION GRIDLINES
bX	BRIDGE GRIDLINES
pX	PLATFORM AND NORTH TOWER GRIDLINES

GRIDLINES bK AND sD ARE THE SAME LOCATION.
GRIDLINES bL AND sF ARE THE SAME LOCATION.

8. THE ELEVATION OF THE TRACK EDGE OF THE PLATFORM IS APPROXIMATELY 3'-6" (VARIES) FROM THE TOP OF RAIL ELEVATION. REFERENCE THE TRACK SURVEY FOR RAIL ELEVATIONS. CONTRACTOR SHALL SURVEY THE EXISTING RAIL ELEVATION AS INDICATED IN NOTE 3.

8. THE ELEVATION OF THE TRACK EDGE OF THE PLATFORM VARIES AS SHOWN ON THE DRAWINGS. CONTRACTOR SHALL SURVEY THE EXISTING RAIL ELEVATION AS INDICATED IN NOTE 3.

9. LEVEL 01 FINISHED FLOOR ELEVATION OF THE STATION IS +0' - 0" (17.4 CCD).

SCALE: 1/16" : 1'-0"
0' 8' 16' 32' 64'

DESIGN BY:									
DRAWN BY:									
CHECKED BY:									
APPROVED BY:			01/27/2020	ISSUE FOR BID	BS	AS	JH		
CDOT/APPROVED BY:		NO.	DATE	REVISIONS	DES.	DRW.	CHK.	DCCO	CDOT

PERKINS+WILL
The Wrigley Building
410 North Michigan Ave.
Suite 1600
Chicago, IL 60611
t 312.755.0770
f 312.755.0775
www.perkinswill.com

CDOT
CHICAGO DEPARTMENT OF TRANSPORTATION
DIVISION OF ENGINEERING

154 N DAMEN AVE - DAMEN GREEN LINE STATION

GEOMETRY PLAN

CDOT PROJECT D-7-135 | DATE: 01/27/2020

SPEC. NO.

DRAWING NO. G30-00

REVISION NO.

JJ/AR

CITY OF CHICAGO
DEPARTMENT OF BUILDINGS
Alternative Code Approval Request

USE BLACK INK. DO NOT WRITE IN SHADED AREAS.	Request Number:	Fee: /150.00	Date: 3/8/19 3/15/19 payment sent rec'd.

1. Contact Information

Contact name: Jeffrey E. Harper, P.E. | Contact phone: (312) 879-7200
E-mail decision to: jharper@jenschughes.com

2. Project Information

Address: 154 N. Damen Avenue (New CTA Station)
Construction Type: Type II | No. Stories: 2
Scope: ☒ new construction ☐ renovation ☐ addition ☐ no work
Timing of Request:
☐ before construction $150 review fee
☐ after construction w/o permit or conditional permit $300 review fee
☐ existing non-conforming (10 years) $150 review fee
Open Violations cited by Department: ☐ yes ☒ no
Permit/Application No. (if applicable):

Occupancy Classification (check all that apply):

☐ A-1: single family residential		☐ F: mercantile
☐ A-2: all other residential		☐ G-1: industrial low hazard
☐ B: institutional		☐ G-2: industrial mod. hazard
☐ C-1: large assembly		☐ H-1: storage low hazard
☐ C-2: small assembly		☐ H-2: storage mod. hazard
☐ C-3: schools		☐ H-3: garages
☐ D: open air assembly		☐ I: hazardous
☐ E: business		☒ J: miscellaneous

3. Subject(s) of Request

☐ administrative provisions	☐ occupancy classification	☐ occupancy separation	☐ height and area
☐ fire resistive materials	☐ fire protection systems	☐ means of egress / guards	☐ accessibility
☐ natural light and ventilation	☐ structural requirements	☒ building materials	☐ electrical
☐ HVAC / mechanical	☐ plumbing systems / materials	☐ plumbing fixture count	☐ elevators / conveyance devices
☐ tents and temporary structures	☐ construction site operations	☐ cranes and hoists	

4. Specific Request

Applicable code section(s): 13-60-030; 13-88-060(b)

Narrative Request:

Permit use of combustible materials (mass timber) for the roof assembly over the enclosed portion of the new Damen Green Line train station. The roof will be covered with a "green roof", making the only exposure of the mass timber roof to be from the inside. The roof slab is proposed to be a nominal 10-inch NLT (nail laminated timber) slab comprised of Douglas Fir wood species. All the structure used to support the NLT roof slab will be of the noncombustible materials as required of the Type II construction type required for open air assembly occupancies. Because the untreated flamespread rating of Douglas Fir is a Class 2/Class 3, the interior exposed face of the NLT roof slab will need to be treated with a fire retardant application to reduce the interior finish rating to be Class I as prescribed by the CBC. Section 13-88-060(b) would permit the use of heavy timber assemblies that are considered 1 story tall and having an occupant load of less than 10,000 persons. The site is not located within the fire limits.

Section 13-88-060(b) would permit the use of HT materials, but one of the provisions is the use of fire rated exterior walls when <20ft from an interior PL. There is a blank, masonry wall (23-foot long with 30-inch parapet) on an existing 2-story residential unit parallel with the north end of the west wall of the proposed station, situated to be 18+ feet from the property line and exterior facade of the proposed CTA structure. The lower 25ft of the west exterior wall is concrete, topped with glass for the remaining height (approx 15ft). The opposing blank walls protects the NLT roof.

Form continues on next page.

Outcome (Department Use Only)

Reviewed by: John Javorka	Date: 3-12-19	Signature: John Javorka	
Recommendation: ☒ approve ☐ deny ☐ refer to S&T			
Decision by: ASIF RAHMAN	Date: 03/13/19	Signature: Asif Rahman	
Recommendation: ☒ approve ☐ deny ☐ refer to S&T			
Comments:			

Fillable PDF available at www.cityofchicago.org/buildings Page 1 of 2 ACAR rev. 10/11/2017

ACAR APPROVAL

	Weekday	Surge Event
Headway	8 minutes	8 minutes
Surge Factor	1.3	1.3
Hourly Peak Entries (Boarding's)	893 pax/hr	1130 pax/hr
Peak direction (95% of total)	848 pax/hr	1074 pax/hr
Non Peak (5% of total)	45 pax/hr	57 pax/hr
Train Load (or link In load)	800 pax per direction/ per headway	800 pax per direction/ per headway

	Weekday		Surge	
	Peak	Non-peak	Peak	Non-peak
Peak Hour Ridership Data				
Boarding (pax/hr)	848	45	1074	57
Link In Load (pax/hr)	800	800	800	800
Headway (minutes)	8	8	8	8
Headway Loads x Surge factor (1.3)				
Boarding (per hwy)	147	8	186	10
Link In Load (per hwy)	800	800	800	800
Emergency Occupant Load Calculations				
Occupant Load (pax /hwy)	947	808	986	810
Missed Headway (pax /hwy)	1094	815	1172	820
Critical Combination	1094	808	**1172**	**810**

PLATFORM OCCUPANT LOAD CALCULATIONS

Evaluation of Time for Most Remote Occupant to Reach a Point of Safety

Step	Delay Description			
0	Both the North/Outbound and South/Inbound platforms are loaded at the maximum estimated occupant load of 1,172 based on past ridership data. 372 occupants will be exiting via the Exit Stair NW, NE and SE. 348 occupants will be exiting via the Exit Stair SW. 452 occupants will be exiting the South/Inbound platform through the Exit Stair Station. 428 occupants will be exiting the North/Outbound platform via the Exit Stair North Tower and crossing the bridge to exit through the Exit Stair Station.			
1	The most remote occupant is the last occupant of the 428 that are exiting the North/Outbound platform via the Exit Stair North Tower and then exiting via the Exit Stair Station/Station. The remote occupant will begin their evacuation located at the bottom of Exit Stair North Tower after a 3.83 minute delay due to queuing of occupants. (428 occupants through a stair with a 112 person/minute capacity.)	3.83 minutes		
	Travel Component	**Distance (ft)**	**Travel Speed (ft/min)**	**Time (min)**
2	Bottom of Exit Stair North Tower to top of Exit Stair North Tower (vertical distance)	14.8	48	0.31
3	Top of Exit Stair North Tower to top of Exit Stair Bridge (horizontal distance along the bridge between sides)	95.2	124	0.77
4	Top of Exit Stair Bridge to bottom of Exit Stair Bridge/Level 02 of station (vertical distance)	14.8	48	0.31
5	Bottom of Exit Stair Bridge to top of Exit Stair Station (horizontal distance)	28.7	124	0.23
6	This step will consider the queuing of occupants at the Exit Stair Station. It is assumed that 348 occupants will be exiting via the Exit Stair SW and 372 occupants exiting via the Exit Stair SE (maximum permitted). This leaves 452 occupants from the South/Inbound platform entering the station to use the Exit Stair Station. An additional 428 occupants are crossing the bridge from the North/Outbound platform to exit via the Exit Stair Station. This brings the total for the Exit Stair Station to 880 occupants (the most remote occupant is the last of these 880). The 880 occupants can get through the main stair with a capacity of 262 PPM in 3.36 minutes. *Because the delay in Step 1 for the bridge capacity and travel time in Steps 2, 3, 4, 5 and 7 are in excess of 3.36 minutes, there will be no queuing for the most remote occupant at the main stair.*			
7	Top of Exit Stair Station to bottom of Exit Stair Station (vertical distance). The Level 01 station area at the bottom of the Exit Stair Station is considered to be the point of safety. As permitted by NFPA 130 5.3.3.3 where the concourse is protected by distance, geometry and fire separation the concourse may be defined as the point of safety. The intent of the point of safety in this context is to permit continued egress from the concourse to the exterior of the station. Given the open station design, horizontal and vertical separation, doors at the platform level, and the platform floor construction separating the concourse from the platform, the Level 01 station area at teh bottom of the Exit Stair Station is considered to meet the requirements of 5.3.3.3 and the intent of the point of safety.	24.3	48	0.51
8	**Total Travel Time (sum of steps 1, 2, 3, 4, 5 and 7):**			**5.95**

POINT OF SAFETY CALCULATION

GENERAL BUILDING REQUIREMENTS per Chicago Zoning Ordinance (CZO) and Chicago Building Code (CBC) 2018 Edition

ITEM	ISSUE	CHAPTER/ARTICLE	Requirement	Actual	N/A	Location/Sheet No.	Agency/Test No.	REMARKS
ZONING REQUIREMENTS								
1.01	Zoning District	Chicago Zoning Ordinance						The site was previously zoned as a (C1-2) Neighborhood Commercial District. The site has been rezoned as a (T) Transportation District under Ordinance 02018-8394 Application No. A-8434 on 10/31/2018.
1.02	Lot Area			12,323 SF OR 0.283 Acres				
1.03	Maximum Floor Area Ratio	17-6-0304	May not exceed FAR of 1.5 for (T) Transportation District	0.71 FAR				8,715 SF (Building)/12,323 SF (Site) = 0.71 FAR
1.04	Total Building Area			8,715 SF				8,715 SF (Building area within property line)
1.05	Building Height - No. of Floors			Three (3)	x			There are no height requirements for a (T) Transportation District.
1.06	Minimum Yards			None	x			There are no yard requirements for a (T) Transportation District.
1.07	Grade Elevation (CCD)			17.4 CCD				
1.08	Off Street Loading				x			
1.09	Off Street Parking				x			
1.10	Landscaping	Chicago Landscape Ordinance	Four (4) bike racks are required.	Two (2) parkway trees are provided. Four (4) bike racks are provided.				See landscape drawings for allowable parkway tree locations.
BUILDING REQUIREMENTS								
2.01	Occupancy Classification(s)	3(13-56-110) 3(13-56-220)	Class J, Miscellaneous buildings and structures					For general design purposes requirements for Class D, Open Air Assembly have been used.
2.02	Height and Area Limitations	5(13-48)						
	a) Height				x			
	b) Area				x			
2.03	Types of Construction	6(13-60)	Type II, noncombustible construction					No sprinkler system is provided.
2.04	Mixed Occupancy Separations	3(13-56-280)			x			No mixed occupancy.
2.05	Required Hours of Fire Resistance	6(13-60-100)						
	Exterior Bearing Walls		N.C. (Noncombustible)	N.C. (Noncombustible)				
	Exterior Non-bearing Walls		N.C. (Noncombustible)	N.C. (Noncombustible)				
	Interior Bearing Walls		N.C. (Noncombustible)	N.C. (Noncombustible)				
	Interior Non-bearing Walls							Requirements are per 15-8-120 to 15-8-250. See Section 2.10 Fire-Resistive Requirements below.
	Columns		N.C. (Noncombustible)	N.C. (Noncombustible)				
	Columns Supporting Roofs Only		N.C. (Noncombustible)	N.C. (Noncombustible)				
	Beams		N.C. (Noncombustible)	N.C. (Noncombustible)				
	Beams Supporting Roofs Only		N.C. (Noncombustible)	N.C. (Noncombustible)				
	Floor Construction		N.C. (Noncombustible)	N.C. (Noncombustible)				
	Roof Construction		N.C. (Noncombustible)	Nail Laminated Timber (NLT) roof structure is used at the station roof structure.				An Alternative Code Approval Request (ACAR) was approved as of 3/18/2019. See approved application on this sheet.
2.06	Elevator Framing	6(13-60-120)						Structural members or frames for elevators, located wholly within elevator shaft enclosures or in penthouses, shall not be required to be fire protected.
2.07	Mezzanine Floors	6(13-60-160)			x			
2.08	Basement Construction	6(13-60-10)			x			
2.09	Driveways and Loading Spaces	6(13-60-210)			x			
2.10	Fire-Resistive Requirements							
	a) Stairway enclosures	6(13-88-090)						Enclosures of stairways and other vertical shafts shall not be required.
	b) Elevator and escalator enclosures	6(13-88-090) 7(15-8-150)						Enclosures of stairways and other vertical shafts shall not be required.
	c) Enclosure of pipe shaft and ducts	6(13-88-090)						Enclosures of stairways and other vertical shafts shall not be required.
	d) Enclosure of wells and chutes	7(15-8-170)			x			
	e) Protection of openings	7(15-8-180)			x			
	f) Enclosure of heating plants and boiler rooms	7(15-8-190)			x			
	g) Protection not required	7(15-8-200)			x			
	h) Two hour protection required	7(15-8-210)			x			
	i) One hour protection required	7(15-8-220)			x			
	j) Protection of openings	7(15-8-230)			x			
	k) Other enclosures and separations	6(13-88-110)	1 HR	1 HR				All enclosed service spaces located within an assembly structure shall have walls, ceilings, and floors of construction providing fire resistance of not less than 1 HR.
								The following rooms shall have a 2 HR horizontal and vertical fire rating:
								Maintenance (M103)
								Electrical (M104)
								UPS (M105)
								Control Room (M106)
								Electrical (M1.501)
								Control Room (M201)
	l) Partitions	7(15-8-250)						Partitions are of non-combustible materials.
2.11	Fire-Resistive Materials and Construction	7(15-12)						
2.12	Accepted Engineering Practice, Recognized Agencies	7(15-12-050)						
2.13	Fire Protection Equipment	9(15-16)						
	a) Sprinkler Systems	9(15-16-010)			x			No sprinkler system is provided.
	b) Special Requirements	9(15-16-030)			x			
EXIT REQUIREMENTS								
3.01	Types of Exits	NFPA 130						Occupant load is calculated based on pedestrian modeling of CTA data and NFPA 130. Occupant load is 1,172 occupants.
3.02	Minimum Number of Exits	NFPA 130	Two (2)	Three (3)				
3.03	Travel Distance to Exits	NFPA 130	325'	320'-1"				See code compliance plan for information.
	a) Increases Permitted	NFPA 130			x			
	b) Dead End Corridor	NFPA 130	82'		x			See code compliance plan for information.
3.04	Capacity of exits	NFPA 130						See code compliance plan for information.
3.05	Minimum width of exits	NFPA 130	44"					See code compliance plan for information.
		10(13-160-220)						Minimum width of exit doors shall be 36".
3.06	Swing of Exit Doors	10(13-160-250)						Door shall swing in direction of egress for spaces with occupant load greater than 50 occupants.
3.07	Hardware	10(13-160-260)						All doors used in connection with exits shall be so arranged as to be readily opened without the use of a key from the side from which egress is made. Doors serving more than 200 persons shall be equipped with approved latches or bolts which release under a pressure of 15 pounds. Doors in public buildings, opening into mechanical or electrical equipment rooms, stairs or entrances to vehicular traffic areas, sahll have knurled handles.
3.08	Revolving Doors				x			
3.09	Stairways - Landings	10(13-160-310)						The maximum vertical rise of a flight between floors, between landings or between a floor and a landing shall not exceed 9'-0". The length of the landing in the direction of travel shall be not less than the width of the stairs but need not exceed four feet.
3.10	Stairways - Handrails	10(13-160-320)						The height to the top of handrails shall be 2'-10" to 3'-2" above the floor and shall return to the wall. Intermediate handrails, continuous between landings, shall be provided where there is a lateral distance between handrails not exceeding 88 inches.
3.11	Stairways - Construction	10(13-160-330)						Stairs are constructed of non-combustible materials.
3.12	Stairways - Headroom	10(13-160-350)	7'-0"	7'-0" min.				
ACCESSIBILITY								
	Illinois Accessibility Code (IAC) - Public Facilities New Construction							
	ADA Title II (All programs, services and activities to be made accessible to and usable by people with disabilities)							
	Government funded projects to schedule a meeting with MOPD							Preliminary meeting was held with MOPD on 5/11/2018.
STANDARD FOR TRANSIT AND PASSENGER RAIL SYSTEMS								
	NFPA 130 - 2017 Section 5.3							
STANDARD FOR ELEVATORS AND ESCALATORS								
	ASME A17.1 SAFETY CODE FOR ELEVATORS AND ESCALATORS							

CODE ANALYSIS

DESIGN BY:									
DRAWN BY:									
CHECKED BY:									
APPROVED BY:			01/27/2020	ISSUE FOR BID	BS	AS	JH		
CDOT/APPROVED BY:		NO.	DATE	REVISIONS	DES.	DRW.	CHK.	DCCO	CDOT

PERKINS+WILL
The Wrigley Building
410 North Michigan Ave.
Suite 1600
Chicago, IL 60611
t 312.755.0770
f 312.755.0775
www.perkinswill.com

CDOT
CHICAGO DEPARTMENT OF TRANSPORTATION
DIVISION OF ENGINEERING

154 N DAMEN AVE - DAMEN GREEN LINE STATION

CODE COMPLIANCE DATA

CDOT PROJECT D-7-135 | DATE: 01/27/2020

SPEC. NO.

DRAWING NO. **G40-00**

REVISION NO.

ASME A17.1 Safety Code for Elevators and Escalators - Part 2				
ITEM	ISSUE	CHAPTER	Requirement	Actual
Section 2.1 Construction of Hoistways and Hoistway Enclosures				
	Non-Fire-Resistive Construction	2.1.1.2	Where fire-resistive construction is not required by the building code, hoistway construction shall conform to 2.1.1.2.2 or 2.1.1.3.	Hoistway construction is fully enclosed.
		2.1.1.2.2	The hoistway shall be fully enclosed conforming to 2.1.1.2.2 a, b, e. Enclosures and doors shall be unperforated to a height of 79 in. above each floor or landing. Partitions between hoistways and machine rooms shall be of solid construction. Enclosures shall be permitted to be glass, provided it is laminated glass conforming to ANSI Z97.1, 16 CFR Part 1201 or CAN/CGSB-12.1, whichever is applicable.	The hoistway enclosure is unperforated. The partitions between the hoistway and machine room are of solid construction. The hoistway glass shall be laminated.
	Construction at Bottom of Hoistway	2.1.2.2	Pits extending to the ground shall have noncombustible floors, and shall be designed to prevent entry of ground water into the pit. The pit floor of any hoistway not extending to the ground shall be of construction having a fire-resistance rating at least equal to that required for the hoistway enclosure.	Elevator 01 pit is concrete and waterproofed to prevent entry of ground water. Elevator 02 pit is raised above grade and has a fire-resistance rating equal to the hoistway.
	Floor Over Hoistways General Requirements	2.1.3.1.1	A metal or concrete floor shall be provided at the top of the hoistway where a machine room or control room is located above the hoistway.	A concrete floor is provided at each machine room floor.
	Control of Smoke and Hot Gases	2.1.4	When required by the building code, hoistways shall be provided with means to prevent the accumulation of smoke and hot gases.	
	Projections, Recesses, and Setbacks in Hoistway Enclosures	2.1.6 2.1.6.2	Hoistway enclosures shall have flush surfaces on the hoistway side. Beams, floor slabs, or other building construction making an angle less than 75 deg with the horizontal shall not project more than 4" inside the hoistway enclosure unless the top surface of the projection is beveled at an angle not less than 75 deg with the horizontal.	Bevels shall be provided at all horizontal structural members within the hoistway.
Section 2.2 Pits				
	Design and Construction of Pits	2.2.2.3 2.2.2.4 2.2.2.5	Permanent provisions shall be made to prevent accumulation of ground water in the pit. Drains and sump pumps, where provided, shall comply with the applicable plumbing code, and they shall be provided with a positive means to prevent water, gases, and odors from entering the hoistway. In elevators provided with Firefighters' Emergency Operation, a drain or sump pump shall be provided. The sump pump/drain shall have the capacity to remove a minimum of 3,000 gal/h per elevator.	
	Pit Access	2.2.4.3	Pit access by ladder shall not be permitted when the pit floor is more than 120 in. below the sill of the access door, except where there is not building floor below the bottom terminal landing, this height shall be permitted to be greater but not more than 165 in.	Elevator pits are less than 120 in. deep.
	Stop Switch in Pits	2.2.6.2	In elevators where access to the pit is through the lowest landing hoistway door, a stop switch shall be located approximately 18 in. above the floor level of the landing, within reach from this access floor and adjacent to the pit ladder. When the pit exceeds 67 in. in depth, an additional stop switch is required adjacent to the pit ladder and approximately 47 in. above the pit floor.	Elevator 02 pit exceeds 67 in. in depth and shall have an additional stop switch.
Section 2.4 Vertical Clearances and Runbys for Cars and Counterweights				
	Refuge Space on Top of Car Enclosure	2.4.12	An unobstructed horizontal area of not less than 5.4 sf shall be provided on top of the car enclosure for refuge space. It shall measure not less than 24 in. on any side. This area shall be permitted to include the space utilitzed for the top emergency exit.	Refuge space on top of the elevator cars shall be provided.
Section 2.5 Horizontal Car and Counterweight Clearances				
	Between Car and Hoistway Enclosures	2.5.1.1	The clearance between the car and the hoistway enclosure shall be not less than 0.8 in., except on the sides used for loading and unloading.	The distance between the car and hoistway is greater than 0.8 in.
	Between Car and Counterweight and Counterweight Guard	2.5.1.2	The clearance between the car and the counterweight shall be not less than 1 in. The clearance between the car and the counterweight guard, counterweight and the counterweight guard, and the between the counterweight and the hoistway enclosure shall be not less than 0.8 in.	Clerances shall not be less than 1 in.
	Clearance Between Car and Landing Sills	2.5.1.4	The clearance between the car platform sill and the hoistway edge of any landing sill shall be not less than 0.5 in. for all elevators except freight elevators. The maximum clearance shall be not more than 1.25 in.	Clearance shall be between 0.5 in. and 1.25 in.
	Clearance Between Loading Side of Car Platforms and Hoistway Enclosures	2.5.1.5	The clearance between the edge of the car platform sill and the hoistway enclosure or fascia plate for the full width of the clear hoistway door opening shall be not more than 7.5 in. for vertically sliding doors and 5 in. for other doors.	Clerance shall be less than 5 in.
Section 2.6 Protection of Space Below Hoistways				
	Protection of Space Below Hoistways Where the Space Is Underneath the Counterweight and/or Its	2.6.1	Where there is space that can be accessed underneath the counterweight and/or its guides the counterweight shall be provided with a counterweight safety conforming to 2.17.4.	A counterweight safety shall be provided at Elevator 02.
Section 2.7 Machinery Spaces, Machine Rooms, Control Spaces, and Control Rooms				
	Non-Fire-Resistive Construction	2.7.1.2.1	Enclosures of the rooms shall be enclosed with noncombustible material to a height of not less than 79 in.	Machine and control rooms will be enclosed with noncombustible materials.
	Maintenance Path and Clearance In Machine Rooms and Control Rooms	2.7.2.1 2.7.2.3	A clear path of not less than 18 in. shall be provided to all components that require maintenance. A clearance of not less than 18" shall be provided in the direction required for maintenance access.	An 18" maintenance path and 18" clearance shall be provided.
	Access to Machine Rooms and Control Rooms	2.7.3.1.1	A permanent and unobstructed means of access shall be provided.	A permanent and unobstructed means of access shall be provided.
	Means of Access	2.7.3.3.2	A permanent, noncombustible stair shall be provided where the floor of the room or the space above or below the floor or roof from which the means of access leads, or where the distance between floor levels in the room or space is 35 in. or more. Vertical ladders with handgrips shall be permitted to be used in lieu of stairs for access to overhead machinery spaces, except those containing controllers and motor generators.	For Elevator 01, ladder access is provided in lieu of a stair as the controller is not located in the machine room. The controller is located in a separate control room. For Elevator 02, a permanent, noncombustible stair is provided.
		2.7.3.3.3	Permanent, fixed, noncombustible ladders shall conform to ANSI A14.3.	The ladders shall conform to ANSI A14.3.
		2.7.3.3.4	Permanent, noncombustible stairs shall have a maximum angle of 60 deg from the horizontal, and shall be equipped with a noncombustible railing conforming to 2.10.2.1-2.10.2.3.	For Elevator 02, a permanent, noncombustible, 60 deg stair with handrails conforming to 2.10.2.1-2.10.2.3 shall be provided.
		2.7.3.3.5	A permanent , noncombustible platform or floor shall be provided at the top of the stairs with noncombustible railings. The size of the platform shall be sufficient to permit the full swing of the door plus 24 in. from the top of the riser to the swing line of the door. The floor of the platform shall be at the level of not more than 8 in. below the level of the access-door sill. Where the door swings inward, the width of the platform shall be not less than 29.5 in. and the tenght not less than the width of the door.	A platform is provided with 24 in. clearance from the swing of the door.
	Access Doors and Openings	2.7.3.4.1	Access doors shall be self-closing and self-locking, provided with a spring-type lock arranged to permit the doors to be opened from the inside without a key, kept closed and locked.	Access doors shall be self-closing, self-locking, provided with a spring-type lock arranged to permit the doors to be opened from the inside without a key, kept closed and locked.
		2.7.3.4.2	Access to doors to machine rooms and control rooms shall be provided. They shall be of a minimum width of 29.5 in. and a minimum height of 80 in.	Doors shall meet these requirements.
		2.7.3.4.4	Access doors for control spaces outside the hoistway shall be a minimum width and height of 29.5 in.	
	Headroom in Machinery Spaces, Machine Rooms, Control Spaces, and Control Rooms	2.7.4.1	Elevator machine rooms and control rooms shall have a clear headroom of not less than 84 in.	The machine rooms and control rooms shall have a clear headroom of 84 in. or greater.
		2.7.4.6	Control spaces outside the hoistway intended for full bodily entry shall have a clear headroom of not less than 78 in. or the height of the equipment, whichever is greater.	The control room shall have a clear headroom of 78 in. or greater.
	Location of Machinery Spaces, Machine Rooms, Control Spaces, Control Rooms, and Equipment	2.7.6.3.1	The electric driving machine shall be located in the machinery space or machine room.	The electric driving machines shall be located in the machine rooms.
		2.7.6.3.2	The motor controller shall be located in a machinery space, machine room, control space, or control room. A motor controller shall be permitted to be located outside the specified spaces, provided it is enclosed in a locked cabinet. The locked cabinet shall be 1) readily accessible for maintenance and inspection, 2) provided with doors or panels that are not self-closing, are self-locking, and shall be kept closed and locked, 3) lit by permanently installed electric lighting of at least 19 fc at the floor, and 4) located in a space that is provided with natural or mechanical means to keep the ambient air temperature and humidity in the range specified by the manufacturer.	The controller for Elevator 01 is located in a control room. The controller for Elevator 02 is located in the machine room.
	Remote Machine Rooms and Control Rooms	2.7.8.4	A permanent means of communication between the elevator car and remote machine room and/or control room shall be provided.	A permanent means of communication shall be provided .
Section 2.8 Equipment in Hoistways, Machinery Spaces, Machine Rooms, Control Spaces, and Control Rooms				
	Electrical Heaters	2.8.4	Listed/certified electrical heaters shall be permitted.	
	Air Conditioning	2.8.5	Air conditioning equipment is permitted to be installed in machinery spaces, machine rooms, control spaces, or control rooms for the purpose of cooling these areas only. Air conditioning equipment shall not be loctaed directly above elevator equipment. Clear headroom under suspended air conditioning equipment shall conform to 2.7.4. Means shall be provided to collect and drain condensation water from these spaces and shall not be over elevator equipment. Drains connected directly to sewers shall not be installed. Equipment shall be located for safe and convenient access. There shall be no exposed gears, sprockets, belts, pulleys, or chains.	Air conditioning equipment is provided as permitted.
Section 2.11 Protection of Hoistway Openings				
	Hoistway Landing Entrances	2.11.1.1	Entrances shall be at least 80 in. in height and 31.5 in. in width.	Entrances are 31.5 in. x 80 in. or larger.
	Location of Horizontally Sliding or Swinging Hoistway Doors	2.11.4	The distance from the hoistway face of the doors to the edge of the hoistway landing sill, measured from the face of the door section nearest to the car, shall be not more than than 4 in.	Dimension shall not be more than 4 in.
	Glass Doors	2.11.7.2.1 2.11.7.2.2	The glass shall be laminated glass conforming to 16 CFR Part 1201. The glass shall be not less than 60% of the total visible door panel surface area as seen from the landing side of the doors.	Glass doors shall conform to requirements.
Section 2.14 Car Enclosures, Car Doors and Gates, and Car Illumination				
	Top Emergency Exits	2.14.1.5	An emergency exit with a cover shall be provided in the top of all elevator cars, except cars in partially enclosed hoistways.	Emergency exit shall be provided.
	Railing and Equipment on Top of Cars	2.14.1.7.1	A standard railing conforming to 2.10.2 shall be provided on the outside perimeter of the car top on all sides where the perpendicular distance between the edges of the car top and the adjacent hoistway enclosure exceeds 12 in. horizontal clearance.	Perimeter railing shall be provided on top of both elevator cars.
	Glass in Elevator Cars	2.14.1.8	Where enclosures include panels of glass, the panels shall be constructed of laminated glass, be provided with a handrail or framing designed to guard the opening should the panel become detached, where wall panels are wider than 12 in.	Glass in elevator cars shall conform to requirements.
	Ventilation	2.14.2.3	The total area of natural ventilation openings shall be not less than 3.5% of the inside car floor area divided equally between the bottom and top of the car enclosure.	Natural ventilation shall conform to requirements.
	Headroom in Elevator Cars	2.14.2.4	A minimum clear headroom of 80 in. above the car floor shall be provided.	Minimum clear headroom shall be greater than 80 in.
	Location	2.14.4.4.5	The distance from the face of the car door to the face of the hoistway door shall be not more than 5.5 in. where a sliding-type hoistway door and a car door are used.	Dimension shall not be more than 5.5 in.
	Glass in Car Doors	2.14.5.8.2	Glass doors shall be laminated glass and shall not be less than 60% of the total visible door panel surface area as seen from the car side of the doors.	Glass in elevator car doors shall conform to requirements.
Section 2.17 Car and Counterweight Safeties				
	Governor-Actuated Safeties and Car Safety Mechanism Switches Required	2.17.7.1	Counterweight safeties, where provided for rated speeds over 150 fpm, and car safeties, shall be actuated by separate speed governors.	
		2.17.7.2	Every car safety shall be provided with a switch, operated by the car safety mechanism. A switch operated by the safety mechanism is not required on counterweighted safeties.	

DESIGN BY:									
DRAWN BY:									
CHECKED BY:									
APPROVED BY:			01/27/2020	ISSUE FOR BID	BS	AS	JH		
CDOT/APPROVED BY:		NO.	DATE	REVISIONS	DES.	DRW.	CHK.	DCCO	CDOT

PERKINS+WILL
The Wrigley Building
410 North Michigan Ave.
Suite 1600
Chicago, IL 60611
t 312.755.0770
f 312.755.0775
www.perkinswill.com

CDOT
CHICAGO DEPARTMENT OF TRANSPORTATION
DIVISION OF ENGINEERING

154 N DAMEN AVE - DAMEN GREEN LINE STATION

CODE COMPLIANCE DATA - ELEVATORS

CDOT PROJECT D-7-135

DATE: 01/27/2020

SPEC. NO.

DRAWING NO. **G40-01**

REVISION NO.

EXIT STAIR NW: EXITS DIRECTLY TO GRADE

STAIR WIDTH = 66" OF 208" REQUIRED
= 66" X 1.41 P./IN./MIN. = 93 PPM MAY EGRESS

DOOR WIDTH = (2) 33" DOOR LEAFS
= (2) X 2.08 PPM/IN. X 33" = 137 PPM MAY EGRESS

= 93 PPM THIS EXIT

EXIT STAIR NORTH TOWER: EXITS THROUGH STATION

STAIR WIDTH = 80" OF 208" REQUIRED
= 80" X 1.41 P./IN./MIN. **= 112 PPM MAY EGRESS**

208" STAIR WIDTH REQURIED THIS SIDE OF PLATFORM
- 66" FROM EXIT STAIR NW - 66" FROM EXIT STAIR NE = 76" STAIR WIDTH REQUIRED
80" STAIR WIDTH > 76" STAIR WIDTH REQUIRED

76" X 1.41 P./IN./MIN. = 107 PPM REQUIRED THIS EXIT
112 PPM THIS EXIT > 107 PPM REQUIRED

STEP 1: POINT OF SAFETY (POS) TIMED EGRESS CALCULATION
LOCATION OF THE MOST REMOTE OCCUPANT TO EGRESS FROM PLATFORM WITHIN 6 MIN. (SEE CALCULATION ON G40-00.)

EXIT STAIR NE: EXITS DIRECTLY TO GRADE

STAIR WIDTH = 66" OF 208" REQUIRED
= 66" X 1.41 P./IN./MIN. = 93 PPM MAY EGRESS

DOOR WIDTH = (2) 33" DOOR LEAFS
= (2) X 2.08 PPM/IN. X 33" = 137 PPM MAY EGRESS

= 93 PPM THIS EXIT

EXIT STAIR SW: EXITS DIRECTLY TO GRADE

STAIR WIDTH = 62" OF 208" REQUIRED
= 62" X 1.41 P./IN./MIN. = 87 PPM MAY EGRESS

DOOR WIDTH = (2) 33" DOOR LEAFS
= (2) X 2.08 PPM/IN. X 33" = 137 PPM MAY EGRESS

= 87 PPM THIS EXIT

EXIT STAIR STATION: EXITS THROUGH STATION

STAIR WIDTH = 207"
207" X 1.41 P./IN./MIN. = 291 PPM MAY EGRESS THIS STAIR

293 PPM REQUIRED TO EXIT SOUTH/INBOUND SIDE OF PLATFORM
- 87 PPM FROM EXIT STAIR SW
- 93 PPM FROM EXIT STAIR SE
113 PPM REQUIRED TO EXIT THIS STAIR FROM SOUTH/INBOUND SIDE OF PLATFORM

113 PPM / 141 P./IN./MIN. = 80" STAIR WIDTH REQUIRED FOR SOUTH/INBOUND SIDE OF PLATFORM

CONSIDERATION OF EXIT STAIR NORTH TOWER EXITING THIS STAIR:
80" STAIR WIDTH (113 PPM) REQUIRED FROM EXIT STAIR STATION +
76" STAIR WIDTH (107 PPM) REQUIRED FROM EXIT STAIR NORTH TOWER
156" STAIR WIDTH (220 PPM) REQUIRED FROM EXIT STAIR STATION TOTAL

207" STAIR WIDTH PROVIDED > 156" STAIR WIDTH REQUIRED
291 PPM ABLE TO EXIT THIS STAIR > 220 PPM REQUIRED TO EXIT THIS STAIR

DOOR WIDTH = (3) X (2) 36" DOOR LEAFS
= (3) X (2) X 2.08 PPM/IN. X 36" = 449 PPM MAY EGRESS

449 PPM ABLE TO EGRESS THROUGH DOORS > 220 PPM REQUIRED TO EGRESS

EXIT STAIR BRIDGE: EXITS THROUGH STATION

STAIR WIDTH = 108" > 76" REQUIRED FROM NORTH/OUTBOUND PLATFORM

STEP 4: POS TIMED EGRESS CALCULATION
(SEE CALCULATION ON G40-00.)

STEP 5 +6: POS TIMED EGRESS CALCULATION
(SEE CALCULATION ON G40-00.)

STEP 2: POS TIMED EGRESS CALCULATION
(SEE CALCULATION ON G40-00.)

STEP 3: POS TIMED EGRESS CALCULATION
(SEE CALCULATION ON G40-00.)

STEP 7: POS TIMED EGRESS CALCULATION
THIS LOCATION IS CONSIDERED TO BE THE POINT OF SAFETY
(SEE CALCULATION ON G40-00.)

MAIN ENTRANCE:

A - 60 PPM + B - 141 PPM =
201 PPM REQUIRED TO EGRESS THROUGH MAIN ENTRANCE

(2) X (2) 36" DOOR LEAFS
(2) X (2) X 2.08 PPM/IN. X 36" =
299 PPM > 201 PPM REQUIRED

NOTE: ALL SERVICE SPACES ARE SEPARATED FROM THE OPEN AIR ASSEMBLY SPACES BY A 1 HR RATED ENCLOSURE AT WALLS AND CEILING. ADDITIONAL 2 HR RATING IS PROVIDED WHERE REQUIRED.

LEVEL 01 EGRESS SUMMARY:

220 PPM EGRESSING AT LEVEL 01

A - SINGLE LEAF DOOR ALLOWS 60 PPM
60 PPM EXIT THROUGH 48" DOOR

B - (2) 34" DOOR LEAFS
(2) X 2.08 PPM/IN. X 34" = 141 PPM

C - (2) 34" DOOR LEAFS
(2) X 2.08 PPM/IN. X 34" = 141 PPM

60 PPM + 141 PPM + 141 PPM =
342 PPM > 220 PPM REQUIRED

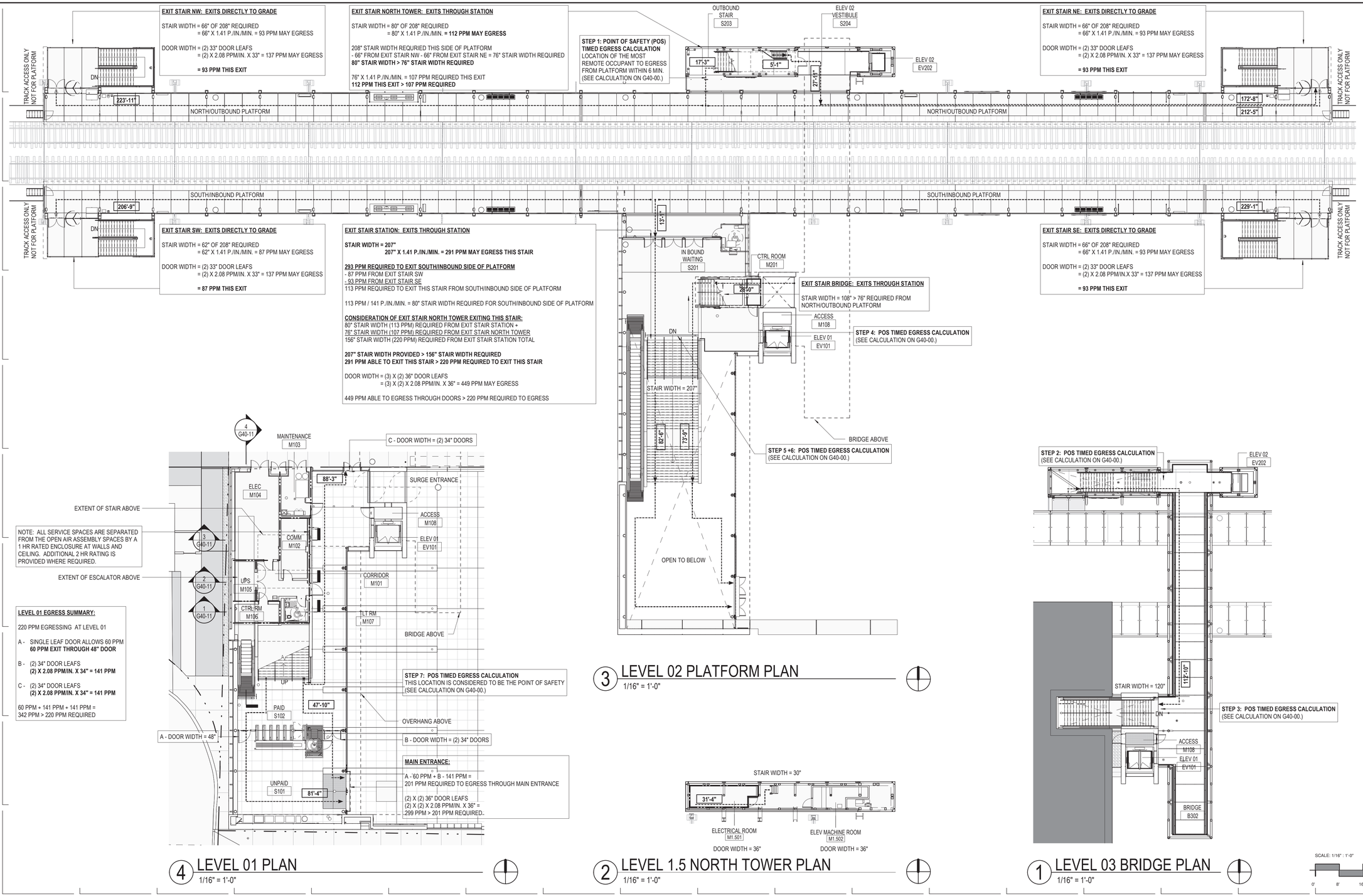

4 LEVEL 01 PLAN
1/16" = 1'-0"

3 LEVEL 02 PLATFORM PLAN
1/16" = 1'-0"

2 LEVEL 1.5 NORTH TOWER PLAN
1/16" = 1'-0"

1 LEVEL 03 BRIDGE PLAN
1/16" = 1'-0"

SCALE: 1/16" : 1'-0"

CODE COMPLIANCE LEGEND

PARTITION RATINGS DESIGNATIONS

- 2HR — 2-HOUR FIRE RESISTANT SEPARATION
- 1HR — 1-HOUR FIRE RESISTANT SEPARATION
- NON RATED

PATH OF TRAVEL

PLATFORM EGRESS NOTES

FOR THE PURPOSE OF SIZING THE PLATFORM EMERGENCY EGRESS CAPACITY, THE FOLLOWING WILL BE USED:

IN ACCORDANCE WITH NFPA 130 SECTION 5.3.2.3(1), EACH PLATFORM WILL BE SIZED USING AN OCCUPANT LOAD OF **1,172 OCCUPANTS**. REFERENCE TABLES ON G40-00 FOR OCCUPANT LOAD CALCULATIONS.

THE TOTAL REQUIRED WIDTH FOR EACH PLATFORM IS AS FOLLOWS:

1. REQUIRED TOTAL EGRESS CAPACITY:
1,172 OCCUPANTS / 4 MINUTES = **293 PPM**
(PPM = PEOPLE PER MIN.)

2. TOTAL STAIR WIDTH:
293 PPM/1.41 P/IN/MIN. = **208 IN.**

3. TOTAL DOOR WIDTH:
DOUBLE LEAF DOOR: **2.08 PPM/IN. OF WIDTH**

IN ACCORDANCE WITH NFPA 130 SECTION 5.3.3, THE LOCATION OF THE MEANS OF EGRESS FOR EACH PLATFORM IS AS FOLLOWS:

1. TWO MEANS OF EGRESS, REMOTE FROM EACH OTHER SHALL BE PROVIDED.

2. MAXIMUM TRAVEL DISTANCE SHALL BE NO LONGER THAN 325 FT. TO A MEANS OF EGRESS.

NORTH/OUTBOUND PLATFORM EGRESS CALCULATION:

93 PPM (NW STAIR) +
112 PPM (NORTH TOWER STAIR) +
93 PPM (NE STAIR) = 298 PPM
298 PPM > 293 PPM REQUIRED

SOUTH/INBOUND PLATFORM EGRESS CALCULATION:

87 PPM (SW STAIR) +
184 PPM (STATION STAIR) +
93 PPM (SE STAIR) = 364 PPM
364 PPM > 293 PPM REQUIRED

NOTE: 184 PPM CALCULATED BY:
291 PPM CAPACITY OF EXIT STAIR STATION -
107 PPM REQUIRED FROM EXIT STAIR N. TOWER
= 184 PPM POSSIBLE FROM THIS STAIR.

STATION L01 EGRESS CALCULATION:
107 OCCUPANTS FROM NORTH/OUTBOUND PLATFORM + 113 OCCUPANTS FROM SOUTH/INBOUND PLATFORM = 220 OCCUPANTS

SEE LEVEL 01 PLAN FOR OCCUPANT AND DOOR WIDTH CALCULATION.

DESIGN BY:									
DRAWN BY:									
CHECKED BY:									
APPROVED BY:			01/27/2020	ISSUE FOR BID	BS	AS	JH		
CDOT/APPROVED BY:		NO.	DATE	REVISIONS	DES.	DRW.	CHK.	DCCO	CDOT

PERKINS+WILL
The Wrigley Building
410 North Michigan Ave.
Suite 1600
Chicago, IL 60611
t 312.755.0770
f 312.755.0775
www.perkinswill.com

CDOT
CHICAGO DEPARTMENT OF TRANSPORTATION
DIVISION OF ENGINEERING

154 N DAMEN AVE - DAMEN GREEN LINE STATION

CODE COMPLIANCE PLANS

CDOT PROJECT D-7-135

DATE: 01/27/2020

SPEC. NO.

DRAWING NO.
G40-10

REVISION NO.

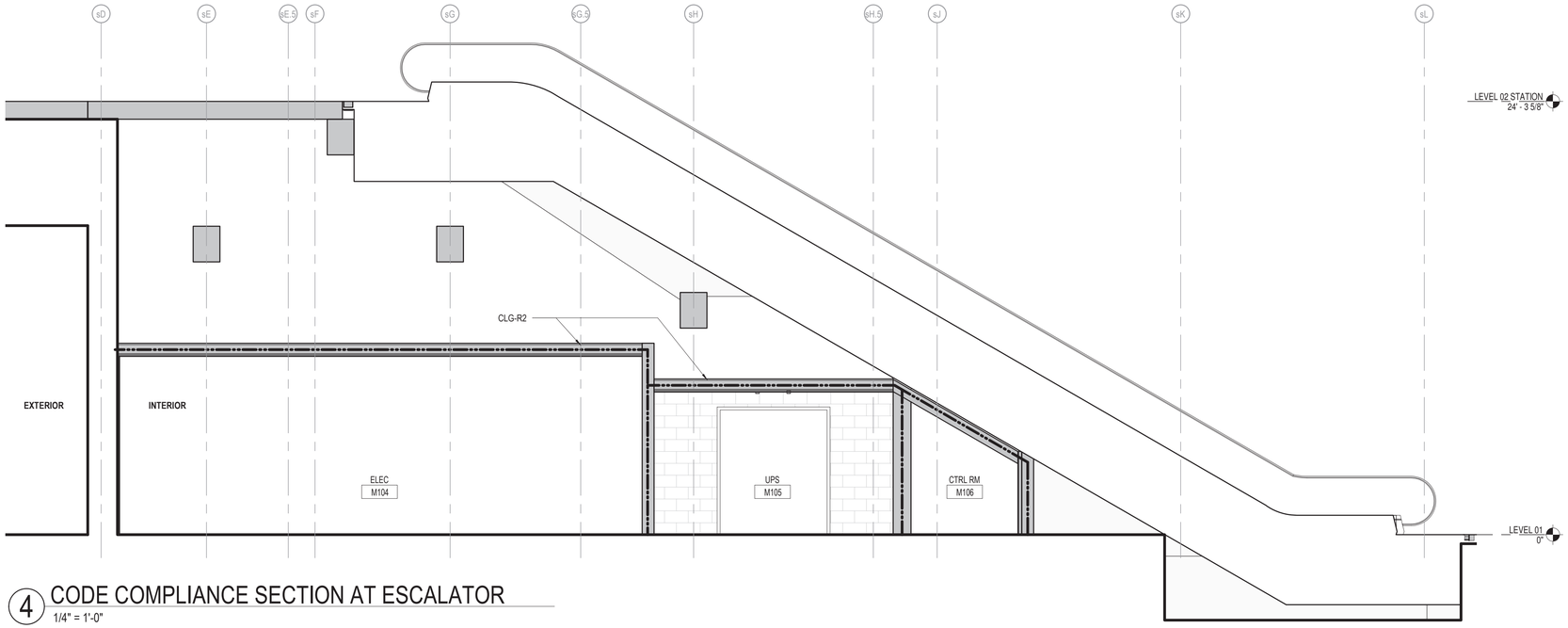

4 CODE COMPLIANCE SECTION AT ESCALATOR
1/4" = 1'-0"

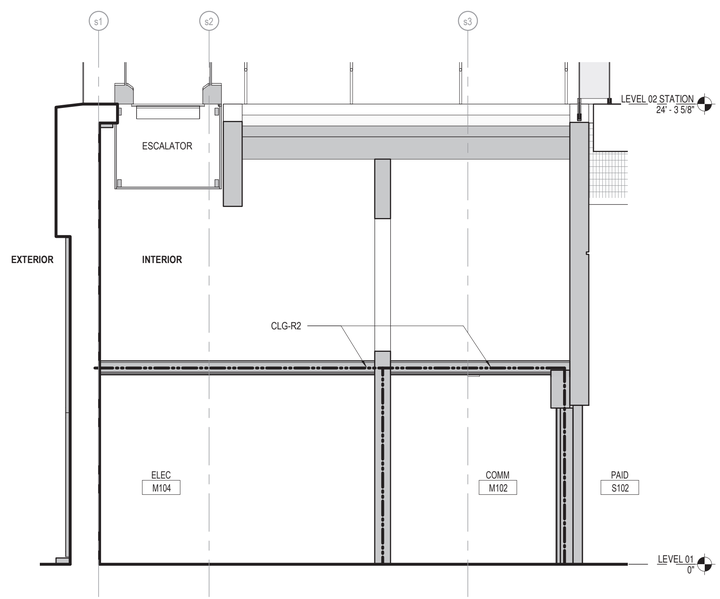

3 CODE COMPLIANCE SECTION - STATION
1/4" = 1'-0"

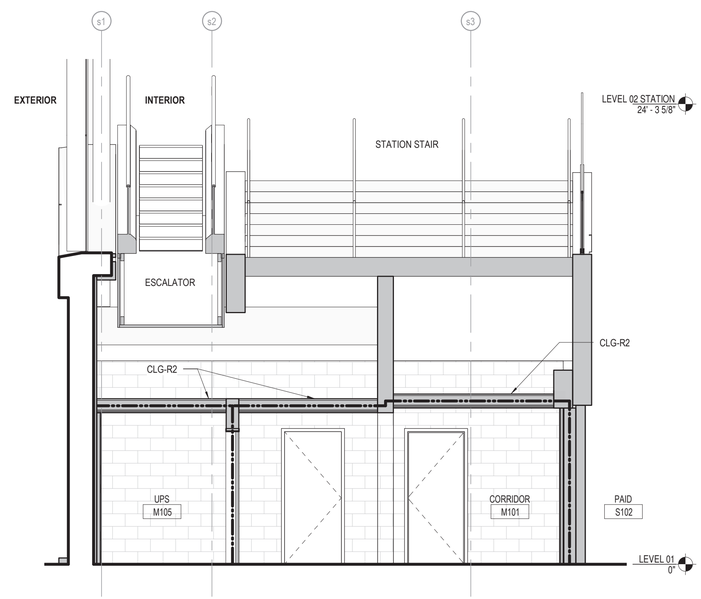

2 CODE COMPLIANCE SECTION - STATION
1/4" = 1'-0"

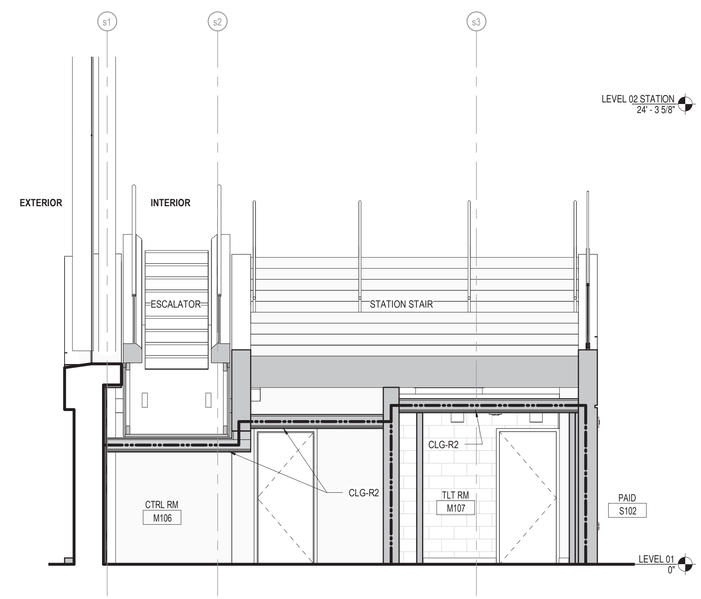

1 CODE COMPLIANCE SECTION - STATION
1/4" = 1'-0"

CODE COMPLIANCE LEGEND

PARTITION RATINGS DESIGNATIONS

2HR	2-HOUR FIRE RESISTANT SEPARATION
1HR	1-HOUR FIRE RESISTANT SEPARATION
	NON RATED

CODE COMPLIANCE NOTES

1. REFER TO A62-50 FOR WALL AND CEILING ASSEMBLY INFORMATION.

SCALE: 1/4" : 1'-0"
0' 2' 4' 8' 16'

DESIGN BY:									
DRAWN BY:									
CHECKED BY:									
APPROVED BY:			01/27/2020	ISSUE FOR BID	BS	AS	JH		
CDOT/APPROVED BY:		NO.	DATE	REVISIONS	DES.	DRW.	CHK.	DCCO	CDOT

PERKINS+WILL
The Wrigley Building
410 North Michigan Ave.
Suite 1600
Chicago, IL 60611
t 312.755.0770
f 312.755.0775
www.perkinswill.com

CDOT
CHICAGO DEPARTMENT OF TRANSPORTATION
DIVISION OF ENGINEERING

154 N DAMEN AVE - DAMEN GREEN LINE STATION

CODE COMPLIANCE SECTIONS

CDOT PROJECT D-7-135

DATE: 01/27/2020

SPEC. NO.

DRAWING NO.
G40-11

REVISION NO.

CITY OF CHICAGO
DEPARTMENT OF
BUILDINGS

Changemarks Report

Report Generated: 08/14/2019 07:50 AM

Group(s)	Cycle	Ref #	Department	Snapshot	File	Markup Name	Changemark Subject	Changemark Details	Markup Date	Updated By	Applicant Response
Main Workflow	1	305	Zoning		A20-05A EXTERIOR ELEVATIONS OUTBOUND PLATFORM NORTH D19024-01.pdf	ZONING	ZX0001	ZX0001 SEE STAN ADAMS FOR PROJECT EXTENTS ABOVE, BRIDGE, CANOPIES, ETC IN THE PUBLIC WAY. DEPT OF BUSINESS AFFAIRS AND CONSUMER PROTECTION ROOM 800. (312) 744-1970.	08/12/2019 12:11 PM	Jose Gaeta	Construction in the public way has been resolved with Department of Business Affairs and Consumer Protection.
		304	Zoning		A20-04 EXTERIOR ELEVATIONS WEST D19024-01.pdf	ZONING	ZX0001	ZX0001 SEE STAN ADAMS FOR PROJECT EXTENTS ABOVE, BRIDGE, CANOPIES, ETC IN THE PUBLIC WAY. DEPT OF BUSINESS AFFAIRS AND CONSUMER PROTECTION ROOM 800. (312) 744-1970.	08/12/2019 12:09 PM	Jose Gaeta	Construction in the public way has been resolved with Department of Business Affairs and Consumer Protection.
		303	Zoning		A20-02 EXTERIOR ELEVATIONS EAST D19024-01.pdf	ZONING	ZX0001	ZX0001 SEE STAN ADAMS FOR PROJECT EXTENTS ABOVE, BRIDGE, CANOPIES, ETC IN THE PUBLIC WAY. DEPT OF BUSINESS AFFAIRS AND CONSUMER PROTECTION ROOM 800. (312) 744-1970.	08/12/2019 12:06 PM	Jose Gaeta	Construction in the public way has been resolved with Department of Business Affairs and Consumer Protection.
		302	Zoning		A11-13 TOWER_BRIDGE ENLARGED LEVEL 03 PLAN D19024-01.pdf	ZONING	ZX0001	ZX0001 SEE STAN ADAMS FOR BRIDGE IN THE PUBLIC WAY. DEPT OF BUSINESS AFFAIRS AND CONSUMER PROTECTION ROOM 800. (312) 744-1970.	08/12/2019 11:46 AM	Jose Gaeta	Construction in the public way has been resolved with Department of Business Affairs and Consumer Protection.
		301	Zoning		A11-01 STATION ENLARGED LEVEL 01 PLAN D19024-01.pdf	ZONING	ZX0001	ZX0001 SEE STAN ADAMS FOR DOORS SWINGING INTO PUBLIC WAY. DEPT OF BUSINESS AFFAIRS AND CONSUMER PROTECTION ROOM 800. (312) 744-1970.	08/12/2019 11:40 AM	Jose Gaeta	Construction in the public way has been resolved with Department of Business Affairs and Consumer Protection.
		300	Zoning		A11-01 STATION ENLARGED LEVEL 01 PLAN D19024-01.pdf	ZONING	ZX0001	ZX0001 SEE STAN ADAMS FOR BRIDGE IN THE PUBLIC WAY. DEPT OF BUSINESS AFFAIRS AND CONSUMER PROTECTION ROOM 800. (312) 744-1970.	08/12/2019 11:40 AM	Jose Gaeta	Construction in the public way has been resolved with Department of Business Affairs and Consumer Protection.
		298	Zoning		A11-00 ARCHITECTURAL SITE PLAN D19024_01.pdf	ZONING	ZLR2166	ZLR2166 19-108: Application Information: Landscaping Review Did Not Pass: OK to enter Department of Buildings process.. LANDSCAPE REVIEW AND APPROVAL REQUIRED.	08/12/2019 11:38 AM	Jose Gaeta	Landscape review comments have been addressed.
		299	Zoning		A11-00 ARCHITECTURAL SITE PLAN D19024_01.pdf	ZONING	ZX0001	ZX0001 SEE STAN ADAMS FOR DOORS SWINGING INTO PUBLIC WAY. DEPT OF BUSINESS AFFAIRS AND CONSUMER PROTECTION ROOM 800. (312) 744-1970.	08/12/2019 11:38 AM	Jose Gaeta	Construction in the public way has been resolved with Department of Business Affairs and Consumer Protection.
		297	Zoning		L10-00 LANSCAPE PLAN D19024-01.pdf	ZONING	ZX0001	ZX0001 SEE STAN ADAMS FOR DOORS SWINGING INTO PUBLIC WAY. DEPT OF BUSINESS AFFAIRS AND CONSUMER PROTECTION ROOM 800. (312) 744-1970.	08/12/2019 11:32 AM	Jose Gaeta	Construction in the public way has been resolved with Department of Business Affairs and Consumer Protection.
		296	Zoning		L10-00 LANSCAPE PLAN D19024-01.pdf	ZONING	ZX0001	ZX0001 PROVIDE VACATED ALLEY DOCUMENT NUMBER.	08/12/2019 11:32 AM	Jose Gaeta	The alley is not being vacated as part of this project.
		294	Zoning		A10-04 OVERALL ROOF PLAN D19024-01.pdf	ZONING	ZX0001	ZX0001 REMOVE FUTURE BUILDING NOT IN CONTRACT COMPLETELY.	08/12/2019 11:40 AM	Jose Gaeta	Future building not in contract has been removed from the drawing.
		295	Zoning		A10-04 OVERALL ROOF PLAN D19024-01.pdf	ZONING	ZX0001	ZX0001 SEE STAN ADAMS FOR BRIDGE IN THE PUBLIC WAY. DEPT OF BUSINESS AFFAIRS AND CONSUMER PROTECTION ROOM 800. (312) 744-1970.	08/12/2019 11:40 AM	Jose Gaeta	Construction in the public way has been resolved with Department of Business Affairs and Consumer Protection.
		293	Zoning		A10-01 OVERALL LEVEL 01 PLAN D19024-01.pdf	ZONING	ZX0001	ZX0001 SEE STAN ADAMS FOR PROJECT EXTENTS ABOVE IN THE PUBLIC WAY. DEPT OF BUSINESS AFFAIRS AND CONSUMER PROTECTION ROOM 800. (312) 744-1970.	08/12/2019 12:03 PM	Jose Gaeta	Construction in the public way has been resolved with Department of Business Affairs and Consumer Protection.
		290	Zoning		A10-01 OVERALL LEVEL 01 PLAN D19024-01.pdf	ZONING	ZX0001	ZX0001 REMOVE FUTURE BUILDING NOT IN CONTRACT COMPLETELY.	08/12/2019 12:03 PM	Jose Gaeta	Future building not in contract has been removed from the drawing.
		291	Zoning		A10-01 OVERALL LEVEL 01 PLAN D19024-01.pdf	ZONING	ZX0001	ZX0001 SEE STAN ADAMS FOR PEDESTRIAN PROTECTION CANOPIES IN THE PUBLIC WAY. DEPT OF BUSINESS AFFAIRS AND CONSUMER PROTECTION ROOM 800. (312) 744-1970.	08/12/2019 12:03 PM	Jose Gaeta	Construction in the public way has been resolved with Department of Business Affairs and Consumer Protection.
		289	Zoning		A10-01 OVERALL LEVEL 01 PLAN D19024-01.pdf	ZONING	ZX0001	ZX0001 SEE STAN ADAMS FOR DOORS SWINGING INTO PUBLIC WAY. DEPT OF BUSINESS AFFAIRS AND CONSUMER PROTECTION ROOM 800. (312) 744-1970.	08/12/2019 12:03 PM	Jose Gaeta	Construction in the public way has been resolved with Department of Business Affairs and Consumer Protection.
		292	Zoning		A10-01 OVERALL LEVEL 01 PLAN D19024-01.pdf	ZONING	ZX0001	ZX0001 SEE STAN ADAMS FOR BRIDGE IN THE PUBLIC WAY. DEPT OF BUSINESS AFFAIRS AND CONSUMER PROTECTION ROOM 800. (312) 744-1970.	08/12/2019 12:03 PM	Jose Gaeta	Construction in the public way has been resolved with Department of Business Affairs and Consumer Protection.
		288	Zoning		A10-02 OVERALL LEVEL 02 PLATFORM PLAN D19024-01.pdf	ZONING	ZX0001	ZX0001 REMOVE FUTURE BUILDING NOT IN CONTRACT COMPLETELY.	08/12/2019 11:14 AM	Jose Gaeta	Future building not in contract has been removed from the drawing.
		287	Zoning		A10-03 OVERALL LEVEL 03 BRIDGE PLAN D19024-01.pdf	ZONING	ZX0001	ZX0001 SEE STAN ADAMS FOR BRIDGE IN THE PUBLIC WAY. DEPT OF BUSINESS AFFAIRS AND CONSUMER PROTECTION ROOM 800. (312) 744-1970.	08/12/2019 11:28 AM	Jose Gaeta	Construction in the public way has been resolved with Department of Business Affairs and Consumer Protection.
		286	Zoning		A10-03 OVERALL LEVEL 03 BRIDGE PLAN D19024-01.pdf	ZONING	ZX0001	ZX0001 REMOVE FUTURE BUILDING NOT IN CONTRACT COMPLETELY.	08/12/2019 11:28 AM	Jose Gaeta	Future building not in contract has been removed from the drawing.
		283	Landscape		L10-00 LANSCAPE PLAN D19024-01.pdf	landscape	LN1110	LN1110 - SHOW LANDSCAPE STATEMENT ON EACH LANDSCAPE PLAN + make sure it is signed by the owner!	08/09/2019 2:47 PM	Leszek Ociepka	CDOT has indicated this project does not require the sworn statement, and the statement has been removed. Please see attached letter from CDOT, also included on G-series drawings.
		284	Landscape		L10-00 LANSCAPE PLAN D19024-01.pdf	landscape	LNM2279	LNM2279 - Miscellaneous-All zoning problems must be solved before the final landscape approval can be issued (see zoning corrections)	08/09/2019 2:47 PM	Leszek Ociepka	Zoning issues have been resolved.
		285	Landscape		L10-00 LANSCAPE PLAN D19024-01.pdf	landscape	LN1310	LN1310 - needs further review to get # for the landscape security deposit (or provide the landscape deposit waiver letter from CTA)	08/09/2019 2:47 PM	Leszek Ociepka	CDOT has indicated this project does not require the security deposit. Please see attached letter from CDOT, also included on G-series drawings.
		281	Landscape		L10-00 LANSCAPE PLAN D19024-01.pdf	landscape	LN1040	LN1040 - SHOW ALL PARKWAY FEATURES (light poles, fire hydrants, bus stops, parking meters, etc.)	08/09/2019 2:47 PM	Leszek Ociepka	All currently existing parkway features (lightpole/traffic signal, bus stop sign, structural columns) have been identified.
		282	Landscape		L10-00 LANSCAPE PLAN D19024-01.pdf	landscape	LN1050	LN1050 - SHOW PARKWAY TREES (existing and new) AND/OR PLANTER BOXES (existing and new). - revision needed, tree pits w/ iron grate supposed to be installed by the street curb, if there is any bus stop sign or shelter at that area (check on site) then 75' clerance required far side of the street intersection right of way/ property line - needs further review	08/09/2019 2:47 PM	Leszek Ociepka	Parkway trees are located away from street curb due to several water, electric, and telecommunication lines running in shallow depth adjacent to back-of-curb. Shown locations are the only feasible location within right-of-ways that avoid utility conflicts.
		279	Fire (Consultant)		G40-00 CODE COMPLIANCE DATA D19024-01.pdf	Fire-DK2	FX0001	FX0001 - Sheet G40-00: Line 3.05 of the code matrix notes 44" as minimum width of exits; Clarify minimum width of exit doors.	08/08/2019 11:07 AM	Dan Kohnen	The minimum width of exit doors has been added to the code matrix.
		278	Plumbing (Consultant)		P11-00 ENLARGED BELOW GRADE PLUMBING PLAN D19024-01.pdf	Plumbing Review 1	Changemark #01	PLC2306 - For cleanout requirements. (18-29-708) Provide cleanout. (Typical)	08/08/2019 10:36 AM	Hynek Dvorak	Cleanout locations have been reviewed and added as required.
		277	Plumbing (Consultant)		P10-00 OVERALL BELOW GRADE PLUMBING PLAN D19024-01.pdf	Plumbing Review 1	Changemark #01	PLR1354 - Roof Drainage 29 [18-29-1106.2]: Provide downspout of proper size 29. Provide square footage served. (Typical)	08/08/2019 10:23 AM	Hynek Dvorak	Square footage(s) have been added.
		276	Fire (Consultant)		A11-22B PLATFORM WEST ENLARGED LEVEL 02 PLAN D19024-01.pdf	Fire-DK	FX0001	FX0001 - Sheet A11-22B: Four pairs of doors (EX201-204) are described in the door schedule as "Egress Doors." Adjacent to these pairs of doors are one-way fire rated "Egress Doors." Clarify hardware on the 4 pairs of doors that not only ensures safe emergency egress, but also prevents unauthorized access from the exit stairs to the station platform.	08/08/2019 10:23 AM	Dan Kohnen	Hardware shall provide emergency egress. Security measures will be implemented at CTA direction.
		271	Fire (Consultant)		G40-11 CODE COMPLIANCE SECTIONS.pdf	Fire-DK	FX0001	FX0001 - Sheet G40-11: Code compliance sections indicate 2-hour rated horizontal & vertical fire separations at a number of locations on Level-01 of the station. Please reflect these protective measures in the Code Compliance matrix on sheet G40-00.	08/07/2019 4:45 PM	Dan Kohnen	The 2 HR rated horizontal and vertical separations have been noted in the code matrix.
		269	Fire (Consultant)		A31-03 NORTH TOWER ISOMETRICS FOR REFERENCE ONLY D19024-01.pdf	Fire-DK	FX0001	FX0001 - Sheet A31-13: File name for this sheet needs to be corrected (name currently refers to A31-03 instead of A31-13).	08/07/2019 3:35 PM	Dan Kohnen	The file name for this sheet has been corrected.
		264	Fire (Consultant)		A11-02 STATION ENLARGED LEVEL 02 PLAN D19024-01.pdf	Fire-DK	FX0001	FX0001 - Sheet A11-02: Clarify the direction (Up?) of the stairs leading from In-Bound Waiting #S201, and running parallel to the train tracks.	08/07/2019 2:34 PM	Dan Kohnen	The direction of the stair has been provided on the drawing.
		253	Fire (Consultant)		A20-06B EXTERIOR ELEVATIONS INBOUND PLATFORM NORTH D19024-01.pdf	Fire-DK	FX0001	FX0001 - Sheet A20-06B: (typical for MANY sheets in the Architectural file) Visual resolution of many sheets is faulty; i.e., much of the graphics and wording/notes are unclear and, for the most part, virtually unreadable. Please review and replace all files that are defective in this manor.	08/07/2019 1:34 PM	Dan Kohnen	New files have been provided with the permit re-submit issuance. The files that are issued for graphics only, have no revision clouds, and include the following sheets: G30-00, A20-02, A20-04. Other sheets are re-issued for graphics as well as permit corrections.
		275	Structural (Consultant)		S40-20 TOWER BRIDGE COLUMN SCHEDULE D19024-01.pdf	Structural Comments	STC1706	STC1706 - Other plan correction comments. - Drawing S40-20 - Detail 2 - Is there a column cap plate for this column? If so Provide details.	08/07/2019 10:32 AM	Thakor Bhagwakar	Yes. It is now shown in detail 2 on S40-20.
		248	Structural (Consultant)		S40-20 TOWER BRIDGE COLUMN SCHEDULE D19024-01.pdf	Structural Comments	STC1706	STC1706 - Other plan correction comments. - Drawing S40-20 - Detail 3 - Base Plate Type 20 - Are 3/4" side plates welded to Base Plate? If so, show weld, it is not clear if 7/16" weld shown is for columns only or for full assembly. If not, show gap between side plate and base plate. Clarify detail.	08/07/2019 10:32 AM	Thakor Bhagwakar	No, it is now clarified in detail 2 on S40-20.
		249	Structural (Consultant)		S40-20 TOWER BRIDGE COLUMN SCHEDULE D19024-01.pdf	Structural Comments	STC1706	STC1706 - Other plan correction comments. - Drawing S40-20 - Detail 4 Shear Lug Detail - Indicate weld of shear weld to base plate.	08/07/2019 10:32 AM	Thakor Bhagwakar	It is shown in detail 5 on S40-20.
		234	Structural (Consultant)		S40-10 STATION HOUSE COLUMN SCHEDULE D19024-01.pdf	Structural Comments	STC1706	STC1706 - Other plan correction comments. - Drawing S40-10 - Station House Column Schedule. - Column Schedule Column s5-bK(-11"): if your using the Station House Grid shouldn't Column be labeled s5-aK with no offset dimension. Check and revise as required.	08/06/2019 3:59 PM	Thakor Bhagwakar	Yes. The column tag is now updated to reference s0 (-1'-4").
		235	Structural (Consultant)		S40-10 STATION HOUSE COLUMN SCHEDULE D19024-01.pdf	Structural Comments	STC1706	STC1706 - Other plan correction comments. - Drawing S40-10 - Station House Column Schedule. - Column Schedule Column s5(1'-5-13/16")-Bm(-1'-8-7/16"): if your using the Station House Grid shouldn't Column be labeled s5-(1'-5-13/16")-sG.5 with no offset dimension. Check and revise as required.	08/06/2019 3:59 PM	Thakor Bhagwakar	This is updated in the drawings.
		238	Refrigeration (Consultant)		08-Mechanical.pdf	pjp	VG2403 - Drawing Requirements: Show all ventilation equipment (supply and exhaust, new and existing) on the plans. F36-3030		08/06/2019 3:44 PM	Philip Peterson	Mechanical review was provided on the original (review pricing) set of mechanical drawings instead of the permit set. Mechanical reviewer has since reviewed the permit set and indicated there are no mechanical comments. Mechanical drawings have been provided for review since the system has been modified from the initial permit issuance.
		239	Refrigeration (Consultant)		08-Mechanical.pdf	pjp	Changemark #0VG2351 - Examiner's Comments:(25-400)	Piping in Elevator Machine Room is not allowed unless it serves the function of the Machine Room	08/06/2019 3:44 PM	Philip Peterson	Mechanical review was provided on the original (review pricing) set of mechanical drawings instead of the permit set. Mechanical reviewer has since reviewed the permit set and indicated there are no mechanical comments. Mechanical drawings have been provided for review since the system has been modified from the initial permit issuance.
		237	Refrigeration (Consultant)		08-Mechanical.pdf	pjp	VVO1252 - Free area of louvers.		08/06/2019 3:44 PM	Philip Peterson	Mechanical review was provided on the original (review pricing) set of mechanical drawings instead of the permit set. Mechanical reviewer has since reviewed the permit set and indicated there are no mechanical comments. Mechanical drawings have been provided for review since the system has been modified from the initial permit issuance.
		236	Refrigeration (Consultant)		08-Mechanical.pdf	pjp	VG2404 - Drawing Requirements: Show all air inlets and outlets including outdoor discharge, combustion air intakes and flue-vents on the plans and indicate volumes (CFM). F36-3030	indicate CFMs of all discharges and intakes	08/06/2019 3:44 PM	Philip Peterson	Mechanical review was provided on the original (review pricing) set of mechanical drawings instead of the permit set. Mechanical reviewer has since reviewed the permit set and indicated there are no mechanical comments. Mechanical drawings have been provided for review since the system has been modified from the initial permit issuance.

CITY OF CHICAGO
DEPARTMENT OF
BUILDINGS

Changemarks Report

		233	Electrical (Consultant)		E60-04 ELECTRIAL EQUIPMENT SCHEDULE D19024-01.pdf	LN_E1	ELEQ04	ELEQ04 Provide and/or list in electrical equipment schedule the disconnecting switch identification including amperes, phase, voltage Nema type etc. 14E-1-110.22 14E-4-430.101, 14E-4-430.110.	08/06/2019 11:54 AM	Leonardo Nolledo	Revised Note 9 on Dwg E01-02 and added Note 1 on Dwg E60-04.
		231	Electrical (Consultant)		E11-16 ENLARGED LEVEL 1.5 NORTH POWER PLANS D19024-01.pdf	LN_E1	ELEQ04	ELEQ04 Provide/indicate elevators disconnecting switch identification including amperes, phase, voltage, feeders, and Nema type. 14E-1-110.22 14E-4-430.101, 14E-4-430.110.	08/06/2019 11:08 AM	Leonardo Nolledo	Added Note 8 on Dwg E11-16.
		229	Structural (Consultant)		S12-10 STATION HOUSE MAT FOUNDATION PART PLAN D19024-01.pdf	Structural Comments	STC1706	STC1706 - Other plan correction comments. - Drawing S12-10 - Detail 1 Mat - Part Plan - Mat reinforcing can't be all top bars. Revise reinforcing notes.	08/05/2019 6:11 PM	Thakor Bhagwakar	This is now updated.
		226	Structural (Consultant)		S30-11 STATION HOUSE FOUNDATION SECTIONS D19024-01.pdf	Structural Comments	STC1706	STC1706 - Other plan correction comments. - Drawing S30-11 - Section 6 - Indicate element in a Grade Beam in Section.	08/05/2019 6:03 PM	Thakor Bhagwakar	This is now updated. The Detail is moved to 8/S30-12.
		228	Structural (Consultant)		S30-11 STATION HOUSE FOUNDATION SECTIONS D19024-01.pdf	Structural Comments	STC1706	STC1706 - Other plan correction comments. - Drawing S30-11 - Section 2 - Indicate Mat Foundation in Section.	08/05/2019 6:03 PM	Thakor Bhagwakar	This is now updated.
		227	Structural (Consultant)		S30-11 STATION HOUSE FOUNDATION SECTIONS D19024-01.pdf	Structural Comments	STC1706	STC1706 - Other plan correction comments. - Drawing S30-11 - Section 4 - Indicate wall reinforcing in Section.	08/05/2019 6:03 PM	Thakor Bhagwakar	The is now updated.
		225	Structural (Consultant)		S30-19 BUS CANOPY SECTIONS D19024-01.pdf	Structural Comments	STC1706	STC1706 - Other plan correction comments. - Drawing S30-19 - Detail 2 - Add tie information to Detail.	08/05/2019 5:39 PM	Thakor Bhagwakar	The is now updated.
		223	Structural (Consultant)		S41-11 STATION HOUSE SECTIONS AND DETAILS D19024-01.pdf	Structural Comments	STC1706	STC1706 - Other plan correction comments. - Drawing S41-11 - Detail 2 - Near end of wall is a Section Cut 5/S41-11. Add "Oec" to Section Cut.	08/05/2019 5:35 PM	Thakor Bhagwakar	The is now updated.
		224	Structural (Consultant)		S41-11 STATION HOUSE SECTIONS AND DETAILS D19024-01.pdf	Structural Comments	STC1706	STC1706 - Other plan correction comments. - Drawing S41-11 - details 3 , 4 & 5 - Add end of wall reinforcing and stud information.	08/05/2019 5:35 PM	Thakor Bhagwakar	The is now updated.
		218	Structural (Consultant)		S30-12 STATION HOUSE FOUNDATION SECTIONS D19024-01.pdf	Structural Comments	STC1706	STC1706 - Other plan correction comments. - Drawing S30-12 - Detail 6 - Notes Reference Section is incorrect, revise to Section 1/S30-12.	08/05/2019 5:19 PM	Thakor Bhagwakar	The is now updated.
		219	Structural (Consultant)		S30-12 STATION HOUSE FOUNDATION SECTIONS D19024-01.pdf	Structural Comments	STC1706	STC1706 - Other plan correction comments. - Drawing S30-15 - Detail 6 - Is Section 2/S30-12 applicable here also or is column and base plate embedded in wall? Clarify Detail.	08/05/2019 5:19 PM	Thakor Bhagwakar	There is no detail 6 on S30-15 in the permit set. We presume you are refering to detail 6 on S30-12. If so, yes, detail 2 applies to detail 6 as well. This is now indicated in detail 6.
		222	Structural (Consultant)		S30-12 STATION HOUSE FOUNDATION SECTIONS D19024-01.pdf	Structural Comments	STC1706	STC1706 - Other plan correction comments. - Drawing S30-12 Detail 2 - This Detail occurs at more than just one column line. Revise column line designation.	08/05/2019 5:19 PM	Thakor Bhagwakar	The is now updated.
		221	Structural (Consultant)		S30-12 STATION HOUSE FOUNDATION SECTIONS D19024-01.pdf	Structural Comments	STC1706	STC1706 - Other plan correction comments. - Drawing S30-12 - Details 4 & 5 - Show Section Cut 2/S30-12 thru wall and column in these Details.	08/05/2019 5:19 PM	Thakor Bhagwakar	This is now updated.
		220	Structural (Consultant)		S30-12 STATION HOUSE FOUNDATION SECTIONS D19024-01.pdf	Structural Comments	STC1706	STC1706 - Other plan correction comments. - Drawing S30-12 - Details 4, 5 & 6 - Section 3/S30-12 is really taken above wall cap. Raise Section cuts is all 3 details.	08/05/2019 5:19 PM	Thakor Bhagwakar	This is now updated.
		217	Structural (Consultant)		S41-10 STATION HOUSE SECTIONS AND DETAILS D19024-01.pdf	Structural Comments	STC1706	STC1706 - Other plan correction comments. - Drawing S41-10 - Detail 1 - Provide complete Details for Column Cap plate , Base Plate and attachment to Cast-Steel ends.	08/05/2019 4:50 PM	Thakor Bhagwakar	Detail 5/S41-10 is added to the drawings.
		215	Structural (Consultant)		S30-13 STATION HOUSE CONCRETE DETAILS D19024-01.pdf	Structural Comments	STC1706	STC1706 - Other plan correction comments. - Drawing S30-13 - Details1, 2 & 3 - Provide side wall reinforcing information.	08/05/2019 4:00 PM	Thakor Bhagwakar	Details reference 1/S30-12 which provides rebar information.
		216	Structural (Consultant)		S30-13 STATION HOUSE CONCRETE DETAILS D19024-01.pdf	Structural Comments	STC1706	STC1706 - Other plan correction comments. - Drawing S30-13 - Details 1, 2 & 3 Notes - Wall Reinforcing shown in Section 1/S30-12 is for a concrete kneewall and grade beam at grade level. How is that information applicable for walls shown on this Drawing for 2nd Floor with a thicker wall? Clarify reinforcing notes.	08/05/2019 4:00 PM	Thakor Bhagwakar	The upper portion of the wall in 1/S30-12 is sloped and slopes up to level 2, becoming the wall shown on S30-13. Rebar notes added to S30-13 for clarity.
		263	Architectural (Consultant)		A62-01 DOOR SCHEDULE TYPES D19024-01.pdf	Architecture	AGS839	AGS839 Safety glazing: doors. Clarify (note) the safety glazing for the doors.	08/05/2019 3:30 PM	J Michael Kilpatrick	Safety glazing has been noted for glass doors.
		169	Fire (Consultant)		G40-00 CODE COMPLIANCE DATA D19024-01.pdf	Fire-DK	FX0001	FX0001 - Sheet G40-00: In the Code Matrix, under Exit Requirements, there are references to an NFPA standard, (#1307), but the number of that standard is not legible; Please revise for clarity of intent.	08/05/2019 3:22 PM	Dan Kohnen	The reference is to NFPA 130. a new file has been provided with the permit re-submit issuance.
		262	Architectural (Consultant)		A43-06 ENLARGED INT ELEVATIONS LEVEL 02 D19024-01.pdf	Architecture	Changemark note #01	AGS841 Guardrails Clarify (with notes, dimensions, etc) heights of guardrails at L02 Stair.	08/05/2019 3:11 PM	J Michael Kilpatrick	Guardrail heights have been added to the drawing.
		210	Structural (Consultant)		S41-14 STATION HOUSE SECTIONS AND DETAILS D19024-01.pdf	Structural Comments	STC1706	STC1706 - Other plan correction comments. - Drawing S41-14 - Detail 5 - Exterior Glazing Corner Support - You are not allowed to use an N-Bolt in a long slotted hole with slot in direction of load per AISC. Revise.	08/05/2019 3:30 PM	Thakor Bhagwakar	The slot is not in direction of load. Angle resists lateral load only.
		214	Structural (Consultant)		S41-14 STATION HOUSE SECTIONS AND DETAILS D19024-01.pdf	Structural Comments	STC1706	STC1706 - Other plan correction comments. - Drawing S41-14 - Details 1, 2 & 3 - Slab shown has 3 layers of reinforcing. Indicate reinforcing for each layer as is noted in Detail 4 this sheet. - Also why are there long headed studs shown in each slab segment. Clarify and revise Details as required.	08/05/2019 3:30 PM	Thakor Bhagwakar	The rebar information is shown in detail 4. We intentionally show in one location only to avoid possible inconsistencies. They are conneted to the top of the steel beam. This is consistent in details 1, 2, 3, 4.
		212	Structural (Consultant)		S41-14 STATION HOUSE SECTIONS AND DETAILS D19024-01.pdf	Structural Comments	STC1706	STC1706 - Other plan correction comments. - Drawing S41-14 - Detail 4 - Section - Station North Slab To Platform Transition - Column, Girder, Column Line designation appears to be misaligned with the slab. Revise Detail.	08/05/2019 3:30 PM	Thakor Bhagwakar	Member offsets are shown accurately in the detail and dimensioned on plan.
		213	Structural (Consultant)		S41-14 STATION HOUSE SECTIONS AND DETAILS D19024-01.pdf	Structural Comments	STC1706	STC1706 - Other plan correction comments. - Drawing S41-14 - Detail 1 - Section - North West Station Corner - Indicate reinforcing in side panel or where reinforcing can be found.	08/05/2019 3:30 PM	Thakor Bhagwakar	This is updated.
		209	Structural (Consultant)		S41-14 STATION HOUSE SECTIONS AND DETAILS D19024-01.pdf	Structural Comments	STC1706	STC1706 - Other plan correction comments. - Drawing S41-14 - Detail 5 - Exterior Glazing Corner Support - Provide min 2 bolt connections at Roof and Level 02.	08/05/2019 3:30 PM	Thakor Bhagwakar	This is updated.
		211	Structural (Consultant)		S41-14 STATION HOUSE SECTIONS AND DETAILS D19024-01.pdf	Structural Comments	STC1706	STC1706 - Other plan correction comments. - Drawing S41-14 - Detail 3 - Section - North East Station Corner - Revise Detail. Column cap plates and column base plates are supposed to be attached to the beam flanges.	08/05/2019 3:30 PM	Thakor Bhagwakar	This is updated in the drawings.
		168	Fire (Consultant)		G10-00 GENERAL PROJECT NOTES D19024-01.pdf	Fire-DK	FX0001	FX0001 - Sheet G10-00: At general note #25, clarify that the noted access to fire-safety features within the construction zone, must also be maintained in other nearby areas.	08/05/2019 1:58 PM	Dan Kohnen	The note has been revised.
		208	Structural (Consultant)		S50-00 NAIL LAMINATED TIMBER DETAILS D19024-01.pdf	Structural Comments	STC1706	STC1706 - Other plan correction comments. - Drawing S50-00 - NLP Roof Panels - At a preliminary meeting I was pointed out to you that a ACS "Administrative Code Adjustment" request needed to be obtained for this from the City. Has approval of this been obtained? If so submit Approved Form for review. If not, obtain it and submit it.	08/07/2019 10:42 AM	Thakor Bhagwakar	See G40-00. The ACAR and the approval was also attached to the project application section of ProjectDox.
		207	Structural (Consultant)		S50-02 NAIL LAMINATED TIMBER DETAILS D19024-01.pdf	Structural Comments	STC1706	STC1706 - Other plan correction comments. - Drawing S50-00 - NLP Roof Panels - At a preliminary meeting I was pointed out to you that a ACS "Administrative Code Adjustment" request needed to be obtained for this from the City. Has approval of this been obtained? If so submit Approved Form for review. If not, obtain it and submit it.	08/07/2019 10:44 AM	Thakor Bhagwakar	See G40-00. The ACAR and the approval was also attached to the project application section of ProjectDox.
		206	Structural (Consultant)		S50-01 NAIL LAMINATED TIMBER DETAILS D19024-01.pdf	Structural Comments	STC1706	STC1706 - Other plan correction comments. - Drawing S50-00 - NLP Roof Panels - At a preliminary meeting I was pointed out to you that a ACS "Administrative Code Adjustment" request needed to be obtained for this from the City. Has approval of this been obtained? If so submit Approved Form for review. If not, obtain it and submit it.	08/07/2019 10:44 AM	Thakor Bhagwakar	See G40-00. The ACAR and the approval was also attached to the project application section of ProjectDox.
		261	Architectural (Consultant)		A41-20 ENLARGED STAIR PLANS AND SECTIONS PLATFORM D19024-01.pdf	Architecture	Changemark note #02	AGG841 Guardrails 33|13-124-320| Clarify height of guardrails	08/05/2019 1:46 PM	J Michael Kilpatrick	Guardrail heights have been added to the drawing.
		260	Architectural (Consultant)		A41-20 ENLARGED STAIR PLANS AND SECTIONS PLATFORM D19024-01.pdf	Architecture	AGXS818	AGXS818 Exit stairs: indicate heights of stair risers 10[13-160-300].	08/05/2019 1:46 PM	J Michael Kilpatrick	Riser heights have been indicated on the drawing.
		202	Structural (Consultant)		S11-13 STATION HOUSE PLATFORM LEVEL PLAN D19024-01.pdf	Structural Comments	STC1706	STC1706 - Other plan correction comments. - Drawing S11-13 - Station House - Platform Level South Plan at Elevator - Indicate all Wall Elevations shown on Drawings S20-27 & S20-28 on Plan.	08/05/2019 5:40 PM	Thakor Bhagwakar	Wall elevations are shown in the core part plan on S30-17. If elevation marks are shown on the S11-10 series drawings, the plans are too cluttered and text overlaps.
		203	Structural (Consultant)		S11-13 STATION HOUSE PLATFORM LEVEL PLAN D19024-01.pdf	Structural Comments	STC1706	STC1706 - Other plan correction comments. - Drawing S11-13 - Detail 2 - Station House - Platform Level North Plan - At north side of plan is a line whicj appear to be a Matchline. If it is a Matchline indicate adjacent Drawing to Matchline. If not, remove line.	08/05/2019 5:40 PM	Thakor Bhagwakar	This is updated.
		204	Structural (Consultant)		S11-13 STATION HOUSE PLATFORM LEVEL PLAN D19024-01.pdf	Structural Comments	STC1706	STC1706 - Other plan correction comments. - Drawing S11-13 - Detail 2 - Station House - Platform Level North Plan - Indicate Slab Type.	08/05/2019 5:40 PM	Thakor Bhagwakar	This is updated.
		205	Structural (Consultant)		S11-13 STATION HOUSE PLATFORM LEVEL PLAN D19024-01.pdf	Structural Comments	STC1706	STC1706 - Other plan correction comments. Drawing S11-13 - Detail 1 - Station House - Platform Level South Plan. - At sG.5 between s7 & s8 is a beam with Note 9 called out. Note 9 is incorrect for this location. Note 13 appears to be correct. Revise.	08/05/2019 5:40 PM	Thakor Bhagwakar	This is updated.
		201	Structural (Consultant)		S11-12 STATION HOUSE SLAB ON GRADE PLAN D19024-01.pdf	Structural Comments	STC1706	STC1706 - Other plan correction comments. - Drawing S11-12 - Station House - Slab on Grade and Wall South Plan at Elevator - Indicate all Wall Elevations shown on Drawings S20-27 & S20-28 on Plan.	08/06/2019 3:39 PM	Thakor Bhagwakar	Wall elevations are shown in the core part plan on S30-17. If elevation marks are shown on the S11-10 series drawings, the plans are too cluttered and text overlaps.
		200	Structural (Consultant)		S11-11 STATION HOUSE CAP PLAN D19024-01.pdf	Structural Comments	STC1706	STC1706 - Other plan correction comments. - Drawing S11-11 - Station House - Caisson Cap South Plan at Elevator - Indicate all Wall Elevations shown on Drawings S20-27 & S20-28 on Plan.	08/05/2019 9:33 AM	Thakor Bhagwakar	Wall elevations are shown in the core part plan on S30-17. If elevation marks are shown on the S11-10 series drawings, the plans are too cluttered and text overlaps.
		166	Structural (Consultant)		DGL-100% Design Phase Calculation Package-Structural.pdf	Structural Comments	STC0001	STC0001 - Calculations page 352. - Bridge Member

Changemarks Report

245	Structural (Consultant)		DGL-100% Design Phase Calculation Package-Structural.pdf	Structural Comments	STC0001	STC0001 - Calculations page 353 - North End Member Sizes from SAP Analysis Model - Clrearly label Reaction Points. Provide Table showing Reaction Values for individual loadings of Dead, Live, Snow, Wind & Thermal.	08/08/2019 1:01 PM	Thakor Bhagwakar	See updated calculation package supplement.
162	Structural (Consultant)		S30-17 STATION HOUSE CONCRETE SHEARWALL DETAILS D19024-01.pdf	Structural Comments	STC1706	STC1706 - Other plan correction comments. - Drawing S30-17 - Detail 1 - At column lines sD & sF : Horizontal reinforcing for walls on both column lines should be the same. Revise horiz. reinforcing in wall on sD.	08/04/2019 1:24 PM	Thakor Bhagwakar	This is updated.
164	Structural (Consultant)		S30-17 STATION HOUSE CONCRETE SHEARWALL DETAILS D19024-01.pdf	Structural Comments	STC1706	STC1706 - Other plan correction comments. - Drawing S30-17 - Detail 1 - Indicate where Wall Elevation shown in Detail 2 is taken in Detail 1.	08/04/2019 1:24 PM	Thakor Bhagwakar	The architectural reveal doesn't occur where the typical wall plan detail is shown. Reveal locations are called out on the concrete wall elevations.
161	Structural (Consultant)		S30-17 STATION HOUSE CONCRETE SHEARWALL DETAILS D19024-01.pdf	Structural Comments	STC1706	STC1706 - Other plan correction comments. - Drawing S30-17 - Detail 1 - Shearwall Part Plan - Calculations for shearwall page 484 indicate shearwalls are to have a total of 42-#10 vertical bars including 10-#10 bars each end or wall. Revise reinforcing per calculations.	08/04/2019 1:24 PM	Thakor Bhagwakar	This is updated in the drawings.
163	Structural (Consultant)		S30-17 STATION HOUSE CONCRETE SHEARWALL DETAILS D19024-01.pdf	Structural Comments	STC1706	STC1706 - Other plan correction comments. - Drawing S30-17 - Detail 1 - Indicate reinforcing both vert. and horiz. in walls on column lines s7 & s8 an in the 8" wall between sF & sG.	08/04/2019 1:24 PM	Thakor Bhagwakar	This is updated.
165	Structural (Consultant)		S30-17 STATION HOUSE CONCRETE SHEARWALL DETAILS D19024-01.pdf	Structural Comments	STC1706	STC1706 - Other plan correction comments. Drawing S30-17 - Detail 2 - At column line sF offset dimension for the Architectural Wall Reveal is a minimum of 9". Shear wall on sF line is 18" thick. Revise Detail.	08/04/2019 1:24 PM	Thakor Bhagwakar	Comment unclear. Architectural reveal is 6" per the architectural drawings.
194	Structural (Consultant)		S20-28 TOWER BRIDGE ELEVATIONS D19024-01.pdf	Structural Comments	STC1706	STC1706 - Other plan correction comments. - Drawing S20-28 - Details 1 & 23 - Elevation at Grids s* & s7 - Provide information where elevations of HSS 8x3x1/4 girts/struts and EP-4 Embed plates shown can be found.	08/05/2019 11:08 AM	Thakor Bhagwakar	This is updated. Mullions for exterior wall and their connections are by the cladding manufacturer/delegated design engineer.
158	Structural (Consultant)		S20-28 TOWER BRIDGE ELEVATIONS D19024-01.pdf	Structural Comments	STC1706	STC1706 - Other plan correction comments. - Drawing 20-28 - Detail 1 - Elevation at Grid s8 - At Level 03 between sF & sG abd the 2 center EP4 plates shown an embed plate for horizontal bracing is required. see framing plan S11-24. Provide plate.	08/05/2019 11:08 AM	Thakor Bhagwakar	This is updated in the drawings.
192	Structural (Consultant)		S20-28 TOWER BRIDGE ELEVATIONS D19024-01.pdf	Structural Comments	STC1706	STC1706 - Other plan correction comments. Drawing S20-28 - detail 1 Elevation at Grid s8 - on Column lines sF and sD at EP-2, provide either EI of plates or a dimension to locate plates.	08/05/2019 11:08 AM	Thakor Bhagwakar	Elevation of top of brace is shown on S20-27.
196	Structural (Consultant)		S20-28 TOWER BRIDGE ELEVATIONS D19024-01.pdf	Structural Comments	STC1706	STC1706 - Other plan correction comments. - Drawing S20-28 - Details 1 & 2 - At Column Lines sF and sD provide embed plate information for connection of High Roof Framing to walls.	08/05/2019 11:08 AM	Thakor Bhagwakar	High roof embed plates are shown on these elevations.
195	Structural (Consultant)		S20-28 TOWER BRIDGE ELEVATIONS D19024-01.pdf	Structural Comments	STC1706	STC1706 - Other plan correction comments. - Drawing S20-28 - Details 1 & 2 - At top of walls provide embed plates and detail for connection of Elevator Hoist Beam.	08/05/2019 11:08 AM	Thakor Bhagwakar	This is updated.
193	Structural (Consultant)		S20-28 TOWER BRIDGE ELEVATIONS D19024-01.pdf	Structural Comments	STC1706	STC1706 - Other plan correction comments. - Drawing S20-27 - Details 1, & 2 - Indicate top of wall elevations for all walls.	08/05/2019 11:08 AM	Thakor Bhagwakar	All top of wall elevations are now shown on S20-27.
197	Structural (Consultant)		S20-28 TOWER BRIDGE ELEVATIONS D19024-01.pdf	Structural Comments	STC1706	STC1706 - Other plan correction comments. - Drawing S20-18 - Detail 2 - Elevation at Grid s7 - At Elevation Level 2.9 is a Detail Callout 2/S30-17. Indicate that this detail is applicable on the opposite face.	08/05/2019 11:08 AM	Thakor Bhagwakar	This is updated.
157	Structural (Consultant)		S42-29 BRIDGE STEEL CONNECTION DETAILS D19024-01.pdf	Structural Comments	STC1706	STC1706 - Other plan correction comments. Drawing S42-29 - All details indicate everything is to be shop welded. Trusses are too large to be fully assembled in the shop. Indicate on plans and elevations where field splices are to occur and provide field splice details.	08/04/2019 10:42 AM	Thakor Bhagwakar	Bolted connections are indicated at the north end of the bridge in detail 1 and 2 on S42-23 as well as on the south end of the bridge in details 1, 2, 3, 4a, and 5b. Additionally, web and chord splice details are included in detail 6/S42-29.
156	Structural (Consultant)		S42-28 BRIDGE STEEL CONNECTION DETAILS D19024-01.pdf	Structural Comments	STC1706	STC1706 - Other plan correction comments. Drawing S42-28 - All details indicate everything is to be shop welded. Trusses are too large to be fully assembled in the shop. Indicate on plans and elevations where field splices are to occur and provide field splice details.	08/04/2019 10:41 AM	Thakor Bhagwakar	Bolted connections are indicated at the north end of the bridge in detail 1 and 2 on S42-23 as well as on the south end of the bridge in details 1, 2, 3, 4a, and 5b. Additionally, web and chord splice details are included in detail 6/S42-29.
155	Structural (Consultant)		S42-27 BRIDGE STEEL CONNECTION DETAILS D19024-01.pdf	Structural Comments	STC1706	STC1706 - Other plan correction comments. Drawing S42-27 - All details indicate everything is to be shop welded. Trusses are too large to be fully assembled in the shop. Indicate on plans and elevations where field splices are to occur and provide field splice details.	08/04/2019 10:40 AM	Thakor Bhagwakar	Bolted connections are indicated at the north end of the bridge in detail 1 and 2 on S42-23 as well as on the south end of the bridge in details 1, 2, 3, 4a, and 5b. Additionally, web and chord splice details are included in detail 6/S42-29.
152	Structural (Consultant)		S20-26 TOWER BRIDGE ELEVATIONS D19024-01.pdf	Structural Comments	STC1706	STC1706 - Other plan correction comments. - Drawing S20-26 - Framing Details indicate all connections are to be shop welded. Trusses are to large to be completely shop welded. Indicate on plans locations of field splices and provide details for the field connections required.	08/05/2019 9:04 AM	Thakor Bhagwakar	Bolted connections are indicated at the north end of the bridge in detail 1 and 2 on S42-23 as well as on the south end of the bridge in details 1, 2, 3, 4a, and 5b. Additionally, web and chord splice details are included in detail 6/S42-29.
154	Structural (Consultant)		S20-26 TOWER BRIDGE ELEVATIONS D19024-01.pdf	Structural Comments	STC1706	STC1706 - Other plan correction comments. - Drawing S20-26 - Detail 1 - At Column line bC bottom chord show support post down to 24" Plate Girder. Provide connection detail of post to girder. - At Detail 23/S42-28 reference. Either reference noted should be marked "Ops" or incorrect.	08/05/2019 9:04 AM	Thakor Bhagwakar	This is updated.
153	Structural (Consultant)		S20-26 TOWER BRIDGE ELEVATIONS D19024-01.pdf	Structural Comments	STC1706	STC1706 - Other plan correction comments. - Drawing S20-26 - Detail 1 - Elevation at Grid b7 - Column Line bA. Provide connection details at top & bottom chords.	08/05/2019 9:04 AM	Thakor Bhagwakar	This is updated.
191	Structural (Consultant)		S20-25 TOWER BRIDGE ELEVATIONS D19024-01.pdf	Structural Comments	STC1706	STC1706 - Other plan correction comments. - Drawing S20-25 - Elevation at Grid b5 - At Column line bC bottom chord show support post down to 24" Plate Girder. Provide connection detail of post to girder.	08/05/2019 9:01 AM	Thakor Bhagwakar	This is updated.
151	Structural (Consultant)		S20-25 TOWER BRIDGE ELEVATIONS D19024-01.pdf	Structural Comments	STC1706	STC1706 - Other plan correction comments. - Drawing S20-25 - Drawing S20-25 - Detail 1 - At Column Line bH bottom chord. Incorrect reference is noted. Correct.	08/05/2019 9:01 AM	Thakor Bhagwakar	This is updated.
149	Structural (Consultant)		S20-25 TOWER BRIDGE ELEVATIONS D19024-01.pdf	Structural Comments	STC1706	STC1706 - Other plan correction comments. - Drawing S20-25 - Detail 1 - Elevation at Grid b5 - Column Line bA. Provide connection details at top & bottom chords.	08/05/2019 9:01 AM	Thakor Bhagwakar	This is updated.
148	Structural (Consultant)		S20-25 TOWER BRIDGE ELEVATIONS D19024-01.pdf	Structural Comments	STC1706	STC1706 - Other plan correction comments. - Drawing S20-25 - Framing Details indicate all connections are to be shop welded. Trusses are to large to be completely shop welded. Indicate on plans locations of field splices and provide details for the field connections required.	08/05/2019 9:01 AM	Thakor Bhagwakar	Bolted connections are indicated at the north end of the bridge in detail 1 and 2 on S42-23 as well as on the south end of the bridge in details 1, 2, 3, 4a, and 5b. Additionally, web and chord splice details are included in detail 6/S42-29.
150	Structural (Consultant)		S20-25 TOWER BRIDGE ELEVATIONS D19024-01.pdf	Structural Comments	STC1706	STC1706 - Other plan correction comments. - Drawing S20-25 - Drawing S20-25 - Detail 1 - At Column Line bE bottom chord. Incorrect reference is noted. Correct.	08/05/2019 9:01 AM	Thakor Bhagwakar	This is updated.
146	Structural (Consultant)		S11-25 TOWER BRIDGE ROOF FRAMING PLAN D19024-01.pdf	Structural Comments	STC1706	STC1706 - Other plan correction comments. - Drawing S11-25 - Tower/Bridge - Level 4 Roof Plan - Indicate meaning of abbreviation LLA and symbol X used at column lines.	08/05/2019 1:23 PM	Thakor Bhagwakar	LLA is indicated in the abbreviations list on S00-01 "Life Line Anchor."
147	Structural (Consultant)		S11-25 TOWER BRIDGE ROOF FRAMING PLAN D19024-01.pdf	Structural Comments	STC1706	STC1706 - Other plan correction comments. - Drawing S11-25 - Framing Details indicate all connections are to be shop welded. Trusses are to large to be completely shop welded. Indicate on plans locations of field splices and provide details for the field connections required.	08/05/2019 1:23 PM	Thakor Bhagwakar	Bolted connections are indicated at the north end of the bridge in detail 1 and 2 on S42-23 as well as on the south end of the bridge in details 1, 2, 3, 4a, and 5b. Additionally, web and chord splice details are included in detail 6/S42-29.
144	Structural (Consultant)		S11-25 TOWER BRIDGE ROOF FRAMING PLAN D19024-01.pdf	Structural Comments	STC1706	STC1706 - Other plan correction comments. - Drawing S11-25 along column line b4 between bN and bK - Indicate location and type of Embed Plates required for framing.	08/05/2019 1:23 PM	Thakor Bhagwakar	This information is shown in the wall elevation. In order to reduce likelihood of notes becoming uncoordinated, we elect to show them in one location only.
190	Structural (Consultant)		S11-25 TOWER BRIDGE ROOF FRAMING PLAN D19024-01.pdf	Structural Comments	STC1706	STC1706 - Other plan correction comments. - Drawing S11-25 - Detail 1 - Glassfor shown in Detail for roofing is not considered structural. It requires written approval. Submit the completed "Administrative Code Adjustment" form found on the City's web-site to the City for Approval. Submit Approved Form for review.	08/05/2019 1:23 PM	Thakor Bhagwakar	Section 5 on General Notes sheet S00-04 is added to provide minimum glass thickness.
145	Structural (Consultant)		S11-25 TOWER BRIDGE ROOF FRAMING PLAN D19024-01.pdf	Structural Comments	STC1706	STC1706 - Other plan correction comments. - Drawing S11-25 - Tower/Bridge - Level 4 Roof Plan - Indicate light intensity framing shown between columns bM and bK is Station House High Roof Framing which can be found on Drawing S11-15.	08/05/2019 1:23 PM	Thakor Bhagwakar	This is updated.
141	Structural (Consultant)		S11-24 TOWER BRIDGE BRIDGE FLOOR FRAMING PLAN D19024-01.pdf	Structural Comments	STC1706	STC1706 - Other plan correction comments. - Drawing S11-24 - Framing Details indicate all connections are to be shop welded. Trusses are to large to be completely shop welded. Indicate on plans locations of field splices and provide details for the field connections required.	08/04/2019 10:04 AM	Thakor Bhagwakar	Bolted connections are indicated at the north end of the bridge in detail 1 and 2 on S42-23 as well as on the south end of the bridge in details 1, 2, 3, 4a, and 5b. Additionally, web and chord splice details are included in detail 6/S42-29.
143	Structural (Consultant)		S11-24 TOWER BRIDGE BRIDGE FLOOR FRAMING PLAN D19024-01.pdf	Structural Comments	STC1706	STC1706 - Other plan correction comments. - Drawing S11-24 Tower/Bridge - Level 3 Floor Plan - Between column lines bN and bM coordinate truss cord size with elevations HSS 6.625x0.625 and revise.	08/04/2019 10:04 AM	Thakor Bhagwakar	This is updated on plan.
142	Structural (Consultant)		S11-24 TOWER BRIDGE BRIDGE FLOOR FRAMING PLAN D19024-01.pdf	Structural Comments	STC1706	STC1706 - Other plan correction comments. - Drawing S11-24 along column line b4 between bN and bK - Indicate location and type of Embed Plates required for framing.	08/04/2019 10:04 AM	Thakor Bhagwakar	This information is shown in the wall elevation. In order to reduce likelihood of notes becoming uncoordinated, we elect to show them in one location only.
134	Structural (Consultant)		S11-24 TOWER BRIDGE BRIDGE FLOOR FRAMING PLAN D19024-01.pdf	Structural Comments	STC1706	STC1706 - Other plan correction comments. - Drawing S11-24 - Tower/Bridge - Level 3 Floor Plan - Indicate reference for framing plans between colimn lines b4 to b8 and bA to bD enclosed by dashed rectangle.	08/04/2019 10:04 AM	Thakor Bhagwakar	This is updated.
139	Structural (Consultant)		S11-24 TOWER BRIDGE BRIDGE FLOOR FRAMING PLAN D19024-01.pdf	Structural Comments	STC1706	STC1706 - Other plan correction comments. - Drawing S11-24 - Detail 1 Tower/Bridge - Level 3 Floor Plan - At column line bM. Move beam HSS 8.625 designation so HSS 10 framing member can be read. Also move end of Section Cut line so beam Hss10 can be read.	08/04/2019 10:04 AM	Thakor Bhagwakar	This is updated.
135	Structural (Consultant)		S11-24 TOWER BRIDGE BRIDGE FLOOR FRAMING PLAN D19024-01.pdf	Structural Comments	STC1706	STC1706 - Other plan correction comments. - Drawing S11-24 - Tower/Bridge - Level 3 Floor Plan - Indicate beam size on column line bE.	08/04/2019 10:04 AM	Thakor Bhagwakar	This is updated.
138	Structural (Consultant)		S11-24 TOWER BRIDGE BRIDGE FLOOR FRAMING PLAN D19024-01.pdf	Structural Comments	STC1706	STC1706 - Other plan correction comments. - Drawing S11-24 - Detail 1 Tower/Bridge - Level 3 Floor Plan - Note at column line bN. Dimensions are not given in Detail 1/S41-20. Provide dimensions.	08/04/2019 10:04 AM	Thakor Bhagwakar	This is updated.
136	Structural (Consultant)		S11-24 TOWER BRIDGE BRIDGE FLOOR FRAMING PLAN D19024-01.pdf	Structural Comments	STC1706	STC1706 - Other plan correction comments. - Drawing S11-24 - Detail 1 Tower/Bridge - Level 3 Floor Plan - Between column lines bM and bJ indicate the 2 beam size missing.	08/04/2019 10:04 AM	Thakor Bhagwakar	This is updated.
140	Structural (Consultant)		S11-24 TOWER BRIDGE BRIDGE FLOOR FRAMING PLAN D19024-01.pdf	Structural Comments	STC1706	STC1706 - Other plan correction comments. - Drawing S11-24 - Detail 1 Tower/Bridge - Level 3 Floor Plan - Between column lines bM and bJ, at B4 indicate bracing sizes.	08/04/2019 10:04 AM	Thakor Bhagwakar	This is updated
137	Structural (Consultant)		S11-24 TOWER BRIDGE BRIDGE FLOOR FRAMING PLAN D19024-01.pdf	Structural Comments	STC1706	STC1706 - Other plan correction comments. - Drawing S11-24 - Detail 1 Tower/Bridge - Level 3 Floor Plan - Between columns bP and bN. Move beam designation so Brace size can be read.	08/04/2019 10:04 AM	Thakor Bhagwakar	This is updated
273	Structural (Consultant)		S42-25 TOWER STEEL CONNECTION DETAILS D19024-01.pdf	Structural Comments	STC1706	STC1706 - Other plan correction comments. - Drawing S42-25 - Detail 3 - Show 3/4" column side plates in detail. - If there is a column cap plate for this built-up column show and indicate that in the detail. - See comments on page 1680 of calculations. Revise detail as required.	08/07/2019 10:28 AM	Thakor Bhagwakar	This is updated in the drawings.

Changemarks Report

124	Structural (Consultant)		S42-25 TOWER STEEL CONNECTION DETAILS D19024-01.pdf	Structural Comments	STC1706	STC1706 - Other plan correction comments. Drawing S42-25 1. All details indicate everything is to be shop welded. Trusses and towers are too large to be fully assembled in the shop. Indicate on plans and elevations where field splices are to occur and provide field splice details. 2. Provide dimensions of the face of rectangular HSS members where they occur in the details shown. 3. In cases where small HSS msmbers are framing into larger HSS sections full pen welds are called out when perhaps a simple fillet weld would be adequate. Check full pen weld cases. 4. References to Details for members in another plane are incorrect. Check reference callouts. 5. Comments are typical all Truss Connection Detail sheets.	08/07/2019 10:28 AM	Thakor Bhagwakar	Bolted connections are indicated at the north end of the bridge in detail 1 and 2 on S42-23 as well as on the south end of the bridge in details 1, 2, 3, 4a, and 5b. Additionally, web and chord splice details are included in detail 6/S42-29.
123	Structural (Consultant)		S42-21 TOWER STEEL CONNECTION DETAILS D19024-01.pdf	Structural Comments	STC1706	STC1706 - Other plan correction comments. Drawing S42-21 1. All details indicate everything is to be shop welded. Trusses and towers are too large to be fully assembled in the shop. Indicate on plans and elevations where field splices are to occur and provide field splice details. 2. Provide dimensions of the face of rectangular HSS members where they occur in the details shown. 3. In cases where small HSS msmbers are framing into larger HSS sections full pen welds are called out when perhaps a simple fillet weld would be adequate. Check full pen weld cases. 4. References to Details for members in another plane are incorrect. Check reference callouts. 5. Comments are typical all Truss Connection Detail sheets.	08/04/2019 10:40 AM	Thakor Bhagwakar	Bolted connections are indicated at the north end of the bridge in detail 1 and 2 on S42-23 as well as on the south end of the bridge in details 1, 2, 3, 4a, and 5b. Additionally, web and chord splice details are included in detail 6/S42-29.
122	Structural (Consultant)		S20-23 TOWER BRIDGE ELEVATIONS D19024-01.pdf	Structural Comments	STC1706	STC1706 - Other plan correction comments. - Drawing S20-23 - Framing Details indicate all connections are to be shop welded. Trusses and towers are to large to be completely shop welded. Indicate on plans locations of field splices and provide details for the field connections required.	08/03/2019 1:24 PM	Thakor Bhagwakar	Bolted connections are indicated at the north end of the bridge in detail 1 and 2 on S42-23 as well as on the south end of the bridge in details 1, 2, 3, 4a, and 5b. Additionally, web and chord splice details are included in detail 6/S42-29.
121	Structural (Consultant)		S20-23 TOWER BRIDGE ELEVATIONS D19024-01.pdf	Structural Comments	STC1706	STC1706 - Other plan correction comments. - Drawing S20-23 - Detail 1 - At Column bC - Level 02 show HSS7x7x1/2 and provide connection detail.	08/03/2019 1:24 PM	Thakor Bhagwakar	The elevation does not cut through the pependicular framing in this view. Because of this, the outline of the member profile is not shown.
120	Structural (Consultant)		S42-24 TOWER STEEL CONNECTION DETAILS D19024-01.pdf	Structural Comments	STC1706	STC1706 - Other plan correction comments. Drawing S42-24 1. All details indicate everything is to be shop welded. Trusses and towers are too large to be fully assembled in the shop. Indicate on plans and elevations where field splices are to occur and provide field splice details. 2. Provide dimensions of the face of rectangular HSS members where they occur in the details shown. 3. In cases where small HSS msmbers are framing into larger HSS sections full pen welds are called out when perhaps a simple fillet weld would be adequate. Check full pen weld cases. 4. References to Details for members in another plane are incorrect. Check reference callouts. 5. Comments are typical all Truss Connection Detail sheets.	08/07/2019 8:58 AM	Thakor Bhagwakar	Bolted connections are indicated at the north end of the bridge in detail 1 and 2 on S42-23 as well as on the south end of the bridge in details 1, 2, 3, 4a, and 5b. Additionally, web and chord splice details are included in detail 6/S42-29.
118	Structural (Consultant)		S42-24 TOWER STEEL CONNECTION DETAILS D19024-01.pdf	Structural Comments	STC1706	STC1706 - Other plan correction comments. - Drawing S42-24 - Detail 7 - Framing plans call for a HSS 10x6x1/2 not a HSS 10x6x3/8' Coordinate and revise.	08/07/2019 8:58 AM	Thakor Bhagwakar	This is updated on plan.
243	Structural (Consultant)		S42-24 TOWER STEEL CONNECTION DETAILS D19024-01.pdf	Structural Comments	STC1706	STC1706 - Other plan correction comments. - Drawing S42-24 - Detail 3 - Show 3/4" column side plates in detail.	08/07/2019 8:58 AM	Thakor Bhagwakar	This is updated in the drawings.
119	Structural (Consultant)		S42-24 TOWER STEEL CONNECTION DETAILS D19024-01.pdf	Structural Comments	STC1706	STC1706 - Other plan correction comments. - Drawing S42-24 - Detail 10 - Framing plans call for a HSS 10x6x1/2 not a HSS 10x6x3/8' Coordinate and revise.	08/07/2019 8:58 AM	Thakor Bhagwakar	This is updated on plan.
117	Structural (Consultant)		S42-23 TOWER LEVEL 3 CONNECTION DETAILS D19024-01.pdf	Structural Comments	STC1706	STC1706 - Other plan correction comments. Drawing S42-23 1. All details indicate everything is to be shop welded. Trusses and towers are too large to be fully assembled in the shop. Indicate on plans and elevations where field splices are to occur and provide field splice details. 2. Provide dimensions of the face of rectangular HSS members where they occur in the details shown.	08/07/2019 9:48 AM	Thakor Bhagwakar	Bolted connections are indicated at the north end of the bridge in detail 1 and 2 on S42-23 as well as on the south end of the bridge in details 1, 2, 3, 4a, and 5b. Additionally, web and chord splice details are included in detail 6/S42-29.
100	Structural (Consultant)		S42-23 TOWER LEVEL 3 CONNECTION DETAILS D19024-01.pdf	Structural Comments	STC1706	STC1706 - Other plan correction comments. - Drawing S42-23 - Detail 1 - - Neither Framing Plans nor Elevations show a W12x45 beam in this location. Coordinate Detail with framing and revise.	08/07/2019 9:48 AM	Thakor Bhagwakar	W12x45 is shown on 2/S12-21.
99	Structural (Consultant)		S42-23 TOWER LEVEL 3 CONNECTION DETAILS D19024-01.pdf	Structural Comments	STC1706	STC1706 - Other plan correction comments. - Drawing S42-23 - Detail 1 - - Neither Framing Plans nor Elevations show a W12x45 beam or a HSS post in this location. Coordinate Detail with framing and revise. - Also if there is a post at this location, calculations indicate it needs to be an expansion joint revise detail. - If detail stands as drawn all calculations need to be revised for both the North Tower & Bridge.	08/07/2019 9:48 AM	Thakor Bhagwakar	The connection between the bridge truss and tower W12x45 is not designed to be an expansion joint. No expansion joint is included at that interface in the analysis model. Please indicate where in the calculation it indicates this as an expansion joint. W12x45 is shown on 2/S12-21.
272	Structural (Consultant)		S42-23 TOWER LEVEL 3 CONNECTION DETAILS D19024-01.pdf	Structural Comments	STC1706	STC1706 - Other plan correction comments. - Drawing S42-23 - Detail 2 - Calculations indicate connection between North Tower plate girder and Bridge Truss is to be an expansion joint. Revise detail. - If detail stands as drawn, all calculations need to be revised for both the North Tower & Bridge.	08/07/2019 9:48 AM	Thakor Bhagwakar	The connection between the bridge truss and north tower plate girder is not designed to be an expansion joint. No expansion joint is included at that interface in the analysis model. Please indicate where in the calculation it indicates this as an expansion joint.
115	Structural (Consultant)		S20-24 TOWER BRIDGE ELEVATIONS D19024-01.pdf	Structural Comments	STC1706	STC1706 - Other plan correction comments. - Drawing S20-24 - Detail 1 Elevation at Grid b6 - At Column line bD Level 02 provide connection detail of HSS7x7's.	08/03/2019 1:45 PM	Thakor Bhagwakar	See detail 13/S42-24. References added to S20-24 and S12-20.
116	Structural (Consultant)		S20-24 TOWER BRIDGE ELEVATIONS D19024-01.pdf	Structural Comments	STC1706	STC1706 - Other plan correction comments. - Drawing S42-22 - Detaild 2 & 3 - At column line bB, mark all Details as either "Sim" or "Ops".	08/03/2019 1:45 PM	Thakor Bhagwakar	This is updated in the drawings.
97	Structural (Consultant)		S20-24 TOWER BRIDGE ELEVATIONS D19024-01.pdf	Structural Comments	STC1706	STC1706 - Other plan correction comments. - Drawing S20-24 - Detail 2 - Elevation at Grid b8 At Low Level 3.9 is a HSS 10x6x3/8 called out. Plans on S12-21 Detail 4 call for a HSS10x6x1/2 at this location. - Coordinate and revise.	08/03/2019 1:45 PM	Thakor Bhagwakar	This is updated.
114	Structural (Consultant)		S20-24 TOWER BRIDGE ELEVATIONS D19024-01.pdf	Structural Comments	STC1706	STC1706 - Other plan correction comments. - Drawing S20-24 - Framing Details indicate all connections are to be shop welded. Trusses and towers are to large to be completely shop welded. Indicate on plans locations of field splices and provide details for the field connections required.	08/03/2019 1:45 PM	Thakor Bhagwakar	Bolted connections are indicated at the north end of the bridge in detail 1 and 2 on S42-23 as well as on the south end of the bridge in details 1, 2, 3, 4a, and 5b. Additionally, web and chord splice details are included in detail 6/S42-29.
98	Structural (Consultant)		S20-24 TOWER BRIDGE ELEVATIONS D19024-01.pdf	Structural Comments	STC1706	STC1706 - Other plan correction comments. - Drawing S20-24 - Detail 1.1 Elevation at Grid b8 - Add remainder of Elevation above Level 01.9 as you did inElevation 1 at Grid b6.	08/03/2019 1:45 PM	Thakor Bhagwakar	This information is added to the elevation.
96	Structural (Consultant)		S12-21 TOWER BRIDGE PART PLANS D19024-01.pdf	Structural Comments	STC1706	STC1706 - Other plan correction comments. - Drawing S12-21 - Detail 2 - Tower/Bridge - Level 2.9 Low Framing Partial Plan - Between column lines b5 and b7 the is framing shown with no designations. If framing is on shown on some other Level indicate what Level and where the information can be found. If not,	08/05/2019 8:55 AM	Thakor Bhagwakar	This is updated.
90	Structural (Consultant)		S12-21 TOWER BRIDGE PART PLANS D19024-01.pdf	Structural Comments	STC1706	STC1706 - Other plan correction comments. - Drawing S12-21 - Detail 3 Tower/Bridge - Level 4 Roof Partial Plan - There is a Elevation cut in the notes below. move either notes or Elevation cut so both are legible.	08/05/2019 8:55 AM	Thakor Bhagwakar	This is updated.
109	Structural (Consultant)		S12-21 TOWER BRIDGE PART PLANS D19024-01.pdf	Structural Comments	STC1706	STC1706 - Other plan correction comments. - Drawing S12-21 - Detail 1 - Tower/Bridge - level 3 Partial Plan - Note between column line b5 & b7 near bA. There are no C10's shown on this framing plan nor are there any in Det.1/s21-20 much less dimensions. Revise notes and provide dimensions in	08/05/2019 8:55 AM	Thakor Bhagwakar	This is updated.
95	Structural (Consultant)		S12-21 TOWER BRIDGE PART PLANS D19024-01.pdf	Structural Comments	STC1706	STC1706 - Other plan correction comments. - Drawing S12-21 - Detail 1 - Tower/Bridge - Level 3 Partial Plan - At Column line b7 is Evelation Cut 2/S20-24. This cut beolngs at column line b8, move it. add Elevation cut 1.1/S20-24 at column line b7.	08/05/2019 8:55 AM	Thakor Bhagwakar	This is updated.
133	Structural (Consultant)		S12-21 TOWER BRIDGE PART PLANS D19024-01.pdf	Structural Comments	STC1706	STC1706 - Other plan correction comments. - Drawing S12-21 - Detail 2 Tower/Bridge - Level 2.9 Low Framing partial Plan - Calculations page 352 indicate posts from N-S Bridge don to Tower framing near Columns bB-b5 and bB-b7. Revise framing plans to show posts. revise framing designs to support posts or	08/05/2019 8:55 AM	Thakor Bhagwakar	This is shown in 2/S12-21 and called out as detail 1/S4-23.
189	Structural (Consultant)		S12-21 TOWER BRIDGE PART PLANS D19024-01.pdf	Structural Comments	STC1706	STC1706 - Other plan correction comments. - Drawing S12-21 - Detail 2 - Tower/Bridge - Level 2.9 Low Framing Partial Plan - Provide detail of connection of Bridge Truss support post to 24" Plate Girder at column lines b5 & b7.	08/05/2019 8:55 AM	Thakor Bhagwakar	This is shown in 2/S12-21 and called out as detail 2/S42-23.
108	Structural (Consultant)		S12-21 TOWER BRIDGE PART PLANS D19024-01.pdf	Structural Comments	STC1706	STC1706 - Other plan correction comments. - Drawing S12-21 - Detail 1 - At Column line b4 Section Cut 4/S70-20 is cut in the wrong direction for the stair detail. Revise section cut direction or change to reference to 2/S70-20.	08/05/2019 8:55 AM	Thakor Bhagwakar	This is updated.
89	Structural (Consultant)		S12-21 TOWER BRIDGE PART PLANS D19024-01.pdf	Structural Comments	STC1706	STC1706 - Other plan correction comments. Drawing S12-21 - Detail 3 Tower/Bridge - Level 4 Roof Partial Plan -Indicate framinno for at Levels 4.5 & 4.8 can be found om Drawing S11-25.	08/05/2019 8:55 AM	Thakor Bhagwakar	This is updated.

DESIGN BY:							
DRAWN BY:							
CHECKED BY:							
APPROVED BY:			01/27/2020	BUILDING PERMIT CORRECTIONS 1	PW	PW	PW
CDOT/APPROVED BY:		NO.	DATE	REVISIONS	DES.	DRW.	CHK. DCCO CDOT

LICENSED ARCHITECT MARK RICHARD WALSH 001-016935 STATE OF ILLINOIS
EXP. 11-30-2020
PERKINS+WILL INC #184000338-0001

PERKINS+WILL
The Wrigley Building
410 North Michigan Ave.
Suite 1600
Chicago, IL 60611
t 312.755.0770
f 312.755.0775
www.perkinswill.com

CDOT CHICAGO DEPARTMENT OF TRANSPORTATION
DIVISION OF ENGINEERING

154 N DAMEN AVE - DAMEN GREEN LINE STATION

CERTIFIED PLAN CORRECTIONS

CDOT PROJECT D-7-135 | DATE: 01/27/2020

SPEC. NO.

DRAWING NO. **G40-21**

REVISION NO.

Changemarks Report

No.	Discipline	Sheet	Category	Code	Comment	Date	Reviewer	Response
112	Structural (Consultant)	S12-21 TOWER BRIDGE PART PLANS D19024-01.pdf	Structural Comments	STC1706	STC1706 - Other plan correction comments. - Drawing S12-21 - Detail 3 - Tower/Bridge - Level 4 Roof Partial Plan - Provide detail for cross grace middle connection.	08/05/2019 8:55 AM	Thakor Bhagwakar	This is updated in the drawings.
94	Structural (Consultant)	S12-21 TOWER BRIDGE PART PLANS D19024-01.pdf	Structural Comments	STC1706	STC1706 - Other plan correction comments. - Drawing S12-20 - Details 1 & 3 - Glass shown in Detail for roofing is not considered a structural. It requires writtenapproval. Submit the completed "Administrative Code Adjustment" form found on the City's web-site to the City for Approval. Submit Approved Form for review.	08/05/2019 8:55 AM	Thakor Bhagwakar	Section 5 on General Notes sheet S00-04 is added to provide minimum glass thickness.
93	Structural (Consultant)	S12-21 TOWER BRIDGE PART PLANS D19024-01.pdf	Structural Comments	STC1706	STC1706 - Other plan correction comments. - Drawing S12-21 - Detail 4 - Tower/Bridge - Level 3.9 Low Roof Partial Plan - Show Elevation cut 2/S20-24 at column line b8 as you did on other floor plans.	08/05/2019 8:55 AM	Thakor Bhagwakar	This is updated.
110	Structural (Consultant)	S12-21 TOWER BRIDGE PART PLANS D19024-01.pdf	Structural Comments	STC1706	STC1706 - Other plan correction comments. - Drawing S42-23 - Detail 1 - - Drawing S12-21 - Tower/Bridge - Level 3.9 Low Roof Partial Plan - At Column lines b5 and b7 Details 1 & 2/S32-23 are showing a W12x45 not L4x4. Coordinateand revise as required.	08/05/2019 8:55 AM	Thakor Bhagwakar	This is updated.
91	Structural (Consultant)	S12-21 TOWER BRIDGE PART PLANS D19024-01.pdf	Structural Comments	STC1706	STC1706 - Other plan correction comments. - Drawing S12-21 - Details 3 Level 4 and 4 Level 3.9 - Show Elevation View 4/S20-23 as you did at all the other floor plans.	08/05/2019 8:55 AM	Thakor Bhagwakar	This is updated.
92	Structural (Consultant)	S12-21 TOWER BRIDGE PART PLANS D19024-01.pdf	Structural Comments	STC1706	STC1706 - Other plan correction comments. - Drawing S12-21 - Detail 4 - Tower/Bridge - Level 3.9 Low Roof Partial Plan - Indicate T/Steel Elev for the framing shown.	08/05/2019 8:55 AM	Thakor Bhagwakar	This information is added to the elevation.
113	Structural (Consultant)	S12-21 TOWER BRIDGE PART PLANS D19024-01.pdf	Structural Comments	STC1706	STC1706 - Other plan correction comments. - Drawing S12-21 - Framing Details indicate all connections are to be shop welded. Trusses and towers are to large to be completely shop welded. Indicate on plans locations of field splices and provide details for the field connections required.	08/05/2019 8:55 AM	Thakor Bhagwakar	Bolted connections are indicated at the north end of the bridge in detail 1 and 2 on S42-23 as well as on the south end of the bridge in details 1, 2, 3, 4a, and 5b. Additionally, web and chord splice details are included in detail 6/S42-29.
111	Structural (Consultant)	S12-21 TOWER BRIDGE PART PLANS D19024-01.pdf	Structural Comments	STC1706	STC1706 - Other plan correction comments. - Drawing S12-21 - Detail 2 - Tower/Bridge - Level 2.9 Low Framing Partisl Plan - At column ba-b8 reference is incorrect. Correct reference appears to be 4/S42-21. coordinate and revise.	08/05/2019 8:55 AM	Thakor Bhagwakar	This is the correct reference for the HSS to column connection. Additional clarification is added to the drawing.
81	Structural (Consultant)	S41-22 TOWER BRIDGE DETAILS D19024-01.pdf	Structural Comments	STC1706	STC1706 - Other plan correction comments. - Drawing S41-22 - Detail 1 - Is there a plate reinforcing the tube or is it a plate at just the stud locations. Clarify Detail.	08/02/2019 5:19 PM	Thakor Bhagwakar	This is updated.
258	Architectural (Consultant)	A41-10 ENLARGED STAIR PLANS AND SECTIONS NORTH TOWER D19024-01.pdf	Architecture	AGG841	AGG841 Guardrails Clarify (with notes, dimensions, etc) heights of guardrails at North Bridge Stair	08/02/2019 5:17 PM	J Michael Kilpatrick	Guardrail heights have been added to the drawing.
259	Architectural (Consultant)	A41-10 ENLARGED STAIR PLANS AND SECTIONS NORTH TOWER D19024-01.pdf	Architecture	AGXS818	AGXS818 Exit stairs: indicate stair widths, risers, treads, and handrails 10[13-160-300]. Clarify (notes, dimensions) stair widths between handrails, riser heights, and tread depths at North Bridge Stair	08/02/2019 5:17 PM	J Michael Kilpatrick	Stair dimensions have been provided on the drawing.
80	Structural (Consultant)	S11-22 TOWER BRIDGE LEVEL 1.5 FRAMING PLAN D19024-01.pdf	Structural Comments	STC1706	STC1706 - Other plan correction comments. - Drawing S11-22 - Tower/Bridge - Level 1.5 Plan - Section cut 1/S41-22 overlaps brace size, move Section cut to clearly show member sizes.	08/02/2019 4:58 PM	Thakor Bhagwakar	This is updated.
256	Architectural (Consultant)	A41-02 ENLARGED STAIR PLANS AND SECTION STATION D19024-01.pdf	Architecture	AGXS818	AGXS818 Exit stairs: indicate stair widths, risers, treads, and handrails 10[13-160-300]. Clarify (notes, dimensions) stair widths between handrails, riser heights, and tread depths at South Bridge Stair	08/02/2019 5:13 PM	J Michael Kilpatrick	Stair dimensions have been provided on the drawing.
257	Architectural (Consultant)	A41-02 ENLARGED STAIR PLANS AND SECTION STATION D19024-01.pdf	Architecture	AGG841	AGG841 Guardrails Clarify (with notes, dimensions, etc) heights of guardrails at South Bridge Stair	08/02/2019 5:13 PM	J Michael Kilpatrick	Guardrail heights have been added to the drawing.
107	Structural (Consultant)	S20-21 TOWER BRIDGE ELEVATIONS D19024-01.pdf	Structural Comments	STC1706	STC1706 - Other plan correction comments. - Drawing S20-21 - Framing Details indicate all connections are to be shop welded. Trusses and towers are to large to be completely shop welded. Indicate on plans locations of field splices and provide details for the field connections required.	08/04/2019 10:06 AM	Thakor Bhagwakar	Bolted connections are indicated at the north end of the bridge in detail 1 and 2 on S42-23 as well as on the south end of the bridge in details 1, 2, 3, 4a, and 5b. Additionally, web and chord splice details are included in detail 6/S42-29.
79	Structural (Consultant)	S20-21 TOWER BRIDGE ELEVATIONS D19024-01.pdf	Structural Comments	STC1706	STC1706 - Other plan correction comments. - Drawing S20-21 -Detail 1 Elevation at Grid bC - In many Tower/Bridge Elevations all members in plane have member sizes designated.. Provide complete framing plans with all member sizs as you did in the others..	08/04/2019 10:06 AM	Thakor Bhagwakar	This is updated in the drawings. Missing member size labels are added to the elevation.
106	Structural (Consultant)	S20-21 TOWER BRIDGE ELEVATIONS D19024-01.pdf	Structural Comments	STC1706	STC1706 - Other plan correction comments. - Drawing S20-21 - Detail 1 Elevation at grid bB. At Level 03 between columns lines b5 & b7 are 12 notes C10 tyo of 4 & HSS Typ of2 which are pointing to empty space. Align notes with members and show the channels as indicated.	08/04/2019 10:06 AM	Thakor Bhagwakar	This is updated.
242	Structural (Consultant)	S20-22 TOWER BRIDGE ELEVATIONS D19024-01.pdf	Structural Comments	STC1706	STC1706 - Other plan correction comments. - Drawing S20-22 - Detail 1 - Elevation at Grid bC - Level 01.5 at column lines b2, b3 & b4 indicate detail reference number.	08/07/2019 8:50 AM	Thakor Bhagwakar	This is updated.
77	Structural (Consultant)	S20-22 TOWER BRIDGE ELEVATIONS D19024-01.pdf	Structural Comments	STC1706	STC1706 - Other plan correction comments. Drawing S20-22 - Exist Col at 2221 - The exist column is in front of new tower/bridge framing. Showing it confuses the truss framing. Either provide a note the column is in front or remove it.	08/07/2019 8:50 AM	Thakor Bhagwakar	This is updated.
105	Structural (Consultant)	S20-22 TOWER BRIDGE ELEVATIONS D19024-01.pdf	Structural Comments	STC1706	STC1706 - Other plan correction comments. - Drawing S12-22 - Framing Details indicate all connections are to be shop welded. Trusses and towers are to large to be completely shop welded. Indicate on plans locations of field splices and provide details for the field connections required.	08/07/2019 8:50 AM	Thakor Bhagwakar	Bolted connections are indicated at the north end of the bridge in detail 1 and 2 on S42-23 as well as on the south end of the bridge in details 1, 2, 3, 4a, and 5b. Additionally, web and chord splice details are included in detail 6/S42-29.
104	Structural (Consultant)	S20-22 TOWER BRIDGE ELEVATIONS D19024-01.pdf	Structural Comments	STC1706	STC1706 - Other plan correction comments. - Drawing S42-24 - Detail 7 - Drawing S20-22 - Betweem column lines b7 & b8 at Level 3 is a callout for a WT4x29. Is this a viable member. I find no details. Remove if not use. If used, provide details.	08/07/2019 8:50 AM	Thakor Bhagwakar	The WT4X29 is shown in detail 2/S41-20. The section call out is added to the elevation to provide clarity.
78	Structural (Consultant)	S20-22 TOWER BRIDGE ELEVATIONS D19024-01.pdf	Structural Comments	STC1706	STC1706 - Other plan correction comments. - Drawing S20-22 -Detail 1 Elevation at Grid bC - In many Tower/Bridge Elevations all members in plane have member sizes designated.. Provide complete framing plans with all member sizs as you did in the others.	08/07/2019 8:50 AM	Thakor Bhagwakar	This is updated in the drawings. Missing member size labels are added to the elevation.
132	Structural (Consultant)	S20-22 TOWER BRIDGE ELEVATIONS D19024-01.pdf	Structural Comments	STC1706	STC1706 - Other plan correction comments. - Drawing S20-22 - Detail 1 Elevation at Grid bC - At Level 03 column lines b5 & b7 show N-S Bridge support posts down to Pl. Girder at El 35'-7". Provide connection details for post to Beidge Truss and 24" Plate Girder.	08/07/2019 8:50 AM	Thakor Bhagwakar	This is updated.
103	Structural (Consultant)	S42-22 TOWER STEEL CONNECTION DETAILS D19024-01.pdf	Structural Comments	STC1706	STC1706 - Other plan correction comments. Drawing S42-22 1. All details indicate everything is to be shop welded. Trusses and towers are too large to be fully assembled in the shop. Indicate on plans and elevations where field splices are to occur and provide field splice details. 2. Provide dimensions of the face of rectangular HSS members where they occur in the details shown. 3. In cases where small HSS msmbers are framing into larger HSS sections full pen welds are called out when perhaps a simple fillet weld would be adequate. Check full pen weld cases. 4. References to Details for members in another plane are incorrect. Check reference callouts. 5. Comments are typical all Truss Connection Detail sheets.	08/07/2019 9:39 AM	Thakor Bhagwakar	Bolted connections are indicated at the north end of the bridge in detail 1 and 2 on S42-23 as well as on the south end of the bridge in details 1, 2, 3, 4a, and 5b. Additionally, web and chord splice details are included in detail 6/S42-29.
240	Structural (Consultant)	S42-22 TOWER STEEL CONNECTION DETAILS D19024-01.pdf	Structural Comments	STC1706	STC1706 - Other plan correction comments. - Drawing S42-22 - Detail 11 - Show 3/4" column side plate in Detail and Section A-A.	08/07/2019 9:39 AM	Thakor Bhagwakar	This is updated in the drawings.
76	Structural (Consultant)	S42-22 TOWER STEEL CONNECTION DETAILS D19024-01.pdf	Structural Comments	STC1706	STC1706 - Other plan correction comments. - Drawing S42-22 - Detail 5 - Weld of HSS14x10 column to HSS 10x10 bottom chord. Fillet weld arrows are pointing to wrong tube side for fillet welds. Revise.	08/07/2019 9:39 AM	Thakor Bhagwakar	This is updated.
241	Structural (Consultant)	S42-22 TOWER STEEL CONNECTION DETAILS D19024-01.pdf	Structural Comments	STC1706	STC1706 - Other plan correction comments. - Drawing S42-22 - Detail 11 - Horizontal truss member is putting a large load on web of column. Add web stiffner plates across top & bottom of web plate gusset plate. - Also indicate depth of web/ horiz truss member gusset pate.	08/07/2019 9:39 AM	Thakor Bhagwakar	This information is added to the detail. See calculation in supplemental calculation package.
255	Architectural (Consultant)	A43-04 ENLARGED INT PLANS AND ELEVATIONS LEVEL 01 D19024-01.pdf	Architecture	AGG841	J Michael Kilpatrick 8/2/19, 5:13 PM Action For Discussion AGG841 Guardrails Clarify (with notes, dimensions, etc) heights of guardrails at Station Stair	08/05/2019 2:14 PM	J Michael Kilpatrick	Guardrail heights have been added to the drawing.
183	Structural (Consultant)	S11-14 STATION HOUSE MAIN ROOF PLAN D19024-01.pdf	Structural Comments	STC1706	STC1706 - Other plan correction comments. - Drawing S11-14 - Detail 1 - Station House - Main Roof South Plan - Column Line s1 between sP & sQ at the W12x30. Other beams in this line are W10x30. Check and revise size if required.	08/05/2019 6:16 PM	Thakor Bhagwakar	This is updated in the drawings.
188	Structural (Consultant)	S11-14 STATION HOUSE MAIN ROOF PLAN D19024-01.pdf	Structural Comments	STC1706	STC1706 - Other plan correction comments. - Drawing S11-14 - Detail 4 - Station House Platform Level North Plan - At North Edge of Platform is a Line that appears to be a MatchLine. If that is the case indicate Drawing where adjacent Drawing is located. If this is not a matchLine remove line.	08/05/2019 6:16 PM	Thakor Bhagwakar	This is updated.
185	Structural (Consultant)	S11-14 STATION HOUSE MAIN ROOF PLAN D19024-01.pdf	Structural Comments	STC1706	STC1706 - Other plan correction comments. - Drawing S11-14 - Detail 1 - Station House - Main Roof South Plan - Column line sJ, provide beam size.	08/05/2019 6:16 PM	Thakor Bhagwakar	This is updated.
187	Structural (Consultant)	S11-14 STATION HOUSE MAIN ROOF PLAN D19024-01.pdf	Structural Comments	STC1706	STC1706 - Other plan correction comments. - Drawing S11-14 - Detail 4 - Station House - Main roof north Plan - Column line s3 between sB and sC, provide beam size.	08/05/2019 6:16 PM	Thakor Bhagwakar	This is updated.
75	Structural (Consultant)	S11-14 STATION HOUSE MAIN ROOF PLAN D19024-01.pdf	Structural Comments	STC1706	STC1706 - Other plan correction comments. - Drawing S11-11 - Station House - Main Roof South Plan at Elevator - Indicate all Wall Elevations shown on Drawings S20-27 & S20-28 on Plan.	08/05/2019 6:16 PM	Thakor Bhagwakar	Wall elevations are shown in the core part plan on S30-17. If elevation marks are shown on the S11-10 series drawings, the plans are too cluttered and text overlaps
186	Structural (Consultant)	S11-14 STATION HOUSE MAIN ROOF PLAN D19024-01.pdf	Structural Comments	STC1706	STC1706 - Other plan correction comments. - Drawing S11-14 - Detail 1 Main Roof South Plan - At column s5-sM is notation LLA (Typ). What is meat by LLA.	08/05/2019 6:16 PM	Thakor Bhagwakar	LLA is indicated in the abbreviations list on S00-01 "Life Line Anchor."
182	Structural (Consultant)	S11-14 STATION HOUSE MAIN ROOF PLAN D19024-01.pdf	Structural Comments	STC1706	STC1706 - Other plan correction comments. - Drawing S11-14 - Detail 1 - Slab Type S-3 NLP - NLP for roofing is not per Chicago Code. It requires written approval. Submit the completed "Administrative Code Adjustment" form found on the City's web-site to the City for Approval. Submit Approved Form for review.	08/05/2019 6:16 PM	Thakor Bhagwakar	Approval is included in the G series drawings as well as in the Application folder on ProjectDox.
181	Structural (Consultant)	S11-14 STATION HOUSE MAIN ROOF PLAN D19024-01.pdf	Structural Comments	STC1706	STC1706 - Other plan correction comments. - Drawing S11-14 - Detail 4 - There are 4 Detail references 9/S42-10, 10/S42-10. These details reference framing on upper levels. Remove.	08/05/2019 6:16 PM	Thakor Bhagwakar	Detail 9 and 10 on S42-10 reference framing on the Station Main Roof level shown on S11-14 and need to be called out on this level.
184	Structural (Consultant)	S11-14 STATION HOUSE MAIN ROOF PLAN D19024-01.pdf	Structural Comments	STC1706	STC1706 - Other plan correction comments. - Drawing S11-14 - Detail 1 - Station House - Main Roof - On column line s1 between sF & sj are 2 beams W10x30. Calculations page 461 indicates these beams are to be W12x30. Check and revise as required.	08/05/2019 6:16 PM	Thakor Bhagwakar	W10x30 beams are acceptable in this location. They are loaded similarly to the W10x30 beams between sK and sL.

Changemarks Report

No.	Discipline	Sheet	Category	Code	Comment	Date	Reviewer	Response
178	Structural (Consultant)	S20-27 TOWER BRIDGE ELEVATIONS D19024-01.pdf	Structural Comments	STC1706	STC1706 - Other plan correction comments. - Drawing S20-27 - Detail 3 - Elevation ar Grid bM/sG.5 - Provide information where elevations of HSS 8x3x1/4 girts/struts and EP-4 Embed plates shown can be found.	08/05/2019 10:30 AM	Thakor Bhagwakar	This is updated.
128	Structural (Consultant)	S20-27 TOWER BRIDGE ELEVATIONS D19024-01.pdf	Structural Comments	STC1706	STC1706 - Other plan correction comments. Drawing S20-27 - Detail 2 - Elevation at Grid bL/sF - Column line s8 at EP2 indicate Detail 7/S41-21 is also applicable.	08/05/2019 10:30 AM	Thakor Bhagwakar	This is updated.
131	Structural (Consultant)	S20-27 TOWER BRIDGE ELEVATIONS D19024-01.pdf	Structural Comments	STC1706	STC1706 - Other plan correction comments. - Drawing S20-27 - Details 1, 2 & 3 - Indicate top of wall elevations for all walls (not only on column lines but between column lines.)	08/05/2019 10:30 AM	Thakor Bhagwakar	This is updated.
129	Structural (Consultant)	S20-27 TOWER BRIDGE ELEVATIONS D19024-01.pdf	Structural Comments	STC1706	STC1706 - Other plan correction comments. - Drawing S20-27 - Detail 3 - Elevation at Grid bM/sG.5 - Column line s8 alevels 3 & 4, indicate connection Detail number.	08/05/2019 10:30 AM	Thakor Bhagwakar	This is updated.
180	Structural (Consultant)	S20-27 TOWER BRIDGE ELEVATIONS D19024-01.pdf	Structural Comments	STC1706	STC1706 - Other plan correction comments. - Drawing S20-27 - Detail 1 - Elevation at Grid bK/sD On column Line sD at elevation above Level 04 is a HSS 4.5x0.375 diagonal hanger from High Roof Plan. Show hanger and indicate and/or provide connection detail.	08/05/2019 10:30 AM	Thakor Bhagwakar	This is updated.
130	Structural (Consultant)	S20-27 TOWER BRIDGE ELEVATIONS D19024-01.pdf	Structural Comments	STC1706	STC1706 - Other plan correction comments. - Drawing S20-27 - Detail 3 - Elevation at Grid bM/sG.5 - At Column line b5 Level 03 Detail 18/S42-28 does not appear to be the correct reference for this connection. Check and revise as required.	08/05/2019 10:30 AM	Thakor Bhagwakar	The reference is correct however it should be a section mark looking east in lieu of an area callout. This is updated in the drawings.
74	Structural (Consultant)	S20-27 TOWER BRIDGE ELEVATIONS D19024-01.pdf	Structural Comments	STC1706	STC1706 - Other plan correction comments. - Drawing S20-27 - Detail 3 - Title - Grid location appears to be Grid Line bM. Coordinate & revise.	08/05/2019 10:30 AM	Thakor Bhagwakar	This is updated.
179	Structural (Consultant)	S20-27 TOWER BRIDGE ELEVATIONS D19024-01.pdf	Structural Comments	STC1706	STC1706 - Other plan correction comments. - Drawing S20-27 - Detail 2 - Elevation at Grid bL/sF - At Column line s7 above Level 04 at HSS4.5 hanger indicate and/or provide connection detail.	08/05/2019 10:30 AM	Thakor Bhagwakar	This is updated.
127	Structural (Consultant)	S41-00 STEEL TYPICAL DETAILS D19024-01.pdf	Structural Comments	STC1706	STC1706 - Other plan correction comments. - Drawing S42-00 - Embeded Plate Schedule - Note1 - Clarify what is meant by supplemental wall reinforcement with additional #4 stirrups @ 3" spa. Provide a Detail to show what is meant or indicate a existing Detail explaining note.	08/04/2019 12:20 PM	Thakor Bhagwakar	Detail 5A on S41-00 is added to the drawings to clarify this note.
73	Structural (Consultant)	S41-00 STEEL TYPICAL DETAILS D19024-01.pdf	Structural Comments	STC1706	STC1706 - Other plan correction comments. - Drawing S41-00 - Detail % Embed Plate EP-6 - Calculations show a 6" dimension for "A". Revise Schedule.	08/04/2019 12:20 PM	Thakor Bhagwakar	This is updated.
174	Structural (Consultant)	S11-15 STATION HOUSE HIGH ROOF PLAN D19024-01.pdf	Structural Comments	STC1706	STC1706 - Other plan correction comments. - Drawing S11-15 - Station House - Top of Core Roof Plan at Elevator - Indicate all Wall Elevations shown on Drawings S20-27 & S20-28 on Plan.	08/05/2019 11:27 AM	Thakor Bhagwakar	Wall elevations are shown in the core part plan on S30-17. If elevation marks are shown on the S11-10 series drawings, the plans are too cluttered and text overlaps.
176	Structural (Consultant)	S11-15 STATION HOUSE HIGH ROOF PLAN D19024-01.pdf	Structural Comments	STC1706	STC1706 - Other plan correction comments. - Drawing S11-15 - Detail 1 - Station House - High Roof Plan - At Column line s8 between sG and sH provide a moment connection for MC10x25 to concrete wall.	08/05/2019 11:27 AM	Thakor Bhagwakar	The channel is continuous from s3.5 to east of s8. The anchorage to the concrete wall between s7 and s8 provides the moment continuity with the wall.
175	Structural (Consultant)	S11-15 STATION HOUSE HIGH ROOF PLAN D19024-01.pdf	Structural Comments	STC1706	STC1706 - Other plan correction comments. - Drawing S11-15 - Detail 1 - Station House - High Roof Plan - At sG.5 between walls is a beam with Note 5. I believe it should be Note 13. Check and revise as require.	08/05/2019 11:27 AM	Thakor Bhagwakar	This is updated.
167	Structural (Consultant)	S11-15 STATION HOUSE HIGH ROOF PLAN D19024-01.pdf	Structural Comments	STC1706	STC1706 - Other plan correction comments. - Drawing S11-15 - Detail 2 - Neither of the slabs shown are 2-way slabs. Check designs and revise as required.	08/05/2019 11:27 AM	Thakor Bhagwakar	The slabs were analyzed with the boundary conditions as shown in the drawings. The symbol is only indicating that the rebar is to be distributed both ways.
173	Structural (Consultant)	S11-15 STATION HOUSE HIGH ROOF PLAN D19024-01.pdf	Structural Comments	STC1706	STC1706 - Other plan correction comments. - Drawing S11-15 - Station House - High Roof Plan at Elevator - Indicate all Wall Elevations shown on Drawings S20-27 & S20-28 on Plan.	08/05/2019 11:27 AM	Thakor Bhagwakar	Wall elevations are shown in the core part plan on S30-17. If elevation marks are shown on the S11-10 series drawings, the plans are too cluttered and text overlaps.
177	Structural (Consultant)	S11-15 STATION HOUSE HIGH ROOF PLAN D19024-01.pdf	Structural Comments	STC1706	STC1706 - Other plan correction comments. - Drawing S11-15 - Detail 1 - Station House - High Roof Plan - At column sF-s5 is an "X" with a Note LLA. Typ. What does this symbol and the abbrevation indicate? Clarify.	08/05/2019 11:27 AM	Thakor Bhagwakar	LLA is indicated in the abbreviations list on S00-01 "Life Line Anchor."
232	Electrical (Consultant)	E10-21 LEVEL 02 AND LEVEL 05 POWER PLANS D19024-01.pdf	LN_E1	ELEQ04	ELEQ04 Provide/indicate escalator disconnecting switch identification including amperes, phase, voltage, feeders, and Nema type. 14E-1-110.22 14E-4-430.101, 14E-4-430.110.	08/07/2019 1:23 PM	Leonardo Nolledo	Added Note 5 on Dwg E10-21 and Note 11 on Dwg E10-20.
230	Electrical (Consultant)	E10-21 LEVEL 02 AND LEVEL 05 POWER PLANS D19024-01.pdf	LN_E1	ELA0000	ELA0000 Administrative Issues. Clarify Elev 2 DS shown on detail 3 level 5 elevator 2 power plan on this drawing, is also shown on drawing E11-16 detail 1 level 1.5 enlarged power plan north.	08/07/2019 1:23 PM	Leonardo Nolledo	Disc Sw is no longer requried since equipment was moved to lower level equipment room. Deleted the Level 5 disc switch.
53	Electrical (Consultant)	E10-21 LEVEL 02 AND LEVEL 05 POWER PLANS D19024-01.pdf	LN_E1	ELA0000	ELA0000 Administrative Issues. Clarify disconnect switch for elevator 1 both shown on detail No. 4 LEVEL 05 ELEVATOR 1 POWER PLAN and detail No. 5 LEVEL 02 ELEVATOR 1 CONTROL ROOM POWER PLAN.	08/07/2019 1:23 PM	Leonardo Nolledo	Disc Sw is no longer requried since equipment was moved to lower level equipment room. Deleted the Level 5 disc switch.
52	Electrical (Consultant)	E10-21 LEVEL 02 AND LEVEL 05 POWER PLANS D19024-01.pdf	LN_E1	ELEQ04	ELEQ04 Provide/indicate elevators disconnecting switch identification including amperes, phase, voltage, feeders, and Nema type. 14E-1-110.22 14E-4-430.101, 14E-4-430.110. Provide and/or show sheet number reference to other drawing details, info, schedules, diagrams, etc.	08/07/2019 1:22 PM	Leonardo Nolledo	Added Note to Dwg E10-21 and Note 11 on Dwg E60-15.
268	Electrical (Consultant)	E10-20 LEVEL 01 STATION HOUSE POWER PLAN D19024-01.pdf	LN_E1	ELEQ02	ELEQ02 Provide disconnecting means for electric water cooler, lockable in accordance with 110.25, 14E-4-422.30 & 31.	08/07/2019 3:23 PM	Leonardo Nolledo	Added Note 12 on Dwg E10-20.
267	Electrical (Consultant)	E10-20 LEVEL 01 STATION HOUSE POWER PLAN D19024-01.pdf	LN_E1	ELA0000	ELA0000 ADministrative Issues. Provide disconnects for each signs. 14E-6-600.6	08/07/2019 3:23 PM	Leonardo Nolledo	Added Note 4 on Dwg E60-04.
250	Electrical (Consultant)	E10-20 LEVEL 01 STATION HOUSE POWER PLAN D19024-01.pdf	LN_E1	ELA0000	ELA0000 Administrative Issues. Clarify notes 5 & 6 referenced to drawing E60-03.	08/07/2019 3:23 PM	Leonardo Nolledo	Corrected the reference to Dwg E60-04 on Dwg E10-20.
266	Electrical (Consultant)	E10-20 LEVEL 01 STATION HOUSE POWER PLAN D19024-01.pdf	LN_E1	ELM1431	ELM1431 Provide ground-fault circuit-interrupter (GFCI) protection for electric water cooler. 14E-4-22.5	08/07/2019 3:23 PM	Leonardo Nolledo	Added to Dwg E60-11 Panel N-PP1.
265	Electrical (Consultant)	E10-20 LEVEL 01 STATION HOUSE POWER PLAN D19024-01.pdf	LN_E1	ELM1431	ELM1431 Provide ground-fault circuit-interrupter (GFCI) protection for vending machines. 14E-4-22.5	08/07/2019 3:23 PM	Leonardo Nolledo	Added to Dwg E60-11 Panels N-PP1 and FECP.
51	Electrical (Consultant)	E10-20 LEVEL 01 STATION HOUSE POWER PLAN D19024-01.pdf	LN_E1	ELEQ04	ELEQ04 Provide/depict insight disconnect switch to all motors, heaters appliances, mechanical, plumbing and all other equipment (see symbols legend). Indicate disconnecting means identification including amperes, phase, voltage, feeders, and Nema type. 14E-1-110.22, 14E-4-422.30, 14E-4-424.19, 14E-4-430.101, 110. Provide and/or show sheet number reference to other drawing details, info, schedules, diagrams, etc. Typical all drawings.	08/07/2019 3:23 PM	Leonardo Nolledo	Revised Note 16 and 25 on Dwg E01-02. All other motors, for example, the elevator, escalator motors are shown on plans.
67	Structural (Consultant)	SD42-01 SUGGESTED CONSTRUCTION SEQUENCE D19024-01.pdf	Structural Comments	STC0001	STC0001 - Drawing SD42-01 - Detail 3 - Provide Drawings and Design Calculations for New Earth Retention System (ERS) shown. Drawings and calculations to be stamped by Licensed Structural Engineer.	08/01/2019 1:16 PM	Thakor Bhagwakar	See general note 1.D on S00-01 regarding deferred submittals and submitting to the building official "Deferred submittal items shall not be installed until the deferred submittal documents have been approved by the building official." See note SD00-00 General Note 1 and S00-01 Note 7.E.i regarding the delegated design of the Earth Retention System "Engineering shall be completed by a licensed Structural Engineer in the State of Illinois."
66	Structural (Consultant)	SD42-00 SUGGESTED CONSTRUCTION SEQUENCE D19024-01.pdf	Structural Comments	STC0001	STC0001 - Drawing SD42-00 - Detail 1 - If Micropiles shown were part of "Work Completed Under Advanced Underground Project" provide information on micropiles, diameter, wall thickness, grade, grout strength, additional rebar size and grade if any and depth micropiles were driven. Provide verification micropiles are adequate to support new loading from this Project.	08/01/2019 1:12 PM	Thakor Bhagwakar	Please see supplemental calculation package.
65	Structural (Consultant)	SD41-01 SHORING TOWER SECTIONS D19024-01.pdf	Structural Comments	STC0001	STC0001 - Drawing SD41-00 - Are CDOT Shoring Towers to be used or is the shoring tower shown here to be used? Coordinate Drawings with notes on SD00-00. If Shoring Tower shown is to be used provide design calculations for all members and connections shown on Drawing.	08/01/2019 1:06 PM	Thakor Bhagwakar	As discussed, shoring drawings are not included in the permit submission.
64	Structural (Consultant)	SD41-00 SHORING TOWER SECTIONS D19024-01.pdf	Structural Comments	STC0001	STC0001 - Drawing SD41-00 - Are CDOT Shoring Towers to be used or is the shoring tower shown here to be used? Coordinate Drawings with notes on SD00-00. If Shoring Tower shown is to be used provide design calculations for all members and connections shown on Drawing.	08/01/2019 5:19 PM	Thakor Bhagwakar	As discussed, shoring drawings are not included in the permit submission.
50	Electrical (Consultant)	E11-01 ENLARGED FLOOR PLAN ELECT UPS COMMUNICATION RMS D19024-01.pdf	LN_E1	EL:FC1790	ELFC1790 SWITCHBOARD ROOMS. Main switchboard room shall have 3-hour fire rating. 14E-2-230.70. Where equipment rated 800A or more that contains overcurrent devices personnel door shall be equipped with listed panic hardware. 14E-1-110-26(C)(3); 14E-4-408.11(c).	08/01/2019 1:03 PM	Leonardo Nolledo	The 3-hour rated walls and doors are required for High Rise Buildings or service rated over 1000 volts only per CEC 14E-2-230.70(A)(5) and 14E-2-110.30(A)(1). Panic hardware is provided and shown in the Architectural dwgs.
63	Structural (Consultant)	SD00-00 STRUCTURAL DEMOLITION AND SUGGEST SHORING NOTES D19024-01.pdf	Structural Comments	STC0001	STC0001 - Drawing SD00-00 - Structural Demolition and Suggested Shoring Notes. - General - Note 8 - Provide Earth Retention Drawings and Design Calculations stamped by a Liensed Structural Engineer for review at this time prior to issuance of Permit.	08/01/2019 11:46 AM	Thakor Bhagwakar	As discussed, shoring drawings are not included in the permit submission.
62	Structural (Consultant)	SD00-00 STRUCTURAL DEMOLITION AND SUGGEST SHORING NOTES D19024-01.pdf	Structural Comments	STC0001	STC0001 - Drawing SD00-00 - Structural Demolition and Suggested Shoring Notes - Shoring - Notes 2 & 3. - Provide all Drawings, Calculations and Documentation related to the CDOT Shoring Towers suggested to be used on this Project to verfy adequate support capacity of Tower being used at	08/01/2019 11:46 AM	Thakor Bhagwakar	As discussed, shoring drawings are not included in the permit submission.
61	Structural (Consultant)	S40-30 PLATFORM COLUMN DETAILS D19024-01.pdf	Structural Comments	STC1706	STC1706 - Other plan correction comments. - Drawing S40-30 - Detail 3 - Actually point to the grout holes.	08/01/2019 11:19 AM	Thakor Bhagwakar	This is updated.
60	Structural (Consultant)	S11-34A PLATFORM CANOPY EAST D19024-01.pdf	Structural Comments	STC1706	STC1706 - Other plan correction comments. - Drawing S11-34A - Detail 1 at Column Line p14 - Details 1/S42-11 & S42-10 do not appear to be applicable at this location. Revise references.	08/01/2019 10:36 AM	Thakor Bhagwakar	This is updated.
59	Structural (Consultant)	S60-30 PLATFORM CANOPY TYPICAL SECTION D19024-01.pdf	Structural Comments	STC1706	STC1706 - Other plan correction comments. - Drawing S60-30 - Detail 1 - Glass shown in Detail for roofing is not considered a structural. It requires writtenapproval. Submit the completed "Administrative Code Adjustment" form found on the City's web-site to the City for Approval. Submit Approved Form for review.	08/05/2019 1:12 PM	Thakor Bhagwakar	Section 5 on General Notes sheet S00-04 is added to provide minimum glass thickness.
58	Structural (Consultant)	S60-31 PLATFORM CANOPY STAIR SECTION D19024-01.pdf	Structural Comments	STC1706	STC1706 - Other plan correction comments. - Drawing S60-31 - Detail 1 - Glass shown in Detail for roofing is not considered a structural. It requires writtenapproval. Submit the completed "Administrative Code Adjustment" form found on the City's web-site to the City for Approval. Submit Approved Form for review.	08/01/2019 9:59 AM	Thakor Bhagwakar	Section 5 on General Notes sheet S00-04 is added to provide minimum glass thickness.
57	Structural (Consultant)	S41-40 PLATFROM PRECAST SOLUTIONS D19024-01.pdf	Structural Comments	STC1706	STC1706 - Other plan correction comments. - Drawing S41-40 - Precast Delegated Design Notes - Precast Erection Drawings, Panel Reinforcing and connections details and design calculations stamped by a Licensed Structural Engineer are required at this time for review before issuance on Building Permit.	08/01/2019 9:28 AM	Thakor Bhagwakar	See general note 1.D on S00-01 regarding deferred submittals and submitting to the building official "Deferred submittal items shall not be installed until the deferred submittal documents have been approved by the building official." See also General Note 7.E.I on S00-01 regarding platform plant precast concrete.

DESIGN BY:								
DRAWN BY:								
CHECKED BY:								
APPROVED BY:		01/27/2020	BUILDING PERMIT CORRECTIONS 1	PW	PW	PW		
CDOT/APPROVED BY:	NO.	DATE	REVISIONS	DES.	DRW.	CHK.	DCCO	CDOT

LICENSED ARCHITECT MARK RICHARD WALSH 001-016335 STATE OF ILLINOIS
PERKINS+WILL INC #184000338-0001 EXP. 11-30-2020

PERKINS+WILL
The Wrigley Building
410 North Michigan Ave.
Suite 1600
Chicago, IL 60611
t 312.755.0770
f 312.755.0775
www.perkinswill.com

CDOT
CHICAGO DEPARTMENT OF TRANSPORTATION
DIVISION OF ENGINEERING

154 N DAMEN AVE - DAMEN GREEN LINE STATION

CERTIFIED PLAN CORRECTIONS

CDOT PROJECT D-7-135 | DATE: 01/27/2020

SPEC. NO.
DRAWING NO. G40-22
REVISION NO.

Changemarks Report

71	Structural (Consultant)	S41-21 TOWER BRIDFE DETAILS D19024-01.pdf	Structural Comments	STC1706	STC1706 - Drawing S41-21 - Detail 8 - Hanger Rod Embed Plate Plan Detail - Complete note Wall Reinf. See	08/03/2019 9:54 AM	Thakor Bhagwakar	This is updated.		
88	Structural (Consultant)	S41-21 TOWER BRIDFE DETAILS D19024-01.pdf	Structural Comments	STC1706	STC1706 - Other plan correction comments. - Drawing S41-20 - Detail 4 - Drawing S41-21 - Detail 1 - Indicate channeel above floor is stair framing and refer to Detail 6/2b,20	08/03/2019 9:54 AM	Thakor Bhagwakar	This is updated.		
56	Structural (Consultant)	S41-21 TOWER BRIDFE DETAILS D19024-01.pdf	Structural Comments	STC1706	STC1706 - Other plan correction comments. - Drawing S41-21 - Detail 2 - Per Framing Plans and other Details tube shape is a HSS7x7x1/2. Revise.	08/03/2019 9:54 AM	Thakor Bhagwakar	This is updated.		
70	Structural (Consultant)	S12-20 TOWER BRIDGE PART PLANS D19024-01.pdf	Structural Comments	STC1706	STC1706 - Other plan correction comments. - Drawing 12-20 - Detail 1 - Tower/Bridge - Level 1.5 Partial Plan - Between column lines b6 & b7 Elevation View marks are overlaping. Move 2/S20-24 to column line b8.	08/04/2019 9:29 AM	Thakor Bhagwakar	This is updated.		
86	Structural (Consultant)	S12-20 TOWER BRIDGE PART PLANS D19024-01.pdf	Structural Comments	STC1706	STC1706 - Other plan correction comments. - Drawing S12-20 - Detail 2 - Tower Bridge - Level 2 Partial Plan. - Plans show a HSS 7x7x1/2 near column line bD indicate connection detail 4/S42-24 for column lines b2, b3, b4 and provide connection detail for outriggers at column lines b1, b6 & b7.	08/04/2019 9:29 AM	Thakor Bhagwakar	Section references are added to S12-20.		
102	Structural (Consultant)	S12-20 TOWER BRIDGE PART PLANS D19024-01.pdf	Structural Comments	STC1706	STC1706 - Other plan correction comments. - Drawing S12-20 - Framing Details indicate all connections are to be shop welded. Trusses and towers are to large to be completely shop welded. Indicate on plans locations of field splices and provide details for the field connections required.	08/04/2019 9:29 AM	Thakor Bhagwakar	Bolted connections are indicated at the north end of the bridge in detail 1 and 2 on S42-23 as well as on the south end of the bridge in details 1, 2, 3, 4a, and 5b. Additionally, web and chord splice details are included in detail 6/S42-29.		
87	Structural (Consultant)	S12-20 TOWER BRIDGE PART PLANS D19024-01.pdf	Structural Comments	STC1706	STC1706 - Other plan correction comments. - Drawing S41-20 - Detail 4 - Drawing S12-20 - Detail 2 - Tower/Bridge - Level 2 Partial Plan - At Column bC-b1 reference to detail 10/S42-21 is incorrect. Provide correct reference.	08/04/2019 9:29 AM	Thakor Bhagwakar	This is updated in the drawings.		
55	Structural (Consultant)	S12-20 TOWER BRIDGE PART PLANS D19024-01.pdf	Structural Comments	STC1706	STC1706 - Other plan correction comments. Drawing S12-20 - Detail 2 Tower/Bridge - Level 2 Partial Plan - Indicate channel size on HSS7x7x1/2 along column lines bB & bC shown in Sections & Details.	08/04/2019 9:29 AM	Thakor Bhagwakar	This is updated in the drawings.		
85	Structural (Consultant)	S12-20 TOWER BRIDGE PART PLANS D19024-01.pdf	Structural Comments	STC1706	STC1706 - Other plan correction comments. - Drawing S12-20 - Detail 2 - Tower/Bridge Level 2 Partial Plan - At column Line b7 is an Elevation cut which belongs at column line b8. Move to line b8, this will also overlap on member size.	08/04/2019 9:29 AM	Thakor Bhagwakar	This is updated.		
69	Structural (Consultant)	S12-20 TOWER BRIDGE PART PLANS D19024-01.pdf	Structural Comments	STC1706	STC1706 - Other plan correction comments. - Drawing S41-22 - Detail 1 Tower/Bridge - Level 1.5 Partial Plan - At column line b6 Section 1/41-22 shows a change in elevations. Indicate Slab type & T/Slab Elev for portion between column line b1 to b6.	08/04/2019 9:29 AM	Thakor Bhagwakar	This is updated.		
48	Structural (Consultant)	S11-32B PLATFORM PLATFORM FRAMING WEST D19024-01.pdf	Structural Comments	STC1706	STC1706 - Other plan correction comments. - Drawing S11-32B - Platform Level Framing Plan - West - If you are going to call out "(E) Track Stringer. Typ.", provide line work to show Track Stringer locations.	07/31/2019 5:36 PM	Thakor Bhagwakar	This is updated.		
47	Structural (Consultant)	S11-32B PLATFORM PLATFORM FRAMING WEST D19024-01.pdf	Structural Comments	STC1706	STC1706 - Other plan correction comments. - Drawing S11-32B - Platform Level Framing Plan - East - Platform Framing Plan Notes: - There are 2 notes labeled No. 7. Revise notes numbering.	07/31/2019 5:36 PM	Thakor Bhagwakar	Notes updated on S11-32B.		
45	Structural (Consultant)	S41-33 PLATFORM PLAN DETAILS D19024-01.pdf	Structural Comments	STC1706	STC1706 - Other plan correction comments. - Drawing S41-33 - Detail 2 - There is no Detail 10/S41-34. Provide correct reference or provide Detail.	08/04/2019 1:43 PM	Thakor Bhagwakar	Detail reference removed; correct reference is 5/S41-34, 6/S41-34, & 7/S41-34 as noted in note 4.		
43	Structural (Consultant)	S41-33 PLATFORM PLAN DETAILS D19024-01.pdf	Structural Comments	STC1706	STC1706 - Other plan correction comments. - Drawing S41-33 - Detail 3 - There is no Detail 10/S41-34. Provide correct reference or provide Detail.	08/04/2019 1:43 PM	Thakor Bhagwakar	Detail reference removed; correct reference is 5/S41-34, 6/S41-34, & 7/S41-34 as noted in note 4.		
44	Structural (Consultant)	S41-33 PLATFORM PLAN DETAILS D19024-01.pdf	Structural Comments	STC1706	STC1706 - Other plan correction comments. - Drawing S41-33 - Detail 3 - There is no Detail 11/S41-34. Provide correct reference or provide Detail.	08/04/2019 1:43 PM	Thakor Bhagwakar	Detail reference removed; correct reference is 5/S41-34, 6/S41-34, & 7/S41-34 as noted in note 4.		
46	Structural (Consultant)	S41-33 PLATFORM PLAN DETAILS D19024-01.pdf	Structural Comments	STC1706	STC1706 - Other plan correction comments. - Drawing S41-33 - Detail 2 - There is no Detail 11/S41-34. Provide correct reference or provide Detail.	08/04/2019 1:43 PM	Thakor Bhagwakar	Detail reference removed; correct reference is 5/S41-34, 6/S41-34, & 7/S41-34 as noted in note 4.		
39	Structural (Consultant)	S41-34 PLATFORM SECTIONS AND DETAILS D19024-01.pdf	Structural Comments	STC1706	STC1706 - Other plan correction comments. - Drawing S41-34 - Detail 2 - Weld of top 3/4" gusset plate to top flange of W36. Point weld arrow to gusset plate actually being welded to top flange.	07/31/2019 4:08 PM	Thakor Bhagwakar	Arrow in detail updated.		
40	Structural (Consultant)	S41-34 PLATFORM SECTIONS AND DETAILS D19024-01.pdf	Structural Comments	STC1706	STC1706 - Other plan correction comments. - Drawing S41-34 - Detail 2 - Where Detail is referenced from is Detail 1/S12-31. At location shown in 1/S12-31, W36 beam is framing into a BUB-1. Revise Title & Detail as required to include both connections to aW36 and a BUB-1 beam or provide separate details detail for each case.	07/31/2019 4:08 PM	Thakor Bhagwakar	Detail title updated to W36 TO BUB-1 MOMENT CONNECTION		
42	Structural (Consultant)	S41-34 PLATFORM SECTIONS AND DETAILS D19024-01.pdf	Structural Comments	STC1706	STC1706 - Other plan correction comments. - Drawing S41-34 - Detail 4 - If there is a side plate as shown in other details, shouldn't web connection of W36 to BUB-1 be similar to Detail 5 or 6/S41/34? - Review Detail as required.	07/31/2019 4:08 PM	Thakor Bhagwakar	Side plate added to detail with note referencing 3/S41-35 for slotted detail. 4/S41-34 is a shop welded moment connection; different than 5+6 on S41-34.		
41	Structural (Consultant)	S41-34 PLATFORM SECTIONS AND DETAILS D19024-01.pdf	Structural Comments	STC1706	STC1706 - Other plan correction comments. - Drawing S41-34 - Detail 2 - Label beam to which all elements are being attached. Label it W36 or BUB-1 or both.	07/31/2019 4:08 PM	Thakor Bhagwakar	This is updated.		
17	Electrical (Consultant)	E11-10 ENLARGED STATION HOUSE ROOM LIGHTING PLAN.pdf	LN_E1	ELX1395	ELX1395 Provide unit batteries for standby emergency illumination in the elevator car 14E-7-700.10. Typical all elevator cars.	07/31/2019 3:14 PM	Leonardo Nolledo	Added Note 12 on Dwg E60-15. Also, The Elevator Cab Lighting is connected to the emergency power system that is backed up by batteries. When the both electric utility services fail, the emergency power system provide battery backup power to Cab lighting. In addition, one cab light fixture will be provided with battery backup per Spec 142100 Par 2.07.D.e.		
38	Structural (Consultant)	S42-30 PLATFORM AND EXISTING STEEL CONNECTION DETAILS D19024-01.pdf	Structural Comments	STC1706	STC1706 - Other plan correction comments. - Drawing S42-30 - Sections 8 & (- There is no mention of Shim Plates on Drawing S41-32. Perhaps you meant S41-34. Provide correct Reference.	07/31/2019 2:41 PM	Thakor Bhagwakar	This is updated.		
37	Structural (Consultant)	S12-30 PLATFORM PART PLAN TYPICAL BAY D19024-01.pdf	Structural Comments	STC1706	STC1706 - Other plan correction comments. - Drawing S12-30 - Detail 1 - At Grid Line on right side of Section add member size.	08/01/2019 10:06 AM	Thakor Bhagwakar	This is updated.		
54	Structural (Consultant)	S12-30 PLATFORM PART PLAN TYPICAL BAY D19024-01.pdf	Structural Comments	STC1706	STC1706 - Other plan correction comments. - Drawing S12-30 - Detail 3 - Glass shown in Detail for roofing is not considered a structural. It requires writtenapproval. Submit the completed "Administrative Code Adjustment" form found on the City's web-site to the City for approval. Submit Approved Form for review.	08/01/2019 10:06 AM	Thakor Bhagwakar	Section 5 on General Notes sheet S00-04 is added to provide minimum glass thickness.		
36	Structural (Consultant)	S41-31 PLATFORM EXISTING BENT MODIFICATIONS D19024-01.pdf	Structural Comments	STC1706	STC1706 - Other plan correction comments. Drawing S41-31 Section 3 - To Clarify Section add "Grid Lines bB & bC" to title.	07/31/2019 2:03 PM	Thakor Bhagwakar	This information is shown in the detail.		
34	Structural (Consultant)	S41-31 PLATFORM EXISTING BENT MODIFICATIONS D19024-01.pdf	Structural Comments	STC1706	STC1706 - Other plan correction comments. - Drawing S41-31 - Section 2 - Note 2 - At bottom of note is the reference 1/S41-30. This seems to be out of place. remove if not needed. Clarify if used.	07/31/2019 2:03 PM	Thakor Bhagwakar	This is updated.		
35	Structural (Consultant)	S41-31 PLATFORM EXISTING BENT MODIFICATIONS D19024-01.pdf	Structural Comments	STC1706	STC1706 - Other plan correction comments. Drawing S41-31 Section 2 - To Clarify Section add "Grid Lines bB & bE" to title.	07/31/2019 2:03 PM	Thakor Bhagwakar	This information is shown in the detail.		
33	Structural (Consultant)	S41-20 TOWER STEEL CONNECTION DETAILS D19024-01.pdf	Structural Comments	STC0001	STC0001 - Drawing S42-20 - File Name for this Drawing is S41-20. A correct File Name already exists for Drawing S41-20. Correct File name for this Drawing on resubmittal.	08/03/2019 2:08 PM	Thakor Bhagwakar	This drawing has been resubmitted with the correct file name.		
101	Structural (Consultant)	S41-20 TOWER STEEL CONNECTION DETAILS D19024-01.pdf	Structural Comments	STC1706	STC1706 - Other plan correction comments. Drawing S42-20 1. All details indicate everything is to be shop welded. Trusses and towers are too large to be fully assembled in the shop. Indicate on plans and elevations where field splices are to occur and provide field splice details. 2. Provide dimensions of the face of rectangular HSS members where they occur in the details shown. 3. In cases where small HSS msmbers are framing into larger HSS sections full pen welds are called out when perhaps a simple fillet weld would be adequate. Check full pen weld cases. 4. References to Details for members in another plane are incorrect. Check reference callouts. 5. Comments are typical all Truss Connection Detail sheets.	08/03/2019 2:08 PM	Thakor Bhagwakar	Bolted connections are indicated at the north end of the bridge in detail 1 and 2 on S42-23 as well as on the south end of the bridge in details 1, 2, 3, 4a, and 5b. Additionally, web and chord splice details are included in detail 6/S42-29.		
32	Structural (Consultant)	S41-20 TOWER BRIDGE DETAILS D19024-01 .pdf	Structural Comments	STC1706	STC1706 - Other plan correction comments. - Drawing S41-20 - Detail 4 - What about Section 9/S41-20 is similar in this Detail? Clarify and coordinate Sections 4 & 9	08/04/2019 9:13 AM	Thakor Bhagwakar	The connection of wide flange beam to HSS below is similar.		
84	Structural (Consultant)	S41-20 TOWER BRIDGE DETAILS D19024-01 .pdf	Structural Comments	STC1706	STC1706 - Other plan correction comments. - Drawing S41-20 - Detail 6 - Detail 5/S41-20 shows a plate connection to a wide flange shape not an HSS section. That reference is not applicable here. Revise reference or provide correct detail.	08/04/2019 9:13 AM	Thakor Bhagwakar	This is updated in the drawings. Detail 5A is added to reflect this condition at an HSS member.		
82	Structural (Consultant)	S41-20 TOWER BRIDGE DETAILS D19024-01 .pdf	Structural Comments	STC1706	STC1706 - Other plan correction comments. - Drawing S41-20 - Detail 4 - Section Cut 5/S41-20 should be marked "Sim" as beam size is different than that noted in Detail 5/S41-20.	08/04/2019 9:13 AM	Thakor Bhagwakar	This is updated in detail 5/S41-20.		
83	Structural (Consultant)	S41-20 TOWER BRIDGE DETAILS D19024-01 .pdf	Structural Comments	STC1706	STC1706 - Other plan correction comments. - Drawing S41-20 - Detail 4 - Plans show a HSS 7x7x1/2 near column line bD with no Detail on how HSS section is connected to either the built columns on column lines b2, b3, b4 nor outriggers at column lines b1, b6 & b7. Show beam and column tops in this section. - Provide connection details for each case.	08/04/2019 9:13 AM	Thakor Bhagwakar	See detail 4/S42-24.		
125	Structural (Consultant)	S41-20 TOWER BRIDGE DETAILS D19024-01 .pdf	Structural Comments	STC1706	STC1706 - Other plan correction comments. - Drawing S41-20 - Detail 2 - Indicate Tee size for connection of beam to truss framing.	08/04/2019 9:13 AM	Thakor Bhagwakar	This is updated.		
68	Structural (Consultant)	S41-20 TOWER BRIDGE DETAILS D19024-01 .pdf	Structural Comments	STC1706	STC1706 - Other plan correction comments. - Drawing S41-20 Detail 8 - Provide sheet number where wall elevation locating Embed Plates can be found	08/04/2019 9:13 AM	Thakor Bhagwakar	Detail 1/S20-28		
126	Structural (Consultant)	S41-20 TOWER BRIDGE DETAILS D19024-01 .pdf	Structural Comments	STC1706	STC1706 - Other plan correction comments. - Drawing S41-20 - Detail 1 Several notes on framing plans refer to this Detail for framing dimensions. Provide framing dimensions.	08/04/2019 9:13 AM	Thakor Bhagwakar	This is updated.		
31	Structural (Consultant)	S11-32A PLATFORM PLATFORM FRAMING EAST D19024-01.pdf	Structural Comments	STC1706	STC1706 - Other plan correction comments. - Drawing S11-32A - Platform Level Framing Plan - East - If you are going to call out "(E) Track Stringer. Typ.", provide line work to show Track Stringer locati	07/31/2019 5:36 PM	Thakor Bhagwakar	This is updated.		
30	Structural (Consultant)	S11-32A PLATFORM PLATFORM FRAMING EAST D19024-01.pdf	Structural Comments	STC1706	STC1706 - Other plan correction comments. - Drawing S11-32A - Platform Level Framing Plan - East - Platform Framing Plan Notes: - There are 2 notes labeled No. 7. Revise notes numbering.	07/31/2019 5:36 PM	Thakor Bhagwakar	Notes updated on S11-32B.		
29	Structural (Consultant)	S21-41 BENT 19 ELEVATION D19024-01.pdf	Structural Comments	STC1706	STC1706 - Other plan correction comments. - Drawing S21-41 - Bent 19 Elevation - Isn'l Platform bracing above Girder similar to Detal 1/S41-32? Indicate applicable detail as on other bents.	07/31/2019 1:19 PM	Thakor Bhagwakar	This is updated.		
28	Structural (Consultant)	S21-41 BENT 19 ELEVATION D19024-01.pdf	Structural Comments	STC1706	STC1706 - Other plan correction comments. - Drawing S21-41 - Bent 19 Elevation Looking East - On left side of girder ther are 3 designations "(6) BOH" whih point to the web of the girder. Point to the connections where these notes are applicable.	07/31/2019 1:19 PM	Thakor Bhagwakar	The leaders are updated in the elevation. The leaders correctly point to the web of the existing bent. There are existing open bolt holes in the web, not at a connection. This appears to be where a member previously framed in but was removed.		

Changemarks Report

27	Structural (Consultant)	S21-40 FLOOR BEAM 01 ELEVATION D19024-01.pdf	Structural Comments	STC1706	STC1706 - Other plan correction comments. - Drawing S21-40 - Floor Beam 001 Elevation - Notes. - It appears by the notes that further designs and drawings for reinforcing beam due to the new imposed loadings is required. - Provide required Drawings & Design calculations stamped by a Licensed Structural Engineer at this time before Permit can be issued.	07/31/2019 11:37 AM	Thakor Bhagwakar	We removed this drawing from the structural drawings set. We evaluated the Lake Street Bridge structure and determined no additional strengthening is required.		
25	Structural (Consultant)	S21-29 FLOOR BEAM 02 ELEVATION D19024-01.pdf	Structural Comments	STC0001	STC0001 - File Name S21-29 is actually Drawing S21-39. - Revise File Name on next submission. - Is there an actual Drawing S21-29? If so, provide it. If not, see if you can get file name S21-39 deleted.	07/31/2019 11:35 AM	Thakor Bhagwakar	There is no drawings S21-29.		
26	Structural (Consultant)	S21-29 FLOOR BEAM 02 ELEVATION D19024-01.pdf	Structural Comments	STC1706	STC1706 - Other plan correction comments. - Drawing S21-39 - Floor Beam 02 Elevation - Notes. - It appears by the notes that further designs and drawings for reinforcing beam due to the new imposed loadings is required. - Provide required Drawings & Design calculations stamped by a Licensed Structural Engineer at this time before Permit can be issued.	07/31/2019 11:35 AM	Thakor Bhagwakar	We removed this drawing from the structural drawings set. We evaluated the Lake Street Bridge structure and determined no additional strengthening is required.		
19	Structural (Consultant)	S30-04 TYPICAL MICROPILE AND PILE CAP DETAILS D19024-01.pdf	Structural Comments	STC1706	STC1706 - Other plan correction comments. Drawing S30-04 - Detail 1 - Typical Micropile Detail - Center Rod in Micropile. Per GeoTech Report design the center rod is required for all micropiles and is be #9 Threadbar ASTM A615 (Grade 75). Revise note.	07/31/2019 10:26 AM	Thakor Bhagwakar	Micropile design is delegated to the Contractor. Maximum allowable axial compression in 9.625" dia. micropiles is governed by rock socket bearing (Ref. p. 100 of 111 in geotech report). Threadbar is not required to develop 295 kip axial compression; threadbar required for tension piles only. Reference delegated design submittal 133-02-00 + 133-02-01 Micropile Structural Calculations for MPD comments.		
22	Structural (Consultant)	S30-04 TYPICAL MICROPILE AND PILE CAP DETAILS D19024-01.pdf	Structural Comments	STC1706	STC1706 - Other plan correction comments. - Drawing S30-04 - Pile Delegated Design Notes - 7 Deferred Submittals - Note A - Pile Drawings & Design Calculations are required at this time before Permit can be issued. - If micropile designs noted in the GeoTech Report are to be used. GeoTech designs need to be stamped ay a Licensed Structural Engineer. If GeoTech designs are not to be used, provide new Designs stamped by a Licensed Structural Engineer. - Revise/Remove note.	07/31/2019 10:26 AM	Thakor Bhagwakar	See general note 1.D on S00-01 regarding deferred submittals and submitting to the building official "Deferred submittal items shall not be installed until the deferred submittal documents have been approved by the building official." See also General Note 7.E.a on S00-01 regarding micropiles.		
24	Structural (Consultant)	S30-04 TYPICAL MICROPILE AND PILE CAP DETAILS D19024-01.pdf	Structural Comments	STC1706	STC1706 - Other plan correction comments. - Drawing S30-04 - PC-4 Existing 4-Pile group. - Provide information on existing micropiles. Provide diameter, wall thickness, steel grade, grout strength, reinforcing size and grade and length of piles. - Provide design calculations or load tests indicating capacity of piles.	07/31/2019 10:26 AM	Thakor Bhagwakar	Please see supplemental calculation package.		
18	Structural (Consultant)	S30-04 TYPICAL MICROPILE AND PILE CAP DETAILS D19024-01.pdf	Structural Comments	STC1706	STC1706 - Other plan correction comments. Drawing S30-04 - Detail A - Typical Pile Cap EmbedmentDetail - Calculations in the GeoTech Report for design of the micropiles indicates a #9 Bar is required in each micropile to obtain allowable compression load noted in design calculations for new micropiles. Revise notes.	07/31/2019 10:26 AM	Thakor Bhagwakar	Micropile design is delegated to the Contractor. Maximum allowable axial compression in 9.625" dia. micropiles is governed by rock socket bearing (Ref. p. 100 of 111 in geotech report). Threadbar is not required to develop 295 kip axial compression; threadbar required for tension piles only. Reference delegated design submittal 133-02-00 + 133-02-01 Micropile Structural Calculations for MPD comments.		
23	Structural (Consultant)	S30-04 TYPICAL MICROPILE AND PILE CAP DETAILS D19024-01.pdf	Structural Comments	STC1706	STC1706 - Other plan correction comments. Drawing S30-04 - Pile Delegated Design Notes - 7. deferred Submittals - Note C. - Temporary earth retention system design drawings and calculations are required at this time before a Permit is issued. Provide required information. Revise/Remove note.	07/31/2019 10:26 AM	Thakor Bhagwakar	See general note 1.D on S00-01 regarding deferred submittals and submitting to the building official "Deferred submittal items shall not be installed until the deferred submittal documents have been approved by the building official." See note SD00-00 General Note 1 and S00-01 Note 7.E.i regarding the delegated design of the Earth Retention System "Engineering shall be completed by a licensed Structural Engineer in the State of Illinois."		
21	Structural (Consultant)	S30-04 TYPICAL MICROPILE AND PILE CAP DETAILS D19024-01.pdf	Structural Comments	STC1706	STC1706 - Other plan correction comments. - Drawing S30-04 - Pile Delegated Design Notes - 3. Materials - Note C - Geotech Report with design of micropile indicates Reinforcement material is to be ASTM A615 threadbar Gr.75. Revise note or provide designs using material listed.	07/31/2019 10:26 AM	Thakor Bhagwakar	Drawings specify higher grade than the calculations. Drawings are updated to reflect the lower grade as a minimum.		
20	Structural (Consultant)	S30-04 TYPICAL MICROPILE AND PILE CAP DETAILS D19024-01.pdf	Structural Comments	STC1706	STC1706 - Other plan correction comments. - Drawing S30-04 - Pile Delegated Design Notes - 1. General - Note B - Micropiles & temporary earth retention may be a delegated design but Drawings and design calculations are required for review at this before a Permit can be issued. Provide required Drawings and designcalculations all stamped by a Licensed Structural Engineer - Also revise note as required.	07/31/2019 10:26 AM	Thakor Bhagwakar	See general note 1.D on S00-01 regarding deferred submittals and submitting to the building official "Deferred submittal items shall not be installed until the deferred submittal documents have been approved by the building official." See note SD00-00 General Note 1 and S00-01 Note 7.E.i regarding the delegated design of the Earth Retention System "Engineering shall be completed by a licensed Structural Engineer in the State of Illinois."		
172	Structural (Consultant)	S30-15 STATION HOUSE CONCRETE DETAILS D19024-01.pdf	Structural Comments	STC1706	STC1706 - Other plan correction comments. - Drawing S30-15 - Detail 4 - Indicate are highlighted as "Wall Beyond".	08/05/2019 4:40 PM	Thakor Bhagwakar	This is updated.		
171	Structural (Consultant)	S30-15 STATION HOUSE CONCRETE DETAILS D19024-01.pdf	Structural Comments	STC1706	STC1706 - Other plan correction comments. - Drawing S30-15 - Detail 4 - Title overall appear to be more correct if it is "Section thru Stairs". Revise.	08/05/2019 4:40 PM	Thakor Bhagwakar	This is updated.		
13	Structural (Consultant)	S30-15 STATION HOUSE CONCRETE DETAILS D19024-01.pdf	Structural Comments	STC1706	STC1706 - Other plan correction comments. - Drawing S30-15 Section 1 - Is vertical wall reinforcing shown at Column Lines s4.5, sG.5 and sE.5 column reinforcing to be extended to 1'-0" below T/Treads? If so indicate reinforcing shown is col. bars.	08/05/2019 4:40 PM	Thakor Bhagwakar	Yes. This is updated.		
170	Structural (Consultant)	S30-15 STATION HOUSE CONCRETE DETAILS D19024-01.pdf	Structural Comments	STC1706	STC1706 - Other plan correction comments. - Drawing S30-15 - Detal 5 - Stair to Wall - Section Cut 2/S30-16 appears to be incorrect at this location. Section 2/30-16 is at level 01 and shows a grade beam. Section 5/S30-15 id cut near Level 1.5 no cross beams in this location. Revise.	08/05/2019 4:40 PM	Thakor Bhagwakar	This is updated.		
14	Structural (Consultant)	S30-15 STATION HOUSE CONCRETE DETAILS D19024-01.pdf	Structural Comments	STC1706	STC1706 - Other plan correction comments. - Drawing S30-15 - Section 2 - Indicate beam at Elev 10'-2-1/8" is CB24x24 shown in Section 1.	08/05/2019 4:40 PM	Thakor Bhagwakar	This is updated.		
12	Structural (Consultant)	S00-00 COVER SHEET D19024-01.pdf	Structural Comments	STC0001	STC0001 - Drawing S00-00 - Provide a Key Plan for project. Put Key Plan on each Drawing and highlight work areas being shown on Drawing.	07/30/2019 10:48 AM	Thakor Bhagwakar	Sufficient information is provided with project grids and the G-series drawings to determine location without a key plan.		
11	Structural (Consultant)	S00-00 COVER SHEET D19024-01.pdf	Structural Comments	STC0001	STC0001 - Drawing S00-00 - Provide a Geometry Plan with existing Track and Platform Structure grid line designations tied to new Station House, Bridge and North Structure grid lines. Drawing G30-00 in the 100% CTA Comment Review Set 01-03-2019, doesn't appear to adequately tie the various structures together.	07/30/2019 10:48 AM	Thakor Bhagwakar	G30-00 is the project geometry plan and is referenced in the structural drawings. Based on the project geometry on G30-00 and the requirements related to track clearances, there is sufficient geometric information.		
10	Structural (Consultant)	SM-01 SOIL MANAGEMENT PLAN D19024-01.pdf	Structural Comments	STC0001	STC0001 - Drawing SM-01 - Soil Management Plan - Is ERS (Earth Retention System) required to remove contaminated Soil shown on this Drawing? If so, provide ERS Plan and Detail Sheets along with Design Calculations for ERS shown. All Drawings and calculations are to be stamped by a Licensed Structural Engineer.	07/30/2019 10:06 AM	Thakor Bhagwakar	ERS sheet piling is a delegated design item to be designed by the contractor's engineer. Sheet piling for the retaining wall is included in the supplemental calculation package.		
8	Structural (Consultant)	S30-31 SITE RETAINING WALL SECTIONS AND DETAILS D19024-01.pdf	Structural Comments	STC1706	STC1706 - Other plan correction comments. - Drawing S30-31 Section 2. Footing is to be a minimum of 3'-6" below finished Grade. Revise Sections.	07/30/2019 9:59 AM	Thakor Bhagwakar	This is updated.		
9	Structural (Consultant)	S30-31 SITE RETAINING WALL SECTIONS AND DETAILS D19024-01.pdf	Structural Comments	STC0001	STC0001 - Drawing S30-31 - Sections 1 & 2. - Provide design calculations for ERS Sheet Piling shown as well as for the retaining wall.	07/30/2019 9:59 AM	Thakor Bhagwakar	See supplemental calculation package.		
7	Structural (Consultant)	S11-10 STATION HOUSE CAISSON PLAN D19024-01.pdf	Structural Comments	STC1706	STC1706 - Other plan correction comments. - Drawing S11-10 - Section Cut 4/S30-15 doesn't show anything about the caisson or caisson caps/grade beams. It may clarify caisson plan to remove section cut.	07/30/2019 2:25 PM	Thakor Bhagwakar	This is removed.		
6	Structural (Consultant)	S11-10 STATION HOUSE CAISSON PLAN D19024-01.pdf	Structural Comments	STC1706	STC1706 - Other plan correction comments. - Drawing S11-10. - Provide pains and design calculations for "Deep Water Detention Tank" for review. Review is required before Permit can be issued.	07/30/2019 2:25 PM	Thakor Bhagwakar	The water detention tank is no longer required for the project.		
5	Civil-Stormwater	C60-03 PROPOSED DRAINAGE AND UTILITY CONDITIONS D19024-01.pdf	stormwater2	SW0200	SW0200 Stormwater General Comment: This project is not regulated under the stormwater ordinance. The detention system can be removed from the design if desired. Upon completion of this revision, new drawings will need to be uploaded. Stormwater review can then be sealed.	07/26/2019 2:44 PM	Ben Stammis	The detention system has been removed from the project.		
254	Fire (Consultant)	A10-01 OVERALL LEVEL 01 PLAN D19024-01.pdf	Fire-DanK	FX0001	FX0001 - Sheet A10-01: This sheet, as well as many other A-sheets, is not readable, due to poor resolution/legibility.	08/07/2019 2:00 PM	Dan Kohnen	New files have been provided with the permit re-submit issuance. The files that are issued for for graphics only, have no revision clouds, and include the following sheets: G30-00, A20-02, A20-04. Other sheets are re-issued for graphics as well as permit corrections.		
1	MOPD-Accessibility	D19024-01 Building Permit Application.pdf	AC	AC	AC - Fill-out, print, sign, and date the latest MOPD project data sheet, (Revised date April 25, 2019), to determine compliance with the Chapter 18-11 of the Chicago Building Code and the ICC/ANSI A117.1-2003.(See attached lower left hand corner, for effective date). Please address the above and resubmit in ProjectDox for a complete Accessibility review.If you have difficulty finding the latest MOPD Form, please contact Mansoor Khan from MOPD at 312-744-4441 ASAP to receive a copy.You can also get it from the MOPD City Web site. (Make sure it includes date of awarded contract between Architect and Owner, and date for start of construction.	07/25/2019 4:12 PM	Chris Zafiris	The MOPD project data sheet has been uploaded.		
2	MOPD-Accessibility	D19024-01 Building Permit Application.pdf	AC	AC	AC - All Government funded projects are required to have a preliminary review meeting with MOPD prior to submitting for a permit with DOB. Due to size, scope, complexity of project involved, Architect to schedule an appointment for review of project with Accessibility Examiner Chris Zafiris by calling him at 312-744-7902 ASAP. Please bring with you the latest set of drawings uploaded in project Dox with you. Also bring with you copy of MOPD Form/s and copy of the permit application/s.	07/25/2019 4:12 PM	Chris Zafiris	A preliminary review meeting was held with MOPD and the minutes were attached to the original permit application section. The minutes are included with this permit re-submission.		
3	MOPD-Accessibility	D19024-01 Building Permit Application.pdf	AC	AC	AC - IF any previous meeting took place with MOPD such as a "Preliminary Review Meeting", then attach meeting minutes to MOPD form. Architect to write the permit set sheet numbers next to each meeting minute corrections for a faster and easier review to take place. Please re-upload in ProjectDox for a complete Accessibility review.	07/25/2019 4:12 PM	Chris Zafiris	The minutes of the preliminary meeting are attached to the MOPD form.		
4	MOPD-Accessibility	D19024-01 Building Permit Application.pdf	AC	AC	AC - As of 7-25 the corretions made 7-23- 2019 have not been addressed.	07/25/2019 4:12 PM	Chris Zafiris	The MOPD project data sheet has been uploaded.		

DESIGN BY:							
DRAWN BY:							
CHECKED BY:							
APPROVED BY:		01/27/2020	BUILDING PERMIT CORRECTIONS 1	PW	PW	PW	
CDOT/APPROVED BY:	NO.	DATE	REVISIONS	DES.	DRW.	CHK.	DCCO / CDOT

LICENSED ARCHITECT MARK RICHARD WALSH 001-016235 ILLINOIS EXP. 11-30-2020
PERKINS+WILL INC #184000338-0001

PERKINS+WILL
The Wrigley Building
410 North Michigan Ave.
Suite 1600
Chicago, IL 60611
t 312.755.0770
f 312.755.0775
www.perkinswill.com

CDOT CHICAGO DEPARTMENT OF TRANSPORTATION
DIVISION OF ENGINEERING

154 N DAMEN AVE - DAMEN GREEN LINE STATION

CERTIFIED PLAN CORRECTIONS

CDOT PROJECT D-7-135 | DATE: 01/27/2020

SPEC. NO.

DRAWING NO. **G40-23**

REVISION NO.

CITY OF CHICAGO

DEPARTMENT OF BUILDINGS

Certified Corrections Program
Professionals of Record Certification Statement

All licensed professionals that stamp the plans and make the Department of Buildings' requested code corrections must sign and seal this Certification.

Application Number: D19024-01

Project Address: 154 NORTH DAMEN AVENUE

Chicago, IL 60612

I hereby certify that I am the Professional of Record for this Project and to the best of my knowledge, I have personally made all requested code corrections to the plans sets as reflected on the attached correction sheet.

ARCHITECT:
Signature:
Printed Name: MARK WALSH
Address: 410 NORTH MICHIGAN AVENUE SUITE 1600 CHICAGO, ILLINOIS 60611
Dated: JANUARY 27, 2020

LICENSED ARCHITECT MARK RICHARD WALSH 001-016635 STATE OF ILLINOIS
EXP. 11-30-2020

STRUCTURAL ENGINEER:
Signature:
Printed Name: Terry McDonnell
Address: 135 S. LaSalle St, Suite 3800 Chicago, Illinois 60603
Dated: January 27, 2020

TERRENCE R. MCDONNELL STATE OF ILLINOIS AFFIX SEAL HERE 081-006132 LICENSED STRUCTURAL ENGINEER

HVAC CONSULTANT:
(PROFESSIONAL ENGINEER)
Signature:
Printed Name: Raymond J. Heitner
Address: 333 S Wabash Ave. #2901 Chicago IL 60604
Dated: January 27, 2020

RAYMOND J. HEITNER 062.035.147 REGISTERED PROFESSIONAL ENGINEER OF ILLINOIS

PLUMBING CONSULTANT:
(PROFESSIONAL ENGINEER)
Signature:
Printed Name: Raymond J. Heitner
Address: 333 S Wabash Ave. #2901 Chicago IL 60604
Dated: January 27, 2020

RAYMOND J. HEITNER 062.035.147 REGISTERED PROFESSIONAL ENGINEER OF ILLINOIS

PERMIT CORRECTION FORM

CHICAGO DEPARTMENT OF TRANSPORTATION
CITY OF CHICAGO

September 19, 2019

Department of Zoning
Zoning Administrator, City of Chicago
121 N. LaSalle St., Room 905
Chicago, IL 60602

RE: Chicago Department of Transportation
Damen Elevated CTA Green Line Station
154 N. Damen Avenue
Chicago, IL 60612
CDOT Project No.: D-7-135
DOB Permit Application No.: D-19024-01

To Whom it May Concern,

As a condition to the issuance of a Building Permit and Temporary Occupancy Certificate for the above referenced project, the Chicago Department of Transportation ("CDOT") agrees to complete the landscaping improvements ("Landscaping") that are required by the City of Chicago's Landscaping Ordinance, Section 17-5.13, in the time frame projected on the Landscaping Security and Right of Entry Agreement attached hereto, and in accordance with the approved landscaping plan for this Project.

If CDOT fails to substantially complete the Landscaping within 24 months following the date of the Building Permit, and such failure continues for 30 days after the City gives written notice of such failure to CDOT, CDOT agrees that the City will then have the right, but not the obligation, to enter onto the Project to complete (or cause to be completed) the Landscaping at CDOT's expense.

Give the aforementioned commitments listed above, and taking into consideration that this Project is entirely funded with City TIF dollars, CDOT hereby requests a fee waiver for the Landscape Deposit for the proposed intergovernmental Landscaping Improvements.

Sincerely,

Julian Silva
CDOT Project Manager

30 NORTH LASALLE STREET, SUITE 1100, CHICAGO, ILLINOIS 60602

LANDSCAPE WAIVER LETTER

DESIGN BY:									
DRAWN BY:									
CHECKED BY:									
APPROVED BY:			01/27/2020	BUILDING PERMIT CORRECTIONS 1	PW	PW	PW		
CDOT/APPROVED BY:		NO.	DATE	REVISIONS	DES.	DRW.	CHK.	DCCO	CDOT

LICENSED ARCHITECT MARK RICHARD WALSH 001-016635 STATE OF ILLINOIS
PERKINS+WILL INC #184000335-0001
EXP. 11-30-2020

PERKINS+WILL
The Wrigley Building
410 North Michigan Ave.
Suite 1600
Chicago, IL 60611
t 312.755.0770
f 312.755.0775
www.perkinswill.com

CDOT
CHICAGO DEPARTMENT OF TRANSPORTATION
DIVISION OF ENGINEERING

154 N DAMEN AVE - DAMEN GREEN LINE STATION

CERTIFIED PLAN CORRECTIONS

CDOT PROJECT D-7-135 | DATE: 01/27/2020

SPEC. NO.

DRAWING NO. G40-24

REVISION NO.

Changemarks Report

Project Name:	D19024-01 154 NORTH DAMEN AVENUE
Workflow Started:	07/25/2019 12:46 PM
Report Generated:	02/19/2020 09:16 AM

Grouping	Cycle	Ref #	Department	Snapshot	File	Markup Name	Changemark Subject	Changemark Details	Markup Date	Updated By	Applicant Response
Main Workflow	2	375	Structural (Consultant)		SD11-30A TRACK DEMOLITION AND SHORING PLAN EAST D19024-01.pdf	Cycle 2 - Structural Comments	STC1706	STC0001 - Drawing SD11-30A - Detail 1 - ERS System - There is no objection to "Deferred Design" with regards to the ERS system. The point is that information is required for review by the City at this time. - Without it or the shoring towers work on the Track stringers, girders, bents, columns, etc can not happen. Without the information any track work shown here would have to be noted "Not in Contract" or Under Separate Permit". - If you want to include Track Work in this Permit provide ERS information Drawings and calculations.	02/17/2020 8:53 AM	Thakor Bhagwakar	We understand this comment will remain open until the contractor is hired and completes the delegated design requirements.
		374	Structural (Consultant)		SD11-30B TRACK DEMOLITION AND SHORING PLAN WEST D19024-01.pdf	Cycle 2 - Structural Comments	Changemark #01	STC0001 - Drawing SD11-30B - Detail 1 - ERS System - There is no objection to "Deferred Design" with regards to the ERS system. The point is that information is required for review by the City at this time. - Without it or the shoring towers work on the Track stringers, girders, bents, columns, etc can not happen. Without the information any track work shown here would have to be noted "Not in Contract" or Under Separate Permit". - If you want to include Track Work in this Permit provide ERS information Drawings and calculations.	02/17/2020 8:53 AM	Thakor Bhagwakar	We understand this comment will remain open until the contractor is hired and completes the delegated design requirements.
		373	Structural (Consultant)		SM-01 SOIL MANAGEMENT PLAN D19024-01.pdf	Cycle 2 - Structural Comments	STC0001	STC0001 - Drawing SM-01 - ERS may be a delegated design but Drawimgs and Calculations are required now for review before Permit is issued. Provide all requiredinformation.	02/15/2020 1:01 PM	Thakor Bhagwakar	We understand this comment will remain open until the contractor is hired and completes the delegated design requirements.
		371	Structural (Consultant)		S30-04 TYPICAL MICROPILE AND PILE CAP DETAILS D19024-01.pdf	Cycle 2 - Structural Comments	STC1706	STC1706 - Other plan correction comments. - Drawing S30-04 - Pile Delegated Design Notes - 7 Deferred Submittals - Note A - Pile Drawings & Design Calculations are required at this time before Permit can be issued. - If micropile designs noted in the GeoTech Report are to be used. GeoTech designs need to be stamped ay a Licensed Structural Engineer. If GeoTech designs are not to be used, provide new Designs stamped by a Licensed Structural Engineer. - Revise/ Remove Note. Aall Drawings and Calculations listed must be submitted at this time for Permit to be issued.	02/15/2020 12:33 PM	Thakor Bhagwakar	We understand this comment will remain open until the contractor is hired and completes the delegated design requirements.
		367	Structural (Consultant)		S30-04 TYPICAL MICROPILE AND PILE CAP DETAILS D19024-01.pdf	Cycle 2 - Structural Comments	STC1706	STC1706 - Other plan correction comments. Drawing S30-04 - Detail A - Typical Pile Cap EmbedmentDetail - Calculations in the GeoTech Report for design of the micropiles indicates a #9 Bar is required in each micropile to develope 295K compression load noted in design calculations for new micropiles. Revise notes.	02/15/2020 12:33 PM	Thakor Bhagwakar	As noted in our previous comment responses "Micropile design is delegated to the Contractor. Maximum allowable axial compression in 9.625" dia. micropiles is governed by rock socket bearing (Ref. p. 100 of 111 in geotech report). Threadbar is not required to develop 295 kip axial compression; threadbar required for tension piles only. Reference delegated design submittal 133-02-00 + 133-02-01 Micropile Structural Calculations, for MP1 capacity. " Additionally, the note regarding thread bar material grade was updated with the Building Permit Corrections 1 drawings. See supplemental calculation showing rock socket bearing controls.
		368	Structural (Consultant)		S30-04 TYPICAL MICROPILE AND PILE CAP DETAILS D19024-01.pdf	Cycle 2 - Structural Comments	STC1706	STC1706 - Other plan correction comments. Drawing S30-04 - Detail 1 - Typical Micropile Detail - Center Rod in Micropile. Per GeoTech Report design the center rod is required to develope the maximum compression design load of 295K for all micropiles and is be #9 Threadbar ASTM A615 (Grade 75). Revise note.	02/15/2020 12:33 PM	Thakor Bhagwakar	As noted in our previous comment responses "Micropile design is delegated to the Contractor. Maximum allowable axial compression in 9.625" dia. micropiles is governed by rock socket bearing (Ref. p. 100 of 111 in geotech report). Threadbar is not required to develop 295 kip axial compression; threadbar required for tension piles only. Reference delegated design submittal 133-02-00 + 133-02-01 Micropile Structural Calculations, for MP1 capacity. " Additionally, the note regarding thread bar material grade was updated with the Building Permit Corrections 1 drawings. See supplemental calculation showing rock socket bearing controls.
		370	Structural (Consultant)		S30-04 TYPICAL MICROPILE AND PILE CAP DETAILS D19024-01.pdf	Cycle 2 - Structural Comments	STC1706	STC1706 - Other plan correction comments. Drawing S30-04 - Pile Delegated Design Notes - 7. deferred Submittals - Note C. - Temporary earth retention system design drawings and calculations are required at this time before a Permit ican be issued. Provide required information. Revise/Remove note.	02/15/2020 12:33 PM	Thakor Bhagwakar	We understand this comment will remain open until the contractor is hired and completes the delegated design requirements.
		369	Structural (Consultant)		S30-04 TYPICAL MICROPILE AND PILE CAP DETAILS D19024-01.pdf	Cycle 2 - Structural Comments	STC1706	STC1706 - Other plan correction comments. - Drawing S30-04 - Pile Delegated Design Notes - 1. General - Note B - Micropiles & temporary earth retention may be a delegated design but Drawings and design calculations are required for review at this before a Permit can be issued. Provide required Drawings and designcalculations all stamped by a Licensed Structural Engineer - Also revise note as rquired.	02/15/2020 12:33 PM	Thakor Bhagwakar	We understand this comment will remain open until the contractor is hired and completes the delegated design requirements.
		372	Structural (Consultant)		S30-04 TYPICAL MICROPILE AND PILE CAP DETAILS D19024-01.pdf	Cycle 2 - Structural Comments	STC1706	STC1706 - Other plan correction comments. - Drawing S30-04 - PC-4 Existing 4-Pile group. - Provide information on existing micropiles. Provide diameter, design load capacity on Drawing.	02/15/2020 12:33 PM	Thakor Bhagwakar	This information is available to the contractor by reference to CDOT project D-7-135A, notes in note 1D on S30-04.
		366	Structural (Consultant)		S21-39 FLOOR BEAM 02 ELEVATION D19024-01.pdf	Cycle 2 - Structural Comments	STC1706	STC1706 - Drawing S21-39 - Floor Beam 01 Elevation Looking East - If Drawing is removed from the set, then indicate that it is "Void" on Drawing.	02/15/2020 12:09 PM	Thakor Bhagwakar	This sheet is not removed. Only the sheet notes related were removed. This was clouded and tagged on the previous permit resubmission.
		365	Structural (Consultant)		S21-40 FLOOR BEAM 01 ELEVATION D19024-01.pdf	Cycle 2 - Structural Comments	STC1706	STC1706 - Drawing S21-40 - Floor Beam 01 Elevation Looking East - If Drawing is removed from the set then, indicate that it is "Void" on Drawing.	02/15/2020 12:06 PM	Thakor Bhagwakar	This sheet is not removed. Only the sheet notes related were removed. This was clouded and tagged on the previous permit resubmission.
		361	Structural (Consultant)		S41-20 TOWER BRIDGE DETAILS D19024-01.pdf	Cycle 2 - Structural Comments	STC1706	STC1706 - Drawing S41-20 Detail 8 - Provide sheet number where wall elevation locating Embed Plates can be found at end on Note on Drawing.	02/15/2020 11:02 AM	Thakor Bhagwakar	This is added to the detail.
		360	Structural (Consultant)		S12-30 PLATFORM PART PLAN TYPICAL BAY D19024-01.pdf	Cycle 2 - Structural Comments	STC1706	STC1706 - Drawing S12-30 - Platform - Detail 3 - How is Glass for side panels supported ? Architectural Drawings only hint at supporting glass? Is it to be designed by Structural Engineer or Glassing Manufacturer/Installer? - If glass is not supported by a continuous frame around entire glass panel but on point supports, Approval must be obtained from Committee on Standards and Tests. - Provide information, details or notes on Drawing. Obtain Approval as required.	02/15/2020 10:36 AM	Thakor Bhagwakar	Based on email correspondence between PW and Globetrotters, we understand this comment is resolved.
		359	Structural (Consultant)		S42-30 PLATFORM AND EXISTING STEEL CONNECTION DETAILS D19024-01.pdf	Cycle 2 - Structural Comments	STC1706	STC1706 - Other plan correction comments. - Drawing S42-30 - Sections 8 & 9 - There is no mention of Shim Plates on Drawing S41-32. Perhaps you meant S41-34. Provide correct Reference.	02/15/2020 10:30 AM	Thakor Bhagwakar	This note is removed. See updated drawing.

Changemarks Report

		358	Structural (Consultant)		S41-34 PLATFORM SECTIONS AND DETAILS D19024-01.pdf	Cycle 2 - Structural Comments	STC1706	STC1706 - Drawing S41-34 - Details 4, 5 & 6 - Side Plates on BUB-1 need to be continuous for BUB. Slotting to allow a beam web or gusset plate to pass through disrupts the section modulus of the BUB at this point. - Revise details so side plates are continuous.	02/15/2020 10:18 AM	Thakor Bhagwakar	See detail 3 on S41-35 for the weld detail between the shear connection plate and the BUB-1 side plate.
		357	Structural (Consultant)		S41-40 PLATFROM PRECAST SOLUTIONS D19024-01.pdf	STC0001	STC0001	STC0001 - Drawing SD41-40 - Precast Panels - There is no objection to "Deferred Design" with regards to the Precast panel system. The point is, that information is required for review by the City at this time. No designs, no Permit unless they are noted "Not in Permit" or "by a later Permit".	02/15/2020 9:15 AM	Thakor Bhagwakar	Based on email correspondence between PW and Globetrotters, we understand this comment is resolved.
		353	Structural (Consultant)		S60-31 PLATFORM CANOPY STAIR SECTION D19024-01.pdf	Cycle 2 - Structural Comments	STC1706	STC1706 - Drawing S60-31 - Stair Canopy - Detail 1 - How is Glass for roof supported ? Architectural Drawings only hint at supporting glass? Is it to be designed by Structural Engineer or Glassing Manufacturer/Installer? - If glass is not supported by a continuous frame around entire glass panel but above/below roof framing on point supports, Approval must be obtained from Committee on Standards and Tests. - Provide information, details or notes on Drawing. Obtain Approval as required.	02/15/2020 9:08 AM	Thakor Bhagwakar	Based on email correspondence between PW and Globetrotters, we understand this comment is resolved.
		352	Structural (Consultant)		S60-30 PLATFORM CANOPY TYPICAL SECTION D19024-01.pdf	Cycle 2 - Structural Comments	STC1706	STC1706 - Drawing S60-30 - Platform Canopy - Detail 1 - How is Glass for roof supported ? Architectural Drawings only hint at supporting glass? Is it to be designed by Structural Engineer or Glassing Manufacturer/Installer? - If glass is not supported by a continuous frame around entire glass panel but above/below roof framing on point supports, Approval must be obtained from Committee on Standards and Tests. - Provide information, details or notes on Drawing. Obtain Approval as required.	02/15/2020 9:07 AM	Thakor Bhagwakar	Based on email correspondence between PW and Globetrotters, we understand this comment is resolved.
		350	Structural (Consultant)		SD42-05 SUGGESTED CONSTRUCTION SEQUENCE D19024-01.pdf	Cycle 2 - Structural Comments	STC1706	STC1706 - Drawing SD42-01 - Details 15, 16 & 17 Indicate micropiles are "Existing".	02/17/2020 9:07 AM	Thakor Bhagwakar	Based on the previous meeting, the intent is to remove the SD drawings from the permit set.
		351	Structural (Consultant)		SD42-05 SUGGESTED CONSTRUCTION SEQUENCE D19024-01.pdf	Cycle 2 - Structural Comments	STC1706	STC1706 Drawing SD42-01 - Details 15 & 16 - If shoring Towers are not included in Permit then indicate Drawing is "Not in Permit" . Also note, all work requiring Shoring Towers can not be done and is "Not in Permit" or Under Separate Permit". - Indicate on all Drawings affected what work will no longer be in Permit or "Under Separate Permit". - If youl want to include Track Work in this Permit provide Shoring information Drawings and calculations.	02/17/2020 9:07 AM	Thakor Bhagwakar	Based on the previous meeting, the intent is to remove the SD drawings from the permit set.
		349	Structural (Consultant)		SD42-04 SUGGESTED CONSTRUCTION SEQUENCE D19024-01.pdf	Cycle 2 - Structural Comments	STc1706	STC1706 Drawing SD42-04 - Details 12, 13 & 14 - Indicate Shoring Towers are "Not in Permit".	02/15/2020 8:52 AM	Thakor Bhagwakar	Based on the previous meeting, the intent is to remove the SD drawings from the permit set.
		348	Structural (Consultant)		SD42-04 SUGGESTED CONSTRUCTION SEQUENCE D19024-01.pdf	Cycle 2 - Structural Comments	STC1706	STC1706 - Drawing SD42-04 - Details 12, 13 & 14 Indicate micropiles are "Existing".	02/15/2020 8:53 AM	Thakor Bhagwakar	Based on the previous meeting, the intent is to remove the SD drawings from the permit set.
		345	Structural (Consultant)		SD42-03 SUGGESTED CONSTRUCTION SEQUENCE D19024-01.pdf	Cycle 2 - Structural Comments	STC1706	STC1706 - Drawing SD42-03 - Details 9, 19 & 11 Indicate micropiles are "Existing"	02/17/2020 9:07 AM	Thakor Bhagwakar	Based on the previous meeting, the intent is to remove the SD drawings from the permit set.
		344	Structural (Consultant)		SD42-03 SUGGESTED CONSTRUCTION SEQUENCE D19024-01.pdf	Cycle 2 - Structural Comments	STC1706	STC1706 Drawing SD42-03 - Details 9, 10 & 11 - If shoring Towers are not included in Permit then indicate Drawing is "Not in Permit" . Also note, all work requiring Shoring Towers can not be done and is "Not in Permit" or Under Separate Permit". - Indicate on all Drawings affected what work will no longer be in Permit or "Under Separate Permit". - If youl want to include Track Work in this Permit provide Shoring information Drawings and calculations.	02/17/2020 9:07 AM	Thakor Bhagwakar	Based on the previous meeting, the intent is to remove the SD drawings from the permit set.
		347	Structural (Consultant)		SD42-02 SUGGESTED CONSTRUCTION SEQUENCE D19024-01.pdf	Cycle 2 - Structural Comments	STC1706	STC1708 Drawing SD42-02 - Details 6,7 & 8 - If shoring Towers are not included in Permit then indicate Drawing is "Not in Permit" . Also note, all work requiring Shoring Towers can not be done and is "Not in Permit" or Under Separate Permit". - Indicate on all Drawings affected what work will no longer be in Permit or "Under Separate Permit". - If youl want to include Track Work in this Permit provide Shoring information Drawings and calculations.	02/17/2020 9:06 AM	Thakor Bhagwakar	Based on the previous meeting, the intent is to remove the SD drawings from the permit set.
		346	Structural (Consultant)		SD42-02 SUGGESTED CONSTRUCTION SEQUENCE D19024-01.pdf	Cycle 2 - Structural Comments	STC1706	STC1706 - Drawing SD42-02 - Details 6, 7 & 8 Indicate micropiles are "Existing".	02/17/2020 9:06 AM	Thakor Bhagwakar	Based on the previous meeting, the intent is to remove the SD drawings from the permit set.
		342	Structural (Consultant)		SD00-00 STRUCTURAL DEMOLITION AND SUGGEST SHORING NOTES D19024-01.pdf	Cycle 2 - Structural Comments	STC0001	STC0001 - Drawing SD00-00 - General Note 8 - If shoring Towers are not included in Permit then all work requiring Shoring Towers can not be done until Permit is Obtained and is "Not in Permit" or "Under Separate Permit". - Indicate on all Drawings affected what work will no longer be in Permit but "Under Separate Permit".	02/17/2020 8:54 AM	Thakor Bhagwakar	Based on the previous meeting, the intent is to remove the SD drawings from the permit set.
		343	Structural (Consultant)		SD00-00 STRUCTURAL DEMOLITION AND SUGGEST SHORING NOTES D19024-01.pdf	Cycle 2 - Structural Comments	STC0001	STC0001 - Drawing SD00-00 - Shoring Notes 2 & 3. - If shoring Towers are not included in Permit then all work requiring Shoring Towers can not be done until Permit is Obtained and is "Not in Permit" or "Under Separate Permit". - Indicate on all Drawings affected what work will no longer be in Permit but "Under Separate Permit".	02/17/2020 8:54 AM	Thakor Bhagwakar	Based on the previous meeting, the intent is to remove the SD drawings from the permit set.
		341	Structural (Consultant)		SD41-01 SHORING TOWER SECTIONS D19024-01.pdf	Cycle 2 - Structural Comments	STC0001	STC0001 - Drawing SD41-01 - If shoring Towers are not included in Permit then indicate Drawing is "Not in Permit" . Also note, all work requiring Shoring Towers can not be done and is "Not in Permit" or Under Separate Permit". - Indicate on all Drawings affected what work will no longer be in Permit or "Under Separate Permit". - If youl want to include Track Work in this Permit provide Shoring information Drawings and calculations.	02/17/2020 9:04 AM	Thakor Bhagwakar	Based on the previous meeting, the intent is to remove the SD drawings from the permit set.
		340	Structural (Consultant)		SD41-00 SHORING TOWER SECTIONS D19024-01.pdf	Cycle 2 - Structural Comments	STC0001	STC0001 - Drawing SD41-00 - If shoring Towers are not included in Permit then indicate Drawing is "Not in Permit" . Also note, all work requiring Shoring Towers can not be done and is "Not in Permit" or Under Separate Permit". - Indicate on all Drawings affected what work will no longer be in Permit or "Under Separate Permit". - If youl want to include Track Work in this Permit provide Shoring information Drawings and calculations.	02/17/2020 9:08 AM	Thakor Bhagwakar	Based on the previous meeting, the intent is to remove the SD drawings from the permit set.

DESIGN BY:									
DRAWN BY:									
CHECKED BY:									
APPROVED BY:			03/18/20	BUILDING PERMIT CORRECTIONS 2	BS	JH	MW		
CDOT/APPROVED BY:		NO.	DATE	REVISIONS	DES.	DRW.	CHK.	DCCO	CDOT

LICENSED ARCHITECT MARK RICHARD WALSH 001-016635 STATE OF ILLINOIS
PERKINS+WILL INC #184000338-0001
EXP. 11-30-2020

PERKINS+WILL
The Wrigley Building
410 North Michigan Ave.
Suite 1600
Chicago, IL 60611
t 312.755.0770
f 312.755.0775
www.perkinswill.com

CDOT
CHICAGO DEPARTMENT OF TRANSPORTATION
DIVISION OF ENGINEERING

154 N DAMEN AVE - DAMEN GREEN LINE STATION

CERTIFIED PLAN CORRECTIONS

CDOT PROJECT D-7-135 | DATE: 03/18/20

SPEC. NO.

DRAWING NO. **G40-25**

REVISION NO.

Changemarks Report

376	Structural (Consultant)		SD41-00 SHORING TOWER SECTIONS D19024-01.pdf	Cycle 2 - Structural Comments	STC0001	STC0001 - Drawing SD41-00 - Detail 1 - ERS System - There is no objection to "Deferred Design" with regards to the ERS system. The point is that information is required for review by the City at this time. - Without it or the shoring towers work on the Track stringers, girders, bents, columns, etc can not happen. Without the information any track work shown here would have to be noted "Not in Contract" or Under Separate Permit". - If you want to include Track Work in this Permit provide ERS information Drawings and calculations.	02/17/2020 9:08 AM	Thakor Bhagwakar	Based on the previous meeting, the intent is to remove the SD drawings from the permit set.
339	Structural (Consultant)		SD42-00 SUGGESTED CONSTRUCTION SEQUENCE D19024-01.pdf	Cycle 2 - Structural Comments	STC1706	STC1706 - Drawing SD42-00 - Detail 1 - Indicate diameter and design load of micropiles previously installed.	02/15/2020 8:17 AM	Thakor Bhagwakar	Based on the previous meeting, the intent is to remove the SD drawings from the permit set.
354	Structural (Consultant)		SD42-01 SUGGESTED CONSTRUCTION SEQUENCE D19024-01.pdf	Cycle 2 - Structural Comments	STC0001	STC0001 - Drawing SD42-01 - Detail 3 - ERS System - There is no objection to "Deferred Design" with regards to the ERS system. The point is that information is required for review by the City at this time. - Without it or the shoring towers wol on the Track stringers, girders, bents, columns, etc can not happen. Without the information any track work shown here would have to be noted "Not in Contract" or "Under Separate Permit". - If you want to include Track Work in this Permit provide ERS information Drawings and calculations.	02/17/2020 9:05 AM	Thakor Bhagwakar	Based on the previous meeting, the intent is to remove the SD drawings from the permit set.
355	Structural (Consultant)		SD42-01 SUGGESTED CONSTRUCTION SEQUENCE D19024-01.pdf	Cycle 2 - Structural Comments	STC1706	STC1706 - Drawing SD42-01 - Details 1, 2 & 3 Indicate micropiles are "Existing".	02/17/2020 9:05 AM	Thakor Bhagwakar	Based on the previous meeting, the intent is to remove the SD drawings from the permit set.
356	Structural (Consultant)		SD42-01 SUGGESTED CONSTRUCTION SEQUENCE D19024-01.pdf	Cycle 2 - Structural Comments	STC1706	STC1706 Drawing SD42-01 - Details 2 & 3 - If shoring Towers are not included in Permit then indicate Drawing is "Not in Permit" . Also note, all work requiring Shoring Towers can not be done and is "Not in Permit" or Under Separate Permit". - Indicate on all Drawings affected what work will no longer be in Permit or "Under Separate Permit". - If you want to include Track Work in this Permit provide Shoring information Drawings and calculations.	02/17/2020 9:05 AM	Thakor Bhagwakar	Based on the previous meeting, the intent is to remove the SD drawings from the permit set.
336	Structural (Consultant)		S42-24 TOWER STEEL CONNECTION DETAILS D19024-01.pdf	Cycle 2 - Structural Comments	STC1706	STC1706 - Drawing S42-24 - Detail 13 - Provide an end closure plate for HSS7x7x1/2".	02/14/2020 11:17 AM	Thakor Bhagwakar	Closed section note 1A on S00-02 provides requirements for cap plates.
331	Structural (Consultant)		S20-24 TOWER BRIDGE ELEVATIONS D19024-01.pdf	Cycle 2 - Structural Comments	STC1706	STC1706 - Drawing S20-24 - Tower/Bridge - Elevations - Tower/Bridge is 68'-8" long x 8'-3" wide x 56'-0" in height. All connection details indicate shop fabrication. A structure this large can not be shipped in one piece. - Details for splices shown on Drawing S42-29 are for round HSS sections. Tower/Bridge is made up of rectangular HSS sections. Peovide splice Details for rectangular HSS shapes. - Indicate on plans prefered locations of splices or provide notes for Contractor and Fabricator to coordinate splice locations for ease in fabricating, shipping & erection.	02/14/2020 10:29 AM	Thakor Bhagwakar	See detail 1/S42-23 for additional information on rectangular HSS splices. Location of splices to accomodate shipping sizes are means and methods of the contractor. We do not show splice locations intentionally, as this defines means and methods of the contractor. One note on weld symbol field-weld flag: The lack of field weld symbol does not preclude the steel fabricator and erector from proposing field welds to facilitate means and methods of construction. As indicated in the general notes, these must be submitted to the SEOR for approval.
334	Structural (Consultant)		S20-23 TOWER BRIDGE ELEVATIONS D19024-01.pdf	Cycle 2 - Structural Comments	STC1706	STC1706 - Drawing S20-23 - Tower/Bridge - Elevations - Tower/Bridge is 68'-8" long x 8'-3" wide x 56'-0" in height. All connection details indicate shop fabrication. A structure this large can not be shipped in one piece. - Details for splices shown on Drawing S42-29 are for round HSS sections. Tower/Bridge is made up of rectangular HSS sections. Peovide splice Details for rectangular HSS shapes. - Indicate on plans prefered locations of splices or provide notes for Contractor and Fabricator to coordinate splice locations for ease in fabricating, shipping & erection.	02/14/2020 11:10 AM	Thakor Bhagwakar	See detail 1/S42-23 for additional information on rectangular HSS splices. Location of splices to accomodate shipping sizes are means and methods of the contractor. We do not show splice locations intentionally, as this defines means and methods of the contractor. One note on weld symbol field-weld flag: The lack of field weld symbol does not preclude the steel fabricator and erector from proposing field welds to facilitate means and methods of construction. As indicated in the general notes, these must be submitted to the SEOR for approval.
335	Structural (Consultant)		S20-23 TOWER BRIDGE ELEVATIONS D19024-01.pdf	Cycle 2 - Structural Comments	STC1706	STC1706 - Other plan correction comments. - Drawing S20-23 - Detail 1 - At Column bC - Level 02 show HSS7x7x1/2. As stated, this is an Elevation not a Section Cut. When Looking at an End Elevation of this column line would see this perpendicular HSS Section. Section Cut 13/S42-24 on S12-20 Level 2 Partial Plan verifies this condition. To clarify framing show the HSS section.	02/14/2020 11:10 AM	Thakor Bhagwakar	This is add to the detail.
332	Structural (Consultant)		S20-22 TOWER BRIDGE ELEVATIONS D19024-01.pdf	Cycle 2 - Structural Comments	STC1706	STC1706 - Drawing S20-22 - Tower/Bridge - Elevations - Tower/Bridge is 68'-8" long x 8'-3" wide x 56'-0" in height. All connection details indicate shop fabrication. A structure this large can not be shipped in one piece. - Details for splices shown on Drawing S42-29 are for round HSS sections. Tower/Bridge is made up of rectangular HSS sections. Peovide splice Details for rectangular HSS shapes. - Indicate on plans prefered locations of splices or provide notes for Contractor and Fabricator to coordinate splice locations for ease in fabricating, shipping & erection.	02/14/2020 10:31 AM	Thakor Bhagwakar	See detail 1/S42-23 for additional information on rectangular HSS splices. Location of splices to accomodate shipping sizes are means and methods of the contractor. We do not show splice locations intentionally, as this defines means and methods of the contractor. One note on weld symbol field-weld flag: The lack of field weld symbol does not preclude the steel fabricator and erector from proposing field welds to facilitate means and methods of construction. As indicated in the general notes, these must be submitted to the SEOR for approval.
330	Structural (Consultant)		S20-21 TOWER BRIDGE ELEVATIONS D19024-01.pdf	Cycle 2 - Structural Comments	STC1706	STC1706 - Drawing S20-21 - Tower/Bridge - Elevations - Tower/Bridge is 68'-8" long x 8'-3" wide x 56'-0" in height. All connection details indicate shop fabrication. A structure this large can not be shipped in one piece. - Details for splices shown on Drawing S42-29 are for round HSS sections. Tower/Bridge is made up of rectangular HSS sections. Peovide splice Details for rectangular HSS shapes. - Indicate on plans prefered locations of splices or provide notes for Contractor and Fabricator to coordinate splice locations for ease in fabricating, shipping & erection.	02/14/2020 10:24 AM	Thakor Bhagwakar	See detail 1/S42-23 for additional information on rectangular HSS splices. Location of splices to accomodate shipping sizes are means and methods of the contractor. We do not show splice locations intentionally, as this defines means and methods of the contractor. One note on weld symbol field-weld flag: The lack of field weld symbol does not preclude the steel fabricator and erector from proposing field welds to facilitate means and methods of construction. As indicated in the general notes, these must be submitted to the SEOR for approval.
338	Structural (Consultant)		S12-21 TOWER BRIDGE PART PLANS D19024-01.pdf	Cycle 2 - Structural Comments	STC1706	STC1706 - Drawing S12-21 - Tower Bridge - Details 1 & 3 - How is Glass for roof supported ? Architectural Drawings only hint at supporting glass? Is it to be designed by Structural Engineer or Glassing Manufacturer/Installer? - If glass is not supported by a continuous frame around entire glass panel but above roof framing on point supports, Approval must be obtained from Committee on Standards and Tests. - Provide information, details or notes on Drawing. Obtain Approval as required.	02/14/2020 1:32 PM	Thakor Bhagwakar	Based on email correspondence between PW and Globetrotters, we understand this comment is resolved.
337	Structural (Consultant)		S12-21 TOWER BRIDGE PART PLANS D19024-01.pdf	Cycle 2 - Structural Comments	STC1706	STC1706 - Drawing S12-21 - Tower/Bridge - Part Plan - Tower/Bridge is 68'-8" long x 8'-3" wide x 56'-0" in height. All connection details indicate shop fabrication. A structure this large can not be shipped in one piece. - Details for splices shown on Drawing S42-29 are for round HSS sections. Tower/Bridge is made up of rectangular HSS sections. Peovide splice Details for rectangular HSS shapes. - Indicate on plans prefered locations of splices or provide notes for Contractor and Fabricator to coordinate splice locations for ease in fabricating, shipping & erection.	02/14/2020 1:32 PM	Thakor Bhagwakar	See detail 1/S42-23 for additional information on rectangular HSS splices. Location of splices to accomodate shipping sizes are means and methods of the contractor. We do not show splice locations intentionally, as this defines means and methods of the contractor. One note on weld symbol field-weld flag: The lack of field weld symbol does not preclude the steel fabricator and erector from proposing field welds to facilitate means and methods of construction. As indicated in the general notes, these must be submitted to the SEOR for approval.

Changemarks Report

333	Structural (Consultant)		S12-20 TOWER BRIDGE PART PLANS D19024-01.pdf	Cycle 2 - Structural Comments	STC1706	STC1706 - Drawing S12-20 - Tower/Bridge - Part Plan - Tower/Bridge is 68'-8" long x 8'-3" wide x 56'-0" in height. All connection details indicate shop fabrication. A structure this large can not be shipped in one piece. - Details for splices shown on Drawing S42-29 are for round HSS sections. Tower/Bridge is made up of rectangular HSS sections. Peovide splice Details for rectangular HSS shapes. - Indicate on plans prefered locations of splices or provide notes for Contractor and Fabricator to coordinate splice locations for ease in fabricating, shipping & erection.	02/15/2020 11:13 AM	Thakor Bhagwakar	See detail 1/S42-23 for additional information on rectangular HSS splices. Location of splices to accomodate shipping sizes are means and methods of the contractor. We do not show splice locations intentionally, as this defines means and methods of the contractor. One note on weld symbol field-weld flag: The lack of field weld symbol does not preclude the steel fabricator and erector from proposing field welds to facilitate means and methods of construction. As indicated in the general notes, these must be submitted to the SEOR for approval.
362	Structural (Consultant)		S12-20 TOWER BRIDGE PART PLANS D19024-01.pdf	Cycle 2 - Structural Comments	STC1706	STC1706 - Drawing S12-20 - Detail 1 - Level 1.5 Partial Plan - At Column Line b6 move Section Cut so both Elevation View and Section Cut are legible.	02/15/2020 11:13 AM	Thakor Bhagwakar	This is updated in the drawing.
363	Structural (Consultant)		S12-20 TOWER BRIDGE PART PLANS D19024-01.pdf	Cycle 2 - Structural Comments	STC1706	STC1706 - Drawing S12-20 - Detail 2 - Level 2 At Column bC-b1 - 2 Section Cuts overlap. Move so both are legible.	02/15/2020 11:13 AM	Thakor Bhagwakar	This is updated in the drawing.
364	Structural (Consultant)		S12-20 TOWER BRIDGE PART PLANS D19024-01.pdf	Cycle 2 - Structural Comments	STC1706	STC1706 - Drawing S12-20 - Tower/Bridge - Level 2 Partial Plan - Along Column Line bC provide Detail/Section reference which shows connection of HSS7x7 to columns or outriggers.	02/15/2020 11:13 AM	Thakor Bhagwakar	3/S42-25 and 7/S42-22 are called out on S12-20 and show this information.
328	Structural (Consultant)		_2020-01-28_Supplemental Calculation for Permit Resubmit 1_TRM.pdf	Cycle 2 - Structural Comments	STC1706	STC1706 - Calculations 2020-01-28 page 169 - What is the analysis provided, there is no description? provide full description of project including panel size laminated thickness and hor panel is supported.	02/14/2020 9:03 AM	Thakor Bhagwakar	The sample glass analysis shown is for typical platform canopy glass with eight countersunk swivel point-fixings. Per the architectural drawings, glass panel geometry is 1828.80mm by 4419.60mm (6' wide by 14'-6" long). There are four point-fixings spacing at 124.46mm (4'-1") on center along each long side of the panel. Distance from center of fixing to edge of panel is typically 133.35mm (5 ¼"), 457.20mm (1'-6") along high point edge, and 228.60mm (9") along low point edge. We have considered two lites of 16mm (5/8") thick fully-tempered glass with one layer of 1.52mm (60 mil) thick SentryGlas Plus (SGP) ionoplast interlayer. Based on ASCE 7-05 load combinations and project specific design load criteria, we estimate the maximum working stress is approximately 3,263 psi at one of the point-fixing locations. Per ASTM E1300 and E2751, we obtained the allowable load resistance is 8,963 psi. The proposed glass panel is structurally adequate.
329	Structural (Consultant)		_2020-01-28_Supplemental Calculation for Permit Resubmit 1_TRM.pdf	Cycle 2 - Structural Comments	STC1706	STC1706 - Calculations 2020-01-28 page 170 - What is causing highest stress points at 8 locations along edges? How is glass supported? If hung from support steel, Approval by Committee on Standards and Test is required.	02/14/2020 9:03 AM	Thakor Bhagwakar	Based on email correspondence between PW and Globetrotters, we understand this comment is resolved.
325	Structural (Consultant)		S20-26 TOWER BRIDGE ELEVATIONS D19024-01.pdf	Cycle 2 - Structural Comments	STC1706	STC1706 - Drawing S20-26 - Tower Bridge Elevations - Bridge is 126'9" long x 14'-4" widex 13'-4" in height. All connection details indicate shop fabrication with the exception of splice details on S42-29. A structure this large can not be shipped in one piece. - Indicate on plans prefered locations of splices or provide notes for Contractor and Fabricator to coordinate splice locations for ease in fabricating, shipping & erection.	02/13/2020 2:59 PM	Thakor Bhagwakar	See detail 1/S42-23 for additional information on rectangular HSS splices. Location of splices to accomodate shipping sizes are means and methods of the contractor. We do not show splice locations intentionally, as this defines means and methods of the contractor. One note on weld symbol field-weld flag: The lack of field weld symbol does not preclude the steel fabricator and erector from proposing field welds to facilitate means and methods of construction. As indicated in the general notes, these must be submitted to the SEOR for approval.
324	Structural (Consultant)		S20-25 TOWER BRIDGE ELEVATIONS D19024-01.pdf	Cycle 2 - Structural Comments	STC1706	STC1706 - Drawing S20-25 - Tower Bridge Elevations - Bridge is 126'9" long x 14'-4" widex 13'-4" in height. All connection details indicate shop fabrication with the exception of splice details on S42-29. A structure this large can not be shipped in one piece. - Indicate on plans prefered locations of splices or provide notes for Contractor and Fabricator to coordinate splice locations for ease in fabricating, shipping & erection.	02/13/2020 2:58 PM	Thakor Bhagwakar	See detail 1/S42-23 for additional information on rectangular HSS splices. Location of splices to accomodate shipping sizes are means and methods of the contractor. We do not show splice locations intentionally, as this defines means and methods of the contractor. One note on weld symbol field-weld flag: The lack of field weld symbol does not preclude the steel fabricator and erector from proposing field welds to facilitate means and methods of construction. As indicated in the general notes, these must be submitted to the SEOR for approval.
326	Structural (Consultant)		S11-25 TOWER BRIDGE BRIDGE ROOF FRAMING PLAN D19024-01.pdf	Cycle 2 - Structural Comments	STC1706	STC1706 - Drawing S11-25 - Tower Bridge - Bridge is 126'-9" long x 14'-4" widex 13'-4" in height. All connection details indicate shop fabrication with the exception of splice details on S42-29. A structure this large can not be shipped in one piece. - Indicate on plans prefered locations of splices or provide notes for Contractor and Fabricator to coordinate splice locations for ease in fabricating, shipping & erection.	02/14/2020 8:46 AM	Thakor Bhagwakar	See detail 1/S42-23 for additional information on rectangular HSS splices. Location of splices to accomodate shipping sizes are means and methods of the contractor. We do not show splice locations intentionally, as this defines means and methods of the contractor. One note on weld symbol field-weld flag: The lack of field weld symbol does not preclude the steel fabricator and erector from proposing field welds to facilitate means and methods of construction. As indicated in the general notes, these must be submitted to the SEOR for approval.
327	Structural (Consultant)		S11-25 TOWER BRIDGE BRIDGE ROOF FRAMING PLAN D19024-01.pdf	Cycle 2 - Structural Comments	STC1706	STC1706 - Drawing S11-25 - Bridge Roof - How is Glass for roof Supported at centerline of truss? Architectural Drawings show glas support at edges, and only hint at purlins spaced along the length of the truss. Is there a ridge member supporting glass? Is it to be designed by Structural Engineer or Glassing Manufacturer/Installer? - Provide information, details or notes on Drawing.	02/14/2020 8:46 AM	Thakor Bhagwakar	Based on email correspondence between PW and Globetrotters, we understand this comment is resolved.
322	Structural (Consultant)		S11-24 TOWER BRIDGE BRIDGE FLOOR FRAMING PLAN D19024-01.pdf	Cycle 2 - Structural Comments	STC1706	STC1706 - Drawing S11-24 - Tower Bridge - Bridge is 126'-9" long x 14'-4" widex 13'-4" in height. All connection details indicate shop fabrication with the exception of splice details on S42-29. A structure this large can not be shipped in one piece. - Indicate on plans prefered locations of splices or provide notes for Contractor and Fabricator to coordinate splice locations for ease in fabricating, shipping & erection.	02/13/2020 2:55 PM	Thakor Bhagwakar	See detail 1/S42-23 for additional information on rectangular HSS splices. Location of splices to accomodate shipping sizes are means and methods of the contractor. We do not show splice locations intentionally, as this defines means and methods of the contractor. One note on weld symbol field-weld flag: The lack of field weld symbol does not preclude the steel fabricator and erector from proposing field welds to facilitate means and methods of construction. As indicated in the general notes, these must be submitted to the SEOR for approval.
323	Structural (Consultant)		S11-24 TOWER BRIDGE BRIDGE FLOOR FRAMING PLAN D19024-01.pdf	Cycle 2 - Structural Comments	STC1706	STC1706 - Drawing S11-24 - Framing Plan Notes Note for Floor Plates is covering Elevator Rail Support note. Move notes.	02/13/2020 2:55 PM	Thakor Bhagwakar	This is updated on the Drawings.

DESIGN BY:								
DRAWN BY:								
CHECKED BY:								
APPROVED BY:			03/18/20	BUILDING PERMIT CORRECTIONS 2	BS	JH	MW	
CDOT/APPROVED BY:		NO.	DATE	REVISIONS	DES.	DRW.	CHK.	DCCO	CDOT

LICENSED ARCHITECT MARK RICHARD WALSH 001-016535 STATE OF ILLINOIS
PERKINS+WILL INC #184000338-0001
EXP. 11-30-2020

PERKINS+WILL
The Wrigley Building
410 North Michigan Ave.
Suite 1600
Chicago, IL 60611
t 312.755.0770
f 312.755.0775
www.perkinswill.com

CDOT
CHICAGO DEPARTMENT OF TRANSPORTATION
DIVISION OF ENGINEERING

154 N DAMEN AVE - DAMEN GREEN LINE STATION

CERTIFIED PLAN CORRECTIONS

CDOT PROJECT D-7-135 | DATE: 03/18/20

SPEC. NO.

DRAWING NO. G40-26

REVISION NO.

DEPARTMENT OF BUILDINGS

Changemarks Report

321	Structural (Consultant)		S41-00 STEEL TYPICAL DETAILS D19024-01.pdf	Cycle 2 - Structural Comments	STC1706	STC1706 - Drawing S41-00 - Detail 5 - Concrete Embed Plate - Plate EP-7 has a horizontal shear load of 120k plus a tension load. Check stud requirements. Provide design calculations. - Also, check "A" it doesn't agree with number of bolts listed and size of plate. - Check and revise chart.	02/13/2020 1:12 PM	Thakor Bhagwakar	See calculation package supplement. There are 2 rows and 3 columns. Columns are spaced 6" apart horizontally ("B") and the two rows are spaced 12" apart vertically ("A").
319	MOPD-Accessibility		D19024-01 DGL MOPD Form and Minutes.pdf	AC	AC	AC - Architect to write the permit set sheet numbers next to each meeting minute corrections for a faster and easier review to take place. Please re-upload in ProjectDox for a complete Accessibility review.	02/11/2020 2:45 PM	Chris Zafiris	References are provided in the revised MOPD Form and Minutes File.
320	MOPD-Accessibility		D19024-01 DGL MOPD Form and Minutes.pdf	AC	AC	AC - Architect to write the permit set sheet numbers next to each meeting minute corrections for a faster and easier review to take place. Please re-upload in ProjectDox for a complete Accessibility review.	02/11/2020 2:45 PM	Chris Zafiris	References are provided in the revised MOPD Form and Minutes File.
317	MOPD-Accessibility		D19024-01 DGL MOPD Form and Minutes.pdf	AC	AC	AC - Architect to write the permit set sheet numbers next to each meeting minute corrections for a faster and easier review to take place. Please re-upload in ProjectDox for a complete Accessibility review.	02/11/2020 2:45 PM	Chris Zafiris	References are provided in the revised MOPD Form and Minutes File.
318	MOPD-Accessibility		D19024-01 DGL MOPD Form and Minutes.pdf	AC	AC	AC - Architect to write the permit set sheet numbers next to each meeting minute corrections for a faster and easier review to take place. Please re-upload in ProjectDox for a complete Accessibility review.	02/11/2020 2:45 PM	Chris Zafiris	References are provided in the revised MOPD Form and Minutes File.
316	Electrical (Consultant)		E11-16 ENLARGED LEVEL 1.5 NORTH POWER PLANS D19024-01.pdf	LN_E2	ELEQ04	ELEQ04 - Resubmitted drawing no. E11-16 has added Notes. Please provide complete and detailed electrical on plan(s) or on Electrical Equipment Schedule and indicate/include the disconnect switch size in amperes, including phase, voltage, Nema type, etc. for elevators, escalators and all other equipment. 14E-1-110.22; 14E-4-430.101; 14E-4-430.110 & 14E-2-215.5(B)(2) and 14E-6-620.51.	02/11/2020 12:38 PM	Leonardo Nolledo	Added Disconnect information to Dwg E11-16 and Dwg E60-15.
315	Electrical (Consultant)		E10-21 LEVEL 02 AND LEVEL 05 POWER PLANS D19024-01.pdf	LN_E2	ELEQ04	ELEQ04 - Resubmitted drawing no. E10-21 has added Notes. Please provide complete and detailed electrical on plan(s) or on Electrical Equipment Schedule and indicate/include the disconnect switch size in amperes, including phase, voltage, Nema type, etc. for elevators, escalators and all other equipment. 14E-1-110.22; 14E-4-430.101; 14E-4-430.110 & 14E-2-215.5(B)(2) and 14E-6-620.51.	02/11/2020 12:12 PM	Leonardo Nolledo	Added Disconnect information to Dwg E10-21.
314	Landscape		L10-00 LANSCAPE PLAN D19024-01.pdf	landscape	LN1050	LN1050 - SHOW PARKWAY TREES (existing and new) AND/OR PLANTER BOXES (existing and new) - for 10.8' wide sidewalk parkway trees supposed to be planted in 4'x10' tree pits w/ iron grates by the street curb (not by property line) and no setback from curb (6' sidewalk required to remain from property line for pedestrian traffic) & also update detail sheet L20.00 to show correct dimensions, otherwise provide official CDOT approval (talk to Jeff Brink 312-744-7844)	02/11/2020 11:25 AM	Leszek Ociepka	Per e-mail from Jeff Brink on 3/4/2020, this comment has been closed. E-mail correspondence: With public property on either side of the property line and considering the offset from the water main that lies adjacent to the curb, CDOT concurs with the placement of the parkway trees on the backside of the sidewalk. This layout will allow for very much needed parkway trees and suitable ADA access. Thank you Jeff
313	Electrical (Consultant)		E60-04 ELECTRICAL EQUIPMENT SCHEDULE D19024-01.pdf	LN_E2	ELEQ04	ELEQ04 - Resubmitted drawing no. E60-04 has added Notes. Please provide complete and detailed electrical on plan(s) or on Electrical Equipment Schedule and indicate/include the disconnect switch size in amperes, including phase, voltage, Nema type, etc. for all motors, heaters and all other equipment. 14E-1-110.22; 14E-4-430.101; 14E-4-430.110 & 14E-2-215.5(B)(2).	02/11/2020 11:15 AM	Leonardo Nolledo	Added Disconnect information to Equipment Schedule on Dwg E60-04.
312	Furnace-Vent (Consultant)		M60-01 MECHANICAL SCHEDULES D19024-01.pdf	Vent4	VG2405	VG2405 - Provide a Ventilation Schedule which includes the name and use of each space, the ordinance and actual volumes for both supply and exhaust and indicates which equipment provides ventilation to each room. (18-28-403.3 & .14) see sample vent schedule on plan examiner checklist on dcap website.	02/11/2020 9:50 AM	Philip Peterson	Vent Schedule was provided on M00-101.
311	Furnace-Vent (Consultant)		M11-01 ENLARGED MECHANICAL PLAN D19024-01.pdf	Vent3	VG2401	VG2401 - Drawing Requirements: Provide mechanical plans and label rooms on plans the same as in the ventilation schedule. (25-301)	02/11/2020 9:49 AM	Philip Peterson	Some plan backgrounds were missing, these have been reprinted with backgrounds in resubmitted drawings.
310	Furnace-Vent (Consultant)		M10-01 OVERALL LEVEL 01 MECHANICAL PLAN D19024-01.pdf	Vent2	VG2404	VG2404 - Drawing Requirements: Show all air inlets and outlets including outdoor discharge, combustion air intakes and flue-vents on the plans and indicate volumes (CFM). [25-304]. Typical all Plan and Section Drawings.	02/11/2020 9:40 AM	Philip Peterson	Air Inlets and outlets are labeled with air flow. This page (M10-01) is used to reference enlarged plans, all information is on enlarged plans.
309	Furnace-Vent (Consultant)		M00-01 MECH GENERAL NOTES SYMBOLS ABBREVIATIONS D19024-01.pdf	Vent1	VP2350	VP2350 - Examiner's Comments:(25-407) Add symbols from Plan Drawings to Symbols List.	02/11/2020 9:36 AM	Philip Peterson	Added ductwork symbols to symbol list.
308	Furnace-Vent (Consultant)		M10-01 OVERALL LEVEL 01 MECHANICAL PLAN D19024-01.pdf	Vent3	VG2401	VG2401 - Drawing Requirements: Provide mechanical plans and label rooms on plans the same as in the ventilation schedule. (25-301)	02/11/2020 9:32 AM	Philip Peterson	This page is used to reference enlarged plans, all informaion is on enlarged plans. Some areas are unconditioned.
307	Furnace-Vent (Consultant)		M11-01 ENLARGED MECHANICAL PLAN D19024-01.pdf	Vent2	VG2404	VG2404 - Drawing Requirements: Show all air inlets and outlets including outdoor discharge, combustion air intakes and flue-vents on the plans and indicate volumes (CFM). [25-304]. Comment is typical all Plans and Sections, all Exhaust Fans.	02/11/2020 9:27 AM	Philip Peterson	Air Inlets and outlets are labeled with air flow.
306	Furnace-Vent (Consultant)		M60-01 MECHANICAL SCHEDULES D19024-01.pdf	Vent1	VG2405	VG2405 - Provide a Ventilation Schedule which includes the name and use of each space, the ordinance and actual volumes for both supply and exhaust and indicates which equipment provides ventilation to each room. (18-28-403.3 & .14) see sample vent schedule on plan examiner checklist on dcap website.	02/11/2020 9:07 AM	Philip Peterson	Vent Schedule was provided on M00-101.

CITY OF CHICAGO
DEPARTMENT OF BUILDINGS

Certified Corrections Program
Professionals of Record Certification Statement

All licensed professionals that stamp the plans and make the Department of Buildings' requested code corrections must sign and seal this Certification.

Application Number: D19024-01

Project Address: 154 NORTH DAMEN AVENUE

Chicago, IL 60612

I hereby certify that I am the Professional of Record for this Project and to the best of my knowledge, I have personally made all requested code corrections to the plans sets as reflected on the attached correction sheet.

ARCHITECT:
Signature:
Printed Name: Mark Walsh
Address: 410 North Michigan Avenue Suite 1600 Chicago, IL 60611
Dated: March, 18, 2020

LICENSED ARCHITECT MARK RICHARD WALSH 001-016635 STATE OF ILLINOIS EXP. 11-30-2020

STRUCTURAL ENGINEER:
Signature:
Printed Name:
Address: 135 S. LaSalle St., Suite 3800, Chicago, IL
Dated: 24 March 2020

STATE OF ILLINOIS TERRY R. McDONNELL 081-0[illegible] LICENSED STRUCTURAL ENGINEER Exp. 11/30/2020

HVAC CONSULTANT:
(PROFESSIONAL ENGINEER)
Signature:
Printed Name: Raymond Heitner
Address: 750 Kromray Rd, Lemont, IL
Dated: 3/24/20

RAYMOND J. HEITNER 062.035147 REGISTERED PROFESSIONAL ENGINEER OF ILLINOIS

PLUMBING CONSULTANT:
(PROFESSIONAL ENGINEER)
Signature:
Printed Name: Raymond Heitner
Address: 750 Kromray Rd, Lemont, IL
Dated: 3/24/20

RAYMOND J. HEITNER 062.035147 REGISTERED PROFESSIONAL ENGINEER OF ILLINOIS

PERMIT CORRECTION FORM

DESIGN BY:									
DRAWN BY:									
CHECKED BY:									
APPROVED BY:			03/18/20	BUILDING PERMIT CORRECTIONS 2	BS	JH	MW		
CDOT/APPROVED BY:		NO.	DATE	REVISIONS	DES.	DRW.	CHK.	DCCO	CDOT

LICENSED ARCHITECT MARK RICHARD WALSH 001-016635 STATE OF ILLINOIS EXP. 11-30-2020
PERKINS+WILL INC #184000338-0001

PERKINS+WILL
The Wrigley Building
410 North Michigan Ave.
Suite 1600
Chicago, IL 60611
t 312.755.0770
f 312.755.0775
www.perkinswill.com

CDOT
CHICAGO DEPARTMENT OF TRANSPORTATION
DIVISION OF ENGINEERING

154 N DAMEN AVE - DAMEN GREEN LINE STATION

CERTIFIED PLAN CORRECTIONS

CDOT PROJECT D-7-135 | DATE: 03/18/20

SPEC. NO.

DRAWING NO. G40-27

REVISION NO.

CITY OF CHICAGO
DEPARTMENT OF BUILDINGS

Changemarks Report

Project Name: D19024-01 154 NORTH DAMEN AVENUE

Workflow Started: 07/25/2019 12:46 PM

Report Generated: 04/07/2020 08:47 AM

Grouping	Cycle	Ref #	Complete?	Department	Snapshot	File	Markup Name	Changemark Subject	Changemark Details	Markup Date	Updated By	Applicant Response
Main Workflow	1											
	2											
	3	391	False	Structural (Consultant)		SM-01 SOIL MANAGEMENT PLAN D19024-01.pdf	Cycle 3 - Structural Comments	STC1706	STC0001 - Drawing SM-01 - ERS may be a delegated design but Drawimgs and Calculations are required now for review before Permit is issued. - Calculations provided to date are for Small Retaining Wall in Northwest Corner and around Pile Caps after soilremediation Provide all required calculations and Drainge for ERS required on this Drawing SM-01 or indicate Drawing is "Void" and remove from set.	03/31/2020 10:35 AM	Thakor Bhagwakar	We understand this comment will remain open until the contractor is hired and completes the delegated design requirements.
		390	False	Structural (Consultant)		S21-40 FLOOR BEAM 01 ELEVATION D19024-01.pdf	Cycle 3 - Structural Comments	STC1706	STC1706 - Drawing 21-40 - If Drawing is to be removed from this Permit Set, indicate Drawing is "Void"	03/31/2020 10:05 AM	Thakor Bhagwakar	Drawing has been indicated as VOID.
		389	False	Structural (Consultant)		S21-39 FLOOR BEAM 02 ELEVATION D19024-01.pdf	Cycle 3 - Structural Comments	STC1706	STC1706 - Drawing S21-39 - If Drawing is to be removed from this Permit Set, indicate Drawing is "Void"	03/31/2020 10:03 AM	Thakor Bhagwakar	Drawing has been indicated as VOID.
		388	False	Structural (Consultant)		SD42-03 SUGGESTED CONSTRUCTION SEQUENCE D19024-	Cycle 3 - Structural Comments	STC1706	STC1706 - Drawing SD42-03 - If Drawing is to be removed from this Permit Set, indicate Drawing is "Void"	03/31/2020 7:29 AM	Thakor Bhagwakar	Drawing has been indicated as VOID.
		387	False	Structural (Consultant)		SD42-02 SUGGESTED CONSTRUCTION SEQUENCE D19024-	Cycle 3 - Structural Comments	STC1706	STC1706 - Drawing SD42-02 - If Drawing is to be removed from this Permit Set, indicate Drawing is "Void"	03/31/2020 7:26 AM	Thakor Bhagwakar	Drawing has been indicated as VOID.
		386	False	Structural (Consultant)		SD42-01 SUGGESTED CONSTRUCTION SEQUENCE D19024-	Cycle 3 - Structural Comments	STC1706	STC1706 - Drawing SD42-01 - If Drawing is to be removed from this Permit Set, indicate Drawing is "Void"	03/31/2020 7:24 AM	Thakor Bhagwakar	Drawing has been indicated as VOID.
		385	False	Structural (Consultant)		SD42-04 SUGGESTED CONSTRUCTION SEQUENCE D19024-	Cycle 3 - Structural Comments	STC1706	STC1706 - Drawing SD42-04 - If Drawing is to be removed from this Permit Set, indicate Drawing is "Void"	03/30/2020 3:56 PM	Thakor Bhagwakar	Drawing has been indicated as VOID.
		384	False	Structural (Consultant)		SD42-05 SUGGESTED CONSTRUCTION SEQUENCE D19024-	Cycle 3 - Structural Comments	STC1706	STC1706 - Drawing SD42-05 - If Drawing is to be removed from this Permit Set, indicate Drawing is "Void"	03/30/2020 3:53 PM	Thakor Bhagwakar	Drawing has been indicated as VOID.
		383	False	Structural (Consultant)		SD42-00 SUGGESTED CONSTRUCTION SEQUENCE D19024-	Cycle 3 - Structural Comments	STC1706	STC1706 - Drawing SD42-00 - If Drawing is to be removed from this Permit Set, indicate Drawing is "Void"	03/30/2020 3:52 PM	Thakor Bhagwakar	Drawing has been indicated as VOID.
		382	False	Structural (Consultant)		SD41-01 SHORING TOWER SECTIONS D19024-01.pdf	Cycle 3 - Structural Comments	ST1706	STC1706 - Drawing SD41-01 - If Drawing is to be removed from this Permit Set, indicate Drawing is "Void".	03/31/2020 7:17 AM	Thakor Bhagwakar	Drawing has been indicated as VOID.
		381	False	Structural (Consultant)		SD41-00 SHORING TOWER SECTIONS D19024-01.pdf	Cycle 3 - Structural Comments	STC1706	STC1706 - Drawing SD41-00 - If Drawing is to be removed from this Permit Set, indicate Drawing is "Void".	03/31/2020 7:17 AM	Thakor Bhagwakar	Drawing has been indicated as VOID.
		380	False	Structural (Consultant)		SD11-30B TRACK DEMOLITION AND SHORING PLAN WEST D19024-01.pdf	Cycle -3 Structural Comments	STC1706	STC1706 - Drawing SD11-30B - If Drawing is to be removed from this Permit Set, indicate Drawing is "Void".	03/31/2020 7:16 AM	Thakor Bhagwakar	Drawing has been indicated as VOID.
		379	False	Structural (Consultant)		SD11-30A TRACK DEMOLITION AND SHORING PLAN EAST D19024-01.pdf	Cycle - 3 Structural Cpmments	STC1706	STC1706 - Drawing SD11-30A - If Drawing is to be removed from this Permit Set, indicate Drawing is "Void".	03/31/2020 7:15 AM	Thakor Bhagwakar	Drawing has been indicated as VOID.
		378	False	Structural (Consultant)		SD11-20 SUGGESTED BRIDGE ERECTION SEQUENCE D19024-	Cycle 3 - Structural Comments	STC1706	STC1706 - Drawing SD11-20 - If Drawing is to be removed from this Permit Set, indicate Drawing is "Void".	03/31/2020 7:14 AM	Thakor Bhagwakar	Drawing has been indicated as VOID.
		377	False	Structural (Consultant)		SD00-00 STRUCTURAL DEMOLITION AND SUGGEST SHORING	Cycle 3 - Structural Comments	STC1706	STC1706 - Drawing SD00-00 - If Drawing is to be removed from this Permit Set, indicate Drawing is "Void".	03/31/2020 7:13 AM	Thakor Bhagwakar	Drawing has been indicated as VOID.

CITY OF CHICAGO
DEPARTMENT OF BUILDINGS

Certified Corrections Program
Professionals of Record Certification Statement

All licensed professionals that stamp the plans and make the Department of Buildings' requested code corrections must sign and seal this Certification.

Application Number: D19024-01

Project Address: 154 NORTH DAMEN AVENUE

Chicago, IL 60612

I hereby certify that I am the Professional of Record for this Project and to the best of my knowled
I have personally made all requested code corrections to the plans sets as reflected on the attach
correction sheet.

ARCHITECT:
Signature:
Printed Name:
Address:
Dated:
AFFIX SEAL HERE

STRUCTURAL ENGINEER:
Signature:
Printed Name: Eric J. Twomey
Address: 135 S LaSalle St, Suite 3800, Chicago IL 60603
Dated: 24 April 2020
ERIC J. TWOMEY 081.007709 LICENSED STRUCTURAL ENGINEER STATE OF ILLINOIS

HVAC CONSULTANT:
(PROFESSIONAL ENGINEER)
Signature:
Printed Name:
Address:
Dated:
AFFIX SEAL HERE

PLUMBING CONSULTANT:
(PROFESSIONAL ENGINEER)
Signature:
Printed Name:
Address:
Dated:
AFFIX SEAL HERE

CITY OF CHICAGO
DEPARTMENT OF BUILDINGS

Certified Corrections Program
Professionals of Record Certification Statement

All licensed professionals that stamp the plans and make the Department of Buildings' requested code corrections must sign and seal this Certification.

Application Number: D19024-01

Project Address: 154 NORTH DAMEN AVENUE

Chicago, IL 60612

I hereby certify that I am the Professional of Record for this Project and to the best of my knowledge,
I have personally made all requested code corrections to the plans sets as reflected on the attached
correction sheet.

ARCHITECT:
Signature:
Printed Name:
Address:
Dated:
AFFIX SEAL HERE

STRUCTURAL ENGINEER:
Signature:
Printed Name: Christopher M. Hewitt
Address: 135 S. La Salle Street, #3800, Chicago, IL 60603
Dated: 24 APRIL 2020
CHRISTOPHER M. HEWITT 081-006500 LICENSED STRUCTURAL ENGINEER STATE OF ILLINOIS

HVAC CONSULTANT:
(PROFESSIONAL ENGINEER)
Signature:
Printed Name:
Address:
Dated:
AFFIX SEAL HERE

PLUMBING CONSULTANT:
(PROFESSIONAL ENGINEER)
Signature:
Printed Name:
Address:
Dated:
AFFIX SEAL HERE

PERMIT CORRECTION FORM

DESIGN BY:									
DRAWN BY:									
CHECKED BY:									
APPROVED BY:			04/24/20	BUILDING PERMIT CORRECTIONS 3	BS	JH	MW		
CDOT/APPROVED BY:		NO.	DATE	REVISIONS	DES.	DRW.	CHK.	DCCO	CDOT

LICENSED ARCHITECT MARK RICHARD WALSH 001-016935 STATE OF ILLINOIS
PERKINS+WILL INC #184000338-0001
EXP. 11-30-2020

PERKINS+WILL
The Wrigley Building
410 North Michigan Ave.
Suite 1600
Chicago, IL 60611
t 312.755.0770
f 312.755.0775
www.perkinswill.com

CDOT
CHICAGO DEPARTMENT OF TRANSPORTATION
DIVISION OF ENGINEERING

154 N DAMEN AVE - DAMEN GREEN LINE STATION

CERTIFIED PLAN CORRECTIONS

CDOT PROJECT D-7-135

DATE: 04/24/20

SPEC. NO.

DRAWING NO. **G40-28**

REVISION NO.

GENERAL NOTES

1. ANY REFERENCE TO 'STANDARD SPECIFICATIONS' THROUGHOUT THE PLANS OR SPECIAL PROVISIONS MUST BE INTERPRETED TO BE THE ILLINOIS DEPARTMENT OF TRANSPORTATION (IDOT) 'STANDARD SPECIFICATIONS FOR ROAD AND BRIDGE CONSTRUCTION' (SSRBC), ADOPTED APRIL 1, 2016 AND THE IDOT SUPPLEMENTAL SPECIFICATIONS ADOPTED JANUARY 1, 2017.

2. ELEVATIONS SHOWN ON THE PLANS ARE BASED ON CHICAGO CITY DATUM, 1935 ADJUSTMENT, U.S. LAKE SURVEY. CCD = 579.88' ABOVE MEAN TIDE NEW YORK.

3. ALL DIMENSIONS ARE TO FACE OF CURB UNLESS OTHERWISE SPECIFIED.

4. ALL WORK MUST BE DONE IN ACCORDANCE WITH THE 'CHICAGO DEPARTMENT OF TRANSPORTATION, RULES AND REGULATIONS FOR CONSTRUCTION IN THE PUBLIC WAY', LATEST EDITION AND THE CDOT WEBSITE HTTP://WWW.CITYOFCHICAGO.ORG/CITY/EN/DEPTS/CDOT/SUPP_INFO/REGULATIONS_FOR_CONSTRUCTIONINTHEPUBLICWAY.HTML FOR THE CITY OF CHICAGO'S CURRENT ADA STANDARDS.

5. THE CONTRACTOR MUST NOTIFY THE POST OFFICE OF ANY MAIL BOX TO BE REMOVED OR RELOCATED. THE COST OF ANY COORDINATION WITH THE POST OFFICE WILL BE CONSIDERED INCIDENTAL TO 'SIDEWALK REMOVAL'.

6. THE CONTRACTOR MUST CHECK THE ELEVATION AT THE PROPERTY LINE BEFORE SETTING THE TOP OF CURB ELEVATIONS AND, IF NECESSARY, MUST NOTIFY THE COMMISSIONER OF POTENTIAL CONFLICTS WITH THE CURB EXPOSURE AND/OR GUTTER ELEVATION WITH RESPECT TO ADJACENT PROPERTY LINE ELEVATIONS.

7. THE CONTRACTOR WILL BE RESPONSIBLE FOR IMMEDIATELY NOTIFYING THE DIVISION OF INFRASTRUCTURE MANAGEMENT AND OPERATIONS OF ANY DAMAGE TO CITY OWNED AND MAINTAINED TRAFFIC SIGNS, SIGNS, GUARDRAILS, FENCES, ETC.

8. THE CONTRACTOR MUST TAKE ALL NECESSARY SAFETY PRECAUTIONS TO PROTECT ABUTTING PROPERTY, UTILITIES, PEDESTRIANS, AND VEHICULAR TRAFFIC AS NOTED IN THE SPECIAL CONDITIONS.

9. IT IS CALLED TO THE CONTRACTOR'S ATTENTION THAT HE MAY BE REQUIRED TO PAY INSPECTION FEES TO THE VARIOUS DEPARTMENTS OF THE CITY OF CHICAGO AS NOTED IN THE SPECIAL CONDITIONS. THIS COST IS INCLUDED IN THE COST OF THE CONTRACT.

10. ONE-HALF INCH THICK EXPANSION JOINTS MUST BE PLACED BETWEEN THE SIDEWALK AND ALL STRUCTURES SUCH AS LIGHT STANDARDS, TRAFFIC LIGHT STANDARDS, AND ALL MANHOLES THAT EXTEND THROUGH THE SIDEWALK. THE EXPANSION JOINTS WILL BE INCLUDED IN THE COST OF SIDEWALK.

11. TRAFFIC MUST BE MAINTAINED ON ALL STREETS AND PARKING WILL BE PROHIBITED WITHIN 50' OF THE CONSTRUCTION AREA AT ALL TIMES. THE CONTRACTOR MUST NOTIFY THE BUREAU OF TRAFFIC ENGINEERING AND OPERATIONS 48 HOURS BEFORE COMMENCING CONSTRUCTION.

12. WHEN THE PAVEMENT CONSTRUCTED IS PORTLAND CEMENT CONCRETE BASE COURSE OR PORTLAND CEMENT CONCRETE PAVEMENT, THE PAVEMENT JOINTING SYSTEM MUST BE CONSTRUCTED IN ACCORDANCE WITH THE 'STANDARD SPECIFICATIONS'. THE CONTRACT SPECIFICATIONS, AND THE STANDARD DETAILS.

13. IN ACCORDANCE WITH ARTICLE XI OF THE GENERAL CONDITIONS, THE CONTRACTOR MUST SUBMIT A TIME SCHEDULE FOR THE CONSTRUCTION OF THIS PROJECT. THE SCHEDULE MUST INCLUDE THE PERIOD OF TIMES IN WHICH THE WORK ITEMS ARE TO BE COMPLETED. PARTICULAR ATTENTION SHOULD BE GIVEN TO REMOVAL AND REPLACEMENT OF SIDEWALKS, ALLEYS AND DRIVEWAYS. ANY OF THE ITEMS REMOVED MUST BE REPLACED IN THE SHORTEST PERIOD OF TIME AND AT NO TIME MAY THEIR REPLACEMENT EXCEED 10 WORKING DAYS OR THE NUMBER OF WORKING DAYS GIVEN IN THE APPROVED PROJECT SCHEDULE. THE COST OF COMPLIANCE WITH THIS REQUIREMENT WILL BE INCIDENTAL TO EACH RESPECTIVE PAY ITEM OF WORK.

14. THE CONTRACTOR MUST USE CARE IN GRADING NEAR TREES WHICH ARE NOT MARKED FOR REMOVAL SO AS NOT TO CAUSE INJURY TO THE ROOTS, TRUNKS, OR BRANCHES.

15. THE CONTRACTOR MUST BREAK THE SIDEWALK AROUND LIGHT POLES AND BUFFALO BOXES PRIOR TO THE REMOVAL OF THE SIDEWALK.

16. ALL REMOVED TRAFFIC SIGNALS, POSTS, LIGHT POLES, AND LUMINAIRES MUST BE DELIVERED TO THE DIVISION OF ELECTRICAL OPERATIONS AS DIRECTED BY THE COMMISSIONER AT NO ADDITIONAL COST.

17. ACCESS TO EXISTING CROSS ROADS AND DRIVES MUST BE MAINTAINED AT ALL TIMES DURING CONSTRUCTION.

18. THE EXISTING PAVEMENT MUST BE SAWCUT IN ORDER TO PROVIDE FOR A STRAIGHT EDGE BUTT JOINT WHERE COMBINATION CONCRETE CURB AND GUTTER IS TO BE REPLACED, WHERE FULL DEPTH PATCHES ARE TO BE CONSTRUCTED, WHERE TRENCHES FOR PROPOSED DRAINAGE STRUCTURES ARE TO BE EXCAVATED, AND WHERE PAVEMENT IS TO BE RECONSTRUCTED AS SHOWN ON THE PLANS, AND AS DIRECTED BY THE COMMISSIONER. FOR COMBINATION CONCRETE CURB AND GUTTER, THE SAWCUT MUST BE DEEP ENOUGH TO PENETRATE THE EXISTING BASE COURSE WHERE NECESSARY TO ASSURE A STRAIGHT EDGE FOR THE FULL DEPTH OF COMBINATION CONCRETE CURB AND GUTTER. FOR PATCHES AND DRAINAGE STRUCTURES, THE SAWCUT MUST BE FULL DEPTH. ALL OTHER SAWCUTTING MUST BE TO THE DEPTHS SHOWN ON THE PLANS OR GIVEN IN THE SPECIFICATIONS. ALL SAWCUTTING SHOWN ON THE PLANS OR OTHERWISE REQUIRED FOR THIS WORK WILL BE CONSIDERED INCLUDED IN THE COST OF THE ADJACENT REMOVAL ITEM(S). ANY SAWCUTTING REQUIRED THROUGH STREETCAR RAILS OR TIES WILL ALSO BE CONSIDERED INCLUDED IN THE ITEM BEING REMOVED.

19. THE CONTRACTOR WILL BE RESPONSIBLE FOR CONTACTING THE CHICAGO UTILITY ALERT NETWORK AT (312) 744-7000 SO THAT UTILITIES AND THEIR APPURTENANCES MAY BE LOCATED AND ADJUSTED OR MOVED, IF NECESSARY, PRIOR TO THE START OF CONSTRUCTION OPERATIONS. THE CONTRACTOR MUST COOPERATE WITH ALL UTILITY OWNERS AS PROVIDED FOR IN THE 'STANDARD SPECIFICATIONS'.

20. THE CITY DOES NOT GUARANTEE THE COMPLETENESS OR ACCURACY OF THE INFORMATION SHOWN ON THE PLANS REGARDING UTILITIES, EITHER PUBLIC OR PRIVATE, SUCH AS SEWERS, MANHOLES, PRIVATE DRAINS, CATCH BASINS, GAS AND WATER MAINS, TELEPHONE, FIBER OPTIC, AND ELECTRICAL DUCT LINES AND SIMILAR STRUCTURES. THE CONTRACTOR MUST VERIFY THE EXACT LOCATION OF ALL UTILITIES THAT MAY INTERFERE WITH CONSTRUCTION OPERATIONS AND MUST REPORT TO THE COMMISSIONER ANY OMISSIONS AND DIFFERENCES FROM THE LOCATIONS SHOWN ON THE PLANS. THE COST OF THIS WORK WILL BE CONSIDERED INCLUDED IN THE COST OF THE CONTRACT.

21. THE CONTRACTOR MUST PROTECT EXISTING AND NEW UTILITIES WHEN CONSIDERED NECESSARY BY THE COMMISSIONER, BY METHODS ACCEPTABLE TO THE COMMISSIONER AND HE/SHE MUST BRACE AND SUPPORT THE UTILITIES PROPERLY TO PREVENT SETTLEMENT, DISPLACEMENT, OR CHANGE TO THE UTILITIES. THE PROTECTION OF THE UTILITIES AS SPECIFIED HEREIN WILL NOT BE PAID FOR SEPARATELY, BUT THE COST THEREOF WILL BE CONSIDERED AS INCLUDED IN THE COST OF THE CONTRACT.

22. ANY UTILITY THAT IS DAMAGED DURING CONSTRUCTION MUST BE REPAIRED OR REPLACED BY THE CONTRACTOR AT HIS/HER OWN EXPENSE.

23. MOVING UTILITIES WILL BE THE RESPONSIBILITY OF THE UTILITY OWNERS EXCEPT AS NOTED ON THE PLANS, IN THE GENERAL NOTES, AND IN THE SPECIFICATIONS. THE CONTRACTOR WILL BE RESPONSIBLE FOR COORDINATING ANY UTILITY RELOCATION(S). NO ADDITIONAL PAYMENT WILL BE MADE FOR THIS COORDINATION WORK.

24. ANY PAVEMENT REMOVAL AND REPLACEMENT OPERATION TO BE DIRECTLY ABOVE A COMED COMPANY LINE MUST BE CLOSELY COORDINATED WITH COMED. REPRESENTATIVES FROM THE CITY OF CHICAGO DEPARTMENT OF TRANSPORTATION AND COMED MUST BE PRESENT DURING THE PERFORMANCE OF THIS WORK. THE CONTRACTOR MUST ARRANGE FOR THE REPRESENTATIVES' ATTENDANCE.

25. A PERMIT IS REQUIRED FROM THE DEPARTMENT OF WATER MANAGEMENT PRIOR TO THE CONSTRUCTION OF, OR REPAIRS TO, UNDERGROUND SEWERS, DRAIN CONNECTIONS, OR SEWER STRUCTURES, INCLUDING THE ADJUSTMENT OF SEWER STRUCTURES AND THE REMOVAL/REPLACEMENT OF FRAMES AND LIDS. THE PERMIT MUST BE OBTAINED BY A DRAIN LAYER CURRENTLY LICENSED BY THE DEPARTMENT OF WATER MANAGEMENT.

26. THE DEPARTMENT OF WATER MANAGEMENT MUST BE NOTIFIED AT LEAST 48 HOURS IN ADVANCE OF CONSTRUCTION, WITH THE NAME AND TELEPHONE NUMBER OF A CONTACT PERSON WHO CAN BE CONTACTED FOR ANY SEWER EMERGENCY.

27. IN ORDER TO PROTECT THE CITY'S BENCH MONUMENTS, ALL BENCH MONUMENT LOCATIONS WITHIN THE LIMITS OF THE PROJECT ARE LISTED ON THE PLAN SHEETS. IF ANY BENCH MONUMENTS ARE NOT LOCATED OR IF DAMAGE TO ANY BENCH MONUMENTS IS ENCOUNTERED, PLEASE CONTACT THE DEPARTMENT OF WATER MANAGEMENT IMMEDIATELY AT (312) 747-7893 OR (312) 747-8117.

28. IN THE RELOCATION OF PRIVATE OR PUBLIC UTILITIES, INCLUDING PIPE UNDERDRAINS AND/OR SUBDRAINS, THE UTILITY SHOULD BE LOCATED AS FAR AWAY AS POSSIBLE FROM THE DEPARTMENT OF WATER MANAGEMENT FACILITY. A MINIMUM DISTANCE OF THE OUTSIDE DIAMETER OF THE SEWER (OD) PLUS 4' MUST BE MAINTAINED BETWEEN THE SEWER AND THE UTILITY CENTER LINES. IF THE OUTSIDE DIAMETER/WIDTH OF UTILITY CONDUIT IS MORE THAN THE SEWER OD, A MINIMUM OF 4' HORIZONTAL CLEARANCE MUST BE OBTAINED FROM THE OUTSIDE FACE TO OUTSIDE FACE. 4' HORIZONTAL CLEARANCE IS ALSO REQUIRED FROM ALL SEWER STRUCTURES. A MINIMUM OF 10' HORIZONTAL CLEARANCE AND 1.5' VERTICAL CLEARANCE IS DESIRED BETWEEN THE SEWER AND A WATER MAIN.

29. MANHOLES, CATCH BASINS, AND INLETS MUST BE PROTECTED FROM THE ENTRY OF ASPHALT/DEBRIS INTO THE SEWER SYSTEM DURING CONSTRUCTION. ADJUSTMENT OF FRAMES AND LIDS OF SEWER STRUCTURES MUST BE COMPLETED PRIOR TO STREET RESURFACING.

30. THE CONTRACTOR MUST MAINTAIN ACCESS TO THE EXISTING SEWER FACILITIES, INCLUDING SEWER STRUCTURES, AT ALL TIMES AND COORDINATE THE PROPOSED IMPROVEMENTS WITH THE DEPARTMENT OF WATER MANAGEMENT ENGINEER/INSPECTOR TO AVOID ANY INTERRUPTION OF THE SEWER FACILITIES' MAINTENANCE OR SERVICES. THE SEWER FLOW MUST BE MAINTAINED AT ALL TIMES.

31. THE CONTRACTOR IS RESPONSIBLE FOR THE ADEQUATE PROTECTION OF THE EXISTING SEWERS, DRAIN CONNECTIONS, AND SEWER STRUCTURES FROM DAMAGE CAUSED BY HEAVY EQUIPMENT.

32. THE CONTRACTOR MUST LOCATE AND PROPERLY CONNECT TO THE NEW SEWERS, ALL LIVE HOUSE DRAINS, CATCH BASIN DRAINS, AND OTHER EXISTING LATERALS, DRAINS, AND SEWERS OF WHATEVER NATURE WHICH ARE CONNECTED TO THE EXISTING SEWERS BEING REPAIRED OR REPLACED. THIS WORK WILL BE INCLUDED IN THE COST OF THE CONTRACT.

33. PRIOR TO STARTING CONSTRUCTION, AN INSPECTION OF EXISTING MANHOLES AND CATCH BASINS WILL BE MADE BY THE CITY IN COORDINATION WITH THE DEPARTMENT OF WATER MANAGEMENT INSPECTOR AND THE CONTRACTOR TO DETERMINE THE AMOUNT OF EXISTING DEBRIS IN THESE STRUCTURES. UPON COMPLETION OF THE CONTRACT, THE CONTRACTOR MUST CLEAN ONLY THOSE STRUCTURES WHERE DEBRIS HAS BEEN ADDED DUE TO CONSTRUCTION. THIS WORK WILL NOT BE PAID SEPARATELY, BUT WILL BE CONSIDERED INCLUDED IN THE COST OF THE CONTRACT.

34. EXISTING CATCH BASIN LATERALS TO BE REUSED MUST BE RODDED AND FLUSHED IN THE PRESENCE OF THE DEPARTMENT OF WATER MANAGEMENT INSPECTOR. A NEW CONNECTION TO THE MAIN SEWER IS REQUIRED IF THE EXISTING CATCH BASIN LATERAL IS NOT APPROVED BY THE SEWER INSPECTOR. THIS WORK, INCLUDING RODDING OR FLUSHING, WILL BE CONSIDERED INCLUDED IN THE COST OF THE CONTRACT.

35. THE FRAMES AND LIDS OF SEWER STRUCTURES TO BE ABANDONED, REMOVED, OR FILLED MUST BE SALVAGED AND THE DEPARTMENT OF WATER MANAGEMENT NOTIFIED FOR DELIVERY. ANY FRAMES AND LIDS NOT WANTED BY THE DEPARTMENT OF WATER MANAGEMENT MUST BE DISPOSED OF BY THE CONTRACTOR AT NO ADDITIONAL COST.

36. DURING CONSTRUCTION OF THIS PROJECT, THE CONTRACTOR MUST MAINTAIN THE SURFACE DRAINAGE OF THE ROAD AT ALL TIMES.

37. THE DEPARTMENT OF WATER MANAGEMENT WILL INSTALL TAPS FOR ALL WATER SERVICES TO BE RELOCATED AS REQUIRED BY THIS IMPROVEMENT.

38. THE CITY OF CHICAGO OFFICE OF EMERGENCY MANAGEMENT AND COMMUNICATION (OEMC) WILL PERFORM ANY NECESSARY WORK ASSOCIATED WITH THE INSTALLATION AND REMOVAL OF ALL ALARM SYSTEM CABLE. THE CONTRACTOR WILL BE RESPONSIBLE FOR NOTIFYING THE OEMC (MR. JEFF CAIRNS 312-746-9840) PRIOR TO THE COMMENCEMENT OF ALL WORK, MUST COORDINATE ALL WORK ACTIVITIES SO AS NOT TO INTERFERE WITH THE WORK TO BE PERFORMED BY THE OEMC, AND MUST SUPPLY ALL NECESSARY CONDUITS REQUIRED FOR THE FIRE ALARM/POLICE COMMUNICATIONS CABLE CONNECTIONS TO REMAIN IN SERVICE AT ALL TIMES. REQUIRED COORDINATION OF WORK WITH THE OEMC WILL BE CONSIDERED INCLUDED IN THE COST OF THE CONTRACT AND NO ADDITIONAL COMPENSATION OR EXTENSIONS OF TIME WILL BE GRANTED ARISING FROM OR ATTRIBUTED TO SAID COORDINATION.

39. BEFORE CONSTRUCTION COMMENCES, A PROFESSIONAL SURVEYOR MUST CHECK AND RECORD THE ELEVATION AND LOCATION OF EACH CTA COLUMN. THE SURVEYOR MUST CHECK THESE COLUMNS THROUGHOUT CONSTRUCTION FOR SETTLEMENT AND DEFLECTION CAUSED BY CONSTRUCTION OPERATIONS, AS DIRECTED BY THE COMMISSIONER. AT A MINIMUM, COLUMNS WITHIN 25' OF TRENCHING OR EXCAVATION OPERATIONS MUST BE CHECKED FOR MOVEMENT DAILY WHILE TRENCHES OR AREAS OF EXCAVATION ARE OPEN, WEEKLY THROUGHOUT CONSTRUCTION, AND AT THE CONCLUSION OF CONSTRUCTION UNTIL IT IS DETERMINED THAT NO MOVEMENT IS OCCURRING. FURTHERMORE, THE COMMISSIONER MAY DIRECT THE SURVEYOR TO CHECK ADDITIONAL COLUMNS IN AREAS OF CONCERN WITHIN THE PROJECT LIMITS AT ANY TIME. ANY SETTLEMENT OR DEFLECTION MUST BE IMMEDIATELY BROUGHT TO THE ATTENTION OF THE COMMISIONER AND THE CTA, AND ALL WORK IN THE AREA MUST CEASE UNTIL A PLAN IS APPROVED BY THE COMMISSIONER ADDRESSING THE ISSUE. THIS WORK WILL NOT BE PAID SEPARATELY, BUT WILL BE CONSIDERED INCLUDED IN THE COST OF THE CONTRACT.

40. THE CONTRACTOR MUST HIRE A PROFESSIONAL SURVEYOR TO PERFORM ALL LAYOUT FOR THE PROJECT. THIS WORK WILL NOT BE PAID SEPARATELY, BUT WILL BE CONSIDERED INCLUDED IN THE COST OF THE CONTRACT.

41. THE CONTRACTOR IS REQUIRED, BY MEANS OF A MECHANICAL SWEEPER, TO SWEEP ALL STREETS LEADING TO THE ACCESS LOCATIONS WHERE APPLICABLE. THE COMMISSIONER WILL BE THE SOLE JUDGE IN DETERMINING THE FREQUENCY AND LIMITS OF SWEEPING. SWEEPING WILL NOT BE PAID FOR SEPARATELY BUT CONSIDERED INCLUDED IN THE COST OF THE CONTRACT.

42. THE CONTRACTOR'S VEHICLES MUST ALWAYS MOVE WITH AND NOT AGAINST OR ACROSS THE FLOW OF TRAFFIC. THESE VEHICLES MUST ENTER OR LEAVE WORK AREAS IN A MANNER WHICH WILL NOT BE HAZARDOUS TO OR INTERFERE WITH NORMAL TRAFFIC AND MUST NOT PARK OR STOP EXCEPT WITHIN DESIGNATED WORK AREAS. PERSONAL VEHICLES WILL NOT BE PERMITTED TO PARK WITHIN THE RIGHT-OF-WAY EXCEPT IN SPECIFIC AREAS DESIGNATED BY THE COMMISSIONER.

43. THE CONTRACTOR MUST PROVIDE A RECORD OF ALL MATERIALS DISPOSED AT LOCATIONS OUTSIDE OF PROJECT LIMITS. THE CONTRACTOR MUST PROVIDE A RECORD OF DISPOSAL LOCATION.

44. AFTER COMPLETION OF THE PROJECT, THE CONTRACTOR SHALL SUBMIT AS-BUILT PLANS FOR ALL WORK TO THE COMMISSIONER OF THE DEPARTMENT OF TRANSPORTATION. AS BUILT-PLANS MAY CONSIST OF MARK-UPS OF NOTES AND UPDATES TO THE ORIGINAL BID PLANS VIA ADOBE ACROBAT PROFESSIONAL, V. 7.0 OR HIGHER. TWO (2) HARD COPIES OF THE PLANS SEALED BY A PROFESSIONAL ENGINEER OR LAND SURVEYOR AND A DISK OF THE PLANS IN *.TIF AND MUST BE SUBMITTED TO CDOT, ACCOMPANIED BY TRANSMITTAL FORM TO BE PROVIDED BY THE ENGINEER. AS-BUILT PLAN SHEETS SAVED TO DISK SHOULD BE SAVED IN THE FILE FOLDER WITH FILE NAME, 154 N DAMEN AVE. LINE PROJECT. IF SIGNIFICANT CHANGES ARE MADE, CAD FILE MARKUPS SHOULD ALSO BE PROVIDED IN THE FORMAT PROVIDED BY THE ENGINEER (STANDARD *.DGN). INCIDENTAL TO MOBILIZATION.

45. ALL TEMPORARY REGULATORY, WARNING AND GUIDE SIGNS WITHIN THE PROPOSED IMPROVEMENT MUST BE RELOCATED BY THE CONTRACTOR AS DIRECTED BY THE COMMISSIONER. THIS WORK WILL BE INCIDENTAL TO TRAFFIC CONTROL AND PROTECTION.

46. ALL TRAFFIC SIGNS WITHIN THE LIMITS OF CONSTRUCTION WHICH INTERFERE WITH CONSTRUCTION OPERATIONS OR WHICH ARE OBSCURED BY OR OTHERWISE INTERFERED WITH BY THE CONSTRUCTION OPERATIONS TO THE EXTENT THAT THEY NO LONGER HAVE THE DESIRED EFFECT ON TRAFFIC, MUST BE REMOVED BY THE CONTRACTOR WHEN DIRECTED BY THE COMMISSIONER. ANY SUCH SIGNS THE COMMISSIONER DETERMINES ARE ESSENTIAL TO THE SAFE AND ORDERLY FLOW OF TRAFFIC MUST BE RE-ERECTED IMMEDIATELY BY THE CONTRACTOR AT TEMPORARY LOCATIONS IN A MANNER ACCEPTABLE TO THE COMMISSIONER. THE CONTRACTOR MUST MAINTAIN THE SIGNS IN A STRAIGHT AND NEAT CONDITION FOR THE DURATION OF THE TEMPORARY MOUNTING. SIGNS WHICH ARE NOT TO BE ERECTED IMMEDIATELY MUST BE STORED OFF THE GROUND IN A COVERED AREA. AS SOON AS CONSTRUCTION OPERATIONS PERMIT, THE SIGNS MUST BE REPLACED AT THEIR PERMANENT LOCATIONS TO THE SATISFACTION OF THE COMMISSIONER. ANY SIGN OR POST WHICH THE COMMISSIONER DETERMINES HAS BEEN DAMAGED DUE TO THE CONSTRUCTION OPERATION OR WHILE IN STORAGE MUST BE REPLACED BY THE CONTRACTOR. THE COSTS OF ALL MATERIALS REQUIRED AND ALL LABOR NECESSARY TO COMPLY WITH THIS WORK WILL BE CONSIDERED INCLUDED IN THE COST OF THE CONTRACT.

47. SHORING MAY BE REQUIRED FOR WORK, AS REQUIRED BY THE SPECIFICATIONS, REGULATIONS, AND STANDARDS. THIS SHORING WILL BE INCLUDED IN THE COST OF THE CONTRACT.

48. REMOVAL, DISPOSAL, AND CAPPING OF ALL ENCOUNTERED ABANDONED UTILITIES LINES WILL BE CONSIDERED INCLUDED IN THE COST OF THE ITEM BEING REMOVED OR INSTALLED. NO SEPARATE PAYMENT WILL BE MADE.

49. RECORDS OBTAINABLE FROM THE DEPARTMENT OF WATER MANAGEMENT - BUREAU OF ENGINEERING SERVICES, SEWER SECTION INCLUDE: EXISTING SEWER, PRIVATE DRAINAGE CONNECTIONS, SEWER STRUCTURES, BENCH MONUMENT LOCATIONS, ORDINANCE GRADES, AND PIPE MATERIAL. COPIES OF THESE RECORDS CAN BE OBTAINED ON PAYMENT TO THE DEPARTMENT OF WATER MANAGEMENT, LOCATED AT THE JARDINE WATER PURIFICATION PLANT, 1000 EAST OHIO STREET. IT IS THE RESPONSIBILITY OF THE CONTRACTOR TO OBTAIN COPIES OF THESE RECORDS.

50. ALL REFERENCES TO THE ENGINEER IN THE STANDARD SPECIFICATIONS SHALL REFER TO THE COMMISSIONER.

51. THE USE OF WET BOTTOM BOILER SLAG AS SPECIFIED IN SECTIONS 1003 AND 1004 OF THE STANDARD SPECIFICATIONS WILL NOT BE ALLOWED.

52. EXCEPT DURING WINTER SHUTDOWN PERIODS, TEMPORARY PAVEMENT MARKINGS SHOWING DETERIORATION FOR ANY REASON WITHIN 30 CALENDAR DAYS AFTER PLACEMENT MUST BE REPLACED BY THE CONTRACTOR AT HIS/HER OWN EXPENSE.

53. FOR RELOCATE SIGN PANEL - TYPE 1, THE CONTRACTOR IS RESPONSIBLE FOR STORING THE EXISTING SIGN PANEL UNTIL IT CAN BE RE-INSTALLED. THE CONTRACTOR ASSUMES THE RESPONSIBILITY FOR THE CONDITION OF THE SIGN ONCE IT IS REMOVED FROM ITS SUPPORT. THE CONTRACTOR MUST COORDINATE THE REMOVAL AND RE-INSTALLATION TO MINIMIZE THE TIME WITHOUT SIGNING. ALL SIGNS TO BE REMOVED MUST BE INVENTORIED WITH THE COMMISSIONER PRIOR TO REMOVAL.

54. JOINTS IN THE PCC BASE COURSE MUST BE PROLONGATIONS OF JOINTS IN THE ADJACENT PCC CURB, CURB AND GUTTER AND BASE COURSE OR IN ACCORDANCE WITH THE DRAWINGS AND THE STANDARD DETAILS. BOX OUTS IN THE PCC BASE COURSE, IF REQUIRED, MUST BE CONSTRUCTED PER THE STANDARD BOX OUT DETAILS. NO ADDITIONAL COMPENSATION WILL BE MADE FOR BASE COURSE BOX OUTS OR ADDITIONAL JOINTS.

55. BEGINNING ON THE DATE WHEN THE CONTRACTOR BEGINS WORK ON THIS PROJECT THEY MUST ASSUME RESPONSIBILITY FOR THE NORMAL MAINTENANCE OF ALL EXISTING ROADWAYS WITHIN THE LIMITS OF THE IMPROVEMENT. THIS NORMAL MAINTENANCE WILL INCLUDE ALL REPAIR WORK DEEMED NECESSARY BY THE COMMISSIONER BUT WILL NOT INCLUDE SNOW REMOVAL OPERATIONS. FAILURE TO MAINTAIN THE EXISTING ROADWAYS AS INSTRUCTED BY THE COMMISSIONER WILL BE CONSIDERED A TRAFFIC CONTROL DEFICIENCY AND THE CONTRACTOR WILL BE CHARGED FOR TRAFFIC CONTROL DEFICIENCY IN ACCORDANCE WITH THE SPECIFICATIONS.

56. BEFORE PLACING LEVELING BINDER (HAND METHOD), N70, THE AREA MUST BE CLEANED AND PAINTED WITH ONE COAT OF TACK COAT PER THE SSRBC. THE CLEANING, PRIMING, AND REMOVAL OF THIS MATERIAL WILL NOT BE PAID FOR SEPARATELY BUT WILL BE CONSIDERED INCLUDED IN THE PAY ITEM, LEVELING BINDER (HAND METHOD), N70.

57. WHEN ADJUSTED UTILITY STRUCTURES ARE IN LANES OPENED TO TRAFFIC BEFORE THE HMA SURFACE COURSE HAS BEEN APPLIED, THESE STRUCTURES MUST BE RAMPED IN ACCORDANCE WITH THE TEMPORARY HMA RAMP DETAILS BEFORE THE LANES ARE OPENED TO TRAFFIC. THE RAMPS ARE TO BE PLACED AT STRUCTURES AS DIRECTED BY THE COMMISSIONER REGARDLESS OF WHETHER THE STRUCTURE SHAPE IS ROUND, SQUARE, OR RECTANGULAR.

58. THE CONTRACTOR MUST PROVIDE ADDITIONAL TRAFFIC CONTROL DEVICES AND FLAGMEN WHEN PLACING BINDER COURSES ON ROADWAYS OPEN TO TRAFFIC. THE USE OF TWO CERTIFIED FLAGGERS IS MANDATORY AT ALL TIMES. ADDITIONAL TRAFFIC CONTROL DEVICES AND FLAGGERS WILL NOT BE PAID FOR SEPARATELY BUT CONSIDERED INCLUDED IN TRAFFIC CONTROL AND PROTECTION. FAILURE TO PROVIDE ADEQUATE TRAFFIC CONTROL OR TWO FLAGGERS WILL BE CONSIDERED A TRAFFIC CONTROL DEFICIENCY AND THE CONTRACTOR WILL BE CHARGED FOR TRAFFIC CONTROL DEFICIENCY IN ACCORDANCE WITH THE SPECIFICATIONS.

59. MANHOLE OR CATCH BASIN FRAMES AND LIDS DESIGNATED FOR REUSE BY THE COMMISSIONER MUST BE MOVED BY THE CONTRACTOR TO THE LOCATIONS OF THE MANHOLES OR CATCH BASINS ON WHICH THEY ARE TO BE PLACED. THE COST OF MOVING AND HANDLING OF THE OLD CASTINGS, AND THE SETTING OF ANY REUSABLE FRAMES AND LIDS WILL BE INCLUDED IN THE COST OF THE CONTRACT.

60. FOR ALL SEWER STRUCTURE INSTALLATIONS, FA6 WILL BE USED FOR BACKFILL MATERIAL AND CA11 FOR BEDDING MATERIAL.

61. ALL FERTILIZER, NUTRIENTS, AGRICULTURAL GROUND LIMESTONE, PINS, STAKES, WATERING AND REWORKING OF CRUSTED TOPSOIL, AS REQUIRED, WILL FOLLOW ARTICLE 252 OF THE STANDARD SPECIFICATIONS AND BE INCLUDED IN THE COST OF THE CONTRACT.

ABBREVIATIONS

PCC	PORTLAND CONCRETE CEMENT	℄	CENTERLINE
PGL	PROFILE GRADE LINE	CB	CATCH BASIN
PR	PROPOSED	COM ED	COMMONWEALTH EDISON
R	RADIUS	CS	COMBINED SEWER
ROW	RIGHT OF WAY	EX	EXISTING
RT	RIGHT	LT	LEFT
TY	TYPE	T/C	TOP OF CURB
TYP	TYPICAL	F/L	FLOW LINE
H.P.	HIGH POINT	V.I.F.	VERIFY IN FIELD
L.P.	LOW POINT	F	FACE OF CURB

DESIGN BY:	YA		01/27/2020	ISSUE FOR BID	YA	YMD	EJL		
DRAWN BY:	ML		10/04/2019	ISSUE FOR OUC EFP	CJB	YMD	EJL		
CHECKED BY:	EJL		06/14/2019	ISSUE FOR 100% DESIGN	LAB	YMD	EJL		
APPROVED BY:	EJL		06/14/2019	ISSUE FOR PERMIT	LAB	YMD	EJL		
CDOT/APPROVED BY:		NO.	DATE	REVISIONS	DES.	DRW.	CHK.	DCCO	CDOT

MILHOUSE
333 South Wabash Avenue
Suite 2901
Chicago, IL 60604
t 312.994.8701
f 312.987.0071
www.milhouseinc.com

PERKINS+WILL
The Wrigley Building
410 North Michigan Ave.
Suite 1600
Chicago, IL 60611
t 312.755.0770
f 312.755.0775
www.perkinswill.com

CDOT
CHICAGO DEPARTMENT OF TRANSPORTATION
DIVISION OF ENGINEERING

154 N DAMEN AVE - DAMEN GREEN LINE STATION

GENERAL NOTES

CDOT PROJECT D-7-135

DATE: 01/27/2020

SPEC. NO.

DRAWING NO. C00-01

REVISION NO.

62. DUE TO UTILITY CONFLICTS, CERTAIN LOCATIONS WHERE CATCH BASINS ARE DETAILED MAY NEED TO BE CHANGED TO 3' DIAMETER CATCH BASINS OR INLETS. UPON EXCAVATION IN THE AREA, A DETERMINIATION WILL BE MADE BY THE COMMISSIONER OR DOWM MASON INSPECTOR AS TO WHICH STRUCTURE SHOULD BE USED (3' CB, 4' CB, OR INL/CB). NO ADDITIONAL COMPENSATION WILL BE MADE FOR ANY DELAYS WHILE WAITING ON THE DETERMINATION.

64. REMOVAL OF EXISTING STRUCTURES WILL INCLUDE, BUT IS NOT LIMITED TO, BUILT-UP STEEL COLUMNS, PORTIONS OF STEEL CROSS GIRDER AND BRACING, AND CONCRETE COLUMN BASES TO 2' MINIMUM BELOW PROPOSED GRADE. IT WILL ALSO INCLUDE REMOVAL OF EXISTING RIVETS OR BOLTS, AS REQUIRED FOR THE REMOVAL AND/OR REPLACEMENT OF THE EXISTING STRUCTURAL STEEL AND THE INSTALLATION OF NEW STRUCTURAL STEEL.

65. THE CONTRACTOR MUST FOLLOW QC/QA PROCEDURES FOR ALL CONCRETE AND HOT-MIX ASPHALT ITEMS ACCORDING TO SECTION 406 OF THE STANDARD SPECIFICATIONS. THE COST OF THIS WORK WILL BE INCLUDED IN THE COST OF THE COST OF THE CONTRACT.

66. CONCRETE RETAINING WALL REMOVAL WILL INCLUDE, BUT IS NOT LIMITED TO, CONCRETE RETAINING WALL, REINFORCEMENT, AND CONCRETE RETAINING WALL FOUNDATION TO 2' MINIMUM BELOW PROPOSED GRADE. IT WILL ALSO INCLUDE REMOVAL OF ANY ADDITIONAL CONCRETE RETAINING WALL FOUNDATION IN ORDER TO AVOID CONFLICTS WITH PROPOSED ELEMENTS.

67. ALL REFERENCES MADE TO HIGH EARLY STRENGTH PORTLAND CEMENT CONCRETE DRIVEWAY, PAVEMENT BASE COURSE, OR CURB AND GUTTER PAY ITEMS SHALL BE DEFINED AS REQUIRING AN APPROVED CLASS PP-1 MIXTURE. ANY PP-1 MIXTURE PLACED TO MEET A HIGH EARLY STRENGTH REQUIREMENT SHALL FOLLOW ALL OF THE REQUIREMENTS ASSOCIATED WITH THE PAY ITEMS STANDARD PV OR SI MIXTURE CLASS, EXCEPT THE STRENGTH WILL BE REQUIRED TO OBTAIN 3,500 PSI AT 3 DAYS.

68. SHOULD THE CONTRACTOR BE UNABLE TO PLACE THE SURFACE COURSE PRIOR TO WINTER SHUTDOWN, THE CONTRACTOR WILL BE REQUIRED TO SUBMIT FOR APPROVAL AND UPON APPROVAL TO PLACE A WINTER BINDER MIX IN LIEU OF THE REGULAR BINDER MIX. NO ADDITIONAL PAYMENT WILL BE MADE FOR THE REQUIRED USE OF A WINTER BINDER MIX.

69. ALL PAVEMENT, SIDEWALK, CURB AND GUTTER, ALLEY, AND DRIVEWAY ITEMS TO BE REMOVED SHALL BE SAW CUT AND REMOVED TO THE SUBBASE ELEVATION.

70. CTA TRAFFIC PLANNING MUST BE NOTIFIED AT LEAST 30 DAYS IN ADVANCE OF THE TIME THAT CONSTRUCTION WILL COMMENCE.

TRAFFIC.PLANNING@TRANSITCHICAGO.COM
-OR-
JACK CHALABIAN
COORDINATOR, TRAFFIC PLANNING
312-681-4176
JCHALABIAN@TRANSITCHICAGO.COM

71. CONTRACTOR TO LOCATE, HAND DIG, EXPOSE AND PROTECT ALL EXISTING AT&T UNDERGROUND FACILITIES. PLEASE CONTACT RADMILA BUHA AT 630-573-5762 OR RB945P@ATT.COM AT LEAST FORTY-FIVE (45) DAYS PRIOR TO CONSTRUCTION COMMENCEMENT TO COORDINATE ANY AT&T WORK.

72. IEPA REQUIRED SEWER AND WATER MAIN SEPARATION MUST BE MAINTAINED. PROPOSED SEWER LINES MUST MAINTAIN 18" VERTICAL CLEARANCE WITH THE EXISTING WATER LINES. IF LESS THAN 18", DUCTILE IRON PIPE MUST BE USED.

73. CONTRACTOR IS TO DOCUMENT AND PROVIDE TO CDOT A COMPREHENSIVE SET OF ALL UTILITIES EXISTING AND RELOCATED AT THE DAMEN/LAKE INTERSECTION AS WELL AS ONE BLOCK EAST AND WEST ALONG LAKE AND ONE BLOCK NORTH AND SOUTH ALONG DAMEN. THIS SET OF AS-BUILTS MUST BE PROVIDED TO CDOT IN AUTOCAD FORMAT AS WELL AS PDF'S.

74. THE CONTRACTOR MUST INSTALL TEMPORARY FENCE, AT THE DIRECTION OF THE COMMISSIONER, TO PROTECT EXISTING PLANTS AND LANDSCAPING TO REMAIN, IN ACCORDANCE WITH THE DETAILS FOUND ON THE LANDSCAPING DETAILS.

75. CONTRACTOR IS RESPONSIBLE FOR THE CORRECT LAYOUT OF THE PROPOSED CURB IN COORDINATION WITH ANY REQUIRED FIRE HYDRANT RELOCATION, PRIOR TO INSTALLATION OF THE CURB AND GUTTER, AND THIS WORK IS INCIDENTAL TO 'COMBINATION CURB AND GUTTER, TYPE B-V.12'.

76. IN ACCORDANCE WITH SECTION 780 OF THE SSRBC, ALL CURB INSTALLATIONS ADJACENT TO FIRE HYDRANT MUST BE PAINTED 'SAFETY YELLOW' FOR 15 FEET ON EACH SIDE OF THE FIRE HYDRANT EXCEPT WHERE THE 15 FOOT DIMENSION INTERSECTS A CROSSWALK, DRIVEWAY OR SIMILAR FEATURE, AND THIS WORK IS INCIDENTAL TO 'COMBINATION CURB AND GUTTER, TYPE B-V.12'. PAINT DOES NOT REQUIRE GLASS BEADS AND SHOULD BE PAINTED TO HAVE NEAT STRAIGHT EDGES ALONG BACK OF CURB AND VERTICALLY UP THE CURB FACE.

77. CONTRACTOR SHALL WALK PROJECT LENGTH WITH RESIDENT ENGINEER, PRIOR TO ANY REMOVAL OF SIGNS AND TREES AND REVIEW PROPOSED SIGNS TO REMAIN AND BE RELOCATED OR REMOVED AND SALVAGED. RESIDENT ENGINEER MAY ISSUE DIRECTION TO REPLACE ANY AND ALL EXISTING SIGNS, AND QUANTITIES HAVE BEEN INCLUDED TO DO SO UNDER THE APPLICABLE 'SIGN PANEL' ITEMS.

78. USE EXTREME CAUTION NEAR ALL GAS FACILITIES DURING CONSTRUCTION AND RELATED EXCAVATION ACTIVITIES. HAND EXCAVATION IS REQUIRED TO FIELD VERIFY THE HORIZONTAL AND VERTICAL LOCATION OF GAS MAIN(S) PRIOR TO CROSSING AND WORKING WITHIN 3 FEET OF ALL GAS FACILITIES. A 3' HORIZONTAL EDGE TO EDGE CLEARANCE IS REQUIRED FOR GAS MAINS WITH 18" DIAMETER AND LARGER. MAINTAIN A MINIMUM OF 18" EDGE TO EDGE VERTICAL CLEARANCE ON GAS MAINS LESS THAN 20" IN DIAMETER, AND 24" EDGE TO EDGE VERTICAL CLEARANCE ON 20" AND LARGER DIAMETER GAS MAINS. CONTACT DIGGER 312-744-7000 FOR LOCATES 48 HOURS PRIOR TO START OF CONSTRUCTION.

79. THE USE OF CONCRETE, FLOW FILL, OR THE LIKE IS PROHIBITED WITHIN 24 INCHES OF ALL GAS FACILITIES, NOR SHALL IT ENCASE ANY GAS FACILITY. A BUFFER OF 24" SAND IS TO BE USED BETWEEN FLOW FILL AND ALL GAS FACILITIES. A MINIMUM OF 6" FA-02 OR FM-02 SAND SHALL BE USED WHEN BACKFILLING OTHER MATERIALS AROUND ANY EXPOSED GAS FACILITY. CONTRACTOR EXPOSING GAS FACILITY IS RESPONSIBLE FOR PROVIDING THE SAND. ANY DAMAGES TO PEOPLES GAS FACILITIES SHALL BE THE RESPONSIBILITY OF THE INSTALLING UTILITY AND THEIR CONTRACTOR(S). NOTIFY MARK TERRULLI, 773-542-7810 IMMEDIATELY FOR ANY DAMAGES TO THE GAS FACILITIES. ALL GAS FACILITIES ARE TO BE MAINTAINED.

80. THE CONTRACTOR SHALL USE EXTREME CAUTION WHEN WORKING BELOW THE ELEVATED TRACK STRUCTURE, NEAR THE STEEL COLUMNS SUPPORTING THE TRACK AND THEIR FOUNDATIONS. MAINTAIN A MINIMUM 6' CLEARANCE FROM FACE OF EXISTING COLUMNS TO THE NEAREST POINT OF ANY TRENCH EXCAVATION. ALL EXCAVATION AND DEMOLITION WORK MINIMUM 6' NEAR AND AROUND CTA'S COLUMNS SHALL BE DONE BY HAND METHOD. PROTECT THE CTA'S STRUCTURES FROM CONSTRUCTION DEBRIS. THE CONTRACTOR SHALL RESTORE ALL DAMAGED STRUCTURES AND UTILITIES TO THE SATISFACTION OF THE CTA.

81. CONTRACTOR TO SUBMIT PROCESS/STAGING PLAN IDENTIFYING EQUIPMENT TYPES AND LOCATION FOR INSTALLATION OF THE NEW CAISSONS, NEW RETAINING WALL STRUCTURE, FOUNDATIONS INSTALLATION PROCESS PLAN, AND ERS/SHORING PLANS TO THE CTA FOR REVIEW. SHORING OR SUPPORT OF EXCAVATION ADJACENT TO THE CTA STRUCTURES SHALL BE DESIGNED AND SEALED BY AN ILLINOIS LICENSED S.E. AND NEEDS TO BE SUBMITTED TO CTA FOR REVIEW AND APPROVAL PRIOR TO START OF WORK.

82. CROWN/SUNESYS/SBA FACILITIES ARE PRESENT IN THE AREA OF CONSTRUCTION. USE EXTREME CAUTION NEAR ALL SUNESYS FACILITIES. HAND EXCAVATION IS REQUIRED TO LOCATE AND EXPOSE FIBER OPTIC FACILITIES PRIOR TO CROSSING AND WHEN WORKING WITHIN 3 FEET OF ALL SUNESYS FACILITIES. CONTACT DIGGER FOR LOCATES A MINIMUM OF 48 HOURS PRIOR TO START OF CONSTRUCTION.

ANY REFERENCE TO "UNIT PRICE" SHALL BE INTERPRETED AS CONTRACT "LUMP SUM PRICE"

STANDARD SYMBOLS

- SIGN
- 00.00 / 00.00 — ELEVATION OF TOP OF CURB AT POINT INDICATED / ELEVATION OF FLOW LINE OF GUTTER AT POINT INDICATED
- P — MAILBOX
- FIRE HYDRANT
- LIGHT STANDARD
- W — VALVE VAULT
- VALVE BOX
- VALVE, GAS
- METER, GAS
- POWER POLE
- TRAFFIC SIGNAL AND LIGHT STANDARD
- TRAFFIC SIGNAL
- TRAFFIC SIGNAL CONTROL BOX
- STREET LIGHTING CONTROL BOX
- PROPOSED INLET
- EXISTING INLET
- EXISTING INLET, TO BE REMOVED
- CATCH BASIN, EXISTING
- CATCH BASIN, PROPOSED
- CATCH BASIN TO BE REMOVED
- PARKING METER
- 6" — TREES, EXISTING WITH DIAMETER
- 6 — TREES TO BE REMOVED
- TREES TO BE PLANTED (SEE SCHEDULE FOR SIZE AND TYPE)
- 10.00 — ELEVATION
- DIRECTION OF FLOW
- SUMMIT
- BORING
- MANHOLE
- CO

W	EXISTING WATER DISTRIBUTION
G	EXISTING PEOPLES GAS
FO FO	EXISTING FIBER OPTIC CABLE
UGE	EXISTNG CITY UNDERGROUND ELECTRIC
T T	EXISTING AT&T
))))	EXISTING SEWER
/ G / /	ABANDON EXISTING GAS
W W	PROPOSED WATER RELOCATION
	PROPOSED STORM SEWER
G	PROPOSED GAS RELOCATION
	PROPOSED BURIED LIGHTING CABLE

UTILITY CONTACTS

AT&T
STAN PLODZIEN - LEGAL MANDATE ENGINEERING
EMAIL: SP3264@ATT.COM
PHONE: (630) 573-5453

COMMONWEALTH EDISON
MATT BARR - ENGINEERING DESIGN TECH
EMAIL: MATTHEW.BARR@COMED.COM
PHONE: (773) 509-3247

PEOPLES GAS
AXL DAVIS - DISTRIBUTION ENGINEERING
EMAIL: AXL.DAVIS@PEOPLESGASDELIVERY.COM
PHONE: (312) 240-3798

ADESTA/G4S
MATT LANZA - CONSTRUCTION MANAGER
EMAIL: MATT.LANZA@ADESTAGROUP.COM
PHONE: (331) 431-8226

CDWM - WATER (CTR)
ARMANDO SANCHEZ - EIT
EMAIL: ARMANDO.SANCHEZ@CTRWATER.NET
PHONE: (312) 894-4459

CDOT - DIVISION OF ELECTRICAL OPERATIONS
ADEEL ANSARI - ELECTRICAL ENGINEER IV
EMAIL: ADEEL.ANSARI@CITYOFCHICAGO.ORG
PHONE: (312) 743-1175

OFFICE OF EMERGENCY MANAGEMENT & COMMS.
FRANK KELLY
EMAIL: FRANK.KELLY@CITYOFCHICAGO.COM
PHONE: (312) 735-0524

MCI
JIM TODD
E-MAIL: JIMTODD@AMERITECH.NET
PHONE: (708) 458-6410

CHICAGO TRANSIT AUTHORITY
ABDIN CARRILLO - P.M. CONSTRUCTION OVERSIGHT
EMAIL: ACARRILLO@TRANSITCHICAGO.COM
PHONE: (312) 681-3913

TAMIKA PRESS - INSURANCE COORDINATOR
EMAIL: TPRESS@TRANSITCHICAGO.COM
PHONE: (312) 681-3134

JACK CHALABIAN - TRAFFIC COORDINATOR
EMAIL: JCHALABIAN@TRANSITCHICAGO.COM
PHONE: (312) 681-4176

CDWM - SEWERS
SID OSAKADA - PROJECT COORDINATOR
EMAIL: SID.OSAKADA@CITYOFCHICAGO.COM
PHONE: (312) 744-0344

DESIGN BY:	YA		01/27/2020	ISSUE FOR BID	YA	YMD	EJL		
DRAWN BY:	ML		10/04/2019	ISSUE FOR OUC EFP	CJB	YMD	EJL		
CHECKED BY:	EJL		06/14/2019	ISSUE FOR 100% DESIGN	LAB	YMD	EJL		
APPROVED BY:	EJL		06/14/2019	ISSUE FOR PERMIT	LAB	YMD	EJL		
CDOT/APPROVED BY:		NO.	DATE	REVISIONS	DES.	DRW.	CHK.	DCCO	CDOT

MILHOUSE
333 South Wabash Avenue
Suite 2901
Chicago, IL 60604
t 312.994.8701
f 312.987.0071
www.milhouseinc.com

PERKINS+WILL
The Wrigley Building
410 North Michigan Ave.
Suite 1600
Chicago, IL 60611
t 312.755.0770
f 312.755.0775
www.perkinswill.com

CDOT
CHICAGO DEPARTMENT OF TRANSPORTATION
DIVISION OF ENGINEERING

154 N DAMEN AVE - DAMEN GREEN LINE STATION

GENERAL NOTES

CDOT PROJECT D-7-135 | DATE: 01/27/2020

SPEC. NO.

DRAWING NO. C00-02

REVISION NO.

NOTES

1) THE HORIZONTAL CONTROL IS BASED ON THE ILLINOIS STATE PLANE COORDINATES, EAST ZONE (NAD83) BASED ON US SURVEY FEET, GRID COORDINATES, ILLINOIS EAST STATE PLANE PROVIDED BY TERRA ENGINEERING.

2) THE VERTICAL CONTROL IS BASED ON THE 1935 ADJUSTMENT U.S. LAKE SURVEY. CHICAGO CITY DATUM. CCD = 579.88 ABOVE MEAN TIDE NEW YORK.

3) LAKE STREET ALIGNMENT BEGINS AT STATION 25+00, N: 1901294.912, E:1161876.840 AND ENDS AT STATION 43+00, N: 1901396.404, E: 1163673.977

4) DAMEN AVENUE ALIGNMENT BEGINS AT STATION 402+00, N: 1901010.297, E: 1163032.723 AND ENDS AT STATION 409+00, N: 1901710.010, E: 1163032.723

CONTROL POINT	NORTHING	EASTING	LEVEL	STATION	OFFSET
1	1901306.654	1163014.100	17.086	36+36.10	52.67' RT
2	19011318.653	1162833.291	17.186	*	*
3	1901321.204	1162567.998	17.142	*	*
4	1901323.252	1162911.076	17.097	35+34.17	30.30' RT
5	1901323.379	1162948.343	17.263	35+71.40	32.25' RT
6	1901322.019	1162992.873	17.269	36+15.78	36.13' RT
7	1901325.722	1163074.240	17.003	36+97.25	37.02' RT
8	1901328.447	1163117.958	17.012	37+41.05	36.74' RT
9	1901332.924	1163163.938	17.039	37+87.21	34.85' RT
10	1901339.221	1163200.783	17.058	38+24.35	30.62' RT

CONTROL POINT	NORTHING	EASTING	LEVEL	STATION	OFFSET
11	1901406.941	1163236.491	17.236	*	*
12	1901407.838	1163204.055	17.181	38+31.45	37.71' LT
13	1901406.401	1163164.819	17.167	37+92.20	38.47' LT
14	1901399.781	1163137.277	17.054	37+64.33	33.40' LT
15	1901393.658	1163096.876	16.889	37+23.65	29.53' LT
16	1901393.236	1163009.673	18.113	36+36.58	34.01' LT
17	1901647.427	1163006.792	16.804	*	*
18	1901710.814	1163004.871	16.764	*	*
19	1901712.075	1163002.238	17.190	*	*
20	1901985.786	1162997.408	16.809	*	*

CONTROL POINT	NORTHING	EASTING	LEVEL	STATION	OFFSET
21	1901316.316	1162782.153	17.243	34+05.07	29.89' RT
22	1901314.339	1162737.289	17.094	33+60.17	29.32' RT
23	1901311.482	1162696.829	17.176	33+19.61	29.89' RT
24	1901375.053	1162747.050	17.221	33+73.35	30.74' LT
25	1901379.131	1162822.848	17.146	34+49.26	30.52' LT
26	1901382.060	1162882.230	17.043	35+08.71	30.08' LT
27	1901386.772	1162945.835	17.236	35+72.48	31.18' LT
28	1901388.693	1162992.604	17.208	36+19.28	30.45' LT
29	1901385.897	1163010.617	17.097	36+37.11	26.64' LT
30	1901391.758	1163010.946	17.183	36+37.17	32.47' LT

* CONTROL POINT NOT LOCATED ON THIS SHEET.

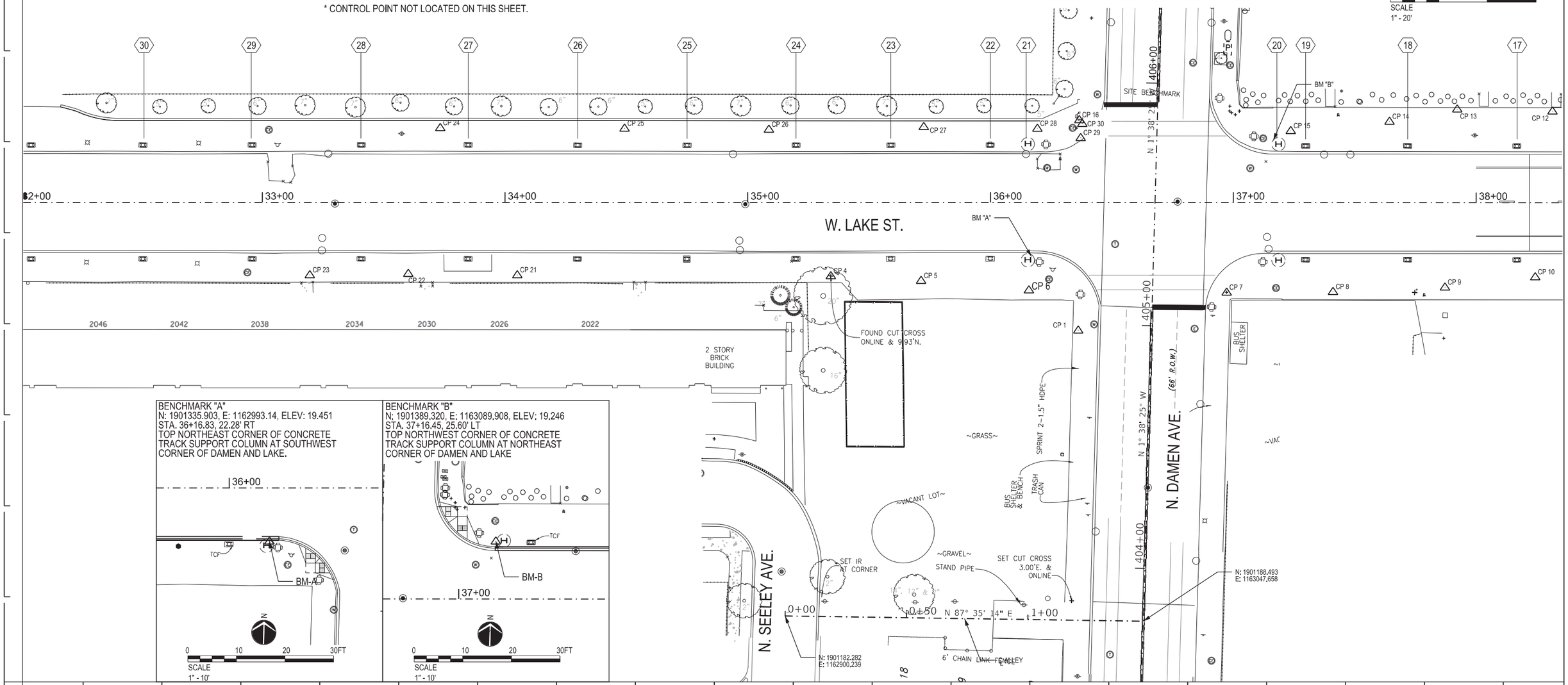

DESIGN BY:	YA		01/27/2020	ISSUE FOR BID	YA	YMD	EJL		
DRAWN BY:	ML		10/04/2019	ISSUE FOR OUC EFP	CJB	YMD	EJL		
CHECKED BY:	EJL		06/14/2019	ISSUE FOR 100% DESIGN	LAB	YMD	EJL		
APPROVED BY:	EJL		06/14/2019	ISSUE FOR PERMIT	LAB	YMD	EJL		
CDOT/APPROVED BY:		NO.	DATE	REVISIONS	DES.	DRW.	CHK.	DCCO	CDOT

MILHOUSE
333 South Wabash Avenue
Suite 2901
Chicago, IL 60604
t 312.994.8701
f 312.987.0071
www.milhouseinc.com

PERKINS+WILL
The Wrigley Building
410 North Michigan Ave.
Suite 1600
Chicago, IL 60611
t 312.755.0770
f 312.755.0775
www.perkinswill.com

CDOT
CHICAGO DEPARTMENT OF TRANSPORTATION
DIVISION OF ENGINEERING

154 N DAMEN AVE - DAMEN GREEN LINE STATION

ALIGNMENT, TIES, & BENCHMARKS

CDOT PROJECT D-7-135 | DATE: 01/27/2020

SPEC. NO.

DRAWING NO. C00-03

REVISION NO.

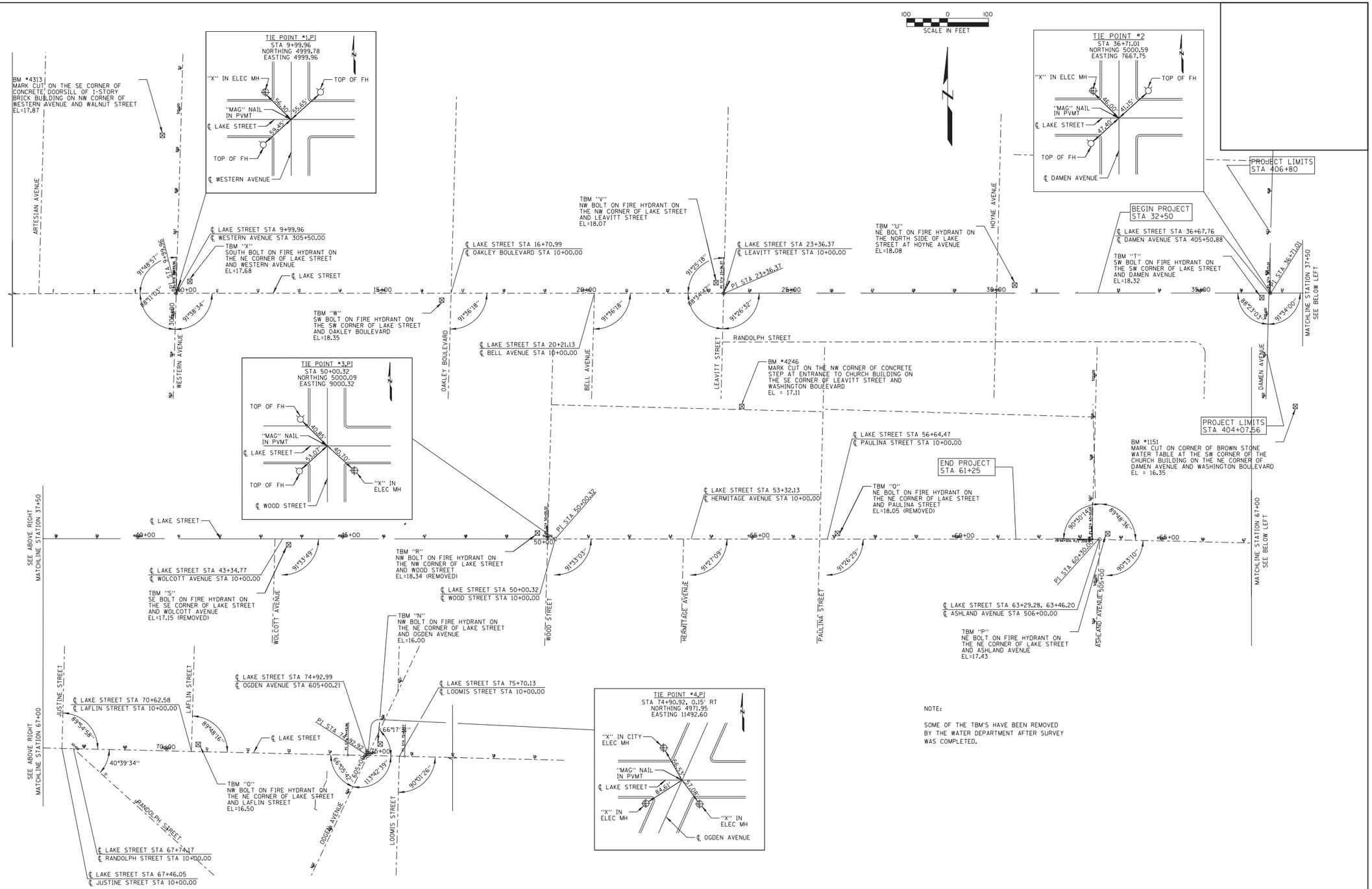

DESIGN BY:	YA		01/27/2020	ISSUE FOR BID	YA	YMD	EJL		
DRAWN BY:	ML		10/04/2019	ISSUE FOR OUC EFP	CJB	YMD	EJL		
CHECKED BY:	EJL		06/14/2019	ISSUE FOR 100% DESIGN	LAB	YMD	EJL		
APPROVED BY:	EJL		06/14/2019	ISSUE FOR PERMIT	LAB	YMD	EJL		
CDOT/APPROVED BY:		NO.	DATE	REVISIONS	DES.	DRW.	CHK.	DCCO	CDOT

MILHOUSE
333 South Wabash Avenue
Suite 2901
Chicago, IL 60604
t 312.994.8701
f 312.987.0071
www.milhouseinc.com

PERKINS+WILL
The Wrigley Building
410 North Michigan Ave.
Suite 1600
Chicago, IL 60611
t 312.755.0770
f 312.755.0775
www.perkinswill.com

CDOT
CHICAGO DEPARTMENT OF TRANSPORTATION
DIVISION OF ENGINEERING

154 N DAMEN AVE - DAMEN GREEN LINE STATION

ALIGNMENT, TIES, & BENCHMARKS

CDOT PROJECT D-7-135 | DATE: 01/27/2020

SPEC. NO.

DRAWING NO. C00-04

REVISION NO.

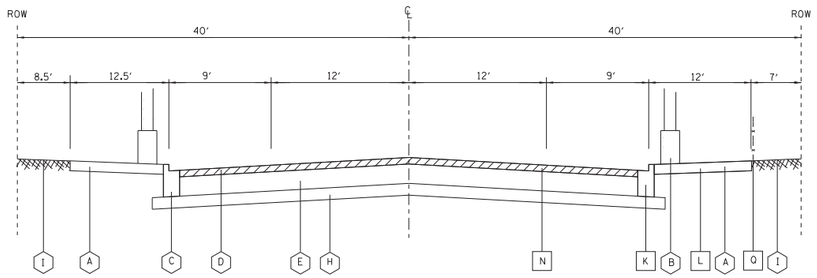

EXISTING TYPICAL SECTION
LAKE STREET
STATION 32+50 TO STATION 33+00

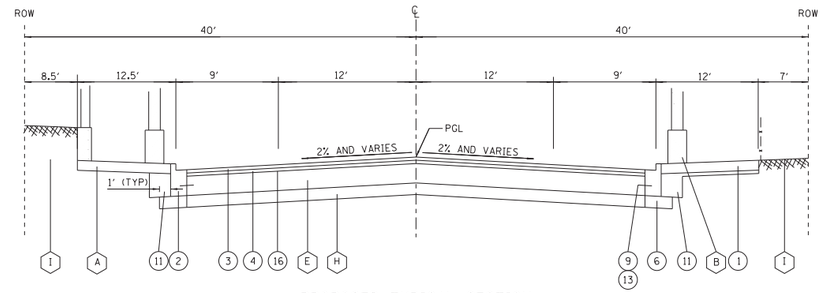

PROPOSED TYPICAL SECTION
LAKE STREET
STATION 32+50 TO STATION 33+00

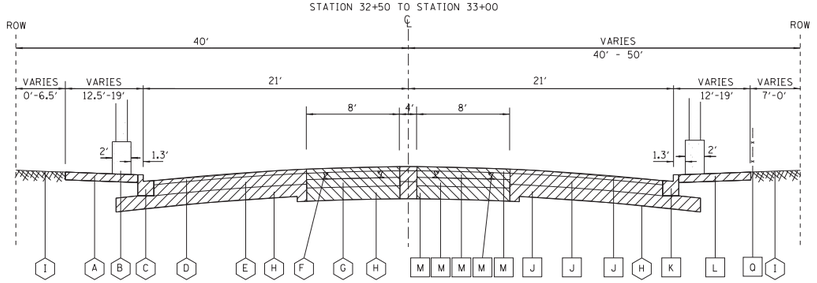

EXISTING TYPICAL SECTION
LAKE STREET
STATION 33+00 TO STATION 36+46

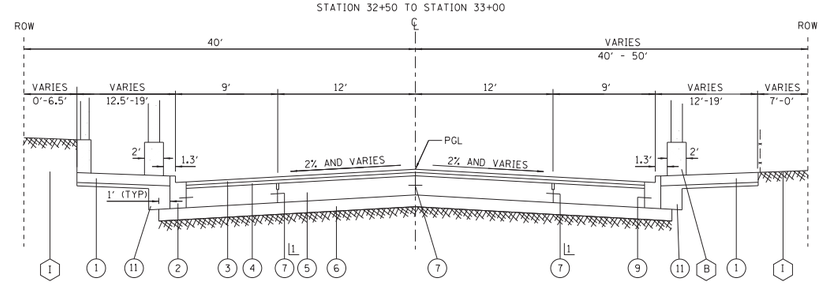

PROPOSED TYPICAL SECTION
LAKE STREET
STATION 33+00 TO STATION 36+46

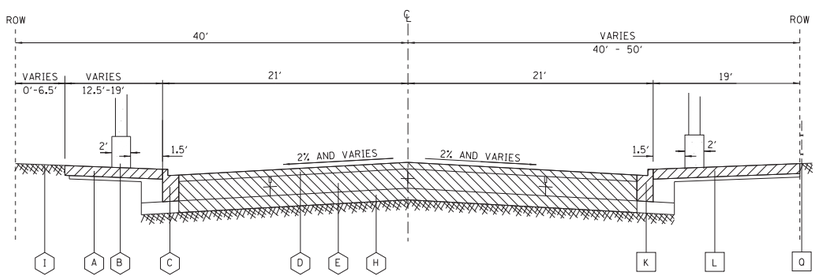

EXISTING TYPICAL SECTION
LAKE STREET
STATION 36+88 TO STATION 38+22

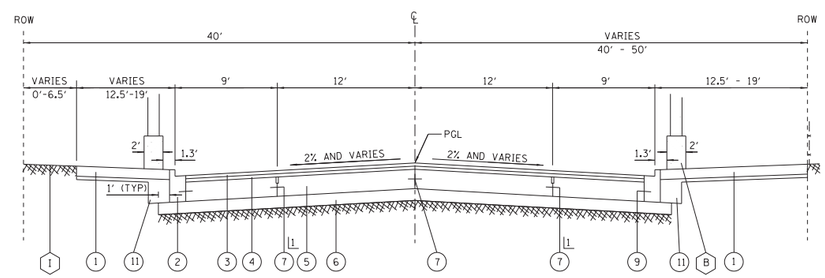

PROPOSED TYPICAL SECTION
LAKE STREET
STATION 36+88 TO STATION 38+22

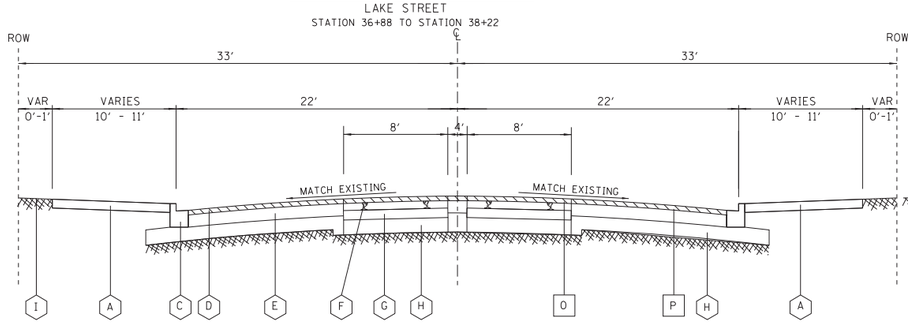

EXISTING/PROPOSED TYPICAL SECTION
DAMEN AVENUE
STATION 402+65 TO STATION 403+90

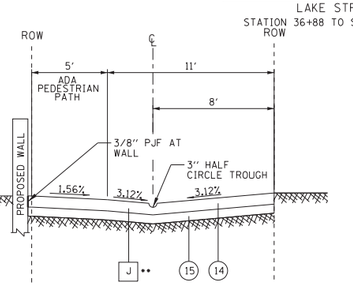

PROPOSED TYPICAL SECTION
ALLEY
STATION 0+15 TO STATION 1+15
** ALL EXISTING ALLEY PAVEMENT TO BE REMOVED WHERE PRESENT

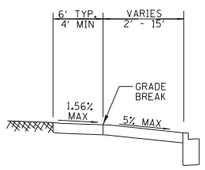

SIDEWALK DETAIL FOR LOCATIONS WITHOUT GRASSED PARKWAYS

NOTES:
1. A 1.56% MAXIMUM WALKING PATH AT LEAST 4′ WIDE MUST BE PROVIDED AT THE BACK OF THE SIDEWALK.
2. THE CONTRACTOR IS REQUIRED TO FRAME THE SIDEWALK AT THE GRADE BREAK.

EXISTING LEGEND

- A PCC SIDEWALK
- B CTA COLUMN
- C CURB AND GUTTER, TYPE B-V.12
- D HOT-MIX ASPHALT SURFACE AND BINDER COURSES, DEPTH VARIES
- E GRANITE PAVERS OR CONCRETE BASE, DEPTH VARIES
- F STREET CAR RAIL
- G RAILROAD TIES 8′
- H AGGREGATE SUBBASE, DEPTH VARIES
- I EXISTING GROUND LINE
- J PAVEMENT REMOVAL (TOP WEARING SURFACE TO SUBGRADE ELEV INCLUSIVE)
- K COMBINATION CURB AND GUTTER REMOVAL
- L SIDEWALK REMOVAL
- M RAILROAD TRACK REMOVAL (TOP WEARING SURFACE TO SUBGRADE ELEV OR BOTTOM OF TRACK INCLUSIVE)
- N HOT-MIX ASPHALT SURFACE REMOVAL (VARIABLE DEPTH) 4-1/4″
- O RAILROAD TRACK TOP WEARING SURFACE REMOVAL
- P PAVEMENT REMOVAL (SURFACE AND BINDER COURSES)
- Q EXISTING IRON FENCE

PROPOSED LEGEND

1. PCC SIDEWALK 5″
2. COMBINATION CONCRETE CURB & GUTTER TYPE B-V.12
3. HOT-MIX ASPHALT SURFACE COURSE, MIX ″D″, N70, 1½″
4. HOT-MIX ASPHALT BINDER COURSE, IL-19.0, N70, 2¼″ (DEPTH VARIES STATION 32+50 TO STATION 33+00, SEE DETAIL BELOW
5. PCC BASE COURSE 9″ or HES PCC BASE COURSE 9″ (SEE PLANS FOR LOCATIONS)
6. SUBBASE GRANULAR MATERIAL, TYPE B, 6″
7. LONGITUDINAL CONSTRUCTION JOINT NO. 4 x 30″ LONG DEFORMED TIE BARS (EPOXY COATED) AT 30″ O.C. (INCLUDED IN COST OF PCC BASE COURSE) (SEE CIVIL DETAIL SHEETS)
8. LONGITUDINAL SAWED JOINT NO. 4 X 30″ LONG DEFORMED TIE BARS (EPOXY COATED) AT 30″ O.C. (INCLUDED IN THE COST PCC BASE COURSE) (SEE CIVIL DETAIL SHEETS)
9. NO. 5 x 30″ TIE BARS (EPOXY COATED) AT 24″ O.C. (INCLUDED IN COST OF COMBINATION CONCRETE CURB & GUTTER) (SEE CIVIL DETAIL SHEETS)
10. TOPSOIL, FURNISH AND PLACE 4″ AND SODDING, SALT TOLERANT
11. POROUS GRANULAR EMBANKMENT (INCLUDED IN THE COST OF (2) COMBINATION CONCRETE CURB & GUTTER, TYPE B-V.12) (SEE DETAIL DRAINAGE SHEETS)
12. PCC PAVEMENT 12 ¾″
13. DRILL AND GROUT DOWEL BARS
14. PCC PAVEMENT 8″
15. SUBBASE GRANULAR MATERIAL, TYPE B, 8″
16. HOT-MIX ASPHALT LEVELING BINDER, 3/4″

1 AT THE CONTRACTOR'S OPTION, A LONGITUDINAL SAWED JOINT (8) MAY BE USED

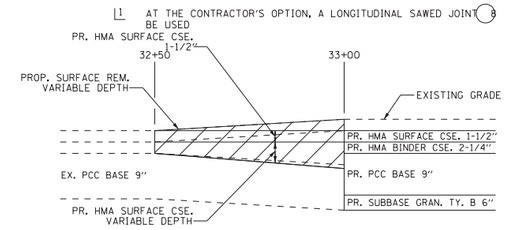

BASE COURSE MATCH IN DETAIL FROM PREVIOUS IMPROVEMENT

HOT-MIX ASPHALT MIXTURE REQUIREMENTS

THE FOLLOWING MIXTURE REQUIREMENTS ARE APPLICABLE FOR THIS PROJECT:

MIX TYPE	AIR VOIDS
SURFACE AND BINDER	
HOT-MIX ASPHALT BINDER COURSE, IL-19.0, N70 2¼″	4% @ 70 GYR
HOT-MIX ASPHALT SURFACE COURSE, MIX ″D″, N70 1½″	4% @ 70 GYR
LEV BIND (HM, N70)	4% @ 70 GYR

NOTES:

1. THE UNIT WEIGHT USED TO CALCULATE ALL HOT-MIX ASPHALT SURFACE MIXTURE QUANTITIES IS 112 LBS/SQ YD/IN.
2. THE ″AC TYPE″ FOR POLYMERIZED HMA MIXES SHALL BE ″SBS/SBR PG 76-22″ AND FOR NON-POLYMERIZED HMA THE ″AC TYPE″ SHALL BE PG 64-22 UNLESS MOTIFIED BY DISTRICT ONE SPECIAL PROVISIONS.
3. FOR ″PERCENT OF RAP″ SEE SPECIAL PROVISIONS.

DESIGN BY:	YA		01/27/2020	ISSUE FOR BID	YA	YMD	EJL		
DRAWN BY:	ML		10/04/2019	ISSUE FOR OUC EFP	CJB	YMD	EJL		
CHECKED BY:	EJL		06/14/2019	ISSUE FOR 100% DESIGN	LAB	YMD	EJL		
APPROVED BY:	EJL		06/14/2019	ISSUE FOR PERMIT	LAB	YMD	EJL		
CDOT/APPROVED BY:		NO.	DATE	REVISIONS	DES.	DRW.	CHK.	DCCO	CDOT

MILHOUSE
333 South Wabash Avenue
Suite 2901
Chicago, IL 60604
t 312.994.8701
f 312.987.0071
www.milhouseinc.com

PERKINS+WILL
The Wrigley Building
410 North Michigan Ave.
Suite 1600
Chicago, IL 60611
t 312.755.0770
f 312.755.0775
www.perkinswill.com

CDOT
CHICAGO DEPARTMENT OF TRANSPORTATION
DIVISION OF ENGINEERING

154 N DAMEN AVE - DAMEN GREEN LINE STATION

TYPICAL SECTIONS

CDOT PROJECT D-7-135 | DATE: 01/27/2020

SPEC. NO.

DRAWING NO. C00-06

REVISION NO.

NOTES

1) THE CONTRACTOR IS RESPONSIBLE FOR PROTECTING FROM DAMAGE ADJACENT BUILDINGS AND THE CTA STRUCTURE THROUGHOUT CONSTRUCTION.

2) THE EXISTING STREET LIGHTING CONTROLLER SHALL REMAIN IN SERVICE UNTIL THE PROPOSED STREET LIGHTING CONTROLLER IS INSTALLED, CONNECTED AND OPERATIONAL, AS APPROVED BY THE COMMISSIONER.

3) THE EXISTING UNDERPASS TYPE LUMINAIRES SHALL REMAIN IN SERVICE UNTIL THE PROPOSED TWIN ARM ORNAMENTAL STREET LIGHTING UNITS ARE INSTALLED, CONNECTED AND OPERATIONAL, AS APPROVED BY THE COMMISSIONER.

LEGEND

CITY ELECTRIC	UGE
COMED	CECO
FIBER OPTIC	FO
NATURAL GAS	G
TELECOM	T
COMBINED SEWER (CS)	
WATER DISTRIBUTION (WM)	W
ABANDONED UTILITY LINE	

N

0 20 40 60FT

SCALE
1" - 20'

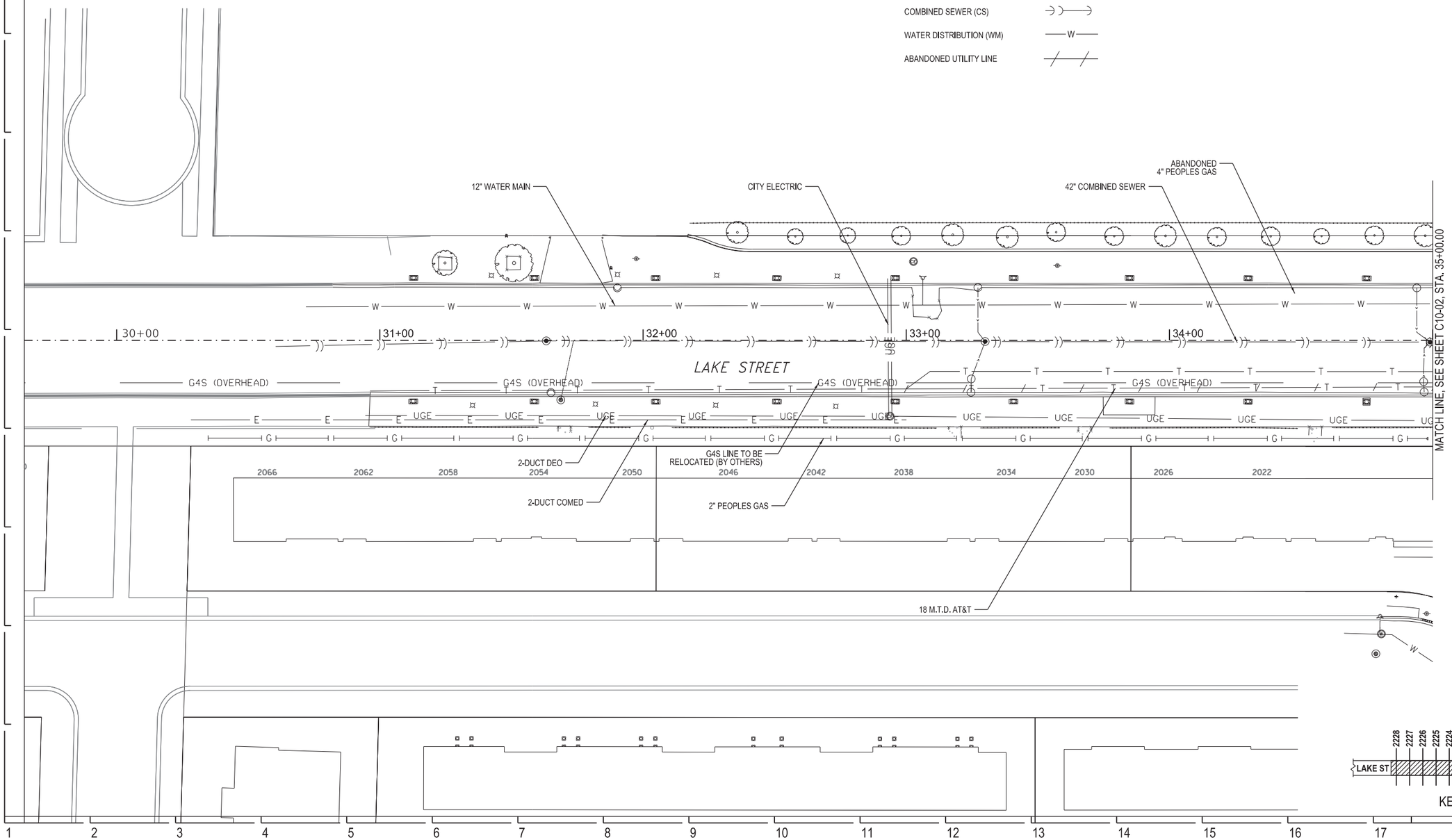

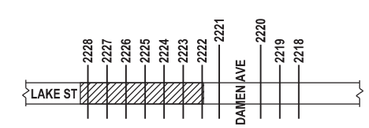

KEY PLAN

DESIGN BY:	YA		01/27/2020	ISSUE FOR BID	YA	YMD	EJL		
DRAWN BY:	ML		10/04/2019	ISSUE FOR OUC EFP	CJB	YMD	EJL		
CHECKED BY:	EJL		06/14/2019	ISSUE FOR 100% DESIGN	LAB	YMD	EJL		
APPROVED BY:	EJL		06/14/2019	ISSUE FOR PERMIT	LAB	YMD	EJL		
CDOT/APPROVED BY:		NO.	DATE	REVISIONS	DES.	DRW.	CHK.	DCCO	CDOT

MILHOUSE
333 South Wabash Avenue
Suite 2901
Chicago, IL 60604
t 312.994.8701
f 312.987.0071
www.milhouseinc.com

PERKINS+WILL
The Wrigley Building
410 North Michigan Ave.
Suite 1600
Chicago, IL 60611
t 312.755.0770
f 312.755.0775
www.perkinswill.com

CDOT
CHICAGO DEPARTMENT OF TRANSPORTATION
DIVISION OF ENGINEERING

154 N DAMEN AVE - DAMEN GREEN LINE STATION

EXISTING CONDITIONS

CDOT PROJECT D-7-135

DATE: 01/27/2020

SPEC. NO.

DRAWING NO.
C10-01

REVISION NO.

NOTES

1) THE CONTRACTOR IS RESPONSIBLE FOR PROTECTING FROM DAMAGE ADJACENT BUILDINGS AND THE CTA STRUCTURE THROUGHOUT CONSTRUCTION.

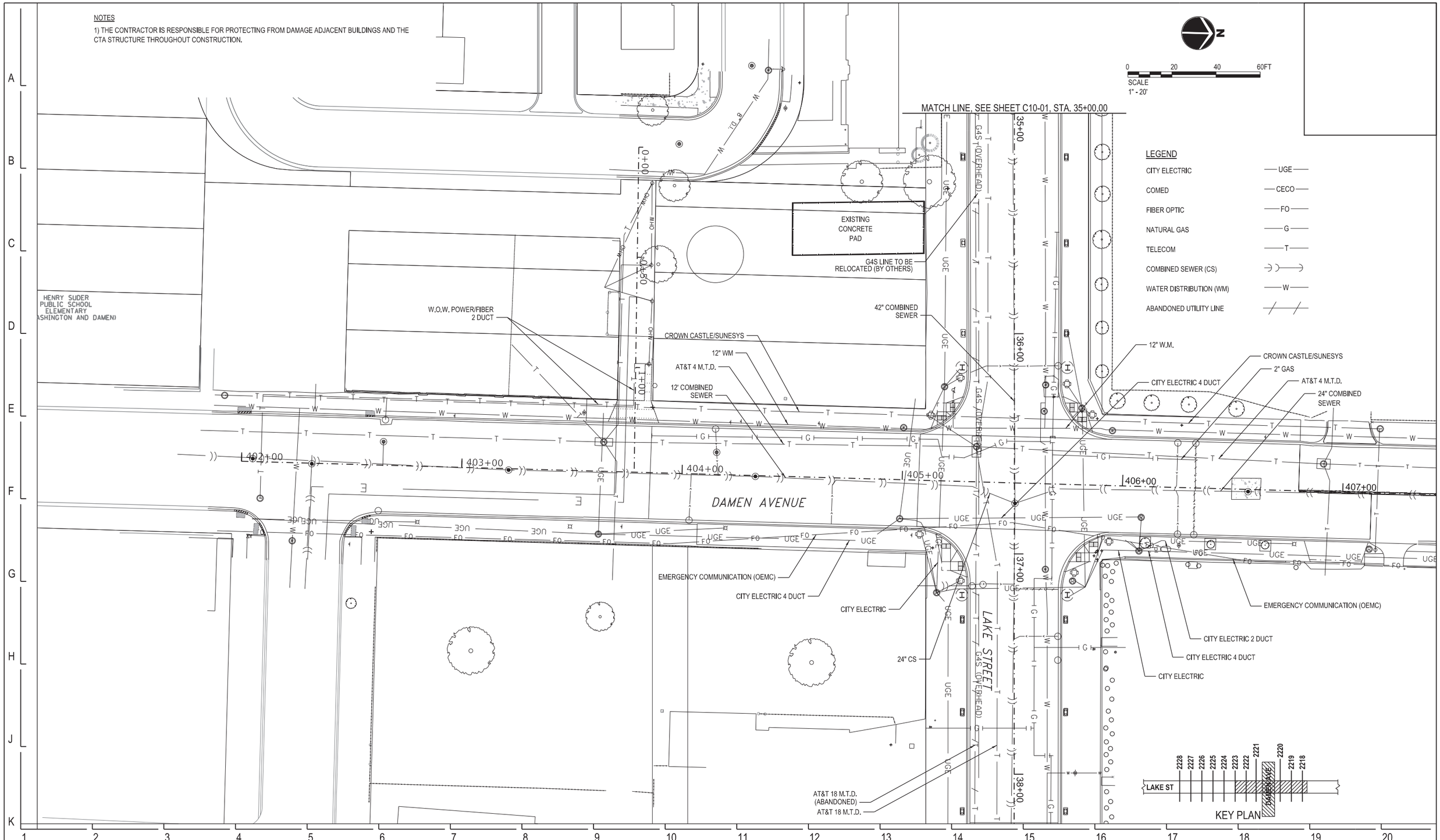

DESIGN BY:	YA		01/27/2020	ISSUE FOR BID	YA	YMD	EJL		
DRAWN BY:	ML		10/04/2019	ISSUE FOR OUC EFP	CJB	YMD	EJL		
CHECKED BY:	EJL		06/14/2019	ISSUE FOR 100% DESIGN	LAB	YMD	EJL		
APPROVED BY:	EJL		06/14/2019	ISSUE FOR PERMIT	LAB	YMD	EJL		
CDOT/APPROVED BY:		NO.	DATE	REVISIONS	DES.	DRW.	CHK.	DCCO	CDOT

MILHOUSE
333 South Wabash Avenue
Suite 2901
Chicago, IL 60604
t 312.994.8701
f 312.987.0071
www.milhouseinc.com

PERKINS+WILL
The Wrigley Building
410 North Michigan Ave.
Suite 1600
Chicago, IL 60611
t 312.755.0770
f 312.755.0775
www.perkinswill.com

CDOT
CHICAGO DEPARTMENT OF TRANSPORTATION
DIVISION OF ENGINEERING

154 N DAMEN AVE - DAMEN GREEN LINE STATION

EXISTING CONDITIONS

CDOT PROJECT D-7-135

DATE: 01/27/2020

SPEC. NO.

DRAWING NO. C10-02

REVISION NO.

LEGEND

- MILL
- FULL-DEPTH PAVEMENT REMOVAL
- SIDEWALK REMOVAL
- LINEAR REMOVAL

N

0 20 40 60FT
SCALE
1" - 20'

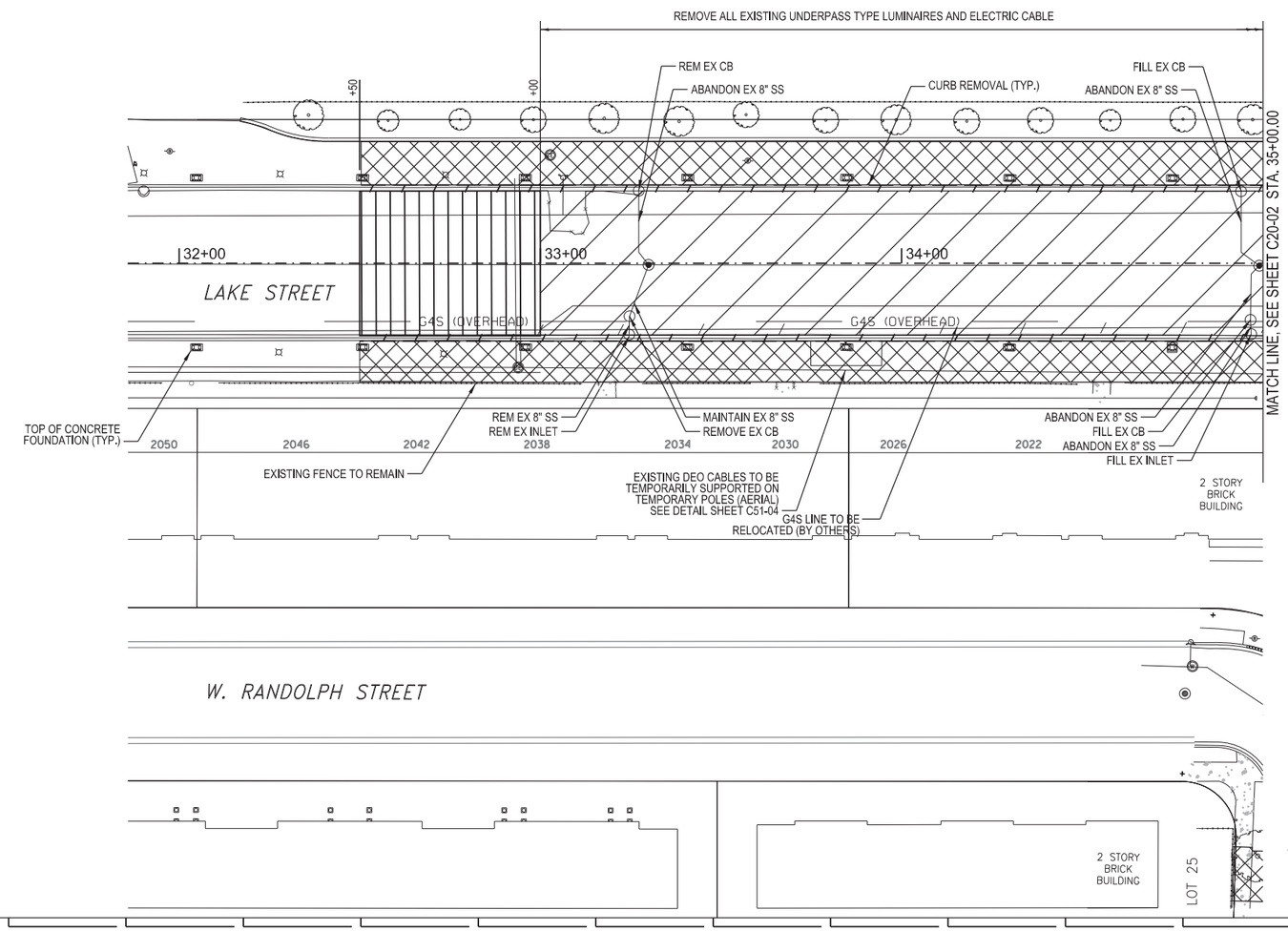

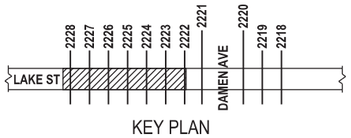

KEY PLAN

DESIGN BY:	YA		01/27/2020	ISSUE FOR BID	YA	YMD	EJL		
DRAWN BY:	ML		10/04/2019	ISSUE FOR OUC EFP	CJB	YMD	EJL		
CHECKED BY:	EJL		06/14/2019	ISSUE FOR 100% DESIGN	LAB	YMD	EJL		
APPROVED BY:	EJL		06/14/2019	ISSUE FOR PERMIT	LAB	YMD	EJL		
CDOT/APPROVED BY:		NO.	DATE	REVISIONS	DES.	DRW.	CHK.	DCCO	CDOT

MILHOUSE
333 South Wabash Avenue
Suite 2901
Chicago, IL 60604
t 312.994.8701
f 312.987.0071
www.milhouseinc.com

PERKINS+WILL
The Wrigley Building
410 North Michigan Ave.
Suite 1600
Chicago, IL 60611
t 312.755.0770
f 312.755.0775
www.perkinswill.com

CDOT
CHICAGO DEPARTMENT OF TRANSPORTATION
DIVISION OF ENGINEERING

154 N DAMEN AVE - DAMEN GREEN LINE STATION

DEMOLITION PLAN

CDOT PROJECT D-7-135

DATE: 01/27/2020

SPEC. NO.

DRAWING NO. C20-01

REVISION NO.

LEGEND

- MILL
- FULL-DEPTH PAVEMENT REMOVAL
- SIDEWALK REMOVAL
- LINEAR REMOVAL
- TREE REMOVAL

NOTES

1) REMOVAL OF TEMPORARY SHORING STORAGE CONCETE PAD, FENCING, AND SITE RUBBLE TO BE INLCUDED IN THIS CONTRACT.
2) CONTRACTOR TO FIELD VERIFY LOCATION AND DEPTH OF EXISTING UTILITIES.

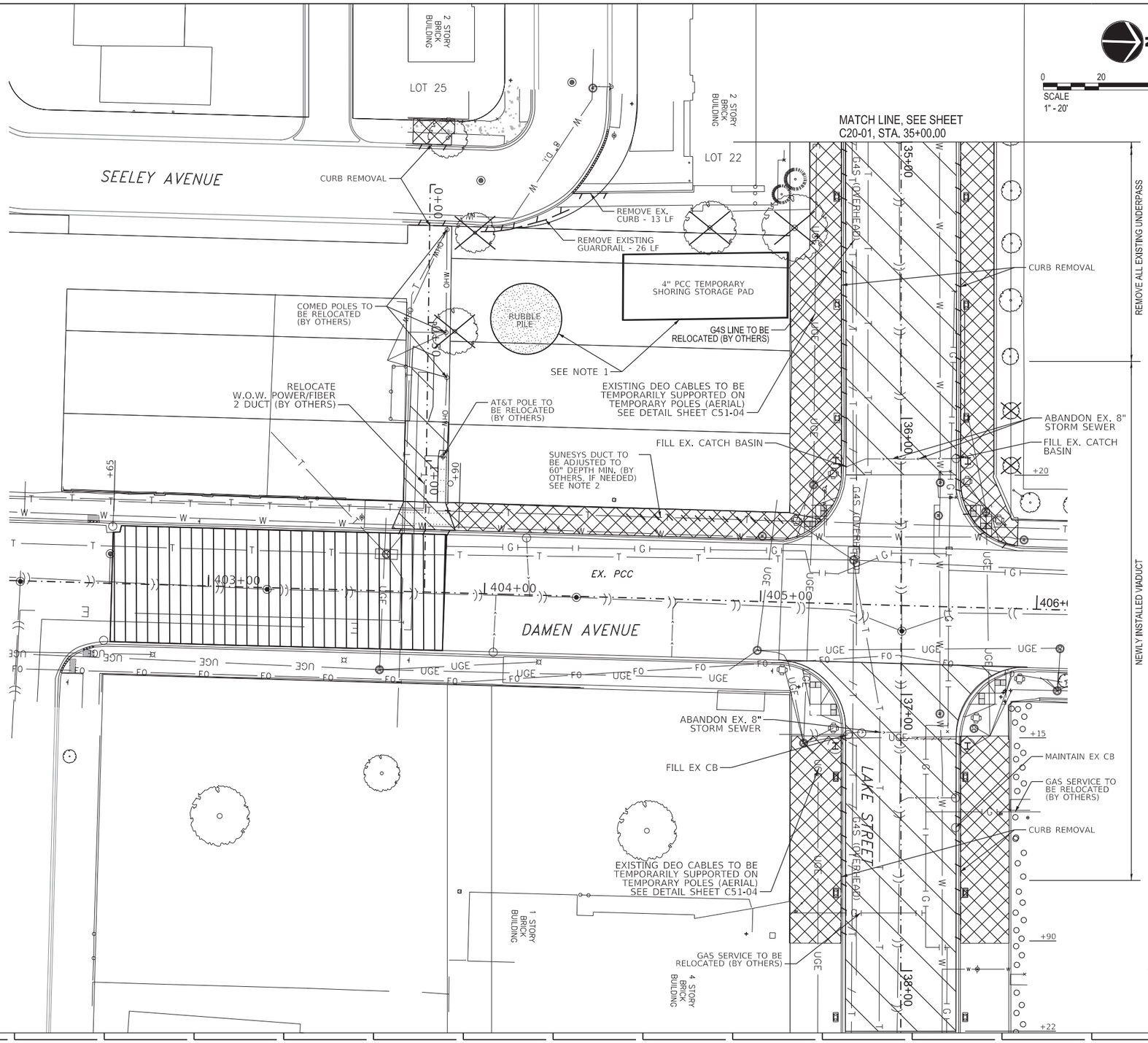

DESIGN BY:	YA		01/27/2020	ISSUE FOR BID	YA	YMD	EJL		
DRAWN BY:	ML		10/04/2019	ISSUE FOR OUC EFP	CJB	YMD	EJL		
CHECKED BY:	EJL		06/14/2019	ISSUE FOR 100% DESIGN	LAB	YMD	EJL		
APPROVED BY:	EJL		06/14/2019	ISSUE FOR PERMIT	LAB	YMD	EJL		
CDOT/APPROVED BY:		NO.	DATE	REVISIONS	DES.	DRW.	CHK.	DCCO	CDOT

MILHOUSE
333 South Wabash Avenue
Suite 2901
Chicago, IL 60604
t 312.994.8701
f 312.987.0071
www.milhouseinc.com

PERKINS+WILL
The Wrigley Building
410 North Michigan Ave.
Suite 1600
Chicago, IL 60611
t 312.755.0770
f 312.755.0775
www.perkinswill.com

CDOT
CHICAGO DEPARTMENT OF TRANSPORTATION
DIVISION OF ENGINEERING

154 N DAMEN AVE - DAMEN GREEN LINE STATION

DEMOLITION PLAN

CDOT PROJECT D-7-135

DATE: 01/27/2020

SPEC. NO.

DRAWING NO. C20-02

REVISION NO.

CONSTRUCTION STAGING

ADVANCE STAGE (PRE-CONSTRUCTION)

1. UTILTY ADJUSTMENT MUST BE PERFORMED USING STANDARD 701501 FOR DAYTIME LANE CLOSURE
2. INSTALL LIGHTING AS REQUIRED.
3. NOTIFY BUSINESSES OF ENTRANCE CLOSURE DATES.

STAGE 1

1. CLOSE LAKE STREET EAST AND WEST OF DAMEN AVE. EASTBOUND AND WESTBOUND DETOUR ROUTES SHALL BE IN PLACE DURING THIS STAGE. ESTABLISH TRAFFIC CONTROL AS SHOWN ON THE PLAN SHEETS.
2. REMOVE EXISITNG PAVEMENT, CURB AND GUTTER, AND SPECIFIED STORM SEWER AND DRAINAGE STRUCTURES.
3. BEGIN CONSTRUCTION OF CTA PILE CAPS, COLUMNS AND COLUMN CONNECTIONS AS SHOWN IN THE STRUCTURAL PHASING PLANS FOR BENTS WEST OF DAMEN AVENUE.
4. CONSTRUCT CTA PILE CAPS, COLUMNS AND COLUMN CONNECTIONS AS SHOWN IN THE STRUCTURAL PHASING PLANS FOR BENTS EAST OF DAMEN AVENUE.
5. CONSTRUCT SUB-BASE, COMBINATION CONCRETE CURB AND GUTTER, CONCRETE BASE, HMA BINDER AND SURFACE, AND SIDEWALK EAST OF DAMEN AVENUE AS SHOWN ON PLANS.

STAGE 2

1. CONTINUE LAKE STREET CLOSURE WEST OF DAMEN AVENUE. WESTBOUND DETOUR ROUTES SHALL BE IN PLACE DURING THIS STAGE. EASTBOUND DETOUR IN PLACE WEST OF DAMEN AVENUE.
2. CLOSE NORTH AND SOUTH SIDE OF LAKE STREET EAST OF DAMEN AVENUE. MAINTAIN EASTBOUND LAKE STREET TRAFFIC EAST OF DAMEN.
3. CONTINUE CONSTRUCTION OF CTA PILE CAPS, COLUMNS, COLUMN CONNECTIONS, PLATFORM STEEL, AS SHOWN IN THE STRUCTURAL PHASING PLANS FOR BENTS WEST OF DAMEN AVENUE.
4. CONTINUE PLATFORM STEEL FOR BENTS EAST OF DAMEN.
5. CONSTRUCT SUB-BASE, COMBINATION CONCRETE CURB AND GUTTER, CONCRETE BASE, HMA BINDER AND SURFACE, AND SIDEWALK WEST OF DAMEN AVENUE AS SHOWN ON PLANS.

STAGE 3A

1. CLOSE NORTH SIDE OF LAKE STREET. MAINTAINING TWO-WAY LAKE STREET TRAFFIC.
2. CONTINUE NORTH SIDE PLATFORM WORK INCLUDING PRECAST, CANOPY STEEL GLASS, PLUMBING, LIGHTING, AND COMMUNICATIONS.
3. BRIDGE ERECTION TO BE COMPLETED DURING WEEKEND/NIGHT CLOSURE AFTER COMPLETION OF NORTH TOWER SUPERSTRUCTURE - PRIOR TO END OF 3A.

STAGE 3B

1. CLOSE SOUTH SIDE OF LAKE STREET. MAINTAIN TWO-WAY LAKE STREET TRAFFIC.
2. CONTINUE SOUTH SIDE PLATFORM WORK INCLUDING PRECAST, CANOPY STEEL, GLASS PLUMBING, LIGHTING, AND COMMUNICATIONS. (BEGIN BRIDGE GLASS INSTALLATION)

STAGE 4A-4C

1. CONTINUE CONSTRUCTION OF CTA DAMEN GREEN LINE STATION.
2. CONSTRUCT ALLEY UTILITIES AND PAVEMENT SOUTH OF STATION.
3. COMPLETE PLAZA UTILITES AND PAVING
4. MILL AND RESURFACE DAMEN AVENUE SOUTH ALLEY.

GENERAL NOTES

1. THE CONTRACTOR'S ATTENTION IS DIRECTED TO THE FACT THAT WHEN WORK COMMENCES, THE CONTRACTOR MUST ASSUME THE MAINTENANCE OF ANY PAVEMENT, DRAINAGE FACILITIES, TRAFFIC CONTROL SIGNS, TRAFFIC SIGNALS, LIGHTING, PAVEMENT MARKINGS, AND OTHER APPURTENANCES OF ROADWAYS WITHIN THE LIMITS OF THE CONTRACT WHICH ARE USED BY THE PUBLIC DURING CONSTRUCTION. THE CONTRACTOR MUST RETAIN THIS MAINTENANCE RESPONSIBILITY UNTIL THE CITY ASSUMES THE MAINTENANCE. THE NEED FOR SNOW AND ICE CONTROL DURING THE CONSTRUCTION PERIOD WILL BE ACCOMMODATED FOR BY OTHERS.
2. TEMPORARY TRAFFIC CONTROL SIGNS MUST BE INSTALLED AT THE DIRECTION AND UNDER THE SUPERVISION OF THE COMMISSIONER. SEVEN (7) DAYS NOTICE MUST BE GIVEN TO THE COMMISSIONER FOR DIRECTION OF SIGNING. THE CONTRACTOR MUST COORDINATE THE MAINTENANCE OF TRAFFIC WITH LANE CLOSURES OF CONCURRENT PROJECTS.
3. THE CONTRACTOR WILL BE REQUIRED TO PROVIDE AND MAINTAIN ACCESS TO ALL PRIVATE AND COMMERCIAL PROPERTY WITHIN THE WORK AREAS DURING THE CONSTRUCTION PERIOD, WHICH MAY INCLUDE THE PROVISION OF TEMPORARY AGGREGATE IN THE WORK ZONE TO ALLOW TRUCKS TO TURN INTO LOADING BAYS.
4. DURING CONSTRUCTION OPERATIONS, THE CONTRACTOR MUST TAKE ALL NECESSARY PRECAUTIONS TO PROTECT ADJACENT TRAFFIC LANES OPEN TO TRAFFIC FROM DEBRIS BEING BLOWN OR OTHERWISE REMOVED FROM THE CONSTRUCTION AREAS. THE CONTRACTOR WILL ALSO BE RESPONSIBLE FOR KEEPING DEBRIS OFF THE ADJACENT TRAVELED LANE SURFACE.
5. THE CONTRACTOR'S VEHICLES MUST ALWAYS MOVE WITH AND NOT AGAINST OR ACROSS THE FLOW OF TRAFFIC. THESE VEHICLES MUST ENTER AND LEAVE WORK AREAS IN A MANNER THAT WILL NOT BE HAZARDOUS TO OR INTERFERE WITH NORMAL TRAFFIC AND MUST NOT STOP OR PARK EXCEPT WITHIN DESIGNATED WORK AREAS. PERSONAL VEHICLES WILL NOT BE PERMITTED TO PARK WITHIN THE RIGHT-OF-WAY EXCEPT IN SPECIFIC AREAS DESIGNATED BY THE COMMISSIONER.
6. THE CONTRACTOR MUST WALK THROUGH THE JOB BEFORE CONSTRUCTION ALONG WITH AUTHORIZED REPRESENTATIVE OF THE CITY OF CHICAGO TO CONFIRM THE COUNT OF STREET SIGNS AND PAY AND DISPLAY VENDING STATIONS.
7. THE CONTRACTOR MUST REMOVE ALL EXISTING PAVEMENT MARKINGS WHICH CONFLICT WITH THE DESIGNATED TRAFFIC CONTROL PLAN. THIS WORK WILL BE PAID FOR AS PAVEMENT MARKING REMOVAL. THE CONTRACTOR MUST RESTORE ALL PAVEMENT MARKINGS DESTROYED DURING CONSTRUCTION.
8. ALL CONSTRUCTION SIGNS, BARRICADES, LIGHTS, FLAGMAN, FLEXIBLE DELINEATORS, IMPACT ATTENUATOR ETC., MUST BE PROVIDED BY THE CONTRACTOR.
9. ADDITIONAL TRAFFIC CONTROL SIGNS MAY BE REQUIRED AS DIRECTED BY THE DIVISION OF INFRASTRUCTURE MANAGEMENT. THE COST WILL BE CONSIDERED INCLUDED IN THE COST OF TRAFFIC CONTROL AND PROTECTION.
10. ALL SIGNS MUST MEET CITY AND THE MANUAL ON UNIFORM TRAFFIC CONTROL DEVICES STANDARDS AND MUST MEET WITH APPROVAL OF THE DIVISION OF INFRASTRUCTURE MANAGEMENT, REGARDING LOCATION, TYPE, SIZE, NUMBER, AND DURATION.
11. FOR TYPICAL SIGN INSTALLATIONS, SEE IDOT HIGHWAY STANDARDS. FOR IDOT TRAFFIC CONTROL STANDARDS. SEE SHEETS C41-01 TO C41-03.
12. ALL SIDEWALK CLOSURES MUST FOLLOW CDOT STANDARD CROSSWALK AND SIDEWALK CLOSURE SHEET A-6-11. THE SIDEWALK MUST BE OPEN ON AT LEAST ONE SIDE OF THE STREET AT ALL TIMES WHERE FEASIBLE.
13. PAINT MARKINGS MUST BE USED ON ALL TEMPORARY SURFACES AND EXISTING SURFACES TO BE REMOVED. MARKING TAPE MUST BE USED ON ALL PERMANENT SURFACES OR EXISTING SURFACES TO REMAIN.
14. ALL WORK REQUIRED FOR THE PLACEMENT AND MAINTENANCE OF THE DETOUR ROUTE AND SIGNING WILL BE INCLUDED IN THE COST OF TRAFFIC CONTROL AND PROTECTION.
15. ALL TRAFFIC SIGNAL HEADS NOT IN OPERATION DURING ANY SPECIFIC PHASE MUST BE COVERED.
16. HMA SURFACE COURSE, MIX "D", N70 MUST BE USED TO CONSTRUCT ALL TEMPORARY RAMPS BETWEEN EXISTING AND PROPOSED PAVEMENT SURFACES NECESSARY FOR TRAFFIC STAGING AT THE INTERSECTIONS OF LAKE STREET AND THE CROSS STREETS. REMOVAL OF THIS MATERIAL WILL BE CONSIDERED INCLUDED IN THE COST OF TEMPORARY RAMP. SEE DETAIL ON THIS SHEET.
17. CHANGEABLE MESSAGE SIGNS MUST BE INSTALLED TWO WEEKS PRIOR TO ANY CONSTRUCTION ACTIVITIES.
18. TEMPORARY PATCHES NECESSARY DUE TO PILE CAPS WILL BE HMA BINDER COURSE, IL-19MM, 8"
19. THE CONTRACTOR IS TO PROVIDE A PEDESTRIAN TRAFFIC CONTROL PLAN AS PER THE REQUIREMENTS OF ITEM TRAFFIC CONTROL AND PROTECTION.
20. BUSINESSES OR THE ALDERMAN MIGHT REQUEST ADDITIONAL TRAFFIC CONTROL SIGNAGE FOR THE AREA, LIKE "BUSINESS OPEN DURING CONSTRUCTION", "LOCAL TRAFFIC ONLY", "NO THRU TRAFFIC" OR OTHER INFORMATION SIGNING. THE ADDITIONAL SIGNS REQUESTED SHALL BE INCLUDED IN THE COST OF THE PROJECT.
21. CTA TRAFFIC PLANNING MUST BE NOTIFIED AT LEAST 30 DAYS IN ADVANCE OF THE TIME THAT CONSTRUCTION WILL COMMENCE.
22. TRAFFIC.PLANNING@TRANSITCHICAGO.COM
    -OR-
    JACK CHALABIAN
    COORDINATOR, TRAFFIC PLANNING
    312-681-4176
    JCHALABIAN@TRANSITCHICAGO.COM
23. REFUSE PICKUP AND FIRE HYDRANT ACCESS TO BE MAINTAINED THROUGHOUT CONSTRUCTION.
24. PEDESTRIAN ACCESS TO BUSINESS DOORS TO BE MAINTAINED THROUGHOUT CONSTRUCTION.
25. LAKE STREET CLOSURES ACCROSS DAMEN AVENUE LIMITED TO NIGHT TIME OPERATIONS AS APPROVED BY COMMISSIONAR.
26. ACCESS TO CTA BUS STOP ON DAMEN TO BE MAINTAINED THROUGHOUT CONSTRUCTION.

LEGEND

- CONTRACTOR STAGING AREA
- DRUM WITH STEADY BURN LIGHTS ø 50' C - C (TYP) 25' C - C IN TAPERS, CURVES, AND RADII
- TYPE III BARRICADE
- SIGN ON PORTABLE OR PERMANENT SUPPORT
- FLASHING LIGHT
- DIRECTION OF TRAFFIC FLOW
- ARROW BOARD
- TEMPORARY CONCRETE BARRIER
- — X — X — TEMPORARY CHAIN LINK FENCE WITH GREEN MESH SCREEN
- TEMPORARY NARROW IMPACT ATTENUATOR TEST LEVEL 3
- MAINTENANCE OF TRAFFIC DRUM/ BARREL
- TEMPORARY ADA RAMP

1. SOLID WHITE LINE, 4"
2. SOLID YELLOW LINE, 4"
3. DOUBLE YELLOW LINE, 4", 8" C-C
4. SOLID YELLOW LINE, 12", 20' C-C
5. SOLID WHITE LINE, 24"
6. SOLID WHITE LINE, 6"
7. SOLID WHITE LINE, 6" 2' SKIP 6' DASH

DESIGN BY:	YA		01/27/2020	ISSUE FOR BID	YA	YMD	EJL		
DRAWN BY:	ML		10/04/2019	ISSUE FOR OUC EFP	CJB	YMD	EJL		
CHECKED BY:	EJL		06/14/2019	ISSUE FOR 100% DESIGN	LAB	YMD	EJL		
APPROVED BY:	EJL		06/14/2019	ISSUE FOR PERMIT	LAB	YMD	EJL		
CDOT/APPROVED BY:		NO.	DATE	REVISIONS	DES.	DRW.	CHK.	DCCO	CDOT

MILHOUSE
333 South Wabash Avenue
Suite 2901
Chicago, IL 60604
t 312.994.8701
f 312.987.0071
www.milhouseinc.com

PERKINS+WILL
The Wrigley Building
410 North Michigan Ave.
Suite 1600
Chicago, IL 60611
t 312.755.0770
f 312.755.0775
www.perkinswill.com

CDOT
CHICAGO DEPARTMENT OF TRANSPORTATION
DIVISION OF ENGINEERING

154 N DAMEN AVE - DAMEN GREEN LINE STATION

MAINTENANCE OF TRAFFIC - STAGING NOTES

CDOT PROJECT D-7-135 | DATE: 01/27/2020

SPEC. NO.

DRAWING NO. C30-01

REVISION NO.

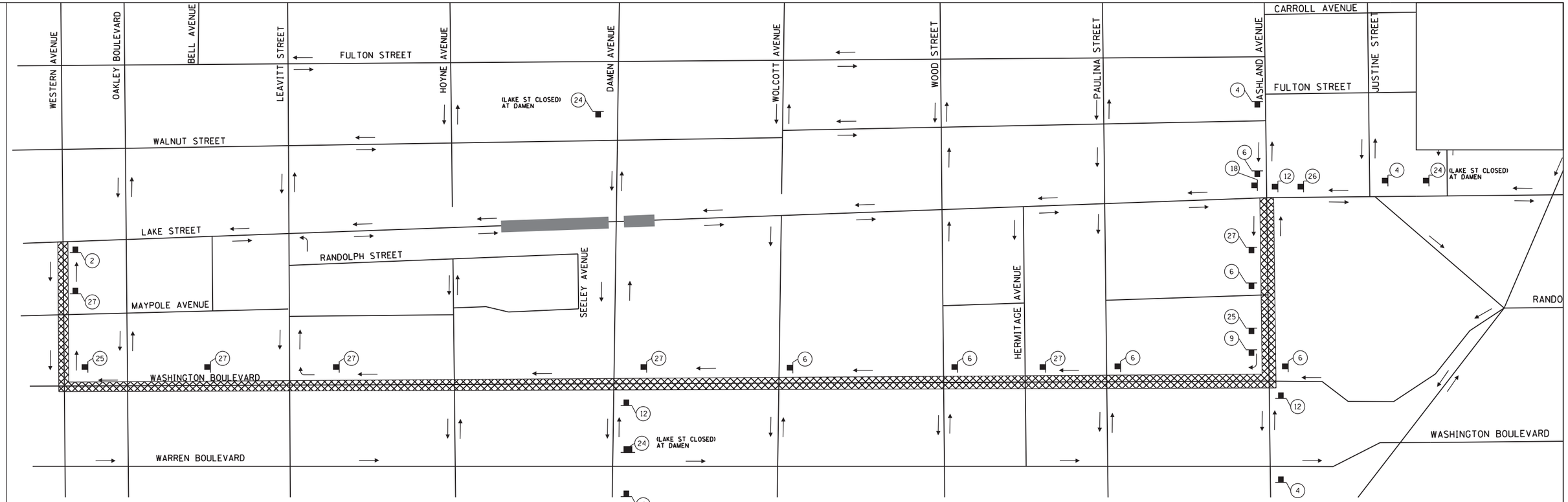

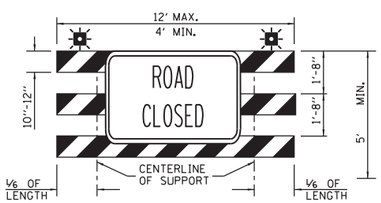

1 TYPE III BARRICADE (IDOT HWY STD 702001) R11-2 (48" x 30")

2 M4-8B (O) 24" X 18"

3 W20-2 (O) 48" X 48" W17-1101 (O) 24" X 12"

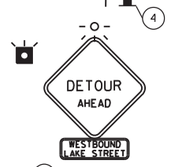

4 W20-2 (O) 48" X 48" W17-1101 (O) 24" X 12"

5 M4-9 (O) 30" X 24" W17-1101 (O) 24" X 12"

6 M4-9 (O) 30" X 24" W17-1101 (O) 24" X 12"

7 M4-9 (O) 30" X 24" W17-1101 (O) 24" X 12"

8 M4-9R (O) 30" X 24" W17-1101 (O) 24" X 12"

9 M4-9R (O) 30" X 24" W17-1101 (O) 24" X 12"

THIS DETOUR WILL BE USED IN CONJUNCTION WITH THE EASTBOUND DETOUR SHOWN ON SHEET C30-03. IT WILL BE USED ONLY WHEN A FULL CLOSURE OF LAKE STREET EAST OF DAMEN IS NECESSARY, AT THE DIRECTION OF THE COMMISSIONER.

LEGEND

- SIGN ON PORTABLE OR PERMANENT SUPPORT
- (1) SIGN NUMBER
- TRAFFIC FLOW
- FLASHING LIGHT
- DETOUR ROUTE
- CONSTRUCTION WORK ZONE

10 M4-9R (O) 30" X 24" W17-1101 (O) 24" X 12"

11 M4-9L (O) 30" X 24" W17-1101 (O) 24" X 12"

12 M4-9L (O) 30" X 24" W17-1101 (O) 24" X 12"

13 M4-9L (O) 30" X 24" W17-1101 (O) 24" X 12"

14 R6-2R 18" X 24"

15 R6-2L 18" X 24"

16 R3-1 24" X 24"

17 R3-2 24" X 24"

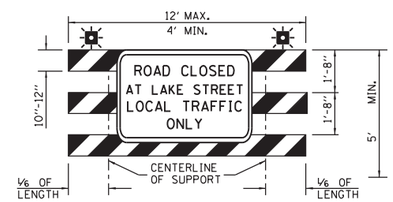

18 TYPE III BARRICADE (IDOT HWY STD 702001) R11-2 (48" x 30")

19 W20-3 (O) 48" X 48"

25 M4-9CR (O) 30" X 24" W17-1101 (O) 24" X 12"

26 M4-9CL (O) 30" X 24" W17-1101 (O) 24" X 12"

27 M4-9CR (O) 30" X 24" W17-1101 (O) 24" X 12"

20 NORTHBOUND WOLCOTT AVE 24" X 12"

21 SOUTHBOUND WOOD ST 24" X 12"

22 NORTHBOUND HERMITAGE AVE 24" X 12"

23 NORTHBOUND PAULINA ST 24" X 12"

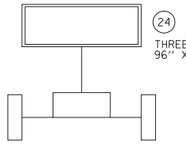

24 THREE LINE VARIABLE MESSAGE BOARD 96" X 55"

* USE SIGNS 20-23 AS APPLICABLE FOR CROSS-STREET DETOUR ROUTES.

DESIGN BY:	YA		01/27/2020	ISSUE FOR BID	YA	YMD	EJL		
DRAWN BY:	ML		10/04/2019	ISSUE FOR OUC EFP	CJB	YMD	EJL		
CHECKED BY:	EJL		06/14/2019	ISSUE FOR 100% DESIGN	LAB	YMD	EJL		
APPROVED BY:	EJL		06/14/2019	ISSUE FOR PERMIT	LAB	YMD	EJL		
CDOT/APPROVED BY:		NO.	DATE	REVISIONS	DES.	DRW.	CHK.	DCCO	CDOT

MILHOUSE
333 South Wabash Avenue
Suite 2901
Chicago, IL 60604
t 312.994.8701
f 312.987.0071
www.milhouseinc.com

PERKINS+WILL
The Wrigley Building
410 North Michigan Ave.
Suite 1600
Chicago, IL 60611
t 312.755.0770
f 312.755.0775
www.perkinswill.com

CDOT
CHICAGO DEPARTMENT OF TRANSPORTATION
DIVISION OF ENGINEERING

154 N DAMEN AVE - DAMEN GREEN LINE STATION

MAINTENANCE OF TRAFFIC - DETOUR 1- STAGE 1 & 2
WB LAKE ST.

CDOT PROJECT D-7-135 | DATE: 01/27/2020

SPEC. NO.

DRAWING NO. C30-02

REVISION NO.

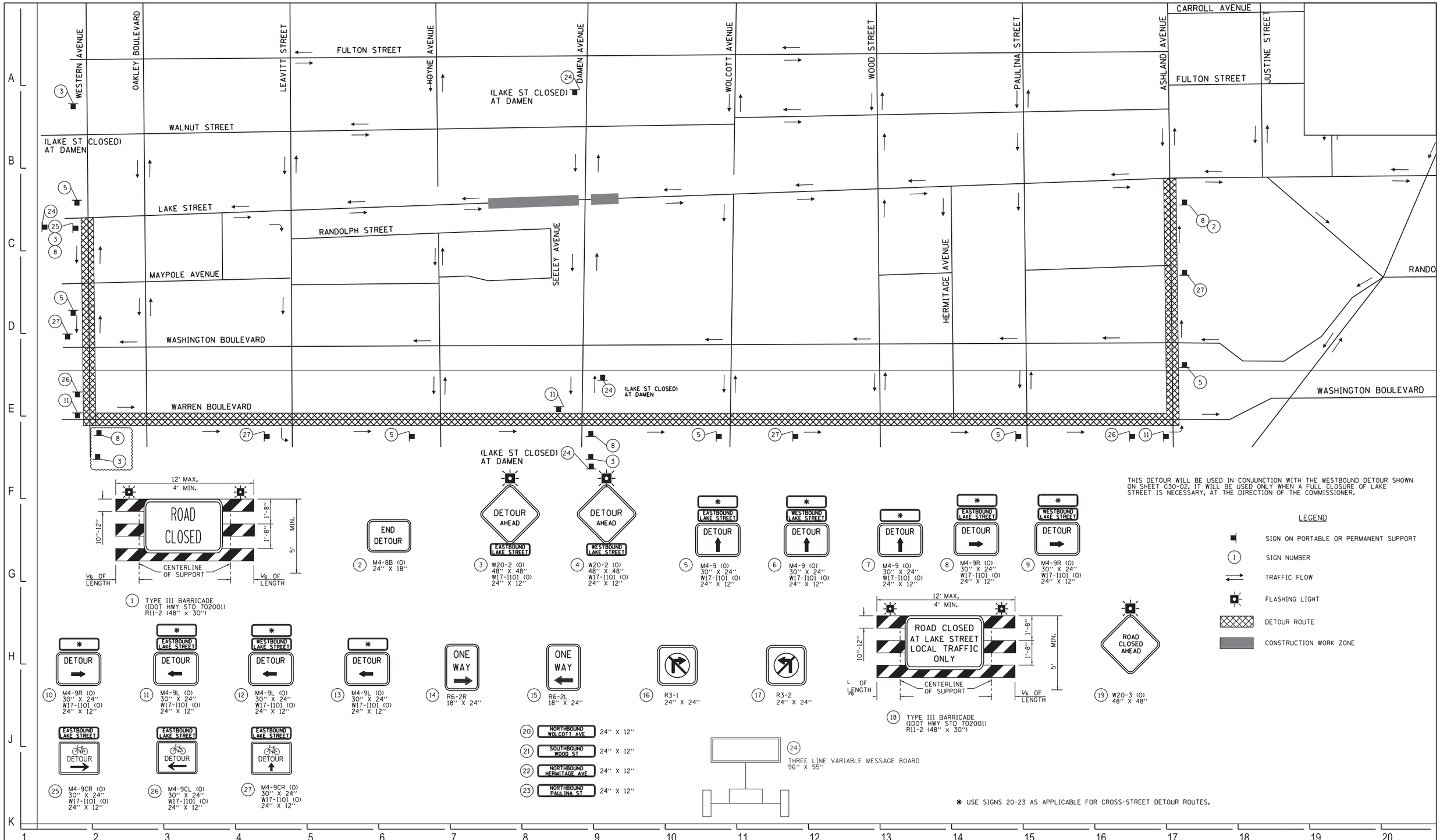

DESIGN BY:	YA		01/27/2020	ISSUE FOR BID	YA	YMD	EJL		
DRAWN BY:	ML		10/04/2019	ISSUE FOR OUC EFP	CJB	YMD	EJL		
CHECKED BY:	EJL		06/14/2019	ISSUE FOR 100% DESIGN	LAB	YMD	EJL		
APPROVED BY:	EJL		06/14/2019	ISSUE FOR PERMIT	LAB	YMD	EJL		
CDOT/APPROVED BY:		NO.	DATE	REVISIONS	DES.	DRW.	CHK.	DCCO	CDOT

MILHOUSE
333 South Wabash Avenue
Suite 2901
Chicago, IL 60604
t 312.994.8701
f 312.987.0071
www.milhouseinc.com

PERKINS+WILL
The Wrigley Building
410 North Michigan Ave.
Suite 1600
Chicago, IL 60611
t 312.755.0770
f 312.755.0775
www.perkinswill.com

CDOT
CHICAGO DEPARTMENT OF TRANSPORTATION
DIVISION OF ENGINEERING

154 N DAMEN AVE - DAMEN GREEN LINE STATION

MAINTENANCE OF TRAFFIC - DETOUR 2 - STAGE 1
EB LAKE ST.

CDOT PROJECT D-7-135 | DATE: 01/27/2020

SPEC. NO.

DRAWING NO. C30-03

REVISION NO.

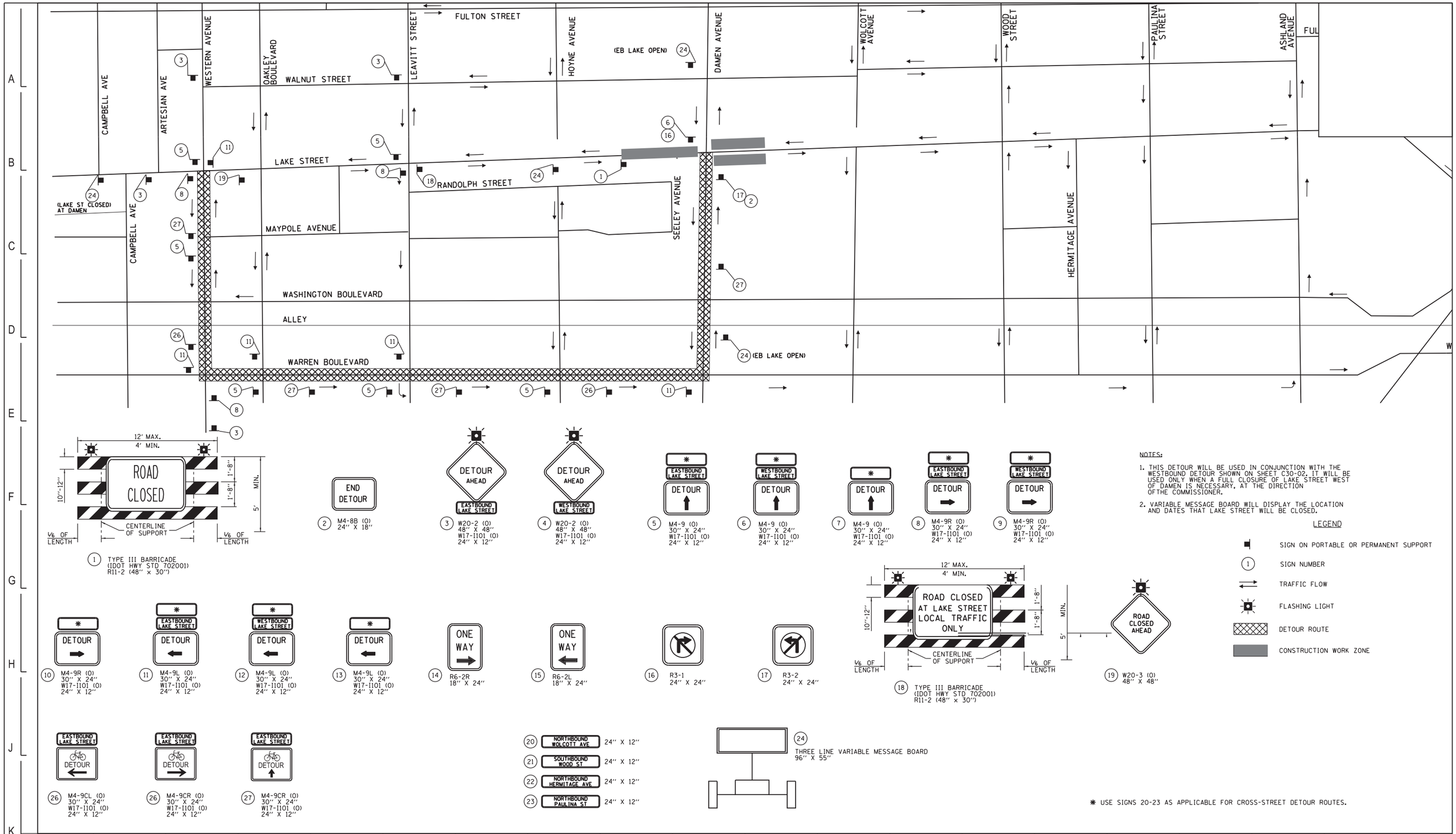

DESIGN BY:	YA		01/27/2020	ISSUE FOR BID	YA	YMD	EJL		
DRAWN BY:	ML		10/04/2019	ISSUE FOR OUC EFP	CJB	YMD	EJL		
CHECKED BY:	EJL		06/14/2019	ISSUE FOR 100% DESIGN	LAB	YMD	EJL		
APPROVED BY:	EJL		06/14/2019	ISSUE FOR PERMIT	LAB	YMD	EJL		
CDOT/APPROVED BY:		NO.	DATE	REVISIONS	DES.	DRW.	CHK.	DCCO	CDOT

MILHOUSE
333 South Wabash Avenue
Suite 2901
Chicago, IL 60604
t 312.994.8701
f 312.987.0071
www.milhouseinc.com

PERKINS+WILL
The Wrigley Building
410 North Michigan Ave.
Suite 1600
Chicago, IL 60611
t 312.755.0770
f 312.755.0775
www.perkinswill.com

CDOT
CHICAGO DEPARTMENT OF TRANSPORTATION
DIVISION OF ENGINEERING

154 N DAMEN AVE - DAMEN GREEN LINE STATION

MAINTENANCE OF TRAFFIC - DETOUR 3 - STAGE 2
EB LAKE ST.

CDOT PROJECT D-7-135

DATE: 01/27/2020

SPEC. NO.

DRAWING NO.
C30-04

REVISION NO.

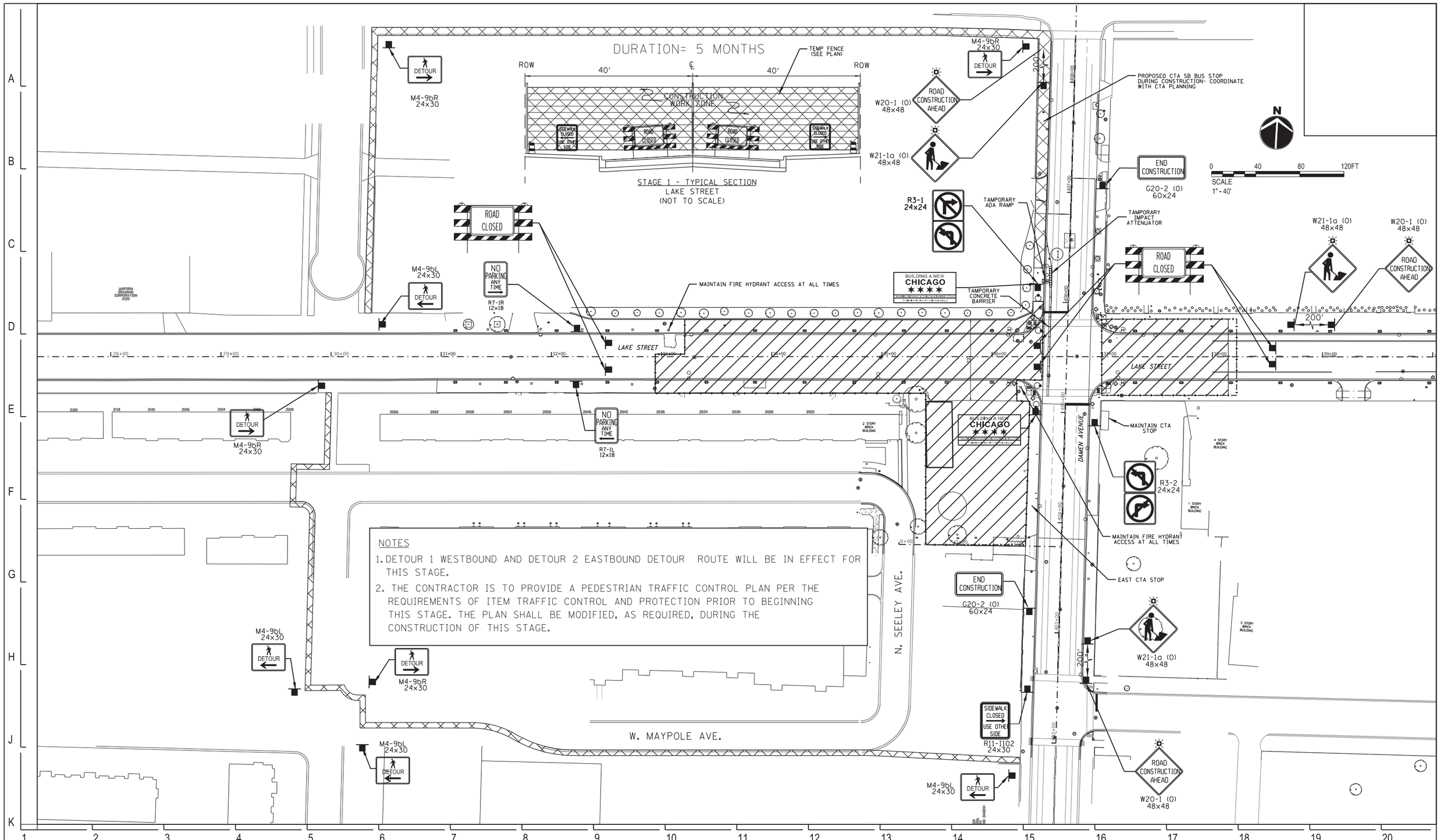

NOTES

1. DETOUR 1 WESTBOUND AND DETOUR 2 EASTBOUND DETOUR ROUTE WILL BE IN EFFECT FOR THIS STAGE.
2. THE CONTRACTOR IS TO PROVIDE A PEDESTRIAN TRAFFIC CONTROL PLAN PER THE REQUIREMENTS OF ITEM TRAFFIC CONTROL AND PROTECTION PRIOR TO BEGINNING THIS STAGE. THE PLAN SHALL BE MODIFIED, AS REQUIRED, DURING THE CONSTRUCTION OF THIS STAGE.

DESIGN BY:	YA		01/27/2020	ISSUE FOR BID	YA	YMD	EJL		
DRAWN BY:	ML		10/04/2019	ISSUE FOR OUC EFP	CJB	YMD	EJL		
CHECKED BY:	EJL		06/14/2019	ISSUE FOR 100% DESIGN	LAB	YMD	EJL		
APPROVED BY:	EJL		06/14/2019	ISSUE FOR PERMIT	LAB	YMD	EJL		
CDOT/APPROVED BY:		NO.	DATE	REVISIONS	DES.	DRW.	CHK.	DCCO	CDOT

MILHOUSE
333 South Wabash Avenue
Suite 2901
Chicago, IL 60604
t 312.994.8701
f 312.987.0071
www.milhouseinc.com

PERKINS+WILL
The Wrigley Building
410 North Michigan Ave.
Suite 1600
Chicago, IL 60611
t 312.755.0770
f 312.755.0775
www.perkinswill.com

CDOT
CHICAGO DEPARTMENT OF TRANSPORTATION
DIVISION OF ENGINEERING

154 N DAMEN AVE - DAMEN GREEN LINE STATION

MAINTENANCE OF TRAFFIC - STAGE 1

CDOT PROJECT D-7-135

DATE: 01/27/2020

SPEC. NO.

DRAWING NO. C40-01

REVISION NO.

DURATION= 5 MONTHS

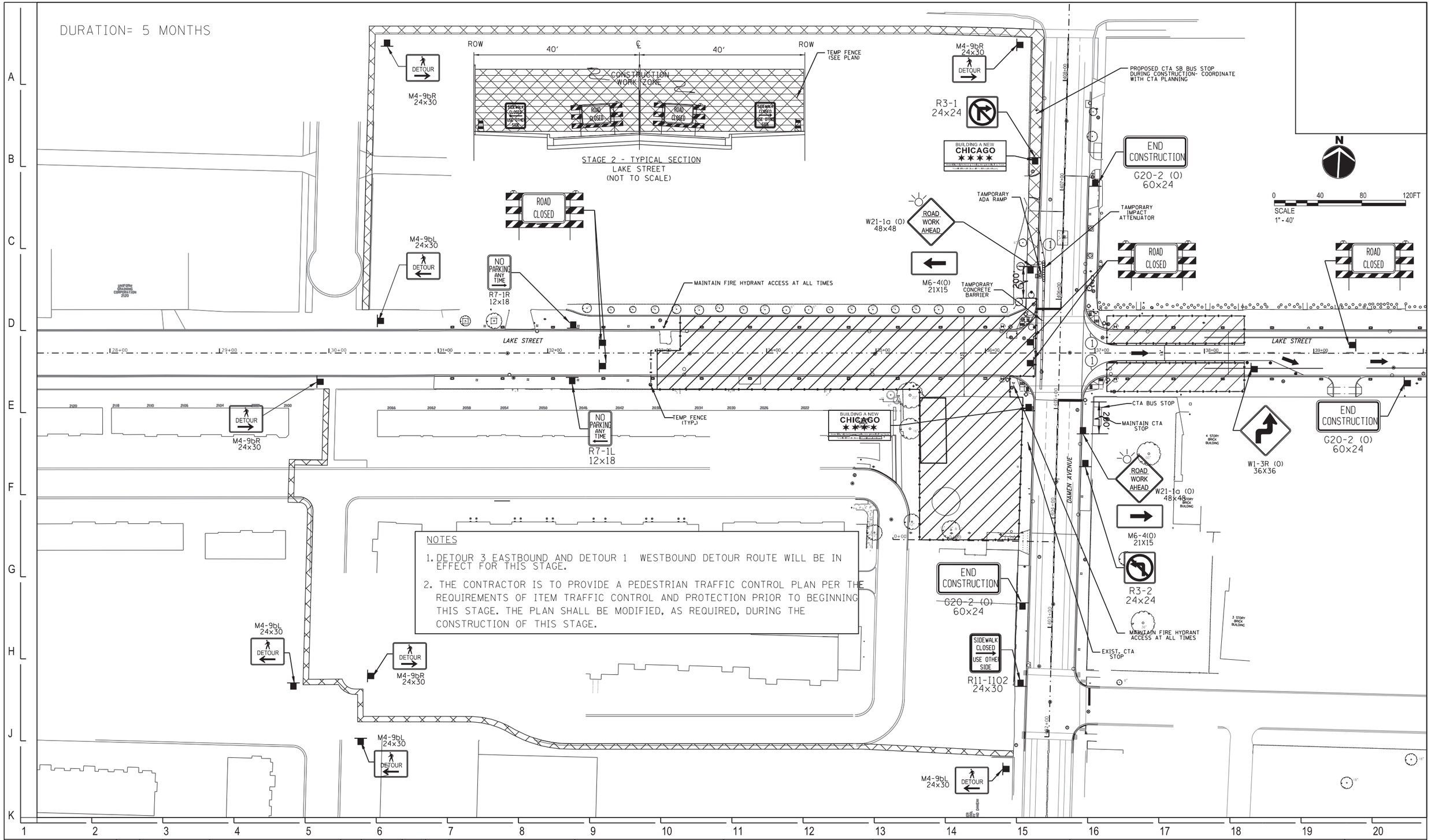

DESIGN BY:	YA		01/27/2020	ISSUE FOR BID	YA	YMD	EJL		
DRAWN BY:	ML		10/04/2019	ISSUE FOR OUC EFP	CJB	YMD	EJL		
CHECKED BY:	EJL		06/14/2019	ISSUE FOR 100% DESIGN	LAB	YMD	EJL		
APPROVED BY:	EJL		06/14/2019	ISSUE FOR PERMIT	LAB	YMD	EJL		
CDOT/APPROVED BY:		NO.	DATE	REVISIONS	DES.	DRW.	CHK.	DCCO	CDOT

MILHOUSE
333 South Wabash Avenue
Suite 2901
Chicago, IL 60604
t 312.994.8701
f 312.987.0071
www.milhouseinc.com

PERKINS+WILL
The Wrigley Building
410 North Michigan Ave.
Suite 1600
Chicago, IL 60611
t 312.755.0770
f 312.755.0775
www.perkinswill.com

CDOT
CHICAGO DEPARTMENT OF TRANSPORTATION
DIVISION OF ENGINEERING

154 N DAMEN AVE - DAMEN GREEN LINE STATION

MAINTENANCE OF TRAFFIC - STAGE 2

CDOT PROJECT D-7-135

DATE: 01/27/2020

SPEC. NO.

DRAWING NO. C40-02

REVISION NO.

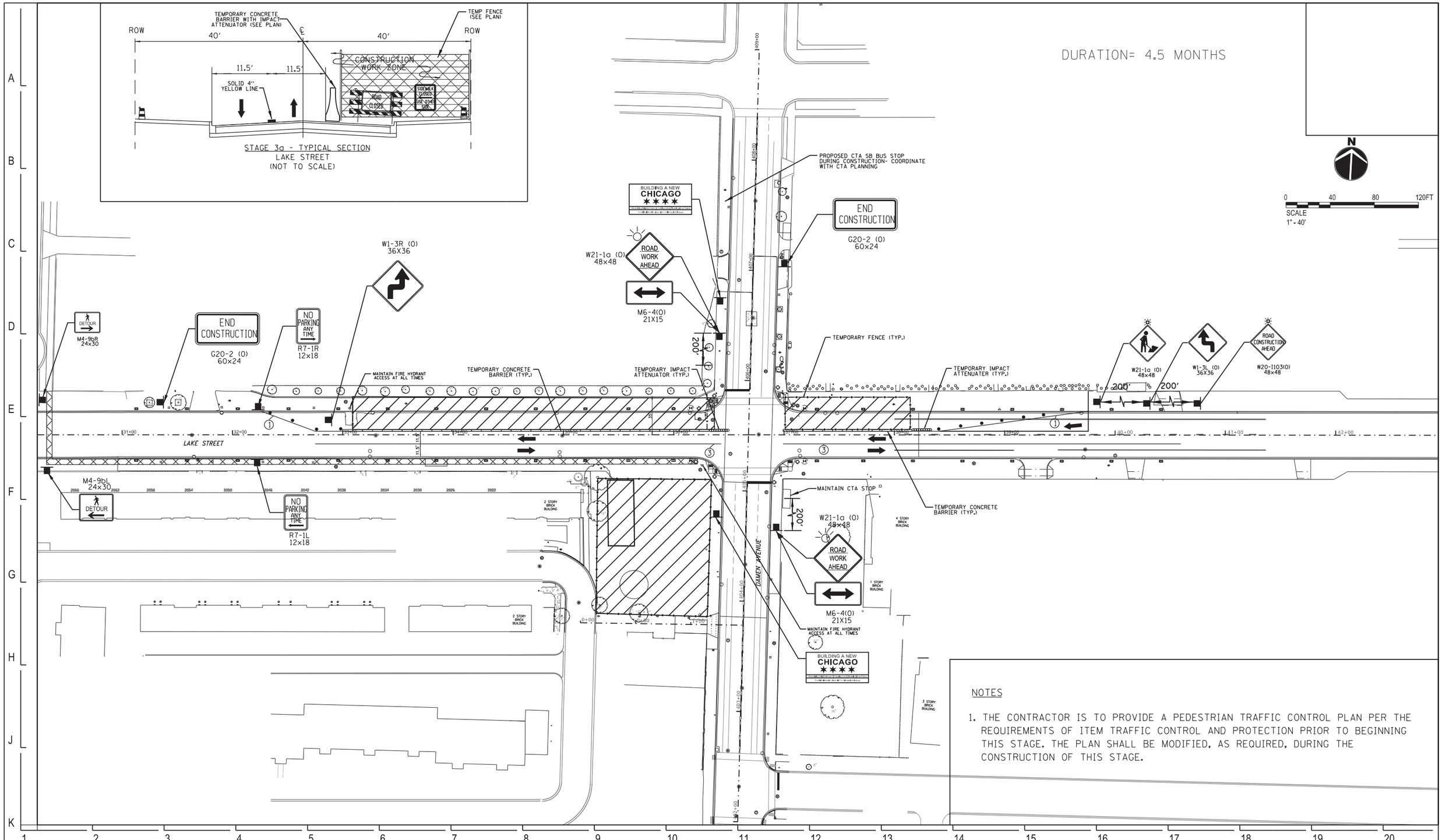

NOTES

1. THE CONTRACTOR IS TO PROVIDE A PEDESTRIAN TRAFFIC CONTROL PLAN PER THE REQUIREMENTS OF ITEM TRAFFIC CONTROL AND PROTECTION PRIOR TO BEGINNING THIS STAGE. THE PLAN SHALL BE MODIFIED, AS REQUIRED, DURING THE CONSTRUCTION OF THIS STAGE.

DESIGN BY:	YA		01/27/2020	ISSUE FOR BID	YA	YMD	EJL		
DRAWN BY:	ML		10/04/2019	ISSUE FOR OUC EFP	CJB	YMD	EJL		
CHECKED BY:	EJL		06/14/2019	ISSUE FOR 100% DESIGN	LAB	YMD	EJL		
APPROVED BY:	EJL		06/14/2019	ISSUE FOR PERMIT	LAB	YMD	EJL		
CDOT/APPROVED BY:		NO.	DATE	REVISIONS	DES.	DRW.	CHK.	DCCO	CDOT

MILHOUSE
333 South Wabash Avenue
Suite 2901
Chicago, IL 60604
t 312.994.8701
f 312.987.0071
www.milhouseinc.com

PERKINS+WILL
The Wrigley Building
410 North Michigan Ave.
Suite 1600
Chicago, IL 60611
t 312.755.0770
f 312.755.0775
www.perkinswill.com

CDOT
CHICAGO DEPARTMENT OF TRANSPORTATION
DIVISION OF ENGINEERING

154 N DAMEN AVE - DAMEN GREEN LINE STATION

MAINTENANCE OF TRAFFIC - STAGE 3A

CDOT PROJECT D-7-135

DATE: 01/27/2020

SPEC. NO.

DRAWING NO. C40-03

REVISION NO.

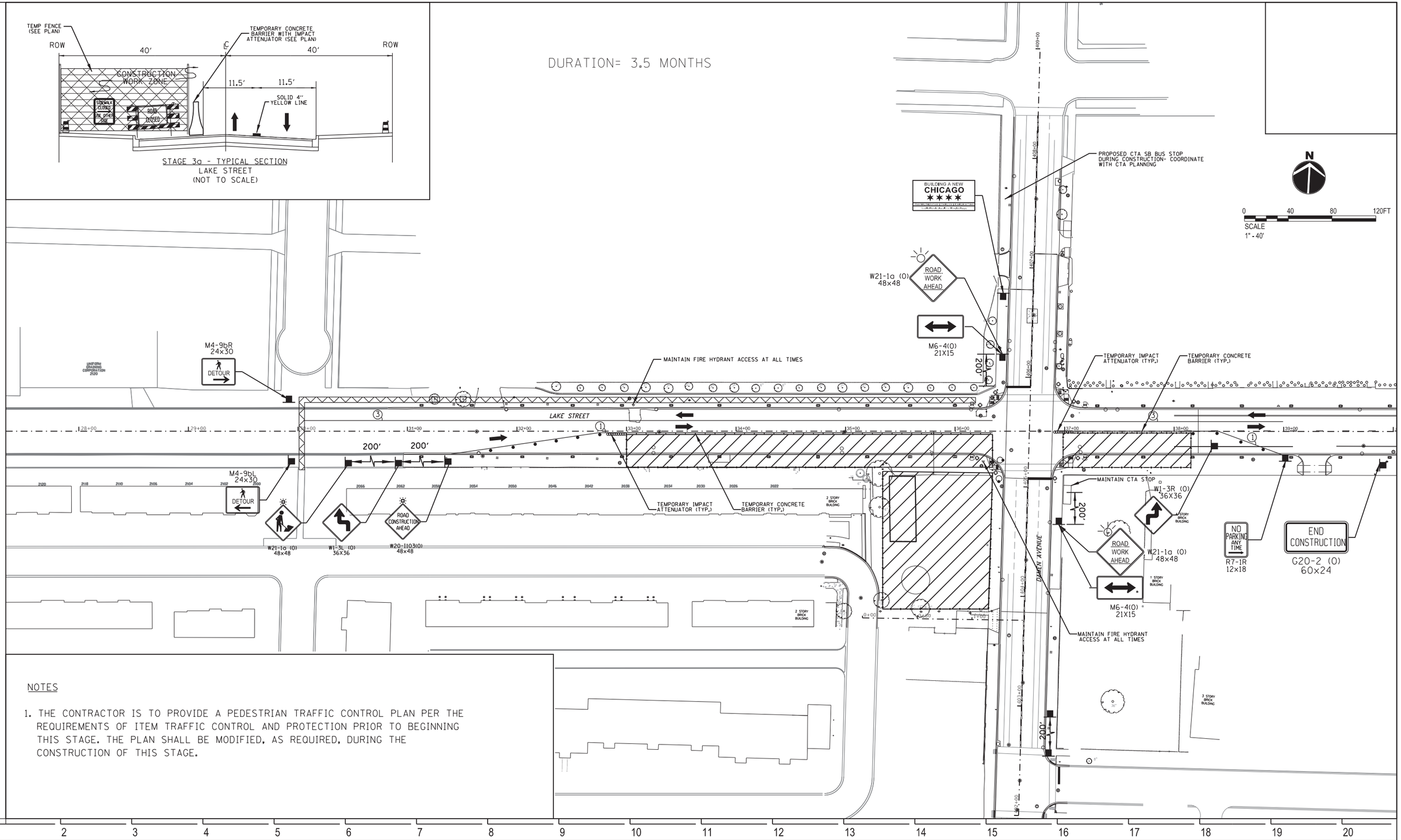

NOTES

1. THE CONTRACTOR IS TO PROVIDE A PEDESTRIAN TRAFFIC CONTROL PLAN PER THE REQUIREMENTS OF ITEM TRAFFIC CONTROL AND PROTECTION PRIOR TO BEGINNING THIS STAGE. THE PLAN SHALL BE MODIFIED, AS REQUIRED, DURING THE CONSTRUCTION OF THIS STAGE.

DESIGN BY:	YA		01/27/2020	ISSUE FOR BID	YA	YMD	EJL		
DRAWN BY:	ML		10/04/2019	ISSUE FOR OUC EFP	CJB	YMD	EJL		
CHECKED BY:	EJL		06/14/2019	ISSUE FOR 100% DESIGN	LAB	YMD	EJL		
APPROVED BY:	EJL		06/14/2019	ISSUE FOR PERMIT	LAB	YMD	EJL		
CDOT/APPROVED BY:		NO.	DATE	REVISIONS	DES.	DRW.	CHK.	DCCO	CDOT

MILHOUSE
333 South Wabash Avenue
Suite 2901
Chicago, IL 60604
t 312.994.8701
f 312.987.0071
www.milhouseinc.com

PERKINS+WILL
The Wrigley Building
410 North Michigan Ave.
Suite 1600
Chicago, IL 60611
t 312.755.0770
f 312.755.0775
www.perkinswill.com

CDOT
CHICAGO DEPARTMENT OF TRANSPORTATION
DIVISION OF ENGINEERING

154 N DAMEN AVE - DAMEN GREEN LINE STATION

MAINTENANCE OF TRAFFIC - STAGE 3B

CDOT PROJECT D-7-135

DATE: 01/27/2020

SPEC. NO.

DRAWING NO. C40-04

REVISION NO.

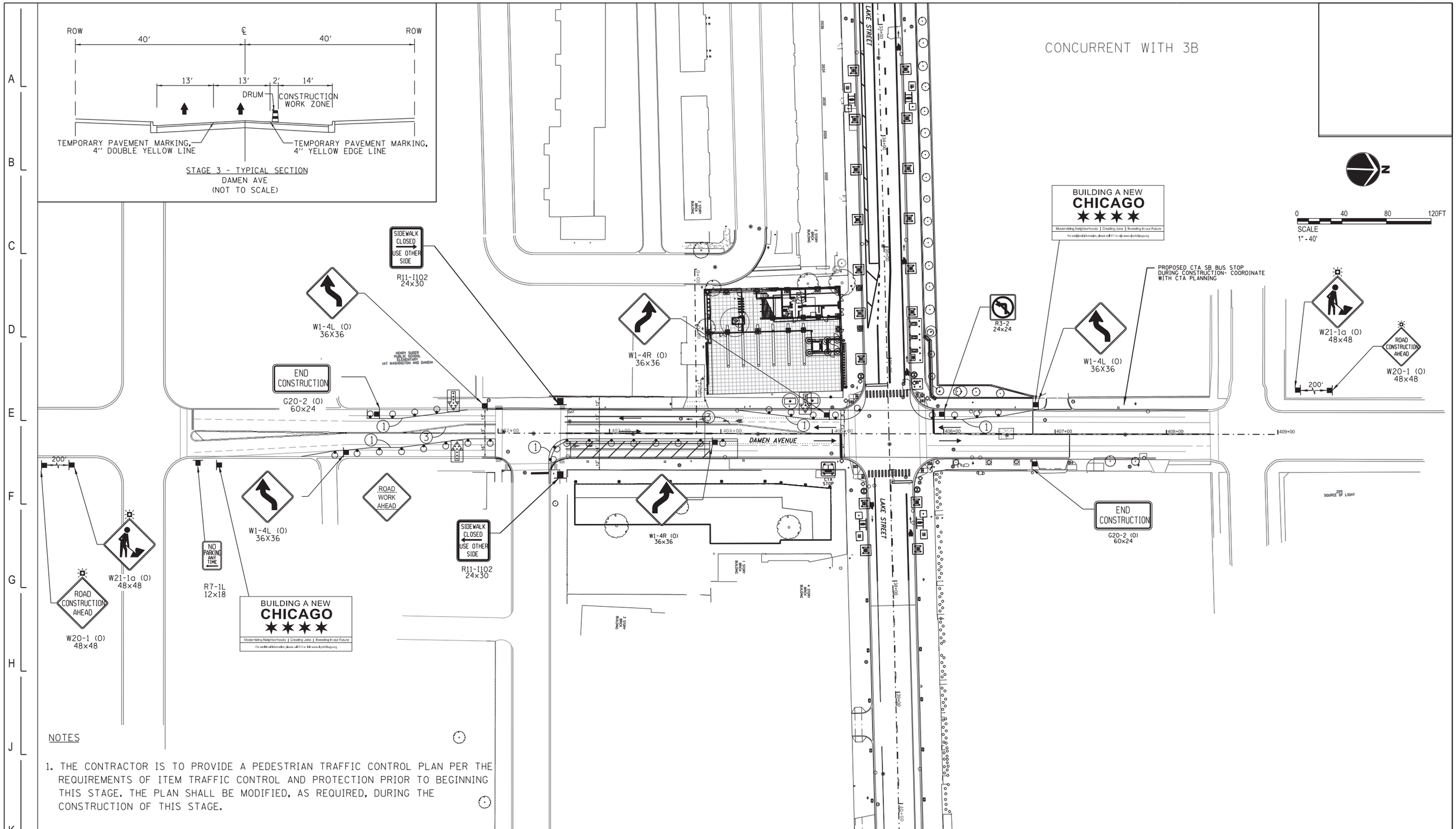

NOTES

1. THE CONTRACTOR IS TO PROVIDE A PEDESTRIAN TRAFFIC CONTROL PLAN PER THE REQUIREMENTS OF ITEM TRAFFIC CONTROL AND PROTECTION PRIOR TO BEGINNING THIS STAGE. THE PLAN SHALL BE MODIFIED, AS REQUIRED, DURING THE CONSTRUCTION OF THIS STAGE.

DESIGN BY:	YA		01/27/2020	ISSUE FOR BID	YA	YMD	EJL		
DRAWN BY:	ML		10/04/2019	ISSUE FOR OUC EFP	CJB	YMD	EJL		
CHECKED BY:	EJL		06/14/2019	ISSUE FOR 100% DESIGN	LAB	YMD	EJL		
APPROVED BY:	EJL		06/14/2019	ISSUE FOR PERMIT	LAB	YMD	EJL		
CDOT/APPROVED BY:		NO.	DATE	REVISIONS	DES.	DRW.	CHK.	DCCO	CDOT

MILHOUSE
333 South Wabash Avenue
Suite 2901
Chicago, IL 60604
t 312.994.8701
f 312.987.0071
www.milhouseinc.com

PERKINS+WILL
The Wrigley Building
410 North Michigan Ave.
Suite 1600
Chicago, IL 60611
t 312.755.0770
f 312.755.0775
www.perkinswill.com

CDOT
CHICAGO DEPARTMENT OF TRANSPORTATION
DIVISION OF ENGINEERING

154 N DAMEN AVE - DAMEN GREEN LINE STATION

MAINTENANCE OF TRAFFIC - STAGE 4A

CDOT PROJECT D-7-135 | DATE: 01/27/2020

SPEC. NO.

DRAWING NO. C40-05

REVISION NO.

STAGE 4 - TYPICAL SECTION
DAMEN AVE
(NOT TO SCALE)

CONCURRENT WITH 3B

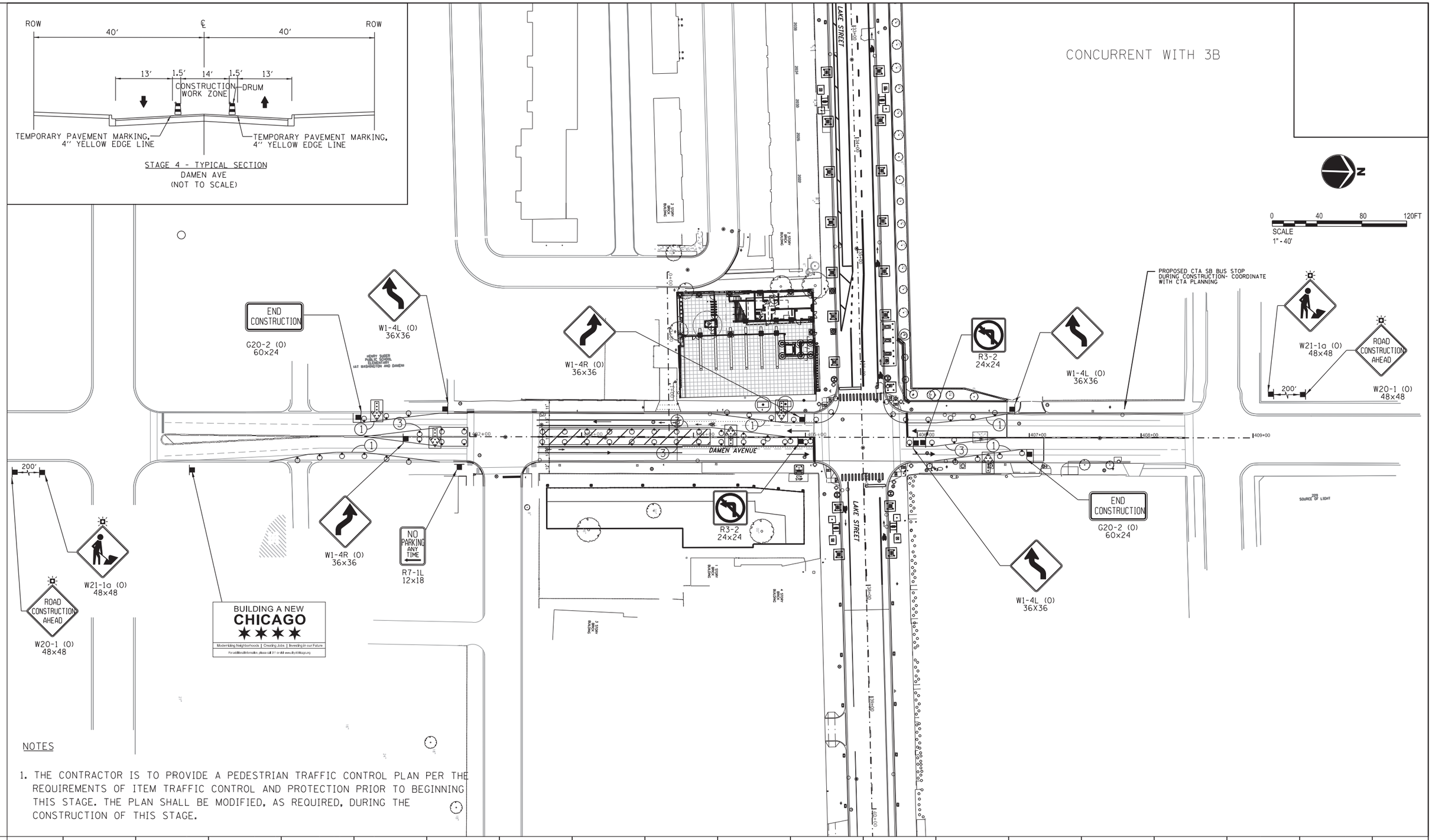

NOTES

1. THE CONTRACTOR IS TO PROVIDE A PEDESTRIAN TRAFFIC CONTROL PLAN PER THE REQUIREMENTS OF ITEM TRAFFIC CONTROL AND PROTECTION PRIOR TO BEGINNING THIS STAGE. THE PLAN SHALL BE MODIFIED, AS REQUIRED, DURING THE CONSTRUCTION OF THIS STAGE.

DESIGN BY:	YA		01/27/2020	ISSUE FOR BID	YA	YMD	EJL		
DRAWN BY:	ML		10/04/2019	ISSUE FOR OUC EFP	CJB	YMD	EJL		
CHECKED BY:	EJL								
APPROVED BY:	EJL								
CDOT/APPROVED BY:		NO.	DATE	REVISIONS	DES.	DRW.	CHK.	DCCO	CDOT

MILHOUSE
333 South Wabash Avenue
Suite 2901
Chicago, IL 60604
t 312.994.8701
f 312.987.0071
www.milhouseinc.com

PERKINS+WILL
The Wrigley Building
410 North Michigan Ave.
Suite 1600
Chicago, IL 60611
t 312.755.0770
f 312.755.0775
www.perkinswill.com

CDOT
CHICAGO DEPARTMENT OF TRANSPORTATION
DIVISION OF ENGINEERING

154 N DAMEN AVE - DAMEN GREEN LINE STATION

MAINTENANCE OF TRAFFIC - STAGE 4B

CDOT PROJECT D-7-135

DATE: 01/27/2020

SPEC. NO.

DRAWING NO. C40-06

REVISION NO.

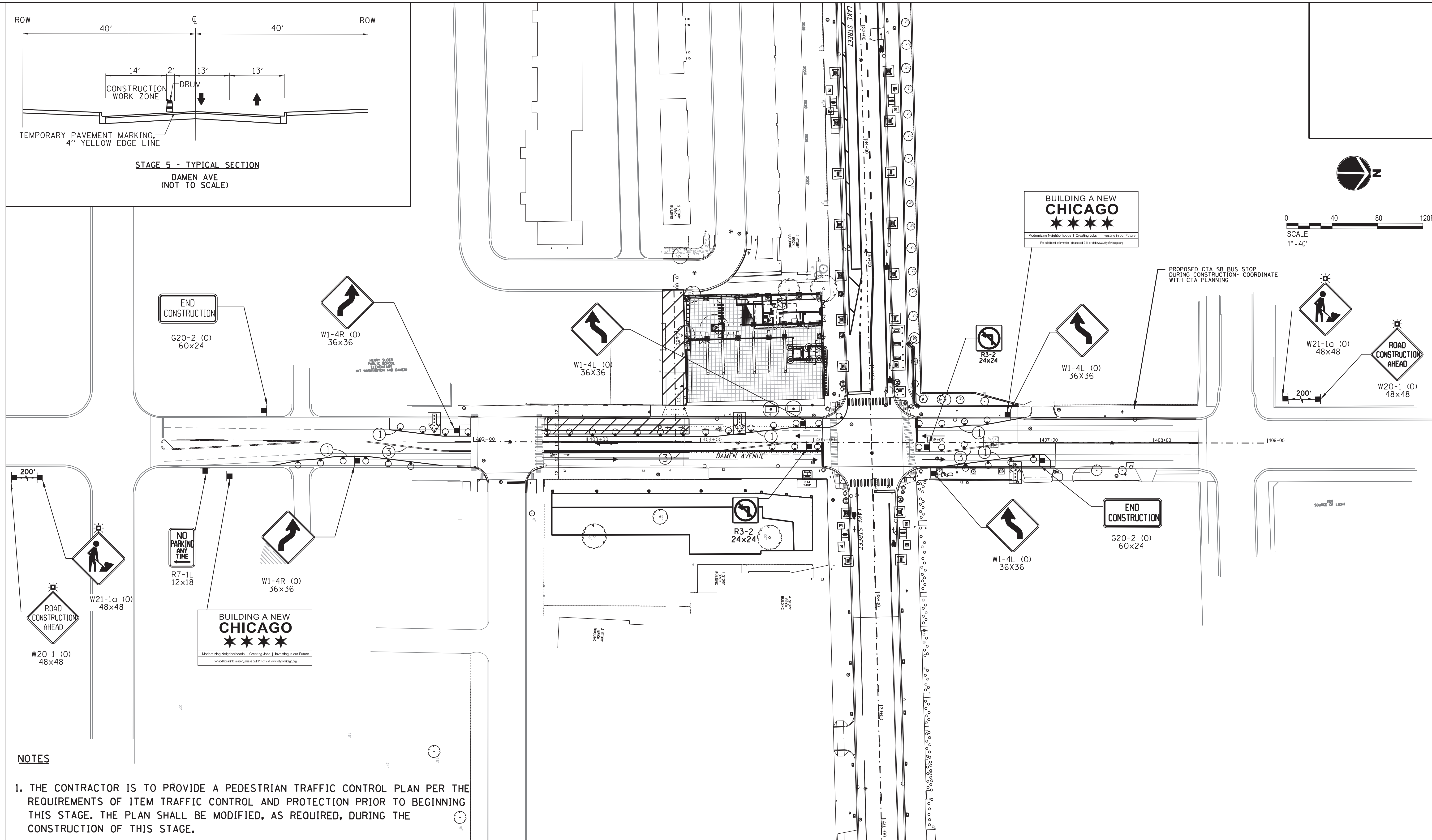

NOTES

1. THE CONTRACTOR IS TO PROVIDE A PEDESTRIAN TRAFFIC CONTROL PLAN PER THE REQUIREMENTS OF ITEM TRAFFIC CONTROL AND PROTECTION PRIOR TO BEGINNING THIS STAGE. THE PLAN SHALL BE MODIFIED, AS REQUIRED, DURING THE CONSTRUCTION OF THIS STAGE.

DESIGN BY:	YA		01/27/2020	ISSUE FOR BID	YA	YMD	EJL			
DRAWN BY:	ML		10/04/2019	ISSUE FOR OUC EFP	CJB	YMD	EJL			
CHECKED BY:	EJL									
APPROVED BY:	EJL									
CDOT/APPROVED BY:		NO.	DATE	REVISIONS	DES.	DRW.	CHK.	DCCO	CDOT	

MILHOUSE
333 South Wabash Avenue
Suite 2901
Chicago, IL 60604
t 312.994.8701
f 312.987.0071
www.milhouseinc.com

PERKINS+WILL
The Wrigley Building
410 North Michigan Ave.
Suite 1600
Chicago, IL 60611
t 312.755.0770
f 312.755.0775
www.perkinswill.com

CDOT
CHICAGO DEPARTMENT OF TRANSPORTATION
DIVISION OF ENGINEERING

154 N DAMEN AVE - DAMEN GREEN LINE STATION

MAINTENANCE OF TRAFFIC - STAGE 4C

CDOT PROJECT D-7-135

DATE: 01/27/2020

SPEC. NO.

DRAWING NO. C40-07

REVISION NO.

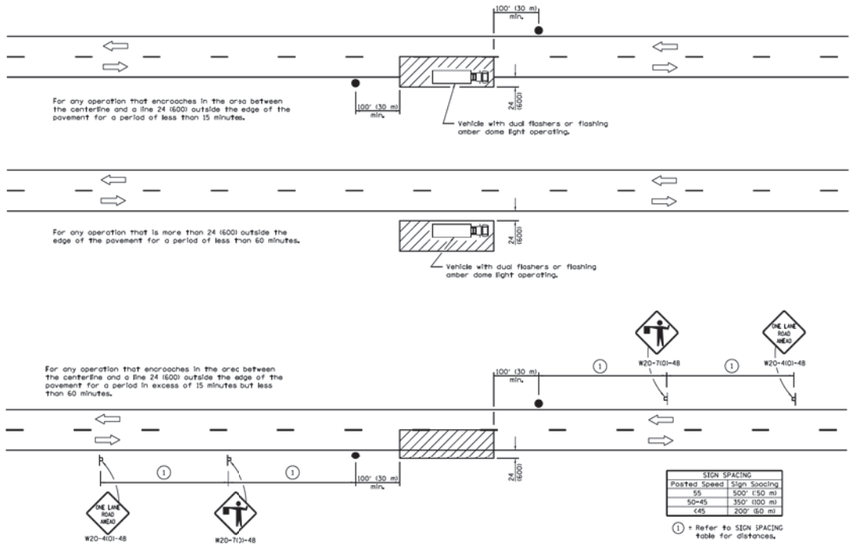

SIGN SPACING	
Posted Speed	Sign Spacing
55	500' (150 m)
50-45	350' (100 m)
<45	200' (60 m)

① = Refer to SIGN SPACING table for distances.

All dimensions are in inches (millimeters) unless otherwise shown.

TYPICAL APPLICATIONS
Marking patches
Field survey
String line
Utility operations
Cleaning up debris on pavement

SYMBOLS
Work area
Sign on portable or permanent support
Flagger with traffic control sign

Illinois Department of Transportation
APPROVED _____ JANUARY 1, 2011 — ENGINEER OF SAFETY ENGINEERING
APPROVED _____ JANUARY 1, 2011 — ENGINEER OF DESIGN AND ENVIRONMENT
ISSUED 1-1-11

DATE	REVISIONS
1-1-11	Revised flagger sign.
1-1-09	Switched units to
	English (metric).

LANE CLOSURE, 2L, 2W, SHORT TIME OPERATIONS

STANDARD 701301-04

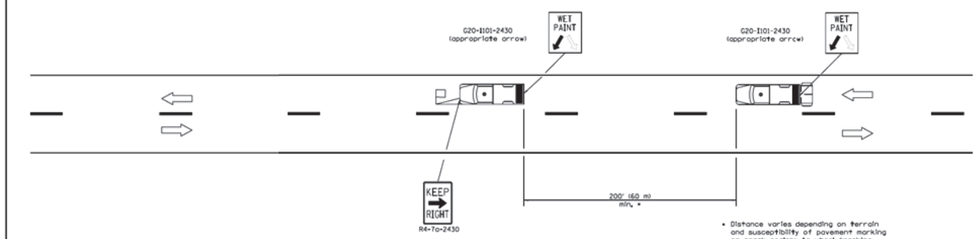

TYPICAL APPLICATIONS
Landscaping work
Utility work
Pavement marking
Weed spraying
Roadometer measurements
Debris cleanup
Crack pouring

SYMBOLS
Arrow board (Hazard Mode only)
Truck with headlights, emergency flashers and flashing amber light, (visible from all directions)
18x18 (450x450) min. orange flag (use when guide wheel is used)
Truck mounted attenuator

GENERAL NOTES
This Standard is used where any vehicle, equipment, workers or their activities will require a continuous moving operation where the average speed is greater than 3 mph (5 km/h).

For shoulder operations not encroaching on the pavement, use DETAIL A, Standard 701426.

All dimensions are in inches (millimeters) unless otherwise shown.

Illinois Department of Transportation
APPROVED _____ JANUARY 1, 2009 — ENGINEER OF OPERATIONS
APPROVED _____ JANUARY 1, 2009 — ENGINEER OF DESIGN AND ENVIRONMENT
ISSUED 1-1-09

DATE	REVISIONS
1-1-09	Switched units to
	English (metric). Omitted
	Pass With Care sign.
1-1-00	Elim. speed restrictions
	in Standard title.

LANE CLOSURE 2L, 2W MOVING OPERATIONS-- DAY ONLY

STANDARD 701311-03

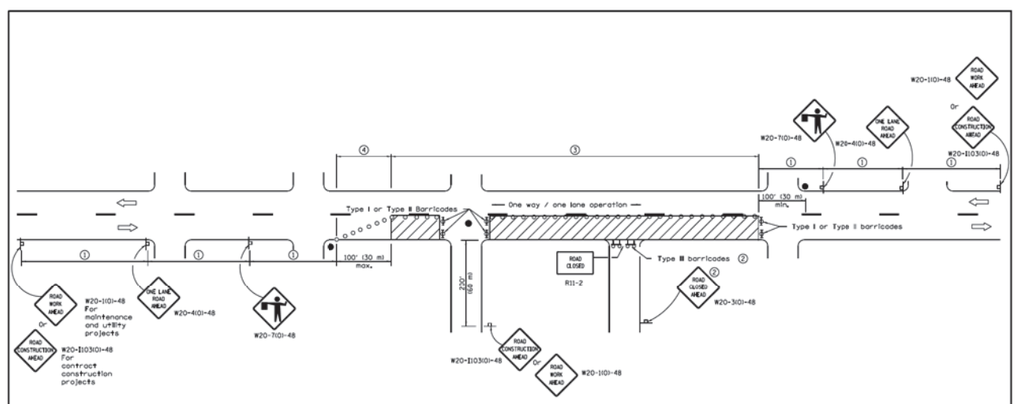

SIGN SPACING	
Posted Speed	Sign Spacing
55	500' (150 m)
50-45	350' (100 m)
<45	200' (60 m)

SYMBOLS
Work area
Cone, drum or barricade (not required for moving operations)
Sign on portable or permanent support
Flagger with traffic control sign
Barricade or drum with flashing light
Type III barricade with flashing lights

① Refer to SIGN SPACING TABLE for distances.
② For approved sideroad closures.
③ Cones at 25' (8 m) centers for 250' (75 m). Additional cones may be placed at 50' (15 m) centers. When drums or Type I or Type II barricades are used, the interval between devices may be doubled.
④ Cones, drums or barricades at 20' (6 m) centers.

GENERAL NOTES
This Standard is used where at any time, day or night, any vehicle, equipment, workers or their activities encroach or the pavement requiring the closure of one traffic lane in an urban area.

All dimensions are in inches (millimeters) unless otherwise shown.

Illinois Department of Transportation
APPROVED _____ JANUARY 1, 2011 — ENGINEER OF SAFETY ENGINEERING
APPROVED _____ JANUARY 1, 2011 — ENGINEER OF DESIGN AND ENVIRONMENT
ISSUED 1-1-11

DATE	REVISIONS
1-1-11	Revised flagger sign.
1-1-09	Switched units to
	English (metric).
	Corrected sign No.'s.

URBAN LANE CLOSURE, 2L, 2W, UNDIVIDED

STANDARD 701501-06

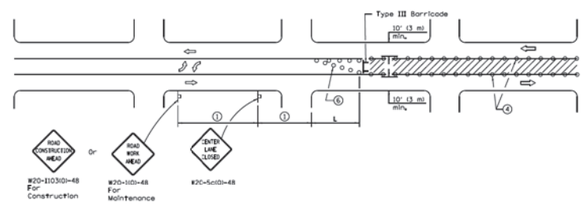

CASE I
(Signs required for both directions)

SIGN SPACING	
Posted Speed	Sign Spacing
55	500' (150 m)
50-45	350' (100 m)
<45	200' (60 m)

① Refer to SIGN SPACING TABLE for distances.
② Required for speeds > 40 mph (70 km/h).
③ Required if work exceeds 500' (164 m) or 1 block.
④ Cones at 25' (8 m) centers for 250' (75 m). Additional cones may be placed at 15 m (50') centers. When drums or Type I or II barricades are used, the interval between devices may be doubled.
⑤ For approved sideroad closures.
⑥ Cones, drums or barricades at 20' (6 m) centers in taper.
⑦ Use flagger sign only when flagger is present.

SYMBOLS
Work area
Barricade or drum with flashing light
Flagger with traffic control sign
Cone, drum or barricade (Cones for daytime use only)
Sign on portable or permanent support

GENERAL NOTES
This Standard is used to close one lane of an urban, two lane, two way roadway with a bidirectional turn lane.

Case I applies when no workers are present. When workers are present, two lanes shall be closed and traffic control shall be according to Standard 701501.

Calculate L as follows:

SPEED LIMIT	FORMULAS English	FORMULAS (Metric)
40 mph (70 km/h) or less	$L=\frac{WS^2}{60}$	$L=\frac{WS^2}{150}$
45 mph (80 km/h) or greater	L=(WXS)	L=0.65(WXS)

W = Width of offset in feet (meters).

S = Normal posted speed mph (km/h).

All dimensions are in inches (millimeters) unless otherwise shown.

Illinois Department of Transportation
APPROVED _____ JANUARY 1, 2014 — ENGINEER OF SAFETY ENGINEERING
APPROVED _____ JANUARY 1, 2014 — ENGINEER OF DESIGN AND ENVIRONMENT
ISSUED 1-1-14

DATE	REVISIONS
1-1-14	Omitted original note (4).
	Rev. workers sign no. to
	agree with current MUTCD.
1-1-13	Omitted text 'WORKERS'
	sign.

URBAN LANE CLOSURE, 2L, 2W, WITH BIDIRECTIONAL LEFT TURN LANE
(Sheet 1 of 2)

STANDARD 701502-06

DESIGN BY:	YA		01/27/2020	ISSUE FOR BID	YA	YMD	EJL		
DRAWN BY:	ML		10/04/2019	ISSUE FOR OUC EFP	CJB	YMD	EJL		
CHECKED BY:	EJL		06/14/2019	ISSUE FOR 100% DESIGN	LAB	YMD	EJL		
APPROVED BY:	EJL		06/14/2019	ISSUE FOR PERMIT	LAB	YMD	EJL		
CDOT/APPROVED BY:		NO.	DATE	REVISIONS	DES.	DRW.	CHK.	DCCO	CDOT

MILHOUSE
333 South Wabash Avenue
Suite 2901
Chicago, IL 60604
t 312.994.8701
f 312.987.0071
www.milhouseinc.com

PERKINS+WILL
The Wrigley Building
410 North Michigan Ave.
Suite 1600
Chicago, IL 60611
t 312.755.0770
f 312.755.0775
www.perkinswill.com

CDOT
CHICAGO DEPARTMENT OF TRANSPORTATION
DIVISION OF ENGINEERING

154 N DAMEN AVE - DAMEN GREEN LINE STATION

STAGING DETAILS

CDOT PROJECT D-7-135 | DATE: 01/27/2020

SPEC. NO.

DRAWING NO. C41-01

REVISION NO.

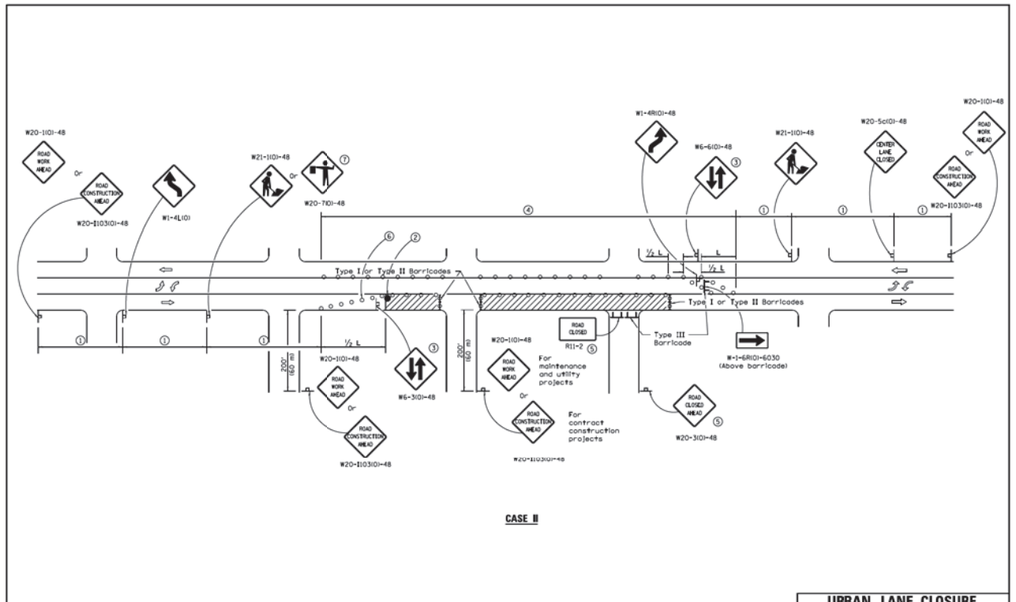

CASE II

Illinois Department of Transportation
APPROVED January 3, 2014
ENGINEER OF SAFETY ENGINEERING
APPROVED January 3, 2014
ENGINEER OF DESIGN AND ENVIRONMENT
BDG02 01-08

URBAN LANE CLOSURE, 2L, 2W, WITH BIDIRECTIONAL LEFT TURN LANE
(Sheet 2 of 2)

STANDARD 701502-06

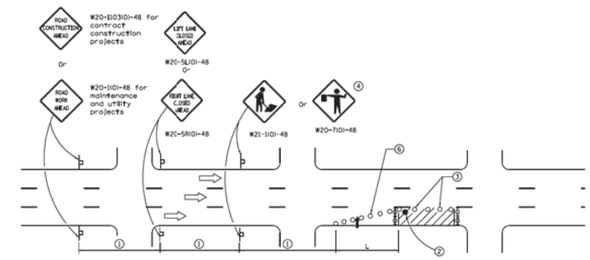

SIGN SPACING	
Posted Speed	Sign Spacing
55	500' (150 m)
50-45	350' (100 m)
≤45	200' (60 m)

SYMBOLS

- Arrow board
- Cone, drum or barricade
- Sign on portable or permanent support
- Work area
- Barricade or drum with flashing light
- Type III barricade with flashing lights
- Flagger with traffic control sign.

1. Refer to SIGN SPACING TABLE for distances.
2. Required for speeds > 40 MPH
3. Cones at 25' (8 m) centers for 250' (75 m). Additional cones may be placed at 50' (15 m) centers. When drums or Type I or Type II barricades are used, the interval between devices may be doubled.
4. Use flagger sign only when flagger is present.
5. For approved sidewalk closures.
6. Cones, drums or barricades at 20' (6 m) in taper.

GENERAL NOTES

This Standard is used where at any time, day or night, any vehicle, equipment, workers or their activities encroach on the pavement during shoulder operations or where construction requires lane closures in urban areas.

Calculate L as follows:

SPEED LIMIT	FORMULAS English	(Metric)
40 mph (70 km/h) or less	$L = \frac{WS^2}{60}$	$L = \frac{WS^2}{150}$
45 mph (80 km/h) or greater	L=(W)(S)	L=0.65(W)(S)

W = Width of offset in feet (meters).

S = Normal posted speed mph (km/h).

All dimensions are in inches (millimeters) unless otherwise shown.

Illinois Department of Transportation
APPROVED January 3, 2014
ENGINEER OF SAFETY ENGINEERING
APPROVED January 3, 2014
ENGINEER OF DESIGN AND ENVIRONMENT
BDG02 01-08

DATE	REVISIONS
1-1-14	Revised workers sign
	number to agree with
	current MUTCD.
1-1-13	Omitted text 'WORKERS'
	sign.

URBAN LANE CLOSURE, MULTILANE, 1W OR 2W WITH NONTRAVERSABLE MEDIAN
(Sheet 1 of 2)

STANDARD 701601-09

F SHAPE DESIGN

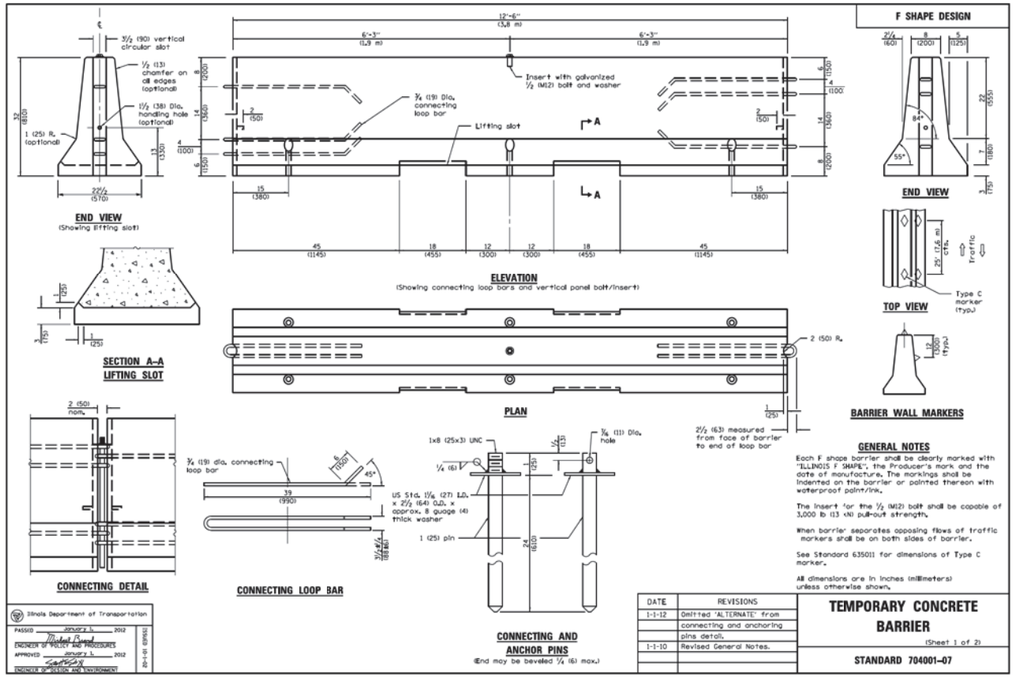

GENERAL NOTES

Each F shape barrier shall be clearly marked with "ILLINOIS F SHAPE", the Producer's mark and the date of manufacture. The markings shall be indented on the barrier or painted thereon with waterproof paint/ink.

The insert for the ½ (M12) bolt shall be capable of 3,000 lb (13 kN) pull-out strength.

When barrier separates opposing flows of traffic markers shall be on both sides of barrier.

See Standard 635011 for dimensions of Type C marker.

All dimensions are in inches (millimeters) unless otherwise shown.

Illinois Department of Transportation
APPROVED January 3, 2012
ENGINEER OF POLICY AND PROCEDURES
APPROVED January 3, 2012
ENGINEER OF DESIGN AND ENVIRONMENT
BDG02 01-08

DATE	REVISIONS
1-1-12	Omitted 'ALTERNATE' from
	connecting and anchoring
	pins detail.
1-1-10	Revised General Notes.

TEMPORARY CONCRETE BARRIER
(Sheet 1 of 2)

STANDARD 704001-07

F SHAPE DESIGN

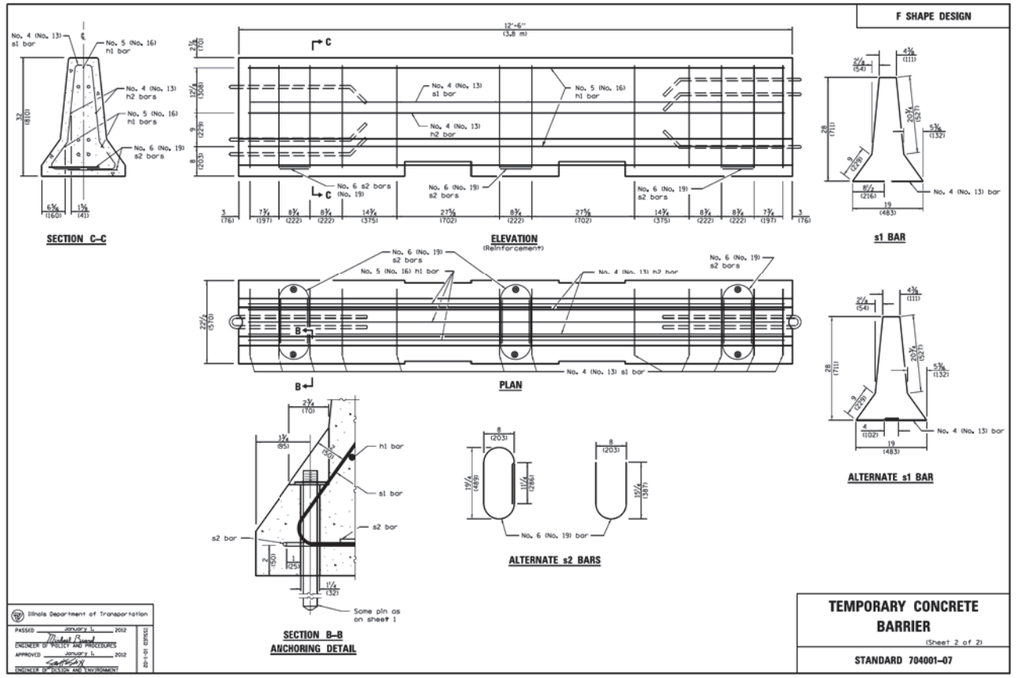

Illinois Department of Transportation
APPROVED January 3, 2012
ENGINEER OF POLICY AND PROCEDURES
APPROVED January 3, 2012
ENGINEER OF DESIGN AND ENVIRONMENT
BDG02 01-08

TEMPORARY CONCRETE BARRIER
(Sheet 2 of 2)

STANDARD 704001-07

DESIGN BY:	YA		01/27/2020	ISSUE FOR BID	YA	YMD	EJL		
DRAWN BY:	ML		10/04/2019	ISSUE FOR OUC EFP	CJB	YMD	EJL		
CHECKED BY:	EJL		06/14/2019	ISSUE FOR 100% DESIGN	LAB	YMD	EJL		
APPROVED BY:	EJL		06/14/2019	ISSUE FOR PERMIT	LAB	YMD	EJL		
CDOT/APPROVED BY:		NO.	DATE	REVISIONS	DES.	DRW.	CHK.	DCCO	CDOT

MILHOUSE
333 South Wabash Avenue
Suite 2901
Chicago, IL 60604
t 312.994.8701
f 312.987.0011
www.milhouseinc.com

PERKINS+WILL
The Wrigley Building
410 North Michigan Ave.
Suite 1600
Chicago, IL 60611
t 312.755.0770
f 312.755.0775
www.perkinswill.com

CDOT
CHICAGO DEPARTMENT OF TRANSPORTATION
DIVISION OF ENGINEERING

154 N DAMEN AVE - DAMEN GREEN LINE STATION

STAGING DETAILS

CDOT PROJECT D-7-135 | DATE: 01/27/2020

SPEC. NO.

DRAWING NO. C41-02

REVISION NO.

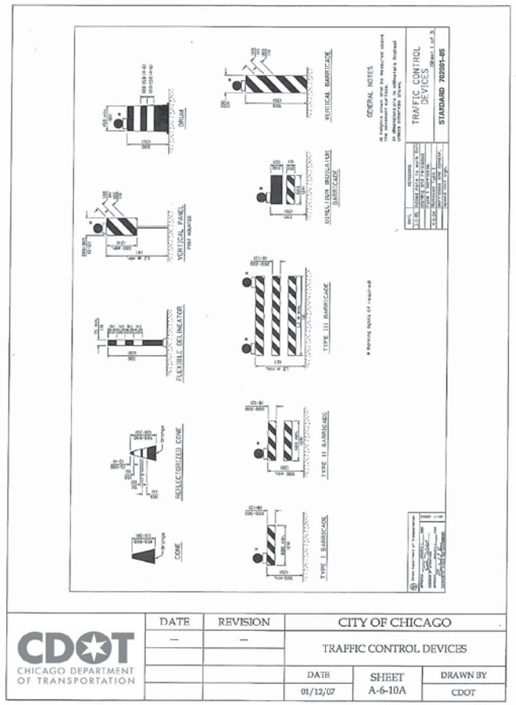

140

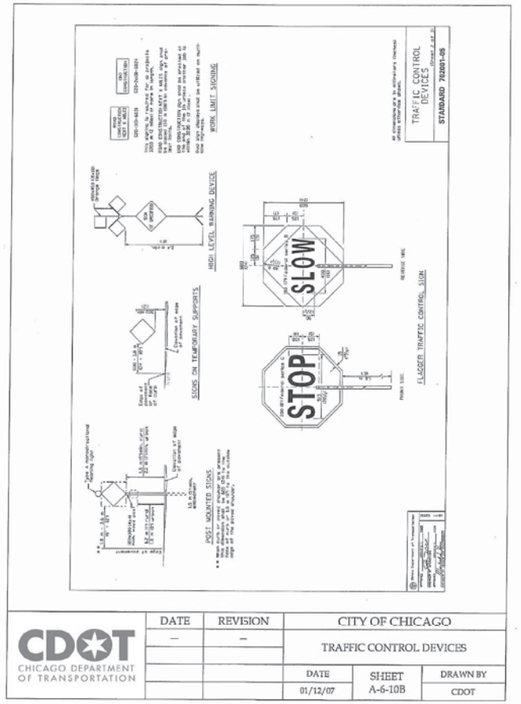

141

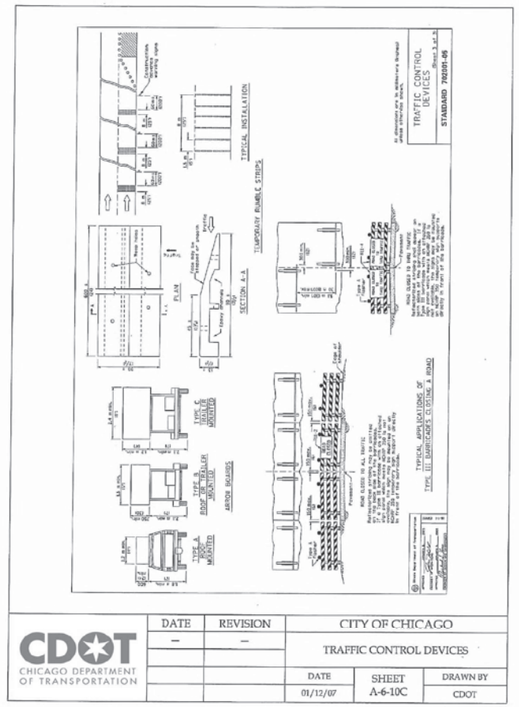

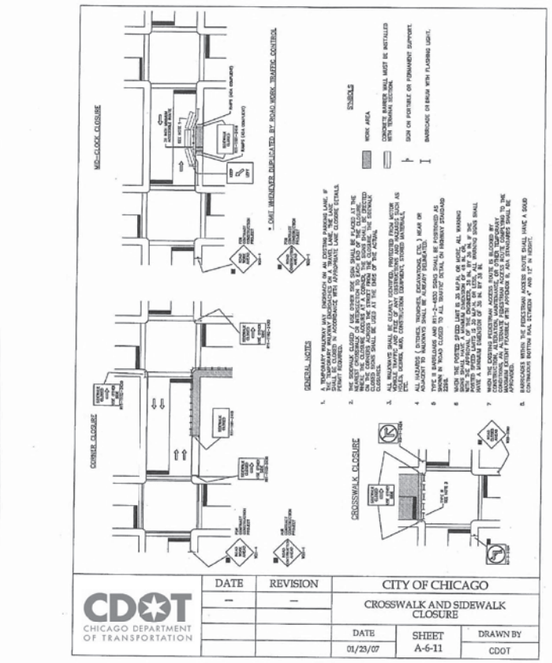

DESIGN BY:	YA		01/27/2020	ISSUE FOR BID	YA	YMD	EJL		
DRAWN BY:	ML		10/04/2019	ISSUE FOR OUC EFP	CJB	YMD	EJL		
CHECKED BY:	EJL		06/14/2019	ISSUE FOR 100% DESIGN	LAB	YMD	EJL		
APPROVED BY:	EJL		06/14/2019	ISSUE FOR PERMIT	LAB	YMD	EJL		
CDOT/APPROVED BY:		NO.	DATE	REVISIONS	DES.	DRW.	CHK.	DCCO	CDOT

MILHOUSE
333 South Wabash Avenue
Suite 2901
Chicago, IL 60604
t 312.994.8701
f 312.987.0071
www.milhouseinc.com

PERKINS+WILL
The Wrigley Building
410 North Michigan Ave.
Suite 1600
Chicago, IL 60611
t 312.755.0770
f 312.755.0775
www.perkinswill.com

CDOT
CHICAGO DEPARTMENT OF TRANSPORTATION
DIVISION OF ENGINEERING

154 N DAMEN AVE - DAMEN GREEN LINE STATION

STAGING DETAILS

CDOT PROJECT D-7-135

DATE: 01/27/2020

SPEC. NO.

DRAWING NO. C41-03

REVISION NO.

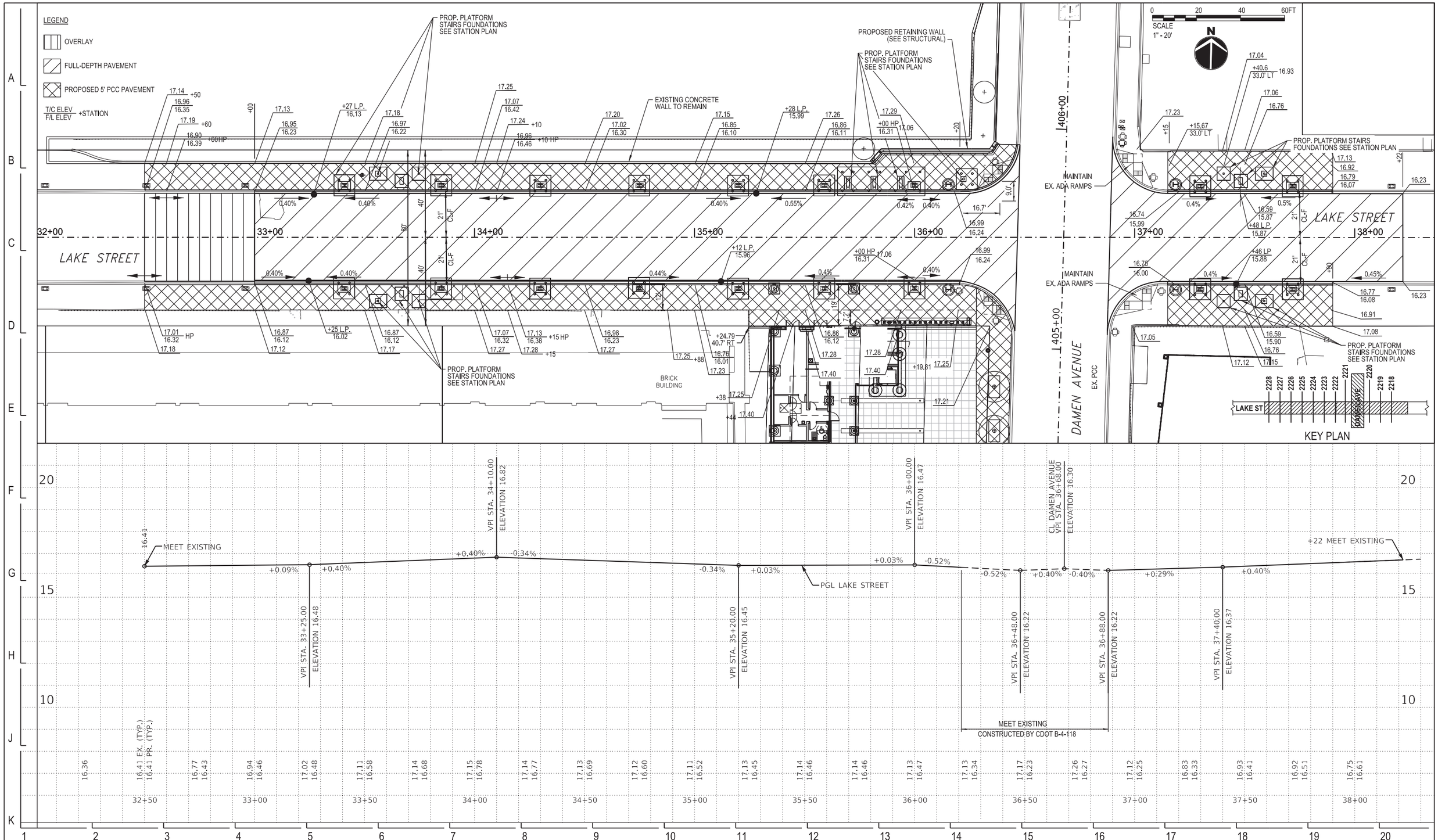

DESIGN BY:	YA		01/27/2020	ISSUE FOR BID	YA	YMD	EJL		
DRAWN BY:	ML		10/04/2019	ISSUE FOR OUC EFP	CJB	YMD	EJL		
CHECKED BY:	EJL		06/14/2019	ISSUE FOR 100% DESIGN	LAB	YMD	EJL		
APPROVED BY:	EJL		06/14/2019	ISSUE FOR PERMIT	LAB	YMD	EJL		
CDOT/APPROVED BY:		NO.	DATE	REVISIONS	DES.	DRW.	CHK.	DCCO	CDOT

MILHOUSE
333 South Wabash Avenue
Suite 2901
Chicago, IL 60604
t 312.994.8701
f 312.987.0071
www.milhouseinc.com

PERKINS+WILL
The Wrigley Building
410 North Michigan Ave.
Suite 1600
Chicago, IL 60611
t 312.755.0770
f 312.755.0775
www.perkinswill.com

CDOT
CHICAGO DEPARTMENT OF TRANSPORTATION
DIVISION OF ENGINEERING

154 N DAMEN AVE - DAMEN GREEN LINE STATION

PROPOSED IMPROVEMENTS

CDOT PROJECT D-7-135

DATE: 01/27/2020

SPEC. NO.

DRAWING NO. C50-01

REVISION NO.

LEGEND

OVERLAY

FULL-DEPTH PAVEMENT

PROPOSED 5" PCC SIDEWALK

T/C ELEV / F/L ELEV +STATION

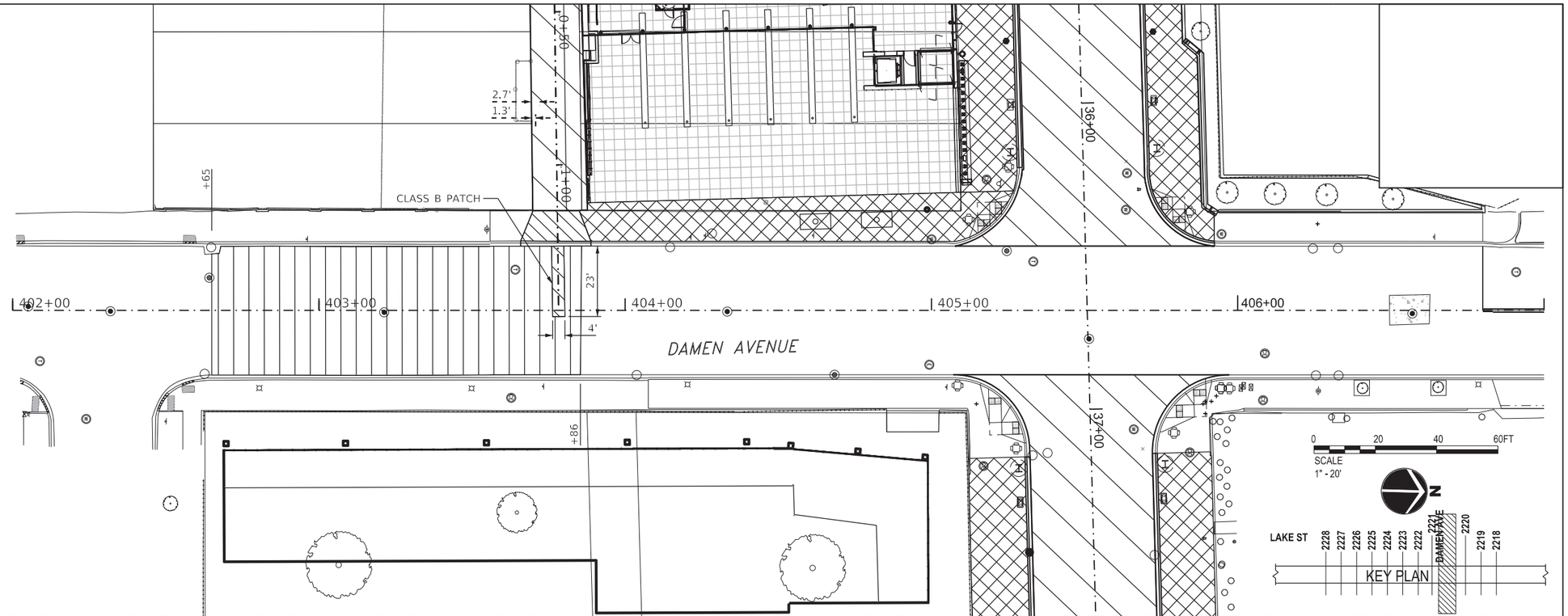

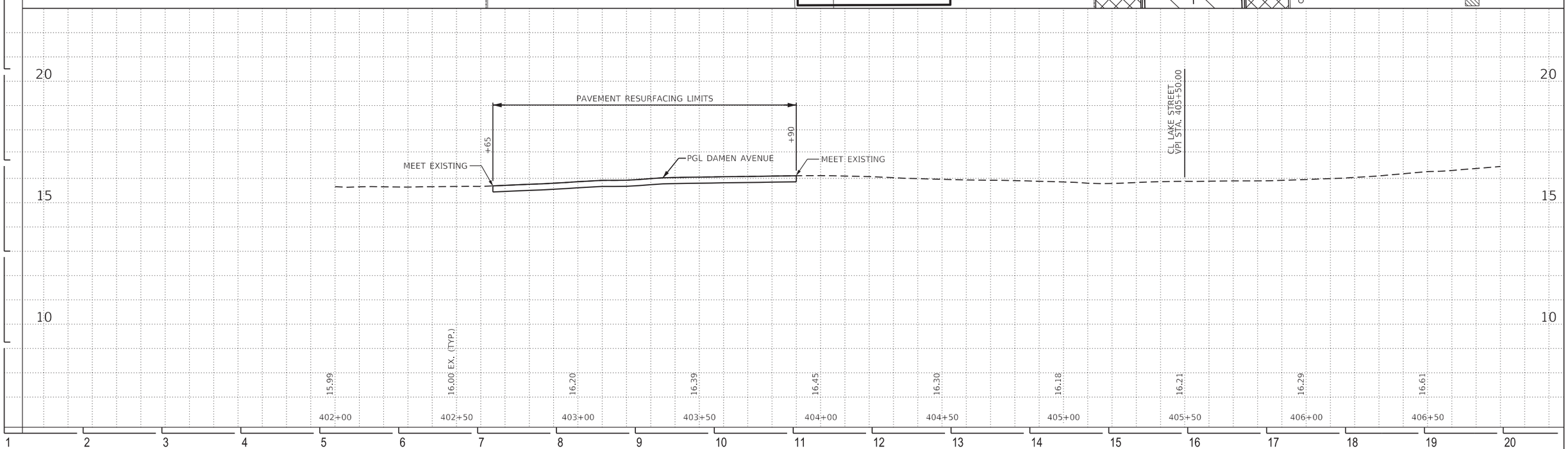

DESIGN BY:	YA		01/27/2020	ISSUE FOR BID	YA	YMD	EJL		
DRAWN BY:	ML		10/04/2019	ISSUE FOR OUC EFP	CJB	YMD	EJL		
CHECKED BY:	EJL		06/14/2019	ISSUE FOR 100% DESIGN	LAB	YMD	EJL		
APPROVED BY:	EJL		06/14/2019	ISSUE FOR PERMIT	LAB	YMD	EJL		
CDOT/APPROVED BY:		NO.	DATE	REVISIONS	DES.	DRW.	CHK.	DCCO	CDOT

MILHOUSE
333 South Wabash Avenue
Suite 2901
Chicago, IL 60604
t 312.994.8701
f 312.987.0071
www.milhouseinc.com

PERKINS+WILL
The Wrigley Building
410 North Michigan Ave.
Suite 1600
Chicago, IL 60611
t 312.755.0770
f 312.755.0775
www.perkinswill.com

CDOT
CHICAGO DEPARTMENT OF TRANSPORTATION
DIVISION OF ENGINEERING

154 N DAMEN AVE - DAMEN GREEN LINE STATION

PROPOSED IMPROVEMENTS

CDOT PROJECT D-7-135

DATE: 01/27/2020

SPEC. NO.

DRAWING NO. C50-02

REVISION NO.

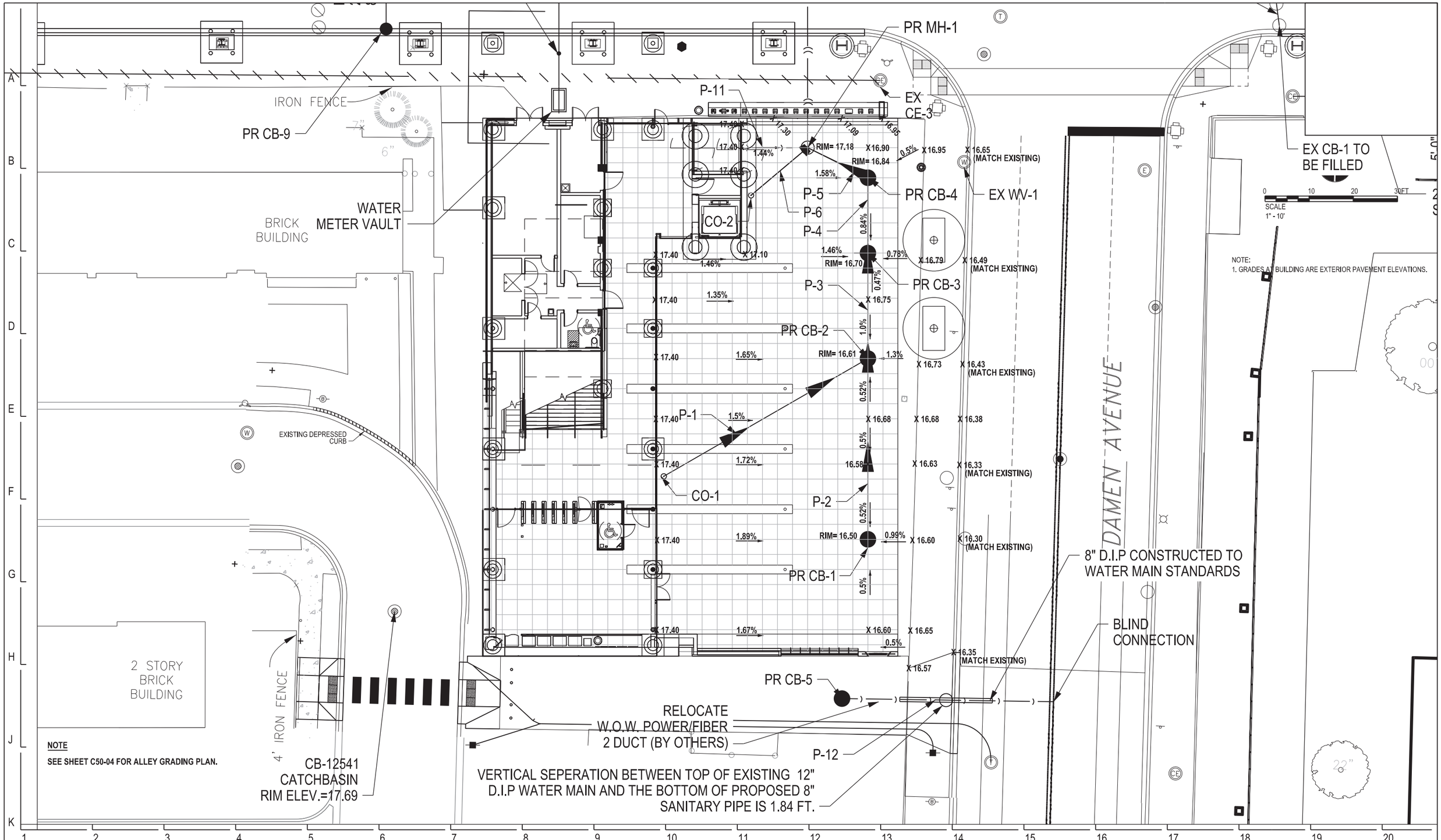

NOTE

SEE SHEET C50-04 FOR ALLEY GRADING PLAN.

DESIGN BY:	YA		01/27/2020	ISSUE FOR BID	YA	YMD	EJL		
DRAWN BY:	ML		10/04/2019	ISSUE FOR OUC EFP	CJB	YMD	EJL		
CHECKED BY:	EJL		06/14/2019	ISSUE FOR 100% DESIGN	LAB	YMD	EJL		
APPROVED BY:	EJL		06/14/2019	ISSUE FOR PERMIT	LAB	YMD	EJL		
CDOT/APPROVED BY:		NO.	DATE	REVISIONS	DES.	DRW.	CHK.	DCCO	CDOT

MILHOUSE
333 South Wabash Avenue
Suite 2901
Chicago, IL 60604
t 312.994.8701
f 312.987.0071
www.milhouseinc.com

PERKINS+WILL
The Wrigley Building
410 North Michigan Ave.
Suite 1600
Chicago, IL 60611
t 312.755.0770
f 312.755.0775
www.perkinswill.com

CDOT
CHICAGO DEPARTMENT OF TRANSPORTATION
DIVISION OF ENGINEERING

154 N DAMEN AVE - DAMEN GREEN LINE STATION

PROPOSED PLAZA GRADING IMPROVEMENTS

CDOT PROJECT D-7-135 | DATE: 01/27/2020

SPEC. NO.

DRAWING NO. C50-03

REVISION NO.

LEGEND

- OVERLAY
- FULL-DEPTH PAVEMENT
- PROPOSED 5' PCC SIDEWALK

NOTES

1) INSTALL 3/8" PREFORMED JOINT FILLER BETWEEN PROPOSED SIDEWALK AND DAMEN GREEN LINE STATION BUILDING AT LOCATIONS WHERE THERE IS NOT A GRANITE CURB ADJACENT.

2) SEE SHEET C50-05 FOR ADA CROSSWALK DETAILS.

N

0 5 10 15FT

SCALE
1" - 5'

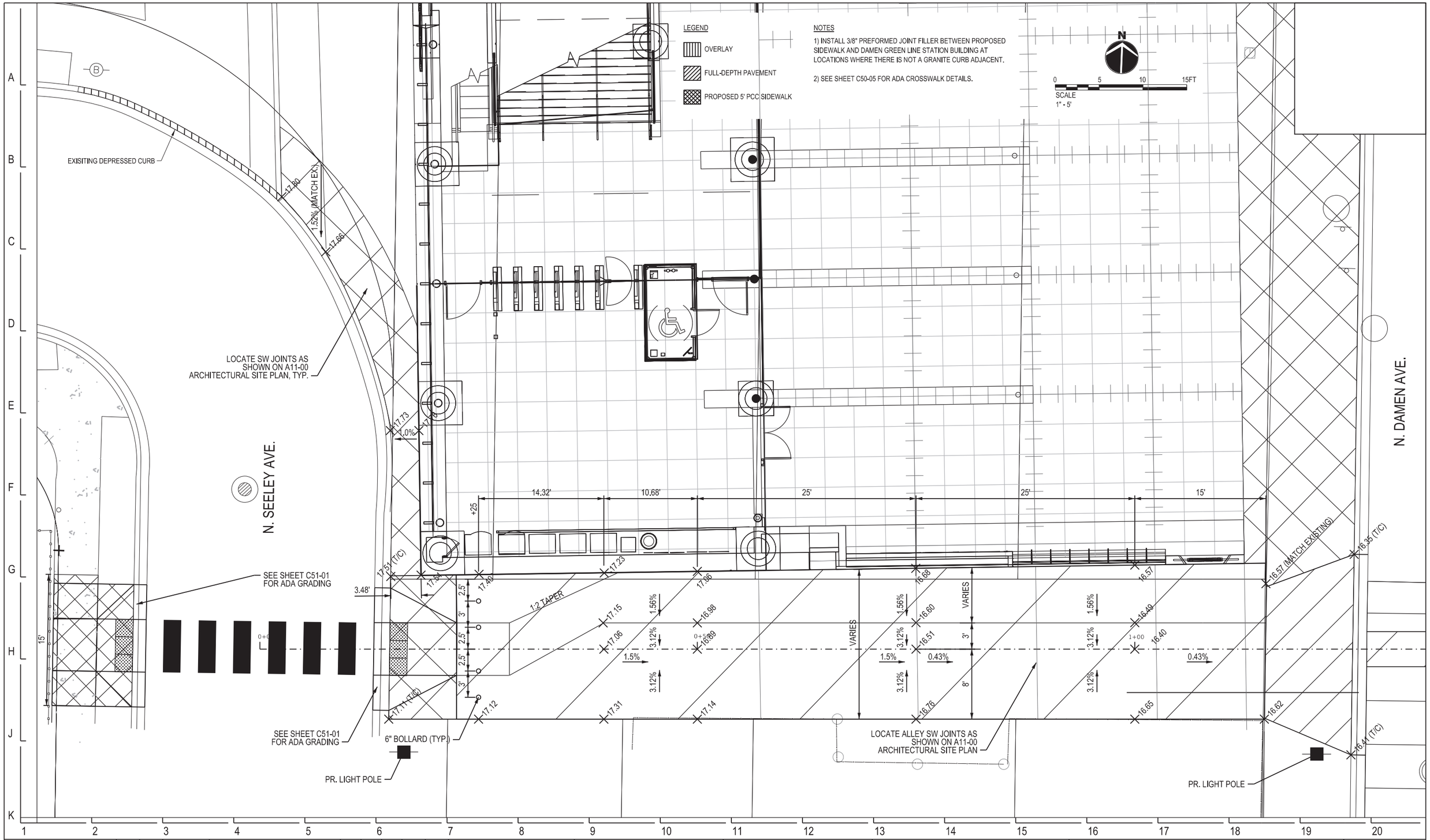

DESIGN BY:	YA		01/27/2020	ISSUE FOR BID	YA	YMD	EJL		
DRAWN BY:	ML		10/04/2019	ISSUE FOR OUC EFP	CJB	YMD	EJL		
CHECKED BY:	EJL		06/14/2019	ISSUE FOR 100% DESIGN	LAB	YMD	EJL		
APPROVED BY:	EJL		06/14/2019	ISSUE FOR PERMIT	LAB	YMD	EJL		
CDOT/APPROVED BY:		NO.	DATE	REVISIONS	DES.	DRW.	CHK.	DCCO	CDOT

MILHOUSE
333 South Wabash Avenue
Suite 2901
Chicago, IL 60604
t 312.994.8701
f 312.987.0071
www.milhouseinc.com

PERKINS+WILL
The Wrigley Building
410 North Michigan Ave.
Suite 1600
Chicago, IL 60611
t 312.755.0770
f 312.755.0775
www.perkinswill.com

CDOT
CHICAGO DEPARTMENT OF TRANSPORTATION
DIVISION OF ENGINEERING

154 N DAMEN AVE - DAMEN GREEN LINE STATION

PROPOSED GRADING
ALLEY AND SEELEY AVENUE

CDOT PROJECT D-7-135

DATE: 01/27/2020

SPEC. NO.

DRAWING NO.
C50-04

REVISION NO.

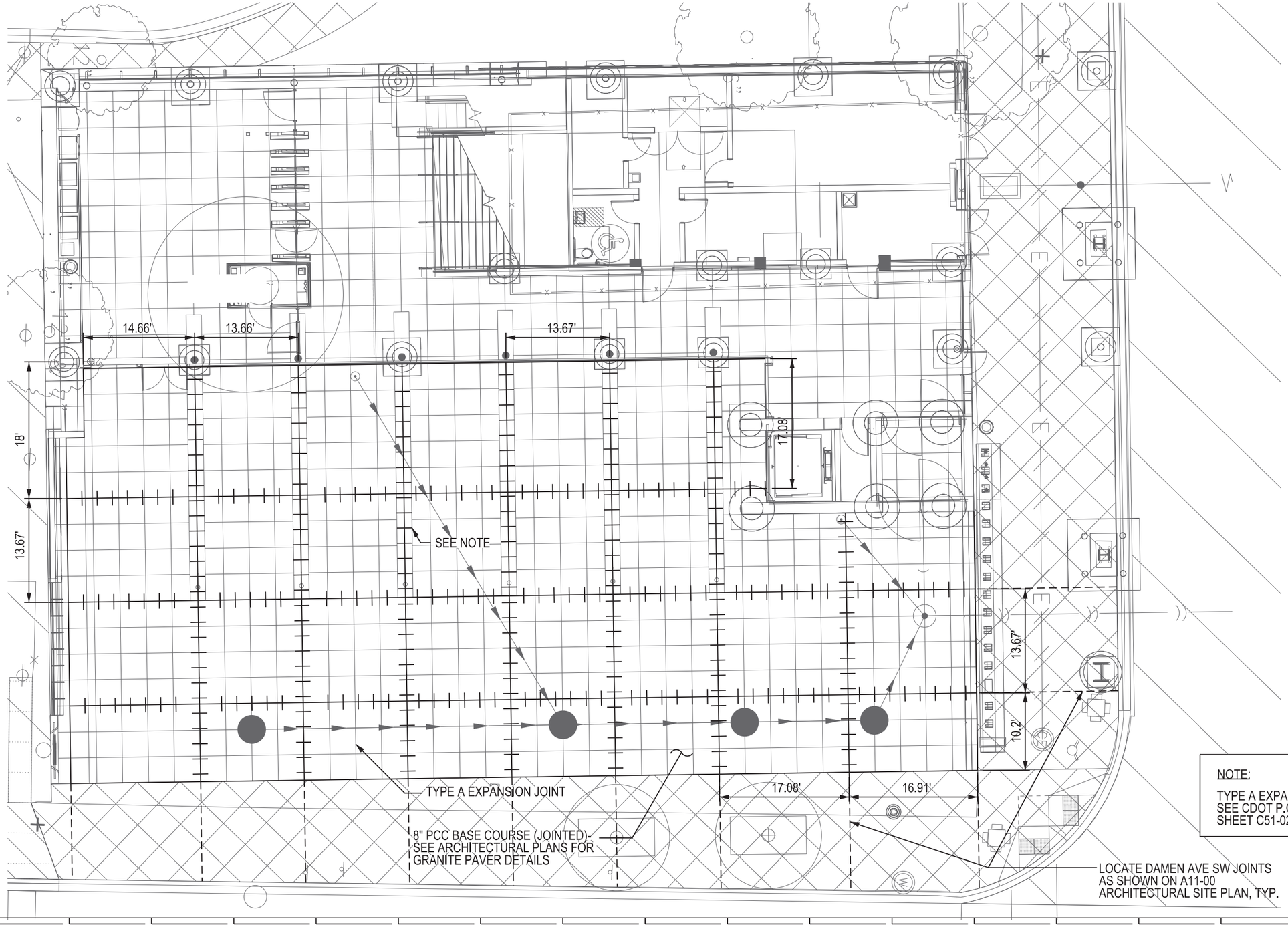

SCALE
NTS

NOTE:

TYPE A EXPANSION JOINT DOWEL BARS
SEE CDOT P.C.C. PAVEMENT JOINT DETAILS
SHEET C51-02 (TYP.) ALL JOINTS TO BE DOWELED.

DESIGN BY:	YA		01/27/2020	ISSUE FOR BID	YA	YMD	EJL		
DRAWN BY:	ML		10/04/2019	ISSUE FOR OUC EFP	CJB	YMD	EJL		
CHECKED BY:	EJL		06/14/2019	ISSUE FOR 100% DESIGN	LAB	YMD	EJL		
APPROVED BY:	EJL		06/14/2019	ISSUE FOR PERMIT	LAB	YMD	EJL		
CDOT/APPROVED BY:		NO.	DATE	REVISIONS	DES.	DRW.	CHK.	DCCO	CDOT

MILHOUSE
333 South Wabash Avenue
Suite 2901
Chicago, IL 60604
t 312.994.8701
f 312.987.0071
www.milhouseinc.com

PERKINS+WILL
The Wrigley Building
410 North Michigan Ave.
Suite 1600
Chicago, IL 60611
t 312.755.0770
f 312.755.0775
www.perkinswill.com

CDOT
CHICAGO DEPARTMENT
OF TRANSPORTATION
DIVISION OF ENGINEERING

154 N DAMEN AVE - DAMEN GREEN LINE STATION

PLAZA JOINTING DETAIL

CDOT PROJECT D-7-135

DATE: 01/27/2020

SPEC. NO.

DRAWING NO.
C50-05

REVISION NO.

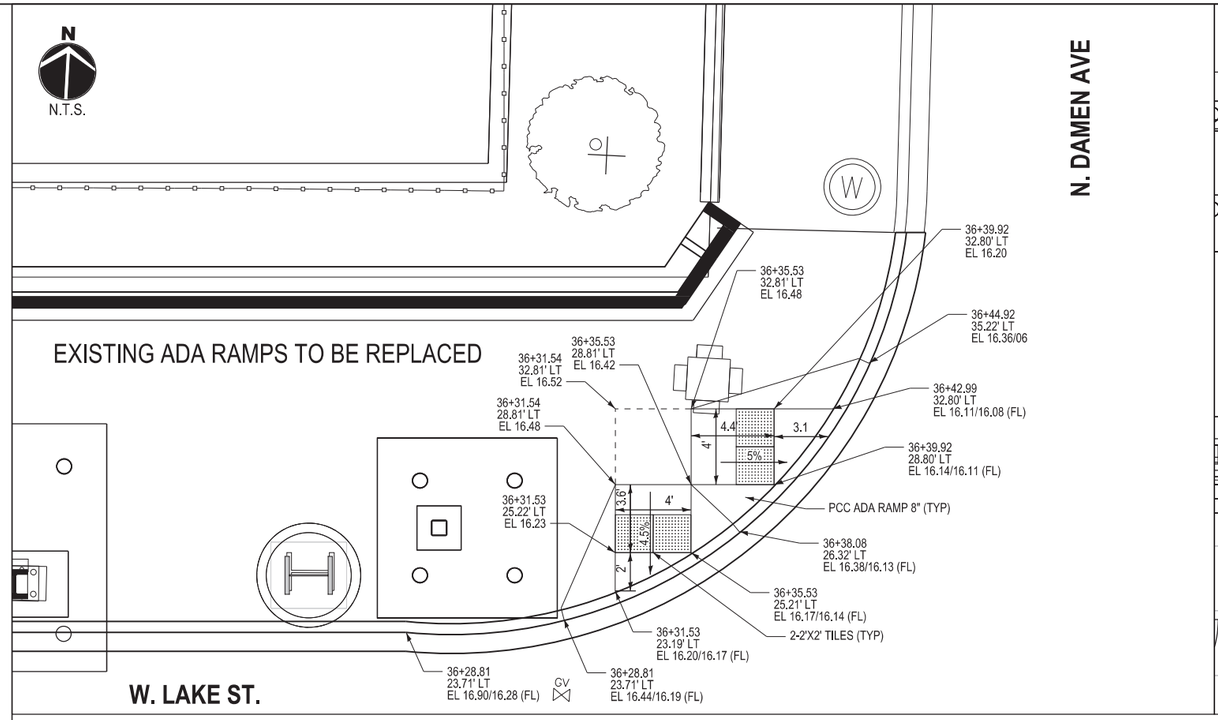

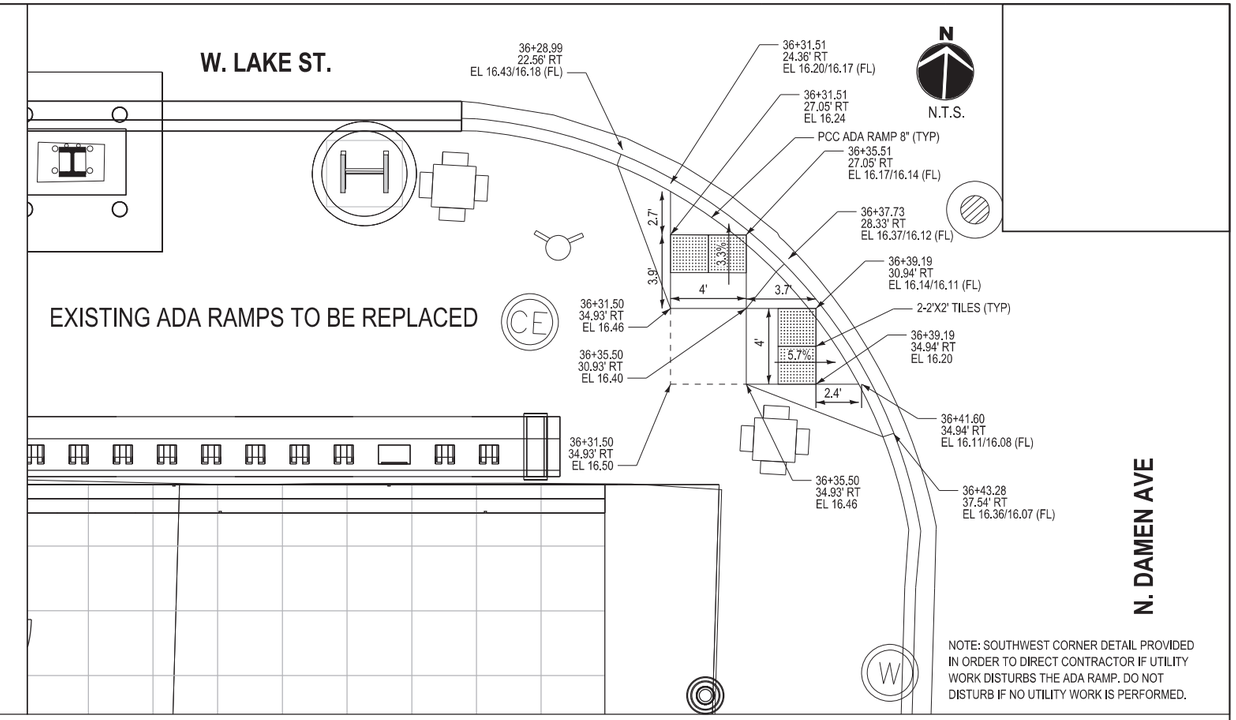

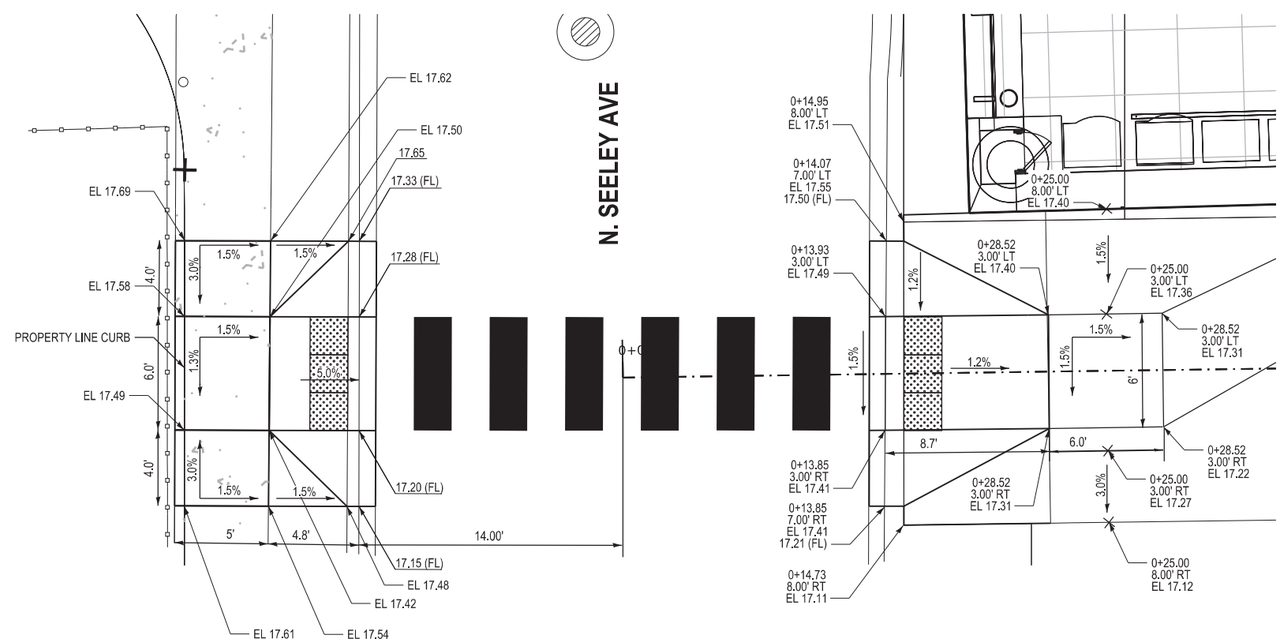

DESIGN BY:	YA		01/27/2020	ISSUE FOR BID	YA	YMD	EJL		
DRAWN BY:	ML		10/04/2019	ISSUE FOR OUC EFP	CJB	YMD	EJL		
CHECKED BY:	EJL		06/14/2019	ISSUE FOR 100% DESIGN	LAB	YMD	EJL		
APPROVED BY:	EJL		06/14/2019	ISSUE FOR PERMIT	LAB	YMD	EJL		
CDOT/APPROVED BY:		NO.	DATE	REVISIONS	DES.	DRW.	CHK.	DCCO	CDOT

MILHOUSE
333 South Wabash Avenue
Suite 2901
Chicago, IL 60604
t 312.994.8701
f 312.987.0071
www.milhouseinc.com

PERKINS+WILL
The Wrigley Building
410 North Michigan Ave.
Suite 1600
Chicago, IL 60611
t 312.755.0770
f 312.755.0775
www.perkinswill.com

CDOT
CHICAGO DEPARTMENT OF TRANSPORTATION
DIVISION OF ENGINEERING

154 N DAMEN AVE - DAMEN GREEN LINE STATION

CURB RAMP DETAILS

CDOT PROJECT D-7-135 | DATE: 01/27/2020

SPEC. NO.

DRAWING NO. C51-01

REVISION NO.

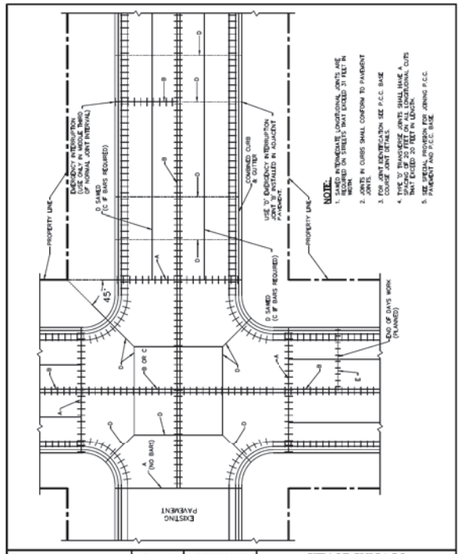

DATE	REVISION	CITY OF CHICAGO
1/1/2014	REVISION 1	TYPICAL JOINT LAYOUT FOR P.C. CONCRETE PAVEMENTS
DATE 12/26/06	SHEET A-2-3A	DRAWN BY CDOT

CDOT CHICAGO DEPARTMENT OF TRANSPORTATION

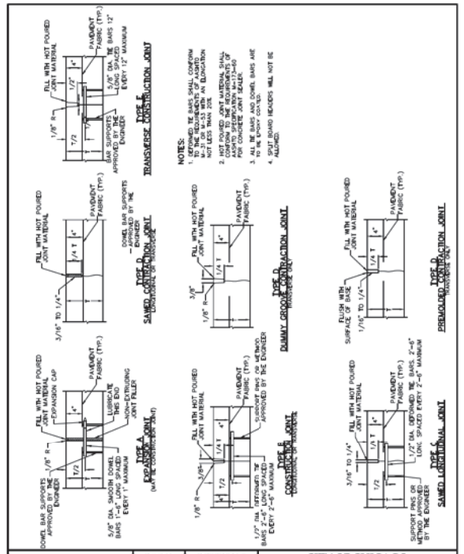

DATE	REVISION	CITY OF CHICAGO
1/1/2014	REVISION 1	P.C.C. PAVEMENT JOINT DETAILS
DATE 12/26/06	SHEET A-2-3B	DRAWN BY CDOT

CDOT CHICAGO DEPARTMENT OF TRANSPORTATION

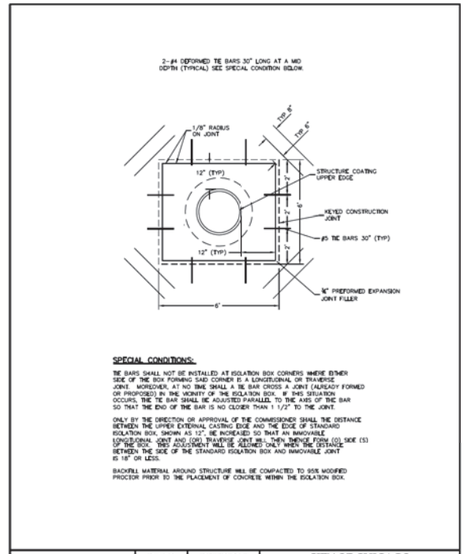

DATE	REVISION	CITY OF CHICAGO
1/1/2014	REVISION 1	DETAILS OF STRUCTURE CASTING ISOLATION BOX
DATE 12/21/06	SHEET A-2-10A	DRAWN BY CDOT

CDOT CHICAGO DEPARTMENT OF TRANSPORTATION

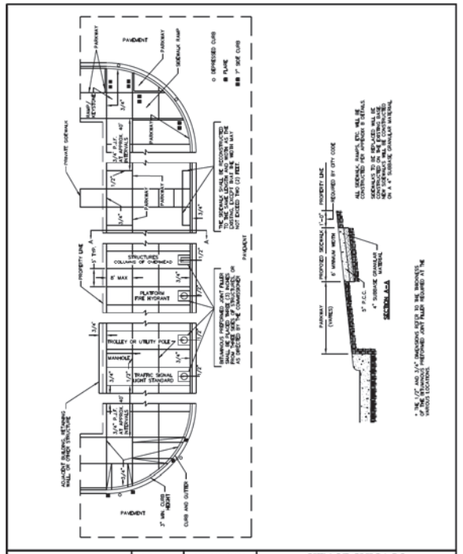

DATE	REVISION	CITY OF CHICAGO
1/1/2014	REVISION 1	DETAILS OF PORTLAND CEMENT CONCRETE CONSTRUCTION
DATE 12/22/06	SHEET A-3-2	DRAWN BY CDOT

CDOT CHICAGO DEPARTMENT OF TRANSPORTATION

NOTES:

CURB RAMP LAYOUT B-1-2 IS PREFERRED WHEREVER POSSIBLE. WHERE RAMPS ARE LOCATED IN THE CORNER RADIUS, LAYOUT B-1-3 SHALL BE USED.

CURB RAMP PLACEMENT SHALL BE COORDINATED AS REQUIRED TO ALLOW FOR A 4' MINIMUM WIDTH SIDEWALK AROUND EACH CORNER OF INTERSECTION. SIDEWALK NOT TO BE CBSTRUCTED BY CURB RAMPS OR OTHER BARRIERS AND SHALL HAVE A CROSS SLOPE OF 1:64 MAXIMUM.

THE BLENDED TRANSITION LAYOUT B-1-7 (AND SIMILAR) MAY BE USED WHERE TWO RAMPS ARE NOT POSSIBLE DUE TO GEOMETRIC CONSTRAINTS, SUCH AS LIMITED SIDEWALK WIDTH OR GRADE ELEVATIONS. THE BLENDED TRANSITION SHALL NOT BE USED IF ACCESS TO AN EXISTING FACILITY WOULD BE REDUCED.

THE SHARED PERPENDICULAR RAMP AT CORNER LAYOUT B-1-10 IS NOT PREFERRED AND MAY ONLY BE USED WITH PERMISSION FROM THE COMMISSIONER.

SEE SHEET B-3-3 FOR TRANSITION PANEL GUIDELINES.

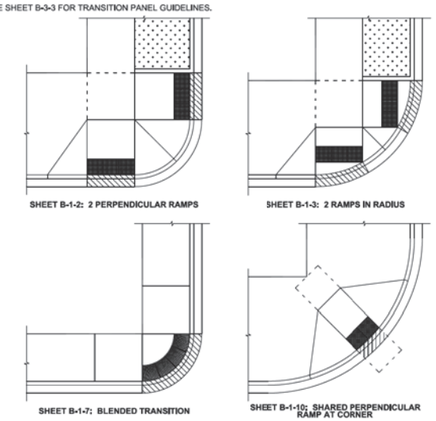

DATE	REVISION
02/20/07	REVISION 1
11/15/07	REVISION 2
11/14/08	REVISION 3
11/02/09	REVISION 4
08/10/12	REVISION 5

City of Chicago Rahm Emanuel, Mayor Rebecca Hyde, Commissioner Division of Engineering www.cityofchicago.org

CDOT CHICAGO DEPARTMENT OF TRANSPORTATION

CITY OF CHICAGO
TYPICAL CORNER RAMP LAYOUTS
SHEET B-1-1

SCALE: NOT TO SCALE DATE: 10/23/2006 DRAWN BY: CDOT CHECKED BY: LCM

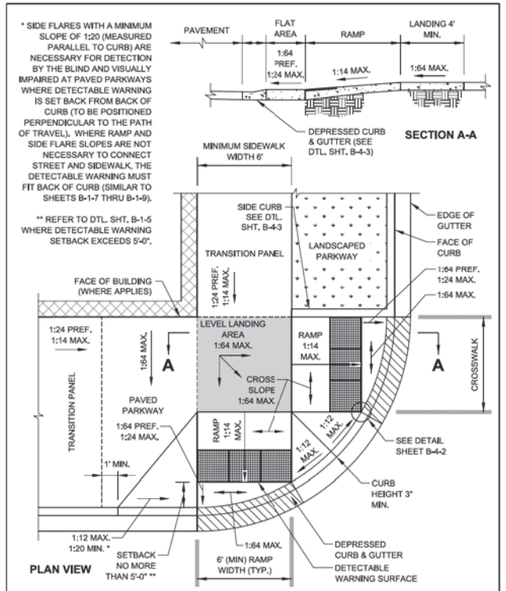

DATE	REVISION
02/20/07	REVISION 1
11/15/07	REVISION 2
11/14/08	REVISION 3
11/02/09	REVISION 4
08/10/12	REVISION 5

City of Chicago Rahm Emanuel, Mayor Rebecca Hyde, Commissioner Division of Engineering www.cityofchicago.org

CDOT CHICAGO DEPARTMENT OF TRANSPORTATION

CITY OF CHICAGO
2 PERPENDICULAR RAMPS AT CORNER WITH RAMPS IN CURB RADIUS
SHEET B-1-3

SCALE: NOT TO SCALE DATE: 10/23/2006 DRAWN BY: CDOT CHECKED BY: LCM

NOTES:

A. DETECTABLE WARNING IS NOT REQUIRED AT ALLEY RETURNS.

B. RAMP DETAILS ARE DEPENDENT UPON SITE SPECIFIC CONDITIONS (WHERE RAMPS ARE NECESSARY). SEE APPROPRIATE RAMP SHEET AS REQUIRED (TYP.).

C. SEE DETAIL B-2-5 FOR REDUCED WIDTH (4' MIN.) PEDESTRIAN ACCESSIBLE ROUTE ACROSS ALLEY / DRIVEWAY (TO ALLOW FOR ADDITIONAL SLOPE AT ALLEY / DRIVEWAY).

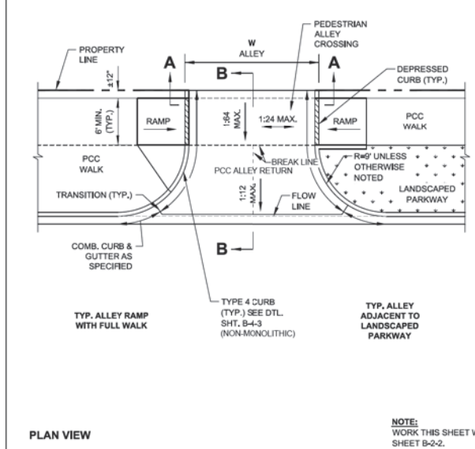

NOTE:
WORK THIS SHEET WITH SHEET B-2-2.

DATE	REVISION
02/20/07	REVISION 1
11/15/07	REVISION 2
11/14/08	REVISION 3
11/02/09	REVISION 4
08/10/12	REVISION 5
03/01/14	REVISION 6

City of Chicago Rahm Emanuel, Mayor Rebecca Hyde, Commissioner Division of Engineering www.cityofchicago.org

CDOT CHICAGO DEPARTMENT OF TRANSPORTATION

CITY OF CHICAGO
ALLEY RETURN PLAN VIEW
SHEET B-2-1

SCALE: NOT TO SCALE DATE: 10/23/2006 DRAWN BY: CDOT CHECKED BY: LCM

DESIGN BY:	YA		01/27/2020	ISSUE FOR BID	YA	YMD	EJL		
DRAWN BY:	ML		10/04/2019	ISSUE FOR OUC EFP	CJB	YMD	EJL		
CHECKED BY:	EJL		06/14/2019	ISSUE FOR 100% DESIGN	LAB	YMD	EJL		
APPROVED BY:	EJL		06/14/2019	ISSUE FOR PERMIT	LAB	YMD	EJL		
CDOT/APPROVED BY:		NO.	DATE	REVISIONS	DES.	DRW.	CHK.	DCCO	CDOT

MILHOUSE
333 South Wabash Avenue
Suite 2901
Chicago, IL 60604
t 312.994.8701
f 312.987.0071
www.milhouseinc.com

PERKINS+WILL
The Wrigley Building
410 North Michigan Ave.
Suite 1600
Chicago, IL 60611
t 312.755.0770
f 312.755.0775
www.perkinswill.com

CDOT CHICAGO DEPARTMENT OF TRANSPORTATION
DIVISION OF ENGINEERING

154 N DAMEN AVE - DAMEN GREEN LINE STATION

ADA DETAILS

CDOT PROJECT D-7-135 | DATE: 01/27/2020

SPEC. NO.

DRAWING NO. C51-02

REVISION NO.

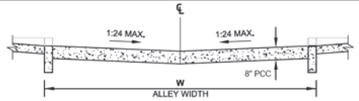

SECTION A-A: CROSS SECTION AT PROPERTY LINE

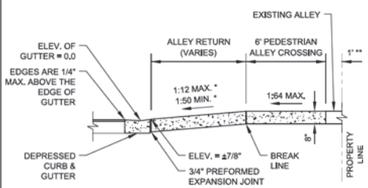

SECTION B-B: LONGITUDINAL SECTION SHOWING DEPRESSED CURB & GUTTER

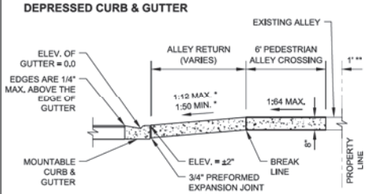

SECTION B-B: LONGITUDINAL SECTION SHOWING MOUNTABLE CURB & GUTTER

ALLEY RETURN NOTES:

A. WHEN A PORTION OF AN EXISTING PAVED ALLEY IS REMOVED TO ADJUST THE ALLEY PAVEMENT TO THE NEW GRADE, 3/4" PREFORMED EXPANSION JOINT MATERIAL SHALL BE PLACED ON THE PROPERTY LINE OTHERWISE THE JOINT IS OMITTED. THE COST OF FURNISHING AND PLACING THE 3/4" PREFORMED EXPANSION JOINT MATERIAL SHALL BE INCLUDED IN THE COST OF THE PORTLAND CEMENT CONCRETE ALLEY RETURN.

B. SAWED JOINTS SHALL BE SEALED WITH A POURED MATERIAL MEETING THE REQUIREMENTS OF SECTION 1050 OF THE SSRBC.

* SLOPE VARIES AND IS NOT GOVERNED BY ADA

** THE SLOPE OF THE ALLEY IN THE 1' SPACE ADJACENT TO THE PROPERTY LINE MAY BE ALTERED UP TO 10% TO MEET EXISTING CONDITIONS

NOTE:
WORK THIS SHEET WITH SHEET B-2-1.

DATE	REVISION
02/20/07	REVISION 1
11/15/07	REVISION 2
11/14/08	REVISION 3
11/02/09	REVISION 4
08/10/12	REVISION 5
01/01/14	REVISION 6

City of Chicago — Rahm Emanuel, Mayor — Department of Transportation — Commissioner — Gabe Klein — www.cityofchicago.org — CDOT

SCALE: NOT TO SCALE
DATE: 10/23/2006

CITY OF CHICAGO
ALLEY RETURN SECTIONS
SHEET B-2-2

DRAWN BY: CDOT
CHECKED BY: GK

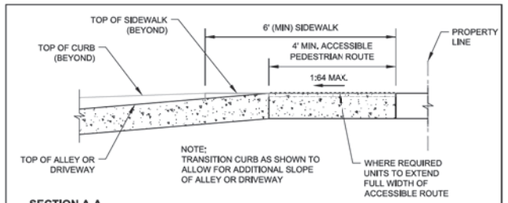

SECTION A-A

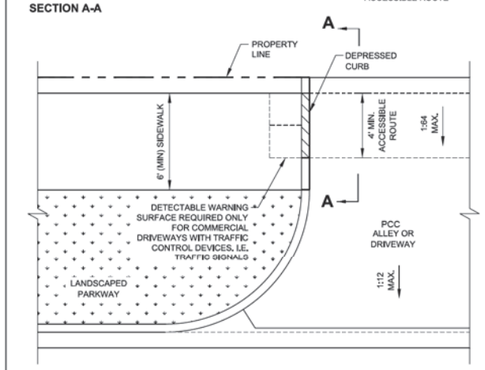

PLAN VIEW

DATE	REVISION
02/20/07	REVISION 1
11/15/07	REVISION 2
11/14/08	REVISION 3
11/02/09	REVISION 4
08/10/12	REVISION 5
01/01/14	REVISION 6

City of Chicago — Rahm Emanuel, Mayor — Department of Transportation — Commissioner — Gabe Klein — www.cityofchicago.org — CDOT

SCALE: NOT TO SCALE
DATE: 10/23/2006

CITY OF CHICAGO
ALLEY & DRIVEWAY DETAIL FOR REDUCED WIDTH PEDESTRIAN ACCESS ROUTE
SHEET B-2-5

DRAWN BY: CDOT
CHECKED BY: GK

SLOPE CONVERSION CHART

% SLOPE	SLOPE RATIO	INCHES PER FOOT	DECIMAL FEET PER FOOT
16.67%	1:6	2"	0.167'
10%	1:10	1 1/4"	0.104'
8.33%	1:12	1"	0.083'
7.14%	1:14	7/8"	0.073'
5%	1:20	5/8"	0.052'
4.17%	1:24	1/2"	0.042'
2%	1:50	1/4"	0.021'
1.56%	1:64	3/16"	0.016'

DATE	REVISION
02/20/07	REVISION 1
11/15/07	REVISION 2
11/14/08	REVISION 3
11/02/09	REVISION 4
08/10/12	REVISION 5

City of Chicago — Rahm Emanuel, Mayor — Department of Transportation — Commissioner — Gabe Klein — www.cityofchicago.org — CDOT

SCALE: NOT TO SCALE
DATE: 10/23/2006

CITY OF CHICAGO
CONVERSION CHARTS
SHEET B-3-1

DRAWN BY: CDOT
CHECKED BY: LGM

GENERAL NOTES:

1. THE DETECTABLE WARNING USED SHALL BE CHOSEN FROM THE CHICAGO DEPARTMENT OF TRANSPORTATION LIST OF APPROVED DETECTABLE WARNING PRODUCTS (AVAILABLE ON THE CITY OF CHICAGO WEBSITE). IT IS NOT ACCEPTABLE TO INSTALL TWO DIFFERENT DETECTABLE WARNING PRODUCTS ADJACENT TO ONE ANOTHER AT ANY LOCATION. IN THE CENTRAL BUSINESS DISTRICT, GRANITE OR OTHER SPECIALTY PAVING MATERIALS MAY BE SUBMITTED TO THE COMMISSIONER FOR APPROVAL.

2. THE DETECTABLE WARNING MUST BE INSTALLED A MAXIMUM OF 8" OR LESS FROM FACE OF CURB (SEE DETAIL SHEET B-4-2).

3. THE DETECTABLE WARNING MUST COVER FULL WIDTH OF RAMP EXCLUDING SIDE FLARES FOR A MINIMUM UNOBSTRUCTED DEPTH OF 24". THE DETECTABLE WARNING LOCATED ON THE SURFACES OF RAMPS IS TYPICALLY ORIENTED PERPENDICULAR TO THE RUN OF THE RAMP UNLESS SPECIAL CIRCUMSTANCES OCCUR (SEE DETAIL SHEET B-1-5). THE DETECTABLE WARNING MUST BE PROVIDED FOR A MINIMUM DEPTH OF 24" FOR THE ENTIRE LENGTH OF THE SIDEWALK WHERE THE SIDEWALK IS FLUSH WITH THE STREET (DEPRESSED CURB OR FLUSH TRANSITION). IF IT IS NECESSARY TO CUT A UNIT(S) IN THE PROVISION OF A COMPLIANT RAMP OR SIDEWALK WITH 24" MINIMUM DEPTH OF DETECTABLE WARNING, THE UNITS SHALL BE CUT IN A NEAT AND WORKMAN LIKE MANNER PER MANUFACTURER'S REQUIREMENTS WITH A MINIMUM OF THREE PINS OR ANCHOR POINTS (WHERE APPLICABLE). THE UNITS SHALL BE ARRANGED SO THAT THE CUT UNITS ARE LARGE ENOUGH TO BE PROPERLY AND ADEQUATELY SECURED. CUT UNITS SHALL NOT BE USED UNLESS ALL OTHER DESIGN OPTIONS HAVE BEEN EXHAUSTED. THE USE OF SALVAGE PIECES FROM UNITS THAT ARE CUT WILL NOT BE PERMITTED WITHOUT WRITTEN APPROVAL OF THE COMMISSIONER. CUT UNIT SALVAGE PIECES NOT APPROVED FOR USE MUST BE REMOVED FROM THE SITE AND DISPOSED OF PROPERLY.

4. WHERE APPLICABLE, A COMBINATION OF STRAIGHT AND RADIAL DETECTABLE WARNING UNITS MAY BE USED ON COMPOUND AND LARGE RADII. CONTRACTOR MUST MAKE THIS DETERMINATION AND VERIFY IN FIELD.

5. THE DETECTABLE WARNING MUST CONTRAST WITH ADJACENT PAVEMENT. IF LIGHT COLORED PAVEMENT IS USED THE DETECTABLE WARNING COLOR SHALL BE RED. IF A DARK COLORED PAVEMENT IS USED THE DETECTABLE WARNING COLOR SHALL BE YELLOW. CONTRACTOR TO VERIFY THAT PROPER CONTRAST IS OBTAINED.

6. PRIOR TO PLACING CONCRETE FOR DEPRESSED CURBS, RAMPS, OR SIDEWALKS THE CONTRACTOR SHALL VERIFY THAT LAYOUT OR DESIGN COMPLIES WITH THE REQUIREMENTS OF THE CDOT ADA STANDARDS.

7. RAMP WIDTH MUST BE A MINIMUM OF 6'-0" AND IN INCREMENTS OF 1'-0", EXCEPT WHEN USING THE PERPENDICULAR RAMP AT CORNER (OR OTHER SPECIAL CDOT APPROVED CONDITIONS), WHICH HAS A MINIMUM WIDTH OF 4'-0".

8. THE MAXIMUM ALLOWABLE RAMP RUNNING SLOPE IS 1:14, MEASURED AT ANY PORTION OF THE RAMP. IF POSSIBLE, A MORE GRADUAL SLOPE SHALL BE USED. GRADE BREAKS AT THE TOP AND BOTTOM OF RAMPS SHALL BE PERPENDICULAR TO THE DIRECTION OF RAMP RUN.

9. THE MAXIMUM ALLOWABLE RAMP CROSS SLOPE IS 1:64, MEASURED AT ANY PORTION OF THE RAMP. IF POSSIBLE, A MORE GRADUAL SLOPE SHALL BE USED.

10. THE MAXIMUM ALLOWABLE RAMP LANDING SLOPE IS 1:64, MEASURED AT ANY LOCATION AND IN ANY DIRECTION ON THE LANDING. THE RAMP LANDING WIDTH SHALL MATCH THE FULL WIDTH OF THE RAMP FOR A MINIMUM UNOBSTRUCTED DEPTH OF 4'-0". RAMP LANDINGS SHALL BE PROVIDED AT THE TOP AND/OR BOTTOM OF RAMPS WHERE TURNING IS REQUIRED.

11. RAMP SIDE FLARES SHALL BE INSTALLED AT ANY LOCATION WHERE THE SURFACE ADJACENT TO THE RAMP SURFACE IS INTENDED FOR PEDESTRIAN USE. TRIPPING HAZARDS, INCLUDING STEPS, DROP-OFFS, OR CURBS SHALL NOT BE LOCATED WITHIN THE LIMITS OF THE SIDEWALK. RAMP SIDE FLARES ARE NOT REQUIRED WHERE THE SURFACE ADJACENT TO THE RAMP SURFACE IS LANDSCAPED OR IS OCCUPIED BY A BARRIER THAT BLOCKS PEDESTRIAN ACCESS. EXCEPTIONS TO THIS RULE MAY BE SUBMITTED TO THE COMMISSIONER FOR APPROVAL.

DATE	REVISION
02/20/07	REVISION 1
11/15/07	REVISION 2
11/14/08	REVISION 3
11/02/09	REVISION 4
08/10/12	REVISION 5

City of Chicago — Rahm Emanuel, Mayor — Department of Transportation — Commissioner — Gabe Klein — www.cityofchicago.org — CDOT

SCALE: NOT TO SCALE
DATE: 10/23/2006

CITY OF CHICAGO
GENERAL NOTES
SHEET B-3-2

DRAWN BY: CDOT
CHECKED BY: LGM

GENERAL NOTES (CONTINUED):

12. UTILITIES, SUCH AS LIGHT POLES, TRAFFIC POLES AND HYDRANTS, MAY BE LOCATED IN THE FLARE OF THE RAMP BUT ARE NOT ALLOWED ON THE RAMP SURFACE OR LANDING AREAS. EXISTING UTILITY STRUCTURE LIDS MAY REMAIN WITHIN THE FLARE OR ON THE SURFACE OF THE RAMP IF THE REQUIREMENTS OF GENERAL NOTE #19 ARE MET.

13. ALL LOCATIONS WITH TYPE 4 OR TYPE B CURB (EXCEPT ALLEY APRONS) SHALL BE CONSTRUCTED AS CURB AND GUTTER TYPE BV.12 THROUGH THE LIMITS OF THE CORNER AND THE CURB RAMPS.

14. ALTERATIONS SHALL NOT DECREASE THE ACCESSIBILITY TO EXISTING FACILITIES, SIDEWALKS LEADING TO EXISTING FACILITIES, OR DOOR OR GATE ACCESS POINTS TO FACILITIES. THE ELEVATION AT THE EXISTING PROPERTY LINE OR FACILITY ACCESS POINT SHALL BE MAINTAINED AT A MINIMUM. ANY ALTERATIONS ADJACENT TO OR AFFECTING A FACILITY ACCESS POINT SHALL RESULT IN IMPROVED ACCESS OR AT A MINIMUM A REPLICATION OF EXISTING CONDITIONS, INCLUDING SIDEWALK SLOPES AND SURFACE CONDITIONS. FACILITIES INCLUDE, BUT ARE NOT LIMITED TO PRIVATE BUSINESSES, PUBLIC BUILDINGS, RESIDENCES, BUS STOPS, PUBLIC BENCHES, PAY PHONES, AND PARKING METERS.

15. THE MINIMUM CROSSWALK WIDTH IS 6'-0". CROSSWALKS SHALL BE LOCATED AS SHOWN IN THE PLAN SHEETS DEPENDING ON THE TYPE OF CURB RAMP USED, BEYOND THE CURB FACE AT THE BASE OF CURB RAMPS, A CLEAR SPACE OF 4'-0" BY 4'-0" MINIMUM SHALL BE PROVIDED WITHIN THE STRIPES OF THE CROSSWALK (WHERE PROVIDED).

16. IF SIDEWALK AND ALLEY ARE AT THE SAME GRADE, A RAMP IS NOT REQUIRED. IF SIDEWALK AND DRIVEWAY ARE AT THE SAME GRADE, A RAMP IS NOT REQUIRED BUT DETECTABLE WARNING UNITS ARE STILL REQUIRED IF THE DRIVEWAY HAS TRAFFIC CONTROL DEVICES (I.E. TRAFFIC SIGNALS).

17. MAIN LINE SIDEWALK SHALL HAVE A MAXIMUM CROSS SLOPE NOT TO EXCEED 1:64 FOR THE FULL WIDTH OF WALK UNLESS OTHERWISE APPROVED BY THE COMMISSIONER. WHERE TURNING IS REQUIRED AND WHERE SIDEWALKS INTERSECT, THE SLOPE OF THE SIDEWALK SHALL NOT EXCEED 1:64 IN ANY DIRECTION.

18. MAIN LINE SIDEWALK RUNNING SLOPES SHALL NOT EXCEED 1:24 OR THE GENERAL GRADE ESTABLISHED FOR THE ADJACENT STREET, WHICH EVER IS HIGHER.

19. THERE SHALL BE NO VERTICAL LEVEL DIFFERENCES BETWEEN SURFACES GREATER THAN 1/4" ON THE MAIN LINE SIDEWALK. THERE SHALL BE NO HORIZONTAL GAPS OR OPENINGS GREATER THAN 1/2" ON THE MAIN LINE SIDEWALK.

20. WHERE OBSTRUCTIONS EXIST ON THE MAINLINE SIDEWALK, THE CLEAR WIDTH OF USEABLE SIDEWALK SHALL NOT BE LESS THAN 4'-0". OBSTRUCTIONS INCLUDE, BUT ARE NOT LIMITED TO SIDEWALK BENCHES, FIRE HYDRANTS, SIGNAL OR LIGHT POLES, NEWSPAPER DISPENSERS, TRASH RECEPTACLES, AND UTILITY PEDESTALS.

21. CURB RAMPS AND LANDING (KEYSTONE) TO BE CONSTRUCTED WITH 8" THICK CONCRETE AT ALL TRAFFIC SIGNALIZED INTERSECTIONS AND INDUSTRIAL STREET INTERSECTIONS. AT ALL OTHER LOCATIONS, 5" THICK CONCRETE TO BE USED.

22. DEPRESSED CURB, RAMP, OR SIDEWALK DESIGNS OR LAYOUTS SHALL MAINTAIN OR IMPROVE EXISTING DRAINAGE AND THE EXISTING INTERSECTION GEOMETRY SHALL NOT BE MODIFIED WITHOUT CDOT APPROVAL.

23. ALL CONSTRUCTION DOCUMENTS MUST BE STAMPED BY A LICENSED ARCHITECT/LANDSCAPE ARCHITECT/ ENGINEER TO CERTIFY THAT THEY ARE IN ACCORDANCE WITH THE AMERICANS WITH DISABILITIES ACT (ADA) AND ALL CODES AND BUILDING ORDINANCES OF THE CITY OF CHICAGO AND THE STATE OF ILLINOIS.

24. NO DEVIATIONS FROM THESE STANDARDS ARE ALLOWED WITHOUT WRITTEN APPROVAL FROM THE COMMISSIONER.

DATE	REVISION
02/20/07	REVISION 1
11/15/07	REVISION 2
11/14/08	REVISION 3
11/02/09	REVISION 4
08/10/12	REVISION 5
01/01/14	REVISION 6

City of Chicago — Rahm Emanuel, Mayor — Department of Transportation — Commissioner — Gabe Klein — www.cityofchicago.org — CDOT

SCALE: NOT TO SCALE
DATE: 10/23/2006

CITY OF CHICAGO
GENERAL NOTES (CONTINUED)
SHEET B-3-3

DRAWN BY: CDOT
CHECKED BY: GK

ADA COMPLIANCE AND TRANSITION GUIDELINES
POLICY STATEMENT: ANY ALTERATION OF THE PUBLIC WAY MUST BE RESTORED IN AN ADA COMPLIANT MANNER

I. STREET/ALLEY RESTORATION

FOR ANY PROJECT WHERE, WITHIN THE PROJECT LIMITS, A CROSSWALK IS ENCOUNTERED OR WHERE THE PROJECT LIMITS TERMINATE WITHIN 4' OR LESS OF A CROSSWALK, THOSE CROSSWALKS AND THE ASSOCIATED CURB RAMPS MUST BE IMPROVED TO CURRENT ADA STANDARDS IF THEY ARE NOT COMPLIANT (SEE APPENDIX A.)

WHEN A PROJECT CALLS FOR ONLY AN INTERSECTION TO BE REPAVED, THE INTERSECTION LIMITS AS DEFINED BY THE AREA OUTLINED BY OUTERMOST CROSSWALK LINES AND ADJACENT CURB FACES AND ALL ADJOINING CROSSWALKS AND CURB RAMPS MUST BE IMPROVED TO CURRENT ADA STANDARDS IF THEY ARE NOT COMPLIANT (SEE APPENDIX A).

WHEN WORK IS LIMITED TO A SINGLE CORNER OF AN INTERSECTION, THE CURB RAMP MUST BE IMPROVED TO CURRENT ADA STANDARDS AND THE ADJACENT PAVEMENT MUST BE RESURFACED, AS NECESSARY TO PROVIDE FOR A FLUSH TRANSITION (SEE APPENDIX A).

WHEN ADA WORK IS LIMITED TO A SINGLE CORNER OF AN INTERSECTION, THE ADJACENT PAVEMENT MUST BE RESTORED (SEE APPENDIX A).

FOR ANY CONSTRUCTION WHERE, WITHIN THE PROJECT LIMITS, AN ALLEY APRON IS ENCOUNTERED, THE ASSOCIATED CURB RAMPS, ALLEY APRON, AND SIDEWALKS MUST BE IMPROVED TO CURRENT ADA STANDARDS IF THEY ARE NOT COMPLIANT (SEE APPENDIX A).

II. SIDEWALK INSTALLATION / REPAIRS / RECONSTRUCTION

THE LIMITS OF ANY MAINLINE SIDEWALK REPLACEMENT, GREATER THAN TEN FEET (10') IN LENGTH, THAT ABUT AN EXISTING RAMP, KEYSTONE, TRANSITION PANEL, AND/OR LANDING AREA (THIS TOTAL LENGTH INCLUDES THE PRIOR ELEMENTS), SHALL BE EXTENDED TO INCLUDE THE AFFECTED RAMPS AND THESE RAMPS SHALL BE RECONSTRUCTED TO CURRENT ADA STANDARDS. IN ADDITION, ALL NEWLY PLACED SIDEWALK TEN FEET (10') OR MORE IN LENGTH SHALL BE CONSTRUCTED IN ACCORDANCE WITH ALL CURRENT APPLICABLE STANDARDS WHICH INCLUDE PROVIDING A MINIMUM FOUR FEET (4') WIDTH ACCESSIBLE PATHWAY WITH A CROSS SLOPE NOT TO EXCEED 1:64 (SEE APPENDIX A).

III. GUIDELINES FOR TRANSITIONING TO EXISTING NON-COMPLIANT CONDITION

NEW SIDEWALK PLACEMENTS GREATER THAN TEN FEET IN CONTIGUOUS LENGTH

THE LIMITS OF ANY MAINLINE SIDEWALK REPLACEMENT, GREATER THAN TEN FEET (10') IN LENGTH, MUST BE EXTENDED FOR A MINIMUM FIVE ADDITIONAL FEET (5') EITHER SIDE IN ORDER TO PROVIDE A TRANSITION TO MATCH THE EXISTING SIDEWALK. THE LENGTH OF TRANSITION SHALL BE LENGTHENED AS NECESSARY TO ENSURE THAT THE RUNNING SLOPE OF THE TRANSITION DOES NOT EXCEED A SLOPE OF 1:24 (PREFERRED) OR 1:14 (MAXIMUM) AT ANY POINT.

NEW SIDEWALK REPLACEMENTS TEN FEET OR LESS IN CONTIGUOUS LENGTH (REPAIRS)

IT IS ACCEPTABLE PRACTICE TO MATCH ADJACENT SIDEWALKS AT THE EXISTING SLOPE.

CURB RAMP REPLACEMENTS

WHEN REPLACING AN ADA RAMP, THE SIDEWALK REPLACEMENT MUST EXTEND BEYOND THE LIMITS OF THE LANDING AREA AND/OR THE "KEYSTONE" A MINIMUM OF AN ADDITIONAL FIVE FEET (5') ON EITHER SIDE IN ORDER TO PROVIDE A TRANSITION TO MATCH THE EXISTING SIDEWALK. THE TRANSITION PANEL SHALL BE LENGTHENED AS NECESSARY TO ENSURE THAT THE RUNNING SLOPE OF THE TRANSITION PANEL DOES NOT EXCEED A SLOPE OF 1:24 (PREFERRED) OR 1:14 (MAXIMUM) AT ANY POINT.

NO EXCEPTIONS TO THE ABOVE WILL BE ALLOWED WITHOUT WRITTEN APPROVAL FROM THE COMMISSIONER.

DATE	REVISION
02/20/07	REVISION 1
11/15/07	REVISION 2
11/14/08	REVISION 3
11/02/09	REVISION 4
08/10/12	REVISION 5
01/01/14	REVISION 6

City of Chicago — Rahm Emanuel, Mayor — Department of Transportation — Commissioner — Gabe Klein — www.cityofchicago.org — CDOT

SCALE: NOT TO SCALE
DATE: 10/23/2006

CITY OF CHICAGO
ADA COMPLIANCE AND TRANSITION GUIDELINES
SHEET B-3-4

DRAWN BY: CDOT
CHECKED BY: GK

STRAIGHT DETECTABLE WARNING UNITS

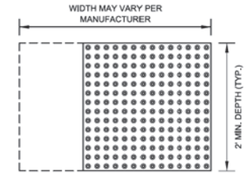

RADIAL DETECTABLE WARNING UNITS

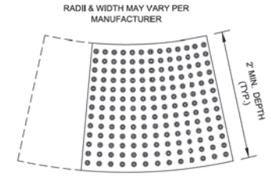

DETECTABLE WARNING UNIT SIZES

- VERIFY ALL DIMENSIONS WITH THE PRODUCT MANUFACTURER.
- IF USING RADIAL UNITS, VERIFY THAT THE CURB RADIUS MATCHES AVAILABLE UNIT RADII WITH THE PRODUCT MANUFACTURER.
- APPROVED LIST OF DETECTABLE WARNING PRODUCTS CAN BE FOUND ON CDOT'S WEBSITE (www.cityofchicago.org).

DATE	REVISION
02/20/07	REVISION 1
11/15/07	REVISION 2
11/14/08	REVISION 3
11/02/09	REVISION 4
08/10/12	REVISION 5

City of Chicago — Rahm Emanuel, Mayor — Department of Transportation — Commissioner — Gabe Klein — www.cityofchicago.org — CDOT

SCALE: NOT TO SCALE
DATE: 10/23/2006

CITY OF CHICAGO
DETECTABLE WARNING UNIT SIZES
SHEET B-4-1

DRAWN BY: CDOT
CHECKED BY: LGM

GENERAL NOTE:
THE ROWS OF DOMES IN THE DETECTABLE WARNING MATERIAL MUST BE ALIGNED WITH THE PATH OF WHEELCHAIR TRAVEL WHICH IS REQUIRED TO BE PERPENDICULAR TO THE GRADE BREAK AT THE BOTTOM OF THE RAMP TO PERMIT TRACKING BETWEEN DOME ROWS. ON BLENDED TRANSITIONS OR FLUSH TRANSITIONS, WHERE RADIAL UNITS ARE SITUATED ABOUT THE CURB RADIUS, DOME ORIENTATION IS NOT SIGNIFICANT.

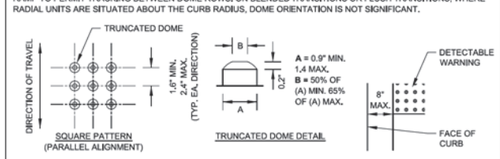

UNIT PATTERN & DOME DETAIL

TYPICAL DETECTABLE WARNING PLACEMENT

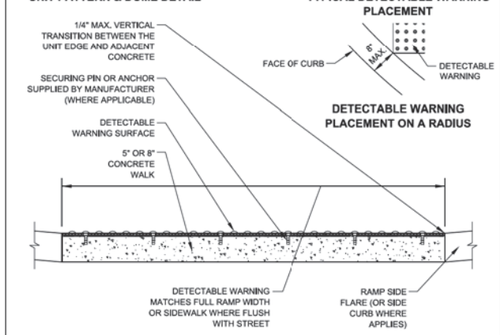

DETECTABLE WARNING UNIT SECTION

DATE	REVISION
02/20/07	REVISION 1
11/15/07	REVISION 2
11/14/08	REVISION 3
11/02/09	REVISION 4
08/10/12	REVISION 5

City of Chicago — Rahm Emanuel, Mayor — Department of Transportation — Commissioner — Gabe Klein — www.cityofchicago.org — CDOT

SCALE: NOT TO SCALE
DATE: 10/23/2006

CITY OF CHICAGO
DETECTABLE WARNING UNIT DETAILS
SHEET B-4-2

DRAWN BY: CDOT
CHECKED BY: LGM

DESIGN BY:	YA		01/27/2020	ISSUE FOR BID	YA	YMD	EJL		
DRAWN BY:	ML		10/04/2019	ISSUE FOR OUC EFP	CJB	YMD	EJL		
CHECKED BY:	EJL		06/14/2019	ISSUE FOR 100% DESIGN	LAB	YMD	EJL		
APPROVED BY:	EJL		06/14/2019	ISSUE FOR PERMIT	LAB	YMD	EJL		
CDOT/APPROVED BY:		NO.	DATE	REVISIONS	DES.	DRW.	CHK.	DCCO	CDOT

MILHOUSE
333 South Wabash Avenue
Suite 2901
Chicago, IL 60604
t 312.994.8701
f 312.987.0071
www.mlhouseinc.com

PERKINS+WILL
The Wrigley Building
410 North Michigan Ave.
Suite 1600
Chicago, IL 60611
t 312.755.0770
f 312.755.0775
www.perkinswill.com

CDOT
CHICAGO DEPARTMENT OF TRANSPORTATION
DIVISION OF ENGINEERING

154 N DAMEN AVE - DAMEN GREEN LINE STATION

ADA DETAILS

CDOT PROJECT D-7-135

DATE: 01/27/2020

SPEC. NO.

DRAWING NO.
C51-03

REVISION NO.

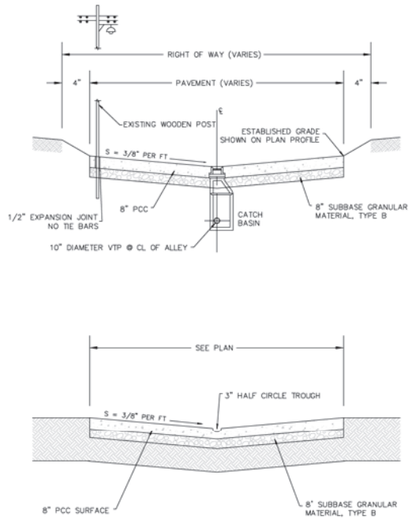

CDOT CHICAGO DEPARTMENT OF TRANSPORTATION	DATE	REVISION	CITY OF CHICAGO
	1/1/2014	REVISION 1	STANDARD ALLEY SECTION
			DATE 12/12/06 · SHEET A-1-2 · DRAWN BY CDOT

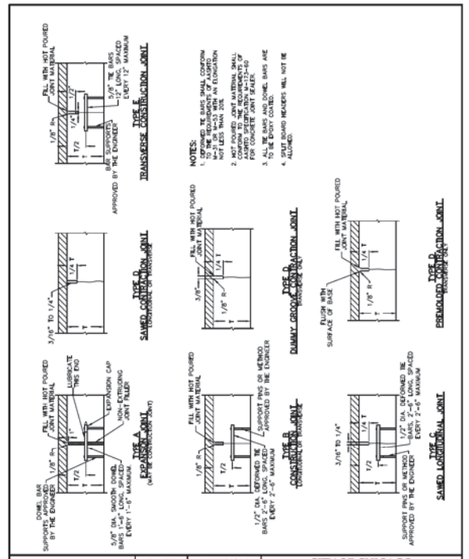

CDOT CHICAGO DEPARTMENT OF TRANSPORTATION	DATE	REVISION	CITY OF CHICAGO
	1/1/2014	REVISION 1	P.C.C. BASE COURSE JOINT DETAILS
			DATE 12/27/06 · SHEET A-2-3C · DRAWN BY CDOT

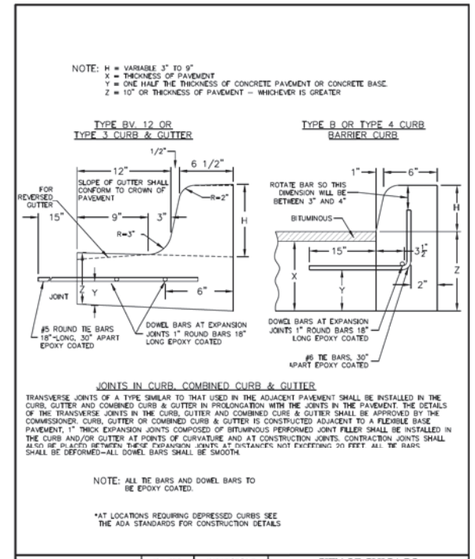

CDOT CHICAGO DEPARTMENT OF TRANSPORTATION	DATE	REVISION	CITY OF CHICAGO
	1/1/2014	REVISION 1	CONCRETE CURB & GUTTER DETAIL
			DATE 12/12/06 · SHEET A-2-6 · DRAWN BY CDOT

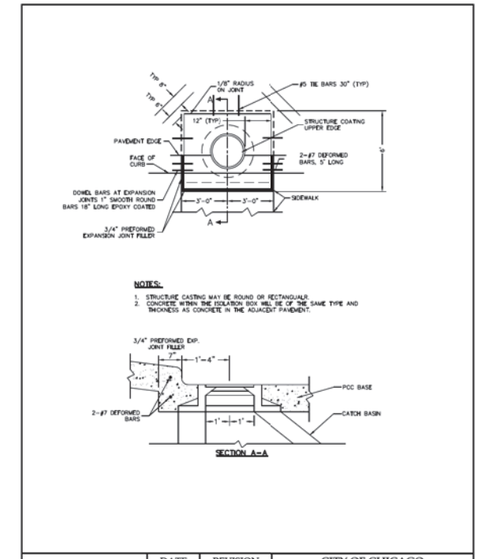

CDOT CHICAGO DEPARTMENT OF TRANSPORTATION	DATE	REVISION	CITY OF CHICAGO
	1/1/2014	REVISION 1	DETAILS OF STRUCTURE CASTING ISOLATION BOX FOR P.C.C. PAVEMENT AND BASE COURSE
			DATE 12/22/06 · SHEET A-2-10B · DRAWN BY CDOT

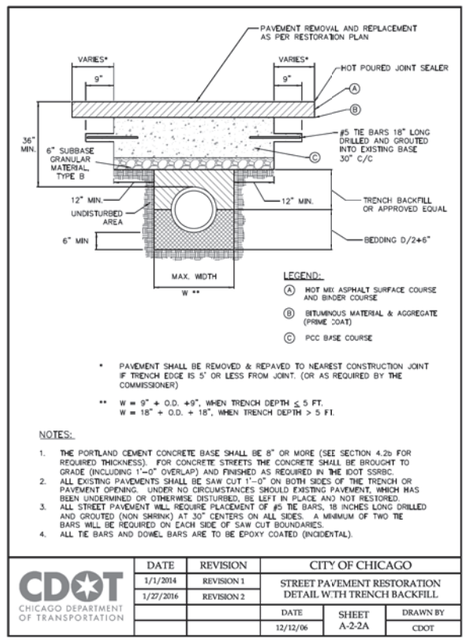

CDOT CHICAGO DEPARTMENT OF TRANSPORTATION	DATE	REVISION	CITY OF CHICAGO
	1/1/2014	REVISION 1	STREET PAVEMENT RESTORATION DETAIL WTH TRENCH BACKFILL
	1/27/2016	REVISION 2	
			DATE 12/12/06 · SHEET A-2-2A · DRAWN BY CDOT

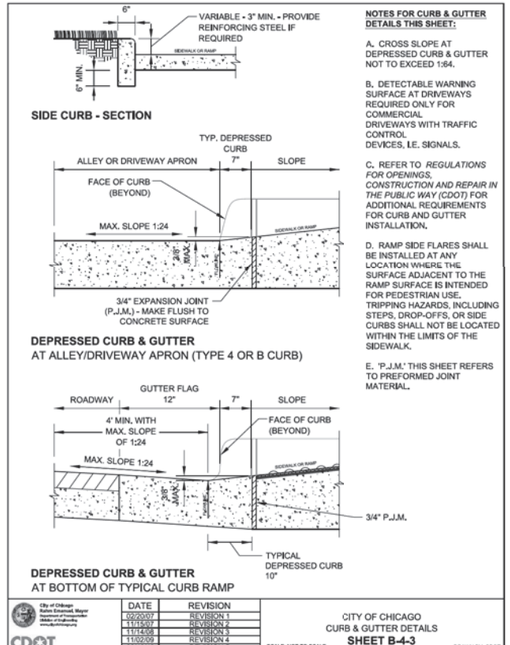

City of Chicago Rahm Emanuel, Mayor Department of Transportation Gabe Klein, Commissioner www.cityofchicago.org	DATE	REVISION	CITY OF CHICAGO CURB & GUTTER DETAILS SHEET B-4-3
CDOT CHICAGO DEPARTMENT OF TRANSPORTATION	02/20/07	REVISION 1	SCALE: NOT TO SCALE · DATE: 10/23/2006 · DRAWN BY: CDOT · CHECKED BY: LCM
	11/15/07	REVISION 2	
	11/14/08	REVISION 3	
	11/02/09	REVISION 4	
	08/10/12	REVISION 5	

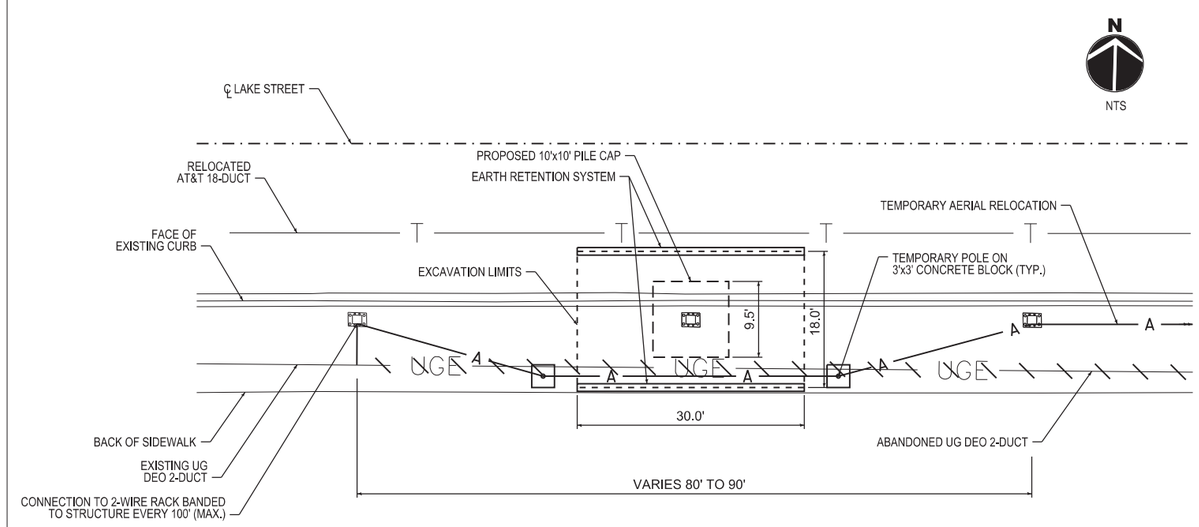

TEMPORARY DEO SUPPORT DETAIL

COORDINATE WITH CDOT - DEO

DESIGN BY:	YA		01/27/2020	ISSUE FOR BID	YA	YMD	EJL		
DRAWN BY:	ML		10/04/2019	ISSUE FOR OUC EFP	CJB	YMD	EJL		
CHECKED BY:	EJL		06/14/2019	ISSUE FOR 100% DESIGN	LAB	YMD	EJL		
APPROVED BY:	EJL		06/14/2019	ISSUE FOR PERMIT	LAB	YMD	EJL		
CDOT/APPROVED BY:		NO.	DATE	REVISIONS	DES.	DRW.	CHK.	DCCO	CDOT

MILHOUSE
333 South Wabash Avenue
Suite 2901
Chicago, IL 60604
t 312.994.8701
f 312.987.0071
www.milhouseinc.com

PERKINS+WILL
The Wrigley Building
410 North Michigan Ave.
Suite 1600
Chicago, IL 60611
t 312.755.0770
f 312.755.0775
www.perkinswill.com

CDOT CHICAGO DEPARTMENT OF TRANSPORTATION
DIVISION OF ENGINEERING

154 N DAMEN AVE - DAMEN GREEN LINE STATION

CIVIL DETAILS

CDOT PROJECT D-7-135 · DATE: 01/27/2020

SPEC. NO. · DRAWING NO. C51-04 · REVISION NO.

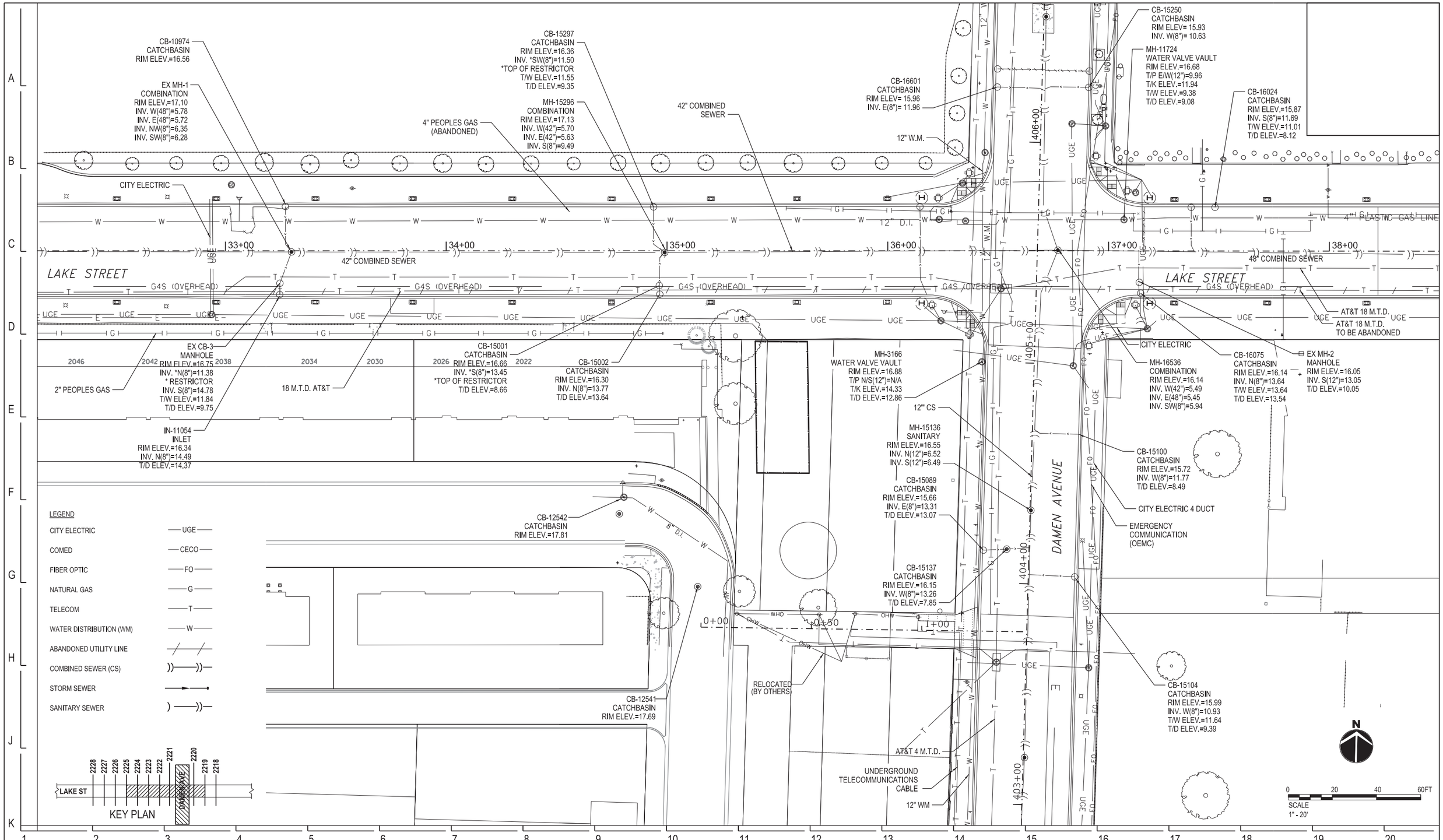

DESIGN BY:	YA		01/27/2020	ISSUE FOR BID	YA	YMD	EJL		
DRAWN BY:	ML		10/04/2019	ISSUE FOR OUC EFP	CJB	YMD	EJL		
CHECKED BY:	EJL		06/14/2019	ISSUE FOR 100% DESIGN	LAB	YMD	EJL		
APPROVED BY:	EJL		06/14/2019	ISSUE FOR PERMIT	LAB	YMD	EJL		
CDOT/APPROVED BY:		NO.	DATE	REVISIONS	DES.	DRW.	CHK.	DCCO	CDOT

MILHOUSE
333 South Wabash Avenue
Suite 2901
Chicago, IL 60604
t 312.994.8701
f 312.987.0071
www.milhouseinc.com

PERKINS+WILL
The Wrigley Building
410 North Michigan Ave.
Suite 1600
Chicago, IL 60611
t 312.755.0770
f 312.755.0775
www.perkinswill.com

CDOT
CHICAGO DEPARTMENT OF TRANSPORTATION
DIVISION OF ENGINEERING

154 N DAMEN AVE - DAMEN GREEN LINE STATION

EXISTING DRAINAGE CONDITIONS

CDOT PROJECT D-7-135

DATE: 01/27/2020

SPEC. NO.

DRAWING NO. C60-01

REVISION NO.

CONTRACTOR TO TELEVISE EXIST. 42" COMBINED SEWER FROM MH @ STA. 31+63 TO MH @ ST. 36+77 (SEE NOTE 4)

CONTRACTOR TO TELEVISE EXIST. 48" COMBINED SEWER FROM MH @ STA. 36+77 TO MH @ ST. 40+07 (SEE NOTE 4)

SEE NOTE 3

PR CB-10

PROP. SHUT OFF WATER VALVE STA. 35+53.12, 25.53' RT

2" WATER MAIN TAP CONNECT TO EX. 12" SEE NOTES 1 & 2 (BY CDWM) STA. 35+53.12 , 14.03' LT

2" WATER SERVICE RELOCATION - 59 LF (NO HORIZONTAL BENDS IN ROW)

CONNECT TO EXISTING 42" COMBINED SEWER INV. EL.=8.11 (8")

2" GAS SERVICE RELOCATION - 41 LF (BY OTHERS)

EX CB-2

EX CE-2

ADJ

PR CB-8

P-20 25 LF 8" DIP

LAKE STREET

33+00

34+00

35+00

36+00

37+00

38+00

P-22 22 LF 8" DIP

P-21 20 LF 8" DIP

P-24 8 LF 8" ESVCP

P-23 21 LF 6" DIP

PR CB-11

EX MH-1

EX CB-3

TO BE FILLED

EX MH-2

P-7

G4S (OVERHEAD)

PR MH-1

EX CE-1

P-19, 6 LF 8" ESVCP CONNECT TO EXISTING LATERAL

PR CB-7

2-DUCT DIVERSION AT STAIR FOUNDATION

2-DUCT DEO TEMPORARY SUPPORT & RE-PLACE SEE SHEET C-51-04 FOR DETAIL

IRON FENCE

PR CB-9

P-11

EX CE-3

PR CB-4

EX WV

406+00

405+00

404+00

403+00

N. DAMEN AVENUE

EX CB-1 TO BE FILLED

5'-0"

2-DUCT DIVERSION AT STAIR FOUNDATION

2-DUCT DEO TEMPORARY SUPPORT & RE-PLACE

BRICK BUILDING

WATER METER VAULT

LOT 22

CO-2

P-4

P-3

PR CB-3

PR CB-2

LOT 23

P-1

CO-1

P-2

PR CB-1

4 STORY BRICK BUILDING

1 STORY BRICK BUILDING

8" D.I.P CONSTRUCTED TO WATER MAIN STANDARDS

BLIND CONNECTION

2 STORY BRICK BUILDING

LOT 25

4' IRON FENCE

0+00

0+50

1+00

PR CB-5

RELOCATE W.O.W. POWER/FIBER 2 DUCT (BY OTHERS)

P-12

VERTICAL SEPERATION BETWEEN TOP OF EXISTING 12" D.I.P WATER MAIN AND THE BOTTOM OF PROPOSED 8" SANITARY PIPE IS 1.84 FT.

CB-12541 CATCHBASIN RIM ELEV.=17.69

N. SEELEY AVENUE

PUBLIC ALLEY

NOTE:

1) THE CONTRACTOR MUST COORDINATE WITH THE CHICAGO DEPARTMENT OF WATER MANAGEMENT TO DETERMINE IF PRESSURE CONNECTIONS WILL BE REQUIRED FOR BUILDING WATER SERVICES REROUTES. IF PRESSURE CONNECTIONS ARE REQUIRED, THE CONTRACTOR MUST PROVIDE ANY ADDITIONAL VALVES AND/OR MATERIALS AT NO ADDITIONAL COST TO THE CONTRACT.

2) IF PRESSURE CONNECTION IS REQUIRED FOR THE WATER MAIN, THE CONTRACTOR MAY COORDINATE A BUILDING SERVICE SHUTDOWN, THROUGH THE OWNER, TO ELIMINATE A SECOND PRESSURE CONNECTION AT THE BUILDING SERVICE.

3) THE PROPOSED 2-INCH WATER SERVICE ON THE SOUTHERN FRONTAGE OF W LAKE STREET MUST MAINTAIN PERPENDICULAR TO THE 12-INCH WATER MAIN ON LAKE STREET.

4) THE CONTRACTOR IS REQUIRED TO CONDUCT A RECONSTRUCTION VIDEOTAPED INSPECTION FROM STA. 31+63 TO STA. 40+07 ON LAKE STREET . PRIOR TO THE ISSUANCE OF A SEWER PERMIT AND A POST-CONSTRUCTION VIDEOTAPED INSPECTION PRIOR TO THE ACCEPTANCE OF THE SEWER. THE VIDEOTAPE MUST BE SUBMITTED TO THE SEWER UNIT OF THE DEPARTMENT OF WATER MANAGEMENT FOR REVIEW AND APPROVAL.

LEGEND

CITY ELECTRIC	UGE
COMED	CECO
FIBER OPTIC	FO
NATURAL GAS	G
TELECOM	T
WATER DISTRIBUTION (WM)	W
ABANDONED UTILITY LINE	
COMBINED SEWER (CS)	
STORM SEWER	
SANITARY SEWER	

2228 2227 2226 2225 2224 2223 2222 2221 2220 2219 2218

LAKE ST

DAMEN AVE

KEY PLAN

N

0 20 40 60FT

SCALE 1" - 20'

DESIGN BY:	YA		01/27/2020	ISSUE FOR BID	YA	YMD	EJL		
DRAWN BY:	ML		10/04/2019	ISSUE FOR OUC EFP	CJB	YMD	EJL		
CHECKED BY:	EJL		06/14/2019	ISSUE FOR 100% DESIGN	LAB	YMD	EJL		
APPROVED BY:	EJL		06/14/2019	ISSUE FOR PERMIT	LAB	YMD	EJL		
CDOT/APPROVED BY:		NO.	DATE	REVISIONS	DES.	DRW.	CHK.	DCCO	CDOT

MILHOUSE
333 South Wabash Avenue
Suite 2901
Chicago, IL 60604
t 312.994.8701
f 312.987.0071
www.milhouseinc.com

PERKINS+WILL
The Wrigley Building
410 North Michigan Ave.
Suite 1600
Chicago, IL 60611
t 312.755.0770
f 312.755.0775
www.perkinswill.com

CDOT
CHICAGO DEPARTMENT OF TRANSPORTATION
DIVISION OF ENGINEERING

154 N DAMEN AVE - DAMEN GREEN LINE STATION

PROPOSED DRAINAGE & UTILITY CONDITIONS

CDOT PROJECT D-7-135

DATE: 01/27/2020

SPEC. NO.

DRAWING NO. C60-02

REVISION NO.

NOTE:

1) THE CONTRACTOR MUST COORDINATE WITH THE CHICAGO DEPARTMENT OF WATER MANAGEMENT TO DETERMINE IF PRESSURE CONNECTIONS WILL BE REQUIRED FOR BUILDING WATER SERVICES REROUTES. IF PRESSURE CONNECTIONS ARE REQUIRED, THE CONTRACTOR MUST PROVIDE ANY ADDITIONAL VALVES AND/OR MATERIALS AT NO ADDITIONAL COST TO THE CONTRACT.

2) IF PRESSURE CONNECTION IS REQUIRED FOR THE WATER MAIN, THE CONTRACTOR MAY COORDINATE A BUILDING SERVICE SHUTDOWN, THROUGH THE OWNER, TO ELIMINATE A SECOND PRESSURE CONNECTION AT THE BUILDING SERVICE.

3) FOR INSPECTION MANHOLE, CONTRACTOR TO PROVIDE CIRCULAR OPENING IN REINFORCED BOX CULVERT AND IDOT TYPE 1 FRAME AND GRATE (CLOSED LID), AND CONCRETE ADJUSTMENT RINGS AS NEEDED TO MATCH PROPOSED RIM ELEVATION. NO PRECAST CONCRETE MANHOLE STRUCTURE REQUIRED. LOCATE OPENING SUCH THAT IT IS ADJACENT TO CULVERT SIDE WALL, AND INSTALL IDOT MANHOLE STEPS ON BOX CULVERT WALL, FROM TOP TO BOTTOM.

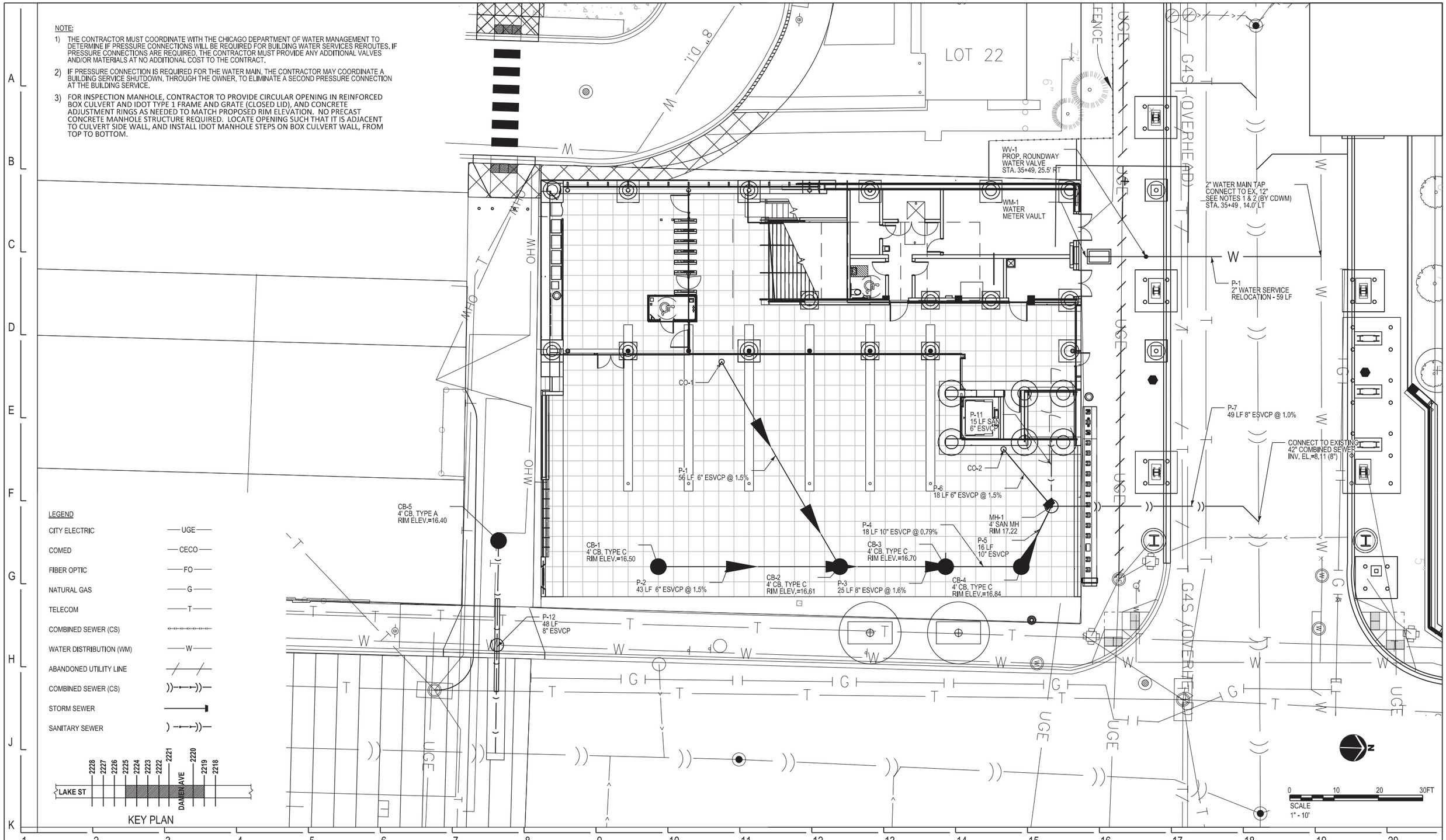

DESIGN BY:	YA		01/27/2020	ISSUE FOR BID	YA	YMD	EJL		
DRAWN BY:	ML		10/04/2019	ISSUE FOR OUC EFP	CJB	YMD	EJL		
CHECKED BY:	EJL		06/14/2019	ISSUE FOR 100% DESIGN	LAB	YMD	EJL		
APPROVED BY:	EJL		06/14/2019	ISSUE FOR PERMIT	LAB	YMD	EJL		
CDOT/APPROVED BY:		NO.	DATE	REVISIONS	DES.	DRW.	CHK.	DCCO	CDOT

MILHOUSE
333 South Wabash Avenue
Suite 2901
Chicago, IL 60604
t 312.994.8701
f 312.987.0071
www.milhouseinc.com

PERKINS+WILL
The Wrigley Building
410 North Michigan Ave.
Suite 1600
Chicago, IL 60611
t 312.755.0770
f 312.755.0775
www.perkinswill.com

CDOT
CHICAGO DEPARTMENT OF TRANSPORTATION
DIVISION OF ENGINEERING

154 N DAMEN AVE - DAMEN GREEN LINE STATION

PROPOSED DRAINAGE & UTILITY CONDITIONS

CDOT PROJECT D-7-135

DATE: 01/27/2020

SPEC. NO.

DRAWING NO. C60-03

REVISION NO.

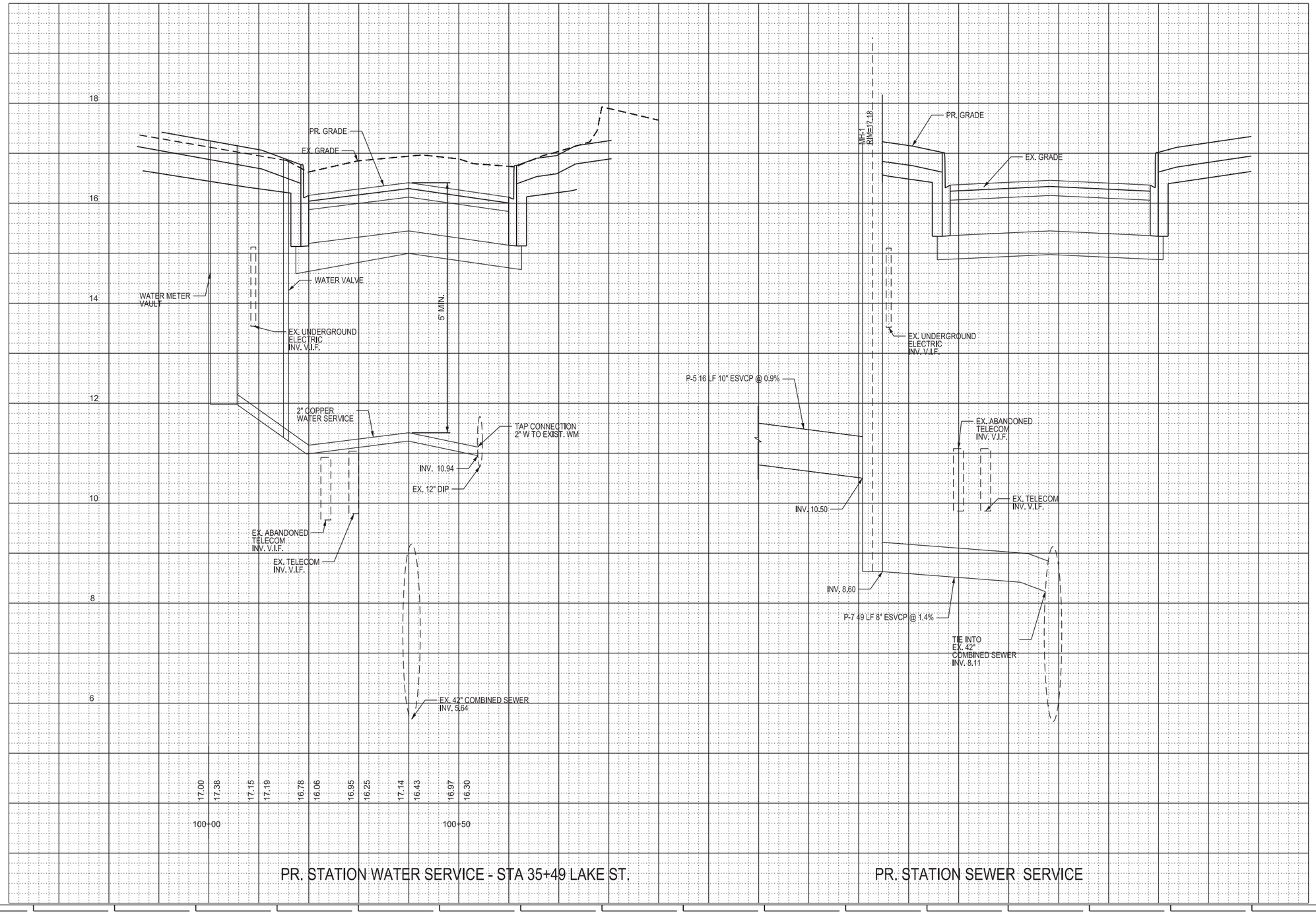

DESIGN BY:	YA		01/27/2020	ISSUE FOR BID	YA	YMD	EJL		
DRAWN BY:	ML		10/04/2019	ISSUE FOR OUC EFP	CJB	YMD	EJL		
CHECKED BY:	EJL		06/14/2019	ISSUE FOR 100% DESIGN	LAB	YMD	EJL		
APPROVED BY:	EJL		06/14/2019	ISSUE FOR PERMIT	LAB	YMD	EJL		
CDOT/APPROVED BY:		NO.	DATE	REVISIONS	DES.	DRW.	CHK.	DCCO	CDOT

MILHOUSE
333 South Wabash Avenue
Suite 2901
Chicago, IL 60604
t 312.994.8701
f 312.987.0071
www.milhouseinc.com

PERKINS+WILL
The Wrigley Building
410 North Michigan Ave.
Suite 1600
Chicago, IL 60611
t 312.755.0770
f 312.755.0775
www.perkinswill.com

CDOT
CHICAGO DEPARTMENT OF TRANSPORTATION
DIVISION OF ENGINEERING

154 N DAMEN AVE - DAMEN GREEN LINE STATION

PROPOSED UTILITY PROFILE

CDOT PROJECT D-7-135

DATE: 01/27/2020

SPEC. NO.

DRAWING NO. C60-04

REVISION NO.

PROPOSED PIPE SCHEDULE

PIPE NO.	STRUCTURE FROM	TO STRUCTURE	DIAMETER (IN)	TYPE	SLOPE (%)	LENGTH (FT)	TRENCH BACKFILL (CY)
P-1	CO-1	CB-2	6	ESVCP	1.50	56	16
P-2	CB-1	CB-2	6	ESVCP	1.50	43	13
P-3	CB-2	CB-3	8	ESVCP	1.60	25	9
P-4	CB-3	CB-4	10	ESVCP	0.79	18	12
P-5	CB-4	MH-1	10	ESVCP	0.90	16	11
P-6	CO-2	MH-1	6	ESVCP	1.50	18	5
P-7	MH-1	EX. COMB SEWER	10	ESVCP	1.40	49	43
P-11	Building	MH-1	6	ESVCP	1.00	15	11
P-12	CB-5	EX. COMB SEWER	10	ESVCP	1.00	48	43
P-19	PR CB-7	EX. SEWER	8	ESVCP	1.00	8	8
P-20	PR CB-8	EX. MH-1	8	DIP	1.00	21	22
P-21	PR CB-9	EX. COMB SEWER	8	DIP	1.00	20	21
P-22	PR CB-10	EX. COMB SEWER	8	DIP	1.00	22	23
P-23	PR CB-11	EX. COMB SEWER	8	DIP	1.00	21	22
P-24	EX. CB	EX. CB	8	ESVCP	1.00	8	8

PROPOSED STRUCTURE SCHEDULE

STRUCTURE NO.	STATION	OFFSET	NORTHING	EASTING	DIA./TYPE*	FRAME & GRATE	OPEN/CLOSED LID	RIM ELEV.	FRAME & GRATE	N	S	E	W	REMARKS
PR CB-1	36+21.25	135.74' RT	1901222.88	1163003.98	4' CB TYPE C	ADA	OPEN	16.50	ADA	11.83				
PR CB-2	36+21.25	94.73' RT	1901263.82	1163001.66	4' CB TYPE C	ADA	OPEN	16.61	ADA	11.18	11.18		11.18	
PR CB-3	36+21.25	70.82' RT	1901287.69	1163000.31	4' CB TYPE C	ADA	OPEN	16.70	ADA	10.78	10.78	10.78	10.78	
PR CB-4	36+21.25	53.74' RT	1901304.75	1162999.34	4' CB TYPE C	ADA	OPEN	16.84	ADA	10.64	10.64		10.64	
PR CB-5	36+15.37	171.85' RT	1901186.49	1163000.15	4' CB TYPE A	ADA	OPEN	16.40	ADA			12.4		D/S INV. AT EX. SEWER 6.81
PR MH-1	36+07.68	46.83' RT	1901310.80	1162985.31	4' IDOT STD	CHICAGO STD	CLOSED	17.18	CHICAGO STD	8.6	10.5	12.02	12.13 (SW)	
CO-1	35+74.96	121.44' RT	1901234.54	1162956.95	CLEAN OUT			17.35						
CO-2	35+94.75	57.73' RT	1901299.26	1162973.10	CLEAN OUT			17.35		12.40 (NE)				
PR CB-7	33+24.59	19.72' RT	1901321.87	1162701.22	4' CB TYPE A	TYPE 1 F	OPEN	16.02	TYPE 1 F	13.90				
PR CB-8	33+27.00	19.54' LT	1901361.78	1162701.59	4' CB TYPE A	TYPE 1 F	OPEN	16.13	TYPE 1 F		10.74			
PR CB-9	35+12.00	20.00' RT	1901373.09	1162902.06	4' CB TYPE A	TYPE 1 F	OPEN	15.96	TYPE 1 F	12.96				
PR CB-10	35+28.00	20.00' LT	1901331.74	1162873.09	4' CB TYPE A	TYPE 1 F	OPEN	15.99	TYPE 1 F		12.99			
PR CB-11	37+46.28	19.94' RT	1901345.54	1163122.15	4' CB TYPE A	TYPE 1 F	OPEN	15.88	TYPE 1 F					
EX CB-2	37+48.19	19.78' LT	1901383.66	1163089.91	EXISTING	REUSE EXISTING		15.87	REUSE EXISTING					PROTECT IN PLACE
EX MH-1	33+29.95	0.48' RT	1901341.43	1162705.48	EXISTING	REUSE EXISTING		16.63	REUSE EXISTING					RIM TO BE ADJ.
EX MH-2	37+13.90	14.21' RT	1901349.43	1163089.59	EXISTING	REUSE EXISTING		16.15	REUSE EXISTING					PROTECT IN PLACE
EX CB-3	33+24.69	14.67' RT	1901326.96	1162701.04	EXISTING	REUSE EXISTING		16.22	REUSE EXISTING					RIM TO BE ADJ.
WV-1	36+43.09	50.18 RT	1901328.80	1162925.28	WATER VALVE									
WM-1	35+51.17	36.05 RT	1901318.44	1162928.37	WATER METER									
EX WV-1	36+43.09	50.18' RT	1901309.54	1163020.94	WATER STRUCTURE	REUSE EXISTING		16.81	REUSE EXISTING					RIM TO BE ADJ.
EX CE-1	32+93.86	28.86' RT	1901311.05	1162671.06	EX. ELEC MH	REUSE EXISTING		17.21	REUSE EXISTING					RIM TO BE ADJ.
EX CE-2	33+02.60	29.91' LT	1901370.25	1162676.58	EX. ELEC MH	REUSE EXISTING		17.04	REUSE EXISTING					RIM TO BE ADJ.
EX CE-3	36+24.08	31.65 RT	1901326.96	1163000.90	EX. ELEC MH	REUSE EXISTING		16.81	REUSE EXISTING					RIM TO BE ADJ.

DESIGN BY:	YA		01/27/2020	ISSUE FOR BID	YA	YMD	EJL		
DRAWN BY:	ML		10/04/2019	ISSUE FOR OUC EFP	CJB	YMD	EJL		
CHECKED BY:	EJL		06/14/2019	ISSUE FOR 100% DESIGN	LAB	YMD	EJL		
APPROVED BY:	EJL		06/14/2019	ISSUE FOR PERMIT	LAB	YMD	EJL		
CDOT/APPROVED BY:		NO.	DATE	REVISIONS	DES.	DRW.	CHK.	DCCO	CDOT

MILHOUSE
333 South Wabash Avenue
Suite 2901
Chicago, IL 60604
t 312.994.8701
f 312.987.0071
www.milhouseinc.com

PERKINS+WILL
The Wrigley Building
410 North Michigan Ave.
Suite 1600
Chicago, IL 60611
t 312.755.0770
f 312.755.0775
www.perkinswill.com

CDOT
CHICAGO DEPARTMENT OF TRANSPORTATION
DIVISION OF ENGINEERING

154 N DAMEN AVE - DAMEN GREEN LINE STATION

PROPOSED UTILITY SCHEDULE

CDOT PROJECT D-7-135

DATE: 01/27/2020

SPEC. NO.

DRAWING NO. C60-05

REVISION NO.

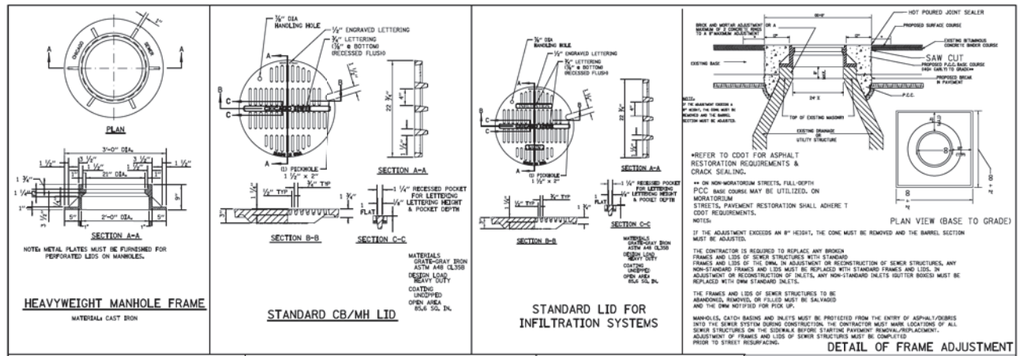

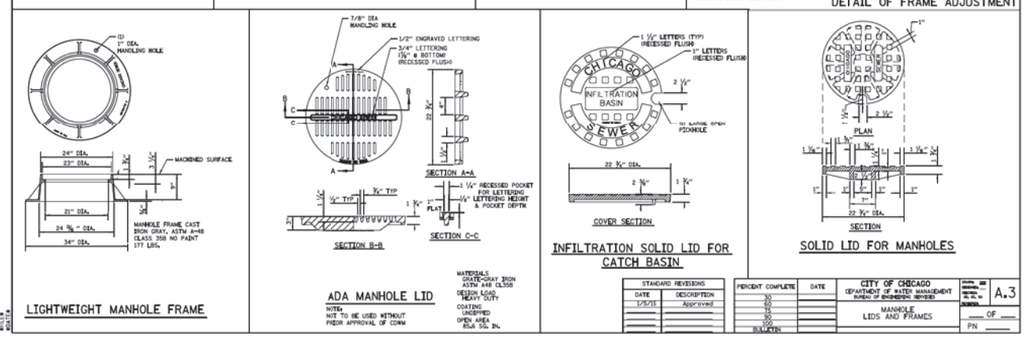

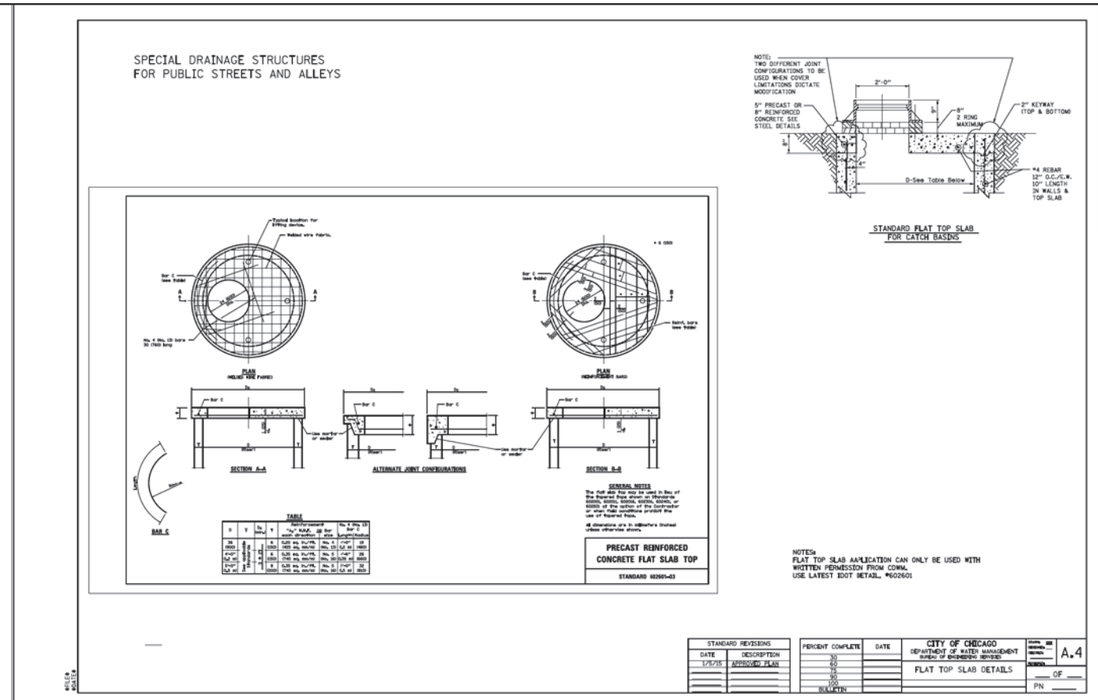

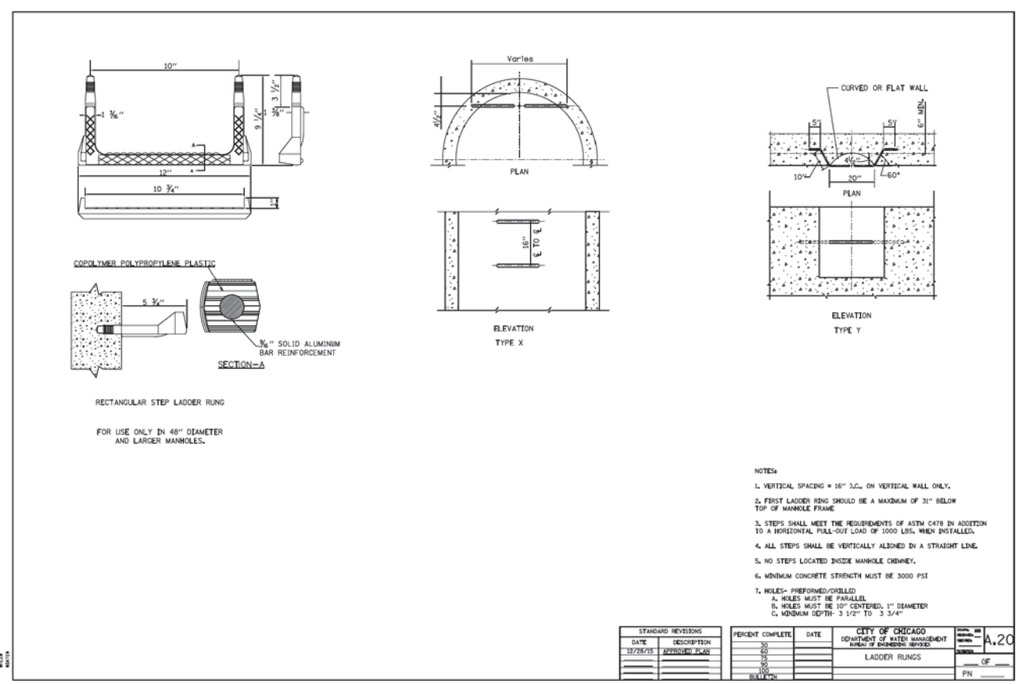

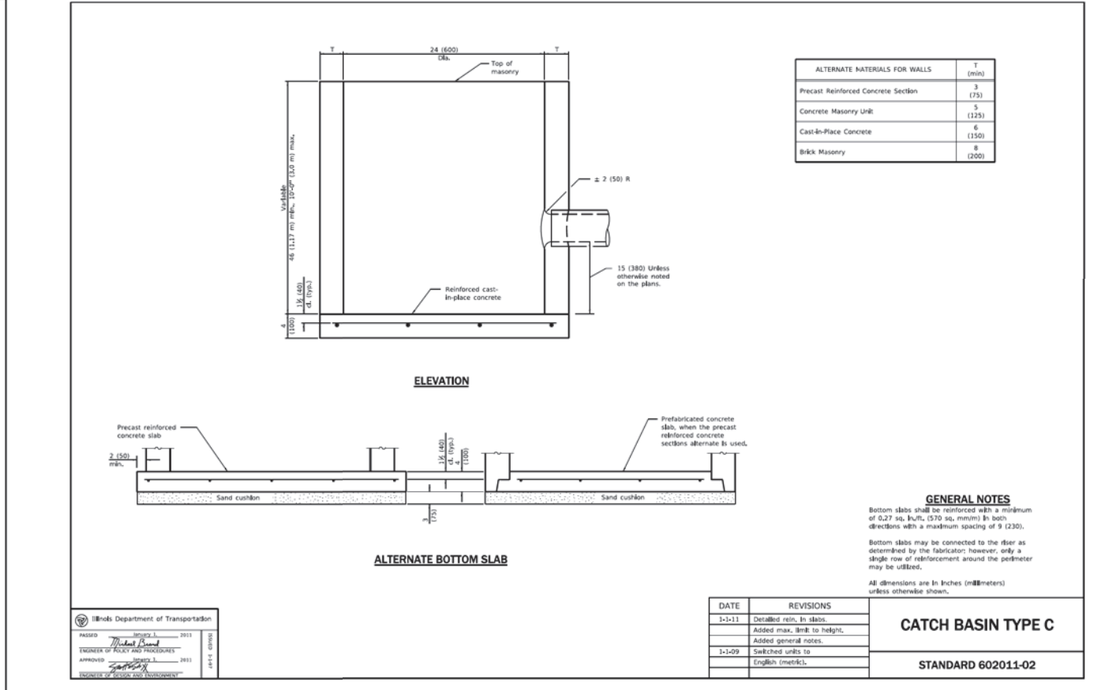

DESIGN BY:	YA		01/27/2020	ISSUE FOR BID	YA	YMD	EJL		
DRAWN BY:	ML		10/04/2019	ISSUE FOR OUC EFP	CJB	YMD	EJL		
CHECKED BY:	EJL		06/14/2019	ISSUE FOR 100% DESIGN	LAB	YMD	EJL		
APPROVED BY:	EJL		06/14/2019	ISSUE FOR PERMIT	LAB	YMD	EJL		
CDOT/APPROVED BY:		NO.	DATE	REVISIONS	DES.	DRW.	CHK.	DCCO	CDOT

MILHOUSE
333 South Wabash Avenue
Suite 2901
Chicago, IL 60604
t 312.994.8701
f 312.987.0071
www.milhouseinc.com

PERKINS+WILL
The Wrigley Building
410 North Michigan Ave.
Suite 1600
Chicago, IL 60611
t 312.755.0770
f 312.755.0775
www.perkinswill.com

CDOT
CHICAGO DEPARTMENT OF TRANSPORTATION
DIVISION OF ENGINEERING

154 N DAMEN AVE - DAMEN GREEN LINE STATION

DRAINAGE DETAILS

CDOT PROJECT D-7-135 | DATE: 01/27/2020

SPEC. NO.

DRAWING NO. C61-01

REVISION NO.

A.1

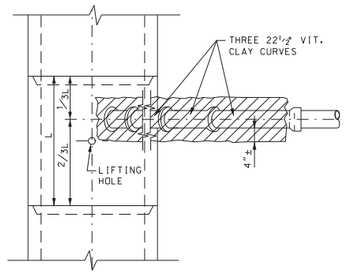

PLAN

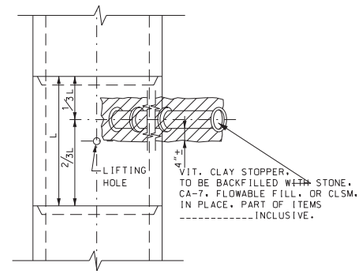

PLAN

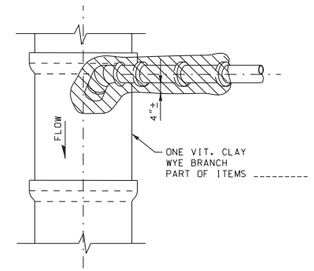

PLAN

NOTE:
PLUG TO BE COATED WITH MORTAR AND DRIVEN INTO PLACE WITH A WOODEN MALLET AND THEN SEALED WITH MORTAR.

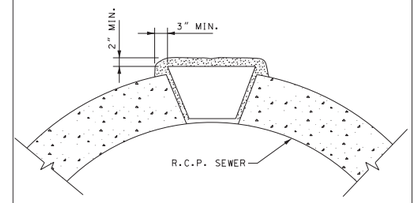

LIFTING HOLE PLUG DETAIL
FOR CONCRETE PIPE
PART OF ITEMS --------

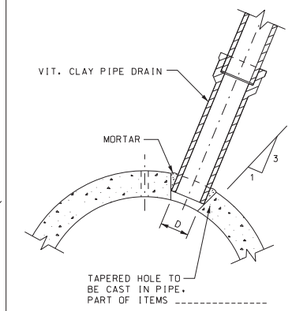

SIZE OF DRAIN	"D"
6"	6⅞"
8"	9⅛"
10"	11⅛"
12"	13½"
15"	17"
18"	20¼"
21"	23⅞"
24"	27¼"

DETAIL OF TAPERED HOLE

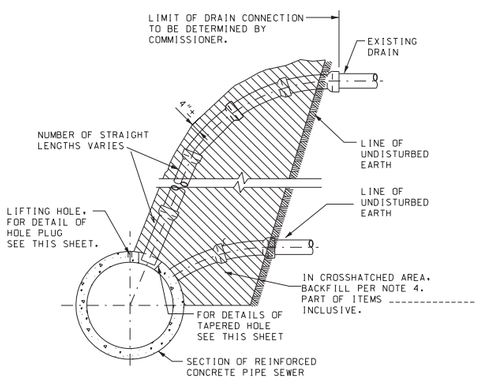

ELEVATION

TYPICAL DRAIN CONNECTIONS
FOR EXISTING DRAINS

ITEMS ----------INCLUSIVE

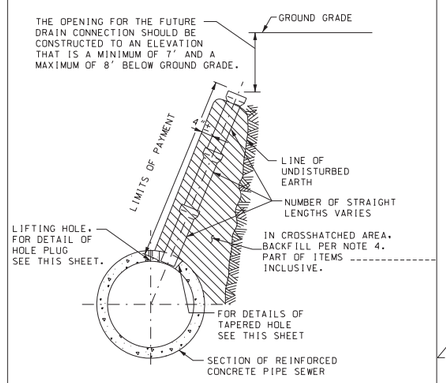

ELEVATION

TYPICAL DRAIN STACKS
FOR FUTURE USE

ITEMS ---------- INCLUSIVE

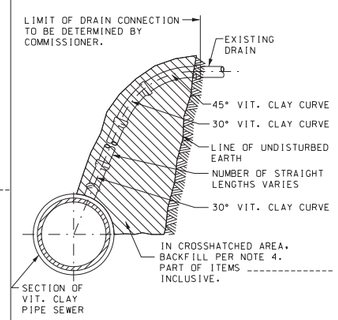

ELEVATION

TYPICAL DRAIN CONNECTIONS
FOR EXISTING DRAINS

ITEMS ---------- INCLUSIVE

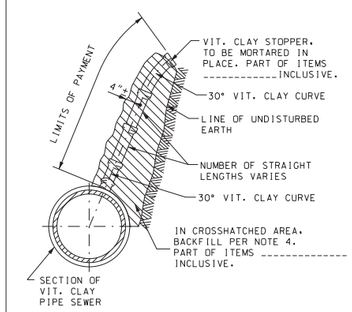

ELEVATION

TYPICAL DRAIN STACKS
FOR FUTURE USE

ITEMS ----------INCLUSIVE

NOTE:
GRANULAR MATERIAL WILL BE USED AS BEDDING FOR ALL PIPE SEWERS: SEE SPECIFICATIONS. BOOK 3.

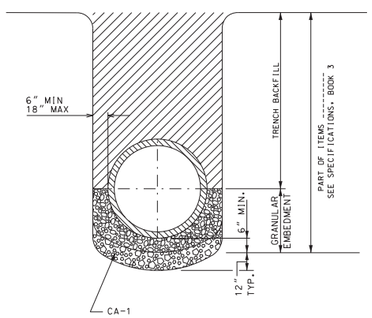

DETAIL OF GRANULAR EMBEDMENT
AND STABILIZATION FOR PIPE SEWERS

NOTES:
FOR STABILIZATION OF TRENCH BOTTOM AND PROVISIONS RELATING TO TRENCH BOX SUPPORT SEE SPECIFICATIONS. BOOK 3

NOTES:

1. ALL DRAIN CONNECTION JOINTS MUST BE MADE AS SPECIFIED IN SPECIFICATIONS..
2. FOR DUCTILE IRON PIPE DRAIN CONNECTIONS SEE SHEET NO. A.2.
3. FOR ALL GRANULAR EMBANKMENT, USE CA-7 OR CA-11
4. FOR BACKFILL OF HATCHED SUPPORT AREAS, USE CONCRETE. CA-11, FLOWABLE FILL, OR CLSM.

DRAWN BY sbw
DESIGNED BY
CHECKED BY

Scale of Drawing ½" = 1'-0"
3' 2' 1' 0 4'

DATE	DESCRIPTION
6/25/10	APPROVED PLAN

CITY OF CHICAGO
DEPARTMENT OF WATER MANAGEMENT
BUREAU OF ENGINEERING SERVICES
VITRIFIED CLAY PIPE
DRAIN CONNECTIONS

SCALE: AS SHOWN
SCALE: NONE

CONTRACT SHEET NO. X

DESIGN BY:	YA		01/27/2020	ISSUE FOR BID	YA	YMD	EJL		
DRAWN BY:	ML		10/04/2019	ISSUE FOR OUC EFP	CJB	YMD	EJL		
CHECKED BY:	EJL		06/14/2019	ISSUE FOR 100% DESIGN	LAB	YMD	EJL		
APPROVED BY:	EJL		06/14/2019	ISSUE FOR PERMIT	LAB	YMD	EJL		
CDOT/APPROVED BY:		NO.	DATE	REVISIONS	DES.	DRW.	CHK.	DCCO	CDOT

MILHOUSE
333 South Wabash Avenue
Suite 2901
Chicago, IL 60604
t 312.994.8701
f 312.987.0071
www.milhouseinc.com

PERKINS+WILL
The Wrigley Building
410 North Michigan Ave.
Suite 1600
Chicago, IL 60611
t 312.755.0770
f 312.755.0775
www.perkinswill.com

CDOT
CHICAGO DEPARTMENT OF TRANSPORTATION
DIVISION OF ENGINEERING

154 N DAMEN AVE - DAMEN GREEN LINE STATION

DRAINAGE DETAILS

CDOT PROJECT D-7-135

DATE: 01/27/2020

SPEC. NO.

DRAWING NO. C61-02

REVISION NO.

DETAIL OF TYPE I FRAME ADJUSTMENT

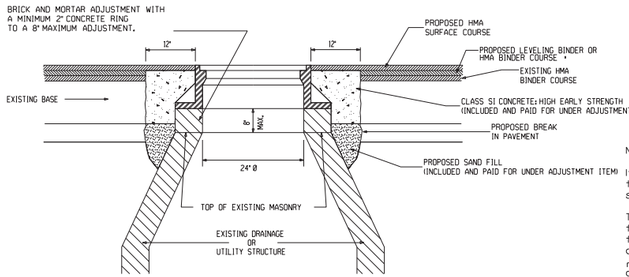

Notes:

If the adjustment exceeds an 8" height, the cone must be removed and the barrel section must be adjusted.

The contractor is required to replace any broken frames and lids of sewer structures with standard frames and lids of the DWM. In adjustment or reconstruction of sewer structures, any non-standard frames and lids must be replaced with standard frames and lids. In adjustment or reconstruction of inlets, any non-standard inlets (gutter boxes) must be replaced with DWM standard inlets.

The frames and lids of sewer structures to be abandoned, removed, or filled must be salvaged and the DWM notified for pick up.

Manholes, catch basins and inlets must be protected from the entry of asphalt/debris into the sewer system during construction. The contractor must mark locations of all sewer structures on the sidewalk before starting pavement removal/replacement. Adjustment of frames and lids of sewer structures must be completed prior to street resurfacing.

CHICAGO STANDARD INLET, TYPE A

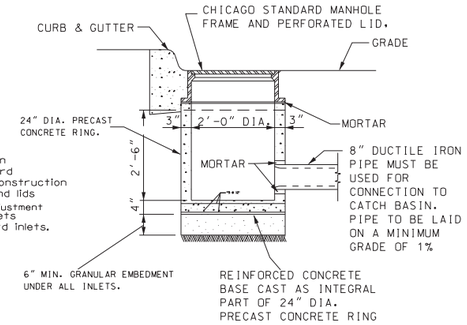

STANDARD INLET-2' Dia.

NOTE: Inlets and 3' diameter Catch Basins are to be used only with prior approval of DWM Sewer Engineer or Field Inspector.

AGGREGATE FILL AREA DETAIL

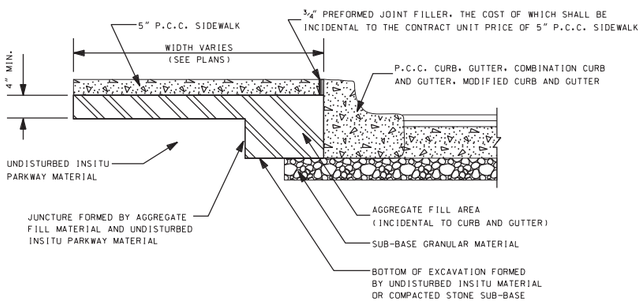

TEMPORARY HMA RAMP

FOR UTILITY STRUCTURES

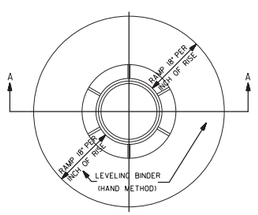

PLAN

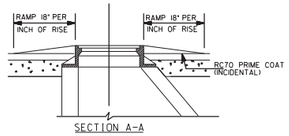

SECTION A-A

NOTE:
THE TEMPORARY HMA RAMP, LEVELING BINDER (HAND METHOD), IS TO BE FORMED WHERE DIRECTED BY THE COMMISSIONER REGARDLESS OF SHAPE (ROUND SQUARE OR RECTANGULAR), THE COST OF REMOVAL SHALL BE INCIDENTAL TO LEVELING BINDER (HAND METHOD).

DESIGN BY:	YA		01/27/2020	ISSUE FOR BID	YA	YMD	EJL		
DRAWN BY:	ML		10/04/2019	ISSUE FOR OUC EFP	CJB	YMD	EJL		
CHECKED BY:	EJL		06/14/2019	ISSUE FOR 100% DESIGN	LAB	YMD	EJL		
APPROVED BY:	EJL		06/14/2019	ISSUE FOR PERMIT	LAB	YMD	EJL		
CDOT/APPROVED BY:		NO.	DATE	REVISIONS	DES.	DRW.	CHK.	DCCO	CDOT

MILHOUSE
333 South Wabash Avenue
Suite 2901
Chicago, IL 60604
t 312.994.8701
f 312.987.0071
www.milhouseinc.com

PERKINS+WILL
The Wrigley Building
410 North Michigan Ave.
Suite 1600
Chicago, IL 60611
t 312.755.0770
f 312.755.0775
www.perkinswill.com

CDOT
CHICAGO DEPARTMENT OF TRANSPORTATION
DIVISION OF ENGINEERING

154 N DAMEN AVE - DAMEN GREEN LINE STATION

DRAINAGE DETAILS

CDOT PROJECT D-7-135

DATE: 01/27/2020

SPEC. NO.

DRAWING NO. C61-03

REVISION NO.

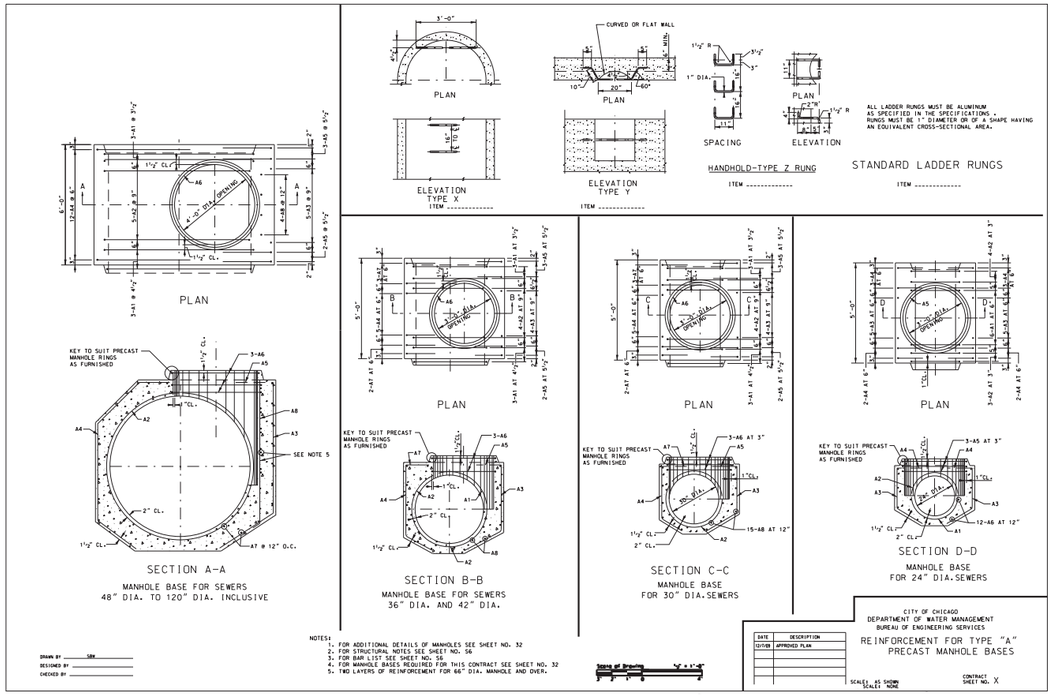

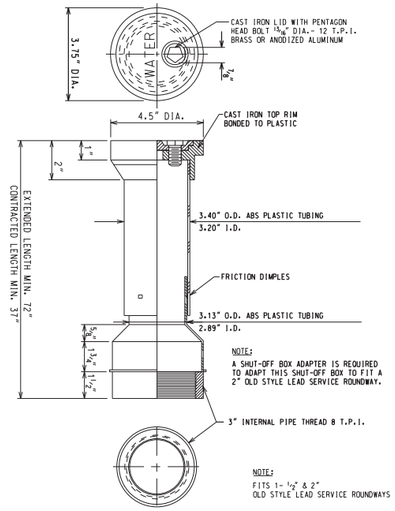

PLASTIC SHUT-OFF BOX
TYPE "B"

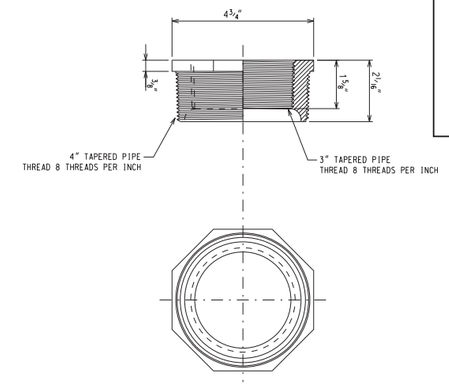

BUSHING FOR PLASTIC SHUT-OFF BOX
TYPE "B"

CITY OF CHICAGO
STANDARD CONSTRUCTION
DETAILS

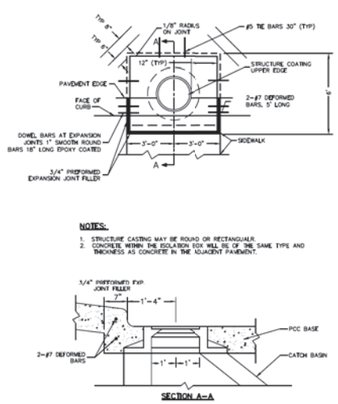

CDOT
CHICAGO DEPARTMENT OF TRANSPORTATION

DATE	REVISION	CITY OF CHICAGO
1/1/2014	REVISION 1	DETAILS OF STRUCTURE CASTING ISOLATION BOX FOR P.C.C. PAVEMENT AND BASE COURSE
		DATE 12/22/06 · SHEET A-2-10B · DRAWN BY CDOT

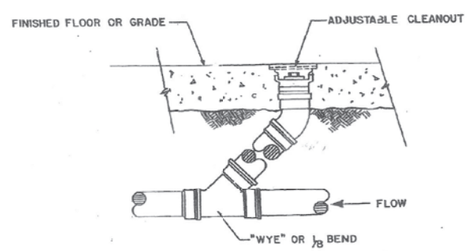

TYPICAL CLEANOUT TO FINISHED FLOOR
NOT TO SCALE

Note: May be used for pipe sizes smaller than 12" in diameter to segment pipe lengths exceeding 150 feet.

A.106

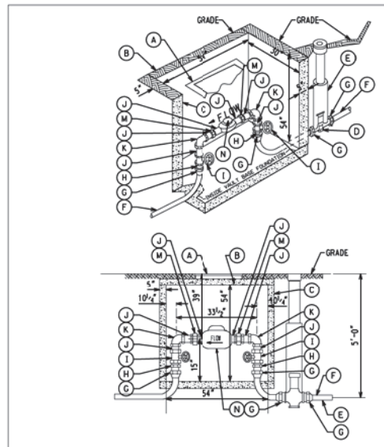

A	COVER 25 1/4"x 25 1/4" (NEENAH, R6662/P OR EQUAL) CENTERED OVER METER
B	PRECAST CONCRETE TOP
C	SOLID CONCRETE BLOCK OR PRECAST CONCRETE
D	ROUNDWAY
E	SHUT-OFF BOX
F	TYPE K COPPER
G	F.W. FLARED FITTING
H	MALE I.P.T. TO FLARED
I	FULL PORT CONTROL VALVE
J	BRASS NIP.
K	BRASS ELL.
M	BRASS UNION
N	METER

NEW COPPER 1 1/2" & 2" WATER SERVICES
STANDARD METER VAULT

REV:04.07 D-24

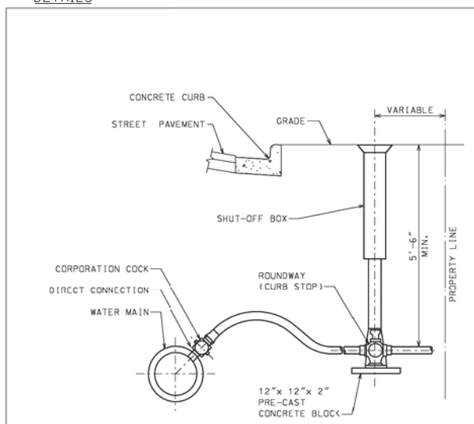

CORPORATION COCK		SHUT-OFF BOX
SIZE	WEIGHT	WEIGHT
in.	Lb.	Lb.
1.0	3.00	7.25
1.5	10.00	7.25
2.0	16.50	7.25

REV:04.07 TYPICAL 1" TO 2" WATER SERVICE D-16

DESIGN BY:	YA		01/27/2020	ISSUE FOR BID	YA	YMD	EJL		
DRAWN BY:	ML		10/04/2019	ISSUE FOR OUC EFP	CJB	YMD	EJL		
CHECKED BY:	EJL		06/14/2019	ISSUE FOR 100% DESIGN	LAB	YMD	EJL		
APPROVED BY:	EJL		06/14/2019	ISSUE FOR PERMIT	LAB	YMD	EJL		
CDOT/APPROVED BY:		NO.	DATE	REVISIONS	DES.	DRW.	CHK.	DCCO	CDOT

MILHOUSE
333 South Wabash Avenue
Suite 2901
Chicago, IL 60604
t 312.994.8701
f 312.987.0071
www.milhouseinc.com

PERKINS+WILL
The Wrigley Building
410 North Michigan Ave.
Suite 1600
Chicago, IL 60611
t 312.755.0770
f 312.755.0775
www.perkinswill.com

CDOT
CHICAGO DEPARTMENT OF TRANSPORTATION
DIVISION OF ENGINEERING

154 N DAMEN AVE - DAMEN GREEN LINE STATION

DRAINAGE DETAILS

CDOT PROJECT D-7-135 | DATE: 01/27/2020

SPEC. NO.

DRAWING NO. C61-04

REVISION NO.

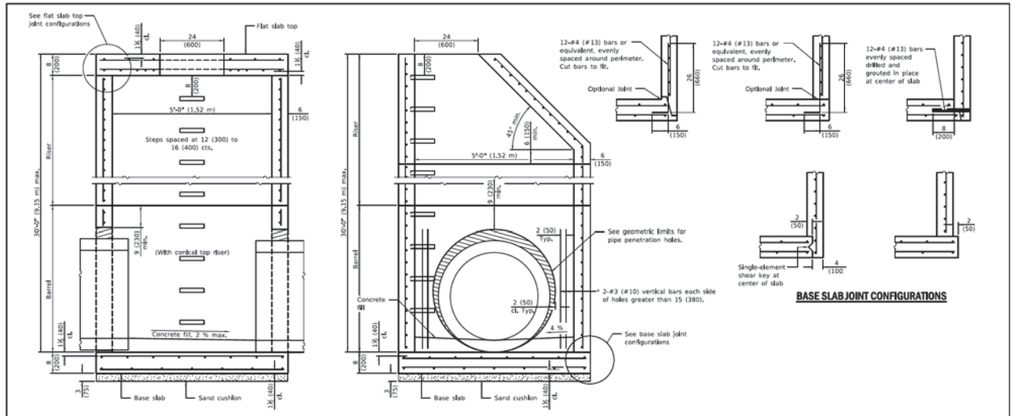

SECTION PARALLEL TO PIPE
(Without conical top riser)

SECTION PERPENDICULAR TO PIPE
(With conical top riser)

* As an alternate, the barrel wall reinforcement may be reduced to riser wall reinforcement with #3 (#10) bars placed around the pipe penetration holes as shown. This option may be utilized when the pipe penetration holes are formed as opposed to cored.

BASE SLAB JOINT CONFIGURATIONS

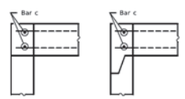

FLAT SLAB TOP JOINT CONFIGURATIONS
(Shown at access hole)

GEOMETRIC LIMITS FOR PIPE PENETRATION HOLES

1. A minimum of 9 (230) of monolithic reinforced concrete shall be maintained above pipe penetration holes > 32 (810).
2. A minimum 12 (300) inside arc length of reinforced concrete shall be maintained between pipe penetration holes > 15 (380).
3. A maximum of 60 percent of the inside perimeter of the reinforced concrete manhole walls may be removed.
4. Horizontal joints that intersect pipe penetration holes > 15 (380) shall have one joint splice for every location around the perimeter of the joint where the inside arc length between pipe penetration holes is < 24 (600). See joint splice detail.
5. The recommended pipe penetration hole is equal to the O.D. of the pipe plus 4 (100).
6. Only pipe penetration holes ≤ 15 (380) are allowed in riser sections.

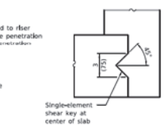

SHEAR KEY GEOMETRY
(Reinforcement not shown for clarity)

GENERAL NOTES

The manufacturer shall ensure that all precast manhole sections are additionally reinforced where required to resist damage from handling, shipping and installation stresses.

Lifting holes shall be located in the sections as per the manufacturer's recommendations, except as noted.

See Standard 602701 for details of manhole steps.

All dimensions are in inches (millimeters) unless otherwise noted.

DATE	REVISIONS
3-1-19	Moved wall reinforcement from inside face to middle.
1-1-19	Expanded / refined reinforcement options. Increased manhole depths.

PRECAST MANHOLE TYPE A
5' (1.52 m) DIAMETER
(Sheet 1 of 2)

STANDARD 602402-02

Illinois Department of Transportation
PASSED March 1, 2019 — ENGINEER OF POLICY AND PROCEDURES
APPROVED March 1, 2019 — ENGINEER OF BRIDGES AND ENVIRONMENT
BRIDGE 1-1-19

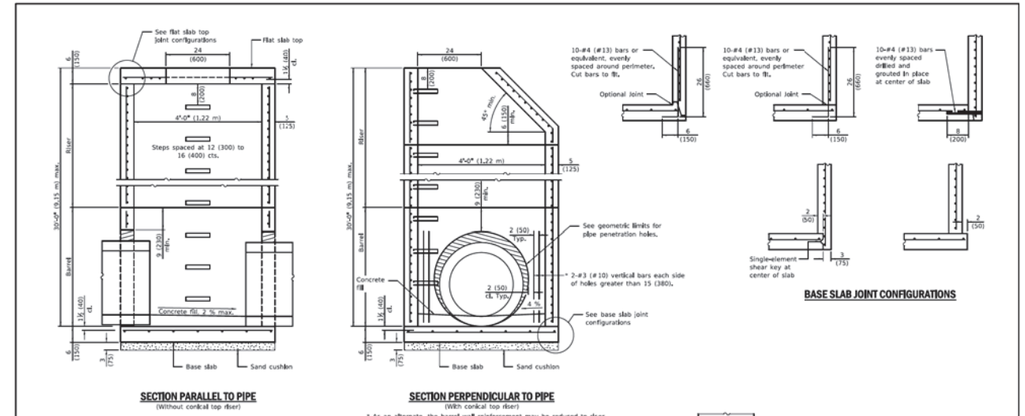

SECTION PARALLEL TO PIPE
(Without conical top riser)

SECTION PERPENDICULAR TO PIPE
(With conical top riser)

* As an alternate, the barrel wall reinforcement may be reduced to riser wall reinforcement with #3 (#10) bars placed around the pipe penetration holes as shown. This option may be utilized when the pipe penetration holes are formed as opposed to cored.

BASE SLAB JOINT CONFIGURATIONS

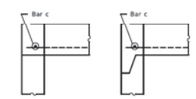

FLAT SLAB TOP JOINT CONFIGURATIONS
(Shown at access hole)

GEOMETRIC LIMITS FOR PIPE PENETRATION HOLES

1. A minimum of 9 (230) of monolithic reinforced concrete shall be maintained above pipe penetration holes > 24 (600).
2. A minimum 12 (300) inside arc length of reinforced concrete shall be maintained between pipe penetration holes > 15 (380).
3. A maximum of 60 percent of the inside perimeter of the reinforced concrete manhole walls may be removed.
4. Horizontal joints that intersect pipe penetration holes > 15 (380) shall have one joint splice for every location around the perimeter of the joint where the inside arc length between pipe penetration holes is < 24 (600). See joint splice detail.
5. The recommended pipe penetration hole is equal to the O.D. of the pipe plus 4 (100).
6. Only pipe penetration holes ≤ 15 (380) are allowed in riser sections.

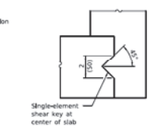

SHEAR KEY GEOMETRY
(Reinforcement not shown for clarity)

GENERAL NOTES

The manufacturer shall ensure that all precast manhole sections are additionally reinforced where required to resist damage from handling, shipping and installation stresses.

Lifting holes shall be located in the sections as per the manufacturer's recommendations, except as noted.

See Standard 602701 for details of manhole steps.

All dimensions are in inches (millimeters) unless otherwise noted.

DATE	REVISIONS
3-1-19	Moved wall reinforcement from inside face to middle.
1-1-19	Expanded / refined reinforcement options. Increased manhole depths.

PRECAST MANHOLE TYPE A
4' (1.22 m) DIAMETER
(Sheet 1 of 2)

STANDARD 602401-06

Illinois Department of Transportation
PASSED March 1, 2019 — ENGINEER OF POLICY AND PROCEDURES
APPROVED March 1, 2019 — ENGINEER OF BRIDGES AND ENVIRONMENT
BRIDGE 1-1-19

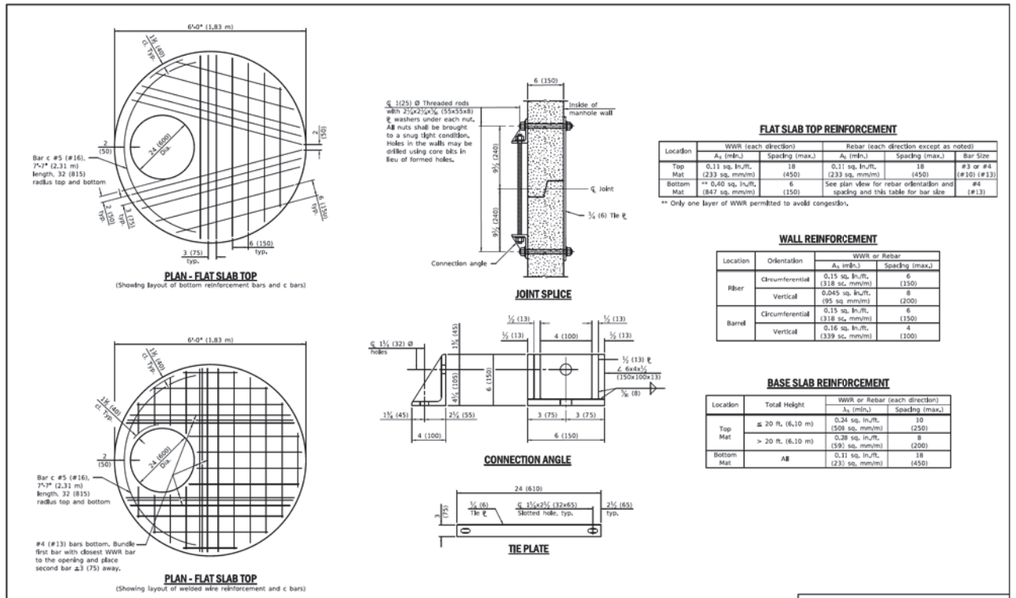

PLAN - FLAT SLAB TOP
(Showing layout of bottom reinforcement bars and c bars)

JOINT SPLICE

CONNECTION ANGLE

TIE PLATE

FLAT SLAB TOP REINFORCEMENT

Location	WWR (each direction)		Rebar (each direction except as noted)		
	A_s (min.)	Spacing (max.)	A_s (min.)	Spacing (max.)	Bar Size
Top Mat	0.11 sq. in./ft. (233 sq. mm/m)	18 (450)	0.11 sq. in./ft. (233 sq. mm/m)	18 (450)	#3 or #4 (#10) (#13)
Bottom Mat	** 0.40 sq. in./ft. (847 sq. mm/m)	6 (150)	See plan view for rebar orientation and spacing and this table for bar size		#4 (#13)

** Only one layer of WWR permitted to avoid congestion.

WALL REINFORCEMENT

Location	Orientation	WWR or Rebar	
		A_s (min.)	Spacing (max.)
Riser	Circumferential	0.15 sq. in./ft. (318 sq. mm/m)	6 (150)
	Vertical	0.045 sq. in./ft. (95 sq. mm/m)	8 (200)
Barrel	Circumferential	0.15 sq. in./ft. (318 sq. mm/m)	6 (150)
	Vertical	0.16 sq. in./ft. (339 sq. mm/m)	4 (100)

BASE SLAB REINFORCEMENT

Location	Total Height	WWR or Rebar (each direction)	
		A_s (min.)	Spacing (max.)
Top Mat	≤ 20 ft. (6.10 m)	0.24 sq. in./ft. (508 sq. mm/m)	10 (250)
	> 20 ft. (6.10 m)	0.28 sq. in./ft. (592 sq. mm/m)	8 (200)
Bottom Mat	All	0.11 sq. in./ft. (233 sq. mm/m)	18 (450)

PRECAST MANHOLE TYPE A
5' (1.52 m) DIAMETER
(Sheet 2 of 2)

STANDARD 602402-02

Illinois Department of Transportation
PASSED March 1, 2019 — ENGINEER OF POLICY AND PROCEDURES
APPROVED March 1, 2019 — ENGINEER OF BRIDGES AND ENVIRONMENT
BRIDGE 1-1-19

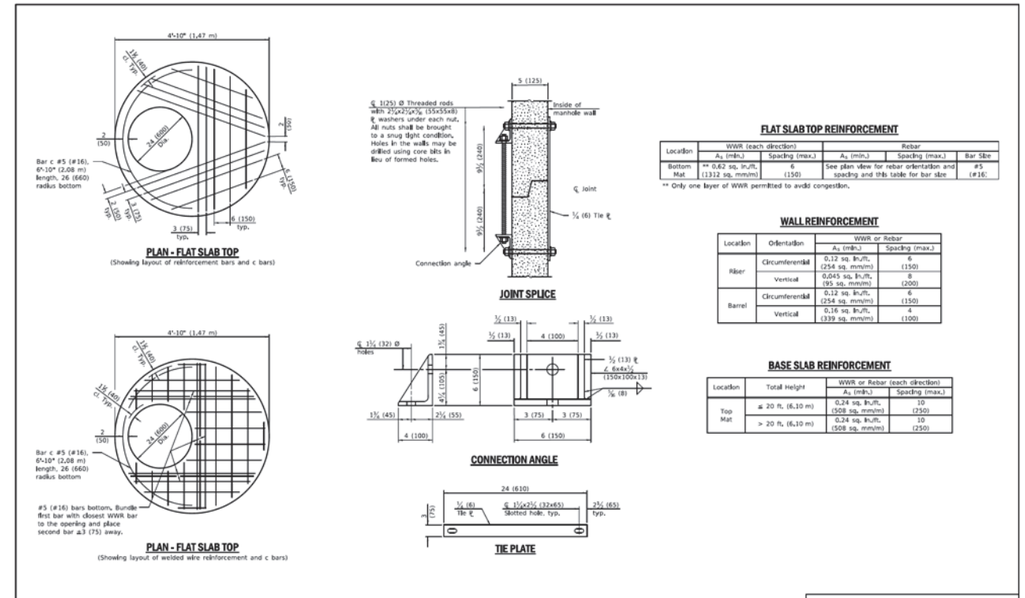

PLAN - FLAT SLAB TOP
(Showing layout of reinforcement bars and c bars)

JOINT SPLICE

CONNECTION ANGLE

TIE PLATE

FLAT SLAB TOP REINFORCEMENT

Location	WWR (each direction)		Rebar		
	A_s (min.)	Spacing (max.)	A_s (min.)	Spacing (max.)	Bar Size
Bottom Mat	** 0.62 sq. in./ft. (1312 sq. mm/m)	6 (150)	See plan view for rebar orientation and spacing and this table for bar size		#5 (#16)

** Only one layer of WWR permitted to avoid congestion.

WALL REINFORCEMENT

Location	Orientation	WWR or Rebar	
		A_s (min.)	Spacing (max.)
Riser	Circumferential	0.12 sq. in./ft. (254 sq. mm/m)	6 (150)
	Vertical	0.045 sq. in./ft. (95 sq. mm/m)	8 (200)
Barrel	Circumferential	0.12 sq. in./ft. (254 sq. mm/m)	6 (150)
	Vertical	0.16 sq. in./ft. (339 sq. mm/m)	4 (100)

BASE SLAB REINFORCEMENT

Location	Total Height	WWR or Rebar (each direction)	
		A_s (min.)	Spacing (max.)
Top Mat	≤ 20 ft. (6.10 m)	0.24 sq. in./ft. (508 sq. mm/m)	10 (250)
	> 20 ft. (6.10 m)	0.24 sq. in./ft. (508 sq. mm/m)	10 (250)

PRECAST MANHOLE TYPE A
4' (1.22 m) DIAMETER
(Sheet 2 of 2)

STANDARD 602401-06

Illinois Department of Transportation
PASSED March 1, 2019 — ENGINEER OF POLICY AND PROCEDURES
APPROVED March 1, 2019 — ENGINEER OF BRIDGES AND ENVIRONMENT
BRIDGE 1-1-19

DESIGN BY:	YA		01/27/2020	ISSUE FOR BID	YA	YMD	EJL		
DRAWN BY:	ML		10/04/2019	ISSUE FOR OUC EFP	CJB	YMD	EJL		
CHECKED BY:	EJL		06/14/2019	ISSUE FOR 100% DESIGN	LAB	YMD	EJL		
APPROVED BY:	EJL		06/14/2019	ISSUE FOR PERMIT	LAB	YMD	EJL		
CDOT/APPROVED BY:		NO.	DATE	REVISIONS	DES.	DRW.	CHK.	DCCO	CDOT

MILHOUSE
333 South Wabash Avenue
Suite 2901
Chicago, IL 60604
t 312.994.8701
f 312.987.0071
www.milhouseinc.com

PERKINS+WILL
The Wrigley Building
410 North Michigan Ave.
Suite 1600
Chicago, IL 60611
t 312.755.0770
f 312.755.0775
www.perkinswill.com

CDOT
CHICAGO DEPARTMENT OF TRANSPORTATION
DIVISION OF ENGINEERING

154 N DAMEN AVE - DAMEN GREEN LINE STATION

DRAINAGE DETAILS

CDOT PROJECT D-7-135 | DATE: 01/27/2020

SPEC. NO.

DRAWING NO. C61-05

REVISION NO.

GENERAL NOTES

1. LOCATION OF UTILITIES AND PROPERTY LINES ARE FROM THE BEST INFORMATION AVAILABLE. EXACT LOCATION AND COMPLETENESS ARE NOT GUARANTEED.
2. THE CONTRACTOR MUST VERIFY THE LOCATION OF UNDERGROUND UTILITIES WITH THE UTILITY OWNERS PRIOR TO DOING ANY WORK IN THE VICINITY. THE CONTRACTOR MUST COMPLY WITH REQUIREMENTS OF UTILITY OWNERS REGARDING NOTICE OF WORK AND PROTECTION OF UTILITIES. THE CONTRACTOR MUST COMPLY WITH THE CITY OF CHICAGO. DEPARTMENT OF TRANSPORTATION DAMAGE PREVENTION PROTOCOL CITY INFRASTRUCTURE DEPARTMENTS. ALL UTILITIES MUST BE NOTIFIED AT LEAST 48 HOURS BEFORE CONSTRUCTION. (CALL DIGGER 312-744-7000).
3. TEST PITS MUST BE EXCAVATED IN ADVANCE OF PIPELINE CONSTRUCTION IN ORDER TO CONFIRM DEPTH AND LOCATION OF EXISTING UTILITIES AND WHEN DIRECTED BY THE DEPARTMENT MANAGER. NO ADDITIONAL PAYMENT WILL BE MADE FOR TEST PIT EXCAVATION.
4. IF ANY PUBLIC OR PRIVATE UTILITIES CROSS THE WATER MAIN TRENCH AND MUST REMAIN IN PLACE. THE CONTRACTOR MUST PROTECT SAID UTILITY IN CONFORMANCE WITH THE SPECIFICATIONS OR AS DIRECTED BY THE COMMISSIONER.
5. PROVIDE EROSION CONTROL IN ACCORDANCE WITH THE SPECIFICATIONS.
6. FITTINGS AND THEIR LOCATIONS INDICATED ON THE DRAWINGS ARE TENTATIVE. THE CONTRACTOR MUST COMPLETE THE INSTALLATION WITH THE NECESSARY FITTINGS DICTATED BY FIELD CONDITIONS. NO ADDITIONAL PAYMENT WILL BE MADE FOR DEVIATIONS FROM THE INDICATED FITTINGS.
7. WORK INDICATED ON THE PLANS AND NOT REFERENCED TO A BID ITEM IS CONSIDERED INCIDENTAL TO THE WORK TO WHICH IT APPLIES AND NO ADDITIONAL COMPENSATION WILL BE ALLOWED.
8. WATER MAIN AND FITTINGS LOCATIONS SHOWN ON THE DRAWINGS FOR THE NEW WATER MAINS AND APPURTENANCES MAY BE CHANGED BY THE COMMISSIONER DUE TO FIELD CONDITIONS. NO ADDITIONAL COMPENSATION WILL BE ALLOWED FOR SUCH CHANGES. UNLESS PREVIOUSLY APPROVED BY THE COMMISSIONER.
9. THE CONTRACTOR MUST PROVIDE THRUST RESTRAINTS IN ACCORDANCE WITH THE SPECIFICATIONS. THE CONTRACTOR MUST FURNISH AND INSTALL MECHANICAL JOINT THRUST RESTRAINT GLANDS AT ALL FITTINGS AND MECHANICAL JOINTS.
10. THE CONTRACTOR MUST VERIFY THE OPERATION OF EVERY VALVE NECESSARY FOR THE REQUIRED WATER MAIN SHUT DOWN FOR EACH PIPE SECTION. FOR VALVES OR WATER MAINS UNDER 16-INCHES IN DIAMETER. THE WORK MUST BE DONE UNDER THE DIRECT SUPERVISION OF A DEPARTMENT REPRESENTATIVE AT LEAST 2 WEEKS PRIOR TO THE START OF THE JOB. A 24 HOUR ADVANCE NOTICE MUST BE GIVEN TO ALL CONSUMERS EFFECTED AND THE BUREAU OF OPERATIONS AND DISTRIBUTION. THE OPERATION OF ALL VALVES 16-INCHES IN DIAMETER AND LARGER MUST BE PERFORMED BY CITY FORCES PURSUANT TO A 72 HOUR ADVANCE NOTIFICATION TO THE DEPARTMENT. ANY VALVE FOUND NOT OPERABLE WILL BE REPAIRED OR REPLACED BY THE DEPARTMENT UNLESS DIRECTED OTHERWISE BY THE COMMISSIONER.
11. IN INSTANCES WHERE CHLORINATION IS TO BE DONE AGAINST ANY EXISTING VALVE. AT THE TIME THAT THE EXISTING WATER MAIN IS BREACHED FOR FINAL CONNECTION. THE CONTRACTOR IS TO VERIFY THAT THE EXISTING VALVES ARE IN GOOD OPERATING CONDITION AND DO NOT LEAK. ANY LEAKING VALVE SHOULD BE BROUGHT TO THE COMMISSIONERS' ATTENTION AND BE REPAIRED OR REPLACED PRIOR TO MAKING PIPE CONNECTIONS TO THE EXISTING WATER MAIN. THE VALVE SHOULD REMAIN IN THE CLOSED POSITION UNTIL THE NEW WATER MAIN IS APPROVED FOR SERVICE.

REV:04.07

GENERAL NOTES
WATER MAIN CONTRACTS

D-20
SHT. 1 OF 2

GENERAL NOTES (CONTINUED)

12. ALL OPENINGS IN EXISITNG WATER MAINS MUST BE PLUGGED OR CAPPED WITH DUCTILE IRON FITTINGS UNTIL THE MAIN IS ABANDONED.
13. ALL VALVE BASINS MUST BE CONSTRUCTED OF PRE-CAST RE-NFORCED CONCRETE UNLESS DIRECTED OTHERWISE BY THE COMMISSIONER.
14. NOTES INDICATING S.N.L., E.W.L., ETC., MEAN SOUTH OF THE NORTH PROPERTY LINE. EAST OF THE WEST PROPERTY LINE. ETC. AND ARE MEASURED FROM THE NEAREST STREET.
15. IF A STANDARD MECHANICAL JOINT SLEEVE DOES NOT FIT TO MAKE CONNECTION OF THE NEW PIPE TO THE EXISTING PIPE. A TRANSITION SLEEVE MUST BE USED. NO GRINDING OF THE EXISTING PIPE IS PERMITTED.
16. BURIED STREET CAR TRACKS ARE SHOWN FOR INFORMATIONAL PURPOSES ONLY. EXACT LOCATIONS AND DIMENSIONS ARE UNKNOWN UNLESS NOTED OTHERWISE. CAUTION SHOULD BE EXERCISED WHEN EXCAVATING IN THE STREETS CONTAINING BURIED STREET CAR TRACKS. BURIED TRACKS AND CABLES MAY BE USED FOR ELECTRICAL GROUNDING BY THE CHICAGO TRANSIT AUTHORITY OR MEMBERS OF THE CHICAGO AREA JOINT ELECTROLYSIS COMMITTEE STANDARDS. ELECTRICAL CONDUCTIVITY MUST BE MAINTAINED.
17. HOUSE DRAINS ARE NOT SHOWN ON THE DRAWINGS. THE CONTRACTOR MUST LOCATE ALL HOUSE DRAINS WITHIN THE AREA OF EXCAVATION AND MAKE ADJUSTMENTS AND/OR REPAIRS.
18. THE DEPARTMENT WILL PROVIDE THE NECESSARY I.E.P.A. WATER MAIN CONSTRUCTION PERMITS FOR THIS CONTRACT.
19. WORK WITHIN STATE ROUTES ARE NOTED ON THE DRAWINGS AND WILL REQUIRE I.C.O.T.. REGION 1. UTILITY PERMITS. THE CONTRACTOR IS RESPONSIBLE FOR SECURING ALL PERMITS. INITIATED BY THE DEPARTMENT AND OBTAINING PERFORMANCE BONDS. ALL WORK MUST BE IN ACCORDANCE WITH I.D.O.T. PERMIT REQUIREMENTS. QUESTIONS SHOULD BE DIRECTED TO: I.D.O.T REGION ONE UTILITIES COORDINATOR AT (847) 705-4258.
20. ABANDON EXISTING WATER MAINS IN ACCORDANCE WITH THE SPECIFICATIONS.
21. **SWAB PIPE AND FITTINGS THAT WILL NOT BE PRESSURE TESTED OR CHLORINATED WITH CHLORINE SOLUTION DURING INSTALLATION AND USE EXTRA PRECAUTION TO PREVENT SOIL AND DEBRIS FROM ENTERING THE PIPE. INCORPORATE UNTESTED PIPE INTO THE FLUSHING ROUTINE WHEN POSSIBLE; WHEN CONNECTING NEW PIPE TO THE EXISTING WATER SYSTEM. USE OPERATING PRESSURE TO VISUALLY INSPECT FOR LEAKS. WHEN FEASIBLE, PERFORM INSPECTION PRIOR TO BACKFILLING. COMPLY WITH ALL STANDARDS AND REQUIREMENTS OF THE BUREAU OF WATER QUALITY (312) 744-8190.**

REV:04.07

GENERAL NOTES
WATER MAIN CONTRACTS

D-20
SHT. 2 OF 2

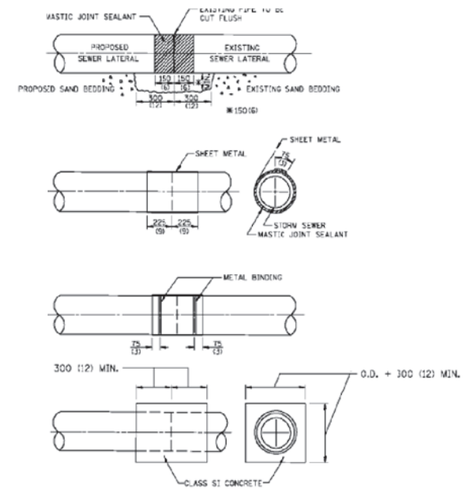

DETAIL

CONCRETE COLLAR

CONSTRUCTION SEQUENCE

1. CUT THE EXISTING END OF THE PIPE SO AS TO PRESENT A FLUSH BUTT JOINT. BRUSH AND CLEAN ALL PIPES.
2. APPLY THE MASTIC JOINT SEALANT TO THE FIRST 150 (6) OF EACH PIPE.
3. BUTT THE PIPES TOGETHER LEAVING A MINIMUM OF 300 x 150 (12 x 6) DEEP EXCAVATION UNDER AND AROUND EACH PIPE END.
4. CUT A PIECE OF SHEET METAL GAGE NO. 19 1.1 (0.0418) 450 (18) WIDE BY THE OUTSIDE CIRCUMFERANCE OF THE PIPE PLUS 75 (3) LONG.
5. WRAP THE SHEET METAL AROUND THE PIPES, 225 (9) ON EACH SIDE OF THE JOINT, STARTING AT THE TOP OF THE PIPE.
6. LAP THE SHEET METAL AT LEAST 75 (3) AT THE TOP OF THE PIPE AND PLACE THE MASTIC JOINT SEALANT BETWEEN THE LAP.
7. PLACE TWO METAL BANDS AROUND THE SHEET METAL AND TIGHTEN.
8. WIPE OFF ANY EXCESS MASTIC JOINT SEALANT THAT OOZES OUT FROM BETWEEN THE SHEET METAL AND THE PIPES.
9. PLACE CLASS SI CONCRETE AROUND THE JOINT.

NOTES:

CARE MUST BE TAKEN TO PREVENT DEBRIS FROM ENTERING THE SEWER. ALL DEBRIS WHICH ENTERS THE SEWER MUST BE REMOVED. THE SEWER MUST BE LEFT CLEAN AND UNOBSTRUCTED UPON COMPLETION OF THE CONTRACT.

CARE MUST BE TAKEN TO PREVENT ANY PART OF THE NEW PIPE CONNECTION FROM PROJECTING INTO THE EXISTING SEWER.

BASIS OF PAYMENT:

CONCRETE COLLAR FOR CONNECTING A PROPOSED STORM SEWER TO AN EXISTING STORM SEWER WILL NOT BE PAID PAID FOR SEPARATELY BUT SHALL BE INCLUDED IN THE COST OF THE PROPOSED STORM SEWER.

DESIGN BY:	YA		01/27/2020	ISSUE FOR BID	YA	YMD	EJL		
DRAWN BY:	ML		10/04/2019	ISSUE FOR OUC EFP	CJB	YMD	EJL		
CHECKED BY:	EJL		06/14/2019	ISSUE FOR 100% DESIGN	LAB	YMD	EJL		
APPROVED BY:	EJL		06/14/2019	ISSUE FOR PERMIT	LAB	YMD	EJL		
CDOT/APPROVED BY:		NO.	DATE	REVISIONS	DES.	DRW.	CHK.	DCCO	CDOT

MILHOUSE
333 South Wabash Avenue
Suite 2901
Chicago, IL 60604
t 312.994.8701
f 312.987.0071
www.milhouseinc.com

PERKINS+WILL
The Wrigley Building
410 North Michigan Ave.
Suite 1600
Chicago, IL 60611
t 312.755.0770
f 312.755.0775
www.perkinswill.com

CDOT
CHICAGO DEPARTMENT OF TRANSPORTATION
DIVISION OF ENGINEERING

154 N DAMEN AVE - DAMEN GREEN LINE STATION

DRAINAGE DETAILS

CDOT PROJECT D-7-135

DATE: 01/27/2020

SPEC. NO.

DRAWING NO.
C61-06

REVISION NO.

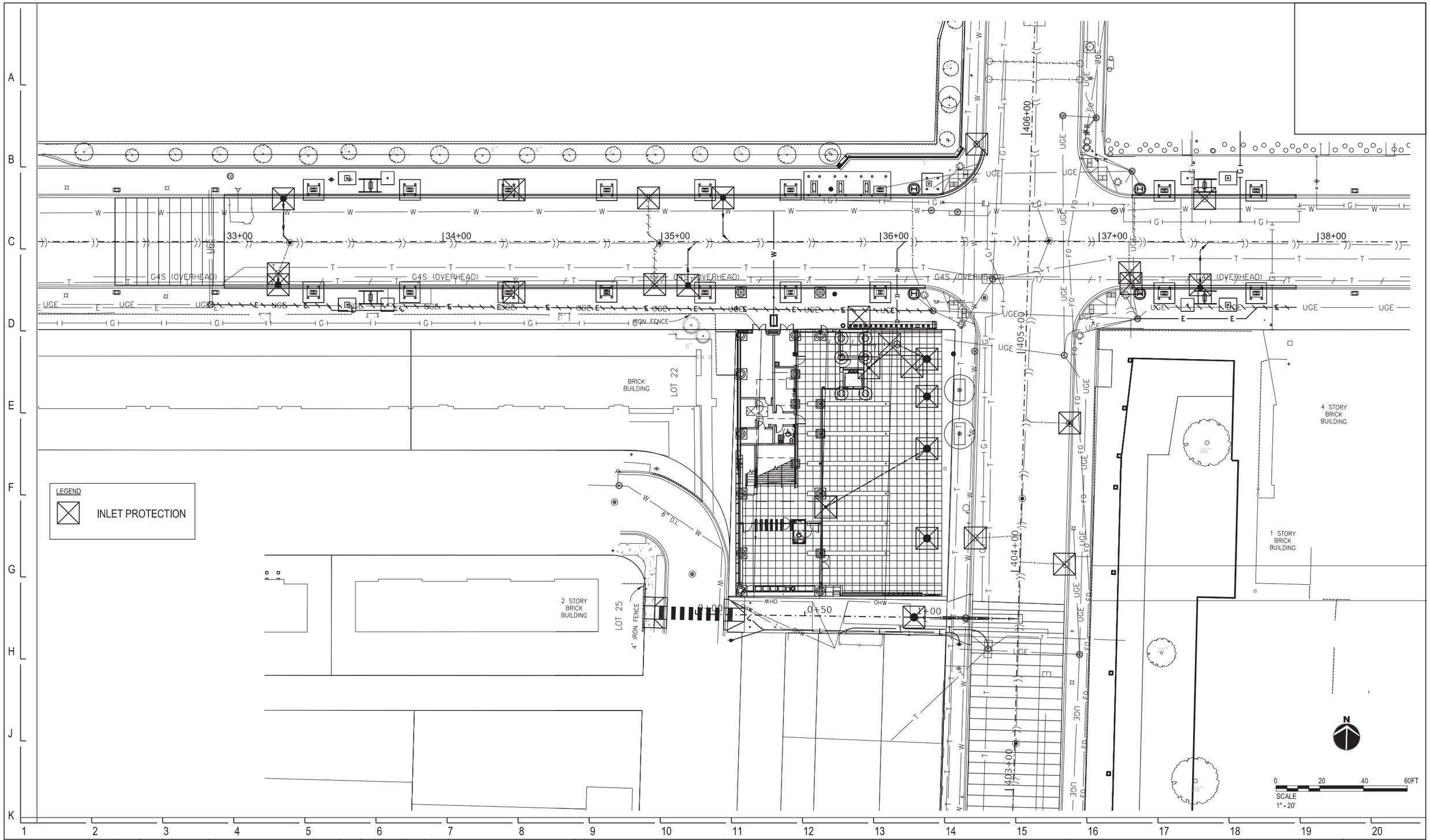

DESIGN BY:	YA		01/27/2020	ISSUE FOR BID	YA	YMD	EJL		
DRAWN BY:	ML		10/04/2019	ISSUE FOR OUC EFP	CJB	YMD	EJL		
CHECKED BY:	EJL		06/14/2019	ISSUE FOR 100% DESIGN	LAB	YMD	EJL		
APPROVED BY:	EJL		06/14/2019	ISSUE FOR PERMIT	LAB	YMD	EJL		
CDOT/APPROVED BY:		NO.	DATE	REVISIONS	DES.	DRW.	CHK.	DCCO	CDOT

MILHOUSE
333 South Wabash Avenue
Suite 2901
Chicago, IL 60604
t 312.994.8701
f 312.987.0071
www.milhouseinc.com

PERKINS+WILL
The Wrigley Building
410 North Michigan Ave.
Suite 1600
Chicago, IL 60611
t 312.755.0770
f 312.755.0775
www.perkinswill.com

CDOT
CHICAGO DEPARTMENT OF TRANSPORTATION
DIVISION OF ENGINEERING

154 N DAMEN AVE - DAMEN GREEN LINE STATION

EROSION AND SEDIMENT CONTROL PLAN

CDOT PROJECT D-7-135

DATE: 01/27/2020

SPEC. NO.

DRAWING NO. C70-01

REVISION NO.

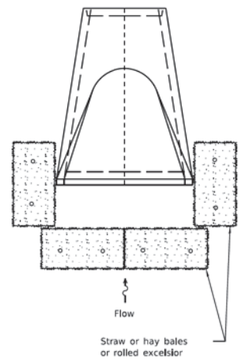

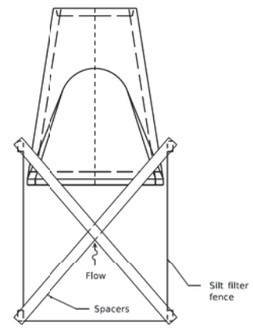

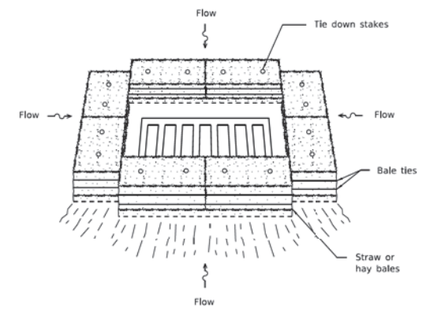

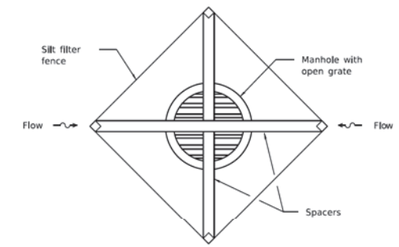

INLET AND PIPE PROTECTION

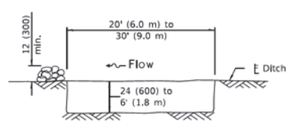

The performance of the basin will improve if put into a series.

ELEVATION

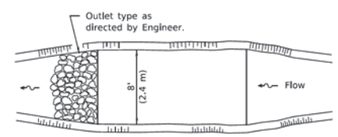

The long dimension should be parallel with the direction of the flow. Accumulated silt shall be removed anytime the basins become 75% filled.

PLAN

SEDIMENT BASIN

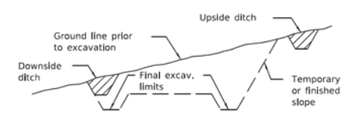

TYPICAL CUT CROSS-SECTION

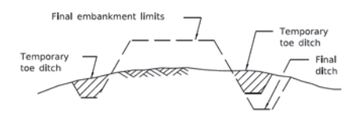

TYPICAL FILL CROSS-SECTION

TEMPORARY DITCHES FOR CUT & FILL SECTIONS

Illinois Department of Transportation

PASSED January 1, 2013
Michael Brand
ENGINEER OF POLICY AND PROCEDURES
APPROVED January 1, 2013
ENGINEER OF DESIGN AND ENVIRONMENT

ISSUED 1-1-97

TEMPORARY EROSION CONTROL SYSTEMS
(Sheet 2 of 2)

STANDARD 280001-07

DESIGN BY:	YA		01/27/2020	ISSUE FOR BID	YA	YMD	EJL		
DRAWN BY:	ML		10/04/2019	ISSUE FOR OUC EFP	CJB	YMD	EJL		
CHECKED BY:	EJL		06/14/2019	ISSUE FOR 100% DESIGN	LAB	YMD	EJL		
APPROVED BY:	EJL		06/14/2019	ISSUE FOR PERMIT	LAB	YMD	EJL		
CDOT/APPROVED BY:		NO.	DATE	REVISIONS	DES.	DRW.	CHK.	DCCO	CDOT

MILHOUSE
333 South Wabash Avenue
Suite 2901
Chicago, IL 60604
t 312.994.8701
f 312.987.0071
www.milhouseinc.com

PERKINS+WILL
The Wrigley Building
410 North Michigan Ave.
Suite 1600
Chicago, IL 60611
t 312.755.0770
f 312.755.0775
www.perkinswill.com

CDOT
CHICAGO DEPARTMENT OF TRANSPORTATION
DIVISION OF ENGINEERING

154 N DAMEN AVE - DAMEN GREEN LINE STATION

EROSION CONTROL DETAIL

CDOT PROJECT D-7-135 | DATE: 01/27/2020

SPEC. NO.

DRAWING NO. C71-01

REVISION NO.

SCHEDULE OF SIGNS

MUTCD DESIGNATION	DESCRPTION	SIZE (INCHES)		REMOVALS	RELOCATIONS	NEW SINGLE SIDED	NEW DOUBLE SIDED	EXISTING TO REMAIN
R3-17	BIKE LANE (SYMBOL)	30X30		0	0	0	0	1
R7-201-3	NO PARKING (SYMBOL) LEFT ARROW (SYMBOL) TOW ZONE	30X30		3	0	10	0	9
R7-1-4	NO PARKING (SYMBOL)	18X18		0	0	0	0	1
R7-210-1	SNOWFLAKE (SYMBOL) WHEN SNOW IS OVER 2 INCHES TOW ZONE	18X18		5	0	7	0	4
R7-301-44	NO PARKING (SYMBOL) DURING STADIUM EVENTS TOW ZONE	18X24		1	0	1	0	7

NOTES:

1. THE COST OF MOUNTING SIGN PANELS TO CTA COLUMNS OR EXISTING POSTS WILL BE CONSIDERED INCLUDED IN THE CONTRACT
2. DIG METHOD (DG) OR DRILL METHOD (DR) POLE INSTALLATION WILL BE CONSIDERED INCLUDED IN COST OF THE CONTRACT
3. ONLY STAINLESS STEEL NUTS AND BOLTS MAY BE USED FOR SIGN MOUNTING.

LEGEND

RMN = EXISTING SIGN PANEL TO REMAIN
NSS = SIGN PANEL, TYPE 1, NON-RETROREFLECTIVE, SINGLE-SIDED
CLP = INSTALL SIGN PANEL, CENTER MOUNT BANDED TO LIGHT POLE, CTA COLUMN, OR SIGNAL POST

N

0 20 40 60FT
SCALE
1" - 20'

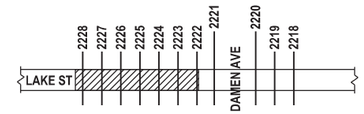

KEY PLAN

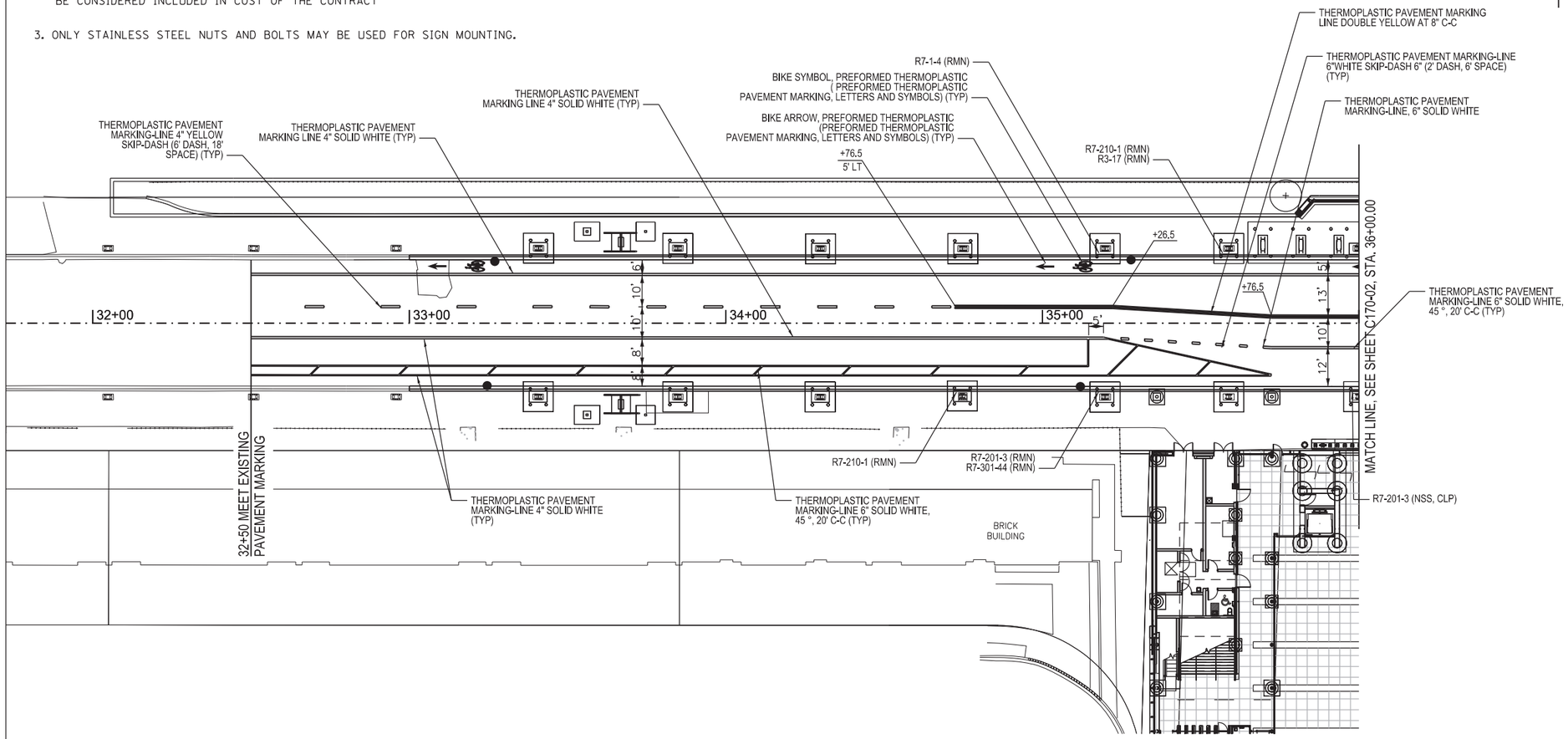

DESIGN BY:	YA		01/27/2020	ISSUE FOR BID	YA	YMD	EJL		
DRAWN BY:	ML		10/04/2019	ISSUE FOR OUC EFP	CJB	YMD	EJL		
CHECKED BY:	EJL		06/14/2019	ISSUE FOR 100% DESIGN	LAB	YMD	EJL		
APPROVED BY:	EJL		06/14/2019	ISSUE FOR PERMIT	LAB	YMD	EJL		
CDOT/APPROVED BY:		NO.	DATE	REVISIONS	DES.	DRW.	CHK.	DCCO	CDOT

MILHOUSE
333 South Wabash Avenue
Suite 2901
Chicago, IL 60604
t 312.994.8701
f 312.987.0071
www.milhouseinc.com

PERKINS+WILL
The Wrigley Building
410 North Michigan Ave.
Suite 1600
Chicago, IL 60611
t 312.755.0770
f 312.755.0775
www.perkinswill.com

CDOT
CHICAGO DEPARTMENT OF TRANSPORTATION
DIVISION OF ENGINEERING

154 N DAMEN AVE - DAMEN GREEN LINE STATION

PROPOSED SIGNAGE AND PAVEMENT MARKING

CDOT PROJECT D-7-135

DATE: 01/27/2020

SPEC. NO.

DRAWING NO. C80-01

REVISION NO.

NOTES:

1. THE COST OF MOUNTING SIGN PANELS TO CTA COLUMNS OR EXISTING POSTS WILL BE CONSIDERED INCLUDED IN THE CONTRACT

2. DIG METHOD (DG) OR DRILL METHOD (DR) POLE INSTALLATION WILL BE CONSIDERED INCLUDED IN COST OF THE CONTRACT.

3. ONLY STAINLESS STEEL NUTS AND BOLTS MAY BE USED FOR SIGN MOUNTING.

LEGEND

RMN = EXISTING SIGN PANEL TO REMAIN
RS = REMOVE SIGN PANEL AND SALVAGE
RSPS = REMOVE SIGN PANEL AND POLE ASSEMBLY AND SALVAGE
NSS = SIGN PANEL, TYPE 1, NON-RETROREFLECTIVE, SINGLE-SIDED
RSS = SIGN PANEL, TYPE 1, RETROREFLECTIVE, TYPE A, SINGLE-SIDED
AZ = SIGN PANEL, TYPE 1, RETROREFLECTIVE, TYPE AZ, SINGLE-SIDED
RE = RELOCATE SIGN PANEL - TYPE 1
CSP = INSTALL SIGN PANEL, CENTER MOUNT ON SIGN POLE
FSP = INSTALL SIGN PANEL, FLAG MOUNT ON SIGN POLE
CLP = INSTALL SIGN PANEL, CENTER MOUNT BANDED TO LIGHT POLE, CTA COLUMN, OR SIGNAL POST
DR = FURNISH AND INSTALL POLE AND BASE, DRILL METHOD

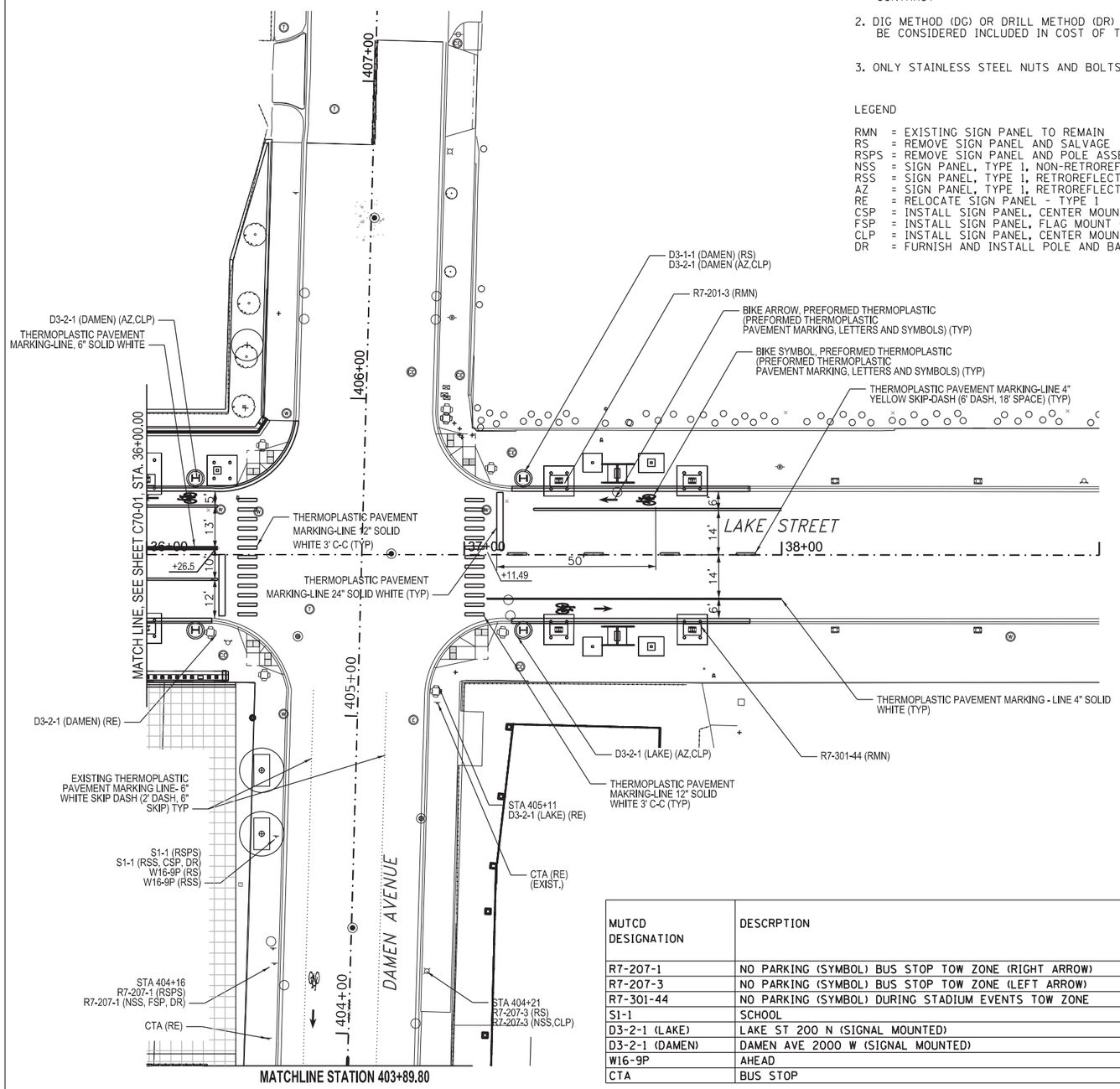

MATCHLINE STATION 403+89.80

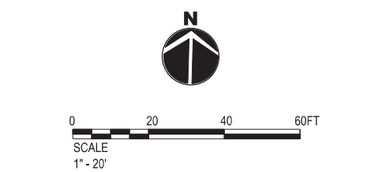

KEY PLAN

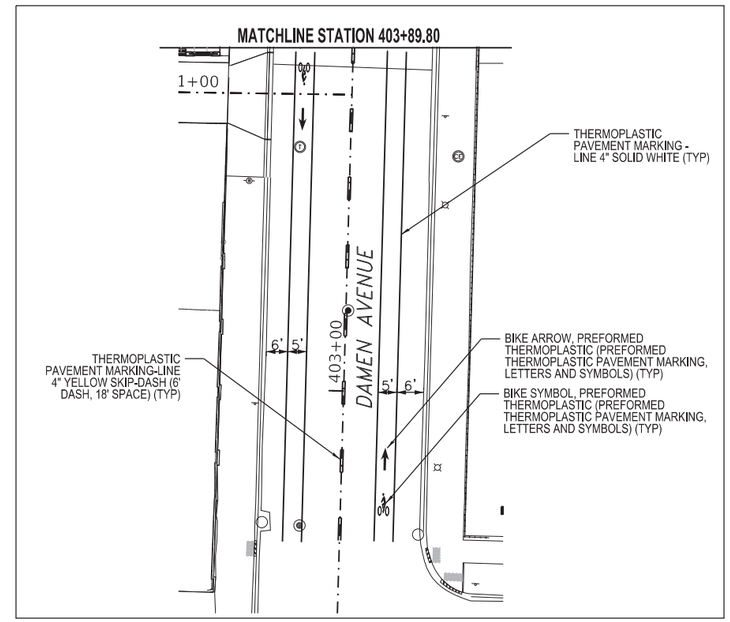

SCHEDULE OF SIGNS

MUTCD DESIGNATION	DESCRPTION	SIZE (INCHES)	REFLECTORIZED	REMOVALS	RELOCATIONS	NEW SINGLE SIDED	NEW DOUBLE SIDED	EXISTING TO REMAIN
R7-207-1	NO PARKING (SYMBOL) BUS STOP TOW ZONE (RIGHT ARROW)	18X18	N	1	0	1	0	0
R7-207-3	NO PARKING (SYMBOL) BUS STOP TOW ZONE (LEFT ARROW)	18X18	N	1	0	1	0	0
R7-301-44	NO PARKING (SYMBOL) DURING STADIUM EVENTS TOW ZONE	18X18	N	1	0	1	0	7
S1-1	SCHOOL	36X36	Y	1	0	1	0	0
D3-2-1 (LAKE)	LAKE ST 200 N (SIGNAL MOUNTED)	32X18	Y	0	1	4	0	1
D3-2-1 (DAMEN)	DAMEN AVE 2000 W (SIGNAL MOUNTED)	40X18	Y	0	1	2	0	0
W16-9P	AHEAD	36X18	Y	1	0	1	0	0
CTA	BUS STOP	24X24	N	0	2	0	0	0

DESIGN BY:	YA		01/27/2020	ISSUE FOR BID	YA	YMD	EJL		
DRAWN BY:	ML		10/04/2019	ISSUE FOR OUC EFP	CJB	YMD	EJL		
CHECKED BY:	EJL		06/14/2019	ISSUE FOR 100% DESIGN	LAB	YMD	EJL		
APPROVED BY:	EJL		06/14/2019	ISSUE FOR PERMIT	LAB	YMD	EJL		
CDOT/APPROVED BY:		NO.	DATE	REVISIONS	DES.	DRW.	CHK.	DCCO	CDOT

MILHOUSE
333 South Wabash Avenue
Suite 2901
Chicago, IL 60604
t 312.994.8701
f 312.987.0071
www.milhouseinc.com

PERKINS+WILL
The Wrigley Building
410 North Michigan Ave.
Suite 1600
Chicago, IL 60611
t 312.755.0770
f 312.755.0775
www.perkinswill.com

CDOT
CHICAGO DEPARTMENT OF TRANSPORTATION
DIVISION OF ENGINEERING

154 N DAMEN AVE - DAMEN GREEN LINE STATION

PROPOSED SIGNAGE AND PAVEMENT MARKING

CDOT PROJECT D-7-135

DATE: 01/27/2020

SPEC. NO.

DRAWING NO. C80-02

REVISION NO.

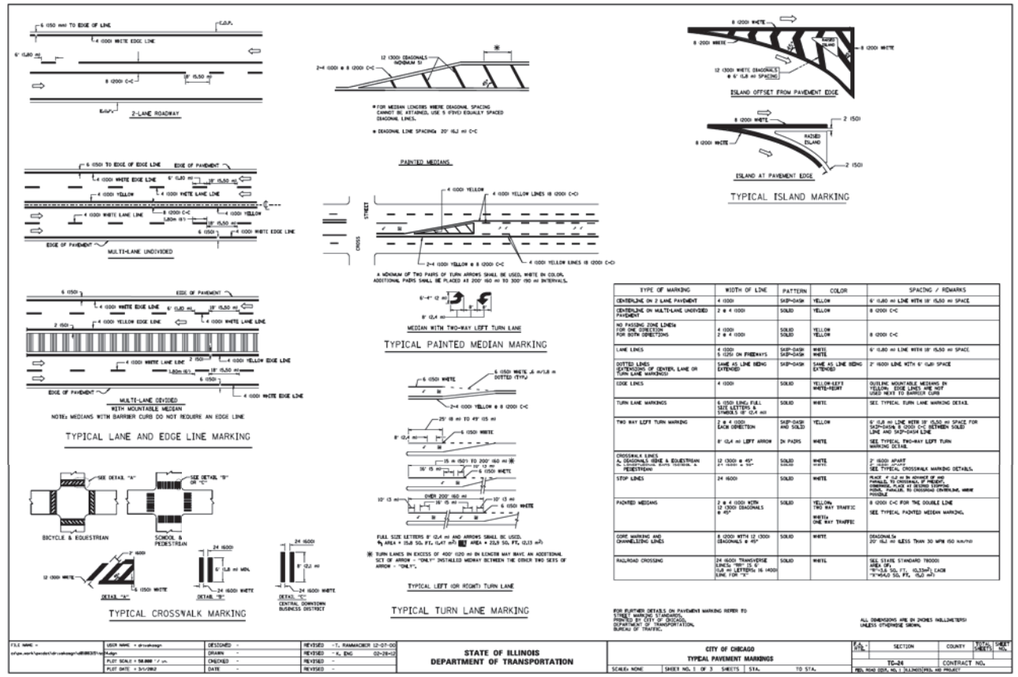

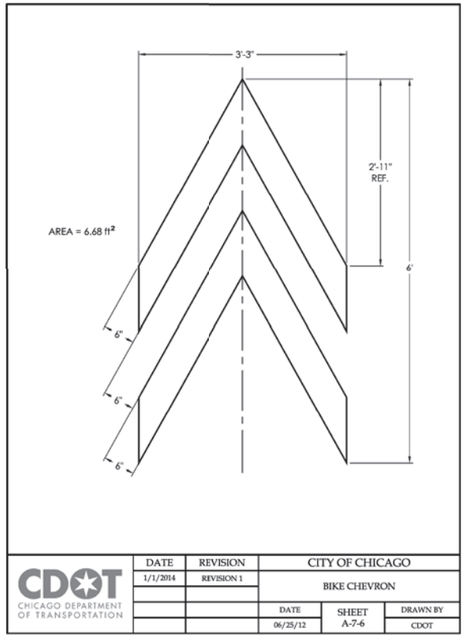

CDOT CHICAGO DEPARTMENT OF TRANSPORTATION	DATE	REVISION	CITY OF CHICAGO
	1/1/2014	REVISION 1	BIKE CHEVRON
		DATE 06/25/12	SHEET A-7-6 / DRAWN BY CDOT

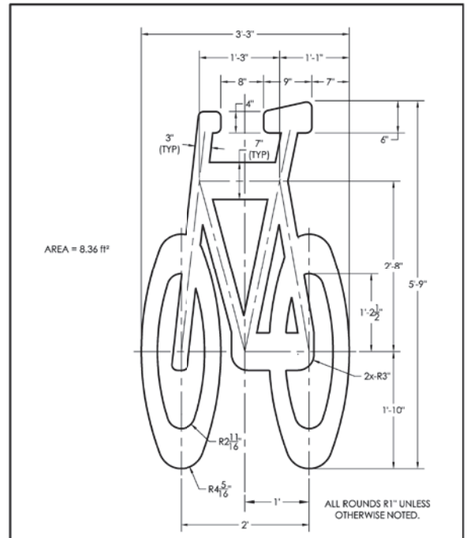

CDOT CHICAGO DEPARTMENT OF TRANSPORTATION	DATE	REVISION	CITY OF CHICAGO
	1/1/2014	REVISION 1	6' BIKE SYMBOL
		DATE 06/25/12	SHEET A-7-2 / DRAWN BY CDOT

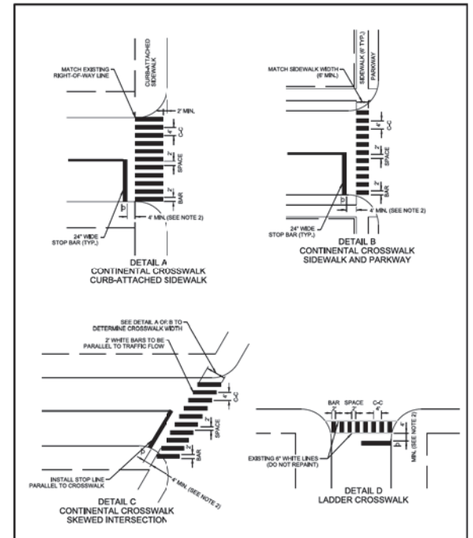

CDOT CHICAGO DEPARTMENT OF TRANSPORTATION	DATE	REVISION	CITY OF CHICAGO
	1/1/2014	REVISION 1	CROSSWALK MARKING DETAIL
		DATE 06/25/12	SHEET A-7-1A / DRAWN BY CDOT

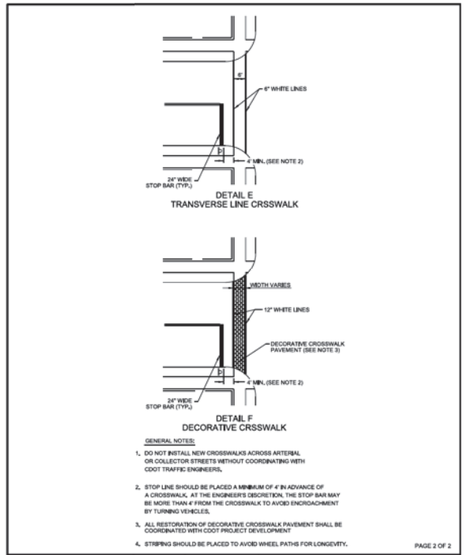

CDOT CHICAGO DEPARTMENT OF TRANSPORTATION	DATE	REVISION	CITY OF CHICAGO
	1/1/2014	REVISION 1	CROSSWALK MARKING DETAIL
		DATE 06/25/12	SHEET A-7-1B / DRAWN BY CDOT

DESIGN BY:	YA		01/27/2020	ISSUE FOR BID	YA	YMD	EJL		
DRAWN BY:	ML		10/04/2019	ISSUE FOR OUC EFP	CJB	YMD	EJL		
CHECKED BY:	EJL		06/14/2019	ISSUE FOR 100% DESIGN	LAB	YMD	EJL		
APPROVED BY:	EJL		06/14/2019	ISSUE FOR PERMIT	LAB	YMD	EJL		
CDOT/APPROVED BY:		NO.	DATE	REVISIONS	DES.	DRW.	CHK.	DCCO	CDOT

MILHOUSE
333 South Wabash Avenue
Suite 2901
Chicago, IL 60604
t 312.994.8701
f 312.987.0071
www.milhouseinc.com

PERKINS+WILL
The Wrigley Building
410 North Michigan Ave.
Suite 1600
Chicago, IL 60611
t 312.755.0770
f 312.755.0775
www.perkinswill.com

CDOT
CHICAGO DEPARTMENT OF TRANSPORTATION
DIVISION OF ENGINEERING

154 N DAMEN AVE - DAMEN GREEN LINE STATION

PAVEMENT MARKING DETAILS

CDOT PROJECT D-7-135 | DATE: 01/27/2020

SPEC. NO.

DRAWING NO. C80-03

REVISION NO.

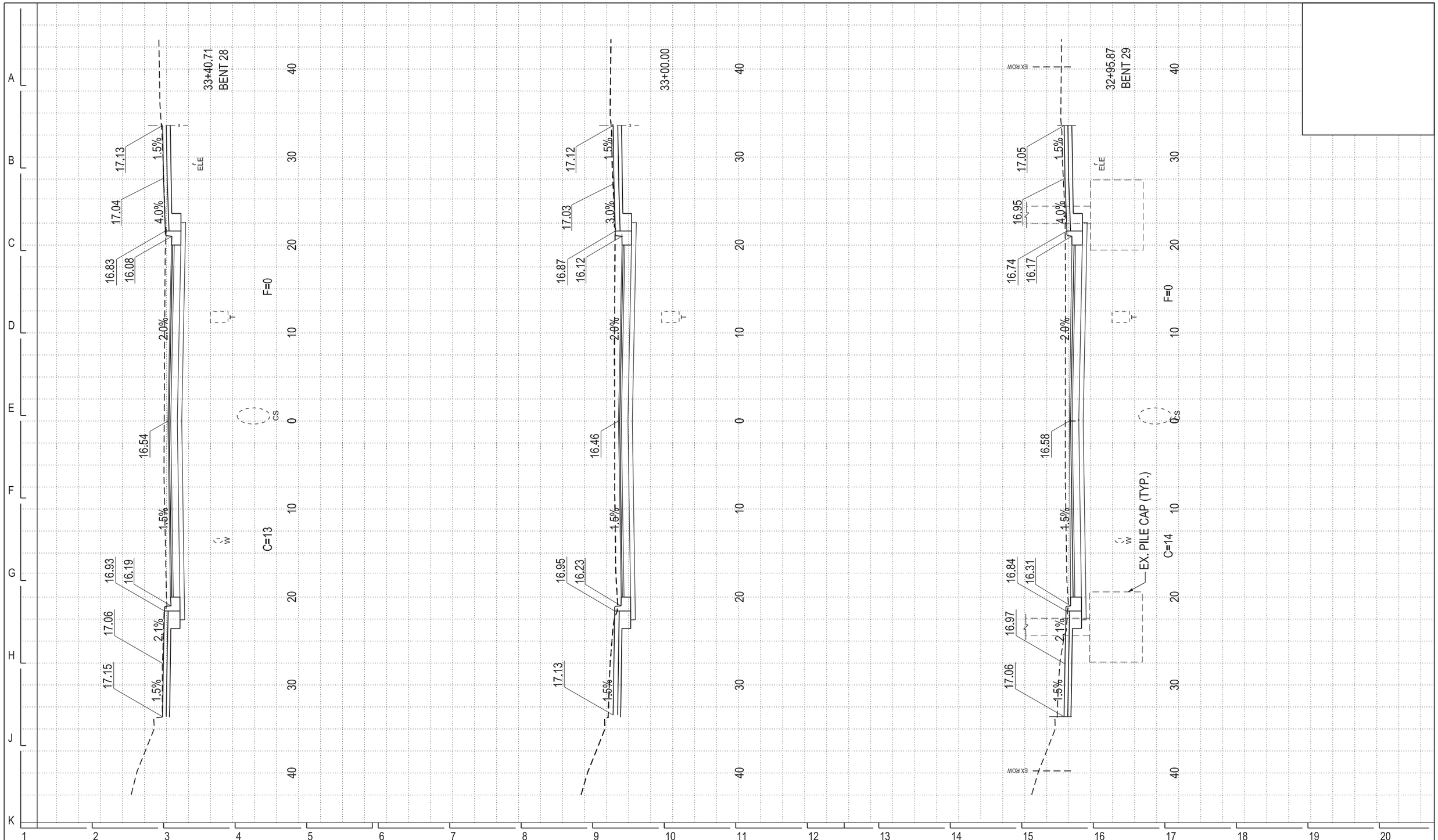

DESIGN BY:	YA		01/27/2020	ISSUE FOR BID	YA	YMD	EJL		
DRAWN BY:	ML		10/04/2019	ISSUE FOR OUC EFP	CJB	YMD	EJL		
CHECKED BY:	EJL		06/14/2019	ISSUE FOR 100% DESIGN	LAB	YMD	EJL		
APPROVED BY:	EJL		06/14/2019	ISSUE FOR PERMIT	LAB	YMD	EJL		
CDOT/APPROVED BY:		NO.	DATE	REVISIONS	DES.	DRW.	CHK.	DCCO	CDOT

MILHOUSE
333 South Wabash Avenue
Suite 2901
Chicago, IL 60604
t 312.994.8701
f 312.987.0071
www.milhouseinc.com

PERKINS+WILL
The Wrigley Building
410 North Michigan Ave.
Suite 1600
Chicago, IL 60611
t 312.755.0770
f 312.755.0775
www.perkinswill.com

CDOT
CHICAGO DEPARTMENT OF TRANSPORTATION
DIVISION OF ENGINEERING

154 N DAMEN AVE - DAMEN GREEN LINE STATION

CROSS SECTIONS

CDOT PROJECT D-7-135

DATE: 01/27/2020

SPEC. NO.

DRAWING NO. C90-01

REVISION NO.

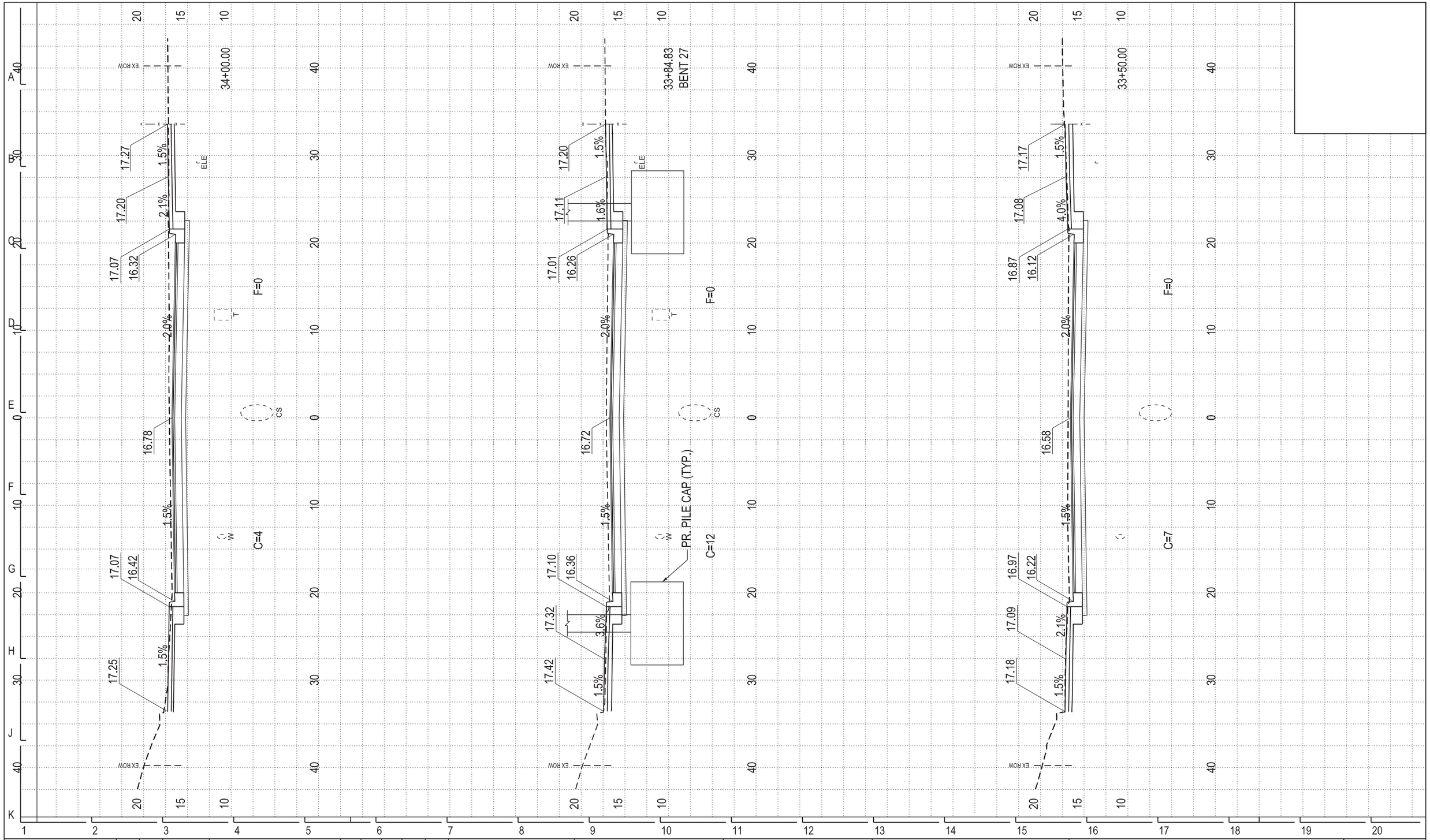

DESIGN BY:	YA		01/27/2020	ISSUE FOR BID	YA	YMD	EJL		
DRAWN BY:	ML		10/04/2019	ISSUE FOR OUC EFP	CJB	YMD	EJL		
CHECKED BY:	EJL		06/14/2019	ISSUE FOR 100% DESIGN	LAB	YMD	EJL		
APPROVED BY:	EJL		06/14/2019	ISSUE FOR PERMIT	LAB	YMD	EJL		
CDOT/APPROVED BY:		NO.	DATE	REVISIONS	DES.	DRW.	CHK.	DCCO	CDOT

MILHOUSE
333 South Wabash Avenue
Suite 2901
Chicago, IL 60604
t 312.994.8701
f 312.987.0021
www.milhouseinc.com

PERKINS+WILL
The Wrigley Building
410 North Michigan Ave.
Suite 1600
Chicago, IL 60611
t 312.755.0770
f 312.755.0775
www.perkinswill.com

CDOT
CHICAGO DEPARTMENT OF TRANSPORTATION
DIVISION OF ENGINEERING

154 N DAMEN AVE - DAMEN GREEN LINE STATION

CROSS SECTIONS

CDOT PROJECT D-7-135

DATE: 01/27/2020

SPEC. NO.

DRAWING NO. C90-02

REVISION NO.

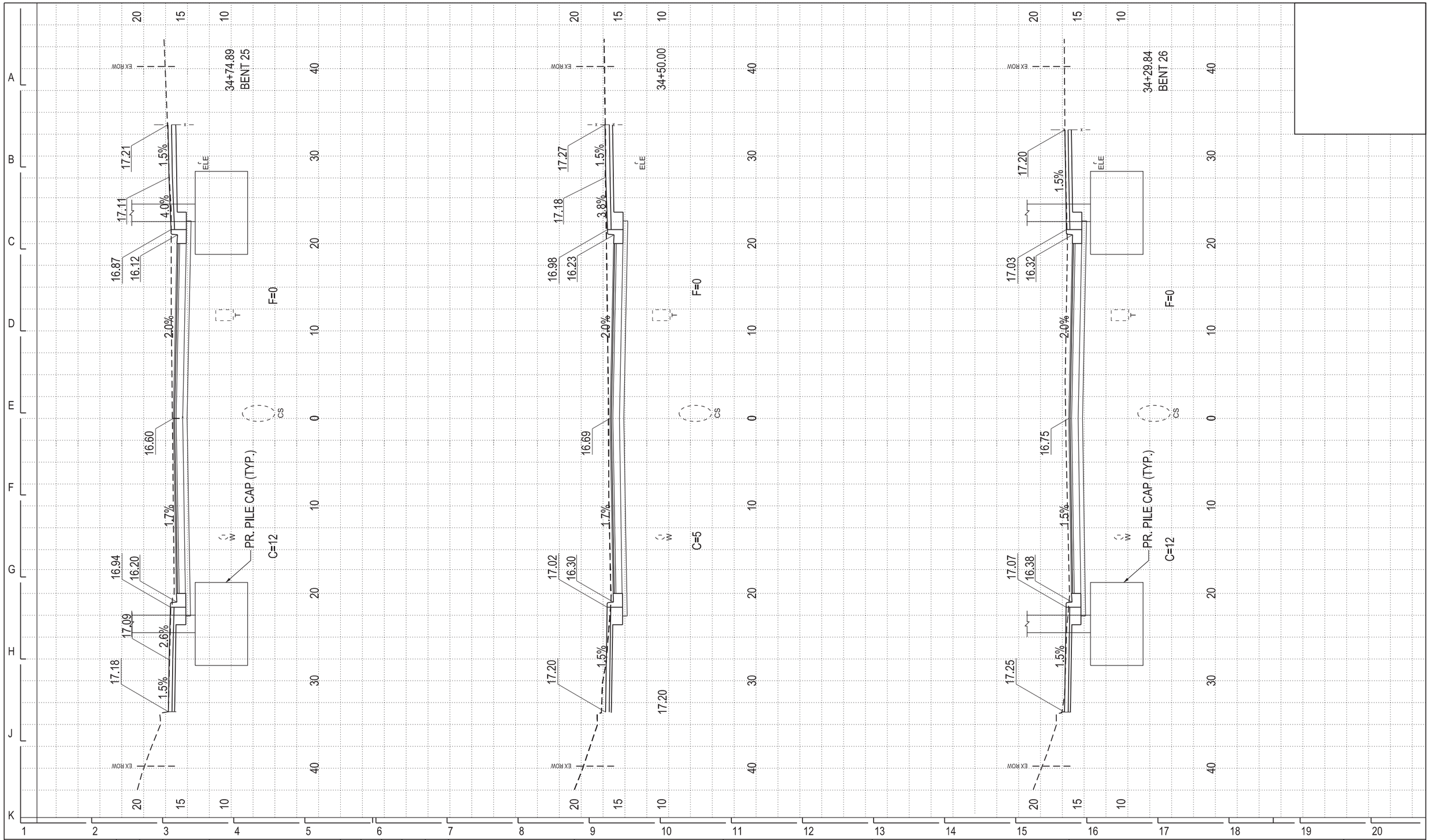

DESIGN BY:	YA		01/27/2020	ISSUE FOR BID	YA	YMD	EJL		
DRAWN BY:	ML		10/04/2019	ISSUE FOR OUC EFP	CJB	YMD	EJL		
CHECKED BY:	EJL		06/14/2019	ISSUE FOR 100% DESIGN	LAB	YMD	EJL		
APPROVED BY:	EJL		06/14/2019	ISSUE FOR PERMIT	LAB	YMD	EJL		
CDOT/APPROVED BY:		NO.	DATE	REVISIONS	DES.	DRW.	CHK.	DCCO	CDOT

MILHOUSE
333 South Wabash Avenue
Suite 2901
Chicago, IL 60604
t 312.994.8701
f 312.987.0071
www.milhouseinc.com

PERKINS+WILL
The Wrigley Building
410 North Michigan Ave.
Suite 1600
Chicago, IL 60611
t 312.755.0770
f 312.755.0775
www.perkinswill.com

CDOT
CHICAGO DEPARTMENT OF TRANSPORTATION
DIVISION OF ENGINEERING

154 N DAMEN AVE - DAMEN GREEN LINE STATION

CROSS SECTIONS

CDOT PROJECT D-7-135

DATE: 01/27/2020

SPEC. NO.

DRAWING NO. C90-03

REVISION NO.

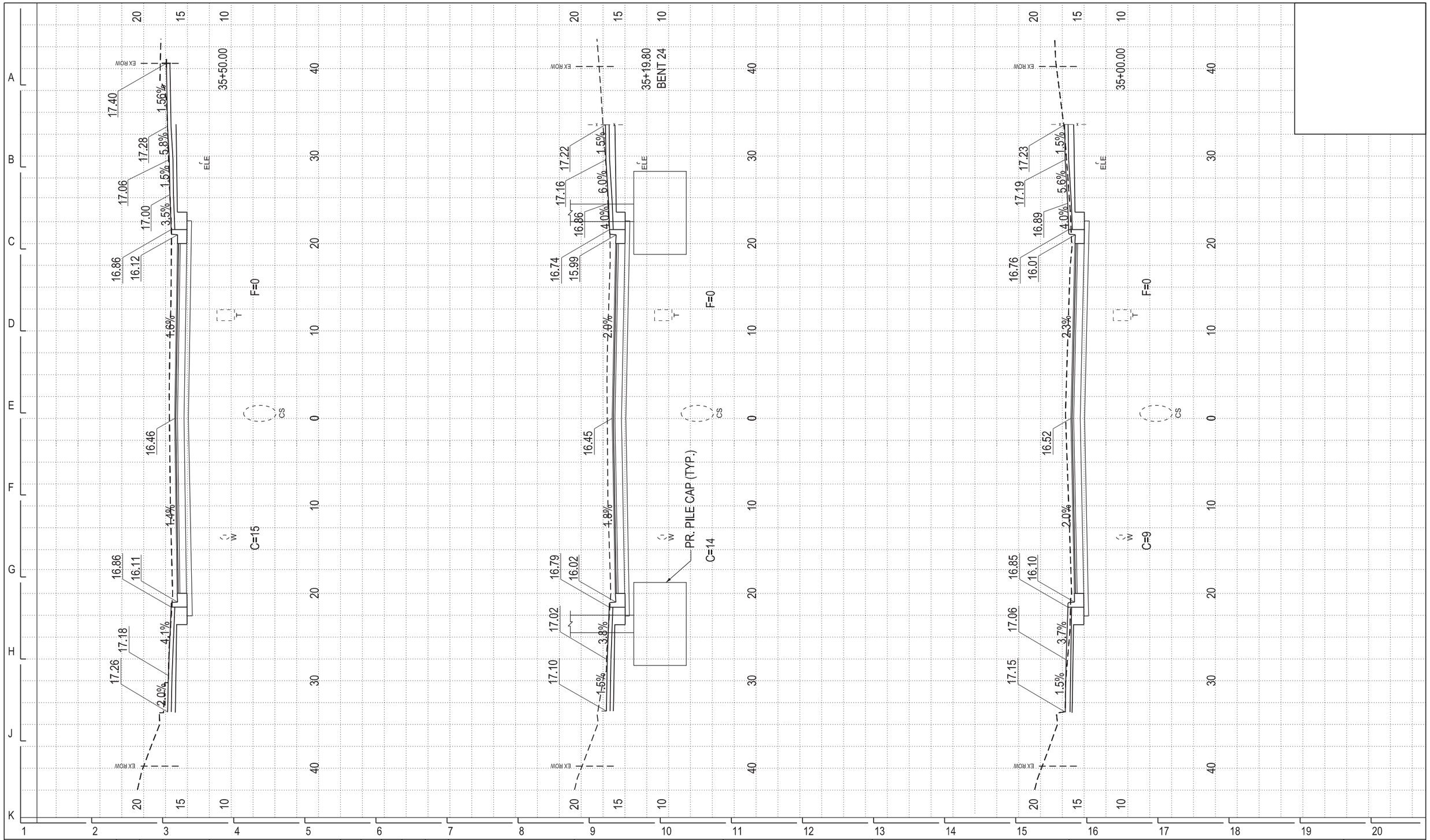

DESIGN BY:	YA		01/27/2020	ISSUE FOR BID	YA	YMD	EJL		
DRAWN BY:	ML		10/04/2019	ISSUE FOR OUC EFP	CJB	YMD	EJL		
CHECKED BY:	EJL		06/14/2019	ISSUE FOR 100% DESIGN	LAB	YMD	EJL		
APPROVED BY:	EJL		06/14/2019	ISSUE FOR PERMIT	LAB	YMD	EJL		
CDOT/APPROVED BY:		NO.	DATE	REVISIONS	DES.	DRW.	CHK.	DCCO	CDOT

MILHOUSE
333 South Wabash Avenue
Suite 2901
Chicago, IL 60604
t 312.994.8701
f 312.987.0071
www.milhouseinc.com

PERKINS+WILL
The Wrigley Building
410 North Michigan Ave.
Suite 1600
Chicago, IL 60611
t 312.755.0770
f 312.755.0775
www.perkinswill.com

CDOT
CHICAGO DEPARTMENT OF TRANSPORTATION
DIVISION OF ENGINEERING

154 N DAMEN AVE - DAMEN GREEN LINE STATION

CROSS SECTIONS

CDOT PROJECT D-7-135

DATE: 01/27/2020

SPEC. NO.

DRAWING NO. C90-04

REVISION NO.

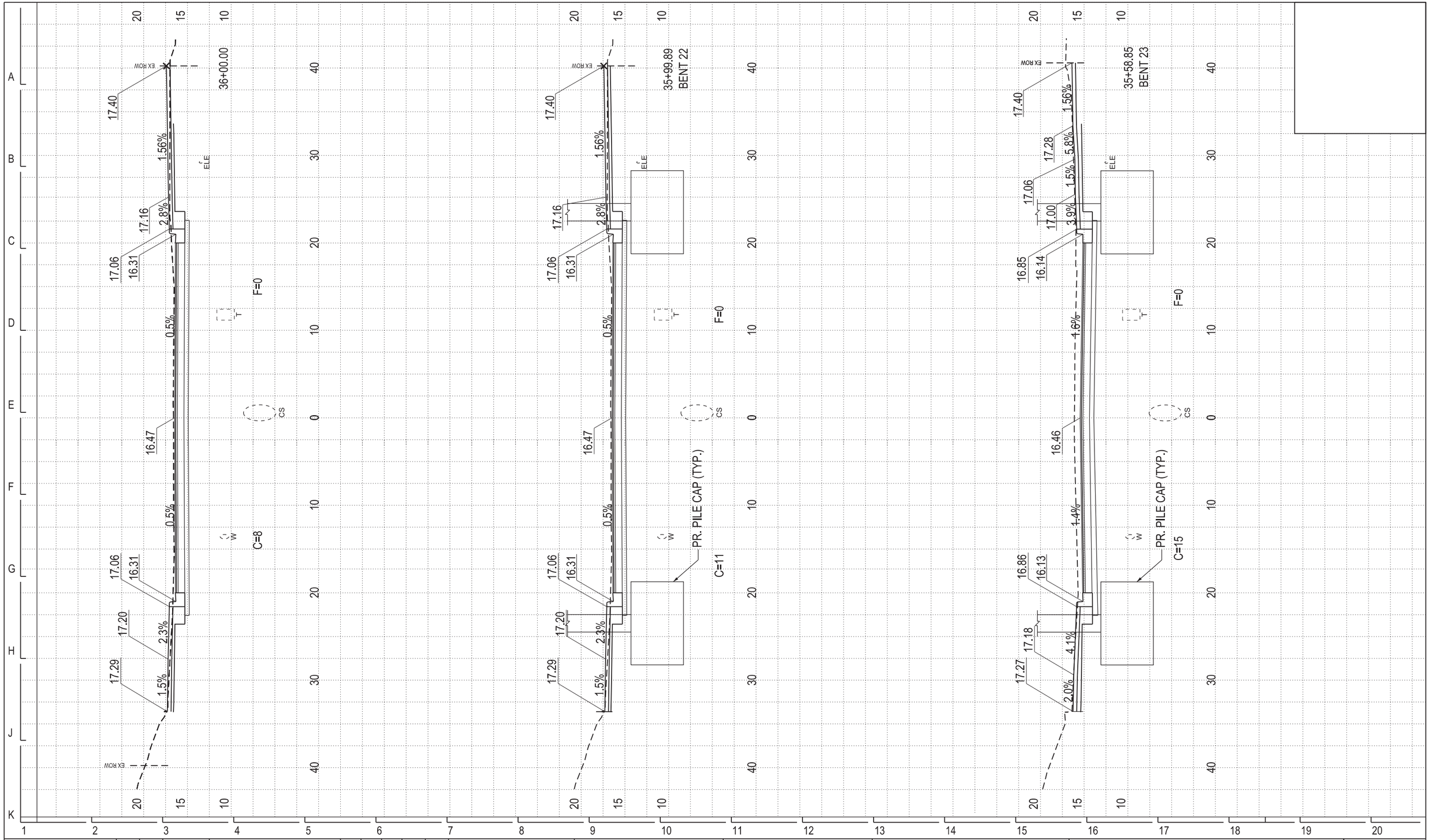

DESIGN BY:	YA		01/27/2020	ISSUE FOR BID	YA	YMD	EJL		
DRAWN BY:	ML		10/04/2019	ISSUE FOR OUC EFP	CJB	YMD	EJL		
CHECKED BY:	EJL		06/14/2019	ISSUE FOR 100% DESIGN	LAB	YMD	EJL		
APPROVED BY:	EJL		06/14/2019	ISSUE FOR PERMIT	LAB	YMD	EJL		
CDOT/APPROVED BY:		NO.	DATE	REVISIONS	DES.	DRW.	CHK.	DCCO	CDOT

MILHOUSE
333 South Wabash Avenue
Suite 2901
Chicago, IL 60604
t 312.994.8701
f 312.987.0071
www.milhouseinc.com

PERKINS+WILL
The Wrigley Building
410 North Michigan Ave.
Suite 1600
Chicago, IL 60611
t 312.755.0770
f 312.755.0775
www.perkinswill.com

CDOT
CHICAGO DEPARTMENT OF TRANSPORTATION
DIVISION OF ENGINEERING

154 N DAMEN AVE - DAMEN GREEN LINE STATION

CROSS SECTIONS

CDOT PROJECT D-7-135

DATE: 01/27/2020

SPEC. NO.

DRAWING NO. C90-05

REVISION NO.

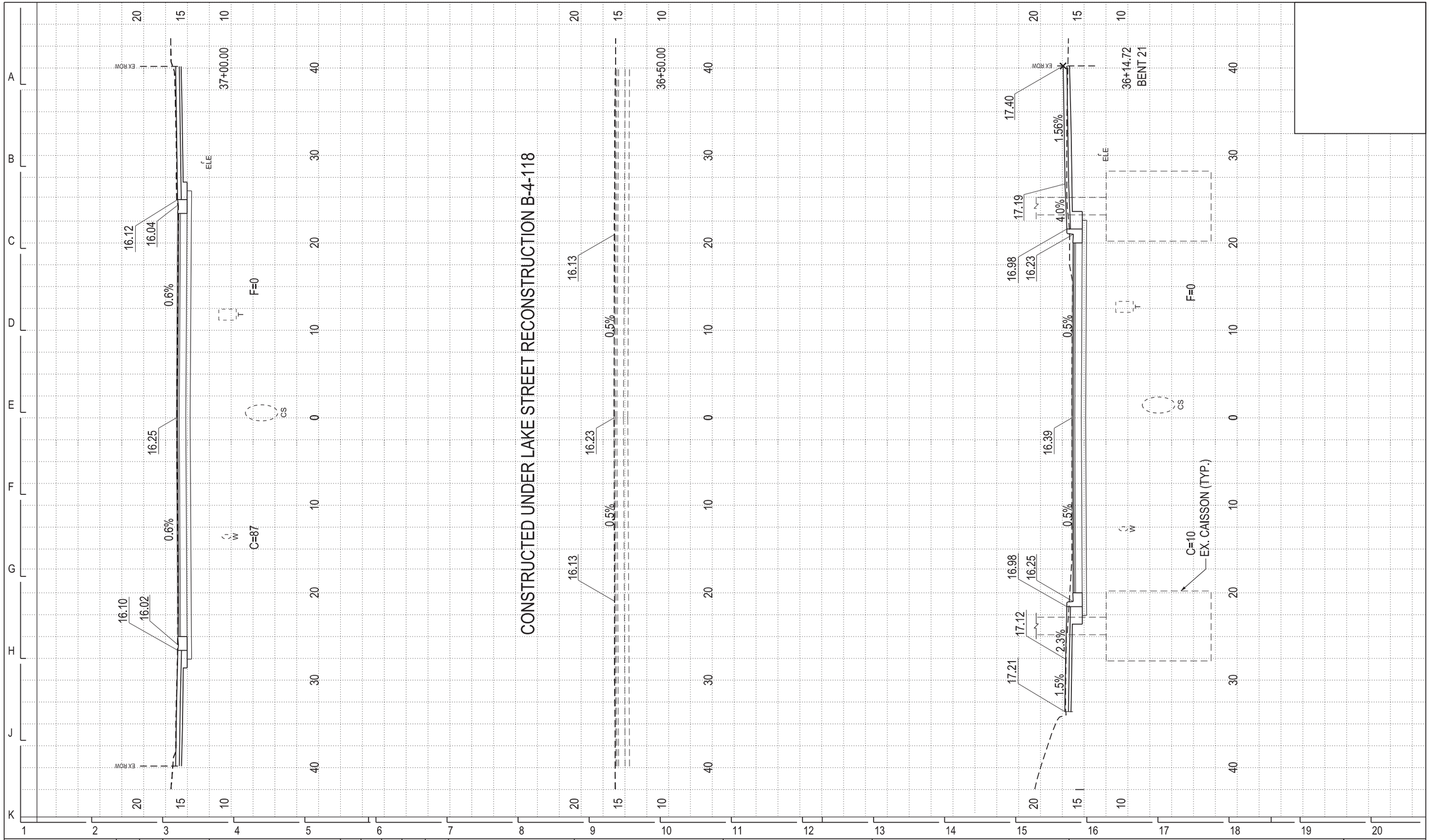

DESIGN BY:	YA		01/27/2020	ISSUE FOR BID	YA	YMD	EJL		
DRAWN BY:	ML		10/04/2019	ISSUE FOR OUC EFP	CJB	YMD	EJL		
CHECKED BY:	EJL		06/14/2019	ISSUE FOR 100% DESIGN	LAB	YMD	EJL		
APPROVED BY:	EJL		06/14/2019	ISSUE FOR PERMIT	LAB	YMD	EJL		
CDOT/APPROVED BY:		NO.	DATE	REVISIONS	DES.	DRW.	CHK.	DCCO	CDOT

MILHOUSE
333 South Wabash Avenue
Suite 2901
Chicago, IL 60604
t 312.994.8701
f 312.987.0071
www.milhouseinc.com

PERKINS+WILL
The Wrigley Building
410 North Michigan Ave.
Suite 1600
Chicago, IL 60611
t 312.755.0770
f 312.755.0775
www.perkinswill.com

CDOT
CHICAGO DEPARTMENT OF TRANSPORTATION
DIVISION OF ENGINEERING

154 N DAMEN AVE - DAMEN GREEN LINE STATION

CROSS SECTIONS

CDOT PROJECT D-7-135

DATE: 01/27/2020 DES. DRW. CHK.

SPEC. NO.

DRAWING NO. C90-06

REVISION NO.

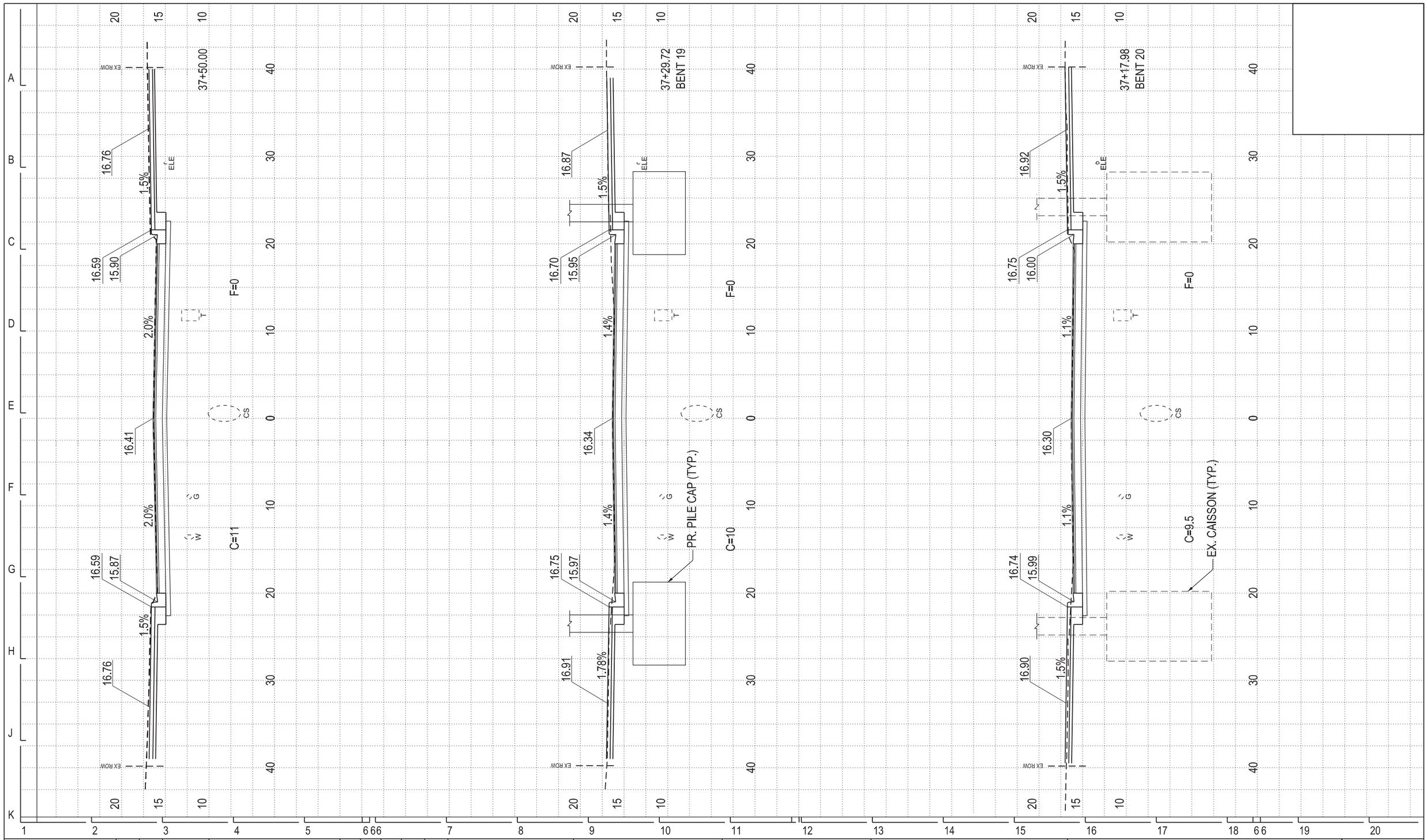

DESIGN BY:	YA		01/27/2020	ISSUE FOR BID	YA	YMD	EJL		
DRAWN BY:	ML		10/04/2019	ISSUE FOR OUC EFP	CJB	YMD	EJL		
CHECKED BY:	EJL		06/14/2019	ISSUE FOR 100% DESIGN	LAB	YMD	EJL		
APPROVED BY:	EJL		06/14/2019	ISSUE FOR PERMIT	LAB	YMD	EJL		
CDOT/APPROVED BY:		NO.	DATE	REVISIONS	DES.	DRW.	CHK.	DCCO	CDOT

MILHOUSE
333 South Wabash Avenue
Suite 2901
Chicago, IL 60604
t 312.994.8701
f 312.987.0071
www.milhouseinc.com

PERKINS+WILL
The Wrigley Building
410 North Michigan Ave.
Suite 1600
Chicago, IL 60611
t 312.755.0770
f 312.755.0775
www.perkinswill.com

CDOT
CHICAGO DEPARTMENT OF TRANSPORTATION
DIVISION OF ENGINEERING

154 N DAMEN AVE - DAMEN GREEN LINE STATION

CROSS SECTIONS

CDOT PROJECT D-7-135

DATE: 01/27/2020

SPEC. NO.

DRAWING NO. C90-07

REVISION NO.

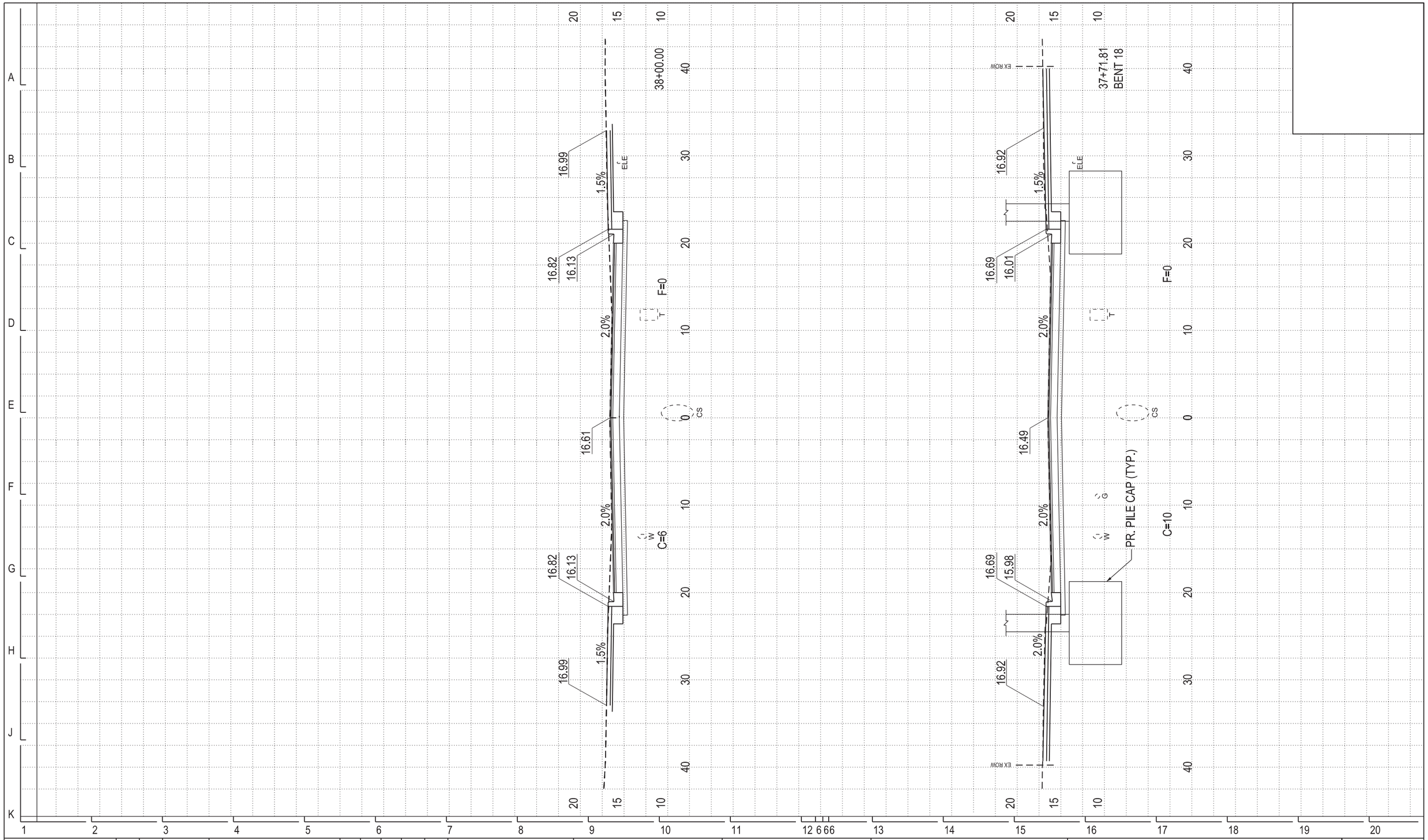

DESIGN BY:	YA		01/27/2020	ISSUE FOR BID	YA	YMD	EJL		
DRAWN BY:	ML		10/04/2019	ISSUE FOR OUC EFP	CJB	YMD	EJL		
CHECKED BY:	EJL		06/14/2019	ISSUE FOR 100% DESIGN	LAB	YMD	EJL		
APPROVED BY:	EJL		06/14/2019	ISSUE FOR PERMIT	LAB	YMD	EJL		
CDOT/APPROVED BY:		NO.	DATE	REVISIONS	DES.	DRW.	CHK.	DCCO	CDOT

MILHOUSE
333 South Wabash Avenue
Suite 2901
Chicago, IL 60604
t 312.994.8701
f 312.987.0071
www.milhouseinc.com

PERKINS+WILL
The Wrigley Building
410 North Michigan Ave.
Suite 1600
Chicago, IL 60611
t 312.755.0770
f 312.755.0775
www.perkinswill.com

CDOT
CHICAGO DEPARTMENT OF TRANSPORTATION
DIVISION OF ENGINEERING

154 N DAMEN AVE - DAMEN GREEN LINE STATION

CROSS SECTIONS

CDOT PROJECT D-7-135

DATE: 01/27/2020

SPEC. NO.

DRAWING NO. C90-08

REVISION NO.

ELECTRICAL GENERAL NOTES

1. ALL WORK FOR THIS CONTRACT MUST BE IN ACCORDANCE WITH THE NATIONAL ELECTRICAL CODE (NEC), CITY OF CHICAGO DIVISION OF ELECTRICAL OPERATIONS (DEO) STANDARDS, CHICAGO ELECTRICAL CODE, IDOT STANDARD SPECIFICATIONS ADOPTED APRIL 1, 2016, AND NEMA.

2. THE CONTRACTOR MUST PREPARE A PRELIMINARY SCHEDULE WHEN THE CONTRACT COMMENCES WHICH ESTABLISHES THE PROJECT DATES WHEN THE EXISTING AND TEMPORARY ELECTRICAL SERVICES WILL BE TRANSFERRED TO THE NEW PERMANENT SERVICES AS SHOWN ON THE DRAWINGS. THIS SCHEDULE MUST BE APPROVED BY THE CONTRACTOR AND RESIDENT ENGINEER, THEN FORWARDED IN WRITING TO THE CITY OF CHICAGO, DIVISION OF ELECTRICAL OPERATIONS (DEO) AND (COMED). SUBSEQUENT UPDATING OF THE SCHEDULE MUST BE FORWARDED TO THE ABOVE LISTED ENTITIES AS CHANGES OCCUR IN THE DATES, AT LEAST FIVE (5) WORKING DAYS BEFORE THE ELECTRICAL SERVICES ARE SCHEDULED TO BE TRANSFERRED. THE CONTRACTOR MUST NOTIFY THE CITY OF CHICAGO DEO AND COMED BY PHONE AND CONFIRM THE REQUEST IN WRITING. ALL ELECTRICAL SERVICE WORK DOCUMENTATION MUST BE FORWARDED TO THE CITY FOR REVIEW AND APPROVAL. THE CONTRACTOR MUST CONTACT THE FOLLOWING PERSONNEL PRIOR TO STARTING ANY WORK ON THE PRIMARY ELECTRICAL SERVICE EQUIPMENT:

   INSPECTIONAL SERVICES, CITY OF CHICAGO DIVISION OF ELECTRICAL OPERATIONS
   312-746-5048,
   MR. STEVE TRIBUZZI, COMED, MODIFICATIONS
   773-682-1521

   MR. JEFF CAIRNS, CHICAGO OFFICE OF EMERGENCY MANAGEMENT AND COMMUNICATION 312-746-9840
   MR. DAVID HILZTALER, AT&T
   312-977-7537
   MR. PABLO BREZMAN, JC DECAUX
   773-410-6200

3. A BURIED TELEPHONE DUCT CARRIES FIRE ALARM/POLICE COMMUNICATION SYSTEMS. THE CITY OF CHICAGO OFFICE OF EMERGENCY MANAGEMENT AND COMMUNICATION (OEMC) WILL PERFORM THE WORK ASSOCIATED WITH THE INSTALLATION AND REMOVAL OF ALL ALARM SYSTEM CABLE. THE CONTRACTOR MUST BE RESPONSIBLE FOR NOTIFYING THE OEMC, MR JEFF CAIRNS (312-746-9840) PRIOR TO THE COMMENCEMENT OF ALL WORK AND MUST COORDINATE ALL WORK ACTIVITIES SO AS NOT TO INTERFERE WITH THE WORK TO BE PERFORMED BY THE OEMC. REQUIRED COORDINATION OF WORK WITH THE OEMC WILL BE CONSIDERED INCIDENTAL TO THE CONTRACT AND NO ADDITIONAL COMPENSATION OR EXTENSIONS OF TIME WILL BE GRANTED ARISING FROM OR ATTRIBUTED TO SAID COORDINATION.

4. THE CONTRACTOR MUST COORDINATE ALL PROPOSED ELECTRICAL CONNECTIONS, LIGHTING UNITS, CONTROL EQUIPMENT, AND/OR ANY OTHER WORK DEEMED NECESSARY BY THE COMMISSIONER TO ASSURE THAT ANY FUTURE OR CONCURRENT CONTRACT WORK PROCEEDS AS SCHEDULED AND WITHOUT DELAY. THIS COORDINATION WILL BE INCLUDED IN THE COST OF THE CONTRACT.

5. THE CONTRACTOR MUST COORDINATE ALL WORK AND MATERIALS WITH SPECIAL ATTENTION TO ALL OTHER CONSTRUCTION CONTRACTS. THIS WORK WILL BE INCLUDED IN THE COST OF THE CONTRACT AND SEPARATE PAYMENT WILL NOT BE MADE.

6. THE CONTRACTOR MUST REFER TO THE CIVIL DRAWINGS FOR LOCATIONS OF EXISTING EQUIPMENT AND UTILITIES NOT SPECIFICALLY SHOWN ON ELECTRICAL DRAWINGS.

7. THE CONTRACTOR MUST REFER TO THE TRAFFIC CONTROL DRAWINGS AND STATE STANDARDS FOR TRAFFIC CONTROL RELATED TO STREET LIGHTING AND TRAFFIC SIGNAL WORK.

8. THE CONTRACTOR MUST COORDINATE ALL WORK WITH THE GENERAL CIVIL, SEWER AND GENERAL TRAFFIC CONTROL NOTES ON DRAWINGS AND AND/OR SPECIFICATIONS.

9. THE CONTRACTOR MUST COORDINATE WITH ROADWAY, SEWER, PIPING, AND TRAFFIC CONTROL CONTRACTORS FOR STAGING AND SEQUENCE OF INSTALLATIONS, BACKFILL, AND/OR CONSTRUCTION SCHEDULING.

10. ALL CITY OF CHICAGO LIGHTING EQUIPMENT REMOVED AS PART OF THIS CONTRACT WILL REMAIN THE PROPERTY OF THE CITY AND MUST BE DELIVERED TO CITY'S STORAGE FACILITY LOCATED WITHIN THE CITY LIMITS IN ACCORDANCE WITH THE CONTRACT SPECIFICATION, UNLESS NOTED OTHERWISE.

11. RECORD DRAWINGS SHOWING EXISTING STREET LIGHTING INSTALLATIONS AND CABINET LOCATIONS ARE AVAILABLE FOR THE CONTRACTOR'S INFORMATION AT THE OFFICES OF CITY OF CHICAGO DEPARTMENT OF STREETS AND SANITATION, DIVISION OF ELECTRICAL OPERATIONS.

12. ALL EXISTING AREAS THAT ARE DAMAGED AS A PART OF THIS WORK, INCLUDING BUT NOT LIMITED TO FENCING, CURBS AND GUTTERS, AND SIDEWALKS, WHERE RESTORATION IS NOT COVERED BY THE APPLICABLE CONTRACT PAY ITEMS, MUST BE RESTORED TO THE SATISFACTION OF THE COMMISSIONER. THIS WORK WILL BE INCLUDED IN THE COST OF THIS CONTRACT AND SEPARATE PAYMENT WILL NOT BE MADE.

13. ALL NEW ELECTRICAL EQUIPMENT INSTALLED UNDER THIS CONTRACT MUST BE DONE IN SUCH A MANNER AS NOT TO DAMAGE THE EXISTING LANDSCAPE (TREES, BUSHES, ETC.) DURING THE PROGRESSION OF WORK. IF THE CONTRACTOR HAS A CONFLICT WITH THE EXISTING LANDSCAPE HE MUST STOP THE WORK, IMMEDIATELY NOTIFY THE RESIDENT ENGINEER AND THE COMMISSIONER, AND WAIT FOR RESOLUTION.

14. THE EXISTING ROADWAY LIGHTING SYSTEM WITHIN THE CONSTRUCTION LIMITS OF THE PROJECT MUST REMAIN IN OPERATION FOR THE DURATION OF THIS PROJECT UNTIL SUCH TIME THAT THE NEW LIGHTING SYSTEM HAS BEEN INSTALLED, ENERGIZED, TESTED, ADJUSTED, AND ACCEPTED BY THE COMMISSIONER. THE COST OF THIS WORK WILL BE INCLUDED AS PART OF THE MAINTAIN EXISTING LIGHTING SYSTEM PAY ITEM AND SEPARATE PAYMENT WILL NOT BE MADE.

15. WORK FOR ELECTRICAL SYSTEMS MUST BE COMPLETE, APPROVED, AND FULLY OPERATIONAL BEFORE A FINAL ACCEPTANCE INSPECTION FOR THE WHOLE PROJECT CAN BE SCHEDULED. LIGHTING CONTROLLERS MAY NOT BE TRANSFERRED IN GROUPS OR INDIVIDUALLY TO THE CITY FOR MAINTENANCE PURPOSES PRIOR TO CONTRACT COMPLETION UNLESS OTHERWISE DIRECTED BY THE COMMISSIONER.

16. AT THE COMMENCEMENT OF CONTRACTOR ACTIVITIES, ELECTRICAL OR OTHERWISE, THE CONTRACTOR WILL BE RESPONSIBLE FOR THE PROPER OPERATION AND MAINTENANCE OF ALL EXISTING LIGHTING SYSTEMS IN ACCORDANCE WITH THE STANDARD SPECIFICATIONS, UNLESS OTHERWISE DIRECTED BY THE COMMISSIONER.

17. ALL PROPOSED DUCT BANKS, CONDUITS, JUNCTION BOXES, AND APPURTENANCES ARE ILLUSTRATED DIAGRAMMATICALLY. THE ACTUAL LOCATIONS IN THE FIELD MUST BE APPROVED BY THE COMMISSIONER.

18. THE EXISTING STREET LIGHTING CONTROLLERS IDENTIFIED ON THE DRAWINGS AS "REMOVE AND SALVAGE", MUST REMAIN IN SERVICE UNTIL THE NEW STREET LIGHTING CONTROLLERS ARE INSTALLED AND READY TO BE ENERGIZED. ONCE THE EXISTING STREET LIGHTING CONTROLLER HAVE BEEN DE-ENERGIZED, THE CONTRACTOR WILL HAVE ONE DAY (DAWN TO DUSK) TO ENERGIZE THE NEW STREET LIGHTING CONTROLLERS.

19. DE-ENERGIZING OF EXISTING LIGHTING UNITS WILL BE INCLUDED IN THE COST OF THE REMOVAL OF EXISTING LIGHTING UNITS PAY ITEM WORK. SEPARATE PAYMENT WILL NOT BE MADE.

20. DISCONNECTION AND REMOVAL OF EXISTING BEAM CLAMPS, HANGERS, BRACKETS, CONDUITS, WIRES IN CONDUIT, AND AERIAL CABLES ATTACHED TO STRUCTURE AND TO EXISTING LIGHTING UNITS WILL BE INCLUDED IN THE COST OF THE REMOVAL OF EXISTING LIGHTING UNITS, SEPARATE PAYMENT WILL NOT BE MADE.

21. REMOVAL OF EXISTING ELECTRICAL CABLES FEEDING EACH OF THE EXISTING LIGHTING/SIGNAL UNITS WILL BE INCLUDED IN THE COST OF THE REMOVAL OF THE EXISTING LIGHTING/SIGNAL UNITS AND SEPARATE PAYMENT WILL NOT BE MADE.

22. EXISTING EMBEDDED AND UNDERGROUND RACEWAYS BETWEEN EXISTING LIGHTING UNITS OR EXISTING EQUIPMENT MUST BE REMOVED, UNLESS NOTED OTHERWISE.

23. THE CONTRACTOR MUST COORDINATE WITH THE COMMISSIONER AND ALL CONCERNED ORGANIZATIONS AS TO POSSIBLE REMOVAL, REPLACEMENT, DISPLACEMENT, AND/OR METHOD OF AVOIDANCE OF EXISTING OBSTRUCTIONS OR PROPOSED CONSTRUCTION ELEMENTS REQUIRED BY NEW INSTALLATIONS.

24. THE CONTRACTOR MUST PROVIDE AND INSTALL ANY ADDITIONAL TEMPORARY ELECTRICAL EQUIPMENT CONNECTIONS AS NECESSARY TO MAINTAIN EXISTING LIGHTING CONTINUITY AS THE PROPOSED WORK FOR INSTALLATION AND REMOVAL OF EXISTING LIGHTING EQUIPMENT PROGRESS. THE COST OF THIS WORK WILL BE INCLUDED IN MAINTAIN EXISTING LIGHTING SYSTEM.

25. WHERE THE CONTRACTOR'S EXCAVATION MEETS AN OBSTRUCTION OR EXISTING FOUNDATION. THE CONTRACTOR MUST NOTIFY THE COMMISSIONER FOR DIRECTION IN WRITING PRIOR TO FURTHER EXCAVATION. THE CONTRACTOR MUST RESTORE ANY DAMAGE TO EXISTING SYSTEMS OR UTILITIES AND REMOVE EXISTING OBSTRUCTIONS AND FOUNDATIONS TO THE SATISFACTION OF THE COMMISSIONER. THIS WORK WILL BE INCLUDED IN THE APPROPRIATE EXCAVATION PAY ITEM.

26. THE CONTRACTOR MUST REFER TO ALL CITY OF CHICAGO EDISON SERVICE ATLAS DRAWINGS, TRAFFIC SIGNAL DRAWINGS, COMED DRAWINGS, AND AT&T DRAWINGS FOR POSSIBLE UNDERGROUND WIRES, CABLES, CONDUITS, DUCT RUNS, EQUIPMENT, OR DEVICES.

27. THE CONTRACTOR MUST BE RESPONSIBLE FOR MARKING THE PROPOSED LOCATION OF ALL CITY LIGHT POLES, LUMINARIES, CABINETS, JUNCTION BOXES CONDUIT ROUTES, AND OTHER EQUIPMENT AND ITEMS FOR A CONTRACTOR REQUESTED PRE CONSTRUCTION INSPECTION BY THE COMMISSIONER AND THE CITY OF CHICAGO DIVISION OF ELECTRICAL OPERATIONS. THE EXACT LOCATIONS OF ALL ITEMS MUST BE APPROVED BY THE CITY OF CHICAGO DIVISION OF ELECTRICAL OPERATIONS PRIOR TO STARTING WORK. ANY WORK INSTALLED WITHOUT LOCATION APPROVAL FROM THE CITY OF CHICAGO DIVISION OF ELECTRICAL OPERATIONS WILL BE SUBJECT TO CORRECTIVE ACTION AT THE CONTRACTOR'S EXPENSE.

28. THE CONTRACTOR MUST IDENTIFY EACH ELECTRIC CABLE ASSEMBLY FOR STREET LIGHTING. CABLES SHALL BE TAGGED IN ALL HANDHOLES, MANHOLES, TRANSCLOSURE CABINETS, AND LIGHT POLE BASES.

29. CONDUIT STUBOUTS IN EQUIPMENT FOUNDATIONS WILL NOT BE MEASURED FOR PAYMENT, BUT WILL BE CONSIDERED AS INCLUDED IN THE APPLICABLE FOUNDATION PAY ITEM. REFER TO SPECIFICATIONS.

30. THE QUANTITIES OF RIGID GALVANIZED STEEL CONDUIT AND PVC, WHERE INDICATED ON THESE PLAN DRAWINGS, ARE APPROXIMATIONS ONLY. THE CONTRACTOR MUST FIELD VERIFY ALL LENGTHS AND MUST INSTALL RACEWAYS IN COMPLIANCE WITH THE SPECIFIED REQUIREMENTS.

31. THE ELECTRIC CABLE PHASE AND NEUTRAL CONDUCTORS MUST BE RUN CONTINUOUS WITHOUT ANY UNDERGROUND SPLICES, JUNCTION BOX SPLICES, PULL BOX SPLICES, HANDHOLE SPLICES, OR MANHOLE SPLICES. SPLICES OF ELECTRIC CABLE PHASE AND NEUTRAL CONDUCTORS WILL BE PERMITTED ONLY IN THE BASE OF THE PROPOSED LIGHT POLES AND CONTROLLERS UNLESS NOTED OTHERWISE. THIS WORK WILL BE INCLUDED IN THE ELECTRIC CABLE PAY ITEM AND SEPARATE PAYMENT WILL NOT BE MADE.

32. THE CONTRACTOR MUST DETERMINE WHICH CABLES ARE TO BE ROUTED IN EACH CELL WHERE MULTIPLE EMBEDDED CONDUITS ARE INDICATED. CONDUCTORS DEDICATED TO A CIRCUIT MUST NOT BE SEPARATED. DETERMINATION OF WHICH FEEDER IS TO BE PULLED THROUGH A SPECIFIC CELL SHOULD BE BASED ON SIMPLICITY OF CABLE PULL, LEAST AMOUNT OF CROSS-OVERS IN MANHOLES OR HANDHOLES, AND FUTURE CABLE REPLACEMENT REQUIRED.

33. WHERE DUCT RUN OR EMBEDDED CONDUIT INSTALLATIONS MUST DEVIATE FROM THAT SHOWN ON DRAWINGS AND DEVIATIONS INCREASE DUCT LENGTH OR ADD BENDS BETWEEN MANHOLES/HANDHOLES OR DEVICES, THE CONTRACTOR MUST NOTIFY THE COMMISSIONER AND PRODUCE EVIDENCE THAT CABLES CAN BE PULLED THROUGH THE EXISTING OR PROPOSED DUCT WITHOUT EXCEEDING MAXIMUM ALLOWABLE CABLE PULLING TENSION.

34. THE CONTRACTOR MUST SCHEDULE A FINAL ACCEPTANCE INSPECTION WITH THE COMMISSIONER AND THE CITY OF CHICAGO BUREAU OF ELECTRICITY UPON COMPLETION OF ALL PROPOSED STREET LIGHTING WORK. UPON FINAL ACCEPTANCE BY THE DEO AND THE COMMISSIONER, THE CONTRACTOR MUST TRANSFER ALL STREET LIGHTING AND UNDERPASS LIGHTING INSTALLATIONS TO THE CITY BOE FOR MAINTENANCE PURPOSES.

35. ALL EMPTY CONDUIT FOR FUTURE USE MUST HAVE A PULL STRING OR CABLE INSTALLED TO ASSIST IN FUTURE CABLING. THE COST OF THE CABLE OR STRING WILL BE CONSIDERED INCLUDED IN THE COST OF THE CONDUIT.

DESIGN BY:	YA		01/27/2020	ISSUE FOR BID	YA	YMD	EJL		
DRAWN BY:	ML		10/04/2019	ISSUE FOR OUC EFP	CJB	YMD	EJL		
CHECKED BY:	EJL		06/14/2019	ISSUE FOR 100% DESIGN	LAB	YMD	EJL		
APPROVED BY:	EJL		06/14/2019	ISSUE FOR PERMIT	LAB	YMD	EJL		
CDOT/APPROVED BY:		NO.	DATE	REVISIONS	DES.	DRW.	CHK.	DCCO	CDOT

MILHOUSE
333 South Wabash Avenue
Suite 2901
Chicago, IL 60604
t 312.994.8701
f 312.987.0071
www.milhouseinc.com

PERKINS+WILL
The Wrigley Building
410 North Michigan Ave.
Suite 1600
Chicago, IL 60611
t 312.755.0770
f 312.755.0775
www.perkinswill.com

CDOT
CHICAGO DEPARTMENT OF TRANSPORTATION
DIVISION OF ENGINEERING

154 N DAMEN AVE - DAMEN GREEN LINE STATION

ELECTRICAL GENERAL NOTES

CDOT PROJECT D-7-135

DATE: 01/27/2020

SPEC. NO.

DRAWING NO.
CE00-01

REVISION NO.

PROPOSED	PRESENT	
		SIGNAL, TRAFFIC 3 SECTION 1-WAY ADJUSTABLE, 12" OR AS NOTED
		SIGNAL, TRAFFIC 3 SECTION 2-WAY ADJUSTABLE, 12" OR AS NOTED
		SIGNAL OPTICALLY PROGRAMMED
		SIGNAL, PEDESTRIAN, COUNTDOWN
		SIGNAL, PEDESTRIAN, DON'T WALK/WALK
		SIGNAL FACE ARROW, 12" COLOR AS NOTED
		SIGNAL FACE, 1 SECTION YELLOW/GREEN ARROW DUAL INDICATION
		PUSH BUTTON, PEDESTRIAN
		SIGN,ILLUMINATED, WITH MESSAGE OR SYMBOL AS INDICATED
		MAST ARM, MONOTUBE, STEEL. SIZE AS INDICATED (SEE DWG. #870)
		MAST ARM, TRUSS, ALUMINUM. SIZE AS INDICATED
		CONTROLLER, TRAFFIC SIGNAL, PEDESTAL OR BASE MOUNTED AS INDICATED
		CONTROLLER, STREET LIGHTING, PEDESTAL OR BASE MOUNTED. (DWG. 876 or 880)
		CONTROLLER,STREET LIGHTING, POLE MOUNTED (DWG. #11940)
		POLE, WOOD, COMMONWEALTH EDISON COMPANY, SERVICE
		POLE, CITY STEEL, ANCHOR BASE, 34'6",7 GA. 10" DI A. AND 15"B.C. 24"X7' FND. W/1¼" ANCHOR RODS DRG. #818.
		POLE, CITY STEEL, ANCHOR BASE, 34'-6", 3 GA. 10" DIA. AND 15" B.C. 24"X9' FND. W/1¼" ANCHOR RODS DRG. #818 (16',20'or 26'M.A.)
		POLE, CITY STEEL, ANCHOR BASE, 34"-6", 3GA., 11" DIA. AND 17 ¼" B.C. 30"X9' FND. W/1¼" ANCHOR RODS DRG. #816. (30' M.A.)
		POLE, CITY STEEL, ANCHOR BASE 34'-6", 3 GA. 12 ¼" DIA. AND 16¼"B.C. 30"X11' FND. W/1¼" ANCHOR RODS DRG.#817. (35',40'or 44' M.A.)
		POLE, CITY STEEL, ANCHOR BASE, 32'-6", 3 GA. 10" DIA., WITH 3 GA. BAL. HSG. BASE AND 17¼" B. C. ON 30"X9' FND. W/ 11/4" ANCHOR RODS DRG. #816.
		POLE, CITY STEEL, ANCHOR BASE, 20',27'-6",29'-6", 7 GA. WITH STEEL BAL. HSG. BASE AND FND. W/10" D. B.C. AND 1" ANCHOR RODS DRG. #716.
		POLE,CITY STEEL, ANCHOR BASE, 20',27'-6",29'-6", 3 GA., WITH STEEL BAL. HSG. BASE AND FND. W/10" D. B.C. AND 1" ANCHOR RODS DWG.#719.
		POLE, CITY STEEL, ANCHOR BASE, 20',27'-6", 29'-6" 7 GA., AND ALUMINUM RESIDENTIAL DAVIT,AND FND. WITH 10" B.C. AND 1" ANCHOR RODSDWG#565 (CONCRETE) OR DWG.#936 (HELIX).
		POLE, CITY STEEL, ANCHOR BASE, 20',27'-6",29'-6" 3 GA.,AND FND. WITH 10" B.C. AND 1" ANCHOR RODS DWG. #565 (CONCRETE) OR DWG.#936 (HELIX).
		POLE , CITY STEEL, ANCHOR BASE, 32'-6", 7 GA., AND FND. WIBWC11 AND 1' ANCHOR RODS DWG. #753.
		POLE, CITY STEEL, ANCHR BASE, 32'-6", 3 GA., AND FND. WIBWC11 AND 1' ANCHOR RODS DWG. #753.
		POLE, CITY STEEL, ANCHOR BASE, 32'-6" 7 GA., ALUM. BHB AND FND. WITH 15" B.C.-24"X7' WITH 1" ANCHOR RODS DRG. #691.
		POLE, CITY STEEL, ANCHOR BASE, 32'-6", 3 GA., ALUM. BHB AND FND. WITH 15" B.C. 24"X 7' WITH 1" ANCHOR RODS DWG. #691.
		POLE, CITY ALUMINUM, WITH ROUND BAL. HSG. BASE. 25', 28', or 30' ON FND.WITH 14" B.C., ACQUIRED FROM CHICAGO PARK DISTRICT.
		POLE, CITY STEEL, EMBEDDED, 4"X 9"X 35' 7 GA., TAPERED TUBULAR. (DWG. #658)
		POLE, CITY STEEL, EMBEDDED, 4"X 9"X 35' 3 GA., TAPERED TUBULAR. (DWG. #658)
		POLE, CITY STEEL, EMBEDDED. (ACQUIRED FROM CTA)
		COLUMN,ELEVATED STRUCTURE
		POLE, WOOD. (SIZE AS NOTED)
		POLE, FOUNDATION WITH ELBOWS AS INDICATED.(SIZE AS NOTED)
		POLE, ORNAMENTAL OR OTHER, AS INDICATED ON THE PLANS
		RESIDENTIAL STREET LIGHTING CONTROLLER

PROPOSED	PRESENT	
		MANHOLE, 3'X4'X4' 24" F & C (DWG.#730) (A) 30" F & C (DWG#729) (B)
		MANHOLE, 4'X6'X6' 24" F & C (DWG.#732) (C) 30" F & C (DWG#733) (D)
		HANDHOLE, HEAVY DUTY, 36" I.D. (DWG.#866) 24" F & C (E). (DWG#871) 30" F & C (F)
		HANDHOLE, CIRCULAR WITH 24"FRAME & COVER,30"I.D. (#867) (G)
		FOUNDATION, CONTROLLER OR PEDESTAL, 13" B.C.,20"X5' (DWG. #709)
		FOUNDATION, TRAFFIC CONTROLLER DWG. #854. F.A. TERMINAL FND. DWG. #11972
		FOUNDATION, TRAFFIC TYPE "P", BASE MOUNT. (DWG. #888)
		FOUNDATION,CONTROLLER STREET LIGHT ,SPECIAL, 100A & 200A. (DWG.#876 & # 880)
		FOUNDATION, TRANSCLOSURE: TRANSCLOSURE HOUSING. (DWG.# 583 & #891)
		CONTROLLER,UNDERPASS LIGHTING 120V. & 240V. (DWG. #860 & #861)
		MANHOLE, UTILITY, E=COMMONWEALTH EDISON; T=ILL.BELL TEL.; G=PEOPLES GAS; W=CITY WATER; P=CHGO PARK DISTRICT; CTA=C.T.A; S= SEWER
		JUNCTION BOX, IN PAVEMENT (DWG. #815)
		DETECTOR LOOP IN PAVEMENT
20	20	CONDUIT or P.V.C., NUMBER,SIZE & TYPE. (AS NOTED)
20	20	CONDUIT or P.V.C. ENCASED IN CONCRETE. (SECTION or NUMBER OF CONDUIT INDICATED
		LUMINAIRE, H.P.S.V. 400W LAMP, 240V, SEMI-CUTOFF
		LUMINAIRE, H.P.S.V. 400W LAMP, 240V, CUTOFF
		LUMINAIRE, H.P.S.V. 310W LAMP, 240V
		LUMINAIRE, H.P.S.V. 310W LAMP 240V, CUTOFF
		LUMINAIRE, H.P.S.V. 150W LAMP, 240V
		LUMINAIRE, H.P.S.V. 150W LAMP, 120V
		LUMINAIRE, H.P.S.V. 250W LAMP, 120V, (ALLEY LIGHT)
		LUMINAIRE, H.P.S.V. 250W LAMP, 120V
		LUMINAIRE, H.P.S.V. 400W LAMP, 240V, (FLOOD LIGHT)
		TERMINAL, CABINET F.A. & P.C.
		FIRE ALARM BOX, MOUNTED
		FIRE ALARM BOX, POLE MOUNTED
PR	PR	CABLE, TRAFFIC SIGNAL, COMMUNICATION, 1-PAIR #14 SHIELDED, IN CONDUIT
2	2	CABLE, TRAFFIC SIGNAL POWER SUPPLY, 2/C- #4, 600 V. EPR, IN CONDUIT
		CABLE, TRAFFIC SIGNAL POWER SUPPLY, 2 1/C-#2 or #1/0 600V. EPR IN CONDUIT
		CABLE, TRAFFIC SIGNAL POWER SUPPLY, 2/C-#10 or #6, 600V NSRI, IN CONDUIT
		CABLE, TRAFFIC SIGNAL, 7/C-#12 or #14, 600V, EPR IN CONDUIT
		CABLE, TRAFFIC SIGNAL, 10/C-#12 600V. EPR IN CONDUIT
		CABLE, TRAFFIC SIGNAL, 14/C-#14, 600V, EPR IN CONDUIT
		CABLE, TRAFFIC SIGNAL, 19/C-#12 600V, EPR IN CONDUIT
2N	2N	CABLE, STREET LIGHT, 2 1/C-#6, 600V, RINS IN PARKWAY
2NG	2NG	CABLE, STREET LIGHT, 2 1/C-#6, 600V, RINS IN CONDUIT
3TG	3TG	CABLE, STREET LIGHT, 2 1/C-#6 EPRN 600V. & 1 1/C-#8 GREEN. TRIPLEXED.IN CONDUIT
3NG	3NG	CABLE, STREET LIGHT, 3 1/C-#1/0, or #2/0, or #4, 600V. EPR IN CONDUIT
2W	2W	WIRE, STREET LIGHT, 2 1/C-#6, HDNS. AERIAL
3W	3W	WIRE, STREET LIGHT, 2 1/C-#6 & 1 1/C #8, HDNS. AERIAL
3C	3C	CABLE, STREET LIGHT AERIAL, 3 1/C-#4 or #2 SELF SUPPORTING. 600V EPR
W FA	W FA	WIRE, F.A. & P.C. AERIAL, 1/C-#10, NUMERAL DENOTES QUANTITY
PR	PR	CABLE, F.A. & P.C. AERIAL, W/ MESSENGER #19-(NUMBER OF PAIRS AS INDICATED)
6 PR	6 PR	CABLE, F.A. & P.C. AERIAL, SELF SUPPORTING, #19-(NUMBER OF PAIRS AS INDICATED)
37 PR	37 PR	CABLE, F.A. & P.C., IN CONDUIT, #19-(NUMBER OF PAIRS AS INDICATED)
		DOWNLIGHT ASSEMBLY. (DWG. #850)
		LIGHT, TRAFFIC SAFETY ISLAND
		FLASHING BEACON & DOWNLIGHT

C.M.H. LUMINAIRES

PROPOSED	PRESENT	
		LUMINAIRE, C.M.H. 315W LAMP, 240V
		LUMINAIRE, C.M.H. 315W LAMP, 240V, (FLOOD)
		LUMINAIRE, C.M.H. 210W LAMP, 240V
		LUMINAIRE, C.M.H. 140W LAMP, 240V
		LUMINAIRE, C.M.H. 140W LAMP, 120V, (ALLEY)
		LUMINAIRE, C.M.H. 90W LAMP, 240V
		LUMINAIRE, C.M.H. 90W LAMP, 240V (ACORN)
		LUMINAIRE, C.M.H. 60W LAMP, 240V (ACORN)

H.P.S.V. ORNAMENTAL LUMINAIRES

PROPOSED	PRESENT			
		310W	PENDANT	(240V)
		400W	PENDANT	(240V)
		250W	PENDANT	(240V)
		150W	ACORN	(120V)
		150W	ACORN	(240V)
		50W	ACORN	(240V)
		100W	ACORN	(240V)
		150W	GLOBE	(240V)
		100W	GLOBE	(240V)
		50W	GLOBE	(240V)

L.E.D. LUMINAIRES

PROPOSED	PRESENT	
		(400W HPSV EQUIVALENT), 240V
		(100W HPSV EQUIVALENT), 240V, ACORN
		(310W HPSV EQUIVALENT), 240V
		(100/150W HPSV EQUIVALENT), 240V ACORN
		(250W HPSV EQUIVALENT), 240V
		(50W HPSV EQUIVALENT), 240V, ACORN

F	01-08-14	ADDED LED LUMINAIRES	A.VIEU
E	09-19-13	ADDED CMH LUMINAIRES	A.VIEU
D	02-06-04	REVISED/REDRAW	R.POOL/B.I.
C	04-01-02	REVISED/REDRAW	R.POOL/B.I.
B	12-4-01	ADDED ORNAMENTAL SYMBOLS	
A	8-6-96	REDRAWN	
	DATE	REVISION	

SUPERSEDES DWG. #

WORK ORDER NO. _____ DATE _____

COST ALLOCATION ACCOUNT _____

APPROPRIATION ACCOUNT [MATERIAL / LABOR] _____

STANDARD CODE FOR TRAFFIC SIGNALS/ STREET LIGHTING

CITY OF CHICAGO
DEPT. OF TRANSPORTATION
DIVISION OF ENGINEERING
ELECTRICAL SECTION

DRAFTSMAN:	CHIEF DRAFTSMAN:	ENGINEER:
R. IVY	R. CARTER	R. POOL/R.C/W.T.

SUPERVISING ENGINEER, ELEC. DESIGN ENGR.

ENGINEER OF ELECTRICITY

CHIEF SUPT. OF CONSTRUCTION

DEPUTY COMMISSIONER

DWG. NO. 826

SIZE: 22"| 36" SCALE: NONE DATE: 09-19-13

...\826-Latest.dgn 5/9/2014 3:14:19 PM

DESIGN BY:	YA		01/27/2020	ISSUE FOR BID	YA	YMD	EJL		
DRAWN BY:	ML		10/04/2019	ISSUE FOR OUC EFP	CJB	YMD	EJL		
CHECKED BY:	EJL		06/14/2019	ISSUE FOR 100% DESIGN	LAB	YMD	EJL		
APPROVED BY:	EJL		06/14/2019	ISSUE FOR PERMIT	LAB	YMD	EJL		
CDOT/APPROVED BY:		NO.	DATE	REVISIONS	DES.	DRW.	CHK.	DCCO	CDOT

MILHOUSE
333 South Wabash Avenue
Suite 2901
Chicago, IL 60604
t 312.994.8701
f 312.987.0071
www.milhouseinc.com

PERKINS+WILL
The Wrigley Building
410 North Michigan Ave.
Suite 1600
Chicago, IL 60611
t 312.755.0770
f 312.755.0775
www.perkinswill.com

CDOT
CHICAGO DEPARTMENT OF TRANSPORTATION
DIVISION OF ENGINEERING

154 N DAMEN AVE - DAMEN GREEN LINE STATION

ELECTRICAL SYMBOLS

CDOT PROJECT D-7-135 | DATE: 01/27/2020

SPEC. NO.

DRAWING NO. CE00-02

REVISION NO.

NOTES

1. FOR ELECTRICAL GENERAL NOTES, LEGENDS AND SYMBOLS, SEE SHEETS E00-01, E00-02.
2. SEE TRAFFIC SIGNAL DRAWINGS FOR LOCATIONS OF EQUIPMENT, CONDUITS AND CABLES.
3. IF VAULTED SIDEWALK IS ENCOUNTERED BUT NOT NOTED IN THE PLANS, CONTRACTOR MUST EXCAVATE TO ACCOMMODATE TYPE OF FOUNDATION TO BE INSTALLED AS DETERMINED BY THE COMMISSIONER. THIS WORK WILL BE PAID FOR UNDER THE ITEM EARTH EXCAVATION, IF APPLICABLE. THE BACKFILL WILL BE PAID FOR UNDER THE ITEM POROUS GRANULAR EMBANKMENT.
4. LOCATIONS SHOWN FOR PROPOSED HANDHOLES AND MANHOLES ARE APPROXIMATE. THE CONTRACTOR SHALL INVESTIGATE EXISTING UNDERGROUND FACILITIES IN THE AREA AND DETERMINE SUITABLE LOCATION AS APPROVED BY THE COMMISSIONER.
5. CONDUIT LOCATIONS ARE APPROXIMATE. THE CONTRACTOR SHALL INVESTIGATE EXISTING UNDERGROUND FACILITIES IN THE AREA AND DETERMINE SUITABLE LOCATION AS APPROVED BY THE COMMISSIONER.
6. LIGHTING CONTRACTOR MUST COORDINATE CONDUITS ENTERING HANDHOLES OR MANHOLES WITH TRAFFIC SIGNAL CONTRACTOR. NO ADDITIONAL PAYMENT WILL BE MADE IF CONTRACTOR FAILS TO INSTALL LIGHTING CONDUITS TOGETHER WITH TRAFFIC SIGNAL CONDUITS.

INSTALLATION OF UNDERGROUND FACILITIES

A- CONSTRUCT FOUNDATION 30" DIA. WITH 15" ANCHOR BOLT CIRCLE, 1" DIA. ANCHOR RODS PER DEO STANDARD DRAWING NO. 956, 3' FROM FACE OF CURB UNLESS NOTED OTHERWISE.

B- INSTALL 1" DIA. SCH. 40 PVC CONDUIT IN TRENCH.

C- INSTALL 2" DIA. SCH. 40 PVC CONDUIT IN TRENCH. UNDER ROADWAYS OR DRIVEWAYS CONDUIT MUST BE SCH. 80, AS NOTED. INSTALL APPROPRIATE CONDUIT REDUCERS BETWEEN CHANGES FROM SCH. 80 TO SCH. 40.

D- CONSTRUCT HANDHOLE, 30" DIA. WITH 24" DIA. FRAME AND COVER PER DEO STANDARD DRAWING NO. 867.

F- DRILL EXISTING MANHOLE/HANDHOLE.

H- INSTALL 4" DIA. SCH. 40 PVC CONDUIT IN TRENCH. UNDER ROADWAYS OR DRIVEWAYS CONDUIT MUST BE SCH. 80, AS NOTED. INSTALL APPROPRIATE CONDUIT REDUCERS BETWEEN CHANGES FROM SCH. 80 TO SCH. 40. CONDUIT FOR FUTURE OEMC AND DEO USE.

L- INSTALL 4" DIA. SCH. 80 PVC CONDUIT IN TRENCH. CONDUIT FOR FUTURE DEO USE.

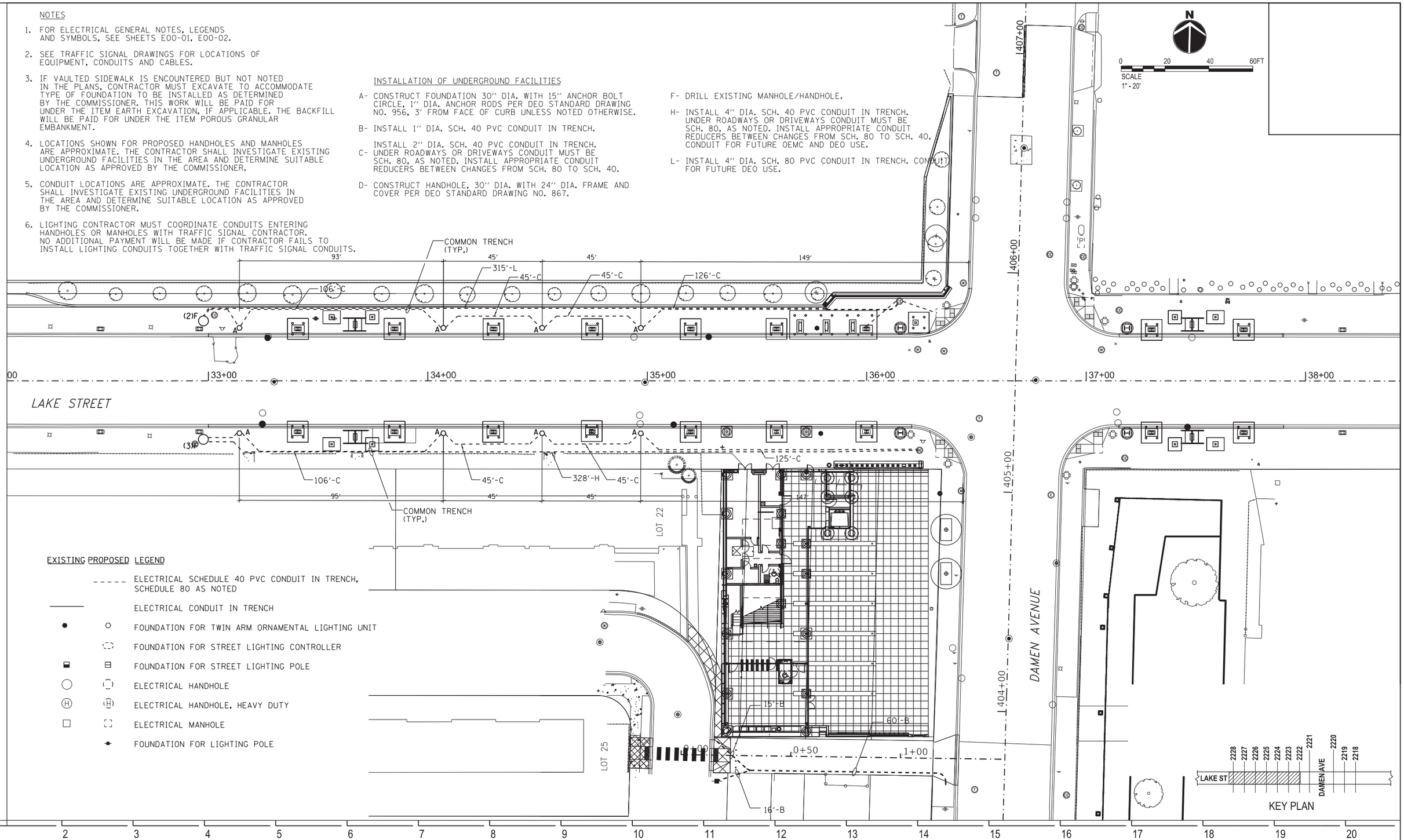

EXISTING PROPOSED LEGEND

- ELECTRICAL SCHEDULE 40 PVC CONDUIT IN TRENCH, SCHEDULE 80 AS NOTED
- ELECTRICAL CONDUIT IN TRENCH
- FOUNDATION FOR TWIN ARM ORNAMENTAL LIGHTING UNIT
- FOUNDATION FOR STREET LIGHTING CONTROLLER
- FOUNDATION FOR STREET LIGHTING POLE
- ELECTRICAL HANDHOLE
- ELECTRICAL HANDHOLE, HEAVY DUTY
- ELECTRICAL MANHOLE
- FOUNDATION FOR LIGHTING POLE

DESIGN BY:	YA		01/27/2020	ISSUE FOR BID	YA	YMD	EJL		
DRAWN BY:	ML		10/04/2019	ISSUE FOR OUC EFP	CJB	YMD	EJL		
CHECKED BY:	EJL		06/14/2019	ISSUE FOR 100% DESIGN	LAB	YMD	EJL		
APPROVED BY:	EJL		06/14/2019	ISSUE FOR PERMIT	LAB	YMD	EJL		
CDOT/APPROVED BY:		NO.	DATE	REVISIONS	DES.	DRW.	CHK.	DCCO	CDOT

MILHOUSE
333 South Wabash Avenue
Suite 2901
Chicago, IL 60604
t 312.994.8701
f 312.987.0071
www.milhouseinc.com

PERKINS+WILL
The Wrigley Building
410 North Michigan Ave.
Suite 1600
Chicago, IL 60611
t 312.755.0770
f 312.755.0775
www.perkinswill.com

CDOT
CHICAGO DEPARTMENT OF TRANSPORTATION
DIVISION OF ENGINEERING

154 N DAMEN AVE - DAMEN GREEN LINE STATION

UNDERGROUND CONDUIT FACILITIES

CDOT PROJECT D-7-135

DATE: 01/27/2020

SPEC. NO.

DRAWING NO. CE10-01

REVISION NO.

STEEL BRACKET DETAIL

NOT TO SCALE

SECTION A-A

NOT TO SCALE

LEGEND/SYMBOL LIST

TWIN ARM ORNAMENTAL LIGHTING UNIT: 2-LED ACORN LUMINAIRES, 16' M. H. PER DEO STANDARD DRAWINGS. NO. 911, AND NO. 912, INCLUDING 2 FESTOON OUTLETS.

[ ] VIADUCT LUMINAIRE, LED, 120V ATTACHED TO UNDERSIDE OF THE ELEVATED CTA STRUCTURE.

CONTROLLER
CIRCUIT
POLE NO.
(Y 1-1)

NOTE:

STEEL BRACKETS TO CONFORM TO ASTM A-36 HIGH STRENGTH STEEL. ALL BOLTS NUTS AND WASHERS TO CONFORM TO ASTM A-325. ABOVE BRACKETS AND APPURTENANCES TO BE GALVANIZED AND PAINTED TO MATCH STRUCTURE. THIS WORK WILL BE INCLUDED IN THE COST OF VIADUCT LUMINAIRE INSTALLATION.

CONTROLLER X	ATLAS NO. K-22, GRP. NO. 16							
CIRCUIT	BREAKER TYPE	VOLTAGE	ACORN	VIADUCT	ARTERIAL	FESTOONS	TRAFFIC CTL	ALLEY
1	50A, 2P	240	14	3	2	-	-	-
2	50A, 2P	240	14	3	2	-	-	-
3	50A, 2P	240	26	-	-	-	-	-
4	50A, 2P	240	24	-	-	-	-	1

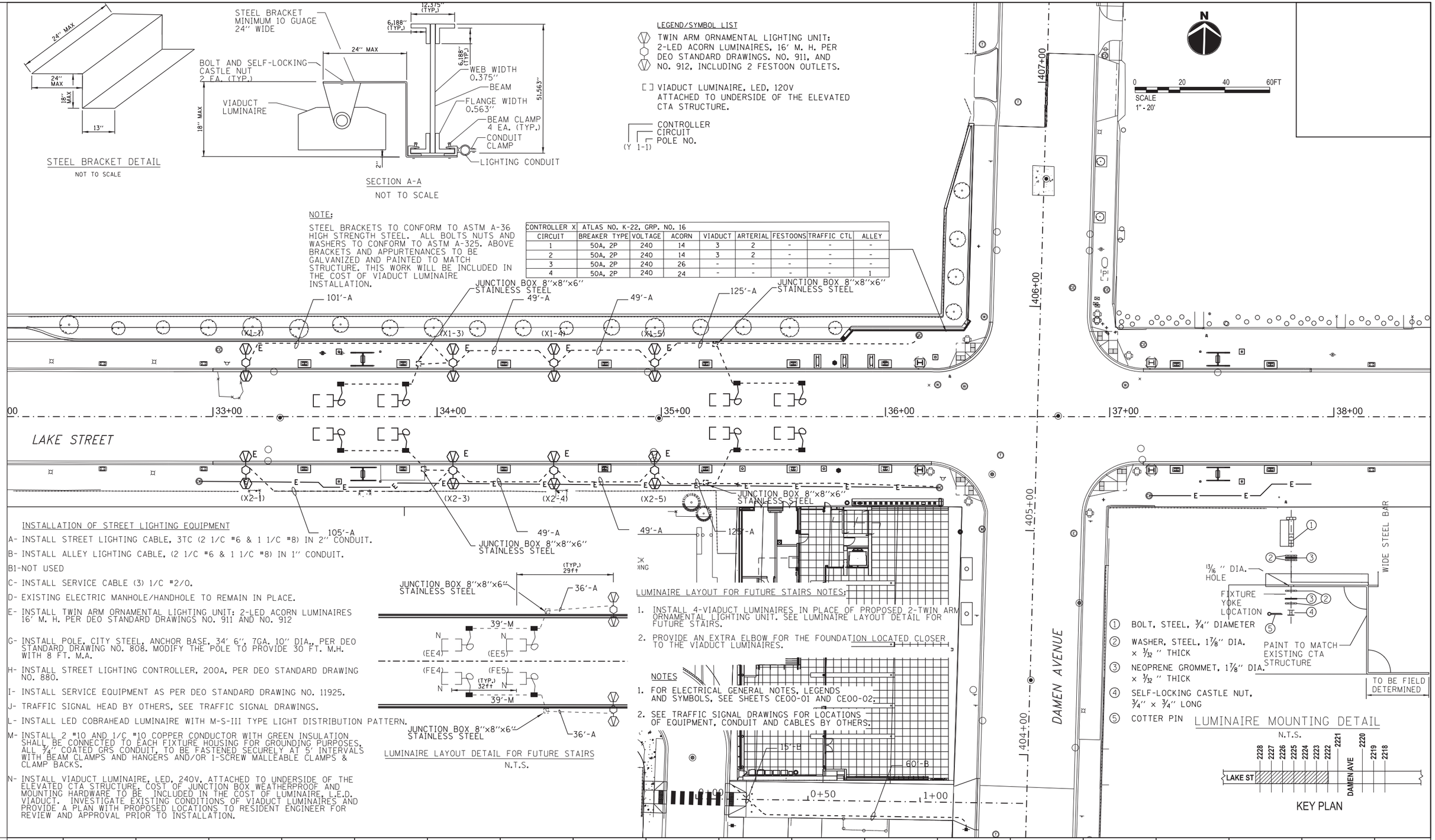

INSTALLATION OF STREET LIGHTING EQUIPMENT

A- INSTALL STREET LIGHTING CABLE, 3TC (2 1/C #6 & 1 1/C #8) IN 2" CONDUIT.

B- INSTALL ALLEY LIGHTING CABLE, (2 1/C #6 & 1 1/C #8) IN 1" CONDUIT.

B1-NOT USED

C- INSTALL SERVICE CABLE (3) 1/C #2/0.

D- EXISTING ELECTRIC MANHOLE/HANDHOLE TO REMAIN IN PLACE.

E- INSTALL TWIN ARM ORNAMENTAL LIGHTING UNIT: 2-LED ACORN LUMINAIRES 16' M. H. PER DEO STANDARD DRAWINGS NO. 911 AND NO. 912

G- INSTALL POLE, CITY STEEL, ANCHOR BASE, 34' 6", 7GA. 10" DIA., PER DEO STANDARD DRAWING NO. 808. MODIFY THE POLE TO PROVIDE 30 FT. M.H. WITH 8 FT. M.A.

H- INSTALL STREET LIGHTING CONTROLLER, 200A, PER DEO STANDARD DRAWING NO. 880.

I- INSTALL SERVICE EQUIPMENT AS PER DEO STANDARD DRAWING NO. 11925.

J- TRAFFIC SIGNAL HEAD BY OTHERS, SEE TRAFFIC SIGNAL DRAWINGS.

L- INSTALL LED COBRAHEAD LUMINAIRE WITH M-S-III TYPE LIGHT DISTRIBUTION PATTERN.

M- INSTALL 2 #10 AND 1/C #10 COPPER CONDUCTOR WITH GREEN INSULATION SHALL BE CONNECTED TO EACH FIXTURE HOUSING FOR GROUNDING PURPOSES. ALL 3/4" COATED GRS CONDUIT, TO BE FASTENED SECURELY AT 5' INTERVALS WITH BEAM CLAMPS AND HANGERS AND/OR 1-SCREW MALLEABLE CLAMPS & CLAMP BACKS.

N- INSTALL VIADUCT LUMINAIRE, LED, 240V, ATTACHED TO UNDERSIDE OF THE ELEVATED CTA STRUCTURE. COST OF JUNCTION BOX WEATHERPROOF AND MOUNTING HARDWARE TO BE INCLUDED IN THE COST OF LUMINAIRE, L.E.D. VIADUCT. INVESTIGATE EXISTING CONDITIONS OF VIADUCT LUMINAIRES AND PROVIDE A PLAN WITH PROPOSED LOCATIONS TO RESIDENT ENGINEER FOR REVIEW AND APPROVAL PRIOR TO INSTALLATION.

LUMINAIRE LAYOUT DETAIL FOR FUTURE STAIRS

N.T.S.

LUMINAIRE LAYOUT FOR FUTURE STAIRS NOTES:

1. INSTALL 4-VIADUCT LUMINAIRES IN PLACE OF PROPOSED 2-TWIN ARM ORNAMENTAL LIGHTING UNIT. SEE LUMINAIRE LAYOUT DETAIL FOR FUTURE STAIRS.
2. PROVIDE AN EXTRA ELBOW FOR THE FOUNDATION LOCATED CLOSER TO THE VIADUCT LUMINAIRES.

NOTES

1. FOR ELECTRICAL GENERAL NOTES, LEGENDS AND SYMBOLS, SEE SHEETS CE00-01 AND CE00-02.
2. SEE TRAFFIC SIGNAL DRAWINGS FOR LOCATIONS OF EQUIPMENT, CONDUIT AND CABLES BY OTHERS.

DESIGN BY:	YA		01/27/2020	ISSUE FOR BID	YA	YMD	EJL		
DRAWN BY:	ML		10/04/2019	ISSUE FOR OUC EFP	CJB	YMD	EJL		
CHECKED BY:	EJL		06/14/2019	ISSUE FOR 100% DESIGN	LAB	YMD	EJL		
APPROVED BY:	EJL		06/14/2019	ISSUE FOR PERMIT	LAB	YMD	EJL		
CDOT/APPROVED BY:		NO.	DATE	REVISIONS	DES.	DRW.	CHK.	DCCO	CDOT

MILHOUSE
333 South Wabash Avenue
Suite 2901
Chicago, IL 60604
t 312.994.8701
f 312.987.0071
www.milhouseinc.com

PERKINS+WILL
The Wrigley Building
410 North Michigan Ave.
Suite 1600
Chicago, IL 60611
t 312.755.0770
f 312.755.0775
www.perkinswill.com

CDOT
CHICAGO DEPARTMENT OF TRANSPORTATION
DIVISION OF ENGINEERING

154 N DAMEN AVE - DAMEN GREEN LINE STATION

STREET LIGHTING INSTALLATION

CDOT PROJECT D-7-135

DATE: 01/27/2020

SPEC. NO.

DRAWING NO. CE10-02

REVISION NO.

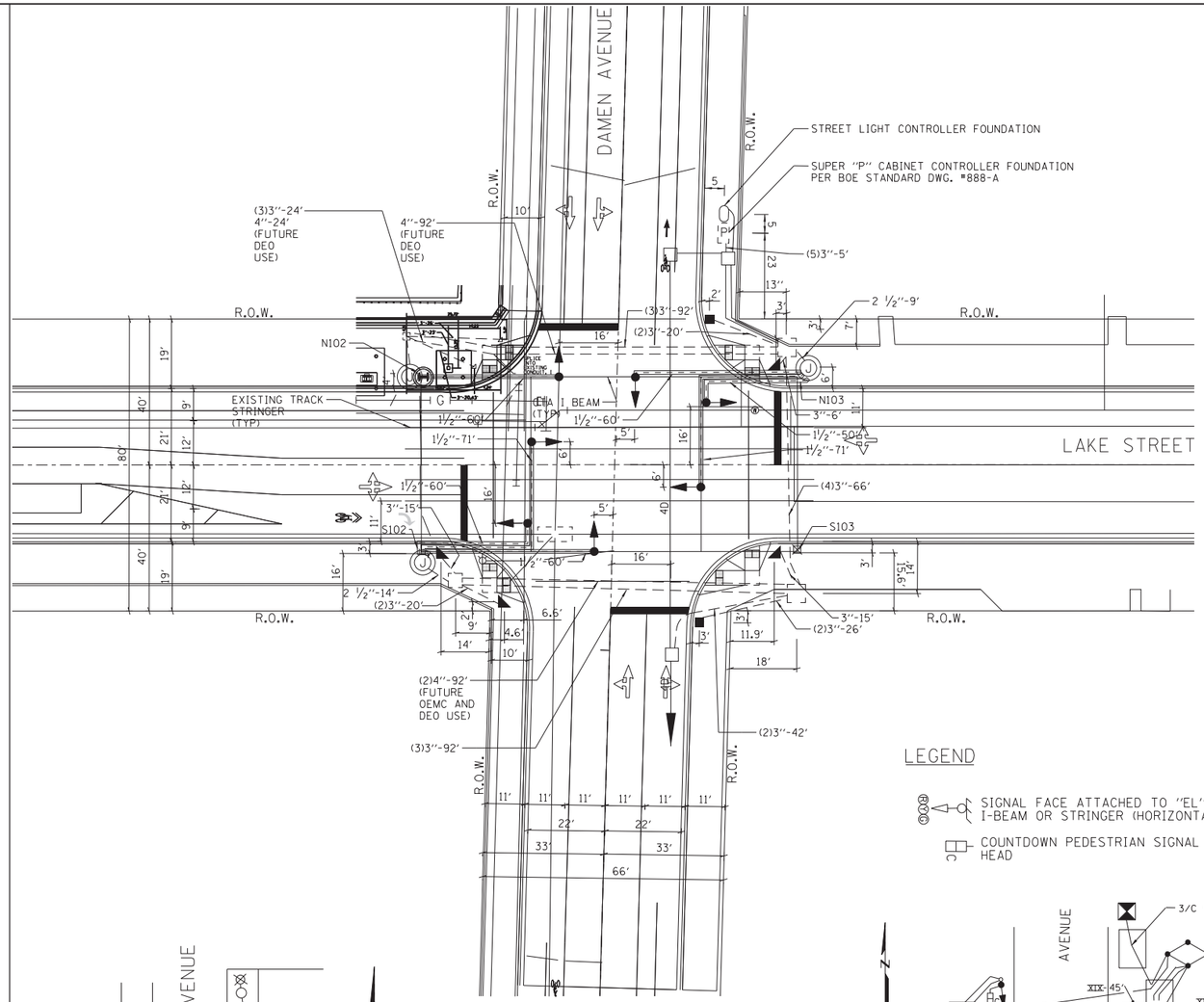

FOUNDATION AND CONDUIT PLAN

SCALE: 1" = 20'

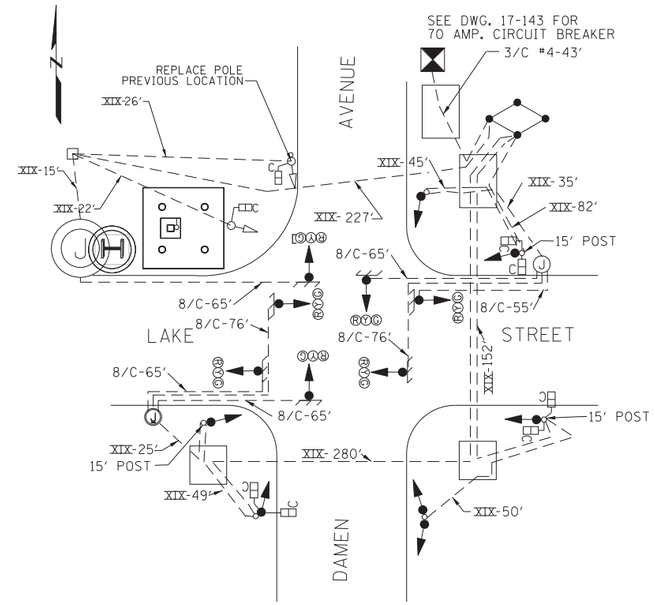

SIGNAL AND CABLE PLAN

NOT TO SCALE

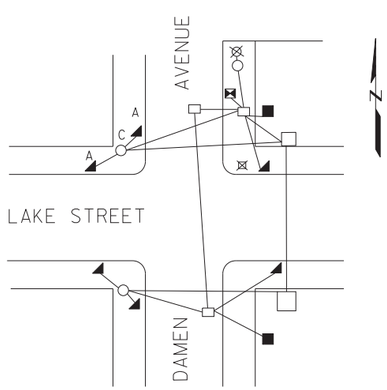

FOUNDATION REMOVAL PLAN

NOT TO SCALE

LEGEND

SIGNAL FACE ATTACHED TO "EL" STRUCTURE I-BEAM OR STRINGER (HORIZONTAL MOUNT)

COUNTDOWN PEDESTRIAN SIGNAL HEAD

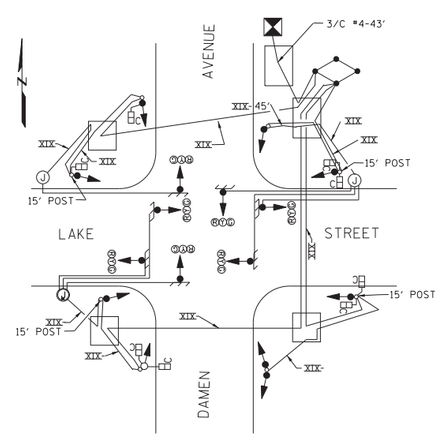

SIGNAL & CABLE REMOVAL PLAN

NOT TO SCALE

NOTES:

1. FOR ELECTRICAL GENERAL NOTES, LEGENDS AND SYMBOLS, SEE SHEETS CE00-01 AND CE00-02
2. OFFSETS FROM CURB TO SIGNAL LOCATIONS MAY VARY TO PROVIDE VISIBILITY AROUND "EL" SUPPORT COLUMNS.
3. EXACT LOCATION OF HORIZONTAL MOUNTED SIGNALS TO BE DETERMINED BY THE FIELD ENGINEER. MOUNTING METHOD TO BE APPROVED BY CDOT.
4. THE THIRD 3" CONDUIT AT STREET CROSSINGS IS TO ACCOMMODATE STREET LIGHT CIRCUITS.
5. ALL PEDESTRIAN SIGNAL HEADS TO BE 16" ADJUSTABLE 1 SECTION UNIT WITH ITE SYMBOLIC LENSES AND COUNTDOWN TIMERS.
6. THE LOCATION AND DEPTH OF UTILITIES SHOWN ON THE PLAN AND THE PROFILE ARE APPROXIMATE & TO BE USED FOR INFORMATIONAL PURPOSES ONLY. THE CONTRACTOR SHALL DETERMINE THE EXISTENCE, NATURE AND EXACT LOCATION, BOTH VERTICAL AND HORIZONTAL OF ALL UTILITIES LINES AND APPURTENANCES WITHIN THIS IMPROVEMENT. ANY UTILITY THAT HAS BEEN DAMAGED DURING CONSTRUCTION SHALL BE REPAIRED OR REPLACED BY CONTRACTOR AT NO COST TO THE CITY OR ENGINEER.
7. EXISTING CONTROLLER IN NORTHEAST CORNER

REMOVAL LEGEND

A - REMOVE EXISTING CONCRETE FOUNDATION.
C - REMOVE EXISTING HANDHOLE.

E - NOT USED
F - REMOVE EXISTING TRAFFIC SIGNALS.
G - REMOVE EXISTING PEDESTRIAN SIGNALS.
H - REMOVE EXISTING TRAFFIC SIGNALS POST.
I - EXTEND EXISTING 4" & 3-3" CONDUIT TO NEW HANDHOLE. PROVIDE FITTINGS AS REQUIRED.

A	10/16/18	LAKE AND DAMEN STA IMPROVEMENT
DATE		REVISION

SUPERSEDES DWG. # 14578 DATED 06/23/2017

TRAFFIC CONTROL SIGNALS LAKE ST AND DAMEN AVE

CITY OF CHICAGO
DEPT. OF STREETS AND SANITATION
BUREAU OF ELECTRICITY
DIVISION OF ELECTRICAL ENGINEERING

DRAFTSMAN: | CHIEF DRAFTSMAN: | ENGINEER:
SUPERVISING ENGINEER: | ELEC. DESIGN ENGR.
ENGINEER OF ELECTRICITY:
GEN'L SUPT. OF CONSTRUCTION:
DEPUTY COMMISSIONER:
SIZE: | SCALE: 1"=20' | DATE: 06/23/2017

DWG. NO. 14578 TS-3

DESIGN BY:	YA		01/27/2020	ISSUE FOR BID	YA	YMD	EJL		
DRAWN BY:	ML		10/04/2019	ISSUE FOR OUC EFP	CJB	YMD	EJL		
CHECKED BY:	EJL		06/14/2019	ISSUE FOR 100% DESIGN	LAB	YMD	EJL		
APPROVED BY:	EJL		06/14/2019	ISSUE FOR PERMIT	LAB	YMD	EJL		
CDOT/APPROVED BY:		NO.	DATE	REVISIONS	DES.	DRW.	CHK.	DCCO	CDOT

MILHOUSE
333 South Wabash Avenue
Suite 2901
Chicago, IL 60604
t 312.994.8701
f 312.987.0071
www.milhouseinc.com

PERKINS+WILL
The Wrigley Building
410 North Michigan Ave.
Suite 1600
Chicago, IL 60611
t 312.755.0770
f 312.755.0775
www.perkinswill.com

CDOT
CHICAGO DEPARTMENT OF TRANSPORTATION
DIVISION OF ENGINEERING

154 N DAMEN AVE - DAMEN GREEN LINE STATION

TRAFFIC CONTROL SIGNALS

CDOT PROJECT D-7-135 | DATE: 01/27/2020

SPEC. NO.
DRAWING NO. CE10-03
REVISION NO.

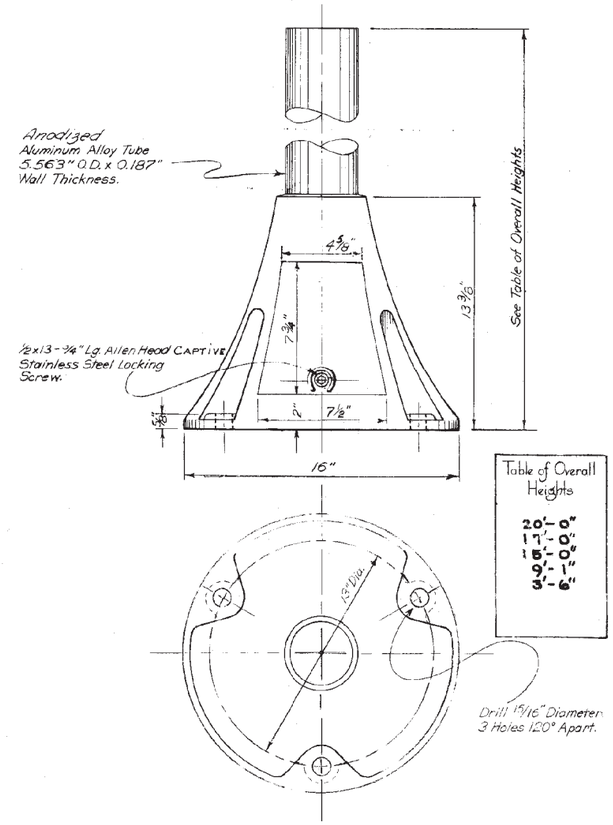

Table of Overall Heights
20'-0"
17'-0"
15'-0"
9'-1"
3'-6"

ALUMINUM PEDESTAL BASE WITH HANDHOLE
for
Street Lighting Controller, Traffic Signal Controller and Traffic Signal Heads.

		REVISED	
J	CHANGED OVERALL HEIGHTS 3-22-82		
	Revised Table of Overall Heights	A	5-5-60
	Revised O.D. of Pedestal	B	6-30-60
	Revised Specification Number	C	12-21-60
	REVISED TABLE OF OVERALL HEIGHTS	D	3-23-62
	REVISED DOOR DIMENSIONS	E	6-4-64
	Revised Overall Heights.	F	7-14-71
	REVISED OVERALL HEIGHTS	G	OCT. 26, 73
	REVISED OVERALL HEIGHTS	H	5-4-73

CITY OF CHICAGO
DEPT. OF STREETS AND SANITATION
DIVISION OF ELECTRICAL ENGINEERING

DRAWN R. COLLEY | CHECKED J. BORE | ENGINEER Ruzicka
ENG. IN CHARGE
SUPT. OF CONSTRUCTION
DEPUTY COMMISSIONER
SIZE 8½" x 14" | SCALE | DATE 4-13-60
DRG. NO. 526

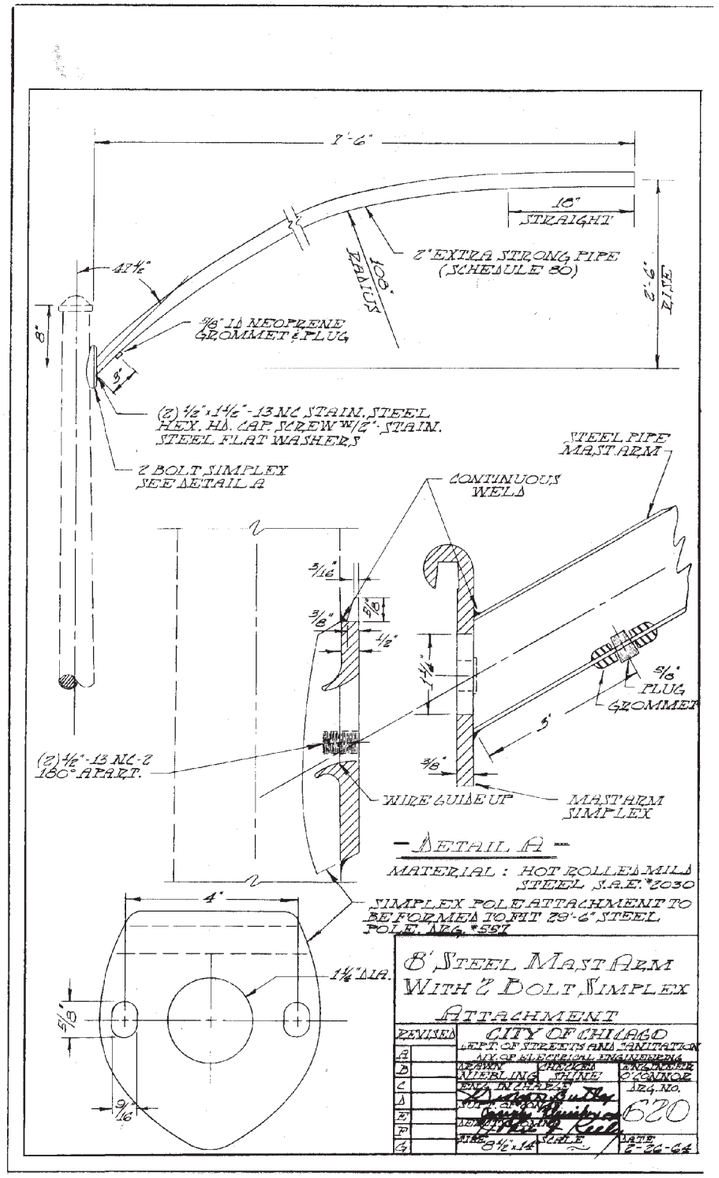

— DETAIL A —
MATERIAL: HOT ROLLED MILD STEEL S.A.E. #1020
SIMPLEX POLE ATTACHMENT TO BE FORMED TO FIT 29'-6" STEEL POLE, NEG. #597

8' STEEL MAST ARM WITH 2 BOLT SIMPLEX ATTACHMENT

REVISED	
A	
B	
C	
D	
E	
F	
G	

CITY OF CHICAGO
DEPT. OF STREETS AND SANITATION
DIV. OF ELECTRICAL ENGINEERING
DRAWN WIERLING | CHECKED CHANG | ENGINEER O'CONNOR
ENG. IN CHARGE
SUPT. OF CONST.
DEPUTY COMM.
SIZE 8½" x 14" | SCALE | DATE 2-26-64
DRG. NO. 620

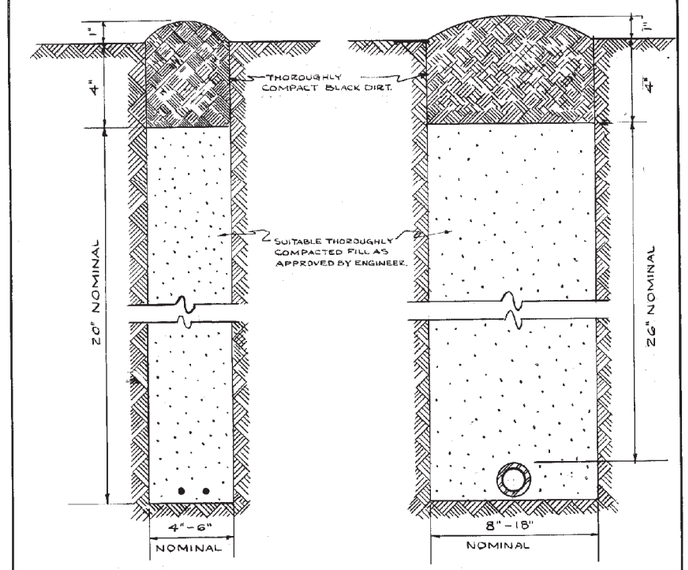

CABLE TRENCH
CONDUIT TRENCH

NOTE
EXCESS SOIL FROM TRENCH TO BE COMPLETELY REMOVED FROM SITE AS SOON AS PRACTICABLE.
BLACK DIRT TO BE TAMPED & THOROUGHLY COMPACTED AS SHOWN.

STANDARD METHOD FOR BACKFILLING CABLE & CONDUIT TRENCHES IN SODDED PARKWAY & LAWNS

REVISION	
A	
B	
C	
D	
E	
F	
G	
H	

CITY OF CHICAGO
DEPT. OF STREETS & SANITATION
DIVISION OF ELECTRICAL ENGINEERING
DRAWN W.E. HARP | CHECKED W. Kline | ENGINEER J.O'CONNOR
ENGIN. CHARGE
SUPT. OF CONST.
DEPUTY COMM.
SIZE 8½" x 14" | SCALE | DATE 7-14-61
DRG. NO. 579

DESIGN BY:	YA		01/27/2020	ISSUE FOR BID	YA	YMD	EJL		
DRAWN BY:	ML		10/04/2019	ISSUE FOR OUC EFP	CJB	YMD	EJL		
CHECKED BY:	EJL		06/14/2019	ISSUE FOR 100% DESIGN	LAB	YMD	EJL		
APPROVED BY:	EJL		06/14/2019	ISSUE FOR PERMIT	LAB	YMD	EJL		
CDOT/APPROVED BY:		NO.	DATE	REVISIONS	DES.	DRW.	CHK.	DCCO	CDOT

MILHOUSE
333 South Wabash Avenue
Suite 2901
Chicago, IL 60604
t 312.994.8701
f 312.987.0071
www.milhouseinc.com

PERKINS+WILL
The Wrigley Building
410 North Michigan Ave.
Suite 1600
Chicago, IL 60611
t 312.755.0770
f 312.755.0775
www.perkinswill.com

CDOT
CHICAGO DEPARTMENT OF TRANSPORTATION
DIVISION OF ENGINEERING

154 N DAMEN AVE - DAMEN GREEN LINE STATION

ELECTRICAL DETAILS

CDOT PROJECT D-7-135 | DATE: 01/27/2020

SPEC. NO.
DRAWING NO. CE11-01
REVISION NO.

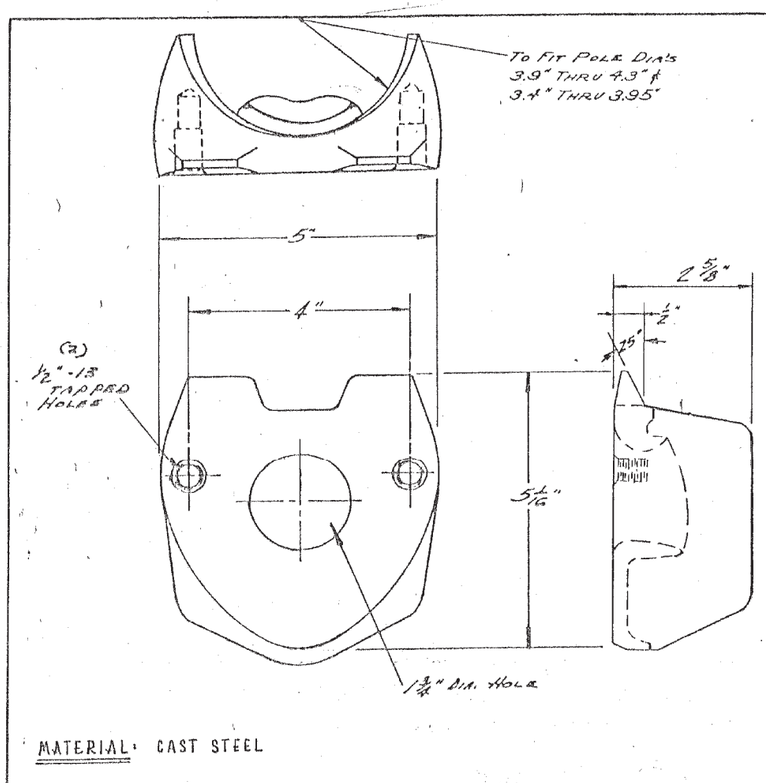

MATERIAL: CAST STEEL

A	J.O'C.	MATERIAL NOTE ADDED.

2 BOLT MAST ARM ATTACHMENT
POLE PLATE DETAILS

REVISED: A 5-27-76 B C D E F G

CITY OF CHICAGO
DEPT. OF STREETS AND SANITATION
DIVISION OF ELECTRICAL ENGINEERING

DRAWN J. WAHLFELDT | CHECKED J. BORE | ENGINEER J. BORE

ENG. IN CHARGE
SUPT. OF CONST.
DEPUTY COMM.

DWG. NO. 659

SIZE 8½"x14" | SCALE ~ | DATE 10-25-66

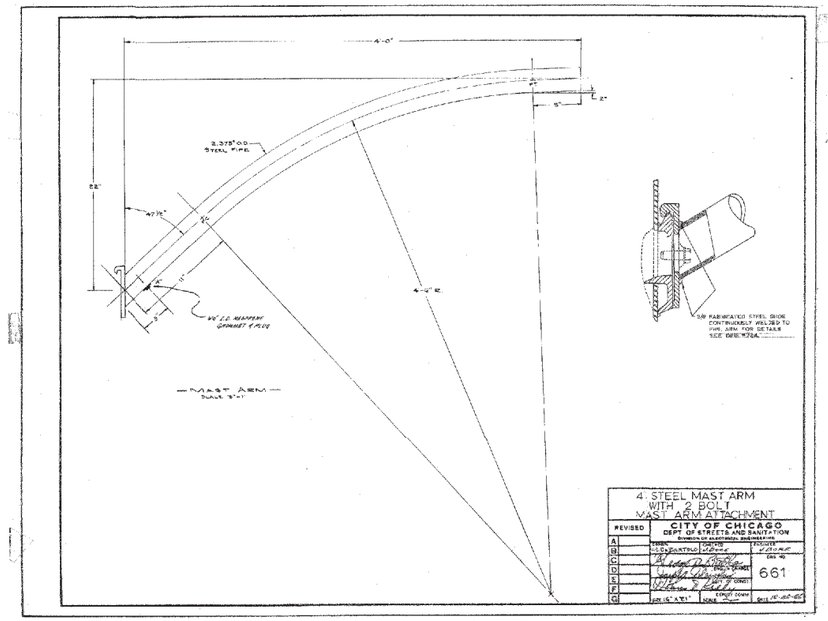

4-STEEL MAST ARM
WITH 2 BOLT
MAST ARM ATTACHMENT

REVISED: A B C D E F G

CITY OF CHICAGO
DEPT. OF STREETS AND SANITATION
DIVISION OF ELECTRICAL ENGINEERING

DRAWN J.D.DOATING | CHECKED | ENGINEER

ENG. IN CHARGE
SUPT. OF CONST.
DEPUTY COMM.

DWG. NO. 661

SIZE 16"x21" | SCALE | DATE 10-20-66

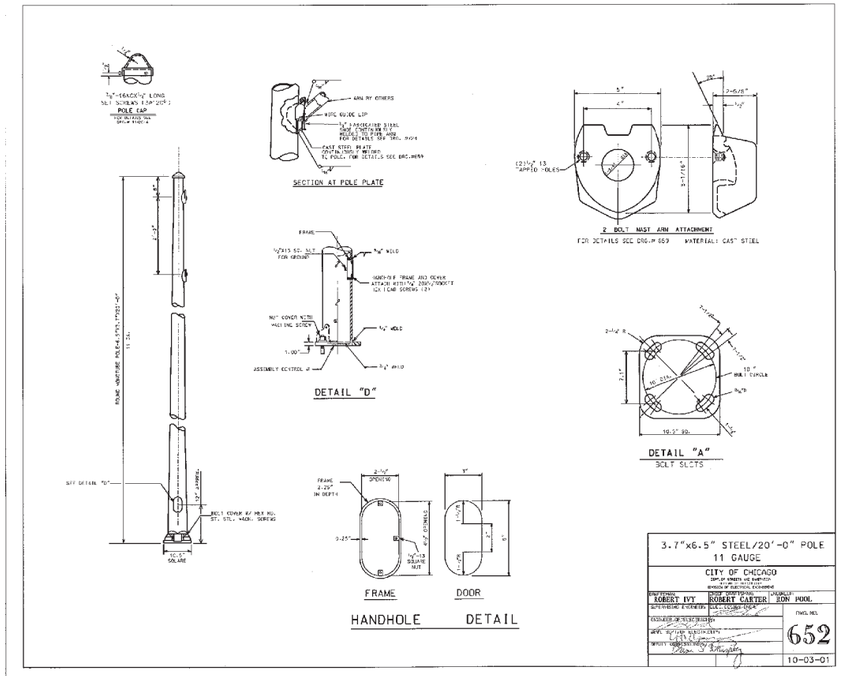

3.7"x6.5" STEEL/20'-0" POLE
11 GAUGE

CITY OF CHICAGO
DEPT. OF STREETS AND SANITATION
DIVISION OF ELECTRICAL ENGINEERING

DRAWN ROBERT IVY | CHECKED ROBERT CARTER | ENGINEER JON HOOK

ENG. IN CHARGE
SUPT. OF CONST.
DEPUTY COMM.

DWG. NO. 652

10-03-01

DESIGN BY:	YA		01/27/2020	ISSUE FOR BID	YA	YMD	EJL		
DRAWN BY:	ML		10/04/2019	ISSUE FOR OUC EFP	CJB	YMD	EJL		
CHECKED BY:	EJL		06/14/2019	ISSUE FOR 100% DESIGN	LAB	YMD	EJL		
APPROVED BY:	EJL		06/14/2019	ISSUE FOR PERMIT	LAB	YMD	EJL		
CDOT/APPROVED BY:		NO.	DATE	REVISIONS	DES.	DRW.	CHK.	DCCO	CDOT

MILHOUSE
333 South Wabash Avenue
Suite 2901
Chicago, IL 60604
t 312.994.8701
f 312.987.0071
www.milhouseinc.com

PERKINS+WILL
The Wrigley Building
410 North Michigan Ave.
Suite 1600
Chicago, IL 60611
t 312.755.0770
f 312.755.0775
www.perkinswill.com

CDOT
CHICAGO DEPARTMENT OF TRANSPORTATION
DIVISION OF ENGINEERING

154 N DAMEN AVE - DAMEN GREEN LINE STATION

ELECTRICAL DETAILS

CDOT PROJECT D-7-135 | DATE: 01/27/2020

SPEC. NO.

DRAWING NO. CE11-02

REVISION NO.

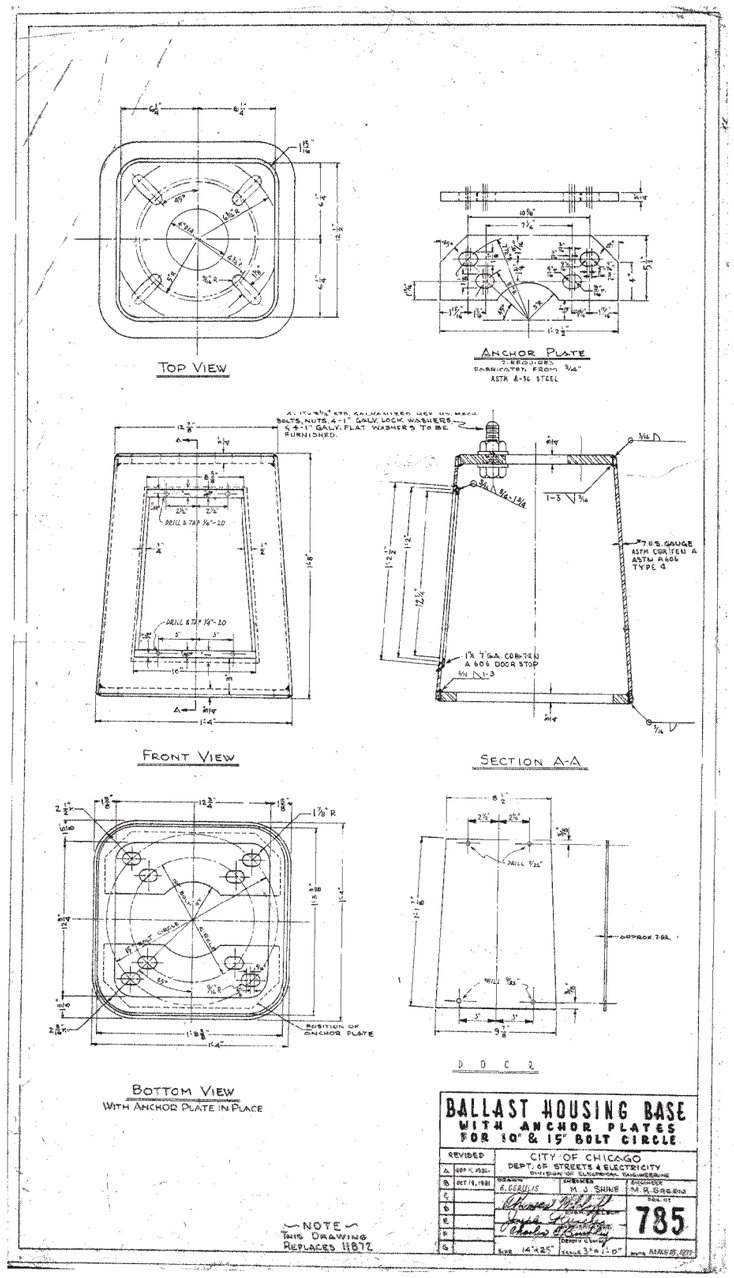

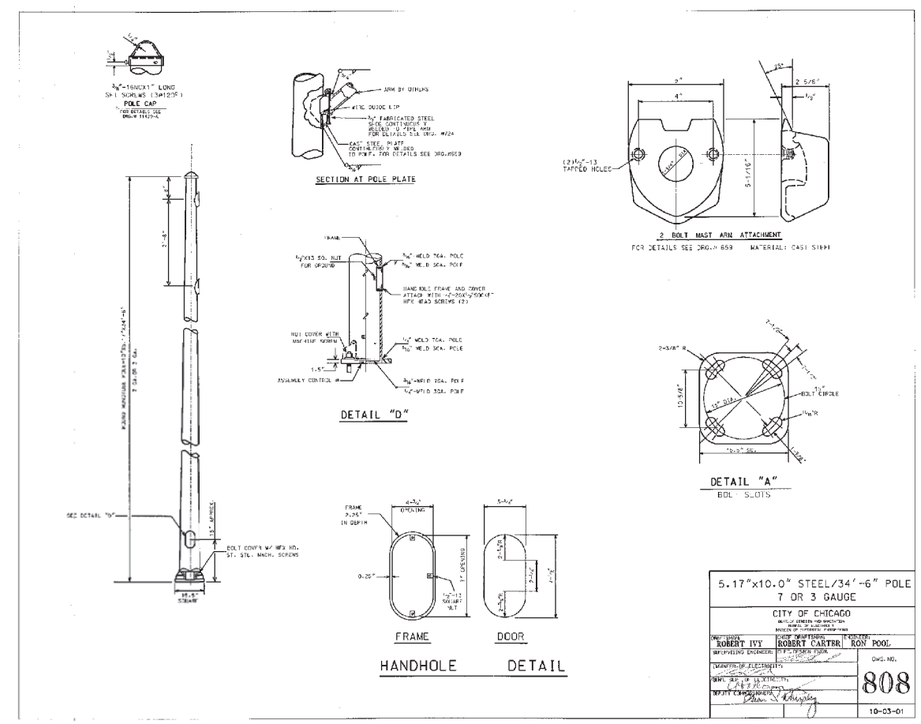

DESIGN BY:	YA		01/27/2020	ISSUE FOR BID	YA	YMD	EJL		
DRAWN BY:	ML		10/04/2019	ISSUE FOR OUC EFP	CJB	YMD	EJL		
CHECKED BY:	EJL		06/14/2019	ISSUE FOR 100% DESIGN	LAB	YMD	EJL		
APPROVED BY:	EJL		06/14/2019	ISSUE FOR PERMIT	LAB	YMD	EJL		
CDOT/APPROVED BY:		NO.	DATE	REVISIONS	DES.	DRW.	CHK.	DCCO	CDOT

MILHOUSE
333 South Wabash Avenue
Suite 2901
Chicago, IL 60604
t 312.994.8701
f 312.987.0071
www.milhouseinc.com

PERKINS+WILL
The Wrigley Building
410 North Michigan Ave.
Suite 1600
Chicago, IL 60611
t 312.755.0770
f 312.755.0775
www.perkinswill.com

CDOT
CHICAGO DEPARTMENT OF TRANSPORTATION
DIVISION OF ENGINEERING

154 N DAMEN AVE - DAMEN GREEN LINE STATION

ELECTRICAL DETAILS

CDOT PROJECT D-7-135

DATE: 01/27/2020

SPEC. NO.

DRAWING NO.
CE11-03

REVISION NO.

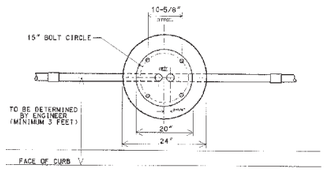

TOP VIEW

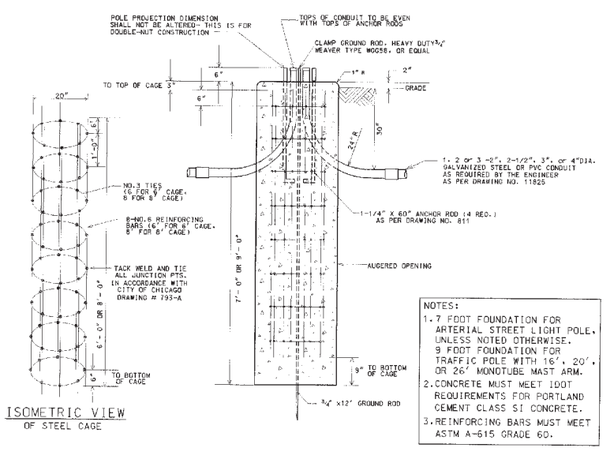

ISOMETRIC VIEW
OF STEEL CAGE

ELEVATION

NOTES:
1. 7 FOOT FOUNDATION FOR ARTERIAL STREET LIGHT POLE, UNLESS NOTED OTHERWISE. 9 FOOT FOUNDATION FOR TRAFFIC POLE WITH 16', 20', OR 26' MONOTUBE MAST ARM.
2. CONCRETE MUST MEET IDOT REQUIREMENTS FOR PORTLAND CEMENT CLASS SI CONCRETE.
3. REINFORCING BARS MUST MEET ASTM A-615 GRADE 60.

NOTE: HOLE FOR FOUNDATION MUST BE AUGURED IN UNDISTURBED SOIL

CODE	COMMODITY	SIZE	QUANTITY
05-3267-2940	READI-MIX CONCRETE	CU. YD.	0.82 OR 1.05
09-4001-	ELBOW, LARGE RADIUS	2",2-1/2",3",4"	VARIES
37-4190-0200	ANCHOR ROD	1-1/4" X 60"	4
05-5054-6810	RE-BAR CAGE	20"Ø X 6'(or 8')	1
09-7796-2500	GROUND ROD	3/4" x 10'-0"	1
09-2636-3240	GROUND ROD CLAMP	3/4"	1
09-2092-	GROUND BUSHING	2",2-1/2",3" OR 4"	VARIES

DATE	REVISION
8/21/02	SUPERCEDES DWG #818 DRAWN 4/21/81

FOUNDATION FOR 34'-6" ARTERIAL STREET LIGHT OR TRAFFIC SIGNAL POLE - 3 OR 7 GAUGE WITH 15" BOLT CIRCLE

CITY OF CHICAGO
DEPT. OF STREETS AND SANITATION
BUREAU OF ELECTRICITY
DIVISION OF ELECTRICAL ENGINEERING

DRAWN: GARNSEY | CHIEF DRAFTSMAN: R. CARTER | ENGINEER: D. GARNSEY
ELECTRICAL ENGINEER
ENGINEER OF ELECTRICITY
CHIEF ENGINEER
DEPUTY COMMISSIONER
DRAWING NO. 818
SIZE: 11" x 17" | SCALE: NONE | DATE: 8/21/02

CONDUIT INSTALLATION THROUGH EXISTING MANHOLE OR HANDHOLE WALL

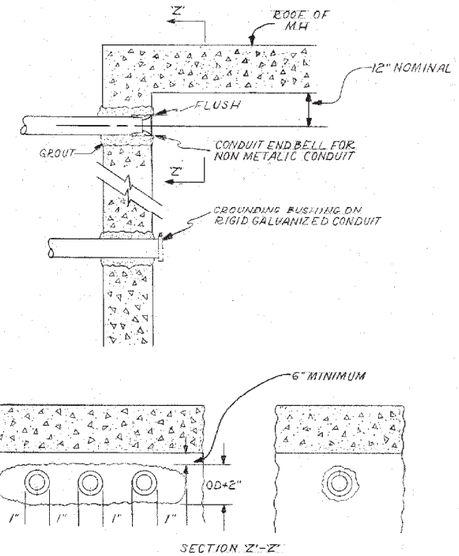

SECTION 'Z'-'Z'

OPENING THROUGH WALL TO BE KEPT TO MINIMUM SIZE TO ADMIT CONDUIT AND SUFFICIENT GROUT TO ASSURE SEALING WALL.

INSTALLATION METHOD OF INSTALLING CONDUIT THRU MANHOLE WALL

CITY OF CHICAGO
DEPT. OF STREETS AND SANITATION
BUREAU OF ELECTRICITY
DIVISION OF ELECTRICAL ENGINEERING

DRAWN: A.M. JOHNSON | CHECKED: R. SYCKOWSKI | ENGINEER: R.L. MARTIN
ENGINEER OF ELECTRICITY
DEPUTY COMMISSIONER
DRAWING NO. 814
SIZE: 8½" X 14" | SCALE: N.T.S. | DATE:

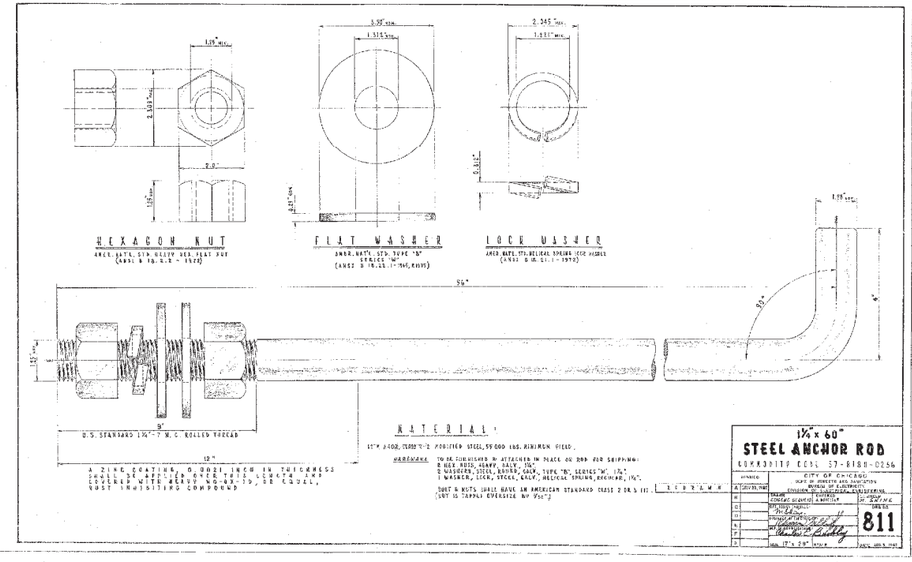

1¼ x 60"
STEEL ANCHOR ROD
CONTRACT NO. 57-8188-0256

REVISIONS		
A	2/21/96	
B		
C		
D		
E		
F		
G		
H		
J		
K		

CITY OF CHICAGO
DEPT. OF STREETS AND SANITATION
BUREAU OF ELECTRICITY
DIVISION OF ELECTRICAL ENGINEERING

DRAWN: A. CARTER | CHECKED: D. GARNSEY | ENGINEER: R. MARTIN
ENGINEER OF ELECTRICITY
DEPUTY COMMISSIONER
DRAWING NO. 811
SIZE: 11" x 29" | SCALE: | DATE: 2/21/96

DESIGN BY:	YA		01/27/2020	ISSUE FOR BID	YA	YMD	EJL		
DRAWN BY:	ML		10/04/2019	ISSUE FOR OUC EFP	CJB	YMD	EJL		
CHECKED BY:	EJL		06/14/2019	ISSUE FOR 100% DESIGN	LAB	YMD	EJL		
APPROVED BY:	EJL		06/14/2019	ISSUE FOR PERMIT	LAB	YMD	EJL		
CDOT/APPROVED BY:		NO.	DATE	REVISIONS	DES.	DRW.	CHK.	DCCO	CDOT

MILHOUSE
333 South Wabash Avenue
Suite 2901
Chicago, IL 60604
t 312.994.8701
f 312.987.0071
www.milhouseinc.com

PERKINS+WILL
The Wrigley Building
410 North Michigan Ave.
Suite 1600
Chicago, IL 60611
t 312.755.0770
f 312.755.0775
www.perkinswill.com

CDOT
CHICAGO DEPARTMENT OF TRANSPORTATION
DIVISION OF ENGINEERING

154 N DAMEN AVE - DAMEN GREEN LINE STATION

ELECTRICAL DETAILS

CDOT PROJECT D-7-135 | DATE: 01/27/2020

SPEC. NO.

DRAWING NO. CE11-04

REVISION NO.

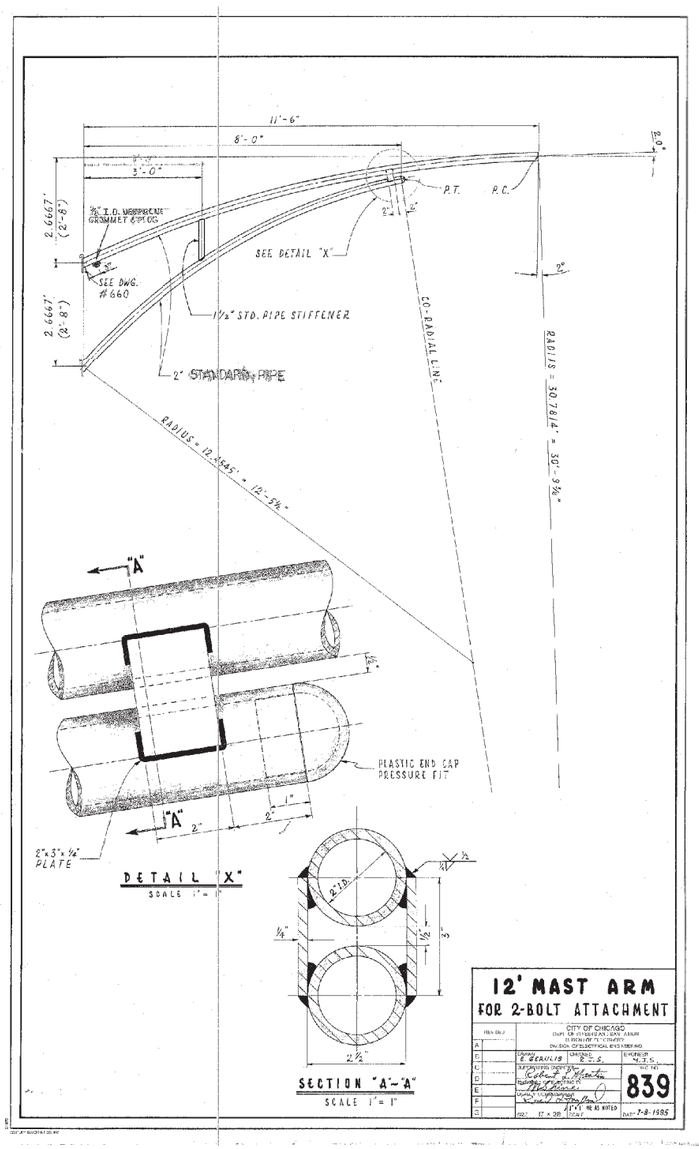

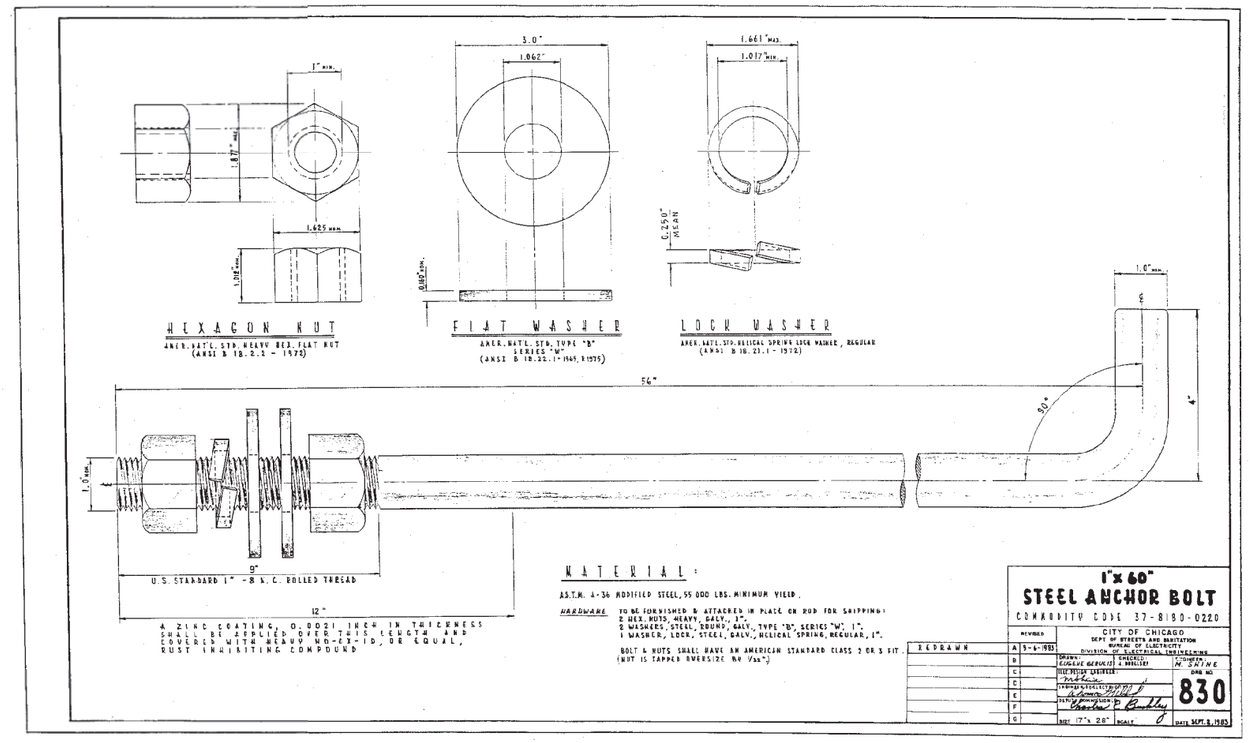

DESIGN BY:	YA		01/27/2020	ISSUE FOR BID	YA	YMD	EJL		
DRAWN BY:	ML		10/04/2019	ISSUE FOR OUC EFP	CJB	YMD	EJL		
CHECKED BY:	EJL		06/14/2019	ISSUE FOR 100% DESIGN	LAB	YMD	EJL		
APPROVED BY:	EJL		06/14/2019	ISSUE FOR PERMIT	LAB	YMD	EJL		
CDOT/APPROVED BY:		NO.	DATE	REVISIONS	DES.	DRW.	CHK.	DCCO	CDOT

MILHOUSE
333 South Wabash Avenue
Suite 2901
Chicago, IL 60604
t 312.994.8701
f 312.987.0071
www.milhouseinc.com

PERKINS+WILL
The Wrigley Building
410 North Michigan Ave.
Suite 1600
Chicago, IL 60611
t 312.755.0770
f 312.755.0775
www.perkinswill.com

CDOT
CHICAGO DEPARTMENT OF TRANSPORTATION
DIVISION OF ENGINEERING

154 N DAMEN AVE - DAMEN GREEN LINE STATION

ELECTRICAL DETAILS

CDOT PROJECT D-7-135

DATE: 01/27/2020

SPEC. NO.

DRAWING NO. CE11-05

REVISION NO.

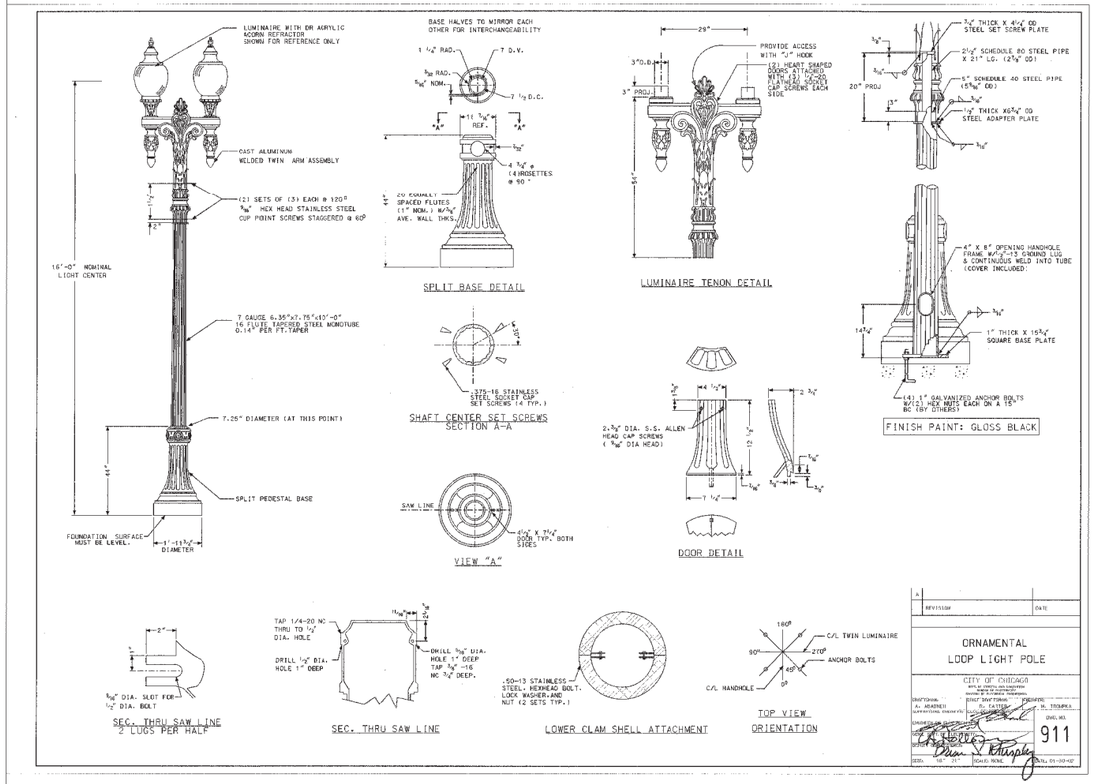

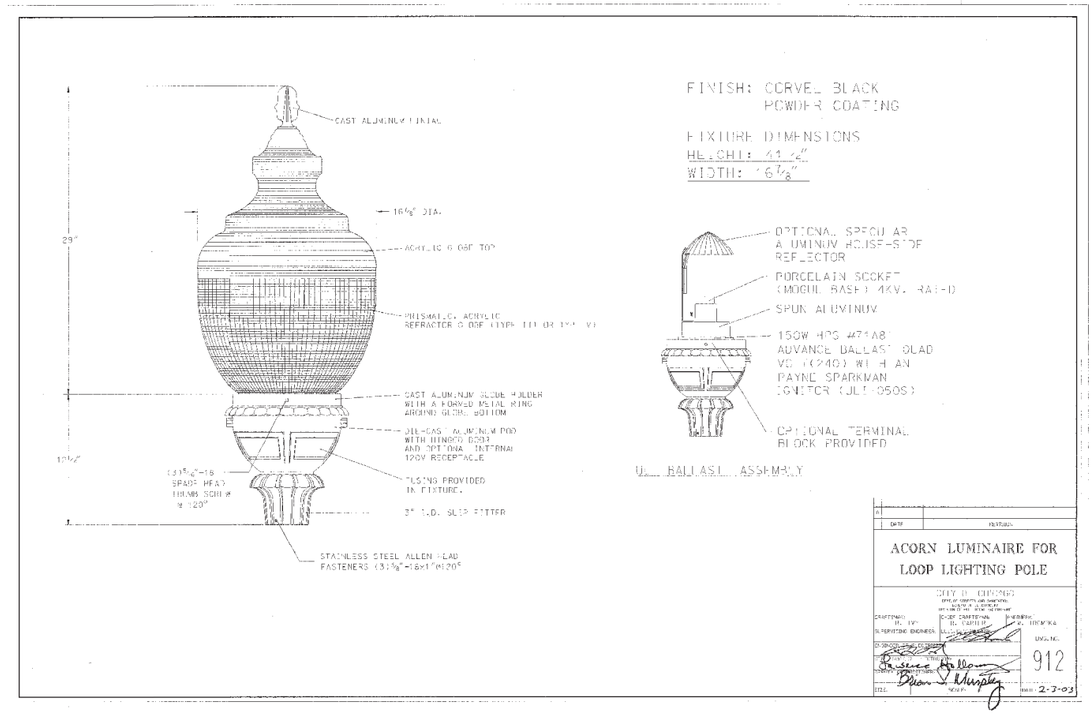

DESIGN BY:	YA		01/27/2020	ISSUE FOR BID	YA	YMD	EJL		
DRAWN BY:	ML		10/04/2019	ISSUE FOR OUC EFP	CJB	YMD	EJL		
CHECKED BY:	EJL		06/14/2019	ISSUE FOR 100% DESIGN	LAB	YMD	EJL		
APPROVED BY:	EJL		06/14/2019	ISSUE FOR PERMIT	LAB	YMD	EJL		
CDOT/APPROVED BY:		NO.	DATE	REVISIONS	DES.	DRW.	CHK.	DCCO	CDOT

MILHOUSE
333 South Wabash Avenue
Suite 2901
Chicago, IL 60604
t 312.994.8701
f 312.987.0071
www.milhouseinc.com

PERKINS+WILL
The Wrigley Building
410 North Michigan Ave.
Suite 1600
Chicago, IL 60611
t 312.755.0770
f 312.755.0775
www.perkinswill.com

CDOT
CHICAGO DEPARTMENT OF TRANSPORTATION
DIVISION OF ENGINEERING

154 N DAMEN AVE - DAMEN GREEN LINE STATION

ELECTRICAL DETAILS

CDOT PROJECT D-7-135

DATE: 01/27/2020

SPEC. NO.

DRAWING NO. CE11-06

REVISION NO.

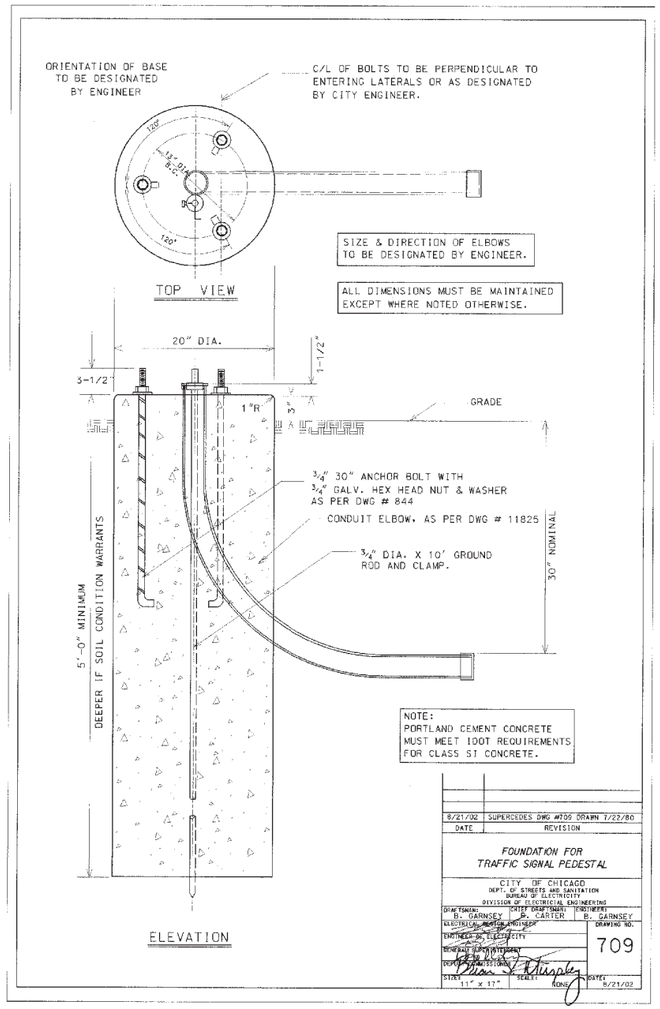

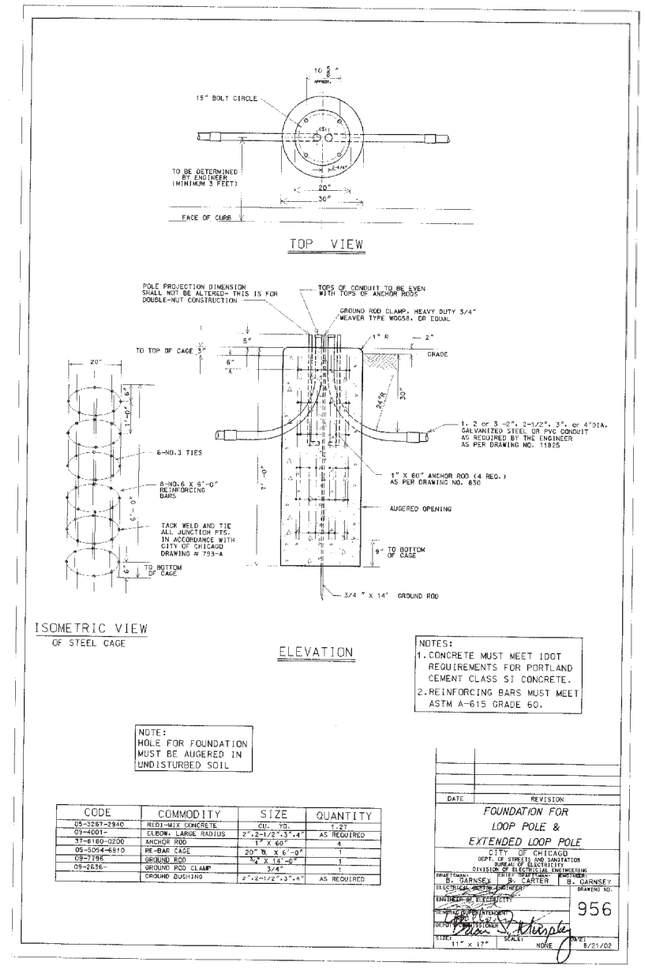

CODE	COMMODITY	SIZE	QUANTITY
05-3267-2940	REDI-MIX CONCRETE	CU. YD.	1.27
09-4001-	ELBOW, LARGE RADIUS	2",2-1/2",3",4"	AS REQUIRED
37-6160-0200	ANCHOR ROD	1" X 60"	4
09-0094-6810	RE-BAR CAGE	20" ⌀ X 6'-0"	1
09-7196-	GROUND ROD	3/4" X 14'-0"	1
09-2636-	GROUND ROD CLAMP	3/4"	1
	GROUND BUSHING	2",2-1/2",3",4"	AS REQUIRED

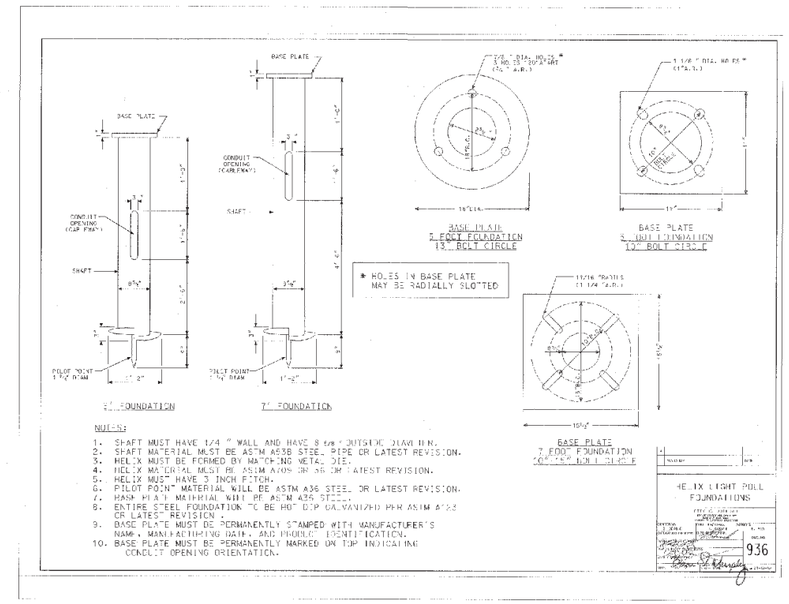

DESIGN BY:	YA		01/27/2020	ISSUE FOR BID	YA	YMD	EJL		
DRAWN BY:	ML		10/04/2019	ISSUE FOR OUC EFP	CJB	YMD	EJL		
CHECKED BY:	EJL		06/14/2019	ISSUE FOR 100% DESIGN	LAB	YMD	EJL		
APPROVED BY:	EJL		06/14/2019	ISSUE FOR PERMIT	LAB	YMD	EJL		
CDOT/APPROVED BY:		NO.	DATE	REVISIONS	DES.	DRW.	CHK.	DCCO	CDOT

MILHOUSE
333 South Wabash Avenue
Suite 2901
Chicago, IL 60604
t 312.994.8701
f 312.987.0071
www.milhouseinc.com

PERKINS+WILL
The Wrigley Building
410 North Michigan Ave.
Suite 1600
Chicago, IL 60611
t 312.755.0770
f 312.755.0775
www.perkinswill.com

CDOT
CHICAGO DEPARTMENT OF TRANSPORTATION
DIVISION OF ENGINEERING

154 N DAMEN AVE - DAMEN GREEN LINE STATION

ELECTRICAL DETAILS

CDOT PROJECT D-7-135

DATE: 01/27/2020

SPEC. NO.

DRAWING NO. CE11-07

REVISION NO.

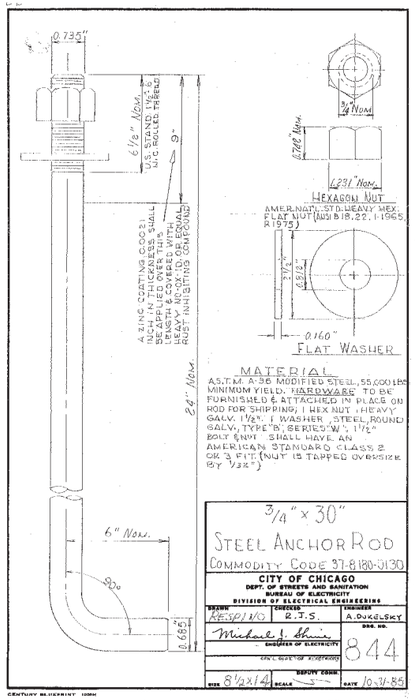

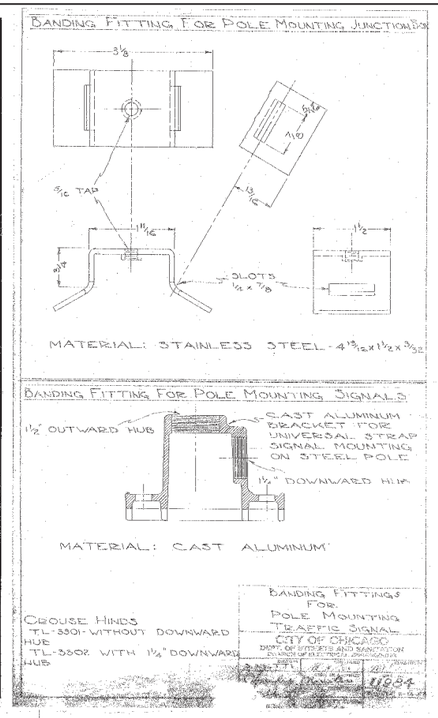

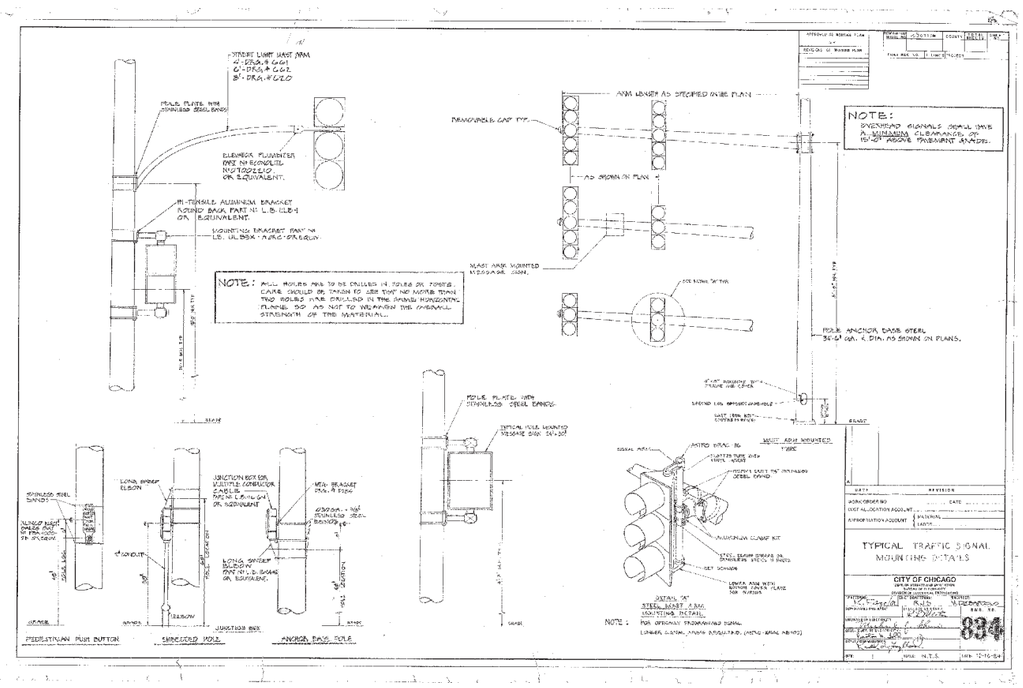

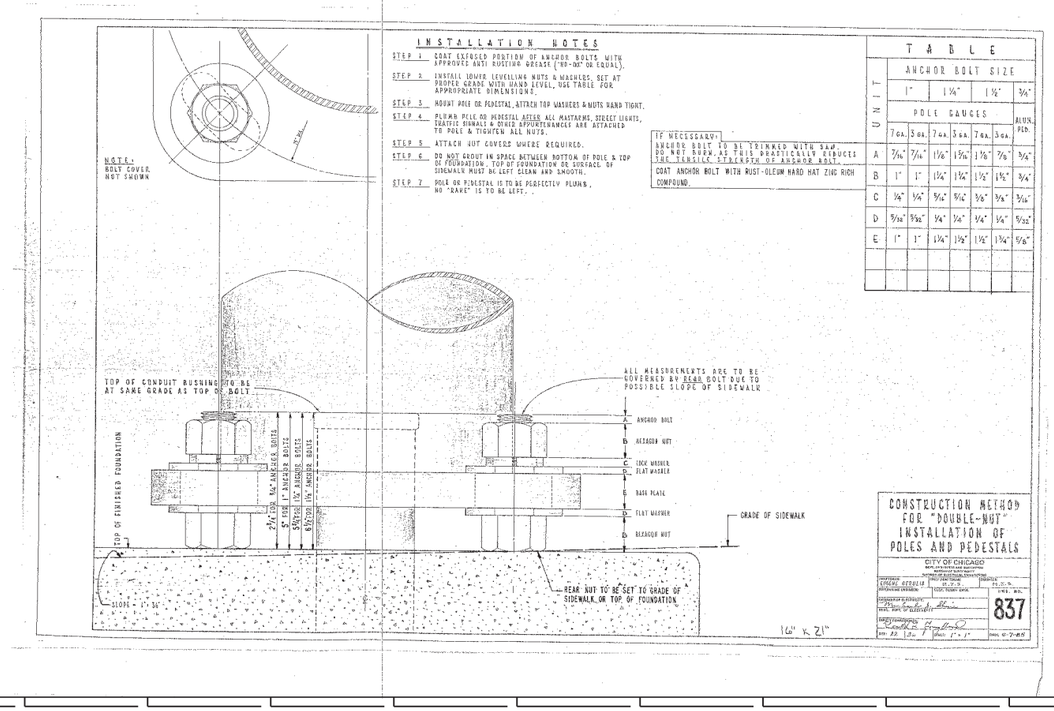

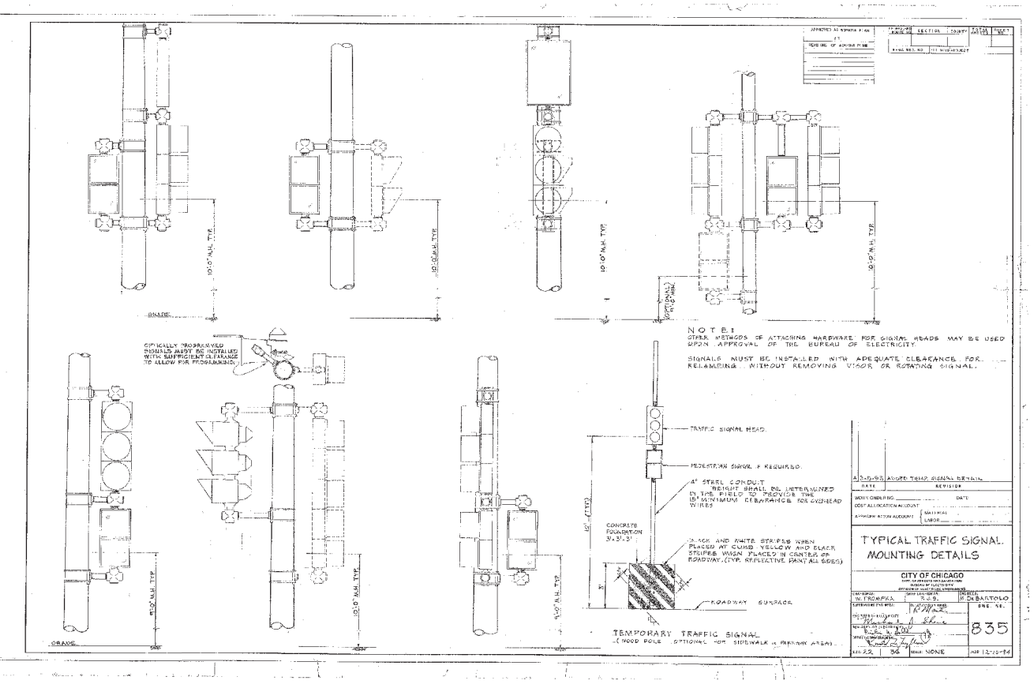

DESIGN BY:	YA		01/27/2020	ISSUE FOR BID	YA	YMD	EJL		
DRAWN BY:	ML		10/04/2019	ISSUE FOR OUC EFP	CJB	YMD	EJL		
CHECKED BY:	EJL		06/14/2019	ISSUE FOR 100% DESIGN	LAB	YMD	EJL		
APPROVED BY:	EJL		06/14/2019	ISSUE FOR PERMIT	LAB	YMD	EJL		
CDOT/APPROVED BY:		NO.	DATE	REVISIONS	DES.	DRW.	CHK.	DCCO	CDOT

MILHOUSE
333 South Wabash Avenue
Suite 2901
Chicago, IL 60604
t 312.994.8701
f 312.987.0071
www.milhouseinc.com

PERKINS+WILL
The Wrigley Building
410 North Michigan Ave.
Suite 1600
Chicago, IL 60611
t 312.755.0770
f 312.755.0775
www.perkinswill.com

CDOT
CHICAGO DEPARTMENT OF TRANSPORTATION
DIVISION OF ENGINEERING

154 N DAMEN AVE - DAMEN GREEN LINE STATION

ELECTRICAL DETAILS

CDOT PROJECT D-7-135 | DATE: 01/27/2020

SPEC. NO.

DRAWING NO. CE11-08

REVISION NO.

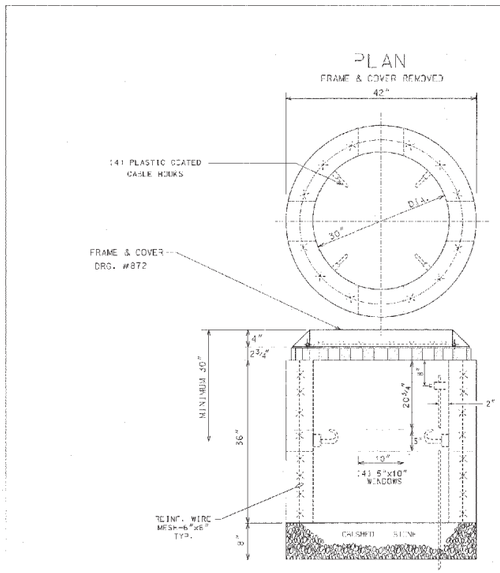

COMPLETE COMMODITY CODE NO. 05-6610-5310M			
CODE NO.	MATERIALS	SIZE	QUAN.
(1) 05-6610-5310	PRE-CAST HANDHOLE	30"X36"	1
(2) 05-9075-5470	STONE ¾" CRUSHED	BAG	5
(2) 05-5082-5330	SOND TUBE	30"	1
(2) 05-5082-5342	SOND TUBE	42"	1
(2) 05-3267-2940	CONC. REDI-MIX	CU. YD.	½
(2) 57-0770-0000	6" x 6" MESH	36"X10'	1
05-1452-9720	BRICK		24
02-4299-5524	FRAME MANHOLE	24"	1
02-4574-5040	COVER, MANHOLE	24"	1
09-7796-9312	GROUND ROD	¾"X12'	1
09-2630-3240	GROUND CLAMP		1

(1) PRE-CAST HANDHOLE SHALL INCLUDE CABLE HOOKS AND CONDUIT KNOCKOUTS.
(2) THESE ITEMS ARE FOR POURED-IN-PLACE HANDHOLES ONLY.

CONSTRUCTION NOTES:

1. 8" BED OF STONE FOR DRAINAGE.
2. ALL METALLIC CONDUITS ENTERING HANDHOLE SHALL EXTEND MINIMUM 1" & MAXIMUM 2" INSIDE INNER WALL AND BE EQUIPPED WITH AN APPROVED TYPE OF THREADED GROUNDING BUSHING.

30" DIA. CONCRETE HANDHOLE
CITY OF CHICAGO
867

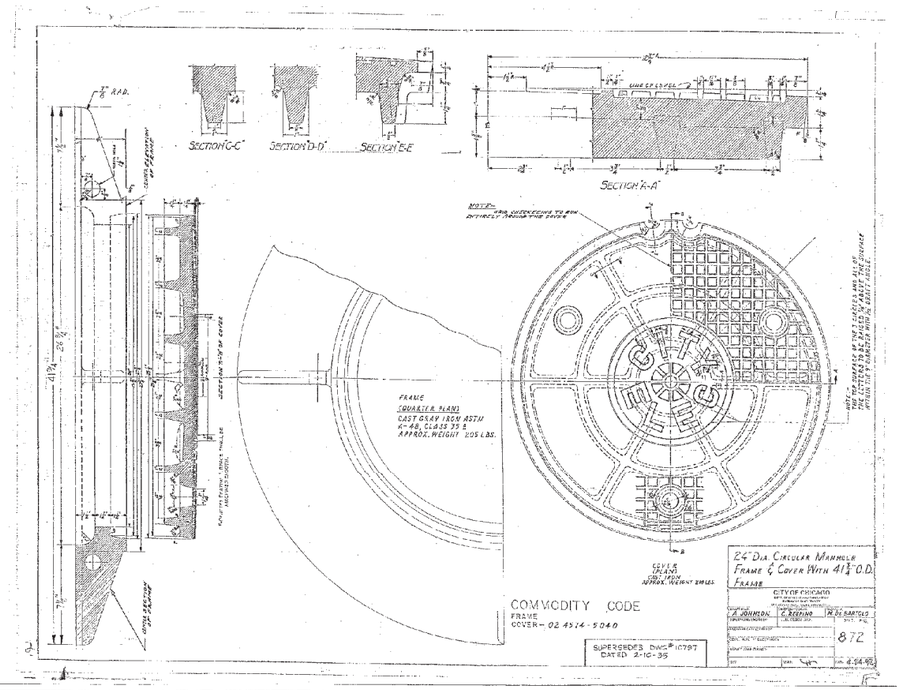

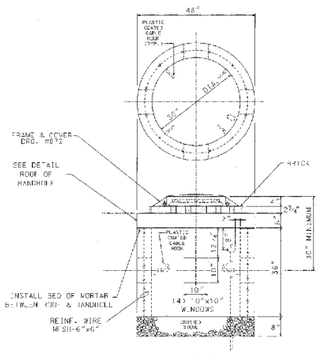

SIDE ELEVATION

COMPLETE COMMODITY CODE NO. 05-6610-5310M			
CODE NO.	MATERIALS	SIZE	QUAN.
(1) 05-6610-5312	PRE-CAST HANDHOLE	36" X 36"	1
(2) 05-6610-5312	PRE-CAST ROOF	SEE DETAIL	1
05-9075-5470	STONE ¾" CRUSHED	BAG	5
05-1452-9720	BRICK		24
02-4299-5524	FRAME, MANHOLE	24"	1
02-4574-5624	COVER, MANHOLE	24"	1
09-7796-9312	GROUND ROD	¾" x12'	1
09-2630-3240	GROUND CLAMP		1
(3) 05-5082-5330	SOND TUBE	36"	1
(3) 05-5082-5342	SOND TUBE	48"	1
(3) 05-3267-2940	CONC. REDI-MIX	CU. YD.	½
(3) 20-5472-9630	REINFORCING BAR	#3 (⅜")	20'
(3) 20-5472-9630	REINFORCING BAR	#3 (⅜")	8'
(3) 20-5472-9640	REINFORCING BAR	#4 (½")	4'
(3) 57-0770-0000	(MESH 6" X6")	36" X 11'	1

(1) PRECAST HANDHOLE SHALL INCLUDE CABLE HOOKS AND CONDUIT KNOCKOUTS.
(2) PRE-CAST ROOF SHALL INCLUDE LIFTING EYES.
(3) THESE ITEMS ARE FOR POURED-IN-PLACE HANDHOLES ONLY.

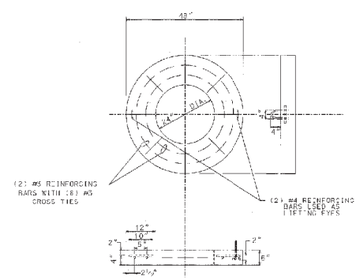

DETAIL-ROOF OF HANDHOLE

CONSTRUCTION NOTES:

1 - 8" BED OF STONE FOR DRAINAGE.

2 - ALL METALLIC CONDUIT(S) ENTERING HANDHOLE SHALL EXTEND MIN. 1" & MAX. OF 3" INSIDE INNER WALL & BE EQUIPPED WITH AN APPROVED TYPE THREADED GROUNDING BUSHING.

36" DIA. HEAVY DUTY CONCRETE HANDHOLE WITH 24" FRAME & COVER
CITY OF CHICAGO
866

TOP VIEW
FRAME, COVER & TOP OF HANDHOLE REMOVED

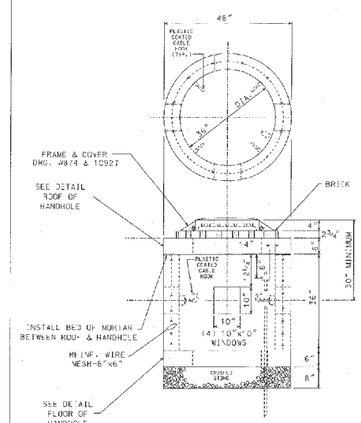

SIDE ELEVATION

COMPLETE COMMODITY CODE NO. 05-6610-5310M			
CODE NO.	MATERIALS	SIZE	QUAN.
(1) 05-6610-5312	PRE-CAST HANDHOLE	36" X 36"	1
(2) 05-6610-5312	PRE-CAST ROOF & FLOOR	SEE DETAIL	2
05-9075-5470	STONE ¾" CRUSHED	BAG	5
05-1452-9720	BRICK		24
02-4299-5524	FRAME, MANHOLE	30"	1
02-4574-5624	COVER, MANHOLE	30"	1
09-7796-9312	GROUND ROD	¾" x12'	1
09-2630-3240	GROUND CLAMP		1
(3) 05-5082-5330	SOND TUBE	36"	1
(3) 05-5082-5342	SOND TUBE	48"	1
(3) 05-3267-2940	CONC. REDI-MIX	CU. YD.	1
(3) 20-5472-9630	REINFORCING BAR	#3 (⅜")	40'
(3) 20-5472-9630	REINFORCING BAR	#3 (⅜")	16'
(3) 20-5472-9640	REINFORCING BAR	#4 (½")	8'
(3) 57-0770-0000	(MESH 6" X6")	36" X 11'	1

(1) PRE-CAST HANDHOLE SHALL INCLUDE CABLE HOOKS AND CONDUIT KNOCKOUTS.
(2) PRE-CAST ROOF & FLOOR SHALL INCLUDE LIFTING EYES.
(3) THESE ITEMS ARE FOR POURED-IN-PLACE HANDHOLES ONLY.

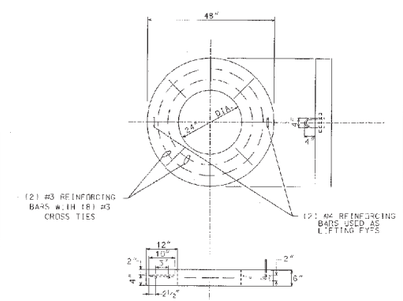

DETAIL-ROOF & FLOOR OF HAND-HOLE

CONSTRUCTION NOTES:

1 - 8" BED OF STONE FOR DRAINAGE.

2 - ALL METALLIC CONDUIT(S) ENTERING HANDHOLE SHALL EXTEND MIN. 1" & MAX. OF 3" INSIDE INNER WALL & BE EQUIPPED WITH AN APPROVED TYPE THREADED GROUNDING BUSHING.

36" DIA. HEAVY DUTY CONCRETE HANDHOLE WITH 30" FRAME & COVER FOR STREET INSTALLATION
CITY OF CHICAGO
871

DESIGN BY:	YA		01/27/2020	ISSUE FOR BID	YA	YMD	EJL		
DRAWN BY:	ML		10/04/2019	ISSUE FOR OUC EFP	CJB	YMD	EJL		
CHECKED BY:	EJL		06/14/2019	ISSUE FOR 100% DESIGN	LAB	YMD	EJL		
APPROVED BY:	EJL		06/14/2019	ISSUE FOR PERMIT	LAB	YMD	EJL		
CDOT/APPROVED BY:		NO.	DATE	REVISIONS	DES.	DRW.	CHK.	DCCO	CDOT

MILHOUSE
333 South Wabash Avenue
Suite 2901
Chicago, IL 60604
t 312.994.8701
f 312.987.0071
www.milhouseinc.com

PERKINS+WILL
The Wrigley Building
410 North Michigan Ave.
Suite 1600
Chicago, IL 60611
t 312.755.0770
f 312.755.0775
www.perkinswill.com

CDOT
CHICAGO DEPARTMENT OF TRANSPORTATION
DIVISION OF ENGINEERING

154 N DAMEN AVE - DAMEN GREEN LINE STATION

ELECTRICAL DETAILS

CDOT PROJECT D-7-135

DATE: 01/27/2020

SPEC. NO.

DRAWING NO. CE11-09

REVISION NO.

- DRILL (4) 1/2" DIA. HOLES IN BOTTOM OF CABINET & TOP OF BALLAST HOUSING BASE. BOLT CABINET TO B.H.B. USING (4) 3/8" X 2 1/2" BOLTS.
- OPENINGS IN BOTTOM OF CABINET & TOP OF B.H.B. MAY BE ENLARGED TO A MAX. OF 5" X 10" TO FACILITATE ADDITIONAL CABLE.
- NUMBER & SIZE OF CONDUITS TO BE SHOWN ON CONSTRUCTION DRAWINGS.
- SEE DRAWING # 884 FOR ELECTRICAL PANEL DETAILS.
- SEE DRAWINGS # 862 & 864 FOR WIRING DIAGRAM.

CODE	DRWG.	MATERIAL	SIZE	QUANT.
05-5082-5324	---	FIBER FORM	20" ø	4'
05-3267-2940	---	CONCRETE	CU. YD.	0.7
37-8180-0236	811	ANCHOR ROD	1" X 60"	4
09-7796-9200	---	GROUND ROD	3/4" X 10'	1
09-2636-3240	---	CLAMP, GROUND ROD	3/4"	1
09-3392-7850		CABINET ALUMINUM	41"X25"X16"	1
37-2130-4280	785	BALLAST HOUSING BS	1'-4" X 1'-8"	1

NOTE:
HENNESSY "G" CABINET # 212374 OR U.L. APPROVED EQUIVALENT.

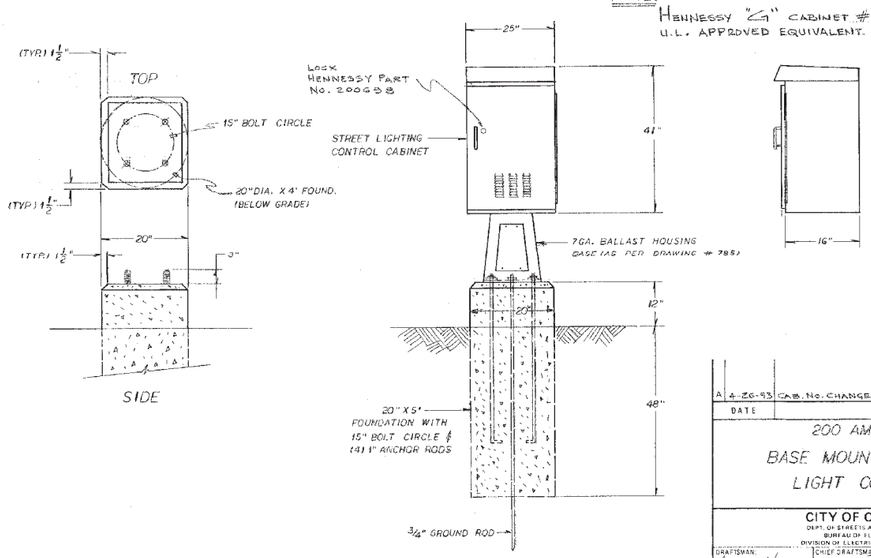

DATE	REVISION
A 4-26-93	CAB. NO. CHANGED CITY NAME REMOVED

200 AMP.
BASE MOUNTED STREET LIGHT CONTROLLER

CITY OF CHICAGO
DEPT. OF STREETS AND SANITATION
BUREAU OF ELECTRICITY
DIVISION OF ELECTRICAL ENGINEERING

DRAFTSMAN: ADUANDO VIVARO
SUPERVISING ENGINEER: B. CARTER
ENGINEER OF ELECTRICITY: A. DEBELSKY
GEN'L. SUPT. OF ELECTRICITY: A. DEBELSKY
DEPUTY COMMISSIONER:
CHIEF DRAFTSMAN: CARMEN LEPINO
ELEC. DESIGN ENGR.: M. DEBARTOLO
DWG. NO. 880
SIZE 16 | 21 SCALE: DATE:

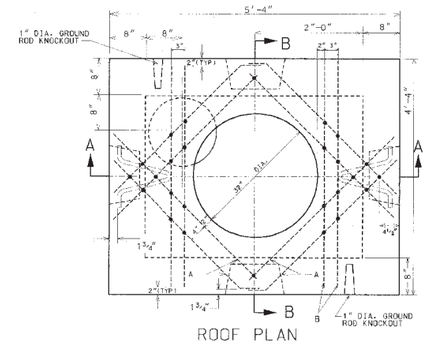

ROOF PLAN

EXCAVATION (CONSTRUCTION INFORMATION)	
COMPLETE MANHOLE	5.0 CU. YDS.
NEW ROOF ONLY	2.0 CU. YDS
SHEETING MANHOLE	150.0 SQ. FT.

#5 REINFORCING BARS			
BAR	LENGTH	NO. OF RODS	TOTAL FT.
A	2'-9"	8	22'-0"
B	4'-0"	4	16'-0"

MATERIALS FOR ROOF ONLY	
CONCRETE	0.5 CU. YDS.
REINFORCING BARS #5	38'

DRG.	MATERIAL	CODE	SIZE	NO. REQ.
	FORM FOR MANHOLE	17-4674-6000 17-4646-5520	3x6x4	1
	CONDUIT END BELL		AS REQ.	
	TILE, SEWER	39-4038-3200	12"/24"	
	SLAB BOLSTER		2"	20'
	BAR, REINFORCING	20-5472-9650	5/8" ø	38'
	TIE WIRE	13-9938-6106	#200A	35'
7878	PULLING IRON	02-4483-6970	3/4" ø	2
	CONCRETE	05-3267-2940	3 CU.	YDS
	SEWER BRICK	05-1452-9720	STD.	50
10792	GRATE FOR SUMP	02-4368-7100	15" ø	1
	GROUND ROD	09-7796-9200	3/4"x10'	1
	GROUND ROD CLAMP	09-2636-3240	3/4"	1
	CRUSHED STONE	05-9057-5471	3/4"	ONE BAG
874	MANHOLE FRAME	02-4299-5524	30"	1
10927	MANHOLE COVER	02-4574-5040	30"	1
	CONC. CHANNEL INSERT	02-4574-5040	3'	8

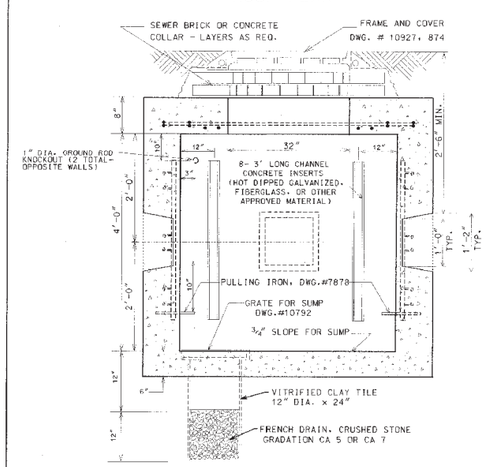

SECTION A-A

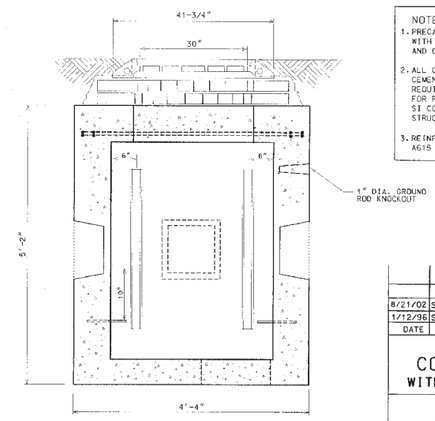

SECTION B-B

NOTES:
1. PRECAST MANHOLES MUST BE PROVIDED WITH CHANNEL INSERTS, PULLING IRONS, AND CONDUIT KNOCK-OUTS.
2. ALL CONCRETE MUST BE PORTLAND CEMENT CONCRETE MEETING IDOT REQUIREMENTS FOR CLASS PC CONCRETE FOR PRE-CAST STRUCTURES, OR CLASS SI CONCRETE FOR CAST-IN-PLACE STRUCTURES.
3. REINFORCING BARS MUST MEET ASTM A615 GRADE 60.

DATE	REVISION
8/21/02	SUPERCEDES DWG. 729 DATED JAN 12, 1996
1/12/96	SUPERCEDES DWG. 729 DATED NOV. 21, 1973

3' x 4' x 4'
CONCRETE MANHOLE
WITH 30" FRAME AND COVER

CITY OF CHICAGO
DEPT. OF STREETS AND SANITATION
BUREAU OF ELECTRICITY
DIVISION OF ELECTRICAL ENGINEERING

DRAFTSMAN: B. GARNSEY
SUPV. DRAFTSMAN: R. CARTER
ENGINEER: B. GARNSEY
ELECTRICAL DESIGN ENGINEER
ENGINEER OF ELECTRICITY
GENERAL SUPERINTENDENT
DEPUTY COMMISSIONER
DRAWING NO. 729
SIZE: 17" x 22" SCALE: NONE DATE: 8/21/02

DESIGN BY:	YA		01/27/2020	ISSUE FOR BID	YA	YMD	EJL		
DRAWN BY:	ML		10/04/2019	ISSUE FOR OUC EFP	CJB	YMD	EJL		
CHECKED BY:	EJL		06/14/2019	ISSUE FOR 100% DESIGN	LAB	YMD	EJL		
APPROVED BY:	EJL		06/14/2019	ISSUE FOR PERMIT	LAB	YMD	EJL		
CDOT/APPROVED BY:		NO.	DATE	REVISIONS	DES.	DRW.	CHK.	DCCO	CDOT

MILHOUSE
333 South Wabash Avenue
Suite 2901
Chicago, IL 60604
t 312.994.8701
f 312.987.0071
www.milhouseinc.com

PERKINS+WILL
The Wrigley Building
410 North Michigan Ave.
Suite 1600
Chicago, IL 60611
t 312.755.0770
f 312.755.0775
www.perkinswill.com

CDOT
CHICAGO DEPARTMENT OF TRANSPORTATION
DIVISION OF ENGINEERING

154 N DAMEN AVE - DAMEN GREEN LINE STATION

ELECTRICAL DETAILS

CDOT PROJECT D-7-135 | DATE: 01/27/2020

SPEC. NO.
DRAWING NO. CE11-10
REVISION NO.

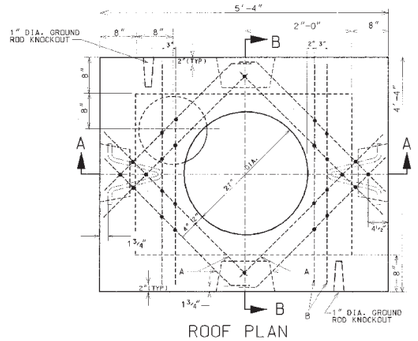

ROOF PLAN

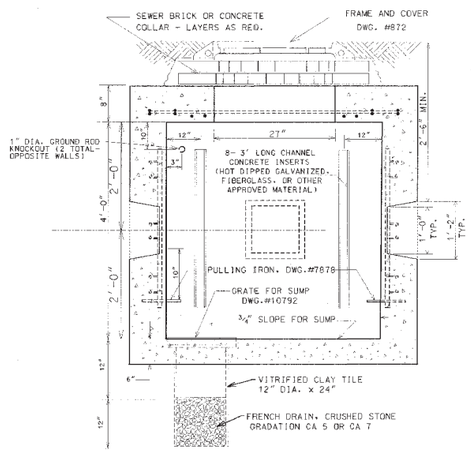

SECTION A-A

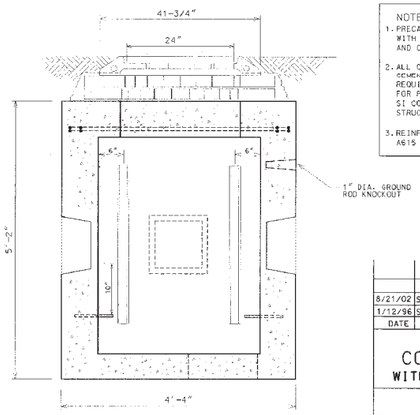

SECTION B-B

EXCAVATION (CONSTRUCTION) (INFORMATION)
COMPLETE MANHOLE 6.0 CU. YDS.
NEW ROOF ONLY 2.0 CU. YDS
SHEETING MANHOLE 150.0 SQ. FT.

#5 REINFORCING BARS			
BAR	LENGTH	NO. OF RODS	TOTAL FT.
A	3'-4"	4	13'-4"
B	4'-0"	10	40'-0"

MATERIALS FOR ROOF ONLY	
CONCRETE	0.45 CU. YDS.
REINFORCING BARS #5	54'

DRG.	MATERIAL	CODE	SIZE	NO. REQ.
	FORM FOR MANHOLE	17-4674-8000 17-4648-5370	3'x6'x4'	1
	CONDUIT END BELL		AS REQ.	
	TILE, SEWER	39-4036-3200	12"/24"	1
	SLAB BOLSTER		2"	20'
	BAR, REINFORCING	20-5472-9650	⅝" ø	54'
	TIE WIRE	13-9938-6106	#200A	35'
7878	PULLING IRON	02-4483-6970	¾" ø	2
	CONCRETE	05-3267-2940	3 CU. YDS	
	SEWER BRICK	05-1452-9720	STD.	50
10792	GRATE FOR SUMP	02-4368-7100	15" ø	1
	GROUND ROD	09-7796-9200	¾"x10'	1
	GROUND ROD CLAMP	09-2836-3240	¾"	1
	CRUSHED STONE	05-9057-6471	¾"	TWO BAGS
872	MANHOLE FRAME	02-4293-5524	24"	1
872	MANHOLE COVER	02-4574-5040	24"	1
	CONC. CHANNEL INSERT	02-4574-5040	3'	8

NOTES:
1. PRECAST MANHOLES MUST BE PROVIDED WITH CHANNEL INSERTS, PULLING IRONS, AND CONDUIT KNOCK-OUTS.
2. ALL CONCRETE MUST BE PORTLAND CEMENT CONCRETE MEETING THE REQUIREMENTS FOR CLASS PC CONCRETE FOR PRE-CAST STRUCTURES, OR CLASS SI CONCRETE FOR CAST-IN-PLACE STRUCTURES.
3. REINFORCING BARS MUST MEET ASTM A615 GRADE 60.

DATE	REVISION
8/21/02	SUPERCEDES DWG. 730 DATED JAN 12, 1996
1/12/96	SUPERCEDES DWG. 730 DATED NOV. 21, 1973

3' x 4' x 4'
CONCRETE MANHOLE
WITH 24" FRAME AND COVER

CITY OF CHICAGO
DEPT. OF STREETS AND SANITATION
BUREAU OF ELECTRICITY
DIVISION OF ELECTRICAL ENGINEERING

DRAFTSMAN: B. GARNSEY
CHIEF DRAFTSMAN: R. CARTER
ENGINEER: B. GARNSEY
ELECTRICAL DESIGN ENGINEER
ENGINEER OF ELECTRICITY
GENERAL SUPERINTENDENT
DEPUTY COMMISSIONER
DRAWING NO. 730
SIZE: 17" x 22" SCALE: NONE DATE: 8/21/02

DIMENSIONS FOR LOCATIONS OF ANCHOR BOLTS TO BE STRICTLY ADHERED TO.

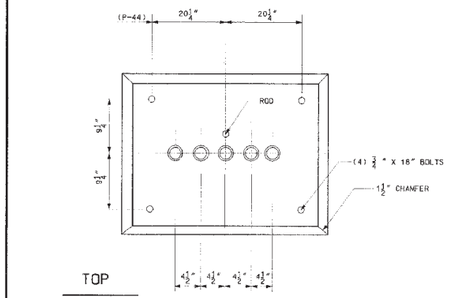

TOP

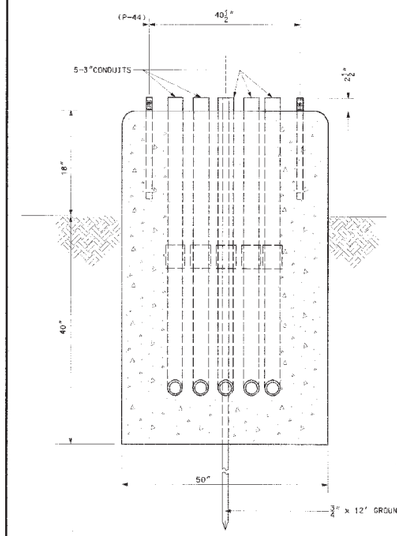

FRONT

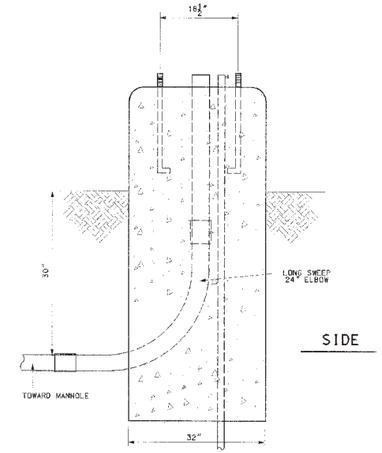

SIDE

REV. 4
SUPERSEDES DWG. # 888 DATED 6-25-1999

TYPE "P" FOUNDATION
FOR BASE MOUNTED
TRAFFIC SIGNAL CONTROL CABINET

CITY OF CHICAGO
DEPT. OF STREETS AND SANITATION
BUREAU OF ELECTRICITY
DIVISION OF ELECTRICAL ENGINEERING

DRAFTSMAN: D. P. AVENDO
CHIEF DRAFTSMAN: R. CARTER
ENGINEER: C. L. TAMENDT
SUPERVISING ENGINEER: ELEC. DESIGN ENGR.
ENGINEER OF ELECTRICITY:
GEN'L SUPT. OF ELECTRICITY:
DEPUTY COMMISSIONER:
DWG. NO. 888
SIZE: 16" x 22" SCALE: NONE DATE: 6-19-02

DESIGN BY:	YA		01/27/2020	ISSUE FOR BID	YA	YMD	EJL		
DRAWN BY:	ML		10/04/2019	ISSUE FOR OUC EFP	CJB	YMD	EJL		
CHECKED BY:	EJL		06/14/2019	ISSUE FOR 100% DESIGN	LAB	YMD	EJL		
APPROVED BY:	EJL		06/14/2019	ISSUE FOR PERMIT	LAB	YMD	EJL		
CDOT/APPROVED BY:		NO.	DATE	REVISIONS	DES.	DRW.	CHK.	DCCO	CDOT

MILHOUSE
333 South Wabash Avenue
Suite 2901
Chicago, IL 60604
t 312.994.8701
f 312.987.0071
www.milhouseinc.com

PERKINS+WILL
The Wrigley Building
410 North Michigan Ave.
Suite 1600
Chicago, IL 60611
t 312.755.0770
f 312.755.0775
www.perkinswill.com

CDOT
CHICAGO DEPARTMENT OF TRANSPORTATION
DIVISION OF ENGINEERING

154 N DAMEN AVE - DAMEN GREEN LINE STATION

ELECTRICAL DETAILS

CDOT PROJECT D-7-135 | DATE: 01/27/2020

SPEC. NO.

DRAWING NO. CE11-11

REVISION NO.

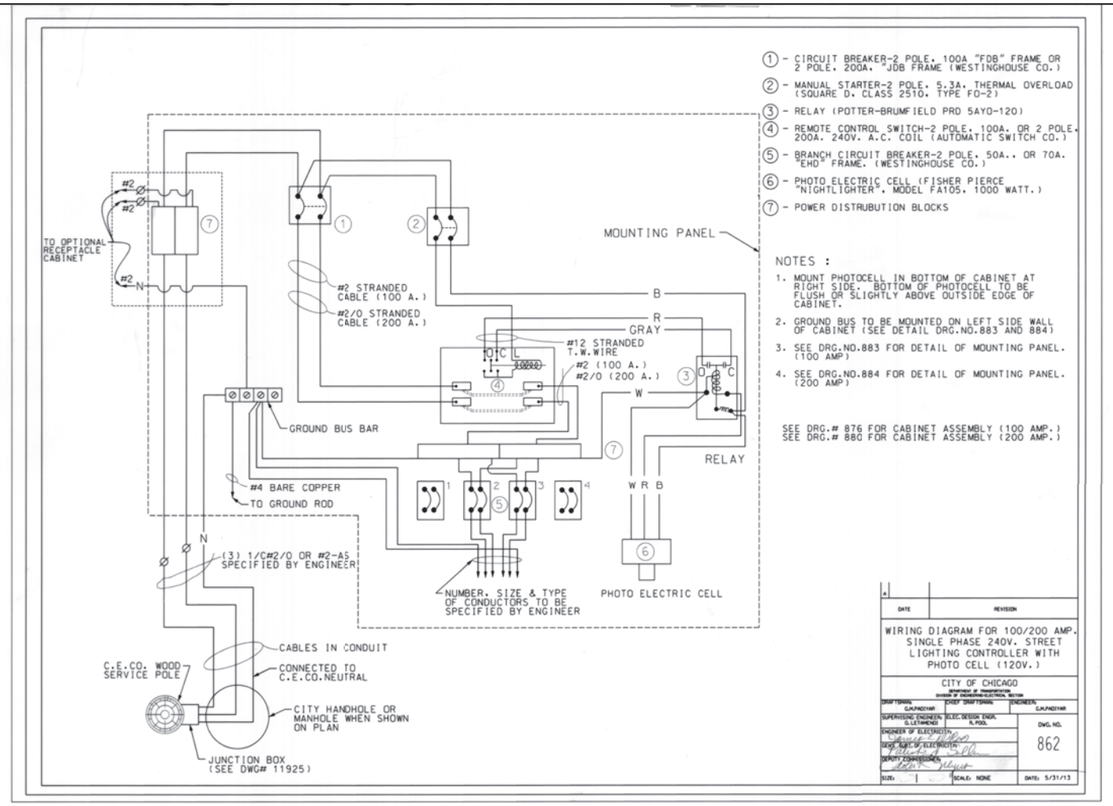

1 - CIRCUIT BREAKER-2 POLE. 100A "FDB" FRAME OR 2 POLE. 200A. "JDB FRAME (WESTINGHOUSE CO.)

2 - MANUAL STARTER-2 POLE. 5.3A. THERMAL OVERLOAD (SQUARE D. CLASS 2510. TYPE FO-2)

3 - RELAY (POTTER-BRUMFIELD PRD 5AYO-120)

4 - REMOTE CONTROL SWITCH-2 POLE. 100A. OR 2 POLE. 200A. 240V. A.C. COIL (AUTOMATIC SWITCH CO.)

5 - BRANCH CIRCUIT BREAKER-2 POLE. 50A.. OR 70A. "EHD" FRAME. (WESTINGHOUSE CO.)

6 - PHOTO ELECTRIC CELL (FISHER PIERCE "NIGHTLIGHTER". MODEL FA105. 1000 WATT.)

7 - POWER DISTRUBUTION BLOCKS

NOTES :

1. MOUNT PHOTOCELL IN BOTTOM OF CABINET AT RIGHT SIDE. BOTTOM OF PHOTOCELL TO BE FLUSH OR SLIGHTLY ABOVE OUTSIDE EDGE OF CABINET.
2. GROUND BUS TO BE MOUNTED ON LEFT SIDE WALL OF CABINET (SEE DETAIL DRG.NO.883 AND 884)
3. SEE DRG.NO.883 FOR DETAIL OF MOUNTING PANEL. (100 AMP)
4. SEE DRG.NO.884 FOR DETAIL OF MOUNTING PANEL. (200 AMP)

SEE DRG.# 876 FOR CABINET ASSEMBLY (100 AMP.)
SEE DRG.# 880 FOR CABINET ASSEMBLY (200 AMP.)

DATE	REVISION

WIRING DIAGRAM FOR 100/200 AMP. SINGLE PHASE 240V. STREET LIGHTING CONTROLLER WITH PHOTO CELL (120V.)

CITY OF CHICAGO
DEPARTMENT OF TRANSPORTATION
DIVISION OF ENGINEERING-ELECTRICAL SECTION

DRAFTSPERSON: G.KUNDZYAR | CHIEF DRAFTSPERSON: | ENGINEER: G.KUNDZYAR
SUPERVISING ENGINEER: S.LETHEMEN | ELEC.DESIGN ENGR.: R.POOL | DWG. NO. 862
ENGINEER OF ELECTRICITY
CHIEF ENGR. OF ELECTRICITY
DEPUTY COMMISSIONER

SIZE: | SCALE: NONE | DATE: 5/31/13

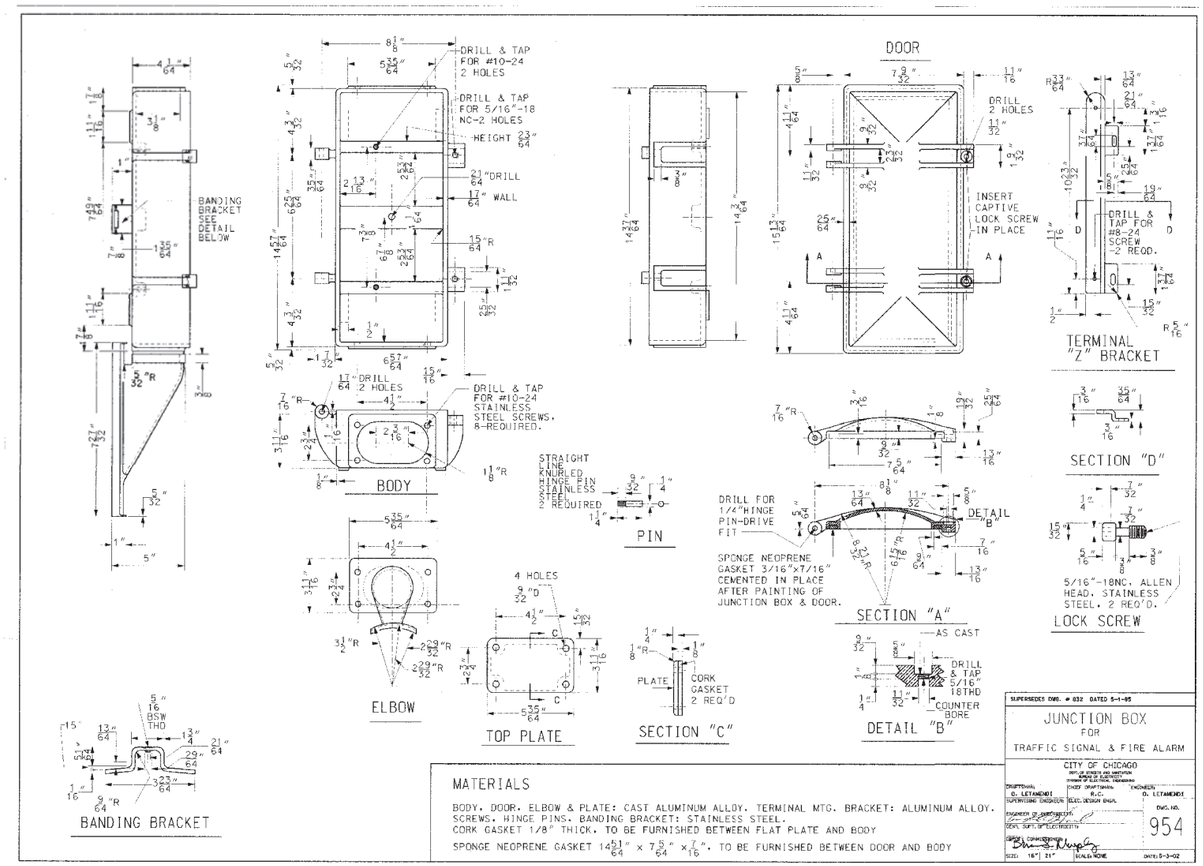

MATERIALS

BODY, DOOR, ELBOW & PLATE: CAST ALUMINUM ALLOY. TERMINAL MTG. BRACKET: ALUMINUM ALLOY. SCREWS, HINGE PINS, BANDING BRACKET: STAINLESS STEEL.
CORK GASKET 1/8" THICK, TO BE FURNISHED BETWEEN FLAT PLATE AND BODY
SPONGE NEOPRENE GASKET 14 51/64" x 7 5/64" x 7/16", TO BE FURNISHED BETWEEN DOOR AND BODY

SUPERSEDES DWG. # 832 DATED 5-1-95

JUNCTION BOX FOR TRAFFIC SIGNAL & FIRE ALARM

CITY OF CHICAGO
DEPT. OF SIGNALS AND ARTERIALS
BUREAU OF ELECTRICAL OPERATIONS
DIVISION OF ELECTRICAL EQUIPMENT

DRAFTSMAN: D. LETAMENDI | CHIEF DRAFTSMAN: R.C. | ENGINEER: D. LETAMENDI
SUPERVISING ENGINEER: | ELEC. DESIGN ENGR.: | DWG. NO. 954
ENGINEER OF ELECTRICITY
CHIEF ENGR. OF ELECTRICITY
DEPUTY COMMISSIONER

SIZE: 18" x 24" | SCALE: NONE | DATE: 5-3-02

DESIGN BY:	YA		01/27/2020	ISSUE FOR BID	YA	YMD	EJL		
DRAWN BY:	ML		10/04/2019	ISSUE FOR OUC EFP	CJB	YMD	EJL		
CHECKED BY:	EJL		06/14/2019	ISSUE FOR 100% DESIGN	LAB	YMD	EJL		
APPROVED BY:	EJL		06/14/2019	ISSUE FOR PERMIT	LAB	YMD	EJL		
CDOT/APPROVED BY:		NO.	DATE	REVISIONS	DES.	DRW.	CHK.	DCCO	CDOT

MILHOUSE
333 South Wabash Avenue
Suite 2901
Chicago, IL 60604
t 312.994.8701
f 312.987.0071
www.milhouseinc.com

PERKINS+WILL
The Wrigley Building
410 North Michigan Ave.
Suite 1600
Chicago, IL 60611
t 312.755.0770
f 312.755.0775
www.perkinswill.com

CDOT
CHICAGO DEPARTMENT OF TRANSPORTATION
DIVISION OF ENGINEERING

154 N DAMEN AVE - DAMEN GREEN LINE STATION

ELECTRICAL DETAILS

CDOT PROJECT D-7-135 | DATE: 01/27/2020

SPEC. NO.

DRAWING NO. CE11-12

REVISION NO.

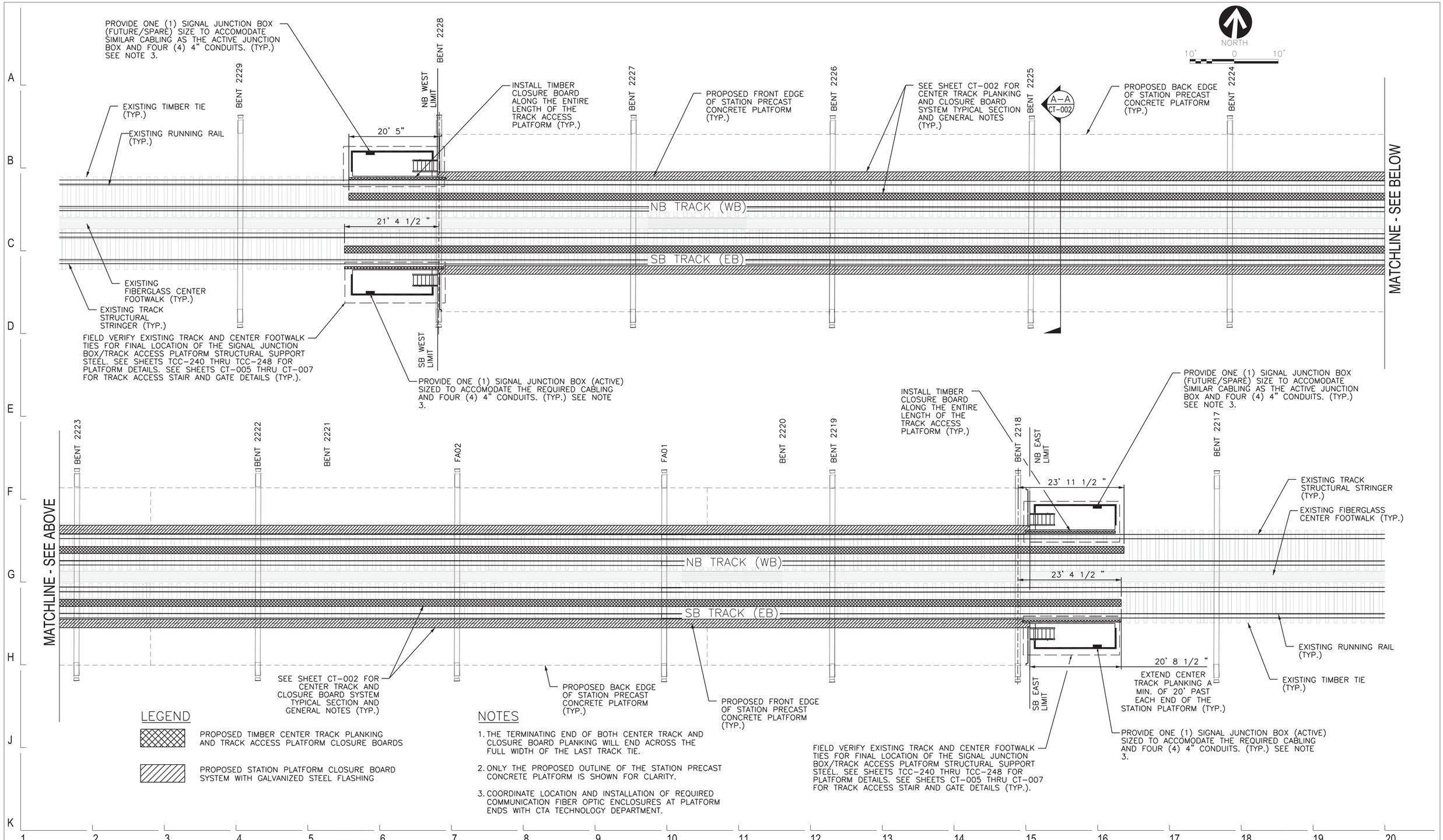

LEGEND

- PROPOSED TIMBER CENTER TRACK PLANKING AND TRACK ACCESS PLATFORM CLOSURE BOARDS
- PROPOSED STATION PLATFORM CLOSURE BOARD SYSTEM WITH GALVANIZED STEEL FLASHING

NOTES

1. THE TERMINATING END OF BOTH CENTER TRACK AND CLOSURE BOARD PLANKING WILL END ACROSS THE FULL WIDTH OF THE LAST TRACK TIE.
2. ONLY THE PROPOSED OUTLINE OF THE STATION PRECAST CONCRETE PLATFORM IS SHOWN FOR CLARITY.
3. COORDINATE LOCATION AND INSTALLATION OF REQUIRED COMMUNICATION FIBER OPTIC ENCLOSURES AT PLATFORM ENDS WITH CTA TECHNOLOGY DEPARTMENT.

DESIGN BY:									
DRAWN BY:									
CHECKED BY:									
APPROVED BY:			01/27/2020	ISSUE FOR BID	JDF	JDF	DBD		
CDOT/APPROVED BY:		NO.	DATE	REVISIONS	DES.	DRW.	CHK.	DCCO	CDOT

TYLIN INTERNATIONAL
200 S. Wacker Dr.
Suite 1400
Chicago, IL 60606
t: 312-777-2900
www.tylin.com

PERKINS+WILL
The Wrigley Building
410 North Michigan Ave.
Suite 1600
Chicago, IL 60611
t 312.755.0770
f 312.755.0775
www.perkinswill.com

CDOT
CHICAGO DEPARTMENT OF TRANSPORTATION
DIVISION OF ENGINEERING

154 N DAMEN AVE - DAMEN GREEN LINE STATION

TRACK ACCESS PLATFORM , CENTER PLANKING, AND CLOSURE BOARD PLAN LOCATIONS

CDOT PROJECT D-7-135 | DATE: 01/27/2020

SPEC. NO.

DRAWING NO. **CT-001**

REVISION NO.

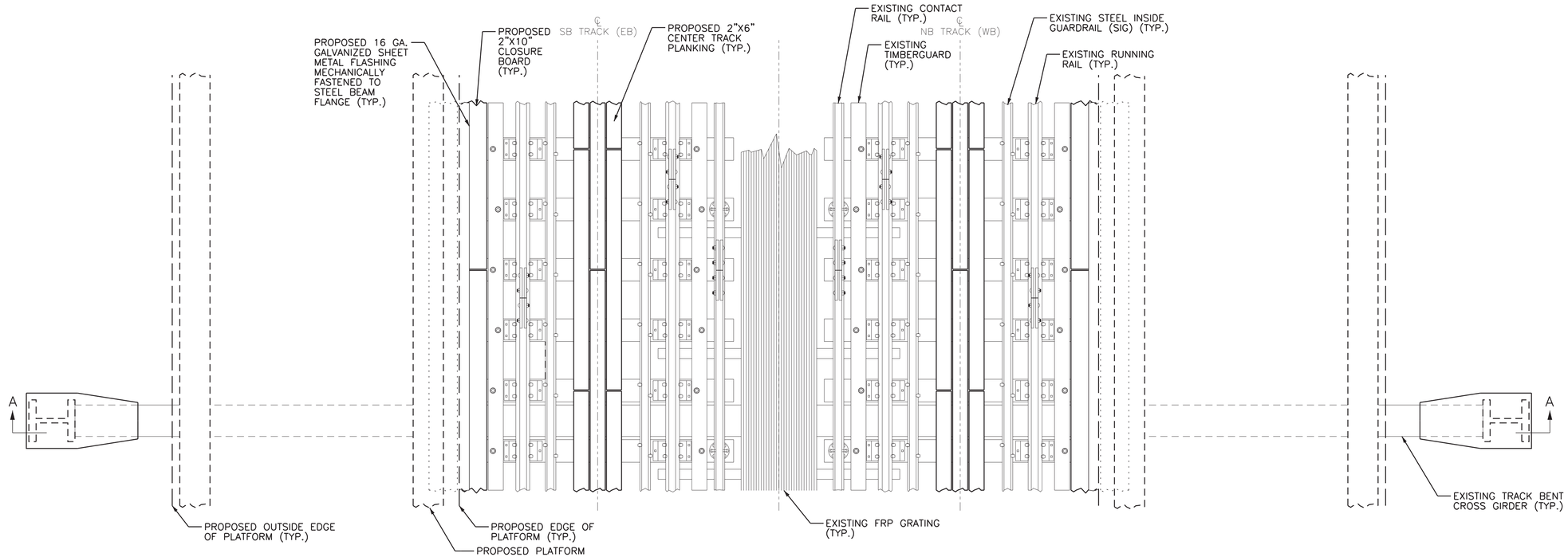

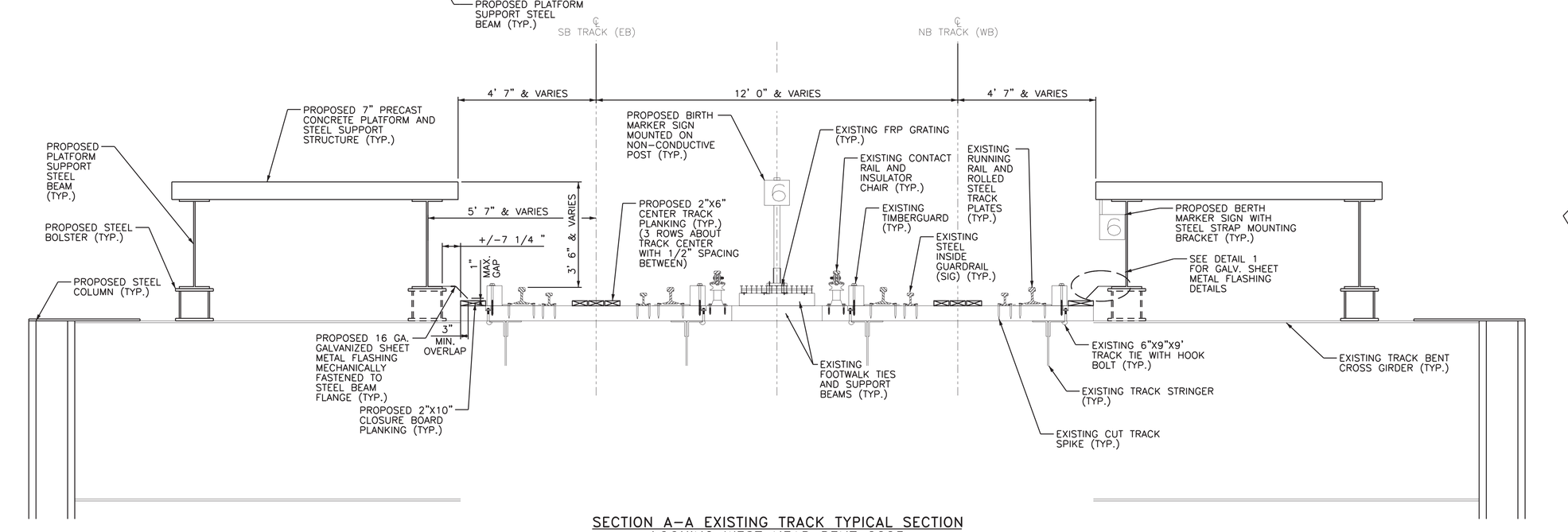

SECTION A–A EXISTING TRACK TYPICAL SECTION
LOOKING WEST NEAR BENT 2225

NOTES

1. THE CONTRACTOR WILL FURNISH AND INSTALL NOMINALLY SIZED CREOSOTE TREATED 2"X6" LUMBER FOR ALL OF THE CENTER TRACK PLANKING, 2"X10" CLOSURE BOARD PLANKING ADJACENT TO THE STATION PLATFORM, AND 2"X6" CLOSURE BOARD PLANKING ADJACENT TO THE TRACK ACCESS PLATFORMS.
2. THE CLOSURE BOARD SYSTEM ADJACENT TO AND FOR THE FULL LENGTH OF THE STATION PLATFORMS WILL CONSIST OF 2"X10" TIMBER BOARD AND 16GA. GALVANIZED STEEL FLASHING. THE GALVANIZED STEEL FLASHING WILL BE MECHANICALLY FASTENED TO THE STATION PLATFORM STRUCTURAL SYSTEM. IT IS THE CONTRACTORS RESPONSIBILITY TO FIELD VERIFY THAT THE CORRECT AND EXACT WIDTH OF GALVANIZED STEEL FLASHING IS PROVIDED. THE CLOSURE BOARD SYSTEM IS REQUIRED TO PROVIDE THE NECESSARY CLOSURE TO ELIMINATE THE SPACE BETWEEN THE TRACK AND THE STATION STRUCTURE IN ORDER TO PREVENT DEBRIS FROM FALLING TO THE STREET BELOW.
3. CENTER TRACK PLANKING AND TRACK ACCESS PLATFORM CLOSURE BOARDS WILL BE INSTALLED IN LENGTHS CONSISTENT WITH EXISTING TRACK TIE SPACING TO ALLOW FOR EACH INTERMEDIATE BOARD TO TERMINATE OVER THE CENTER OF A TRACK TIE. THE TERMINATING ENDS OF ALL PLANKING WILL TERMINATE ACROSS THE FULL WIDTH OF THE LAST TRACK TIE. CANTILEVERED PLANKING ENDS WILL BE PROHIBITED AT ALL TIMES.
4. ALL PLANKING AND CLOSURE BOARD TIMBERS WILL BE INSTALLED WITH AN APPROXIMATE 1/2" GAP BETWEEN THEM BOTH LATERALLY (SIDE TO SIDE) AND LONGITUDINALLY (END TO END).
5. ALL 2" x 6" PLANKING AND 2"X10" CLOSURE BOARD LUMBER WILL BE SECURED WITH SPIRAL SHANK, HOT DIPPED GALVANIZED, 20d NAILS. ALL TIMBER WILL BE INSTALLED BARK SIDE UP.
6. ALL PLANKING AND CLOSURE BOARD TIMBERS WILL BE SPACED TO CLEAR CTA EQUIPMENT BY NO LESS THAN 3" ALL AROUND. TYPICAL CTA EQUIPMENT ARE SWITCH MACHINES, IMPEDANCE BONDS IN THE STATION AREAS, ETC.

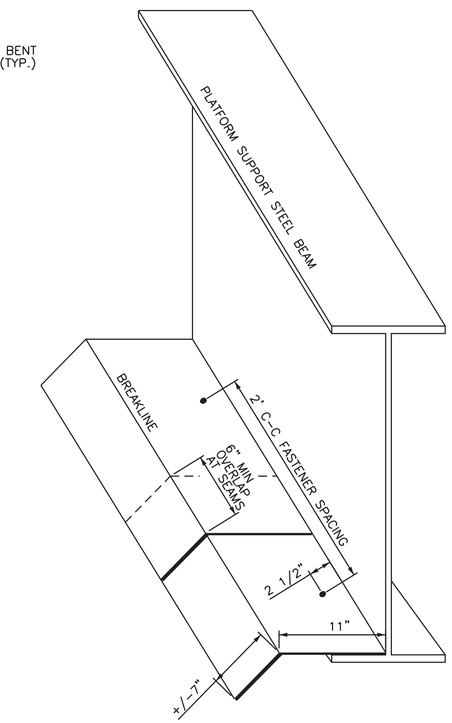

DETAIL 1: GALAVANIZED SHEET METAL FLASHING DETAILS

DESIGN BY:									
DRAWN BY:									
CHECKED BY:									
APPROVED BY:			01/27/2020	ISSUE FOR BID	JDF	JDF	DBD		
CDOT/APPROVED BY:		NO.	DATE	REVISIONS	DES.	DRW.	CHK.	DCCO	CDOT

TYLIN INTERNATIONAL
200 S. Wacker Dr.
Suite 1400
Chicago, IL 60606
t: 312-777-2900
www.tylin.com

PERKINS+WILL
The Wrigley Building
410 North Michigan Ave.
Suite 1600
Chicago, IL 60611
t 312.755.0770
f 312.755.0775
www.perkinswill.com

CDOT
CHICAGO DEPARTMENT OF TRANSPORTATION
DIVISION OF ENGINEERING

154 N DAMEN AVE - DAMEN GREEN LINE STATION

CENTER TRACK PLANKING AND STATION CLOSURE BOARD TYPICAL SECTION AND NOTES

CDOT PROJECT D-7-135 | DATE: 01/27/2020

SPEC. NO.

DRAWING NO. **CT-002**

REVISION NO.

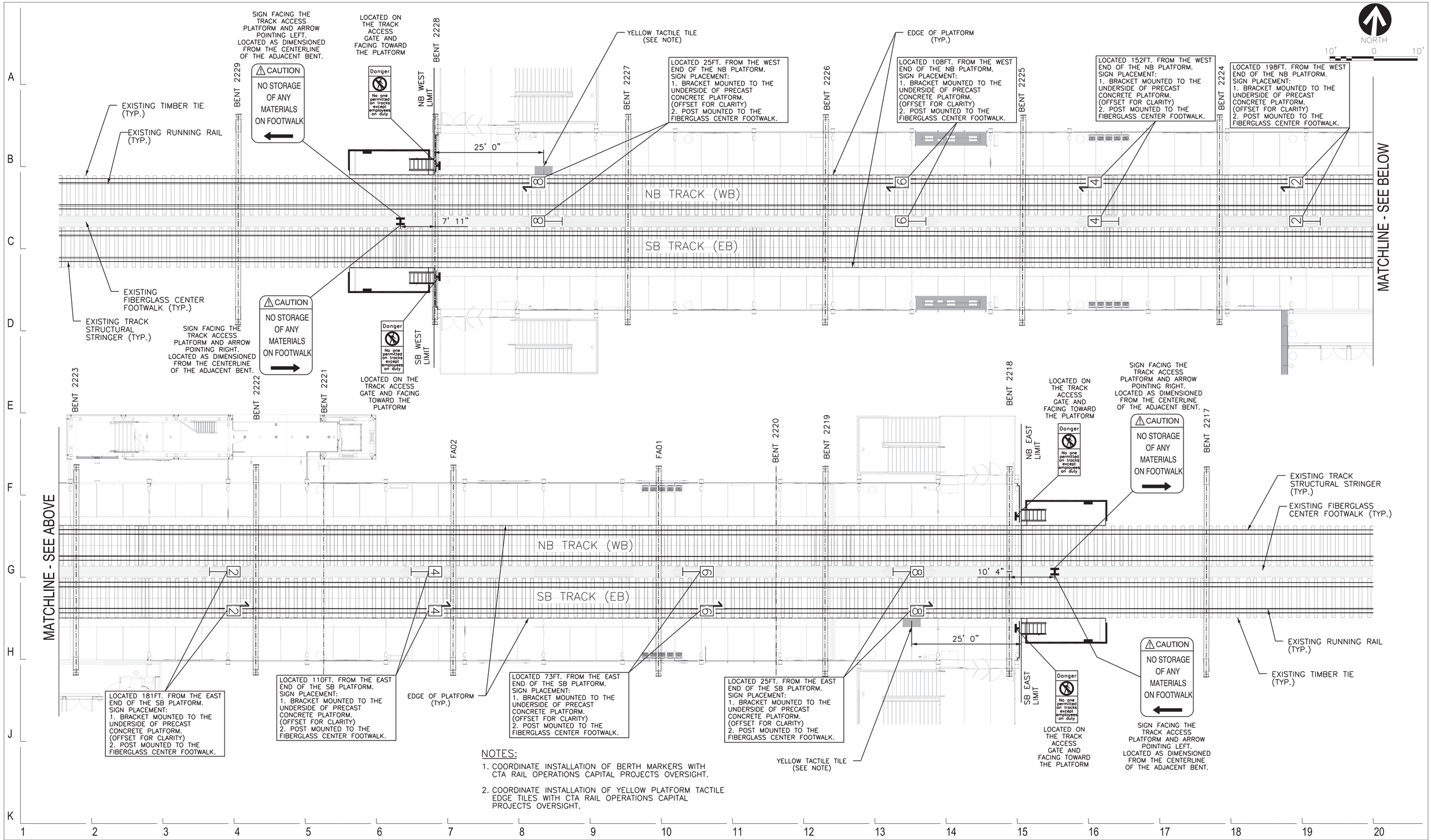

NOTES:

1. COORDINATE INSTALLATION OF BERTH MARKERS WITH CTA RAIL OPERATIONS CAPITAL PROJECTS OVERSIGHT.
2. COORDINATE INSTALLATION OF YELLOW PLATFORM TACTILE EDGE TILES WITH CTA RAIL OPERATIONS CAPITAL PROJECTS OVERSIGHT.

DESIGN BY:									
DRAWN BY:									
CHECKED BY:									
APPROVED BY:			01/27/2020	ISSUE FOR BID	JDF	JDF	DBD		
CDOT/APPROVED BY:		NO.	DATE	REVISIONS	DES.	DRW.	CHK.	DCCO	CDOT

TYLIN INTERNATIONAL
200 S. Wacker Dr.
Suite 1400
Chicago, IL 60606
t: 312-777-2900
www.tylin.com

PERKINS+WILL
The Wrigley Building
410 North Michigan Ave.
Suite 1600
Chicago, IL 60611
t 312.755.0770
f 312.755.0775
www.perkinswill.com

CDOT
CHICAGO DEPARTMENT OF TRANSPORTATION
DIVISION OF ENGINEERING

154 N DAMEN AVE - DAMEN GREEN LINE STATION

TRACK LEVEL SIGNAGE PLAN

CDOT PROJECT D-7-135 | DATE: 01/27/2020

SPEC. NO.

DRAWING NO. **CT-003**

REVISION NO.

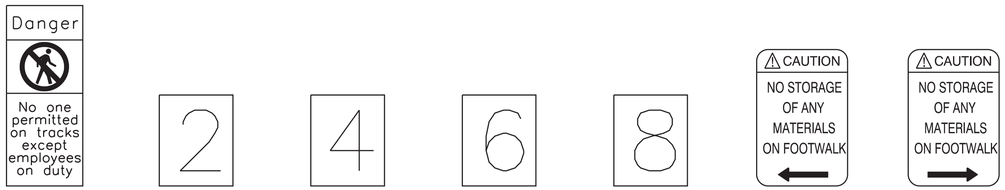

P-5
CTA DESIGN NO.: SDP-1211-R1
DRILLING PATTERN: "T"
MATERIAL: ALUMINUM
QTY: 4

M-2
CTA DESIGN NO.: OP-834
DRILLING PATTERN: "K"
MATERIAL: FIBERGLASS
QTY: 4

M-4
CTA DESIGN NO.: OP-835
DRILLING PATTERN: "K"
MATERIAL: FIBERGLASS
QTY: 4

M-6
CTA DESIGN NO.: OP-836
DRILLING PATTERN: "K"
MATERIAL: FIBERGLASS
QTY: 4

M-8
CTA DESIGN NO.: OP-837
DRILLING PATTERN: "K"
MATERIAL: FIBERGLASS
QTY: 4

X-X
CTA DESIGN NO.: OP-12231
DRILLING PATTERN: "B"
MATERIAL: ALUMINUM
QTY: 2

X-X
CTA DESIGN NO.: OP-12230
DRILLING PATTERN: "B"
MATERIAL: ALUMINUM
QTY: 2

SIGN DETAILS

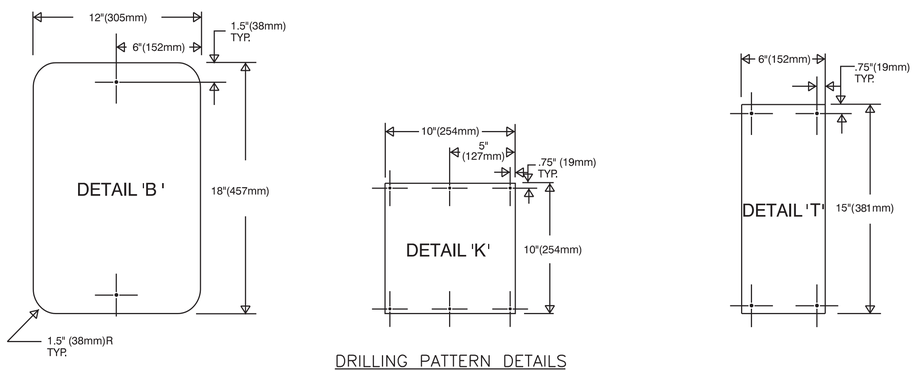

DRILLING PATTERN DETAILS

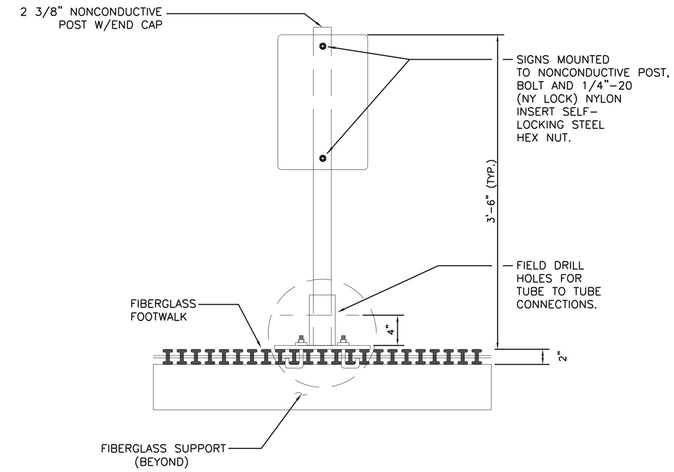

DETAIL OF CENTER FOOTWALK SIGNAGE
N.T.S

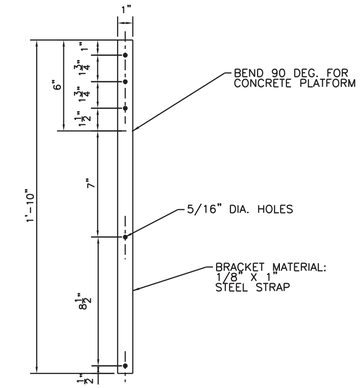

DETAIL FOR A SINGLE SIGN
BERTH MARKER BRACKET
N.T.S

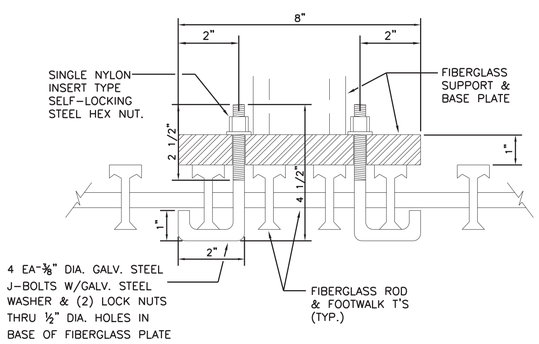

DETAIL OF CENTER FOOTWALK SIGNPOST ATTACHMENT
N.T.S

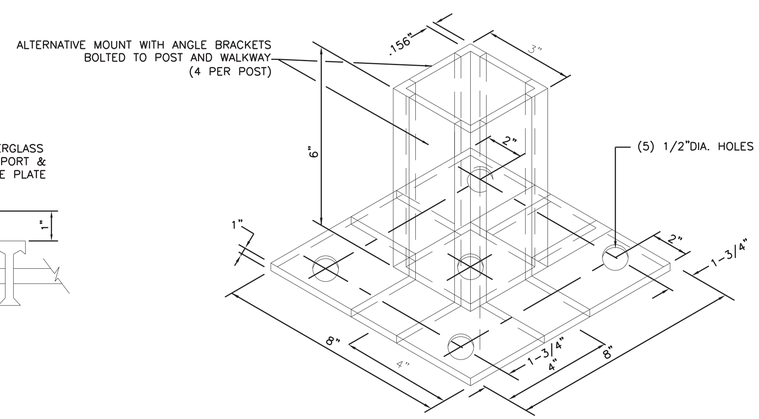

DETAIL OF CENTER FOOTWALK SIGNPOST SUPPORT
N.T.S

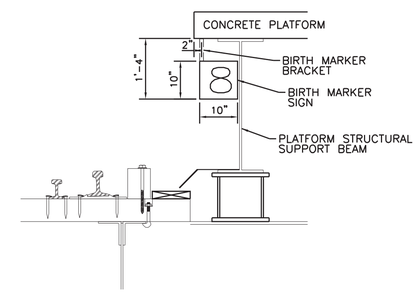

BERTH MARKER MOUNTING LOCATION
CROSS-SECTIONAL VIEW
N.T.S

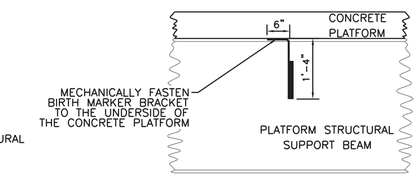

BERTH MARKER MOUNTING LOCATION
ELEVATION VIEW
N.T.S

DESIGN BY:									
DRAWN BY:									
CHECKED BY:									
APPROVED BY:			01/27/2020	ISSUE FOR BID	JDF	JDF	DBD		
CDOT/APPROVED BY:		NO.	DATE	REVISIONS	DES.	DRW.	CHK.	DCCO	CDOT

TYLIN INTERNATIONAL
200 S. Wacker Dr.
Suite 1400
Chicago, IL 60606
t: 312-777-2900
www.tylin.com

PERKINS+WILL
The Wrigley Building
410 North Michigan Ave.
Suite 1600
Chicago, IL 60611
t 312.755.0770
f 312.755.0775
www.perkinswill.com

CDOT
CHICAGO DEPARTMENT OF TRANSPORTATION
DIVISION OF ENGINEERING

154 N DAMEN AVE - DAMEN GREEN LINE STATION

TRACK LEVEL SIGNAGE DETAILS

CDOT PROJECT D-7-135

DATE: 01/27/2020

SPEC. NO.

DRAWING NO.
CT-004

REVISION NO.

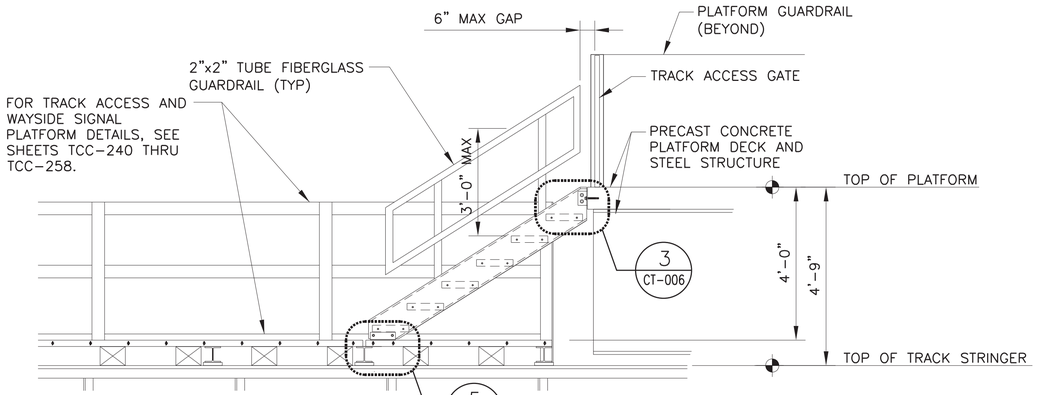

5 CT-005 ELEVATION

SCALE: 1/2" = 1'-0"

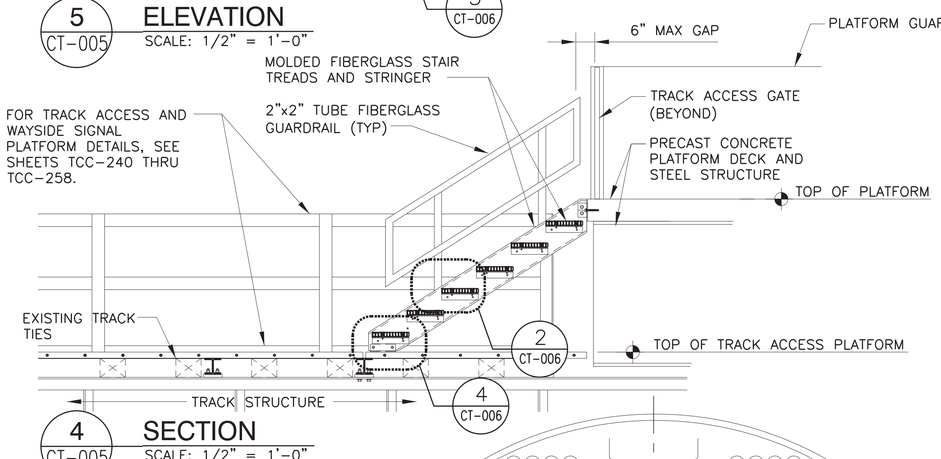

4 CT-005 SECTION

SCALE: 1/2" = 1'-0"

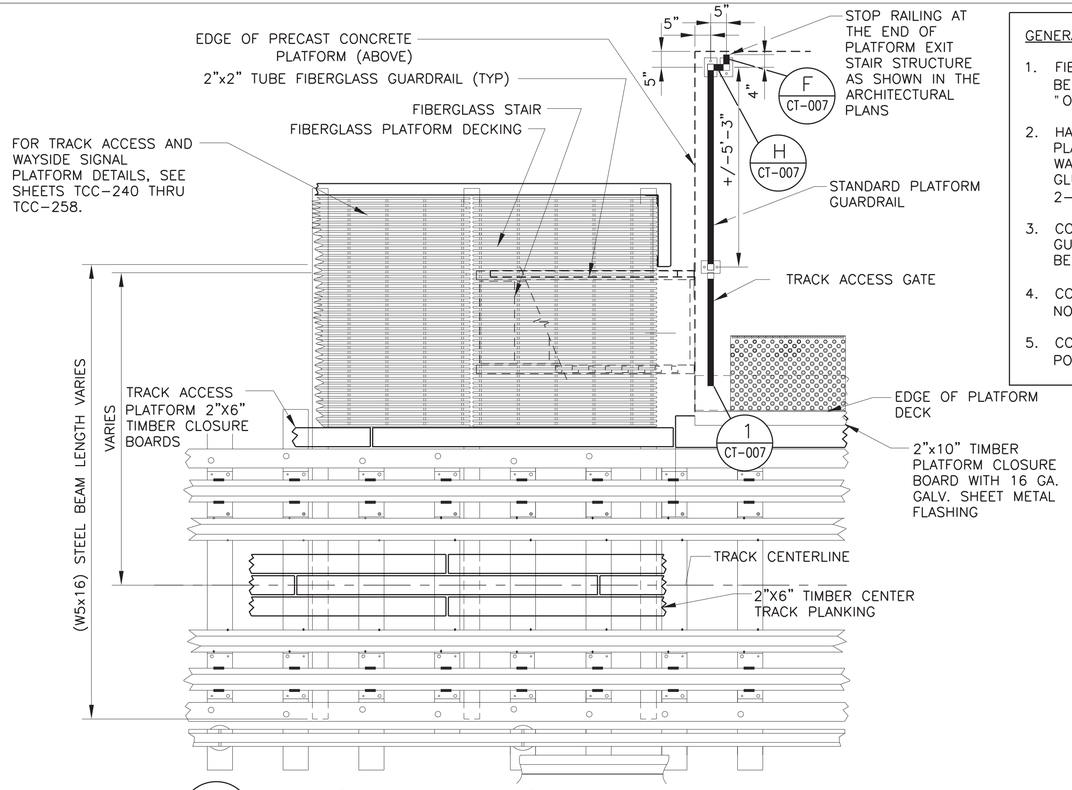

3 CT-005 TRACK LEVEL AND GUARDRAIL PLAN

SCALE: 1/2" = 1'-0"

GENERAL NOTES

1. FIBERGLASS DECK BEARING BARS TO BE 5/8" WIDE BY 2" TALL SPACED 1½" ON CENTER.
2. HAND RAIL POSTS AT FIGERGLASS PLATFORM DECK TO BE "DOUBLE WALL" WITH A 2X2 TUBE SECTION GLUED INSIDE OF THE LARGER 2-3/8"x2-3/8" TUBE SECTION.
3. COLOR OF FIBERGLASS STRINGERS, GUARDRAIL TUBES AND DECKING TO BE DARK GREY.
4. COLOR OF TREADS (EXCLUSIVE OF NOSING) TO BE 'SAFETY YELLOW'.
5. COLOR OF HANDRAIL TUBES AND POSTS TO BE 'SAFETY YELLOW'.

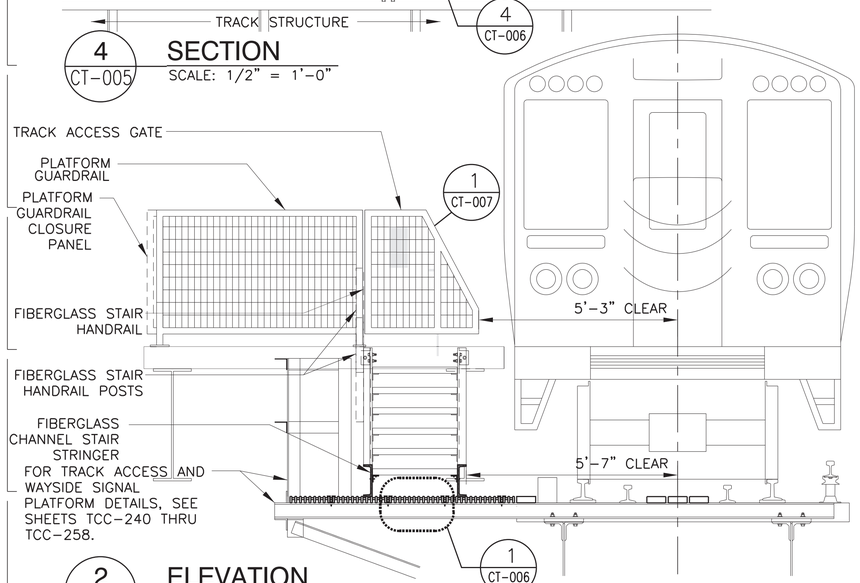

2 CT-005 ELEVATION

SCALE: 1/2" = 1'-0"

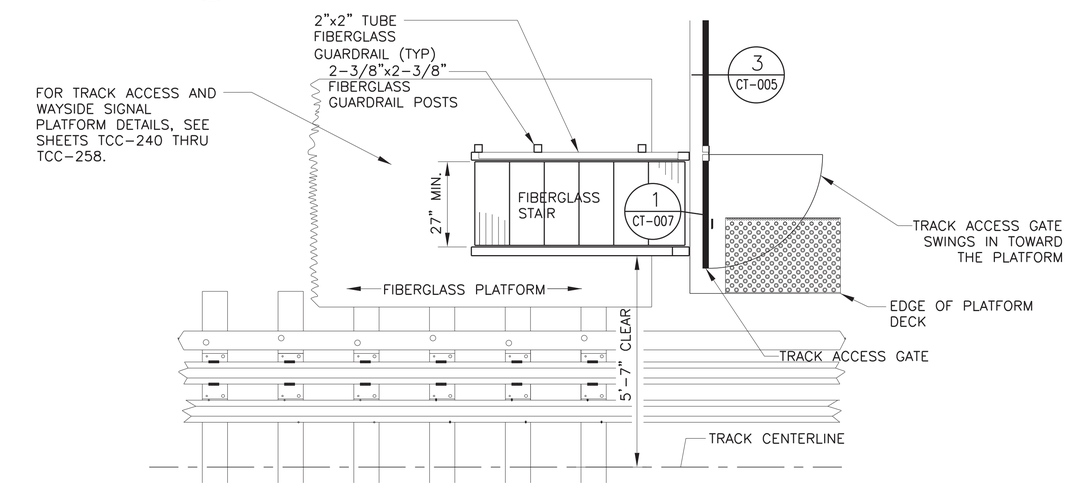

1 CT-005 PLATFORM LEVEL AND STAIR PLAN

0 1' 2' 4'
SCALE: 1/2"=1'-0"

DESIGN BY:									
DRAWN BY:									
CHECKED BY:									
APPROVED BY:			01/27/2020	ISSUE FOR BID	JDF	JDF	DBD		
CDOT/APPROVED BY:		NO.	DATE	REVISIONS	DES.	DRW.	CHK.	DCCO	CDOT

TYLIN INTERNATIONAL
200 S. Wacker Dr.
Suite 1400
Chicago, IL 60606
t: 312-777-2900
www.tylin.com

PERKINS+WILL
The Wrigley Building
410 North Michigan Ave.
Suite 1600
Chicago, IL 60611
t 312.755.0770
f 312.755.0775
www.perkinswill.com

CDOT
CHICAGO DEPARTMENT OF TRANSPORTATION
DIVISION OF ENGINEERING

154 N DAMEN AVE - DAMEN GREEN LINE STATION

TRACK ACCESS STAIR PLANS, ELEVATION AND SECTION DETAILS

CDOT PROJECT D-7-135 | DATE: 01/27/2020

SPEC. NO.

DRAWING NO. **CT-005**

REVISION NO.

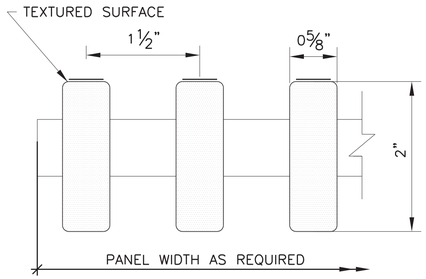

1 CT-006 FIBERGLASS TREAD
SCALE: 1:1

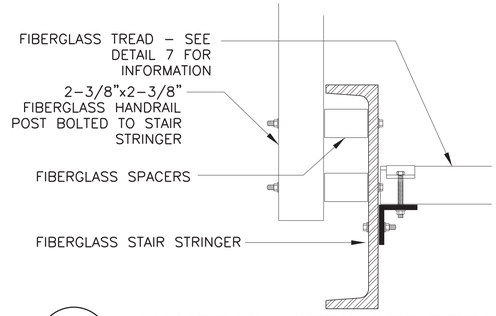

2 CT-006 HANDRAIL / STRINGER DETAIL
SCALE: 3" = 1'-0"

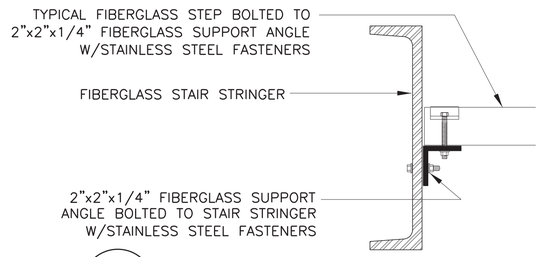

4 CT-006 TREAD / STRINGER DETAIL
SCALE: 3" = 1'-0"

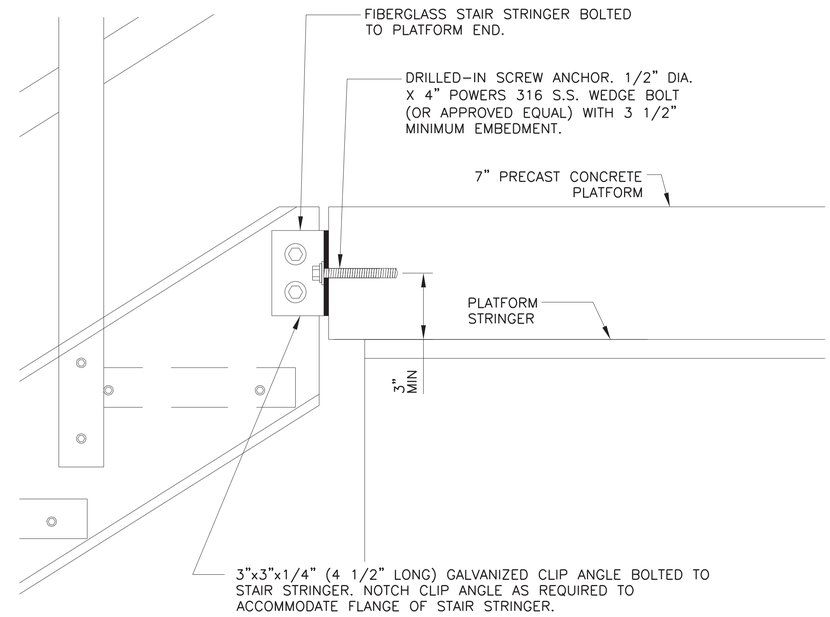

3 CT-006 CONNECTION DETAIL - PRECAST CONCRETE
SCALE: 3" = 1'-0"

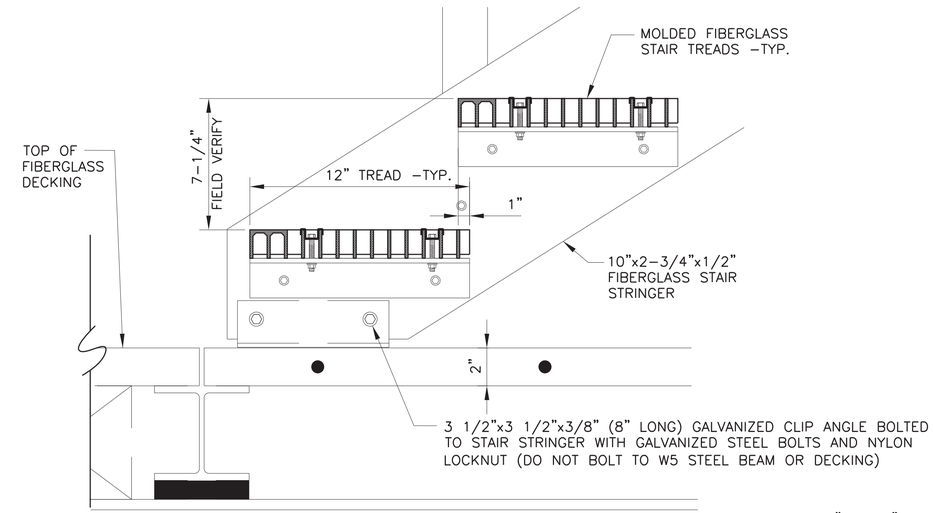

5 CT-006 STAIR AND DECK INTERFACE DETAIL
SCALE: 3" = 1'-0"

0 3" 6"
SCALE: 3"=1'-0"
0 1'
SCALE: 1-1/2"=1'-0"

GENERAL NOTES

1. FIBERGLASS DECK BEARING BARS TO BE 5/8" WIDE BY 2" TALL SPACED 1½" ON CENTER.

2. HAND RAIL POSTS AT FIGERGLASS PLATFORM DECK TO BE " DOUBLE WALL" WITH A 2X2 TUBE SECTION GLUED INSIDE OF THE LARGER 2-3/8"x2-3/8" TUBE SECTION.

3. COLOR OF FIBERGLASS STRINGERS, GUARDRAIL TUBES AND DECKING TO BE DARK GREY.

4. COLOR OF TREADS (EXCLUSIVE OF NOSING) TO BE 'SAFETY YELLOW'.

5. COLOR OF HANDRAIL TUBES AND POSTS TO BE 'SAFETY YELLOW'.

DESIGN BY:									
DRAWN BY:									
CHECKED BY:									
APPROVED BY:			01/27/2020	ISSUE FOR BID	JDF	JDF	DBD		
CDOT/APPROVED BY:		NO.	DATE	REVISIONS	DES.	DRW.	CHK.	DCCO	CDOT

TYLIN INTERNATIONAL
200 S. Wacker Dr.
Suite 1400
Chicago, IL 60606
t: 312-777-2900
www.tylin.com

PERKINS+WILL
The Wrigley Building
410 North Michigan Ave.
Suite 1600
Chicago, IL 60611
t 312.755.0770
f 312.755.0775
www.perkinswill.com

CDOT
CHICAGO DEPARTMENT OF TRANSPORTATION
DIVISION OF ENGINEERING

154 N DAMEN AVE - DAMEN GREEN LINE STATION

TRACK ACCESS STAIR DETAILS

CDOT PROJECT D-7-135 | DATE: 01/27/2020

SPEC. NO.

DRAWING NO. **CT-006**

REVISION NO.

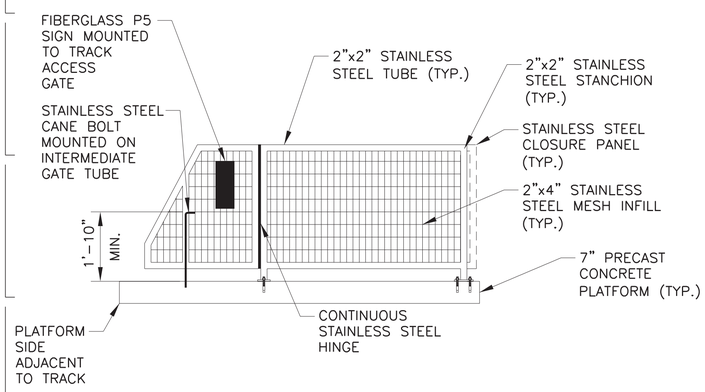

A CT-007 GATE AND GUARDRAIL ELEVATION

SCALE: 1/2" = 1'-0"
LOOKING FROM STATION PLATFORM

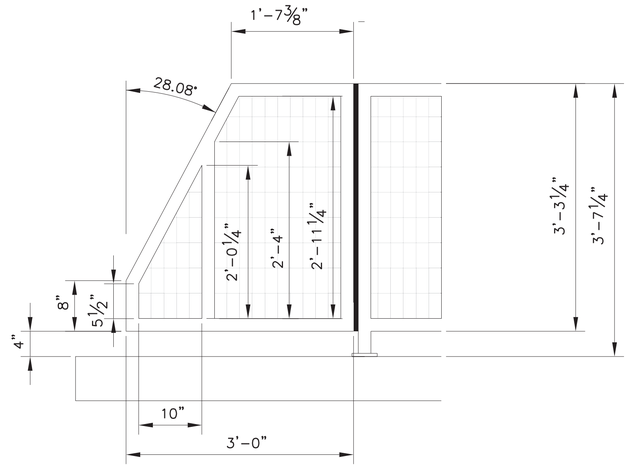

C CT-007 ENLARGED GATE ELEVATION

SCALE: 1" = 1'-0"
LOOKING FROM STATION PLATFORM

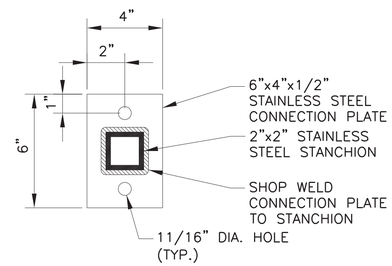

E CT-007 CONNECTION PLATE DETAILS

SCALE: 3" = 1'-0"
LOOKING FROM STATION PLATFORM

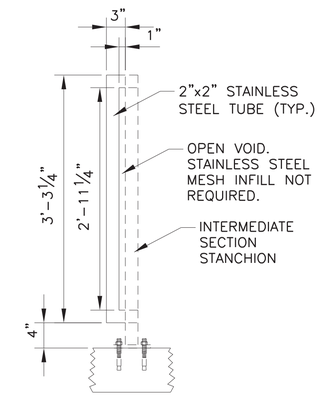

F CT-007 ENLARGED CLOSURE PANEL SECTION

SCALE: 1" = 1'-0"
LOOKING FROM END OF STATION PLATFORM
ALL HORIZONTAL DIMENSIONS SHALL BE FIELD VERIFIED PRIOR TO FABRICATION AND INSTALLATION.

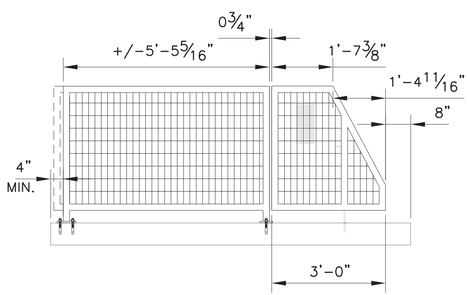

B CT-007 GATE AND GUARDRAIL ELEVATION

SCALE: 1/2" = 1'-0"
LOOKING FROM TRACK ACCESS PLATFORM

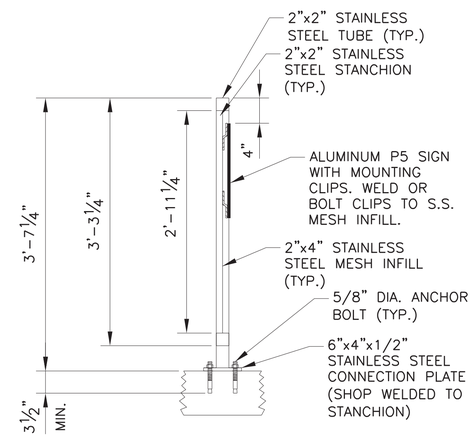

D CT-007 ENLARGED GATE SECTION

SCALE: 1" = 1'-0"

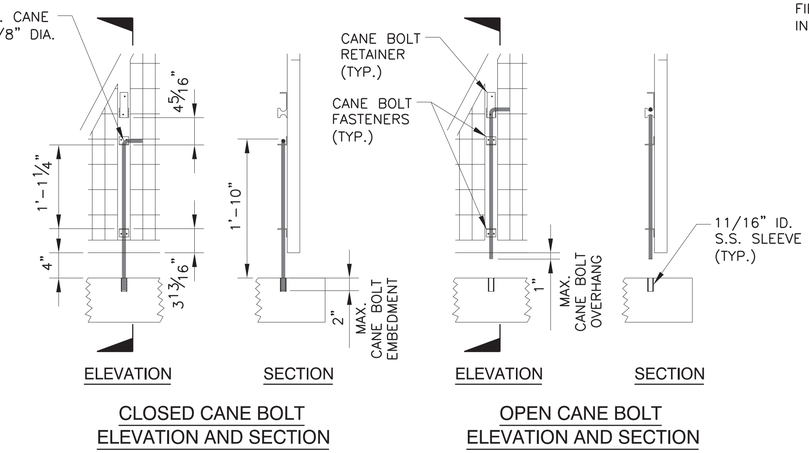

G CT-007 ENLARGED CANE BOLT ELEVATION AND SECTION

SCALE: 1" = 1'-0"
ELEVATION: LOOKING FROM STATION PLATFORM
SECTION: LOOKING TOWARD TRACK

NOTE: THE CANE BOLT ASSEMBLY SHALL HAVE A RETAINER OR SOME OTHER MECHANISM TO PREVENT THE CANE BOLT FROM BEING PERMANENTLY REMOVED.

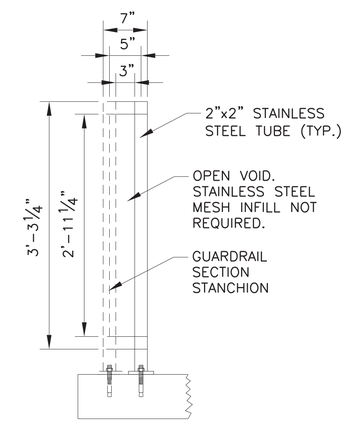

H CT-007 ENLARGED INTERMEDIATE SECTION

SCALE: 1" = 1'-0"
LOOKING TOWARD BACK OF STATION PLATFORM. ALL HORIZONTAL DIMENSIONS SHALL BE FIELD VERIFIED PRIOR TO FABRICATION AND INSTALLATION.

0 1' 2' 4'
SCALE: 1/2"=1'-0"
0 1' 2'
SCALE: 1"=1'-0"
0 3" 6" 1'
SCALE: 3"=1'-0"

NOTE:
GATE WILL SWING TOWARD THE PLATFORM AND AWAY FROM THE TRACK ACCESS STAIR.

1 CT-007 TRACK ACCESS GATE DETAILS

DESIGN BY:									
DRAWN BY:									
CHECKED BY:									
APPROVED BY:			01/27/2020	ISSUE FOR BID	JDF	JDF	DBD		
CDOT/APPROVED BY:		NO.	DATE	REVISIONS	DES.	DRW.	CHK.	DCCO	CDOT

TYLIN INTERNATIONAL
200 S. Wacker Dr.
Suite 1400
Chicago, IL 60606
t: 312-777-2900
www.tylin.com

PERKINS+WILL
The Wrigley Building
410 North Michigan Ave.
Suite 1600
Chicago, IL 60611
t 312.755.0770
f 312.755.0775
www.perkinswill.com

CDOT
CHICAGO DEPARTMENT OF TRANSPORTATION
DIVISION OF ENGINEERING

154 N DAMEN AVE - DAMEN GREEN LINE STATION

TRACK ACCESS STAIR GATE DETAILS

CDOT PROJECT D-7-135 | DATE: 01/27/2020

SPEC. NO.

DRAWING NO. **CT-007**

REVISION NO.

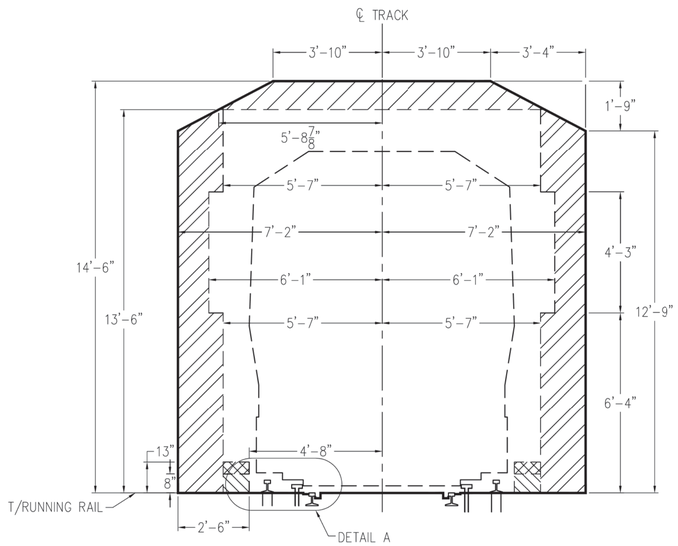

THIS AREA FOR INTERMITTENT OCCUPANCY BY SIGNALS, SIGNS, LIGHTS, AND COMMUNICATIONS EQUIPMENT

13'-6" CLEARANCE PERTMITTED FOR STATION CANOPIES, OR AS SPECIFIED BY THE ENGINEER

THIS AREA FOR INTERMITTENT OCCUPANCY OF SWITCH STANDS

THIS AREA FOR SIGNAL EQUIPMENT, POWER DISTRIBUTION, ETC.

1 CLEARANCE – NON-BOARDING AREA
SCALE: 1"=2' 0 1' 2' 4' 8'

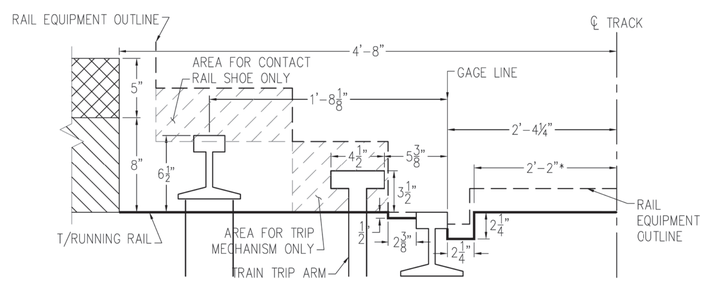

* NOTE: EXCEPTION TO 2'-2" DIMENSION IS AT INSTALLATIONS OF RESTRAINING GUARD RAIL WHERE WHEEL FLANGE IS INTENDED TO MAKE CONTACT. IN THIS CASE, DIMENSION SHALL BE 2'-2⅜" SO THAT FLANGEWAY DIMENSION IS EQUAL TO 1⅞".

2 DETAIL A
N.T.S.

CIVIL ENGINEERING TRACK STANDARDS 567 W. LAKE ST. CHICAGO, IL 60661	IN CHARGE GCZ				CTA STANDARD CLEARANCE DIAGRAM NON-BOARDING AREA
	APPROVED BY RAS				
	CHECKED BY JH				
	DESIGNED BY JJH				
	DRAWN BY JJH				CLR-1
	PROJECT NO.		07 APR 06		
	FILE NAME	MARK	DATE	DESCRIPTION	

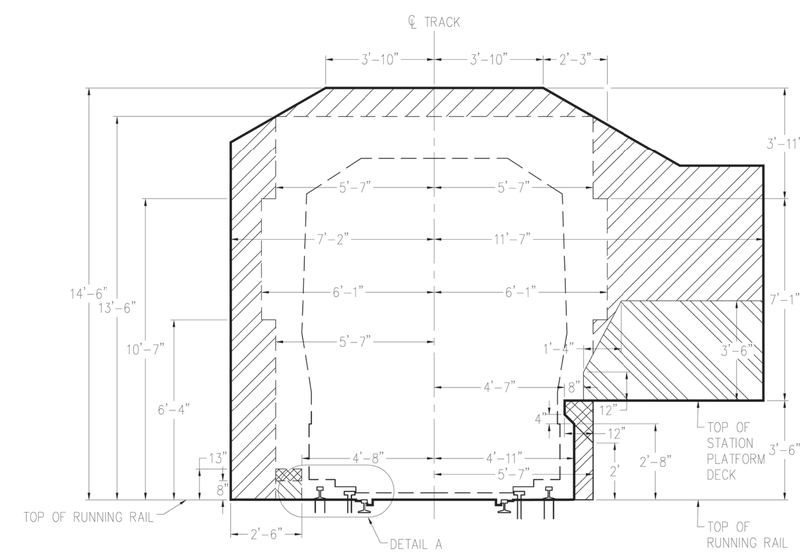

NOTES:

1. RIGHT SIDE OF DRAWING DETAILS PLATFORM SIDE OF STATION AREAS.
2. LEFT SIDE OF DRAWING DETAILS WALKWAY SIDE OF STATION AREAS.

THIS AREA FOR INTERMITTENT OCCUPANCY BY INSULATED SIGNALS, SIGNS, LIGHTS, AND COMMUNICATIONS EQUIPMENT

THIS AREA FOR INTERMITTENT OCCUPANCY BY INSULATED SIGNALS, SIGNS, LIGHTS, COMMUNICATIONS EQUIPMENT, AND NON-INSULATED STATION PLATFORM STRUCTURE SUPPORT (1)

13'-6" CLEARANCE PERTMITTED FOR STATION CANOPIES, OR AS SPECIFIED BY THE ENGINEER

THIS AREA FOR INTERMITTENT OCCUPANCY OF SWITCH STANDS

THIS AREA FOR SIGNAL EQUIPMENT, POWER DISTRIBUTION, ETC.

THIS AREA PLATFORM HANDRAILS ONLY

1 CLEARANCE – BOARDING AREA
SCALE: 1"=2' 0 1' 2' 4' 8'

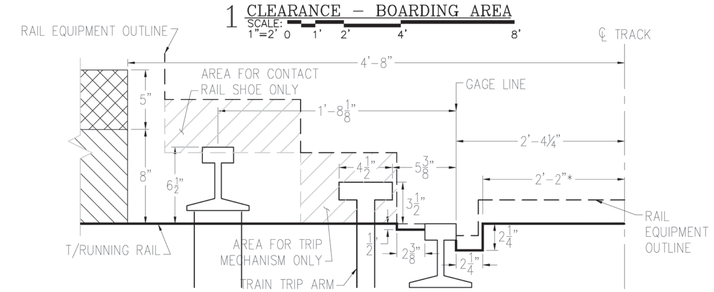

* NOTE: EXCEPTION TO 2'-2" DIMENSION IS AT INSTALLATIONS OF RESTRAINING GUARD RAIL WHERE WHEEL FLANGE IS INTENDED TO MAKE CONTACT. IN THIS CASE, DIMENSION SHALL BE 2'-2⅜" SO THAT FLANGEWAY DIMENSION IS EQUAL TO 1⅞".

2 DETAIL A
N.T.S.

CIVIL ENGINEERING TRACK STANDARDS 567 W. LAKE ST. CHICAGO, IL 60661	IN CHARGE JPH				CTA STANDARD CLEARANCE DIAGRAM BOARDING AREA
	APPROVED BY CTA				
	CHECKED BY CTA				
	DESIGNED BY CTA				
	DRAWN BY CTA		16 JUL 14	ADDED NOTE (1)	CLR-2
	PROJECT NO.		20 APR 06	ISSUED NEW DWG	
	FILE NAME	MARK	DATE	DESCRIPTION	

DESIGN BY:									
DRAWN BY:									
CHECKED BY:									
APPROVED BY:			01/27/2020	ISSUE FOR BID	JDF	JDF	DBD		
CDOT/APPROVED BY:		NO.	DATE	REVISIONS	DES.	DRW.	CHK.	DCCO	CDOT

TYLIN INTERNATIONAL
200 S. Wacker Dr.
Suite 1400
Chicago, IL 60606
t: 312-777-2900
www.tylin.com

PERKINS+WILL
The Wrigley Building
410 North Michigan Ave.
Suite 1600
Chicago, IL 60611
t 312.755.0770
f 312.755.0775
www.perkinswill.com

CDOT
CHICAGO DEPARTMENT OF TRANSPORTATION
DIVISION OF ENGINEERING

154 N DAMEN AVE - DAMEN GREEN LINE STATION

CTA STANDARD CLEARANCE DIAGRAMS
SHEET 1 OF 2

CDOT PROJECT D-7-135 | DATE: 01/27/2020

SPEC. NO.

DRAWING NO.
CT-008

REVISION NO.

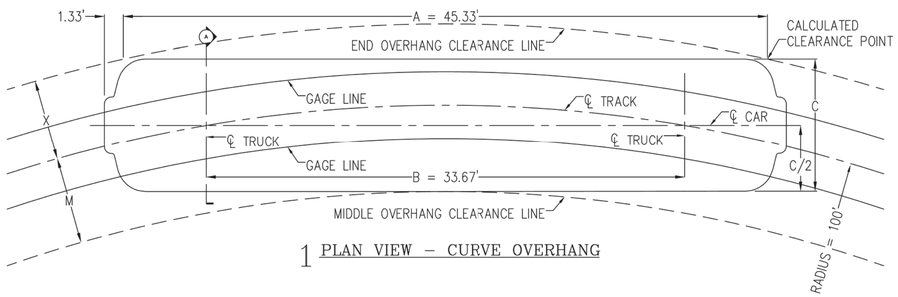

1 PLAN VIEW – CURVE OVERHANG

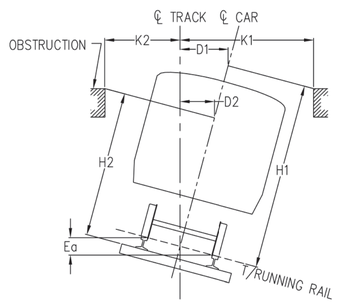

K1 = M + D1
K2 = X – D2

IF K2 < X, THEN K2 = X

K1 = REQUIRED MINIMUM DISTANCE FROM ℄ OF CURVED AND SUPERELEVATED TRACK TO OBSTRUCTION ON SIDE OF TRACK TOWARD CURVE CENTER.

K2 = REQUIRED MINIMUM DISTANCE FROM ℄ OF CURVED AND SUPERELEVATED TRACK TO OBSTRUCTION ON SIDE OF TRACK AWAY FROM CURVE CENTER.

D = H (Eq/56.5)
H = HEIGHT OF OBSTRUCTION FROM TOP OF RAILHEAD, PARALLEL TO VERTICAL CENTERLINE OF CAR WHERE D, H IN FEET; Eq IN INCHES

2 SUPERELEVATION EFFECT

MIDDLE OVERHANG:

$$M = R - \sqrt{R^2 - \frac{B^2}{4} + \frac{C^2}{2}}$$

END OVERHANG:

$$X = \sqrt{(R - M + C)^2 + \frac{B^2}{4}} - R$$

FOR PLATFORM CLEARANCE AT CAR FLOOR LINE, USE C = 8.667'

FOR WALL AND COLUMN CLEARANCES ABOVE CAR FLOOR LINE, USE C = 9.333'

3 OVERHANG FORMULAS

RADIUS (FT.)	M = MIDDLE OVERHANG (IN.)	X = END OVERHANG (IN.)
100	73.1	68.4
200	64.5	62.5
300	61.7	60.4
400	60.3	59.4
500	59.4	58.7
600	58.8	58.3
700	58.4	57.9
800	58.1	57.7
900	57.9	57.5
1000	57.7	57.4
1200	57.4	57.1
1400	57.2	57.0
1600	57.1	56.9
1800	56.9	56.8
2000	56.8	56.7
2500	56.7	56.5

* DO NOT INTERPOLATE BETWEEN RADII VALUES

4 TABLE OF END AND MIDDLE OVERHANG DISTANCES

FOR CLEARANCE REQUIREMENTS ON CURVES:

1. USE FORMULAS (DETAIL 3) OR TABLE (DETAIL 4, C = 9.333') TO FIND OVERHANG DISTANCES.
2. COMPENSATE FOR SUPERELEVATION, IF NECESSARY. SEE DETAIL 2.
3. DISTANCES FROM CALCULATIONS 1 AND 2 REPRESENT THE LIMITS OF THE CAR BODY AND DO NOT ACCOJNT FOR SWAY.
4. TO FIND EFFECTIVE 5'–7" OR 7'–2" CLEAR POINTS:

   M OR X + 11" = EFFECTIVE 5'–7" CLEAR POINT

   M OR X + 30" = EFFECTIVE 7'–2" CLEAR POINT

5 INSTRUCTIONS

NOT USED

CIVIL ENGINEERING
TRACK STANDARDS
567 W. LAKE ST.
CHICAGO, IL 60661

IN CHARGE			
APPROVED BY			
CHECKED BY			
DESIGNED BY MTG			
DRAWN BY MTG			
PROJECT NO.		30 JUN 06	REV. 1
FILE NAME	MARK	DATE	DESCRIPTION

CTA STANDARD CLEARANCE END AND MIDDLE OVERHANG SUPERELEVATION EFFECT

CLR–3

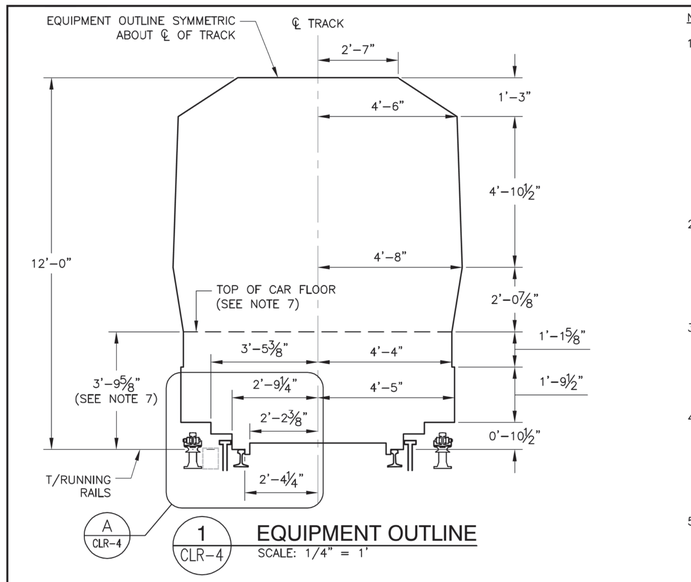

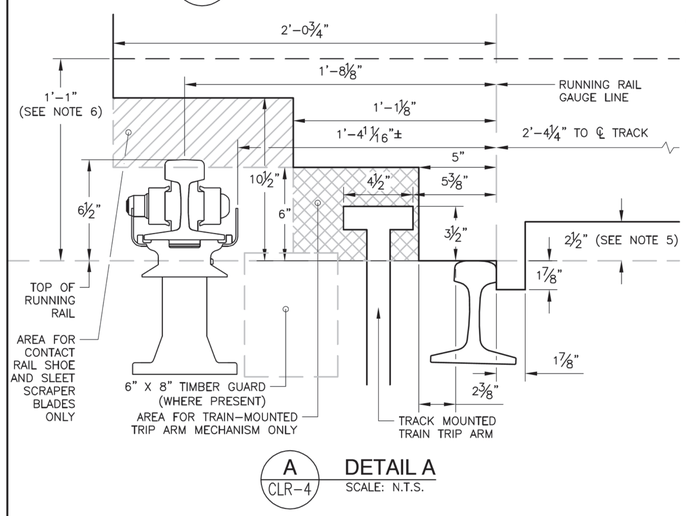

NOTES:

1. THE EQUIPMENT OUTLINE SHOWS THE MAXIMUM PERMISSIBLE OUTLINE FOR TRACK MOUNTED EQUIPMENT TRAVELING ALONG OR BEING USED ON LIVE OPERATING TRACK. THE DIMENSIONS PROVIDE ADEQUATE CLEARANCE FOR OBJECTS ALONG THE RIGHT–OF–WAY AND ENSURE ISOLATION FROM THE ELECTRIFIED CONTACT RAIL ON TANGENT, NON–SUPERELEVATED TRACK.
2. THE DIMENSIONS SHOWN MUST BE ADJUSTED TO COMPENSATE FOR THE END AND MIDDLE OVERHANG OF THE EQUIPMENT IN CURVED TRACK AND TO COMPENSATE FOR THE EFFECTS OF SUPERELEVATION.
3. DEVIATIONS MAY BE PERMITTED ON A LIMITED BASIS WITH THE APPROVAL OF THE CHIEF RAIL EQUIPMENT ENGINEER AND THE CHIEF INFRASTRUCTURE ENGINEER.
4. DIMENSIONS ABOVE TOP OF RAIL SHOWN ARE NOMINAL DESIGN HEIGHTS AND MAY VARY BASED ON CAR OPERATING CONDITIONS. IN NO CASE ARE THE DIMENSIONS TO BE OUTSIDE OF THE DIMENSIONS SHOWN.
5. MINIMUM EQUIPMENT CLEARANCE ABOVE TOP OF RAIL IS 2 ½" WITH FULLY WORN WHEELS AND FULL SPRING DEFLECTION.
6. MINIMUM HEIGHT OVER RUNNING RAIL FOR CAR BODY–MOUNTED EQUIPMENT THAT MAY BE OVER THE CONTACT RAIL ON CURVED OR TANGENT TRACK.
7. FOR 5000 SERIES CARS, TOP OF FLOOR HEIGHT IS AS FOLLOWS:
   7.1. BERTH MODE 42 ¼" (3'–6 ¼")
   7.2. RUNNING MODE 44 ⅛" (3'–8 ⅛")
   7.3. BACK–UP/FAULT MODE 45 ½" (3'–9 ½")

INFRASTRUCTURE
TRACK/CIVIL ENGINEERING
TRACK STANDARDS
567 W. LAKE ST.
CHICAGO, IL 60661–1465

cta ENGINEERING DEPARTMENT

CTA STANDARD CLEARANCE DIAGRAMS
EQUIPMENT OUTLINE

IN CHARGE	J. HARPER			
APPROVED BY	J. HARPER			
CHECKED BY	D. BOELDT			
DESIGNED BY	CTA/A. WHICKER/M. GIBBS			
DRAWN BY	A. WHICKER/M. GIBBS		13 JAN 2017	REVISED TO COORD. W/SKOKIE
PROJECT NO			07 APR 2006	
FILE NAME	CLR–4_STD–EQPM–OUTLINE	MARK	DATE	DESCRIPTION

CLR-4

PLOTTED ON: 2017/01/13, 16:25

N:\CIVIL\STANDARDS\CLEARANCES\CLEARANCE DRAWINGS\CLR–4_STD–EQPM–OUTLINES.DWG

DESIGN BY:									
DRAWN BY:									
CHECKED BY:									
APPROVED BY:			01/27/2020	ISSUE FOR BID	JDF	JDF	DBD		
CDOT/APPROVED BY:		NO.	DATE	REVISIONS	DES.	DRW.	CHK.	DCCO	CDOT

TY·LIN INTERNATIONAL
200 S. Wacker Dr.
Suite 1400
Chicago, IL 60606
t: 312-777-2900
www.tylin.com

PERKINS+WILL
The Wrigley Building
410 North Michigan Ave.
Suite 1600
Chicago, IL 60611
t 312.755.0770
f 312.755.0775
www.perkinswill.com

CDOT
CHICAGO DEPARTMENT OF TRANSPORTATION
DIVISION OF ENGINEERING

154 N DAMEN AVE - DAMEN GREEN LINE STATION

CTA STANDARD CLEARANCE DIAGRAMS
SHEET 2 OF 2

CDOT PROJECT D-7-135 | DATE: 01/27/2020

SPEC. NO.

DRAWING NO. CT-009

REVISION NO.

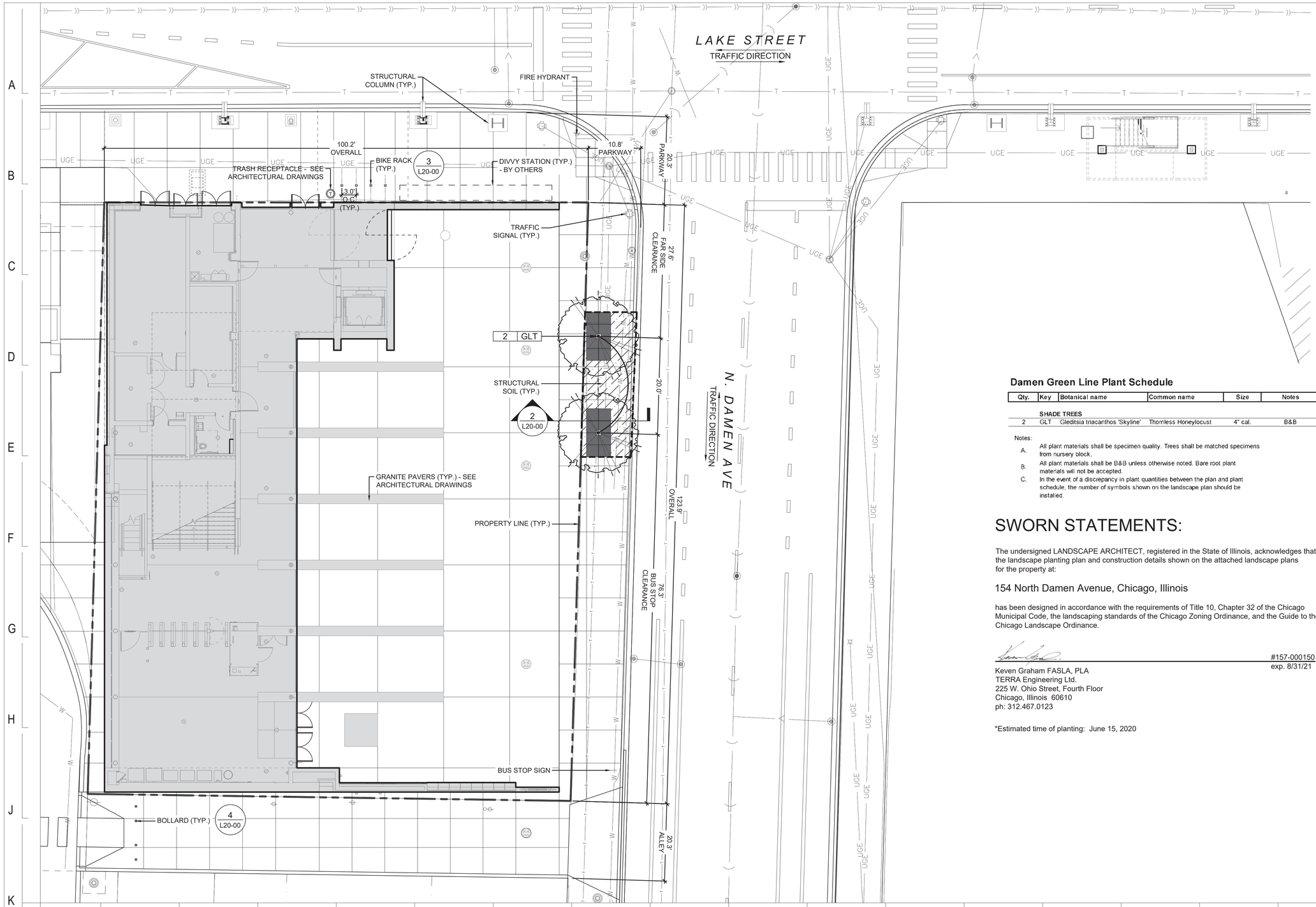

Damen Green Line Plant Schedule

Qty.	Key	Botanical name	Common name	Size	Notes
		SHADE TREES			
2	GLT	Gleditsia triacanthos 'Skyline'	Thornless Honeylocust	4" cal.	B&B

Notes:

A. All plant materials shall be specimen quality. Trees shall be matched specimens from nursery block.

B. All plant materials shall be B&B unless otherwise noted. Bare root plant materials will not be accepted.

C. In the event of a discrepancy in plant quantities between the plan and plant schedule, the number of symbols shown on the landscape plan should be installed.

SWORN STATEMENTS:

The undersigned LANDSCAPE ARCHITECT, registered in the State of Illinois, acknowledges that the landscape planting plan and construction details shown on the attached landscape plans for the property at:

154 North Damen Avenue, Chicago, Illinois

has been designed in accordance with the requirements of Title 10, Chapter 32 of the Chicago Municipal Code, the landscaping standards of the Chicago Zoning Ordinance, and the Guide to the Chicago Landscape Ordinance.

#157-000150
exp. 8/31/21

Keven Graham FASLA, PLA
TERRA Engineering Ltd.
225 W. Ohio Street, Fourth Floor
Chicago, Illinois 60610
ph: 312.467.0123

*Estimated time of planting: June 15, 2020

N

10' 0 5' 10' 20'
Scale: 1 inch = 10 ft.

LEGEND:

PROPERTY LINE

SHADE TREE

BIKE RACKS

TREE GRATE

STRUCTURAL SOIL

DESIGN BY:									
DRAWN BY:									
CHECKED BY:									
APPROVED BY:			01/27/2020	ISSUE FOR BID	WP	WP	KG		
CDOT/APPROVED BY:		NO.	DATE	REVISIONS	DES.	DRW.	CHK.	DCCO	CDOT

TERRA ENGINEERING LTD.
225 W Ohio Street - Suite 400; Chicago, IL 60654
(T) 312-467-0123 | (F) 312-467-0220

PERKINS+WILL
The Wrigley Building
410 North Michigan Ave.
Suite 1600
Chicago, IL 60611
t 312.755.0770
f 312.755.0775
www.perkinswill.com

CDOT
CHICAGO DEPARTMENT OF TRANSPORTATION
DIVISION OF ENGINEERING

154 N DAMEN AVE - DAMEN GREEN LINE STATION

LANDSCAPE PLAN

CDOT PROJECT D-7-135

DATE: 01/27/2020

SPEC. NO.

DRAWING NO. **L10-00**

REVISION NO.

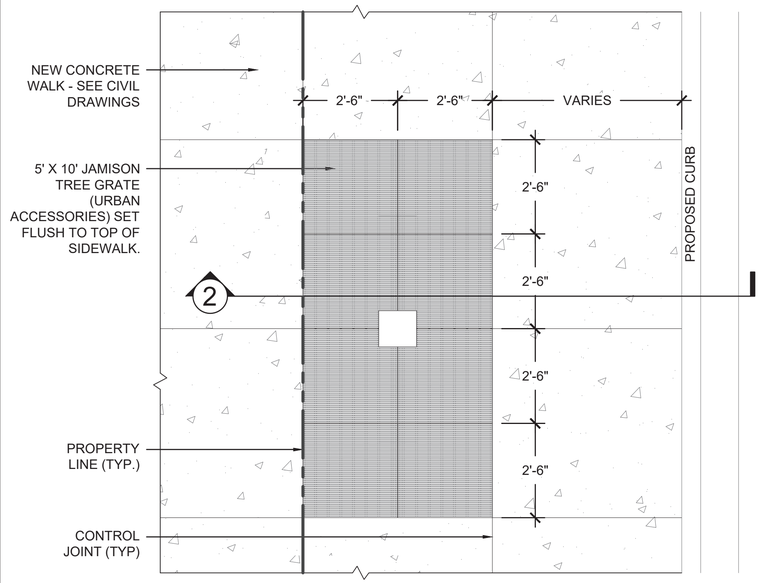

1 5' X 10' TREE GRATE
SCALE: NTS

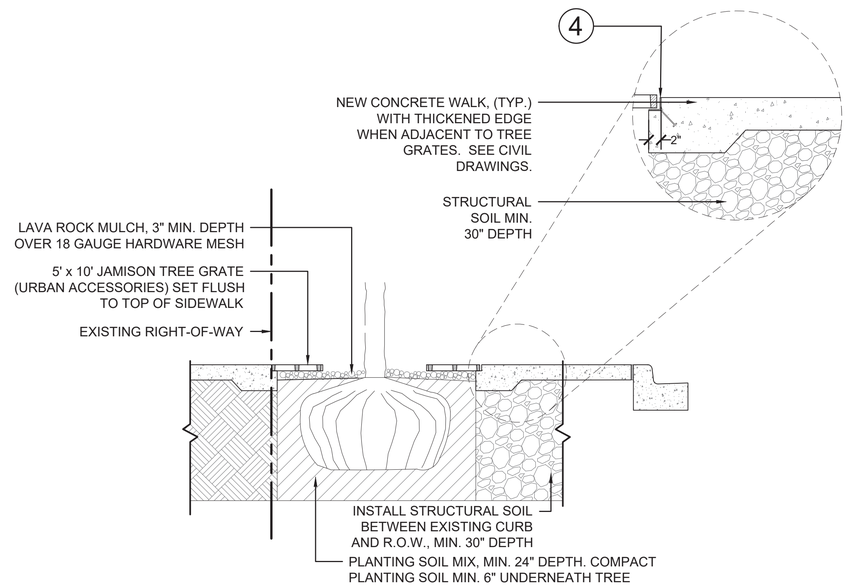

2 5' X 10' TREE GRATE SECTION
SCALE: NTS

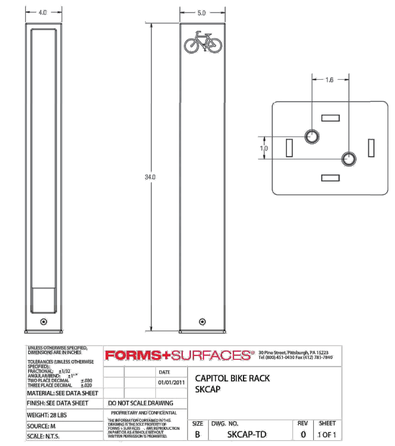

3 BIKE RACK DETAIL
SCALE: NTS

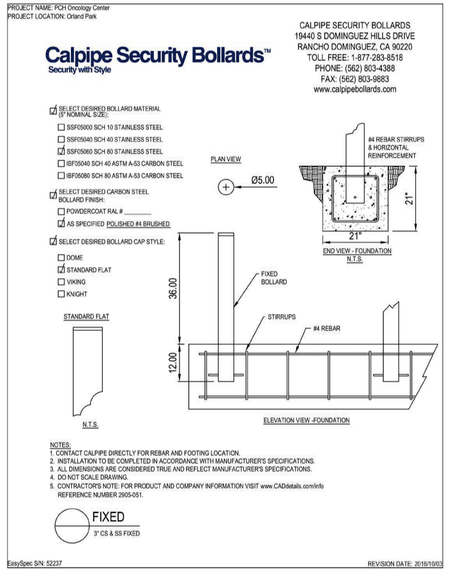

4 BOLLARD DETAIL
SCALE: NTS

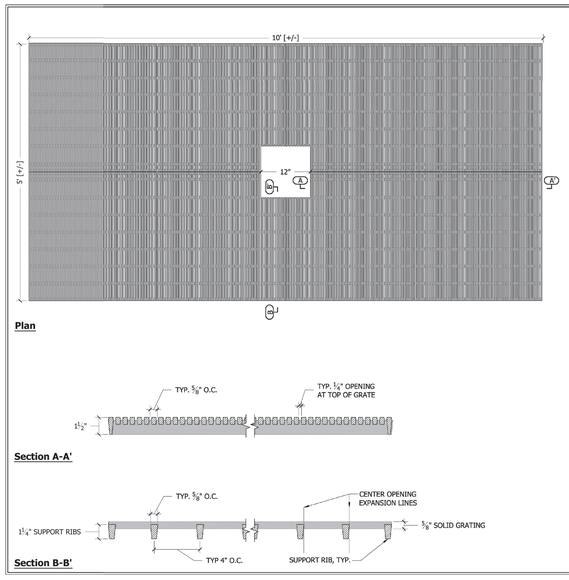

SPECIFICATIONS
- Material will be high quality 100% grey iron; ASTM A48 class 35b or better; hardness 170-223 brinnell (unless specified otherwise; see below).
  Material:
  - □ Grey iron ASTM A48 (standard)
  - □ Aluminum, ASTM 826
  - □ Ductile iron, (required for all load ratings higher than pedestrian) ASTM A536 class 65-45-12.
  - □ Nickel bronze (ASTM B30)
  - □ Bronze (ASTM B26)
- Finish will be natural patina of raw steel (unless specified otherwise; see below).
  Finish:
  - □ Raw (standard)
  - □ Polyester Powder Coat*
  - □ Liquid Coat (wet paint)*
    Color:
    *Please specify standard UC color or mfr. name and color code.
  - □ Brush (bronze/nickel/aluminum only)
  - □ Polish (bronze/nickel/aluminum only)
  - □ Galvanized (grey iron and ductile iron only)
  - □ Other:
- **Dimensions are nominal.**

Notes:
1) Cast in eight pieces.
2) Grate is 1- 1/2" thick at edge.
3) Center opening expansions at 1'-7" and 2'-3" square.
4) No openings greater than 3/16", in conformance with ADA Accessibility Guidelines.
5) Grate weighs 1088 lbs.

Comments:

Tree Grate
5' x 10' Jamison

Page 1 of 1 Date: 2/25/13

URBAN ACCESSORIES Founded 1972
465 E. FIFTEENTH ST. sales@urbanaccessories.com
TACOMA, WA 98421 www.urbanaccessories.com
(877) 487-0488

5 TREE GRATE DETAIL
SCALE: NTS

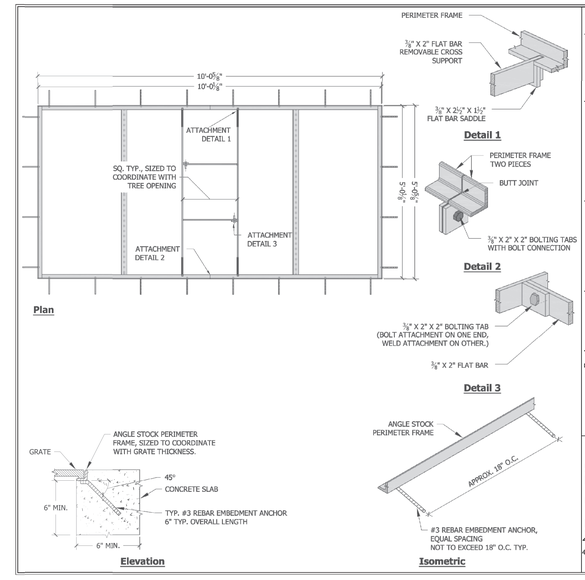

SPECIFICATIONS
- Frames are constructed of mild steel ASTM A36 (unless specified otherwise; see below).
  Material:
  - □ Mild Steel ASTM A36 (standard)
  - □ Stainless Steel grade 304.
  - □ Architectural Bronze, ASTM B455
  - □ Structural Aluminum, ASTM B221
- Finish will be natural patina of raw steel (unless specified otherwise; see below).
  Finish:
  - □ Raw (standard)
  - □ Polyester Powder Coat*
  - □ Liquid Coat (wet paint)*
    Color:
    *Please specify standard UA color or mfr. name and color code.
  - □ Galvanized
  - □ Other:
- Frame is load rated for pedestrian traffic only (unless specified otherwise; see below).
  Load Classifications:
  - □ Pedestrian (standard)
  - □ Light Vehicular
  - □ H20/HS20
    (Additional steel support may be added for optional load classes. Please contact UA for revised cut sheet, as necessary.)
- Typical 1/8" horizontal gap between grate and frame. All visible welds to be ground smooth on outside edges. Frames will be true to square or diameter. Top of grate flush with grade of surrounding topping material (paver, concrete slab, etc.).
- **Dimensions are nominal.**

Comments:

Tree Grate Frame
5' x 10' Type "S"
Pedestrian Duty

Page: 1 of 1 Date: 5/13/13

URBAN ACCESSORIES Founded 1972
465 E. FIFTEENTH ST. sales@urbanaccessories.com
TACOMA, WA 98421 www.urbanaccessories.com
(877) 487-0488

6 TREE GRATE FRAME DETAIL
SCALE: NTS

DESIGN BY:									
DRAWN BY:									
CHECKED BY:									
APPROVED BY:			01/27/2020	ISSUE FOR BID	WP	WP	KG		
CDOT/APPROVED BY:		NO.	DATE	REVISIONS	DES.	DRW.	CHK.	DCCO	CDOT

TERRA ENGINEERING LTD.
225 W Ohio Street - Suite 400; Chicago, IL 60654
(T) 312-467-0123 | (F) 312-467-0220

PERKINS+WILL
The Wrigley Building
410 North Michigan Ave.
Suite 1600
Chicago, IL 60611
t 312.755.0770
f 312.755.0775
www.perkinswill.com

CDOT
CHICAGO DEPARTMENT OF TRANSPORTATION
DIVISION OF ENGINEERING

154 N DAMEN AVE - DAMEN GREEN LINE STATION

LANDSCAPE DETAILS

CDOT PROJECT D-7-135 DATE: 01/27/2020

SPEC. NO.

DRAWING NO. **L20-00**

REVISION NO.

ALTA/NSPS Land Title Survey

OF

Part of Section 7, Township 39 North, Range 14 East of the Third Principal Meridian, in Cook County, Illinois.

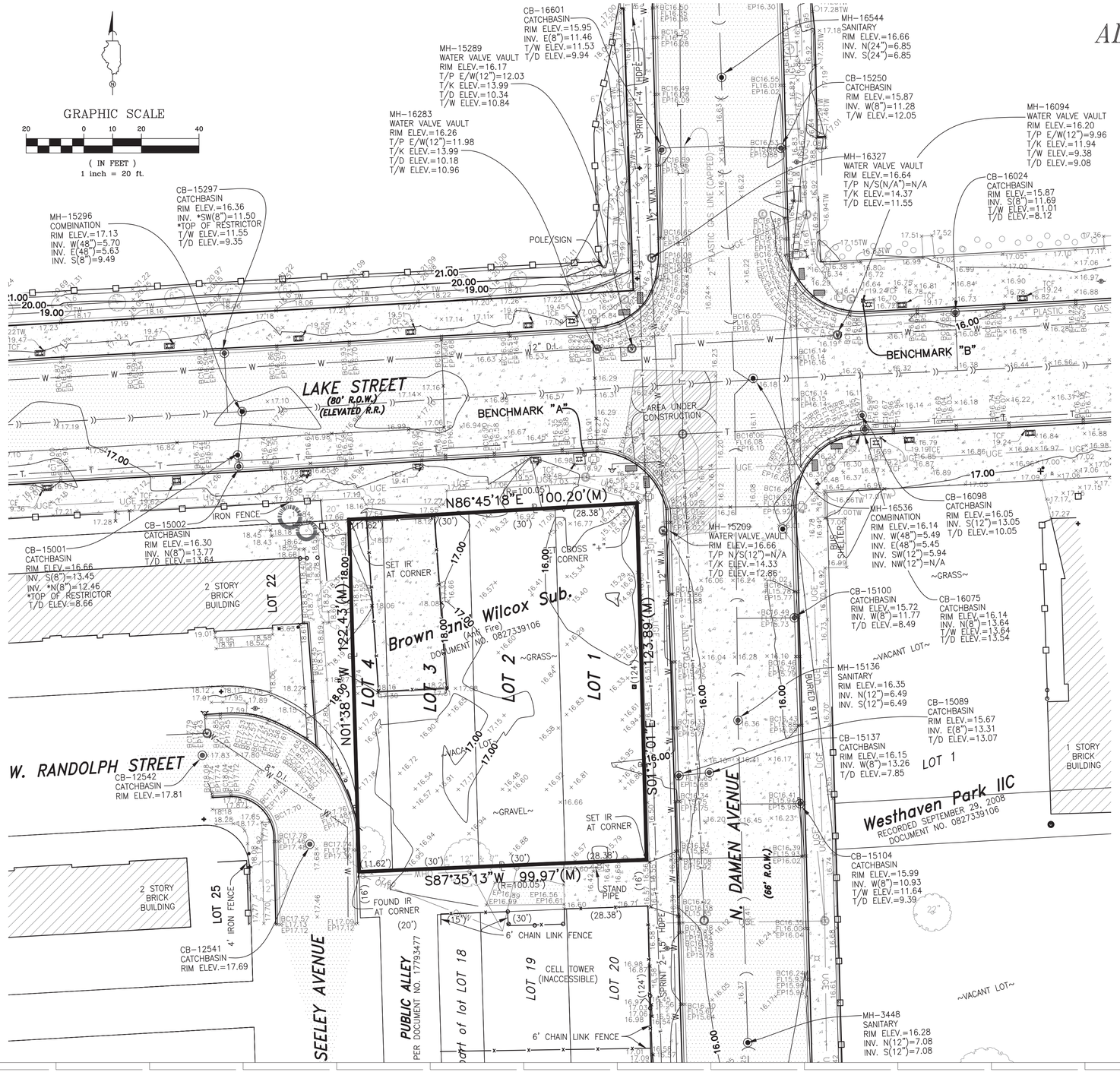

~ LEGAL DESCRIPTION ~

Lots 1, 2, 3 and the East 11 62/100 feet of Lot 4 in Brown and Wilcox Subdivision of Block 53 in Canal Trustees' Subdivision of Section 7, Township 39 North, Range 14 East of the Third Principal Meridian, in Cook County, Illinois.

Containing 12,323 Sq Ft. or 0.283 Acres more or less.

I FURTHER STATE that I have made no independent search of the records for easements, encumbrances, ownership, or any other facts which an accurate and current title search may disclose as a part of this survey, but have relied upon the information supplied to me by the owner's representative. I also state that a current Title Commitment was not furnished as a part of this survey.

I FURTHER STATE that the above described property is Zoned C1-2. The size, location and design of all buildings, structures, activity areas and other improvements must be expressly approved by the governing body with jurisdiction over the property.

To City of Chicago:

This is to certify that this map or plat and the survey on which it is based were made in accordance with the 2016 Minimum Standard Detail Requirements for ALTA/NSPS Land Title Surveys, jointly established and adopted by ALTA and NSPS, and includes Items 1, 4, 5, 6(a), 7(a), 8 and 11 of Table A thereof. The field work was completed on January 15, 2019.

Date: January 16, 2019

THOMAS E. BAUMGARTNER, ILLINOIS LAND SURVEYOR NO. 3142
LICENSE EXPIRATION 11-30-2020

PROFESSIONAL LAND SURVEYOR
THOMAS E. BAUMGARTNER
35-3142
CHICAGO
STATE OF ILLINOIS

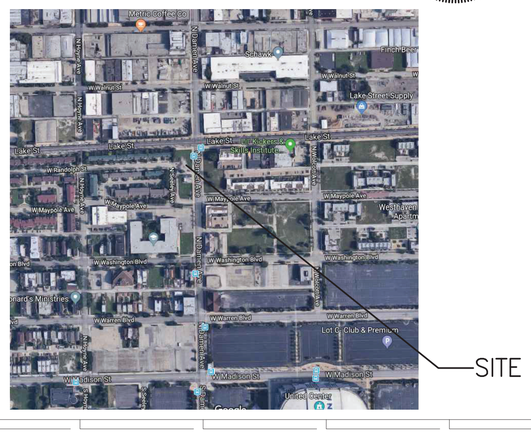

LEGEND AND ABBREVIATIONS:

- BUILDING
- CONCRETE
- ASPHALT
- DEPRESSED CURB
- CHAIN LINK FENCE
- IRON FENCE
- WOOD FENCE
- GUARDRAIL
- FOUND PK NAIL
- FOUND REBAR
- SET IRON ROD/PIPE
- SET MAG NAIL
- SET/FOUND CUT CROSS
- COMBINATION SEWER
- SANITARY SEWER
- STORM SEWER
- W — WATER LINE
- G — GAS LINE
- COM — COMMUNICATION LINE
- SBC — SBC COMMUNICATION LINE
- T — TELEPHONE LINE
- OHW — OVERHEAD WIRE LINE
- UGE — UNDERGROUND ELECTRIC LINE
- x BC17.09 — BACK OF CURB ELEVATION
- x FL17.68 — FLOW LINE ELEVATION
- x EP17.23 — EDGE OF PAVEMENT ELEVATION
- x FF17.38 — FINISH FLOOR ELEVATION
- MANHOLE
- WATER MANHOLE
- ELECTRIC MANHOLE
- TELEPHONE MANHOLE
- CURB INLET
- CATCH BASIN
- AREA DRAIN
- UTILITY POLE
- POWER POLE W/LIGHT
- POWER POLE W/TRANSFORMER
- LIGHT POLE
- FIRE HYDRANT
- GAS VALVE
- GAS METER
- ELECTRIC METER
- BUFFALO BOX
- WATER VALVE
- TREE-DECIDUOUS
- TREE-EVERGREEN
- BUSH
- POST
- SIGN
- BOLLARD
- SPRINKLER
- CLEANOUT

DESIGN BY:									
DRAWN BY:									
CHECKED BY:									
APPROVED BY:			01/27/2020	ISSUE FOR BID		TB	TB		
CDOT/APPROVED BY:		NO.	DATE	REVISIONS	DES.	DRW.	CHK.	DCCO	CDOT

TERRA ENGINEERING LTD.
225 W Ohio Street - Suite 400; Chicago, IL 60654
(T) 312-467-0123 | (F) 312-467-0220

This survey was prepared by TERRA Engineering, Ltd. It is included in the documents for information only. The contractor shall verify all information shown. Perkins and Will is not responsible for the accuracy or completeness of this information.

CDOT
CHICAGO DEPARTMENT OF TRANSPORTATION
DIVISION OF ENGINEERING

154 N DAMEN AVE - DAMEN GREEN LINE STATION

SPEC. NO.

ALTA SURVEY

DRAWING NO.
SV00-01

CDOT PROJECT D-7-135

DATE: 01/27/2020

REVISION NO.

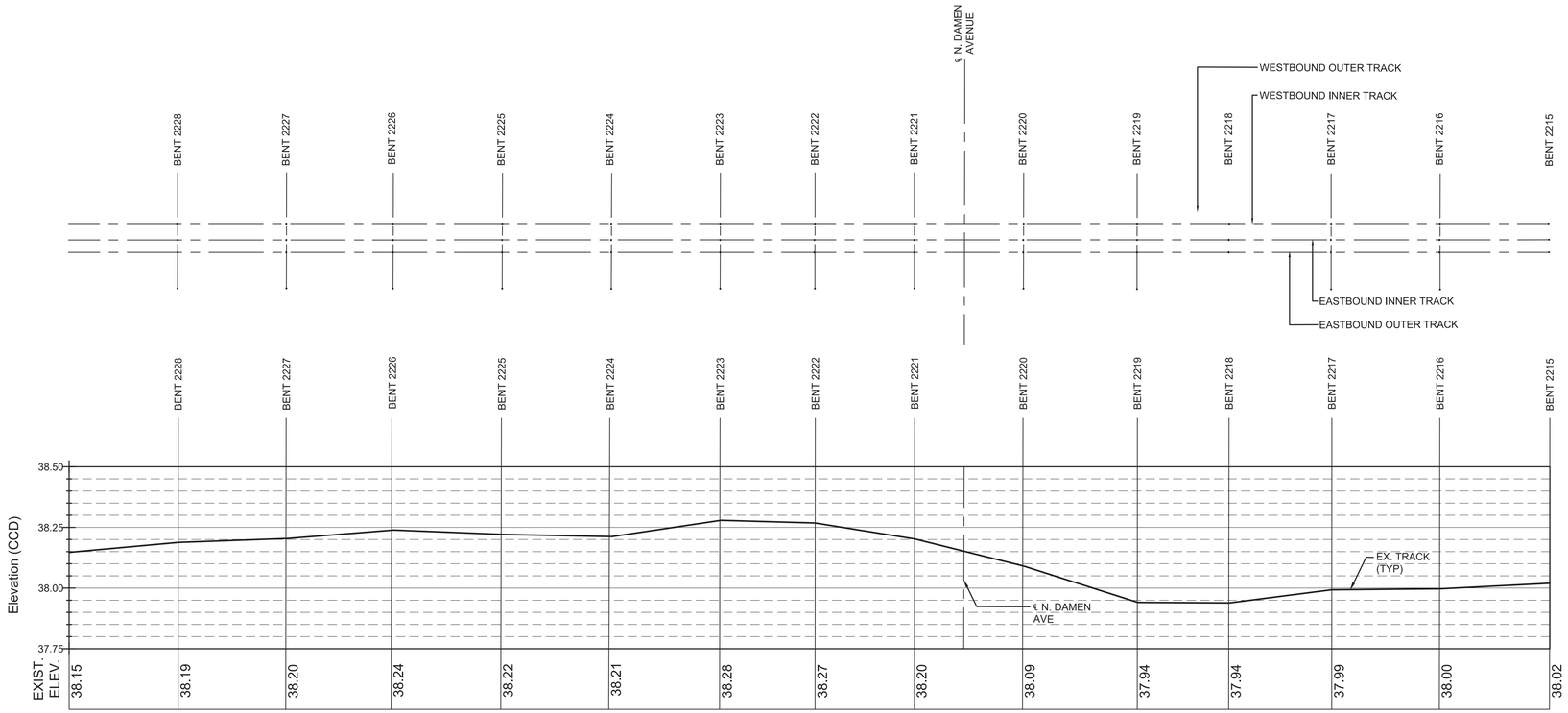

EASTBOUND TRACK ALIGNMENT: INNER TRACK
Scale: 1" = 30'
Vert. Exaggeration = 100

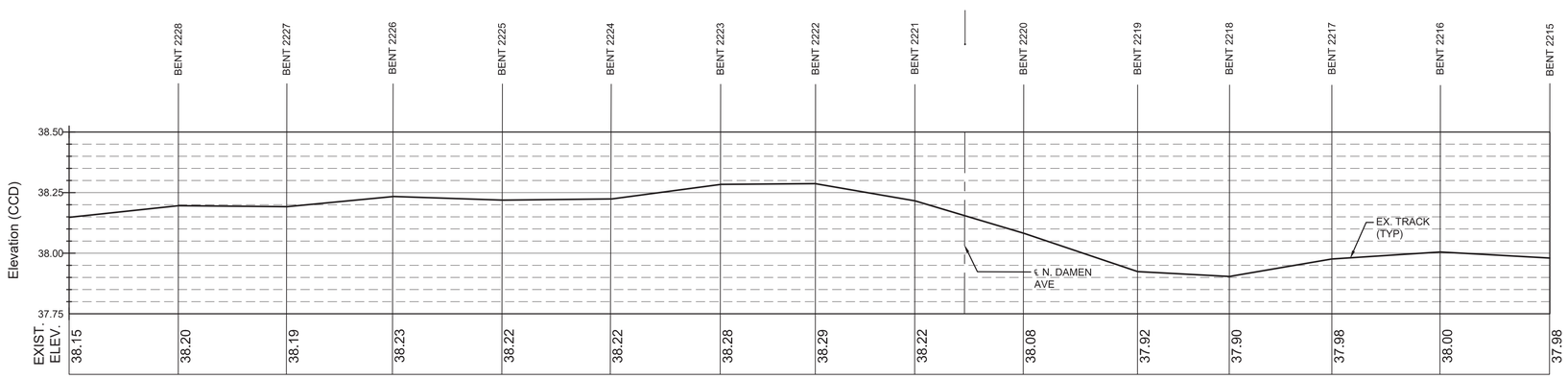

EASTBOUND TRACK ALIGNMENT: OUTER TRACK
Scale: 1" = 30'
Vert. Exaggeration = 100

GENERAL NOTE:

1. CONTRACTOR SHALL SURVEY THE EXISTING RAIL AND TRACK STRUCTURE, AFTER TRACK COLUMN REPLACEMENT, TO VERIFY DIMENSIONS AND ELEVATIONS PROVIDED.

DESIGN BY:									
DRAWN BY:									
CHECKED BY:									
APPROVED BY:			01/27/2020	ISSUE FOR BID		WP	TB		
CDOT/APPROVED BY:		NO.	DATE	REVISIONS	DES.	DRW.	CHK.	DCCO	CDOT

TERRA ENGINEERING LTD.
225 W Ohio Street - Suite 400; Chicago, IL 60654
(T) 312-467-0123 | (F) 312-467-0220

This survey was prepared by TERRA Engineering, Ltd. It is included in the documents for information only. The contractor shall verify all information shown. Perkins and Will is not responsible for the accuracy or completeness of this information.

CDOT
CHICAGO DEPARTMENT OF TRANSPORTATION
DIVISION OF ENGINEERING

154 N DAMEN AVE - DAMEN GREEN LINE STATION

TRACK PROFILE - EASTBOUND

CDOT PROJECT D-7-135

DATE: 01/27/2020

SPEC. NO.

DRAWING NO.
TP00-01

REVISION NO.

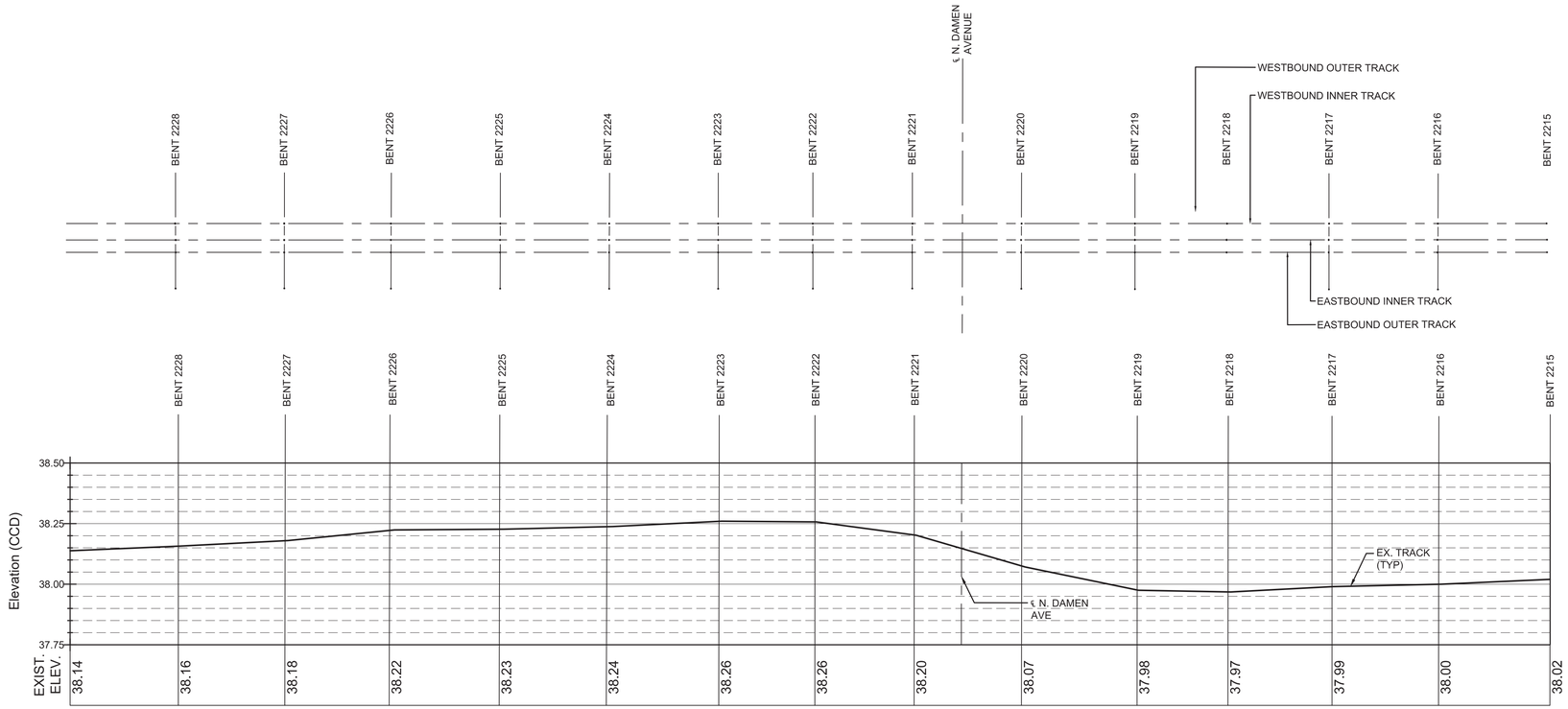

WESTBOUND TRACK ALIGNMENT: OUTER TRACK
Scale: 1" = 30'
Vert. Exaggeration = 100

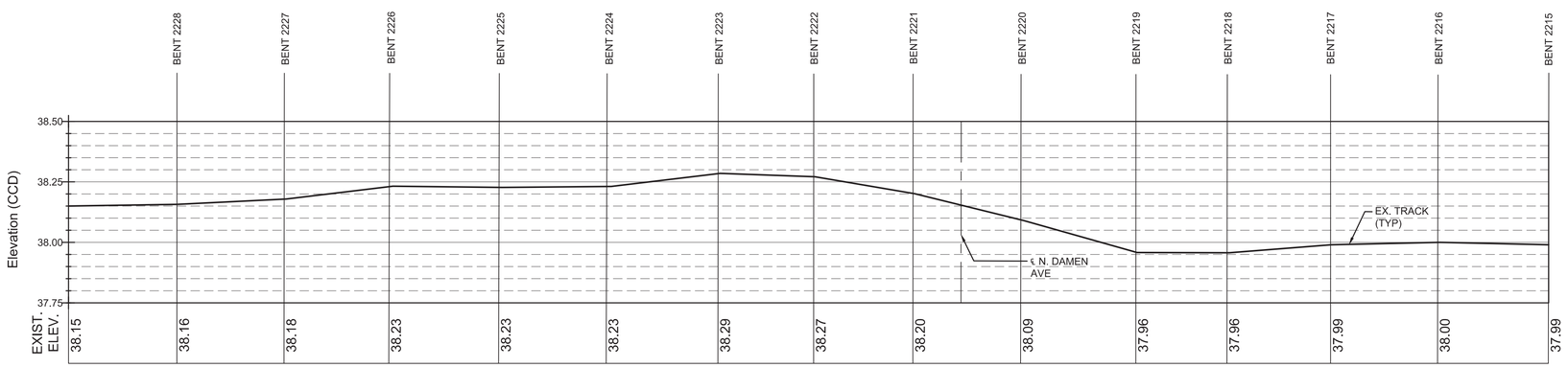

WESTBOUND TRACK ALIGNMENT: INNER TRACK
Scale: 1" = 30'
Vert. Exaggeration = 100

GENERAL NOTE:

1. CONTRACTOR SHALL SURVEY THE EXISTING RAIL AND TRACK STRUCTURE, AFTER TRACK COLUMN REPLACEMENT, TO VERIFY DIMENSIONS AND ELEVATIONS PROVIDED.

DESIGN BY:									
DRAWN BY:									
CHECKED BY:									
APPROVED BY:			01/27/2020	ISSUE FOR BID		WP	TB		
CDOT/APPROVED BY:		NO.	DATE	REVISIONS	DES.	DRW.	CHK.	DCCO	CDOT

TERRA ENGINEERING LTD.
225 W Ohio Street - Suite 400; Chicago, IL 60654
(T) 312-467-0123 | (F) 312-467-0220

This survey was prepared by TERRA Engineering, Ltd. It is included in the documents for information only. The contractor shall verify all information shown. Perkins and Will is not responsible for the accuracy or completeness of this information.

CDOT
CHICAGO DEPARTMENT OF TRANSPORTATION
DIVISION OF ENGINEERING

154 N DAMEN AVE - DAMEN GREEN LINE STATION

TRACK PROFILE - WESTBOUND

CDOT PROJECT D-7-135

DATE: 01/27/2020

SPEC. NO.

DRAWING NO.
TP00-02

REVISION NO.

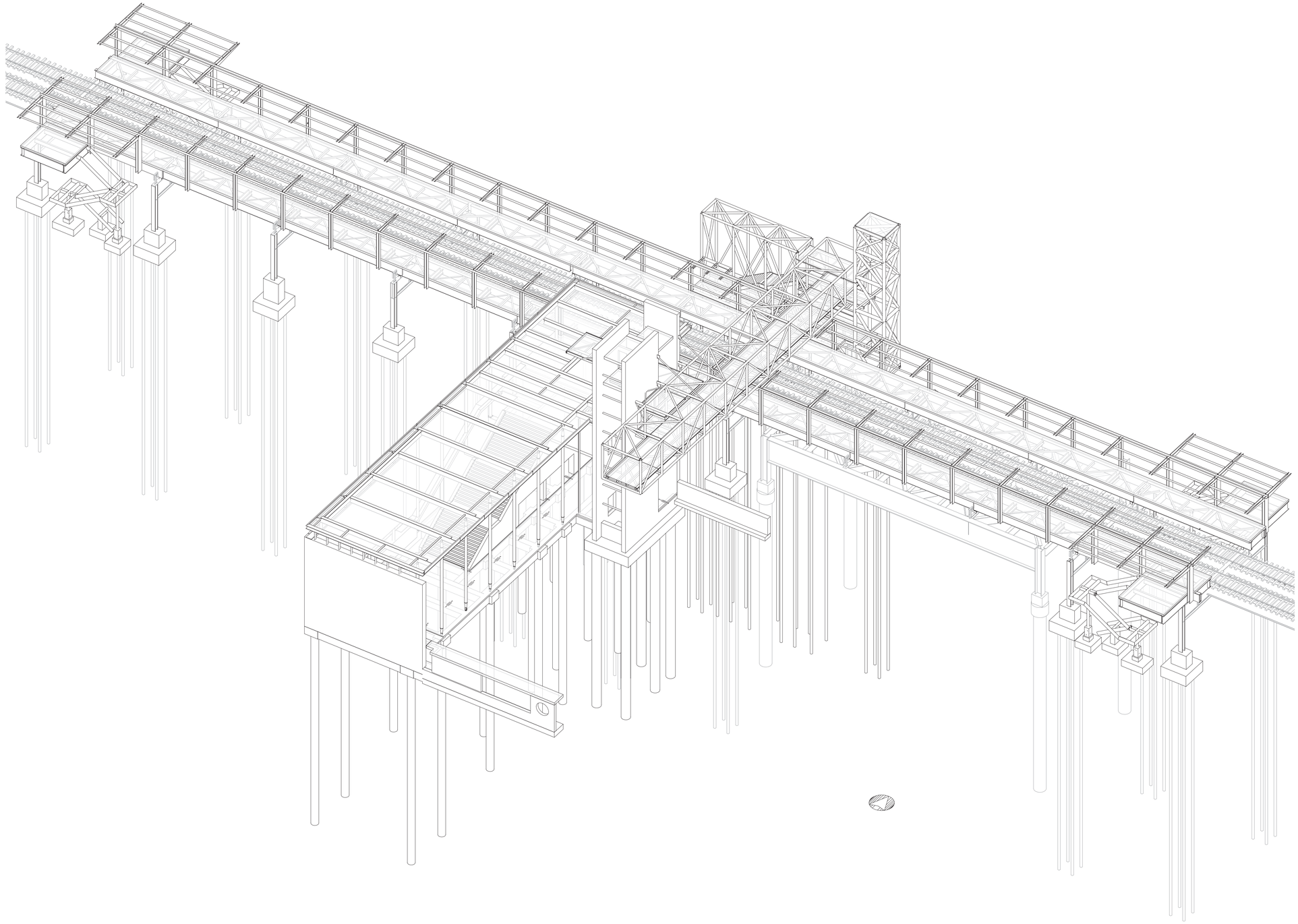

DESIGN BY:									
DRAWN BY:									
CHECKED BY:									
APPROVED BY:			01/27/2020	ISSUE FOR BID	EJT	MW	TRM		
CDOT/APPROVED BY:		NO.	DATE	REVISIONS	DES.	DRW.	CHK.	DCCO	CDOT

SIMPSON GUMPERTZ & HEGER
Engineering of Structures and Building Enclosures
Simpson Gumpertz & Heger Inc.
135 South LaSalle Street, Suite 3800
Chicago, Illinois 60603
main: 312.754.7500 fax: 312.754.7501
www.sgh.com

PERKINS+WILL
The Wrigley Building
410 North Michigan Ave.
Suite 1600
Chicago, IL 60611
t 312.755.0770
f 312.755.0775
www.perkinswill.com

CDOT
CHICAGO DEPARTMENT OF TRANSPORTATION
DIVISION OF ENGINEERING

154 N DAMEN AVE - DAMEN GREEN LINE STATION

COVER SHEET

CDOT PROJECT D-7-135

DATE: 01/27/2020

SPEC. NO.

DRAWING NO. **S00-00**

REVISION NO.

ABBREVIATIONS:

ABBREVIATION	WORD OR PHRASE
&	And
@	At
ACI	American Concrete Institute
ACON	Architecturally Exposed Concrete
ADD'L	Additional
AESS	Architectural Exposed Structural Steel
AISC	American Institute of Steel Construction
ALT.	Alternate
APPROX.	Approximate
ARCH.	Architect
ASD	Allowable Strength Design
ASTM	American Society for Testing and Materials
AWPA	American Wood Preservers Assoc.
AWS	American Welding Society
ASCE	American Society of Civil Engineers
AREMA	American Railway Engineering and Maintenance-of-Way Assoc
AASHTO	American Association of State Highway and Transportation Officials
A/V	Audio Visual
BLK'G	Blocking
BM	Beam
BN	Boundary Nail
BOT.	Bottom
BRG.	Bearing
BS	Both Sides
BTWN.	Between
C	Camber
CB	Concrete Beam
CBC	Chicago Building Code
CC	Center to Center
CCD	Chicago City Datum
CTA	Chicago Transit Authority
CJ	Control Joint
CIP	Cast-in-place
C.L., CL	Center Line
CLG.	Ceiling
CLR.	Clear
CMU	Concrete Masonry Unit
COL.	Column
CONC.	Concrete
CONN.	Connection
CONT.	Continuous
CJP	Complete Joint Penetration
CTR.	Center
DBA	Deformed Bar Anchor
DBL.	Double
DC	Demand Critical (Weld)
DET., DTL.	Detail
DF	Douglas Fir
DIA., ∅	Diameter
DIAG.	Diagonal
DL	Dead Load
DN.	Down
DWG(S).	Drawing(s)
(E)	Existing
EA.	Each
EF	Each Face
EJ	Expansion Joint
ELEV., EL.	Elevation
EMB., EMBED.	Embedment
EN	Edge Nail
EOS	Edge of Slab
EQ.	Equal
EQUIP.	Equipment
ESC	Escalator
ES	Each Side
EW	Each Way
FCM	Fracture Critical Member
FDN.	Foundation
FF	Finish Floor
FG	Finish Grade
FIN.	Finish
FLR.	Floor
FOC	Face of Concrete
FS	Far Side
FT.	Foot, Feet
FT	Fully Tempered
FTG.	Footing
GA.	Gauge
GALV.	Galvanized
GB	Grade Beam
G.L.	Grid Line
GR.	Grade
HDG	Hot-dip Galvanized
HGR.	Hanger
HK.	Hook
HORIZ.	Horizontal
HSB	High Strength Bolt
HSS	Hollow Structural Section
HT.	Height
IBC	International Building Code
ICC	International Code Council
IN. or "	Inch, Inches
INT.	Interior
INV.	Inverted
K	Kips
KSI	Kips per Square Inch
LLA	Life Line Anchor
LBS.	Pounds
LL	Live Load
LLH	Long Leg Horizontal
LLV	Long Leg Vertical
LONG.	Longitudinal
LTWT.	Lightweight

ABBREVIATIONS:

ABBREVIATION	WORD OR PHRASE
MAX.	Maximum
MECH.	Mechanical
MEP	Mechanical, Electrical, and Plumbing
MFR.	Manufacturer
MIL.	0.001 Inch
MIN.	Minimum
MISC.	Miscellaneous
(N)	New
NO., #	Number
NS	Near Side
NTR	Notch Toughness Required
NTS	Not to Scale
NWT.	Normal Weight
OC	On Center
OD	Outside Diameter
OH	Opposite Hand
OPNG.	Opening
OPP.	Opposite
PAF	Powder-Actuated Fasteners
PART.	Partial
PCF	Pounds per Cubic Foot
PL	Plate
PLY.	Plywood
PP	Partial Penetration
PSF	Pounds per Square Foot
PSI	Pounds per Square Inch
PT	Pressure Treated
PW	Puddle Weld
RAD.	Radius
RD	Roof Drain
REINF.	Reinforcing
REQ.	Required
RF.	Roof
RO	Rough Opening
RND.	Round
RR	Remove & Replace
SAD	See Architectural Drawings
SC	Slip Critical Bolt
SCHED.	Schedule
SEOR	Structural Engineer of Record
SG	Sentry Glass Interlayer
SHT.	Sheet
SIM.	Similar
SMD	See Mechanical Drawings
SOG	Slab on Grade
SP	Southern Pine
SS	Stainless Steel
SSE	Specialty Structural Engineer
STAGG'D., STG.	Staggered
STD.	Standard
STIFF.	Stiffener
STL.	Steel
STRUCT.	Structural
SYMM., SYM.	Symmetrical
T/	Top of
T&B	Top and Bottom
T&G	Tongue & Groove
THK	Thick
TN	Toe Nail
TOC	Top of Concrete
TOS	Top of Steel
TOW	Top of Wall
TYP.	Typical
UON	Unless Otherwise Noted
VERT.	Vertical
VIF	Verify in Field
W/	With
W/O	Without
WP	Work Point
WWR	Welded Wire Reinforcing

GRID NOTES:

22##	EXISTING TRACK BENT NUMBER/GRID
##	EXISTING TRACK STRUCTURE GRID
FA##	EXISTING TRACK FLOOR BEAM NUMBER/GRID
p#	NEW PLATFORM STRUCTURE GRID
b#	NEW BRIDGE STRUCTURE GRID
s#	NEW STATION HOUSE STRUCTURE GRID
	'F' INDICATES FIXED CONNECTION IN STRUCTURE
F E	'E' INDICATES EXPANSION CONNECTION IN STRUCTURE

GENERAL STRUCTURAL NOTES

GENERAL REQUIREMENTS AND DESIGN CRITERIA

1. **GENERAL**
   A. SGH is the structural engineer of record (SEOR) and the structural design professional for this project.
   B. The SEOR is responsible for the structural project documents which include these general notes, the structural drawings, and the following specification sections:
      1. 02 41 16 Structure Demolition
      2. 02 41 19 Selective Structure Demolition
      3. 02 16 20 Monitoring of Adjacent Structures During Construction Activities
      4. 03 01 30 Maintenance of Concrete
      5. 03 20 00 Concrete Reinforcement and Embedded Assemblies
      6. 03 20 10 Concrete Reinforcement Epoxy Coated
      7. 03 30 00 Cast-in-Place Concrete
      8. 03 33 00 Cast-in-Place Architectural Concrete
      9. 03 41 00 Precast Concrete at Platform
      10. 05 10 30 Structural Steel
      11. 05 12 13 Architecturally Exposed Structural Steel Framing
      12. 05 51 10 Metal Stairs with Stainless Steel Treads
      13. 05 80 10 Expansion and Bearing Pads and Assemblies
      14. 06 15 43 Nail Laminated Timber
      15. 31 09 13 Monitoring of Track Structure During Construction Activities
      16. 31 15 00 Structural Shoring
      17. 31 50 00 Excavation Support and Protection
      18. 31 63 33 Drilled Micropiles
      19. 31 64 00 Caissons
   C. Chicago Department of Transportation (CDOT) is the Commissioner for this project. All correspondence from the contractor shall be routed through the Commissioner.
   D. Deferred submittals required by the SEOR for this project are listed within the specification sections noted above and outlined within the general notes. Deferred submittal items shall not be installed until the deferred submittal documents have been approved by the building official.
   E. Documentation or submittals required by referenced reports shall be submitted to and reviewed by the author of the report.
   F. The project specifications are an integral part of the contract documents and will be used in conjunction with the structural drawings and general notes. In cases, if any, where requirements indicated on the structural drawings differ from the specifications, notify the Commissioner.
   G. The contractor will identify engineering tasks required to perform any related construction process including, but not limited to, means and methods of construction, formwork, shoring, and submission of documents requested outside of the structural project documents listed above. The contractor will hire a licensed structural engineer within the project location jurisdiction to perform construction related engineering tasks or document reviews.
   H. Unless otherwise noted, details, sections and notes contained in the structural contract documents will be considered typical for all similar conditions even if not explicitly referenced.
   I. Deficient work and/or work not in conformance with the contract documents will be repaired at the contractor's expense. The contractor will reimburse the parties required for performing the design services arising from deficient work, review of modifications/contractor substitution, or expediting of submittals.
   J. Cost of investigation and/or redesign incurred by the SEOR due to contractor errors will be at the contractor's expense.
   K. The contractor is solely responsible for the means, methods, techniques, sequences, and operation of construction and safety precautions and programs incidental thereto.
   L. Contractor shall make no deviation from the design drawings without written approval from the Commissioner. Proposed substations will only be considered when engineering analysis and design calculations sealed by a licensed structural engineer in the state of IL are included with submission.

2. **ELEVATIONS & DIMENSIONS**
   A. The contractor will submit a single dimensioned and coordinated drawing for each level showing the locations of all slab edges, sleeves, blockouts and openings required by all trades prior to initiating any work.
   B. All dimensions, elevations and conditions will be verified in the field by the contractors and any discrepancies will be brought to the attention of the SEOR for clarification before proceeding with the affected part of the work.
   C. Existing construction shown on these drawings was obtained from site investigation and/or information shown on referenced existing drawings, and can be used for bidding purposes only. The contractor shall verify in the field (VIF) all existing job conditions, review all drawings, and verify dimensions and elevations noted in the contract documents as (+/-) prior to the submission of shop drawings. Upon receipt of shop drawings, the SEOR has the right to assume that all field dimensions, elevations and conditions have been verified by the contractors and that the shop drawings accurately reflect such verifications unless stated otherwise on the shop drawings.
   D. Use only dimensions indicated on the drawings. Do not scale these drawings or use dimensions obtained from electronic drawing or model files, if provided.
   E. Assume equal spacing of framing members if not indicated on the drawings.
   F. Centerlines of framing elements coincide with column centerlines unless noted otherwise.
   G. Cantilevered beams are same size as back span, unless noted otherwise

3. **EXISTING DRAWINGS**
   A. The structural contract documents were developed using the following drawings:
      1. Lake Street Reconstruction, Damen Avenue to Ashland Avenue, CDOT Project No. B-4-118, prepared by Transystems, dated 20 June 2017.
      2. Lake Street Line (Canal Street to Talman Avenue) Column Base and Foundation Renewal drawings prepared by Parsons De Leuw, Inc. and dated February 1994.
      3. CTA Engineering Assessment West Corridor, Structures Infrastructure Assessment Report, by Envirodyne Engineers, dated 1990.
      4. Lake Street Elevated Railroad, Chicago, IL, Structural Drawings, prepared by Pencoyd Bridge & Construction Co., dated September 1890.
   B. Advanced Underground Package for Damen Green Line Station (CDOT Project Number D-7-135A), by Simpson Gumpertz & Heger Inc, dated 09 August 2018.
   C. Existing Structure Condition Assessment Report for the New Damen Green Line Station, by Simpson Gumpertz & Heger Inc., dated 5 September 2018.
   D. Field Observation of Temporary Shoring Towers, Damen Green Line Station, by Simpson Gumpertz & Heger Inc., dated 29 November 2018.

4. **BUILDING CODES AND REFERENCED STANDARDS**
   A. AASHTO LRFD Bridge Design Specifications (2012) – American Associations of State Highway and Transportation Officials [AASHTO]
   B. AREMA Manual for Railway Engineering (2017) - American Railway Engineering and Maintenance-of-way Association [AREMA]
   C. ASCE 7-10 Minimum Design Loads for Buildings and Other Structures (2010) – American Society of Civil Engineers [ASCE]
   D. Chicago Building Code (2018) – Chicago Department of Buildings [CBC]
      a. The City of Chicago Department of Buildings Code Memorandum titled Pile Deep Foundations, dated 15 June 2017.
   E. CTA Infrastructure Design Criteria Manual, Chapter 7 Structural, Rev 06, February 2017 – Chicago Transit Authority [IDCM]
   F. CTA Adjacent Construction Manual (2017) and issued Memoranda - Chicago Transit Authority [CTA]
   G. International Building Code (2015) – International Code Council [IBC]

5. **LATERAL LOAD RESISTING SYSTEM**
   A. Station House + Tower/Bridge:
      a. Primary lateral load resistance and stability of the completed Station House building structure is provided by cast-in-place reinforced concrete shear walls, framed in each orthogonal direction. The lateral load resistance and stability of the completed Tower/Bridge structure is provided by the station house reinforced concrete shear walls at the south end and by cantilevered steel columns at the north end.
   B. Track Structure:
      a. Primary lateral load resistance and stability of the completed track structure is provided by the existing vertical track columns and bent girders, framed in north-south direction. The bent girders and columns create a fixed-base moment frame in the north-south direction and a cantilever column system in the east-west direction.

6. **SUBMITTALS**
   A. The General Contractor will review each submittal prior to forwarding to the Commissioner. The General Contractor is to stamp each submittal and include a submittal tracking number.
   B. Prior to sending the submittal to the Commissioner, the General Contractor shall verify;
      a. The submittal is based on the latest design.
      b. Commissioner comments from previous submittals have been addressed.
      c. The work is coordinated among all construction trades.
      d. Revisions to the submittal are clearly denoted by circling or clouding the revisions.
      e. Any deviation or substitution from the design documents are clearly denoted with circles or bubbles.
   C. The Commissioner may return, without comment, submittals that do not meet the above requirements.
   D. The General Contractor will identify engineering tasks required to perform any related construction process including, but not limited to, means and methods of construction, formwork and shoring, and submission of documents requested outside of the structural project documents listed above. The General Contractor will hire a licensed structural engineer within the project location jurisdiction to perform construction related engineering tasks or document reviews.
   E. Documentation or tasks requested by referenced reports will be submitted to and reviewed by the Commissioner's Agent who authored the report or requested the task.
   F. Loads Imposed - Indicate approximate loads used in design based on information available, but not final. Anywhere "Loads Imposed" are exceeded the contractor shall employ or retain a licensed SSE within the project jurisdiction to evaluate the structure and modify it according to meet the project building codes and reference standards. Loads imposed include, but not limited to: elevators, rotogate, escalator, misc. equipment, misc. machines.

7. **DEFERRED SUBMITTALS**
   A. All deferred submittals shall be designed in conformance with the building and design codes referenced within The Project. The designer of the deferred submittal items is referred to herein as the Specialty Structural Engineer (SSE).
   B. Documentation for deferred submittals shall be submitted to the Commissioner for review of its general conformance to the design of the building. The deferred submittal items will not be installed until the deferred submittal documents have been approved by the Commissioner.
   C. All deferred submittals shall be coordinated with their associated calculations. Calculations shall be submitted with the corresponding drawings.
   D. Shop drawings of deferred submittal components shall include the SSE's stamp and shall be approved by the SSE prior to review by the Commissioner for loads imposed on the base structure. The SSE is responsible for code conformance and all necessary connections not specifically called out on The Project Documents. Shop drawings shall include magnitude and direction of all loads imposed on the base structure.
   E. Employ or retain a licensed SSE within the project location jurisdiction to design, analyze, and detail the following in accordance with the Documents. Design includes all necessary connections to the base building structure.
      a. Steel pipe micropile.
      b. All concrete mix design.
      c. Architecturally exposed concrete mix designs.
      d. Temporary structural shoring.
      e. Track structure monitoring plan.
      f. Structural Cast Steel Connections
      g. Adjacent structure monitoring plan.
      h. Perimeter sheet piling wall.
      i. Temporary earth retaining systems.
      j. Exterior wall glazing systems.
      k. Window washing anchor systems (LLA).
      l. Platform plant precast concrete.
      m. Nail Laminated Timber
      n. Engineered substitutions.
      o. Bearing pads and assemblies.
      p. Signage, telecommunications, A/V, and MEP support frames and connections to base building.
      q. Stainless steel bar grating and connections to base building structure
      r. Metal deck
      s. All miscellaneous metals, including but not limited to elevator rail supports, sheave beams, hoist beams, etc. See specification 05 50 00 for other miscellaneous metals requirements

8. **TEMPORARY LOADS AND SHORING**
   A. Construction Phase loads imposed on the base building structure and temporary conditions intended to accommodate construction means and methods are not explicitly considered in this design. The contractor shall be solely responsible for all construction-phase loads imposed on the base building structure.
   B. Structural stability is achieved in the finished construction installed in its entirety. The contractor is responsible for the stability of the structure until the construction of the structure reaches its finished state. Not all shoring necessary to complete the project is shown. The contractor will identify and determine where and to what extent temporary shoring is required.
   C. The contractor is responsible for the design, installation, and removal of all temporary bracing and construction supports, for new and existing structures, as necessary to complete the project.
   D. Materials and equipment will be stored and transported in a manner so as not to exceed the allowable floor loadings indicated in the drawings.
   E. The contractor will retain a structural engineer licensed in the project location's jurisdiction to design all temporary bracing and construction supports.
   F. Site observation by field representative of the Commissioner shall not include inspection of items above.

FOUNDATIONS

1. REFERENCE GEOTECHNICAL REPORT
   A. Foundation design is in accordance with the recommendations provided by GEI Consultants
      1. Subsurface Exploration and Geotechnical Engineering Report - CTA Green Line Elevated Station, Damen & Lake, Chicago, IL, dated 12 July 2018.
      2. Additional information for the items noted below can be found within the geotechnical report.

2. FOUNDATION DESIGN PARAMETERS
   A. Caissons:
      a. Net Allowable Bearing Pressure: 32 ksf
   B. Drilled Micropiles:
      1. See Micropile Delegated Design Sheet S30-04.
   C. Spread Footings:
      a. Net Allowable Bearing Pressure: 3 ksf
   D. Passive Resistance Coefficients (to resist impact in foundations) = (3.85 k_p - 0.25 k_a) using a S.F. = 1.0 for impact duration.

3. FOUNDATION SETTLEMENT
   A. The referenced Geotechnical Report indicates the allowable differential settlement between any two or more adjacent shallow foundation elements in service to be 1/2 in. or less.

4. GROUND WATER TABLE
   A. The referenced Geotechnical Report indicates the ground water table elevation is approximately +10ft CCD

5. EXCAVATION
   A. All foundation excavation to be inspected by the Geotechnical Engineer.
   B. The elevations shown on the drawings are anticipated and actual elevations are to be established in the field by the Geotechnical Engineer, but in no case shall the bottom of any foundation element be located less than 3 ft – 6 in. below the lowest adjacent surface exposed to freezing.

6. FOUNDATION PLACEMENT & PROTECTION
   A. Do not place foundation concrete or grout in water or on frozen ground.
   B. Protect in-place foundations and slabs from frost penetration until the project is complete. Do not use salt or chloride compounds to de-ice the site.
   C. The Contractor shall provide continuous lateral and sub-adjacent support to adjoining property and the structures located thereon.
   D. Protect existing foundations to remain from damage during construction activity.

DESIGN BY:								
DRAWN BY:								
CHECKED BY:								
APPROVED BY:		01/27/2020	ISSUE FOR BID	EJT	MW	TRM		
CDOT/APPROVED BY:	NO.	DATE	REVISIONS	DES.	DRW.	CHK.	DCCO	CDOT

SIMPSON GUMPERTZ & HEGER
Engineering of Structures and Building Enclosures
Simpson Gumpertz & Heger Inc.
135 South LaSalle Street, Suite 3800
Chicago, Illinois 60603
main: 312.754.7500 fax: 312.754.7501
www.sgh.com

PERKINS+WILL
The Wrigley Building
410 North Michigan Ave.
Suite 1600
Chicago, IL 60611
t 312.755.0770
f 312.755.0775
www.perkinswill.com

CDOT
CHICAGO DEPARTMENT OF TRANSPORTATION
DIVISION OF ENGINEERING

154 N DAMEN AVE - DAMEN GREEN LINE STATION

STRUCTURAL GENERAL NOTES

CDOT PROJECT D-7-135 | DATE: 01/27/2020

SPEC. NO.

DRAWING NO. **S00-01**

REVISION NO.

STRUCTURAL STEEL

1. STRUCTURAL SHAPES
   A. Station House and Bridge
      a. Wide Flange Shapes — ASTM A992 (Fy = 50 ksi)
      b. Hollow Structural Sections — ASTM A1085 (Fy = 50ksi)
      c. Angles and Channels — ASTM A36, UON (Fy = 36 ksi)
      d. Plates — ASTM A572, UON (Fy = 50 ksi)
      e. Built-up Shapes — ASTM A709 (Fy = 50 ksi)
   B. Track Supporting Structure
      a. Wide Flange Shapes — ASTM A709 (Fy = 50 ksi)
      b. Plates — ASTM A709, UON (Fy = 50 ksi)
      c. Angles and Channels — ASTM A36, UON (Fy = 36 ksi)
   C. Platform and Canopy
      a. Wide Flange Shapes — ASTM A992 (Fy = 50 ksi)
      b. Hollow Structural Sections — ASTM A1085 (Fy = 50ksi)
      c. Angles and Channels — ASTM A36, UON (Fy = 36 ksi)
      d. Plates — ASTM A572, UON (Fy = 50 ksi)

2. BOLTED CONNECTIONS
   A. Bolts — ASTM A325
      a. Platform and Track Structure: 7/8"Ø Slip-Critical (SC) bolts, Class B faying surface bolts, UON.
      b. Other Structures: 7/8"Ø Type N bolts, UON.
   B. Nuts — ASTM A563
   C. Washers — ASTM F436
   D. Provide three (min.) bolts per connection, UON.
   E. Twist-off F2280 and F1852 bolts are prohibited, except in temporary structures.
   F. A490 bolts are prohibited, except in temporary structures.

3. ANCHOR RODS
   A. ASTM F1554 Grade 55 with supplementary requirement S1 (weldability) rods , UON.

4. WELDING ELECTRODES
   A. Conform to AWS Specifications for electrodes based on welding process and the type and grade of steel. E70XX electrodes (min.) for fillet welds.
   B. Welds shall be continuous fillet welds, UON. The minimum size shall be 1/4" or as required by Table J2.4 of AISC 360, whichever is larger.
   C. Field welding for the track supporting structure is not allowed unless specifically approved by the CTA.

5. FABRICATION
   A. Shop fabricate to greatest extent possible by welding including beam stiffeners, column caps and bases, and connection elements.
   B. Make holes and copes required for connections in the shop.
   C. See CLOSED SECTION NOTES for additional fabrication requirements.
   D. Flame cutting shall not be allowed.

6. ERECTION
   A. Provide anchor rods, steel wedges, threaded screws, leveling nutes, or shims as necessary to temporarily support and plumb all columns.
   B. Grout solid under base plates immediately after columns are plumb.
   C. Bearing surfaces of all columns shall be finished for full bearing contact or welds shall be designed to transmit all axial compression.
   D. Do not field cut or field modify any structural steel without prior written approval by Engineer of Record and Architect for each specific case.
   E. Provide upward camber to all members shown to have camber. Survey steel beams in the field to measure camber after erection and prior to subsequent construction of the floor system. Amount measured in field prior to installation shall not deviate more than allowed by the AISC specifications. Do not camber members located below elevator doors.
   F. Where no camber is indicated, beams shall be fabricated so that after erection, any natural camber is upward.
   G. Splicing structural members where not detailed on Structural Drawings is prohibited without prior approval by SEOR and Architect.

7. FIREPROOFING
   A. For fireproofing and fireproofing requirements, see Architectural Drawings and Specifications.

8. PAINT
   A. Shop prime all steel not encased in concrete, not painted per AESS requirements, not fireproofed, or not galvanized.
   B. See Architectural Drawings and Specifications for finish coat requirements.

9. STAINLESS STEEL
   A. All stainless steel shall be ASTM A316L (Fy=30 ksi min), (E=28,000 ksi min.). Stainless steel components shall not be welded to carbon steel components. When stainless steel components or fasteners will be attached to carbon steel or galvanized steel, the stainless steel components shall be isolated from the carbon steel using non-conductive gaskets or insulating washers or bushings.
   B. Protect all stainless steel from welding operations.

10. HOT-DIP GALVANIZING
    A. Hot-dip galvanize all track steel columns, including but not limited to connection materials, base plate, and leveling plate shall be hot-dip galvanized to ASTM A123. Touch-up all field welds, or areas where hot-dip galvanizing is damaged, with a zinc-rich paint ("ZRC cold galvanized compound") after steel is completely installed.
    B. ASTM A123 Standard specification for zinc (hot-dip galvanized) coating on iron and steel products covers the requirements for galvanizing by the hot-dip process on iron and steel products made from rolled, prestressed, and forged shapes, casting, plates, bars, and strips.
    C. Any galvanized material rejected by an inspector for any reason except embrittlement may be stripped, re-galvanized, and resubmitted for inspection.
    D. The welding surfaces of galvanized steel shall either be masked prior to galvanizing or the galvanizing zinc shall be removed from welding surfaces after galvanizing by mechanical means to expose carbon steel base metal.
    E. Base metal preparation for welding shall comply with AWS D1.1 Section 5.14 and AISC Specification Section M3.5.
    F. Remove slag and clean welds.
    G. Seal weld all seams not otherwise welded.
    H. Specified requirements for hot-dip galvanizing;
       a. Zinc-rich paint:
          1. Use is expected only for plug welds and any site alterations caused by inaccurate fabrication or installation. Latter use is only after contractor has informed the SEOR of issue and provided remedial option(s) for review.
          2. Application procedure
             A. Wipe surface area for touch-up with solvent per SSPC-SP1 recommendations.
             B. Prepare bare metal to be primed following SSPC-SP11 power tool cleaning methods.
             C. Check ambient air and surface temperatures and dew point using calibrated equipment. Item surface temperature must be a minimum of 5 degrees above the dew point before repair can continue.
             D. Apply ZRC cold galvanized compound by brush to bare metal only. Spray application is not acceptable.
             E. Allow 24 hours prior to relocating with brush application by hand.
          3. Finish - continuous, smooth, uniform.
          4. Appearance - free from uncoated areas, blisters, flux deposits and gross dross inclusions as well as having no heavy zinc deposits that interfere with intended use.
          5. Adherence - the entire coating should have a strong adherence throughout the service life of galvanized steel.

STRUCTURAL STEEL

11. WELDING TO DIS-SIMILAR METALS
    A. The Contractor shall verify the acceptability of existing steel construction to accept welding as per the following notes:
       1. Sample existing steel by taking steel filings, coring, or cutting from a location as directed by the Engineer of Record. Note: existing steel sections to be discarded are the preferable location for sampling.
       2. Test the steel samples to determine the chemical properties for weldability.
       3. Determine weldability by determining carbon equivalent. Submit to Engineer of Record for review the laboratory analysis report listing the quantities of each element.
       4. Prepare a welding procedure specification per AWS D1.1. This shall include filler metal properties, electrode types, preheat requirements, and limits on weld length, if any.
       5. Provide steel yield strength test results.
    B. The General Contractor shall have all welds to existing steel visually inspected by an AWS D1.1 qualified/certified welding inspector. Reports confirming the acceptability of all welds shall be submitted to the Engineer of Record. All weld inspections and approvals shall be made before the welded part is loaded.
    C. Welding carbon steel to galvanized steel
       a. Contractor shall prevent spattering of weld material during welding process.
       b. Use mechanical means to remove existing galvanizing from the faying surfaces prior to welding.
       c. Clean slag and zinc oxide from weld between passes.
       d. Once completed, coat the weld with a zinc rich primer or galvanizing compound (use > 95% metallic zinc)
    D. Welding stainless steel to carbon steel is prohibited.

12. ARCHITECTURALLY EXPOSED STRUCTURAL STEEL
    A. Steel subject to AESS requirements includes the following general locations;
       1. Main station pipe columns and connections.
       2. Pedestrian bridge pipe steel and connections.
       3. North end tube steel and connections.
       4. North end columns, support steel, and connections.
       5. Canopy elements and connections.
    B. See drawings for additional information for the location of AESS Steel.
    C. Refer to AISC Code of Standard Practice (303-16) for AESS level definitions and AESS Category Matrix, Table 10-1. Table 10-1 item ID 3.6 is required and not optional.
    D. Contractors shall provide shop and erection drawings indicating which members and connections are considered as AESS members.
    E. See Architectural Drawings for extent and location of AESS mockups.
    F. For primer, see Structural Steel Specifications.
    G. For paint/ coating, see Architectural Specifications.
    H. Contractor shall provide shop and erection drawings clearly indicating which members and connections are considered as AESS members

13. EMBED PLATE HEADED STUDS AND PLATES
    A. Provide embed type studs which conform to ASTM A29 (Grade 1015 - 1020 cold finished carbon steel) with a minimum tensile strength of 60 ksi.
    B. Provide Nelson D6L A706 Grade 60 deformed bar weld studs where indicated on the drawings.
    C. See the drawings for number and locations of studs on beams and embed plates.
    D. Provide embed plates which conform to ASTM A572 (Fy = 50 ksi)
    E. All embed assemblies (plates, studs, and deformed bars) shall be hot dipped galvanized to ASTM A123.
    F. Include embedded steel plates in concrete for all trades on the steel shop drawings, including embedded steel plates required in deferred submittals.

14. ELECTRICAL ISOLATION
    A. All steel associated with the track structure must be electrically isolated from concrete foundations using electrometric isolation pads, bushings, and washers manufactured by Fabreeka or approved equal.
    B. Isolation shall be per project specifications and with a dielectric strength of 160 volts/mil.

15. EXISTING MATERIAL PROPERTIES
    A. Evaluation of existing track-supporting structure based on the following material properties:
       a. Bent Girder Plates and Angles (Wrought Iron)
          - F_y = 29 ksi
          - F_u = 48 ksi
       b. Rivet Allowable Shear Stress — 11 ksi (AREMA 2017 Table 15-7-1 per CTA)
    B. Refer to the CTA Engineering Assessment West Corridor, Structures Infrastructure Assessment Report (Envirodyne, 1990) for additional information on material testing of existing material properties.

16. FRACTURE CRITICAL MEMBERS (FCM)
    A. Fracture critical members and connection elements are denoted on drawings as FCM and are defined as follows:
       a. New track columns.
       b. Flange plate connection from top of existing bent girder to new column.
       c. New track column base plate and connecting elements.
    B. FCM material and fabrication requirements will conform to the technical specifications and all requirements and tests specified in AREMA, 2017 Section 15.1.14 Fracture Critical Members.
    C. FCM welds shall be fabricated in accordance with AWS D1.5.
    D. FCM members shall meet Charpy V-Notch Impact Test requirements for a min. service temperature of -30° F (Zone 2 per AREMA 2017 Table 15-1-15).

17. NOTCH TOUGHNESS REQUIRED (NTR)
    A. Components denoted on the drawings as NTR shall conform to the supplemental requirements for Notch Toughness, Zone 2 in accordance with AREMA 2017 Table 15-1-15.

18. STANDARD SPECIFICATIONS AND REFERENCE STANDARDS
    A. AISC 360, Specification for Structural Steel Buildings
    B. AISC 341, Seismic Provisions for Structural Steel Buildings, Including Supplement No.1
    C. AISC 303, Code of Standard Practice for Steel Buildings and Bridges
    D. AWS D1.1, Structural Welding Code—Steel
    E. AWS D1.5, Bridge Welding Code
    F. RCSC Committee A.1—Specification for Structural Joints Using High-Strength Bolts
    G. ASTM A123 and A153 American Galvanizers Associates (AGA) - Recommended Details for Galvanized Structures

STRUCTURAL CAST STEEL COMPONENTS

1. MATERIALS
   A. Cast Members — ASTM A572 (Fy = 50 ksi)

2. COMPONENTS
   A. General
      a. Custom designed, structural cast steel components manufactured by Cast Connex or approved equal.
   B. Structural Requirements
      a. Design cast steel components to resist the forces indicated on the structural drawings within the out-to-out dimensions and tapers shown.
   C. Architectural Requirements
      a. The exterior shaping of the steel castings shall generally conform to that shown on the drawings. All edges shall be filleted and the manufacturer may draft flat surfaces away from parting lines.
      b. Furnish castings with visual inspection of exterior surfaces to comply with ASTM A802 Level 1.
      c. Welds between the castings and attaching structural members shall be ground flush and smooth to the exterior of the casting.

3. SUBMITTALS
   A. Product Data: Casting material test reports, production parameters, and non-destructive test reports.
   B. Shop Drawings: Shop drawings and calculations signed and sealed by the Contractor's SSE including the interior and exterior dimensions and non-destructive examination requirements.
   C. Coordinate cast steel component shop drawings with structural steel shop drawings.
   D. See Architectural Drawings and Specifications for visual mockup requirements.
   E. See Structural Steel specification for Welding Procedure Specifications (WPSs) for welding structural steel to cast members.

4. QUALITY ASSURANCE
   A. Casting Inspector Qualifications: TC-1A in accordance with American Society for Nondestructive Testing, Inc. (ASNT), or equivalent independent qualified agency.
   B. Engineering Qualifications: Structural Engineer licensed in the State of Illinois.
   C. Manufacturer Qualifications: Specializing in Structural Cast Steel Components with relevant project experience in the last 5 years.

5. DELIVERY, STORAGE, AND HANDLING
   A. Deliver, store, and handle materials to avoid damage.
   B. Protect materials from corrosion and deterioration.

6. COORDINATION OF TOLERANCES BETWEEN CAST COMPONENTS AND STRUCTURAL STEEL
   A. Steel fabricator shall assume responsibility for the final coordination between cast steel component tolerances and the overall structural geometry, including allowances for fabrication and erection tolerances.
   B. Steel fabricator shall notify the manufacturer of any discrepancies between the cast steel component design and the overall structural geometry in a timely manner so that these discrepancies can be resolved prior to the creation of casting tooling.

7. EXECUTION
   A. Cast steel components are to be delivered to the steel fabricator shop and incorporated into the structural steel work by the steel fabricator.
   B. Base material joint preparation and cleaning:
      a. Prior to welding, steel casting surfaces shall be prepared by the steel fabricator to be clean and free from paint, oil, rust, scale, slab, grease, and other foreign materials that are detrimental to welding.
   C. Unless otherwise noted on the drawings, cast steel components are to be coated along with and using the same coating system as applied to the attaching structural steel elements.

8. STANDARD SPECIFICATIONS AND REFERENCE STANDARDS
   A. AISC 360, Specification for Structural Steel Buildings
   B. ASTM A802 - Standard Practice for Steel Castings, Surface Acceptance Standards, Visual Examination
   C. AWS D1.1, Structural Welding Code—Steel

CLOSED SECTION NOTES

1. All closed section (pipe and tube shall) shall incorporate the following into fabrication;
   A. Both ends of every element shall be sealed with a 1/4" plate fully welded within 9" of W.P.
   B. All horizontal members shall have a 1/2" dia weep hole installed on the bottom of the section at mid span.
   C. All vertical and diagonal elements shall have a 1/2" dia weep hole installed on the bottom of the section within 1'-0" of the work point or base.

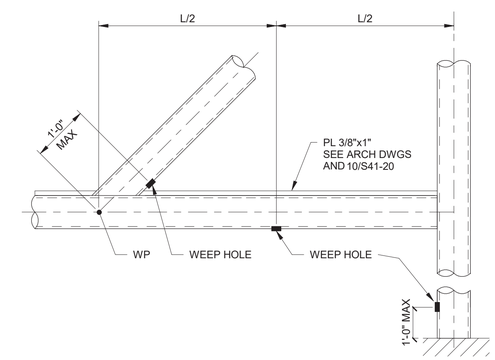

DESIGN BY:									
DRAWN BY:									
CHECKED BY:									
APPROVED BY:			01/27/2020	ISSUE FOR BID	EJT	MW	TRM		
CDOT/APPROVED BY:		NO.	DATE	REVISIONS	DES.	DRW.	CHK.	DCCO	CDOT

SIMPSON GUMPERTZ & HEGER
Engineering of Structures and Building Enclosures
Simpson Gumpertz & Heger Inc.
135 South LaSalle Street, Suite 3800
Chicago, Illinois 60603
main: 312.754.7500 fax: 312.754.7501
www.sgh.com

PERKINS+WILL
The Wrigley Building
410 North Michigan Ave.
Suite 1600
Chicago, IL 60611
t 312.755.0770
f 312.755.0775
www.perkinswill.com

CDOT
CHICAGO DEPARTMENT OF TRANSPORTATION
DIVISION OF ENGINEERING

154 N DAMEN AVE - DAMEN GREEN LINE STATION

STRUCTURAL GENERAL NOTES

CDOT PROJECT D-7-135 | DATE: 01/27/2020

SPEC. NO.

DRAWING NO. **S00-02**

REVISION NO.

CAST-IN-PLACE CONCRETE WORK

1. CONCRETE MIX PROPERTIES
   A. Element

	f'c (min.)	W/C (max.)	Air Content
a. Pile caps and piers	6,000 psi	0.45	6% +/- 1.5
b. Retaining walls	6,000 psi	0.45	6% +/- 1.5
c. Shallow Footings	5,000 psi	0.45	6% +/- 1.5
d. Foundation walls	6,000 psi	0.45	6% +/- 1.5
e. Grade beams	6,000 psi	0.45	6% +/- 1.5
f. Caissons and caisson caps	6,000 psi	0.45	6% +/- 1.5
g. Slabs-on-grade	5,000 psi	0.45	6% +/- 1.5
h. Columns and walls	6,000 psi	0.45	6% +/- 1.5
i. Mildly-reinforced slabs and beams	5,000 psi	0.40	6% +/- 1.5

   B. Density
      a. Normal Weight Concrete = 145 pcf
      b. Light Weight Concrete = 115 pcf
   C. Portland Cement:
      a. ASTM C150, Type I.
      b. Supplementary Cementitious Materials (SCMs).
         - SCMs are optional.
         - Fly Ash: ASTM C618 Class C or F
         - Ground Granulated Blast-Furnace Slag: ASTM C989, Grade 100 or 120
         - Silica Fume: ASTM C1240, amorphous silica.
         - Maximum percentage by weight of supplementary cementitious material
            - SCMs shall not exceed 50% of total cementitious material.
            - Fly Ash: shall not exceed 25% of total cementitious material
            - Ground Granulated Blast-Furnace Slag:
               1. Slag may not be used in areas that are affected by stray current.
   D. Aggregate
      a. Provide normal weight aggregate conforming to ASTM C33, UON.
      b. Provide lightweight aggregate conforming to ASTM C330, UON.
      c. Maximum coarse aggregate size: 3/4 in. nominal, UON.
      d. Fine aggregate: free of material with deleterious reactivity to alkali in cement.
   E. Admixtures
      a. Provide the following admixtures for CIP Mezzanine Slab and CIP Stairs inside the station house, in addition to requirements in specification 03 30 00.
         - Provide min. 2 gal/cu yd of corrosion inhibitor
         - Provide shrinkage reducing admixture
         - Refer to specification 03 33 00 for additional information on corrosion inhibitor and shrinkage reducing admixture.
   F. The use of recycled concrete is prohibited.
   G. Seal exposed surfaces with Hydrozo 100 Plus or approved equal.
   H. Provide concrete with water soluble Chloride ion content level in hardening concrete not exceeding 0.06% by weight of cement as determined by AASHTO T260 Procedure Ä "Sampling and Testing for Chloride Ion in Concrete Materials." The use of calcium chlorides and other chloride containing agents is prohibited.

2. BASE PLATE GROUT:
   A. 8,000 psi minimum 28-day compressive strength, non-shrink.

3. STEEL REINFORCEMENT
   A. Reinforcement shall conform to the following standards:
      a. Deformed bars: ASTM A615 Grade 60
      b. Weldable deformed bars: ASTM A706
      c. Epoxy-coated steel reinforcement bars: ASTM A775
      d. Welded wire reinforcement (Use flat sheets only): ASTM A1064
      e. Epoxy-coated welded-wire reinforcement: ASTM A884
      f. Deformed bar anchors (DBA): D6L A706 weld stud by Nelson stud or approved equal
   B. Provide epoxy-coated steel reinforcement in all concrete retaining walls, footings, piers, pile caps, grade beams.
   C. Reinforcement in all architecturally exposed concrete shall not be expoxy coated.
   D. Do not tack or spot-weld crossing bars.
   E. Provide wire, precast, and/ or all-plastic bar supports systems where not specified on the drawings in accordance with CRSI Manual of Standard Practice.
      a. For a wire bar support system, use plastic tips when in contact with sides of formwork.
      b. All reinforcement in concrete elements supporting the Track Structure and all reinforcement in concrete elements that extend to grade (e.g. walls in the Station House) will be epoxy-coated.
   F. Rebar shop drawings shall be coordinated with embed plates and other embedded items, including embedded steel plates required in deferred submittals. Embedded items shall be shown on rebar shop drawings.

4. MINIMUM CONCRETE CLEAR COVER

A. Concrete placed against earth	3 in.
B. Slabs-on-grade, bottom	3 in.
C. Slabs-on-grade, top	2 in.
D. Formed concrete exposed to earth, water or weather	2 in.
E. Interior faces of walls, column, and piers	2 in.
F. Beams and girders, all around	1-1/2 in.
G. Slabs and joists, top	1-1/2 in.
H. Slabs and joists, bottom bars	1 in.

5. PLACEMENT
   A. Placement of aluminum items in, in contact with, or fastened to concrete is prohibited.
   B. Joints in structural framing members and walls are prohibited, unless otherwise noted in the structural construction documents
   C. Chamfer all exposed concrete corners, UON. See Architectural Drawings for locations.

6. POST-INSTALLED ANCHORS
   A. General
      a. Locate and mark existing reinforcement using non-destructive methods prior to installing anchors.
      b. Contractor shal not damage, mar, or cut existing reinforcement.
      c. Install post-installed anchors in accordance with manufacturer recommendations.
      d. Provide standard depth of embedment as listed by the manufacturer, UON.
      e. Provide stainless steel anchors and hardware at all exterior applications, UON.
   B. Expansion Anchors: Hilti Kwik Bolt TZ.
   C. Adhesive Anchors: Hilti HIT HY 200 MAX Injection Adhesive Anchors
      a. Do not use in an overhead application.
   D. Internally Threaded Drop-In Anchors: Hilti HDI
   E. Undercut Anchors: Hilti HDA Undercut Anchor
   F. Concrete Screws: Hilti KWIK HUS-EZ Screw Anchor
   G. Alternate equivalent post-installed anchors may be submitted to Commissioner for review and approval. Contractor shall provide calculations signed and sealed by a licensed structural engineer in the state of IL showing alternate anchor meets or exceeds the capacity the design anchor is capable, including concrete breakout.

7. EXISTING SURFACE TREATMENT
   A. Roughen all existing concrete surfaces common with new concrete to amplitude of 1/4 in. and conforming to Concrete Surface Profile 10 (CSP10) by the International Concrete Repair Institute (ICRI) Guideline No. 03732.
      a. Noted as "roughened concrete" in Structural Contract Documents.
      b. Existing concrete shall also be considered concrete on this job at construction joints or where a secondary pour is required.

8. HOUSEKEEPING PADS AND CURBS
   A. Pads and curbs may be shown on plan in certain instances for reference only. See Architectural and Mechanical drawings and specifications and coordinate with equipment manufacturer's requirements and location.
   B. Provide the same concrete as base slab, UON.

CAST-IN-PLACE CONCRETE WORK

9. STANDARD SPECIFICATIONS AND REFERENCED STANDARDS
   A. CRSI Manual of Standard Practice
   B. Follow the latest recommendations and specifications of the American Concrete Institute:
   C. ACI 301 Specifications for Structural Concrete
   D. ACI 302.1R Guide to Concrete Floor and Slab Construction
   E. ACI 304R Guide for Measuring, Mixing, Transporting, and Placing Concrete
   F. ACI 305.1 Specification for Hot Weather Concreting
   G. ACI 306.1 Specification for Cold Weather Concreting
   H. ACI 347 Guide to Formwork for Concrete

PLANT PRECAST CONCRETE

1. DESIGN STRENGTH:
   A. fc = 5,000 psi min.
   B. W/C (max.) = 0.40
   C. Air Content = 6% ± 1.5%

2. SCOPE
   A. Precast solid planks.
   B. Design Calculations: Performed by a specialty structural engineer (SSE) experienced in precast concrete design and registered in the State of Illinois.
   C. Refer to S41-40 for additional delegated design requirements.
   D. Precast shall meet all cast-in-place concrete mix design requirements, except where explicitly noted within the drawings and precast concrete specifications 03 41 00.

3. MATERIALS
   A. Reinforcing Materials:
      a. Epoxy-coated steel reinforcement bars: ASTM A775
   B. Concrete Materials:
      a. Portland Cement: ASTM C 150, Type I or III.
      b. Supplementary Cementitious Materials shall not be used in precast.
      c. Aggregates: ASTM C33 normal weight.
      d. Admixtures: Air entraining, Water reducing Retarding Water reducing and retarding Water reducing and accelerating High range, water reducing High range, water reducing and retarding Plasticizing and retarding, at precaster's discretion.
      e. Provide corrosion-inhibiting admixture min 2 gal/cyd.
      f. Provide silane based penetrating sealant on top surface and all sides.
      g. Provide shrinkage reduction admixture.
   C. Steel Connections: Hot-dip galvanized steel shapes, plates and headed studs.
      a. Finish: Painted except for field welded surfaces.
      b. Touch up field welded connections with zinc rich coating (cold galvanizing).
   D. Stainless-Steel Connections: Stainless steel plates, bolts, and headed studs as shown in the Drawings.
   E. Bearing Pads:
      a. Cotton-Duck-Fabric-Reinforced Elastomeric Pads: Preformed, horizontally layered cotton-duck fabric bonded to an elastomer.
         - Surface hardness of 80 to 100 Shore A durometer per ASTM D 2240
         - Tensile Strength: 5,000 psi (min.) per ASTM D412.
         - Compressive strength: 8,000 psi (min.)
         - Environmental: MIL-E-5272.
      b. Basis of Design: Fabreeka Bearing Pad with #700 epoxy adhesive.
   F. Grout: Sand-cement 4,000 psi compressive strength.
   G. Weld Plates:
      a. Where indicated, field welds are 1/4" fillet welds, minimum UON.
      b. Where planks bear on steel beams at both ends, place weld plates on one end of plank. Alternate location of weld plates.

4. SHOP DRAWINGS SUBMITTALS
   A. Erection Drawings
      a. Plans locating and defining all slab units furnished by the precaster, with all penetrations coordinated shown and located.
      b. Sections and details showing connections, edge conditions and support conditions of the hollow core slab units.
      c. All dead, live, and other applicable loads used in the design. See S00-03.
      d. Estimated cambers.
   B. Production Drawings
      a. Specialty design engineer calculations. Specialty engineer to account for reduced topping slab thickness due to camber if topping to be poured to level.
      b. Plan view of each hollow core slab unit type.
      c. Sections and details to indicate quantities, location, and type of reinforcing steel prestressing strands are not permitted.
      d. Lifting and erection inserts.
      e. Dimensions and finishes.
      f. Prestress for strand and concrete strength.
      g. Estimated camber at release.
      h. Method of transportation.

5. Standard Specifications:
   A. Design Standards: ACI 318 and PCI MNL 120.
   B. Quality-Control Standard: PCI MNL 116.

ARCHITECTURAL CONCRETE (ACON)

1. GENERAL
   A. See architectural drawings for locations of architectural concrete.
   B. Meet all the cast-in-place concrete mix design requirements, except where explicitly noted within the drawings and cast-in-place architectural concrete specification 03 33 00.

2. CONCRETE MIX PROPERTIES

	f'c (min)	W/C (max)	Air Content
A. Element			
a. Architecturally exposed walls	6,000 psi	0.45	6% +/- 1.5

   B. Shrinkage Reducing Admixtures
      a. Mix designs shall include shrinkage reducing admixtures.
   C. Corrosion Inhibitor
      a. Provide corrosion inhibitor in all exposed concrete surfaces, min. 2 gal / cyd.
   D. Supplementary Cementitious Materials (SCMs)
      a. SCMs are optional.
      b. Fly Ash: ASTM C618 Class C or F, shall not exceed 25% by weight of cementitious material. Fly ash for use in ACON shall be obtained from a single source.
      c. No other SCM permitted in ACON mix design.

3. MINIMUM CONCRETE CLEAR COVER
   A. Formed concrete exposed to earth, water or weather 2 in.

4. PLACEMENT
   A. All rebar accessories must be plastic or plastic tipped to not stain or rust.
   B. Formwork to be made with a HDO surface. Form releast agents must be applied to the forms.
   C. Concrete face forms must be erected after the rebar is installed.
   D. Through-wall ties, chamfers, and reveals must be coordinated with the Architectural Drawings.

WOOD FRAMING

1. SAWN LUMBER FOR NLT
   A. All lumber to be Douglas Fir (NLGA) No. 1 or better and kiln-dried, UON.
   B. Douglas Fir (DF) Structural Properties (Min.)
      a. Fb 1,000 psi
      b. Ft 675 psi
      c. Fc (perpendicular) 625 psi
      d. Fc (parallel) 1,500 psi
      e. Fv 180 psi
      f. E 1,700,000 psi
   C. Sill plates, sawn lumber members in contact with concrete or masonry, or sawn lumber noted as pressure-treated (PT) SHALL be Southern Pine (SPIB) No. 2 or better and pressure treated with 0.25 pcf ACQ-B or ACQ-D, waterborne preservative in accordance with federal specifications TT-W-571 and AWPA U1, T1, and P5
   D. Southern Pine (SP) Structural Properties (Min.)
      a. Ft 800 psi
      b. Fc (perpendicular) 565 psi
      c. Fc (parallel) 1,650 psi
      d. Fv 175 psi
      e. E 1,600,000 psi

2. PLYWOOD
   A. All plywood shall meet the following minimum standards UON.
   B. All plywood shall be graded and stamped in accordance with U.S. product standard PS 1-95.
   C. All plywood shall be manufactured using exterior glue.
   D. All plywood shall be continuous over (2) two or more spans and shall be installed with face grain of plywood perpendicular to supports with staggered joints.
   E. Install roof sheathing with 1/8" gap between panels to allow for expansion. Provide one panel edge clip per span.
   F. All plywood shall be tongue and groove panels
   G. All plywood shall be fire-retardant. Comply with the requirements of AWPA U1-15 AND T1-15 for exterior exposure.

Location	Thickness	Grade	Span Rating	Remarks
Roof	15/32 in.	CC Exterior	24/0	APA STRUC I Rated Sheathing

3. FASTENERS
   A. All metal fasteners in contact with pressure-treated wood shall be hot-dip galvanized or stainless steel.
   B. Nails: Common wire, hot-dip galvanized per ASTM A153, except bright ring shanked for attachment of subfloor plywood to floor joists.
   C. Bolts
      A. ASTM A307 for all wood-to-wood and light gage steel-to-wood connections.
      B. Bolt holes in wood shall be 1/32" larger than bolt diameter.
      C. Bolt heads and nuts shall bear on standard malleable iron (MI) washers or steel hardware.
      D. Carriage bolts require MI washers under the nuts only.
      E. Bolts in contact with pressure-treated members shall be stainless steel A316 or hot-dip galvanized (G185 per ASTM A653 or ASTM A153).
      F. All nuts shall be re-tightened at completion of job or just prior to finished construction.
   D. Partial Thread Self Tapping (PTST) Screws
      A. SDS Wood Screws by Simpson Strong-tie or approved equal.
      B. Lead holes shall be pre-bored and shall have a diameter of 70% of the root diameter of the screw.
      C. Screws shall be screwed into place, not driven into place.
   E. Lag Screw Installation
      A. ANSI/ASME B18.6.1 for all wood-to-wood and wood-to steel connections
      B. Drill clearance holes for lag screws to depth equal to length of the unthreaded shank portion.
      C. Lead holes for threaded portion shall be 60% of the diameter of the unthreaded shank (clearance hole).
      D. Always drill clearance hole to proper depth before drilling lead hole.
      E. Turn lag screws into place; do not drive with a hammer.
   F. Construction Adhesive: Conform to APA AFH-01.

4. TYPICAL CONSTRUCTION NOTES
   A. Comply with all prescriptive requirements of the referenced building code, UON.
   B. All wood members in contact with concrete or masonry shall be pressure-treated.
   C. Set carpentry to required levels and line, with members plumb, true to line, cut, and fitted.
   D. Do not use defective or damaged materials such as cracked, split, warped, kinked, twisted, gouged, or dented framing. Do not use bent, cracked, or rusted connectors or fasteners.
   E. Do not field cut structural timber members for the work of other trades without the prior approval of the Commissioner.
   F. Clearance holes for bolts shall be a maximum of 1/16 in. greater than bolt diameter.
   G. Glue and nail new plywood roof sheathing with 10d nails @ 4" OC (4" OC along panel edges), UON. See diaphragm nailing patterns in typical details.
   H. Support NLT during shipment on non-staining material in same position as during storage.
   I. Transport and store NLT with adequate bracing, blocking, cribbing, and protect units to prevent contact with soil and separated with striping (so air may circulate around faces of members), to prevent staining, and to prevent cracking, distortion, warping or other physical damage.
   J. Place stored units so identification marks are clearly visible.
   K. Handle and transport units in a position consistent with their shape and design in order to avoid excessive stresses that would cause cracking or damage. Protect corners with wood blocking.
   L. Lift and support units only at designated points shown on Shop Drawings.
   M. Slit underside of temporary membrane covering during storage at Site. Do not deface members.
   N. Cover top and sides with opaque moisture resistant membrane.
   O. Protect NLT panels from damage, weather, and moisture during transportation, storage, and erection until the permanent roof construction (including weather barrier/memrane) is complete.
   P. Maintain a moisture content of 14% (+/-2%).
   Q. Panel surfaces to be in accordance with architectural requirements.

5. SHOP DRAWINGS AND SUBMITTALS
   A. Shop Drawings
      a. Indicate panel location plans, dimensions, shapes, sections, openings, support conditions, connections, lifting connections, temporary and permanent anchorage details, temporary and permanent anchorage locations, tolerances for fabrication and erection, opening locations, identification marks.
      b. Structural design calculations: provide structural design calculations demonstrating the NLT panels and their connection to the base building structure are adequate to resist the design loading as specified on the structural drawings. The NLT panels shall be designed to act be stamped and signed by a registered Structural Engineer licensed in the State of Illinois. It is noted that the material properties and details indicated on the structural drawings are representative of what is anticipated to meet the required performance.

6. STANDARD SPECIFICATIONS
   A. AF&PA NDS—National Design Specification for Wood Construction with Supplement, 2015.
   B. National Lumber Grades Authority (NLGA)
   C. Southern Forest Products Association (SFPA)
   D. FEDERAL SPECIFICATION: WOOD PRESERVATION: TREATING PRACTICES (GSA)
   E. American Wood Protection Association (AWPA)
   F. American Plywood Association (APA)

DESIGN BY:									
DRAWN BY:									
CHECKED BY:									
APPROVED BY:			01/27/2020	ISSUE FOR BID	EJT	MW	TRM		
CDOT/APPROVED BY:		NO.	DATE	REVISIONS	DES.	DRW.	CHK.	DCCO	CDOT

SIMPSON GUMPERTZ & HEGER
Engineering of Structures and Building Enclosures
Simpson Gumpertz & Heger Inc.
135 South LaSalle Street, Suite 3800
Chicago, Illinois 60603
main: 312.754.7500 fax: 312.754.7501
www.sgh.com

PERKINS+WILL
The Wrigley Building
410 North Michigan Ave.
Suite 1600
Chicago, IL 60611
t 312.755.0770
f 312.755.0775
www.perkinswill.com

CDOT
CHICAGO DEPARTMENT OF TRANSPORTATION
DIVISION OF ENGINEERING

154 N DAMEN AVE - DAMEN GREEN LINE STATION

STRUCTURAL GENERAL NOTES

CDOT PROJECT D-7-135 | DATE: 01/27/2020

SPEC. NO.

DRAWING NO. **S00-03**

REVISION NO.

DESIGN LOADS

1. DEAD LOADS:
   A. All permanent stationary construction including mechanical equipment and their weights.

2. LIVE LOADS (uniform/concentrated): No live load reductions were taken.
   A. Center Footwalks — 100 psf [CTA will post this load limit on the center footwalk]
   B. Glancing Blow to Platform Structure — 4 klf over 5 ft
   C. Roof and Drip pans on Track Structure — 30 psf
   D. Station Roof — 30 psf
   E. Equipment, Storage, machinery rooms — 200 psf
   F. Electrical rooms — 125 psf
   G. Pedestrian Areas on Platforms — 100 psf (and 3kip + 30 psf)
   H. Stairs and Exits — 100 psf
   I. Storage
      1. Heavy — 250 psf
      2. Light — 125 psf
   J. Fall protection on Canopy and Roof Structures — 5 kip (factored load in any direction)
   K. Glass Walkways (Canopy / Bridge roof) — 30 psf or 300 lbs over 2 in^2 area (ASTM E2751)
   L. Rapid Transit Cars and CTA Crane Train — See Train Loading Diagrams
   M. Accessible Ceilings — 200 lbf concentrated load
   N. Transit Load Combinations (Confirmed by CTA in meeting on 18 October 2018):
      1. Normal service rail car on both tracks traveling at the same time without live load on center footwalk. Allowable stresses per AREMA 2017 Chapter 15-1.
      2. CTA Crane Car on one track concurrent with a 100 psf center footwalk live load. Allowable stresses per AREMA 2017 Chapter 15-7.

3. GUARDRAILS
   A. At Platforms and Mezzanines Loads
      1. Simultaneous 50 plf vertical and 75 plf horizontal load at top of railing
      2. Simultaneous 200 lbs vertical and 300 lbs horizontal load at top of railing
   B. All other guardrails and handrails
      1. Simultaneous 50 plf vertical and 50 plf horizontal load at top of rail
      2. 200 lb in any direction on guardrail infill, applied over a 12"X12" area.

4. WIND LOADS
   A. Rapid Transit Structures with No Train (W)
   B. Lateral load applied to 1.5x vertical projection of element — 50 psf or 200 plf
      1. Longitudinal load — 25% of lateral load
      2. On columns and piers — 50 psf
   C. Rapid Transit Structure with Train (WL)
   D. On Train (applied at 6 ft above top of rail one track at a time) — 30 psf or 300 plf app
   E. Lateral load applied to 1.5x vertical projection of element — 30 psf or 200 plf
      1. Longitudinal load — 25% or lateral load
      2. On columns and piers — 30 psf
   F. Platform structure and platform canopies
      1. Lateral — 30 psf
      2. Uplift — 40 psf
   G. Buildings and Other Structures (per CBC and ASCE)
   H. Entrance building, pedestrian bridge, and stair/elevator structure not supported by track
      1. Lateral — 20 psf
      2. Uplift — 15 psf
   I. On Signage
      1. Open Signs — 40 psf on solid projected area
         A. Architectural stainless steel mesh infill assumed to be 85% (min) open.
      2. Solid Signs — 30 psf
   J. Components and cladding
      1. Other than corner — 25 psf
      2. Corner — 30 psf

5. ROOF SNOW LOAD
   A. Flat Canopies, roofs, and closed deck Aerial Track Structures — 30 psf
   B. Where appropriate, drifting snow loads have been considered in accordance with Section 13-52-280 of the Chicago Building Code.

6. IMPACT LOADS
   A. Rapid Transit Car on Superstructure: — 37.2% Rapid Transit Live Load
   B. Elevators: — 100% Increase for vertical elevator loads
   C. Vehicle Collision — 128 kips (30 mph impact) at top of pier (approx. 2'-3" ft above ground)

7. ROCKING LOADS
   A. Force equal to 10% of the rapid transit loading per track shall be applied downwards on one rail and upwards on the other, on all tracks

8. INERTIAL LOADS
   A. Platform canopy columns, posts, or other similar appurtenances, including their connections, are designed for inertial forces generated from the deceleration in either direction along a single track per CTA IDCM Section 7.3.14.
   B. Deceleration of Train on Single Track: 10 ft / sec^2
   C. Inertial Load Combinations: D + 0.7IF + W or D + 0.75(0.7IF) + 0.75L + 0.75W

9. LONGITUDINAL LOADS
   A. Apply load 8 ft above track and distribute over 1200 ft longitudinally
   B. 200 kip on one track and 100 kip for other track

10. LATERAL FORCES FROM EQUIPMENT
    A. Single moving concentrated lateral force equal to 1/4 of weight of the heaviest axle of the Train live load, without impact, applied at the base of rail in either direction and at any point along the span.
    B. 7.5 kips (1/4 of CTA Crane P_{C1})

11. EARTH PRESSURE PARAMETERS
    A. Lateral Equivalent Fluid Pressure:
       1. At-Rest Condition (Braced Walls), drained: 55 psf/foot of depth
       2. At-Rest Condition (Braced Walls), undrained: 90 psf/foot of depth

12. BELOW-GRADE STRUCTURES
    A. AASHTO HS-20 Vehicle loading

13. THERMAL FORCES FOR STRUCTURAL ELEMENTS GOVERNED BY AREMA
    A. Internal member stresses and movements considered per AREMA Table 8-2-3 for extreme climates .
       a. Temperature rise = 35° F
       b. Temperature fall = 45° F
       c. Temperature range = 80° F

14. THERMAL FORCES FOR STRUCTURAL ELEMENTS OTHER THAN THOSE GOVERNED BY AREMA
    a. Temperature differential =±140° F

15. GLANCING BLOW TO PLATFORM STRUCTURE
    A. 4,000 plf over a length of 5 ft orthogonal to the track direction.
    B. Load is not combined with other platform loads.

16. SEISMIC LOAD
    A. Seismic Design is not required in accordance with Section 13-52-340 of the Chicago Building Code

COMPONENTS & CLADDING (C&C) DESIGN LOADS

1. GENERAL:
   A. Engage a licensed structural engineer in the State of Illinois to design components & cladding as required in the contract documents.
   B. Components & Cladding include, but are not limited to, canopy glass panels, bridge glass panels, exterior wall glazing, and signage. See specifications for additional requirements.

2. WIND LOADS
   A. General — ±30 psf
   B. Open Signs — ±40 psf

3. ADDITIONAL REQUIREMENTS FOR EXTERIOR WALL GLAZING
   A. Temperature
      a. Accomodate 140° F annual uniform temperature change to the glass assembly and its boundary conditions.
      b. Accomodate temperature gradient patterns within ASTM E2431-12 Stnadard Practice for Determining the Reisstance of Single Glazed Annealed Architectural Flat Glass to Thermal Loads.
   B. Railing Load
      a. Simultaneous 50 plf vertical and 50 plf horizontal load in any direction applied at 3 ft - 6 in. above the floor elevation.
      b. Concentrated 200 lbf load in any direction applied at 3 ft - 6 in. above the floor elevation.
   C. Serviceability
      a. Maximum total load glass panel deflection = L/70
      b. Maximum total load edge deflection = L/175 or 3/4 in. overall maximum.
   D. Post-Breakage Analysis
      a. Railing load combination according to ASTM E2751.

4. ADDITIONAL REQUIREMENTS FOR CANOPY AND BRIDGE ROOF GLASS PANELS
   A. Snow Load — 30 psf
   B. Wind Uplift — 30 psf
   C. Live Load — 30 psf or 300 lbf concentrated load according to ASTM E2751
   D. Temperature
      a. Accomodate 140° F annual uniform temperature change to the glass assembly and its boundary conditions.
      b. Accomodate temperature gradient patterns within ASTM E2431-12 Stnadard Practice for Determining the Reisstance of Single Glazed Annealed Architectural Flat Glass to Thermal Loads.
   E. Serviceability
      a. Maximum live load glass panel defleciton = L/360 or 3/8".
      b. Maximum total load edge deflection = L/75 or 1/4" overall maximum.
   F. Post-Breakage Analysis
      a. Dead load + Live Load combination according to ASTM E2751.

5. MINIMUM GLASS DESIGN THICKNESS AS REQUIRED BY CITY OF CHICAGO DEPARTMENT OF BUILDING

Architectural Exterior Wall Type	Architectural Glass Label	Minimum Nominal Thickness
EWS-05	GL-05	16 mm FT +1.52mm SG + 16 mm FT
EWS-07B	GL-06	16 mm FT +1.52mm SG + 16 mm FT

   A. Additional Notes
      a. Alternate glass assembly thicknesses and materials are acceptable with Commissioner approval and a permit revision.
      b. Ceramic frit material is prohibited on glass
      c. Heat soak testing: All fully tempered (FT) glass shall be heat soak tested to convert Nickel Sulfide to the stable beta phase, in accordance with EN 14179-1:2016

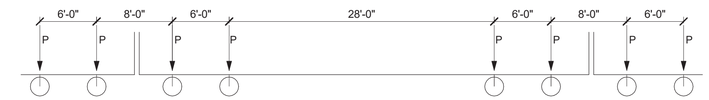

RAPID TRANSIT CAR VERTICAL AXLE LOADS

STRESS ANALYSIS
P = 26.5 KIP

DEFLECTION AND FATIGUE ANALYSIS
P = 21.4 KIP

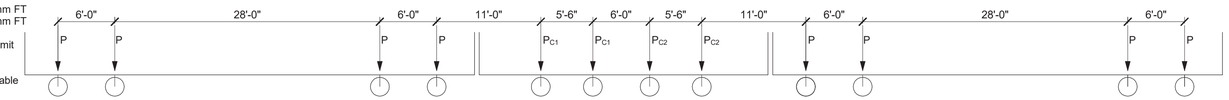

CTA CRANE TRAIN VERTICAL AXLE LOADS

STRESS ANALYSIS
P = 25 KIP
P_{C1} = 30 KIP
P_{C2} = 22 KIP

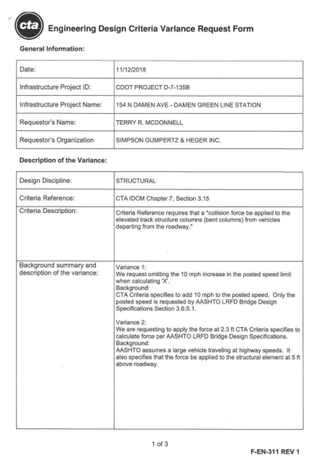

cta Engineering Design Criteria Variance Request Form

General Information:

Date:	11/12/2018
Infrastructure Project ID:	CDOT PROJECT D-7-135B
Infrastructure Project Name:	154 N DAMEN AVE - DAMEN GREEN LINE STATION
Requestor's Name:	TERRY R. MCDONNELL
Requestor's Organization	SIMPSON GUMPERTZ & HEGER INC.

Description of the Variance:

Design Discipline:	STRUCTURAL
Criteria Reference:	CTA IDCM Chapter 7, Section 3.15
Criteria Description:	Criteria Reference requires that a "collision force be applied to the elevated track structure columns (bent columns) from vehicles departing from the roadway."
Background summary and description of the variance:	Variance 1: We request omitting the 10 mph increase in the posted speed limit when calculating 'X'. Background: CTA Criteria specifies to add 10 mph to the posted speed. Only the posted speed is requested by AASHTO LRFD Bridge Design Specifications Section 3.6.5.1. Variance 2: We are requesting to apply the force at 2.3 ft CTA Criteria specifies to calculate force per AASHTO LRFD Bridge Design Specifications. Background: AASHTO assumes a large vehicle traveling at highway speeds. It also specifies that the force be applied to the structural element at 5 ft above roadway.

1 of 3 F-EN-311 REV 1

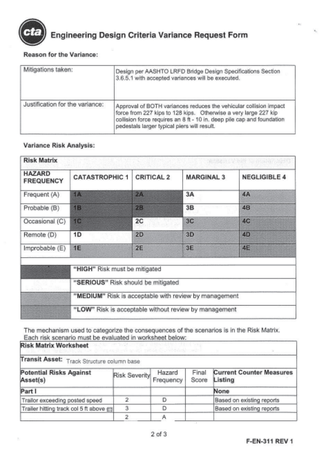

cta Engineering Design Criteria Variance Request Form

Reason for the Variance:

Mitigations taken:	Design per AASHTO LRFD Bridge Design Specifications Section 3.6.5.1 with accepted variances will be executed.
Justification for the variance:	Approval of BOTH variances reduces the vehicular collision impact force from 227 kips to 128 kips. Otherwise a very large 227 kip collision force requires an 8 ft - 10 in. deep pile cap and foundation pedestals larger typical piers will result.

Variance Risk Analysis:

Risk Matrix

HAZARD FREQUENCY	CATASTROPHIC 1	CRITICAL 2	MARGINAL 3	NEGLIGIBLE 4
Frequent (A)	1A	2A	3A	4A
Probable (B)	1B	2B	3B	4B
Occasional (C)	1C	2C	3C	4C
Remote (D)	1D	2D	3D	4D
Improbable (E)	1E	2E	3E	4E

	"HIGH" Risk must be mitigated
	"SERIOUS" Risk should be mitigated
	"MEDIUM" Risk is acceptable with review by management
	"LOW" Risk is acceptable without review by management

The mechanism used to categorize the consequences of the scenarios is in the Risk Matrix. Each risk scenario must be evaluated in worksheet below:

Risk Matrix Worksheet

Transit Asset: Track Structure column base

Potential Risks Against Asset(s)	Risk Severity	Hazard Frequency	Final Score	Current Counter Measures Listing
Part I				None
Trailor exceeding posted speed	2	D		Based on existing reports
Trailer hitting track cst 5 ft above gr	3	D		Based on existing reports
	2	A		

2 of 3 F-EN-311 REV 1

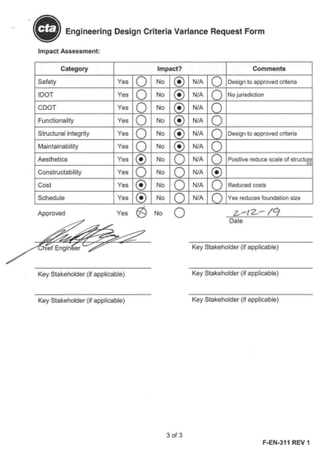

cta Engineering Design Criteria Variance Request Form

Impact Assessment:

Category	Impact?				Comments
Safety	Yes ( )	No (•)	N/A ( )		Design to approved criteria
IDOT	Yes ( )	No (•)	N/A ( )		No jurisdiction
CDOT	Yes ( )	No (•)	N/A ( )		
Functionality	Yes ( )	No (•)	N/A ( )		
Structural integrity	Yes ( )	No (•)	N/A ( )		Design to approved criteria
Maintainability	Yes ( )	No (•)	N/A ( )		
Aesthetics	Yes (•)	No ( )	N/A ( )		Positive reduce scale of structure
Constructability	Yes ( )	No ( )	N/A (•)		
Cost	Yes (•)	No ( )	N/A ( )		Reduced costs
Schedule	Yes (•)	No ( )	N/A ( )		Yes reduces foundation size

Approved Yes (X) No ( ) 2-12-19 Date

Chief Engineer — Key Stakeholder (if applicable)
Key Stakeholder (if applicable) — Key Stakeholder (if applicable)
Key Stakeholder (if applicable) — Key Stakeholder (if applicable)

3 of 3 F-EN-311 REV 1

DESIGN BY:									
DRAWN BY:									
CHECKED BY:									
APPROVED BY:			01/27/2020	ISSUE FOR BID	EJT	MW	TRM		
CDOT/APPROVED BY:		NO.	DATE	REVISIONS	DES.	DRW.	CHK.	DCCO	CDOT

SIMPSON GUMPERTZ & HEGER
Engineering of Structures and Building Enclosures
Simpson Gumpertz & Heger Inc.
135 South LaSalle Street, Suite 3800
Chicago, Illinois 60603
main: 312.754.7500 fax: 312.754.7501
www.sgh.com

PERKINS+WILL
The Wrigley Building
410 North Michigan Ave.
Suite 1600
Chicago, IL 60611
t 312.755.0770
f 312.755.0775
www.perkinswill.com

CDOT
CHICAGO DEPARTMENT OF TRANSPORTATION
DIVISION OF ENGINEERING

154 N DAMEN AVE - DAMEN GREEN LINE STATION

STRUCTURAL GENERAL NOTES

CDOT PROJECT D-7-135 | DATE: 01/27/2020

SPEC. NO.
DRAWING NO. S00-04
REVISION NO.

GENERAL DESIGN NOTES

1. SEE KEY PLAN FOR BENT GIRDER AND COLUMN LOCATION.
2. (N) AND (S) INDICATE 'NORTH' AND 'SOUTH' COLUMNS, RESPECTIVELY.
3. STRESS ANALYSIS BASED ON TWO NORMAL SERVICE AXLE LOADS PER IDCM CHAPTER 7 FIGURE 7-1.
4. MAX RATING ANALYSIS BASED ON ONE CRANE CAR PER IDCM CHAPTER 7 FIGURE 7-2 AND 100 PSF CENTER FOOTWALK LIVE LOAD.
5. FATIGUE ANALYSIS BASED ON TWO FATIGUE ANALYSIS AXLE LOADS PER IDCM CHAPTER 7 FIGURE 7-1.
6. MAXIMUM RATING ALLOWABLE STRESSES PER AREMA TABLE 15-7-2.

COLUMN DESIGN NOTES

1. A: COLUMN GROSS SECTIONAL AREA.
2. $I_{s\,1\text{-}1}, S_{s\,1\text{-}1}$: STRONG AXIS MOMENT OF INERTIA AND SECTION MODULUS OF THE STEEL COLUMN.
3. $I_{s\,1\text{-}1}, S_{s\,1\text{-}1}$: STRONG AXIS MOMENT OF INERTIA AND SECTION MODULUS OF THE STEEL COLUMN.
4.
5. k_1L_1/r_1, k_2L_2/r_2: RATIOS OF THE EFFECTIVE LENGTH IN INCHES TO THE RADIUS OF GYRATION IN INCHES OF THE COMPRESSION MEMBER ABOUT STRONG AND WEAK AXIS, RESPECTIVELY.
6. CONTROLLING LOAD CASE: THE CONTROLLING LOAD CASE PER CTA IDCM CHAPTER 7 SECTION 13.2 THAT GOVERNS THE STEEL COLUMN DESIGN.
7. P: CALCULATED AXIAL FORCE
8. f_a: CALCULATED AXIAL STRESS (P/A)
9. F_a: AXIAL STRESS THAT WOULD BE PERMITTED IF AXIAL FORCE ALONE EXISTED.
10. $M_{1\text{-}1}, M_{2\text{-}2}$: CALCULATED BENDING MOMENT ABOUT STRONG AND WEAK AXIS, RESPECTIVELY.
11. f_{b1}, f_{b2}: CALCULATED COMPRESSIVE BENDING STRESS ABOUT STRONG AND WEAK AXIS, RESPECTIVELY, AT THE POINT UNDER CONSIDERATION. ($M_{1\text{-}1}/S_{1\text{-}1}, M_{2\text{-}2}/S_{2\text{-}2}$)
12. F_{b1}, F_{b2}: COMPRESSIVE BENDING STRESS ABOUT STRONG AND WEAK AXIS, RESPECTIVELY, THAT WOULD BE PERMITTED IF BENDING ALONE EXISTED.
13. f_a / F_a: AXIAL COMPRESSION UTILIZATION RATIO.
14. ALLOWABLE STRESS FACTOR: ALLOWABLE OVERSTRESS FACTOR BASED UPON LOAD CASES (AS DEFINED IN CTA IDCM CHAPTER 7 SECTION 13.2).
15. RATIO: AXIAL AND BENDING COMPRESSION STRESS INTERACTION UTILIZATION RATIO AS CALCULATED BELOW:

WHEN $f_a / F_a \le 0.15$

$$f_a/F_a + f_{b1}/F_{b1} + f_{b2}/F_{b2}$$

WHEN $f_a / F_a > 0.15$

$$f_a/F_a + \frac{f_{b1}}{F_{b1}[1 - (f_a/0.514\pi^2E)(k_1L_1/r_1)]} + \frac{f_{b2}}{F_{b2}[1 - (f_a/0.514\pi^2E)(k_2L_2/r_2)]}$$

TRACK STRUCTURE COLUMN DESIGN OR MAXIMUM RATING DATA TABLE

NOMENCLATURE	BENT 2218		BENT 2219		BENT 2222		BENT 2223		BENT 2224		BENT 2225		BENT 2226		BENT 2227		BENT 2228	
	(S)	(N)	(S)	(N)	(S)	(N)	(S)	(N)	(S)	(N)	(S)	(N)	(S)	(N)	(S)	(N)	(S)	(N)
STRESS/MAXIMUM RATING INTERACTION AND FATIGUE ANALYSIS																		
A (in^2)	117	117	117	117	117	117	117	117	117	117	117	117	117	117	117	117	117	117
$I_{s\,1\text{-}1}$ (in^4)	6,000	6,000	6,000	6,000	6,000	6,000	6,000	6,000	6,000	6,000	6,000	6,000	6,000	6,000	6,000	6,000	6,000	6,000
$S_{s\,1\text{-}1}$ (in^3)	656	656	656	656	656	656	656	656	656	656	656	656	656	656	656	656	656	656
$I_{s\,2\text{-}2}$ (in^4)	2,170	2,170	2,170	2,170	2,170	2,170	2,170	2,170	2,170	2,170	2,170	2,170	2,170	2,170	2,170	2,170	2,170	2,170
$S_{s\,2\text{-}2}$ (in^3)	262	262	262	262	262	262	262	262	262	262	262	262	262	262	262	262	262	262
k_1L_1/r_1	15	15	15	15	15	15	15	15	15	15	15	15	15	15	15	15	15	15
k_2L_2/r_2	50	50	50	50	50	50	50	50	50	50	50	50	50	50	50	50	50	50
CONTROLLING LOAD CASE	LC3	LC3	LC3	LC3	LC3	LC3	LC3	LC3	LC3	LC3	LC3	LC3	LC3	LC3	LC3	LC3	LC3	LC3
P (kips)	302	302	354	354	355	356	317	333	334	337	357	358	357	357	395	393	359	361
f_a (ksi)	2.6	2.6	3.0	3.0	3.0	3.0	2.7	2.8	2.9	2.9	3.1	3.1	3.1	3.1	3.4	3.4	3.1	3.1
F_a (ksi)	21.7	21.7	21.7	21.7	21.7	21.7	21.7	21.7	21.7	21.7	21.7	21.7	21.7	21.7	21.7	21.7	21.7	21.7
$M_{1\text{-}1}$ (k-ft)	638	636	678	675	719	720	703	700	710	717	749	754	766	765	773	746	637	659
f_{b1} (ksi)	11.7	11.6	12.4	12.3	13.1	13.2	12.9	12.8	13.0	13.1	13.7	13.8	14.0	14.0	14.1	13.6	11.7	12.1
F_{b1} (ksi)	27.5	27.5	27.5	27.5	27.5	27.5	27.5	27.5	27.5	27.5	27.5	27.5	27.5	27.5	27.5	27.5	27.5	27.5
$M_{2\text{-}2}$ (k-ft)	263	274	78	74	68	72	104	109	135	141	288	284	246	243	249	257	252	271
f_{b2} (ksi)	12.0	12.6	3.6	3.4	3.1	3.3	4.8	5.0	6.2	6.4	13.2	13.0	11.3	11.1	11.4	11.8	11.5	12.4
F_{b2} (ksi)	27.5	27.5	27.5	27.5	27.5	27.5	27.5	27.5	27.5	27.5	27.5	27.5	27.5	27.5	27.5	27.5	27.5	27.5
f_a/F_a	0.12	0.12	0.14	0.14	0.14	0.14	0.12	0.13	0.13	0.13	0.14	0.14	0.14	0.14	0.16	0.15	0.14	0.14
ALLOWABLE STRESS FACTOR	1.25	1.25	1.25	1.25	1.25	1.25	1.25	1.25	1.25	1.25	1.25	1.25	1.25	1.25	1.25	1.25	1.25	1.25
RATIO	0.98	1.00	0.72	0.71	0.73	0.74	0.77	0.78	0.83	0.84	1.12	1.12	1.06	1.05	1.11	1.11	0.98	1.03
CONTROLLING LOAD CASE	LC3	LC3	LC3	LC3	LC3	LC3	LC3	LC3	LC3	LC3	LC3	LC3	LC3	LC3	LC3	LC3	LC3	LC3
P (kips)**	299	251	353	307	352	305	314	283	332	287	354	306	354	306	392	342	356	310
f_a (ksi)**	2.6	2.1	3.0	2.6	3.0	2.6	2.7	2.4	2.8	2.5	3.0	2.6	3.0	2.6	3.4	2.9	3.0	2.6
F_a (ksi)**	31.6	31.6	31.6	31.6	31.6	31.6	31.6	31.6	31.6	31.6	31.6	31.6	31.6	31.6	31.6	31.6	31.6	31.6
$M_{1\text{-}1}$ (k-ft)**	604	596	649	632	681	678	668	660	676	678	712	713	728	723	736	706	601	620
f_{b1} (ksi)**	11.1	10.9	11.9	11.6	12.5	12.4	12.2	12.1	12.4	12.4	13.0	13.0	13.3	13.2	13.5	12.9	11.0	11.3
F_{b1} (ksi)**	40.0	40.0	40.0	40.0	40.0	40.0	40.0	40.0	40.0	40.0	40.0	40.0	40.0	40.0	40.0	40.0	40.0	40.0
$M_{2\text{-}2}$ (k-ft)**	261	274	77	71	67	72	103	108	134	140	287	283	246	243	249	256	251	271
f_{b2} (ksi)**	12.0	12.5	3.5	3.3	3.1	3.3	4.7	5.0	6.2	6.4	13.2	13.0	11.3	11.1	11.4	11.7	11.5	12.4
F_{b2} (ksi)**	40.0	40.0	40.0	40.0	40.0	40.0	40.0	40.0	40.0	40.0	40.0	40.0	40.0	40.0	40.0	40.0	40.0	40.0
f_a/F_a**	0.08	0.07	0.10	0.08	0.10	0.08	0.09	0.08	0.09	0.08	0.10	0.08	0.10	0.08	0.11	0.09	0.10	0.08
ALLOWABLE STRESS FACTOR	1.25	1.25	1.25	1.25	1.25	1.25	1.25	1.25	1.25	1.25	1.25	1.25	1.25	1.25	1.25	1.25	1.25	1.25
RATIO**	0.66	0.65	0.48	0.45	0.48	0.47	0.51	0.50	0.55	0.55	0.75	0.73	0.71	0.69	0.73	0.71	0.66	0.68
FATIGUE CATEGORY ($S_{R/F\text{-}st}$)	C (10 ksi)	C (10 ksi)	C (10 ksi)	C (10 ksi)	C (10 ksi)	C (10 ksi)	C (10 ksi)	C (10 ksi)	C (10 ksi)	C (10 ksi)	C (10 ksi)	C (10 ksi)	C (10 ksi)	C (10 ksi)	C (10 ksi)	C (10 ksi)	C (10 ksi)	C (10 ksi)
f_r RANGE (ksi)	1.18	1.18	1.11	1.12	1.20	1.20	1.15	1.16	1.15	1.15	1.20	1.20	1.20	1.20	1.19	1.19	1.19	1.19

** ITEM IS FOR MAXIMUM RATING COLUMN INTERACTION ANALYSIS

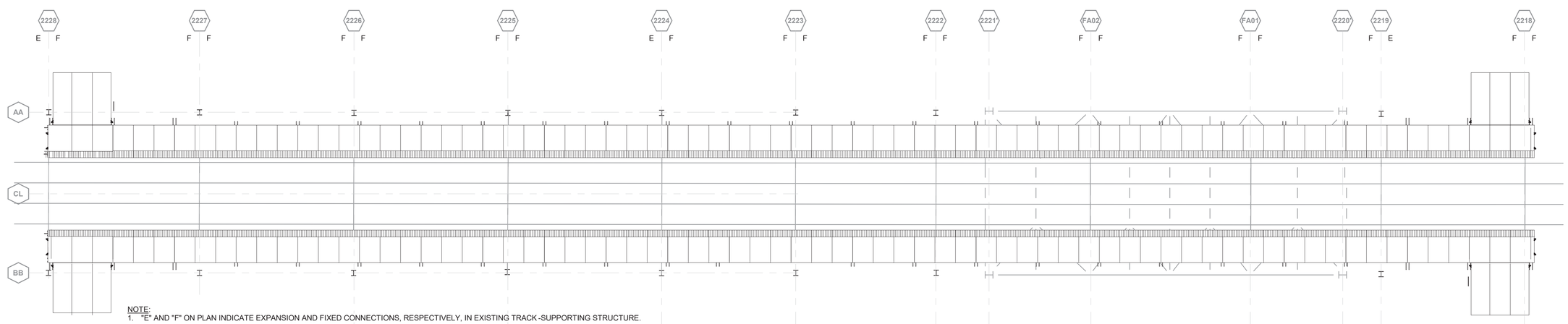

NOTE:
1. "E" AND "F" ON PLAN INDICATE EXPANSION AND FIXED CONNECTIONS, RESPECTIVELY, IN EXISTING TRACK-SUPPORTING STRUCTURE.

1 KEY PLAN
1/16" = 1'-0"

DESIGN BY:									
DRAWN BY:									
CHECKED BY:									
APPROVED BY:			01/27/2020	ISSUE FOR BID	EJT	MW	TRM		
CDOT/APPROVED BY:		NO.	DATE	REVISIONS	DES.	DRW.	CHK.	DCCO	CDOT

SIMPSON GUMPERTZ & HEGER
Engineering of Structures and Building Enclosures
Simpson Gumpertz & Heger Inc.
135 South LaSalle Street, Suite 3800
Chicago, Illinois 60603
main: 312.754.7500 fax: 312.754.7501
www.sgh.com

PERKINS+WILL
The Wrigley Building
410 North Michigan Ave.
Suite 1600
Chicago, IL 60611
t 312.755.0770
f 312.755.0775
www.perkinswill.com

CDOT
CHICAGO DEPARTMENT OF TRANSPORTATION
DIVISION OF ENGINEERING

154 N DAMEN AVE - DAMEN GREEN LINE STATION

DESIGN DATA - COLUMNS

CDOT PROJECT D-7-135 | DATE: 01/27/2020

SPEC. NO.

DRAWING NO. S00-06a

REVISION NO.

GENERAL DESIGN NOTES

1. SEE KEY PLAN FOR BENT GIRDER AND COLUMN LOCATION.
2. (N) AND (S) INDICATE 'NORTH' AND 'SOUTH' COLUMNS, RESPECTIVELY.
3. STRESS ANALYSIS BASED ON TWO NORMAL SERVICE AXLE LOADS PER IDCM CHAPTER 7 FIGURE 7-1.
4. MAX RATING ANALYSIS BASED ON ONE CRANE CAR PER IDCM CHAPTER 7 FIGURE 7-2 AND 100 PSF CENTER FOOTWALK LIVE LOAD.
5. FATIGUE ANALYSIS BASED ON TWO FATIGUE ANALYSIS AXLE LOADS PER IDCM CHAPTER 7 FIGURE 7-1.
6. MAXIMUM RATING ALLOWABLE STRESSES PER AREMA TABLE 15-7-2.

BENT GIRDER DESIGN NOTES

1. FCM OR NTR: ALL BENT GIRDERS ARE FCM.
2. I_s,S_s: MOMENT OF INERTIA AND SECTION MODULUS OF THE STEEL SECTION USED FOR COMPUTING f_s DUE TO DEAD AND LIVE LOADS.
3. D.L.: DEAD LOAD.
4. $M_{D.L.}$: MOMENT DUE TO DEAD LOAD.
5. +/- $M_{L.L.+IM}$: LIVE LOAD MOMENT PLUS IMPACT LOAD INCLUDING ROCKING EFFECT, RE PER IDCM FIGURE 7-1 FOR STRESS AND NORMAL RATING ANALYSIS.
6. $f_{sD.L.}$: STRESS IN EXTREME FIBERS OF FLANGE FOR CONTROLLING STEEL FLANGE DUE TO DEAD LOADS ($M_{D.L.}$ / S_s).
7. $f_{sL.L.+IM}$: STRESS IN EXTREME FIBERS OF FLANGE FOR CONTROLLIGN STEEL FLANGE DUE TO VERTICAL LIVE LOAD PLUS IMPACT LOAD INCLUDING ROCKING EFFECT ($M_{L.L.+IM}$ / S_S).
8. f_{sTotal}: SUM OF STRESSES ($f_{sD.L.}$ + $f_{sL.L.+IM}$).
9. f_s ALLOWABLE: BASIC ALLOWABLE STRESS
10. FATIGUE CATEGORY AND S_{RFAT}: DESIGN FATIGUE CATEGORY AND THRESHOLD STRESS BASED UPON THE CONTROLLING FATIGUE SENSITIVE DETAIL PER AREMA TABLE 15-1-9.
11. f_s RANGE: STRESS RANGE DEFINED AS THE DIFFERENCE BETWEEN THE MAXIMUM AND MINIMUM CALCULATED STRESS DUE TO LIVE LOAD PLUS IMPACT LOAD INCLUDING ROCKING EFFECT, RE, PER IDCM CHAPTER 7 FIGURE 7-1 FOR FATIGUE.
12. $+M_{CRANE\ L.L.+IM}$: LIVE LOAD MOMENT PLUS IMPACT LOAD FOR A SINGLE CTA CRANE AXLE LOADING PER FIGURE 7-2 AND 100 PSF CENTER FOOTWALK LIVE LOAD FOR MAXIMUM RATING ANALYSIS.
13. $f_{SCRANE\ L.L.+IM}$: STRESS IN EXTREME FIBERS OF FLANGE FOR CONTROLLING STEEL FLANGE DUE TO VERTICAL LIVE LOAD PLUS IMPACT LOADS FO RMAXIMUM RATING ANALYSIS ($M_{CRANE\ L.L.+IM}$ /S_S).
14. f_s RATING: ALLOWABLE STRESS FOR MAXIMUM RATING
15. MAXIMUM RATING: MAXIMUM RATING AS CALCULATED BELOW:

$(f_S\ RATING - f_{sD.L.}) / (f_{s\ CRANE\ L.L.+IM}) \geq 1.0$

TRACK STRUCTURE BENT GIRDER DESIGN VALUES TABLE

NOMENCLATURE	2218	2219	2222	2223	2224	2225	2226	2227	2228
	Mid-Span	Mid-Span	Mid-Span	Mid-Span	Mid-Span	Mid-Span	Mid-Span	Mid-Span	Mid-Span
STRESS/FATIGUE ANALYSIS									
FCM OR NTR	FCM	FCM	FCM	FCM	FCM	FCM	FCM	FCM	FCM
I_S (in^4)	134,367	126,798	134,367	126,798	134,367	134,367	134,367	134,367	134,367
S_s (in^3)	3,530	3,348	3,530	3,348	3,530	3,530	3,530	3,530	3,530
D.L. (k/ft)*	SEE FOOTNOTE								
M.D.L. (k/ft)	1,020	1,270	1,330	1,230	1,220	1,300	1,360	1,270	970
$+M_{L.L.}$ + IM. (k-ft)	2,370	2,420	2,700	2,530	2,520	2,700	2,740	2,620	2,350
$-M_{L.L.}$ + IM. (k-ft)	0	0	0	0	0	0	0	0	0
$f_{s\ D.L.}$ (ksi)	3.47	4.55	4.52	4.41	4.15	4.42	4.62	4.32	3.30
$f_{s\ L.L.}$ + IM. (ksi)	8.06	8.67	9.18	9.07	8.57	9.18	9.31	8.91	7.99
f_s TOTAL (ksi)	11.52	13.23	13.70	13.48	12.71	13.60	13.94	13.22	11.29
f_s ALLOWABLE (ksi)	15.81	15.80	15.81	15.80	15.81	15.81	15.81	15.81	15.81
FATIGUE CATEGORY (S_{Rfat})	D (7 ksi)	D (7 ksi)	D (7 ksi)	D (7 ksi)	D (7 ksi)	D (7 ksi)	D (7 ksi)	D (7 ksi)	D (7 ksi)
f_s RANGE (ksi)	6.08	5.95	6.32	6.24	5.81	6.29	6.25	6.22	6.22
$+M_{Crane\ L.L.}$ + IM. (k-ft)	1,940	1,850	1,960	1,890	1,860	1,960	1,960	1,950	1,960
$-M_{Crane\ L.L.}$ + IM. (k-ft)	0	0	0	0	0	0	0	0	0
$f_{s\ Crane\ L.L.}$ + IM. (k-ft)	6.59	6.63	6.66	6.77	6.32	6.66	6.66	6.63	6.66
f_s RATING (ksi)	23.2	23.2	23.2	23.2	23.2	23.2	23.2	23.2	23.2
MAXIMUM RATING	3.0	2.8	2.8	2.8	3.0	2.8	2.8	2.8	3.0

* LOADS SHOWN IN THE TABLE ABOVE ARE TRANSFERRED TO THE GIRDER FROM THE TRACK STRINGERS

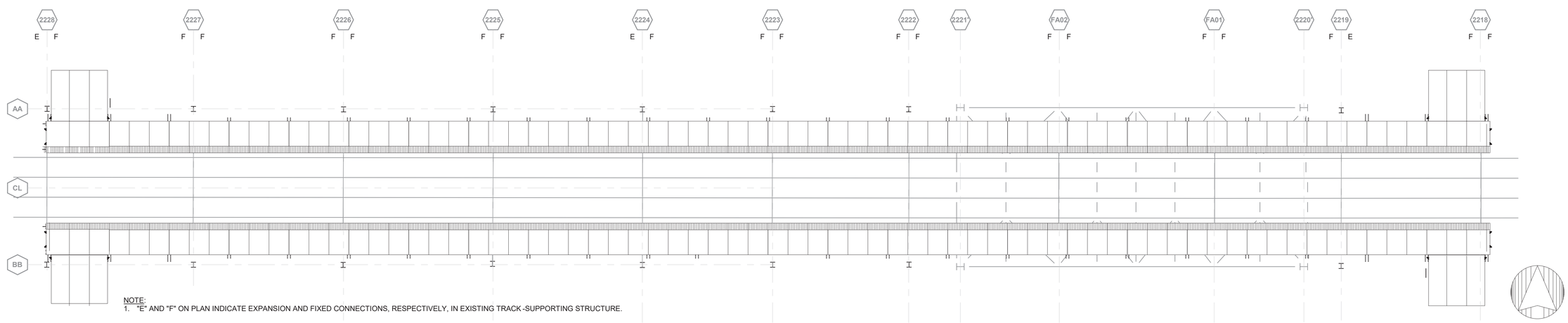

NOTE:
1. "E" AND "F" ON PLAN INDICATE EXPANSION AND FIXED CONNECTIONS, RESPECTIVELY, IN EXISTING TRACK -SUPPORTING STRUCTURE.

1 KEY PLAN
1/16" = 1'-0"

DESIGN BY:								
DRAWN BY:								
CHECKED BY:								
APPROVED BY:			01/27/2020	ISSUE FOR BID	EJT	MW	TRM	
CDOT/APPROVED BY:		NO.	DATE	REVISIONS	DES.	DRW.	CHK.	DCCO	CDOT

SIMPSON GUMPERTZ & HEGER
Engineering of Structures and Building Enclosures
Simpson Gumpertz & Heger Inc.
135 South LaSalle Street, Suite 3800
Chicago, Illinois 60603
main: 312.754.7500 fax: 312.754.7501
www.sgh.com

PERKINS+WILL
The Wrigley Building
410 North Michigan Ave.
Suite 1600
Chicago, IL 60611
t 312.755.0770
f 312.755.0775
www.perkinswill.com

CDOT
CHICAGO DEPARTMENT OF TRANSPORTATION
DIVISION OF ENGINEERING

154 N DAMEN AVE - DAMEN GREEN LINE STATION

DESIGN DATA - BENT GIRDERS

CDOT PROJECT D-7-135 | DATE: 01/27/2020

SPEC. NO.

DRAWING NO. **S00-06b**

REVISION NO.

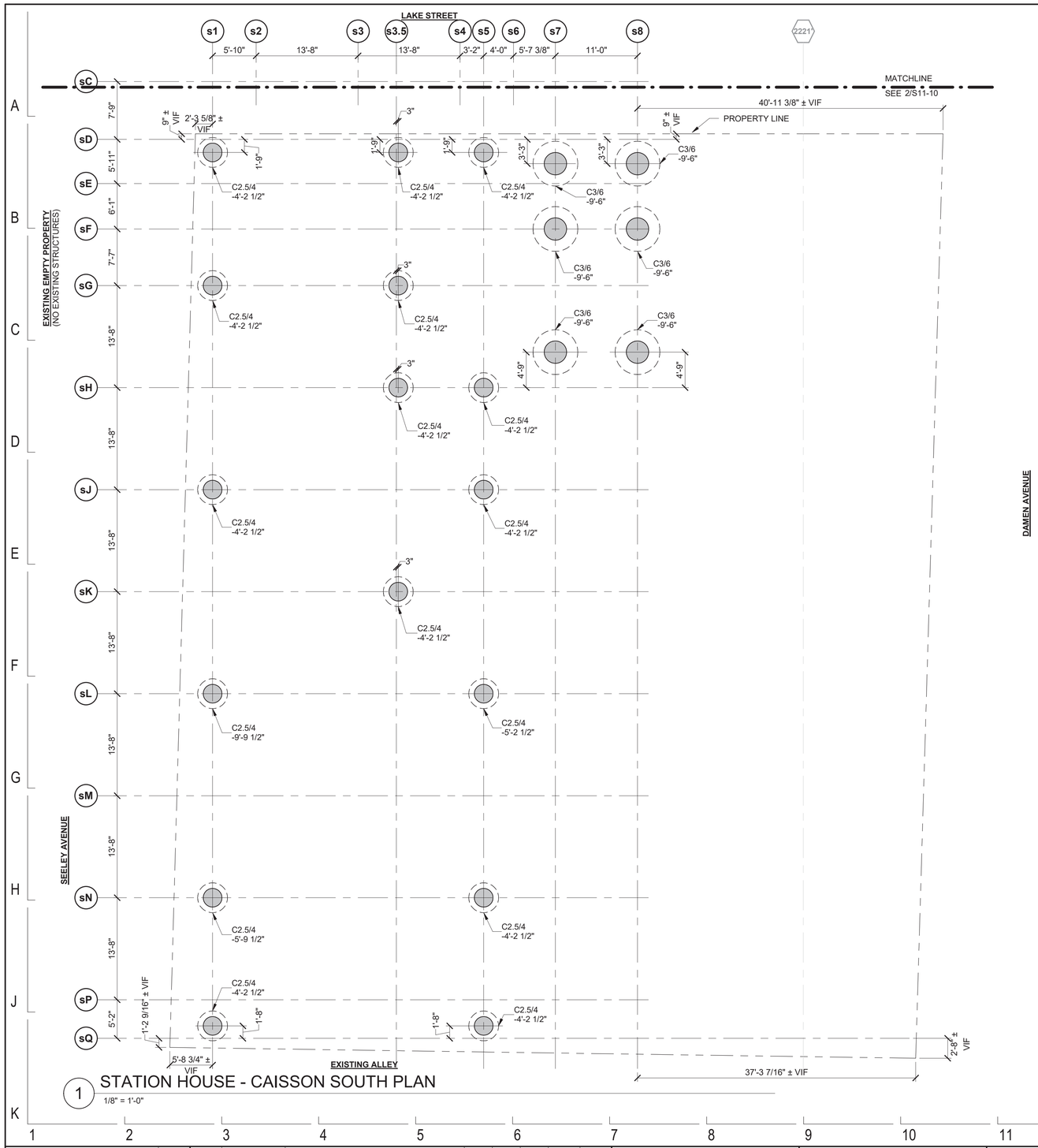

1 STATION HOUSE - CAISSON SOUTH PLAN

1/8" = 1'-0"

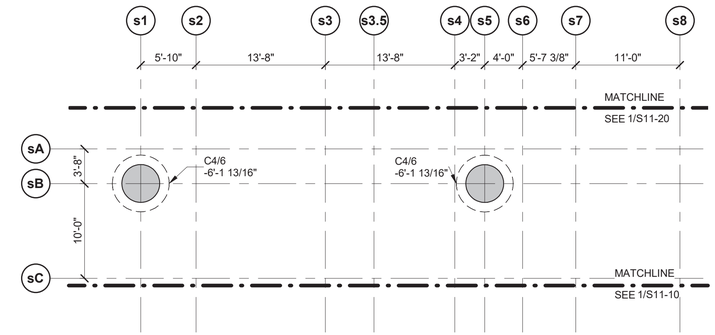

2 STATION HOUSE - CAISSON NORTH PLAN

1/8" = 1'-0"

CAISSON PLAN NOTES:

1. SEE TYPICAL CAISSON DETAILS AND SCHEDULE FOR ADDITIONAL INFORMATION.
2. BOTTOM ELEVATIONS OF CAISSON BELLS MUST BE VERIFIED BY THE COMMISSIONER'S TESTING AGENCY AND MAY VARY ACCORDING TO SITE CONDITIONS.
3. EACH CAISSON SHAFT AND BELL SHALL BE INSPECTED AND APPROVED BY THE COMMISSIONER'S TESTING AGENCY BEFORE PLACEMENT OF CONCRETE MAY BEGIN.
4. THE CONTRACTOR SHALL EXAMINE THE GEOTECHNICAL REPORT PRIOR TO CAISSON CONSTRUCTION.
5. CAISSON SHAFTS SHALL HAVE PERMANENT CORRUGATED STEEL LINERS AND TEMPORARY STEEL CASINGS AS RECOMMENDED BY THE GEOTECHNICAL ENGINEERING REPORT. THE CAISSON CONTRACTOR SHALL PROVIDE ADEQUATE CASING WALL THICKNESS TO SAFELY SUPPORT ALL SOIL AND TEMPORARY CONSTRUCTION LOADS.
6. A SURVEY CERTIFIED BY A PROFESSIONAL SURVEYOR LICENSED IN THE STATE OF ILLINOIS INDICATING THE LOCATIONS OF INSTALLED CAISSONS SHALL BE SUBMITTED BY THE CAISSON CONTRACTOR FOR REVIEW PRIOR TO SUBSEQUENT CONSTRUCTION OF CAISSON CAPS, MATS, ETC.
7. THE BELLED PORTION SHALL BE INSPECTED USING A DOWN-THE-HOLE CAMERA TO EXAMINE CAISSON BOTTOM PRIOR TO PLACING CONCRETE AS RECOMMENDED IN THE GEOTECHNICAL REPORT.
8. CAISSONS ARE LOCATED ON PROJECT GRIDLINE UON.

CAISSON LEGEND

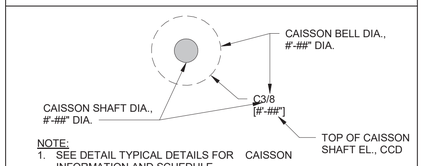

NOTE:
1. SEE DETAIL TYPICAL DETAILS FOR CAISSON INFORMATION AND SCHEDULE
2. ALL CAISSON DIMENSIONS ARE ACTUAL MIN. DESIGN DIMENSIONS

CAISSON SCHEDULE (f'c = 6,000 psi) S30-01

TYPE	SHAFT DIAMETER	BELL DIAMETER	'A' BARS: VERT. REINF. NO. & SIZE	VERT. REINF. LENGTH	'B' BARS: TIES SPACING	REMARKS
C2.5/4	2'-6"	4'-0"	(12) #7	FULL LENGTH	#4@12"	
C3/6	3'-0"	6'-0"	(14) #8	FULL LENGTH	#4@12"	
C4/6	4'-0"	6'-0"	(16) #10	FULL LENGTH	#4@12"	

DESIGN BY:								
DRAWN BY:								
CHECKED BY:								
APPROVED BY:			01/27/2020	ISSUE FOR BID	EJT	MW	TRM	
CDOT/APPROVED BY:		NO.	DATE	REVISIONS	DES.	DRW.	CHK.	DCCO CDOT

SIMPSON GUMPERTZ & HEGER
Engineering of Structures and Building Enclosures
Simpson Gumpertz & Heger Inc.
135 South LaSalle Street, Suite 3800
Chicago, Illinois 60603
main: 312.754.7500 fax: 312.754.7501
www.sgh.com

PERKINS+WILL
The Wrigley Building
410 North Michigan Ave.
Suite 1600
Chicago, IL 60611
t 312.755.0770
f 312.755.0775
www.perkinswill.com

CDOT
CHICAGO DEPARTMENT OF TRANSPORTATION
DIVISION OF ENGINEERING

154 N DAMEN AVE - DAMEN GREEN LINE STATION

STATION HOUSE - CAISSON PLAN

CDOT PROJECT D-7-135 DATE: 01/27/2020

SPEC. NO.

DRAWING NO. **S11-10**

REVISION NO.

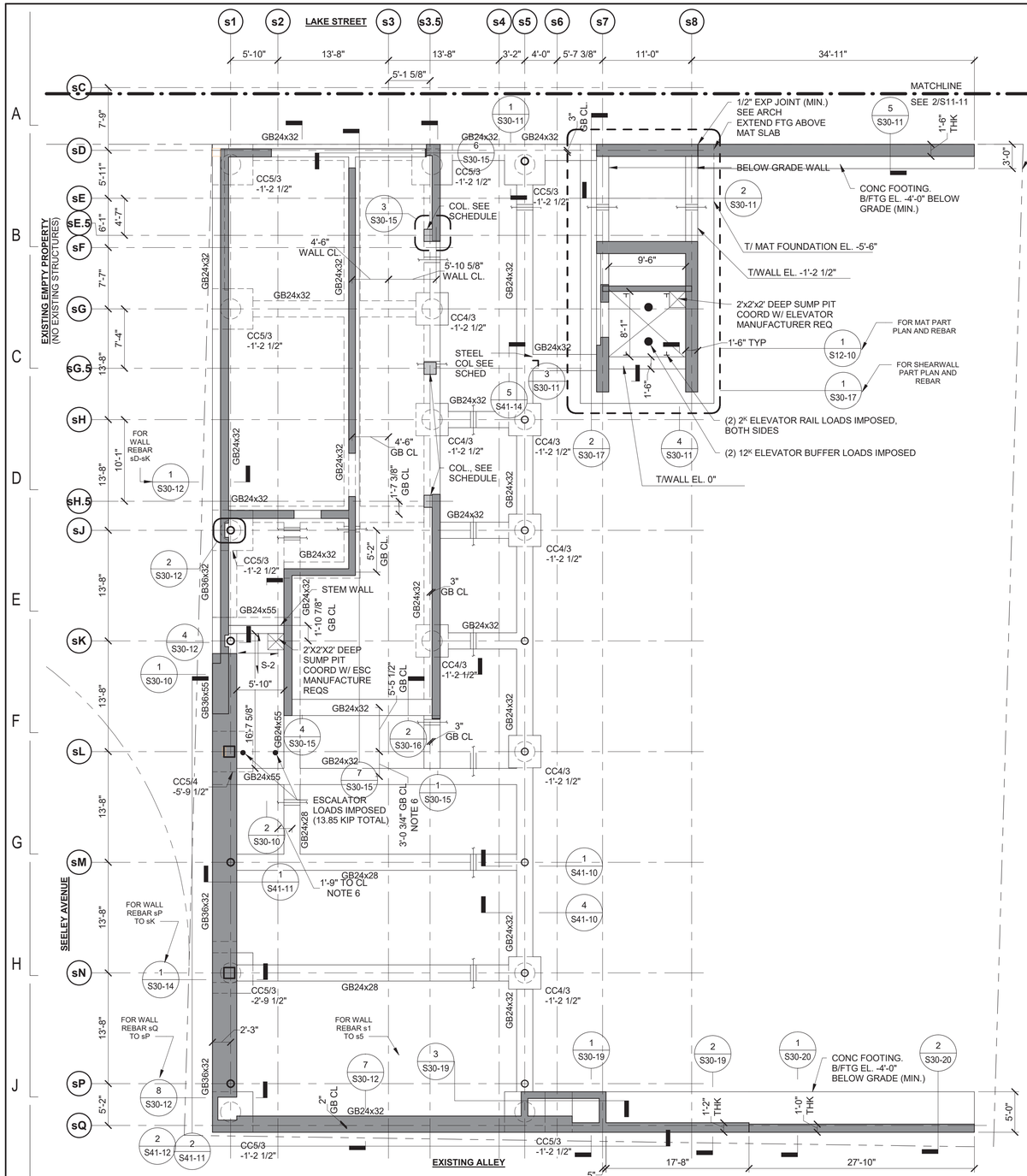

1 STATION HOUSE - CAISSON CAP SOUTH PLAN
1/8" = 1'-0"

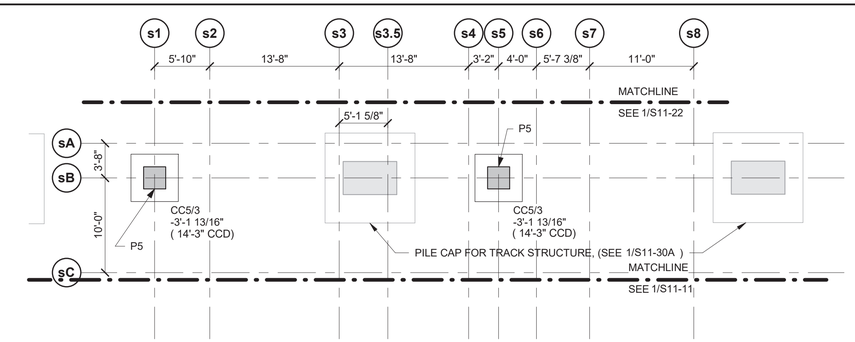

2 STATION HOUSE - CAISSON CAP NORTH PLAN
1/8" = 1'-0"

FOUNDATION PLAN NOTES:

1. GB#x# INDICATES GRADE BEAM. TOP OF GRADE BEAM ELEVATION TO MATCH 1'-0" BELOW TOP OF SLAB ELEVATION, UON. SLOPE AS REQUIRED TO MATCH TOP OF SLAB ELEVATIONS.
2. GRADE BEAMS ARE CENTERED ON GRIDS UNLESS OTHERWISE INDICATED.
3. CONTRACTOR SHALL SUBMIT A PLAN OF ALL HORIZONTAL BEAM PENETRATIONS FOR REVIEW BY THE EOR PRIOR TO GRADE BEAM REBAR SHOP DRAWINGS. ANTICIPATE BELOW SLAB PLUMBIING ARE INDICATED BY THE SYMBOL
4. SP ON PLAN INDICATES 2'-0"X2'-0"X2'-0" DEEP SUMP PIT. COORDINATE WITH ESCALATOR / ELEVATOR REQUIREMENT.
5. COORDINATE THE LOCATION OF ALL GRADE BEAMS SURROUNDING THE ESCALATOR PIT WITH ESCALATOR MANUFACTURER.
6. FOR COLUMN SIZE AND BASE PLATE INFORMATION SEE COLUMN SCHEDULE
7. ALL WALL REBAR, INCLUDING DOWELS INTO FOUNDATION ELEMENTS, SHALL BE #6@12" OC UON.

GRADE BEAM AND CAISSON CAP LEGEND

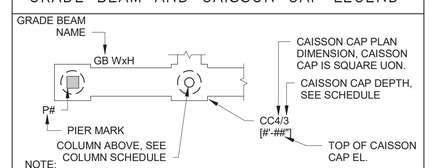

NOTE:
1. SEE TYPICAL DETAILS FOR CAISSON CAP INFORMATION AND SCHEDULE
2. ALL CAISSON DIMENSIONS ARE MIN. DESIGN DIMENSIONS
3. ELEVATIONS MEASURED TO PROJECT DATUM 0'-0" (= 17.4' CCD), UON
4. CAISSON CAP TO BE CENTERED ON CAISSON, UON.

SLAB TYPE - S-2 **f'c=5000 PSI**

12" THICK NORMAL WEIGHT CONCRETE TWO-WAY STRUCTURAL SLAB. REINFORCE WITH #7@12" OC IN EACH DIRECTION TOP AND BOTTOM UNLESS OTHERWISE NOTED. TOP OF SLAB ELEVATION SLOPE TO MATCH ARCH DWGS FOR ELEVATIONS AND SLOPE.

CAISSON CAP SCHEDULE (f'c = 6,000 psi) S30-01

TYPE	WIDTH ('W')	LENGTH ('L')	THICKNESS ('H')	'C' BARS: REINFORCEMENT (EACH WAY)	'D' BARS: TIE SPACING	'E' BARS: SLAB CONN. DOWELS
CC4/3	4'-0"	4'-0"	3'-0"			NONE
CC5/3	5'-0"	5'-0"	3'-0"	(10)#7	(10)#7	NONE
CC5/4	5'-0"	5'-0"	4'-0"	(10)#7	(10)#7	NONE

GRADE BEAM SCHEDULE (f'c = 6,000 psi) S30-02 to S30-03

Type	WIDTH ('W')	DEPTH ('H')	BOTTOM REBAR	TOP REBAR	SIDE REBAR	STIRRUPS	STIRRUP SPACING	REMARKS
GB24x28	2'-0"	2'-4"	(5)#9	(5)#7	(4)#7 EA FACE	#4	12" OC	
GB24x32	2'-0"	2'-10"	(5)#9	(5)#7	(4)#7 EA FACE	#4	12" OC	
GB24x55	2'-0"	4'-7"	(7)#9	(7)#7	#5@5" OC	#4	12" OC	
GB36x32	3'-0"	2'-10"	(7)#9	(7)#7	(4)#7 EA FACE	#4	12" OC	
GB36x55	3'-0"	4'-7"	(10)#9	(10)#7	#5@5" OC	#4	12" OC	

DESIGN BY:								
DRAWN BY:								
CHECKED BY:								
APPROVED BY:		01/27/2020	ISSUE FOR BID	EJT	MW	TRM		
CDOT/APPROVED BY:	NO.	DATE	REVISIONS	DES.	DRW.	CHK.	DCCO	CDOT

SIMPSON GUMPERTZ & HEGER
Engineering of Structures and Building Enclosures
Simpson Gumpertz & Heger Inc.
135 South LaSalle Street, Suite 3800
Chicago, Illinois 60603
main: 312.754.7500 fax: 312.754.7501
www.sgh.com

PERKINS+WILL
The Wrigley Building
410 North Michigan Ave.
Suite 1600
Chicago, IL 60611
t 312.755.0770
f 312.755.0775
www.perkinswill.com

CDOT
CHICAGO DEPARTMENT OF TRANSPORTATION
DIVISION OF ENGINEERING

154 N DAMEN AVE - DAMEN GREEN LINE STATION

STATION HOUSE - CAP PLAN

CDOT PROJECT D-7-135 | DATE: 01/27/2020

SPEC. NO.

DRAWING NO. S11-11

REVISION NO.

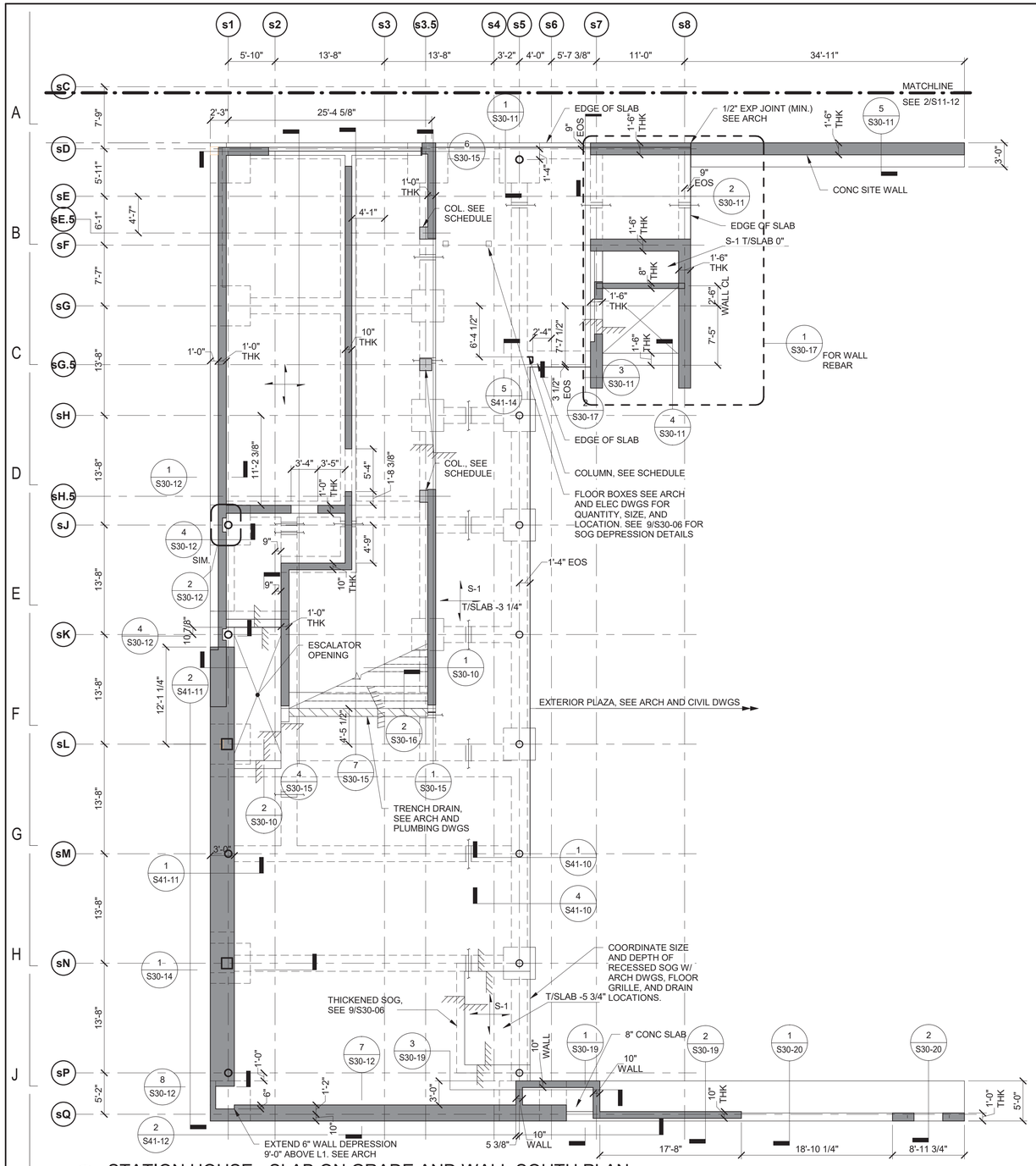

1 STATION HOUSE - SLAB ON GRADE AND WALL SOUTH PLAN

1/8" = 1'-0"

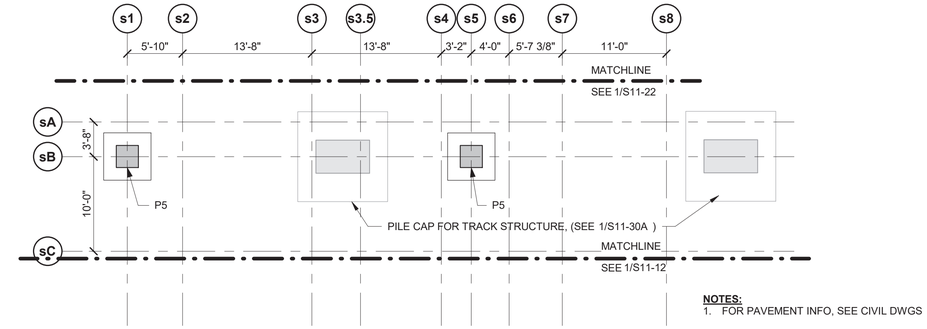

NOTES:
1. FOR PAVEMENT INFO, SEE CIVIL DWGS

2 STATION HOUSE - SLAB ON GRADE AND WALL NORTH PLAN

1/8" = 1'-0"

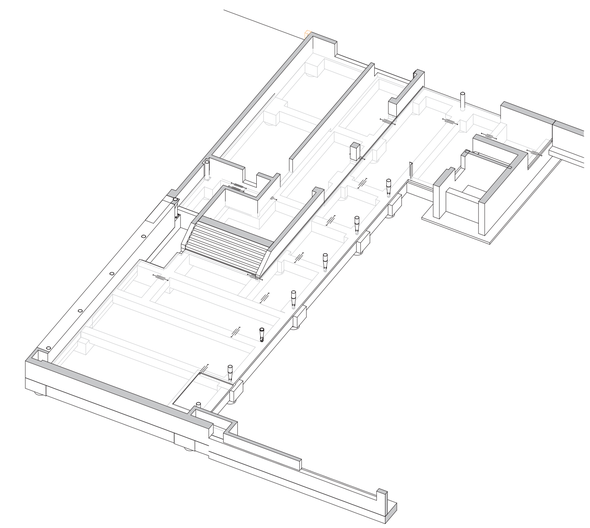

3 3D PERSPECTIVE

CONCRETE SOG PLAN NOTES:

1. SEE GENERAL NOTES, TYPICAL DETAILS, AND SPECIFICATIONS FOR ADDITIONAL INFORMATION.
2. S-# ON PLAN INDICATES SLAB CONSTRUCTION TYPE AND SPAN DIRECTION. SEE SLAB NOTES THIS SHEET FOR SLAB INFORMATION.
3. ON PLAN INDICATES CHANGE IN SLAB ELEVATION. SEE ARCHITECTURAL DRAWINGS FOR LIMITS AND LOCATIONS.
4. SP ON PLAN INDICATES SUMP PIT, SEE TYPICAL DETAILS.
5. ON PLAN INDICATES POSSIBLE EARTH RETENTION SYSTEM, DESIGNED AND INSTALLED BY THE CONTRACTOR.
6. ALL WALLS SHALL BE 10" THICK, UON.
7. ALL WALL REINFORCEMENT SHALL BE #6@12" EF, EW, UON.
8. FOR COLUMN SIZE AND BASE PLATE INFO, SEE COLUMN SCHEDULE, S40-10
9. P# ON PLAN INDICATES PIER, SEE S30-05

SLAB TYPE - S-1
6" THICK NORMAL WEIGHT CONCRETE SLAB-ON-GRADE (SOG). REINFORCE WITH #4@12" OC IN EACH DIRECTION. PLACE OVER VAPOR RETARDER ON TOP OF CRUSHED STONE SUBBASE AND STABILIZATION GEOTEXTILE FABRIC. SEE TYPICAL DETAILS AND GEOTECHNICAL REPORT FOR ADDITIONAL INFORMATION REGARDING SUBBASE PREPARATION. [T/SLAB EL. -3 1/4" UNO]

SLAB TYPE - S-2 **f'c=5000 PSI**
12" THICK NORMAL WEIGHT CONCRETE TWO-WAY STRUCTURAL SLAB. REINFORCE WITH #7@12" OC IN EACH DIRECTION TOP AND BOTTOM UNLESS OTHERWISE NOTED. TOP OF SLAB ELEVATION SLOPED, SEE ARCH DWGS FOR ELEVATIONS AND SLOPE.

DESIGN BY:								
DRAWN BY:								
CHECKED BY:								
APPROVED BY:			01/27/2020	ISSUE FOR BID	EJT	MW	TRM	
CDOT/APPROVED BY:		NO.	DATE	REVISIONS	DES.	DRW.	CHK.	DCCO	CDOT

SIMPSON GUMPERTZ & HEGER
Engineering of Structures and Building Enclosures
Simpson Gumpertz & Heger Inc.
135 South LaSalle Street, Suite 3800
Chicago, Illinois 60603
main: 312.754.7500 fax: 312.754.7501
www.sgh.com

PERKINS+WILL
The Wrigley Building
410 North Michigan Ave.
Suite 1600
Chicago, IL 60611
t 312.755.0770
f 312.755.0775
www.perkinswill.com

CDOT
CHICAGO DEPARTMENT OF TRANSPORTATION
DIVISION OF ENGINEERING

154 N DAMEN AVE - DAMEN GREEN LINE STATION

SPEC. NO.

STATION HOUSE - SLAB-ON-GRADE PLAN

DRAWING NO. **S11-12**

CDOT PROJECT D-7-135 | DATE: 01/27/2020 | REVISION NO.

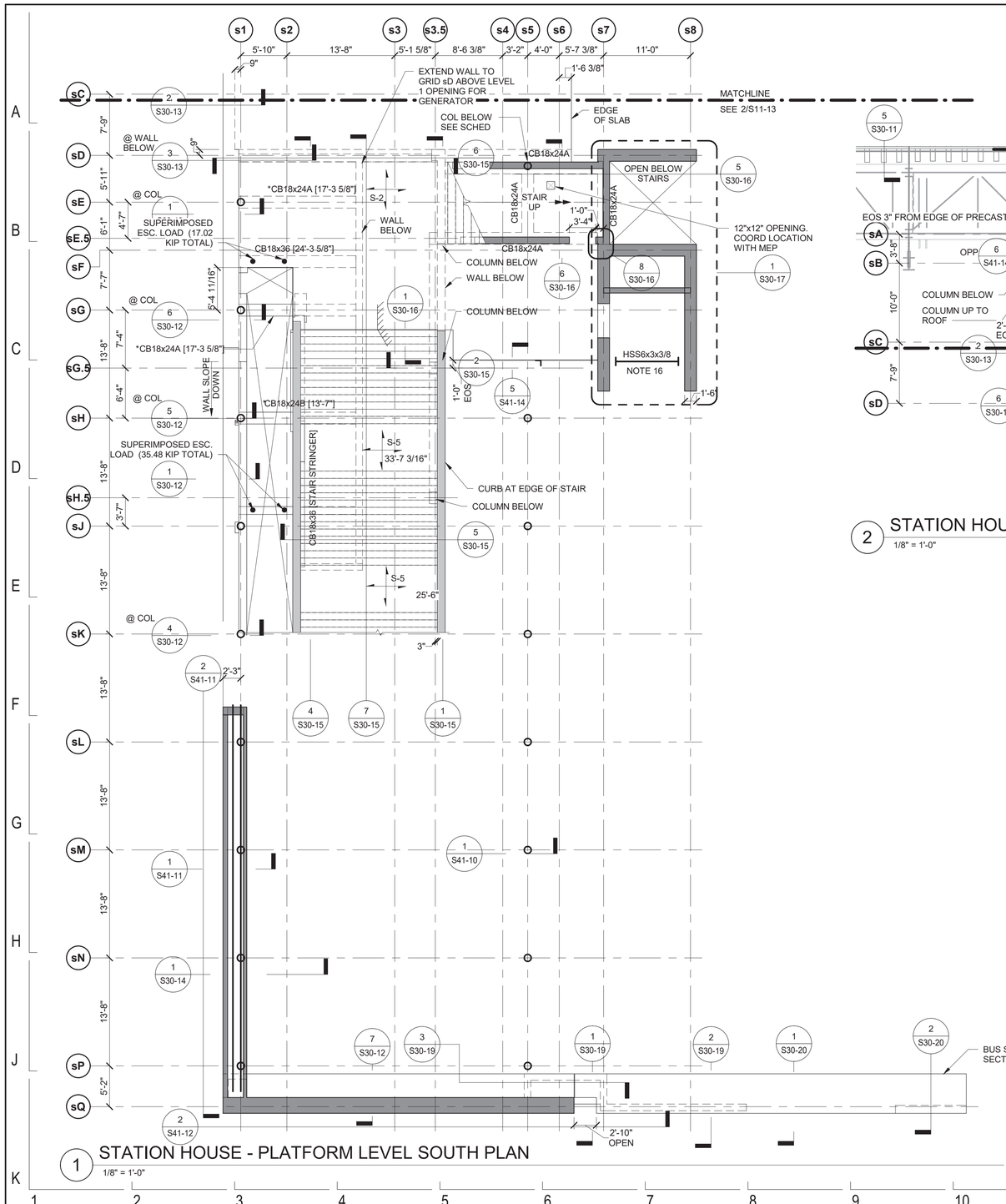

1 STATION HOUSE - PLATFORM LEVEL SOUTH PLAN

1/8" = 1'-0"

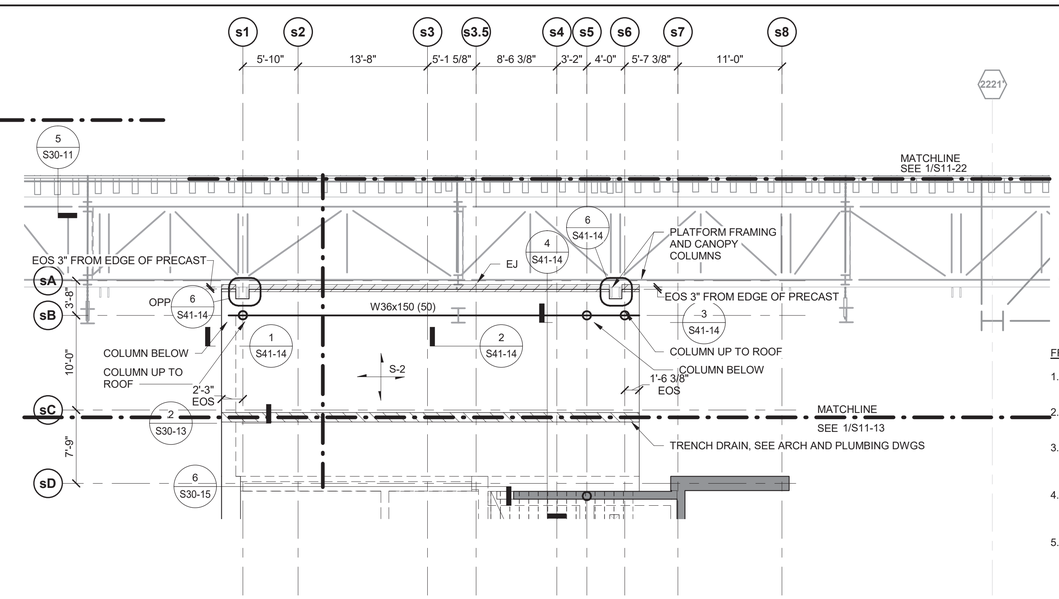

2 STATION HOUSE - PLATFORM LEVEL NORTH PLAN

1/8" = 1'-0"

FRAMING PLAN NOTES:

1. SEE GENERAL NOTES AND TYPICAL DETAILS FOR ADDITIONAL INFORMATION.
2. FIELD VERIFY EXISTING STRUCTURE DIMENSIONS, ELEVATIONS, AND CONDITIONS.
3. ON PLAN INDICATES SLAB CONSTRUCTION AND SPAN DIRECTION. SEE SLAB NOTES THIS SHEET FOR SLAB INFORMATION.
4. ON PLAN INDICATES CHANGE IN SLAB ELEVATION. SEE SEE ARCHITECTURAL DETAILS FOR LIMITS AND LOCATIONS.
5. ON PLAN INDICATES OPENING THROUGH ROOF CONSTRUCTION. SEE TYPICAL DETAIL FOR SUPPORT REQUIREMENTS. LOCATIONS SHOWN ARE APPROXIMATE AND NOT ALL OPENINGS MAY BE INDICATED. COORDINATE SIZE, QUANTITY, AND LOCATION WITH ALL CONSTRUCTION DOCUMENTS AND REFLECT NECESSARY FRAMING AND REINFORCEMENT IN SHOP DRAWINGS SUBMITTED FOR REVIEW.
6. ALL BEAMS ARE SPACED EQUALLY BETWEEN MAJOR GRIDS UNLESS OTHERWISE NOTED.
7. RD/FD — ON PLAN INDICATES FLOOR DRAIN IN SLAB. LOCATIONS ARE SHOWN SCHEMATICALLY SEE ARCHITECTURAL DRAWINGS FOR ADD'L INFO AND SLOPE TO DRAIN. SEE TYPICAL DECK REINFORCEMENT AT OPENINGS DETAILS.
8. L 1 — ON PLAN INDICATES L6x4x3/8 ANGLE (LLV) STEEL ANGLE, SEE FOR CONNECTION TO CONCRETE WALLS AND FOR CONNECTION TO CMU.
9. BP - # — ON PLAN INDICATES BEARING PLATE, SEE TYPICAL DETAILS.
10. EP-# — ON PLAN INDICATES EMBEDDED STEEL PLATE. SEE TYPICAL DETAILS FOR ADDITIONAL INFORMATION. 5/S41-00
11. FOR T/STEEL EL SEE ELEVATIONS S20-21 THROUGH S20-28.
12. CB#X# — ON PLAN INDICATES CONCRETE BEAM, SEE SCHEDULE IN TYPICAL DETAILS. 1/S30-08
13. EXTERIOR GIRTS CALLED OUT ON WALL ELEVATIONS
14. ALL COLUMNS ARE THROUGH SLAB ELEVATION UON
15. * — DENOTES CONCRETE BEAMS THAT ARE BELOW AND NOT CONNECTED TO LEVEL 02 SLAB
16. ELEVATOR RAIL SUPPORT. COORDINATE LOCATION WITH GLAZING CONTRACTOR AND ELEVATOR MANUFACTURER. SEE EXTERIOR WALL ELEVATIONS.

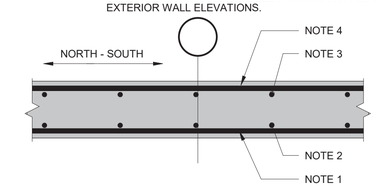

NOTES:
1. PLACE NORTH-SOUTH (PARALLEL TO LETTERED GRID LINES) BOTTOM BARS FIRST
2. PLACE EAST-WEST (PARALLEL TO NUMBERED GRID LINES) BOTTOM BARS SECOND
3. PLACE EAST-WEST (PARALLEL TO NUMBERED GRID LINES) TOP BARS THIRD
4. PLACE NORTH-SOUTH (PARALLEL TO LETTERED GRID LINES) TOP BARS FOURTH

SLAB TYPE - S-2 **f'c=5000 PSI**
12" THICK NORMAL WEIGHT CONCRETE TWO-WAY STRUCTURAL SLAB. REINFORCE WITH #7@12" OC IN EACH DIRECTION TOP AND BOTTOM UNLESS OTHERWISE NOTED. TOP OF SLAB ELEVATION SLOPED, SEE ARCH DWGS FOR ELEVATIONS AND SLOPE.

SLAB TYPE - S-5 **f'c=5000 PSI**
12" THICK MINIMUM NORMAL WEIGHT CONCRETE TWO-WAY STRUCTURAL SLAB. REINFORCE WITH #5@12" OC IN EACH DIRECTION TOP AND BOTTOM UNLESS OTHERWISE NOTED. TOP OF SLAB ELEVATION AS NOTED.

DESIGN BY:								
DRAWN BY:								
CHECKED BY:								
APPROVED BY:			01/27/2020	ISSUE FOR BID	EJT	MW	TRM	
CDOT/APPROVED BY:		NO.	DATE	REVISIONS	DES.	DRW.	CHK.	DCCO	CDOT

SIMPSON GUMPERTZ & HEGER
Engineering of Structures and Building Enclosures
Simpson Gumpertz & Heger Inc.
135 South LaSalle Street, Suite 3800
Chicago, Illinois 60603
main: 312.754.7500 fax: 312.754.7501
www.sgh.com

PERKINS+WILL
The Wrigley Building
410 North Michigan Ave.
Suite 1600
Chicago, IL 60611
t 312.755.0770
f 312.755.0775
www.perkinswill.com

CDOT
CHICAGO DEPARTMENT OF TRANSPORTATION
DIVISION OF ENGINEERING

154 N DAMEN AVE - DAMEN GREEN LINE STATION

STATION HOUSE - PLATFORM LEVEL PLAN

CDOT PROJECT D-7-135 | DATE: 01/27/2020

SPEC. NO.

DRAWING NO. **S11-13**

REVISION NO.

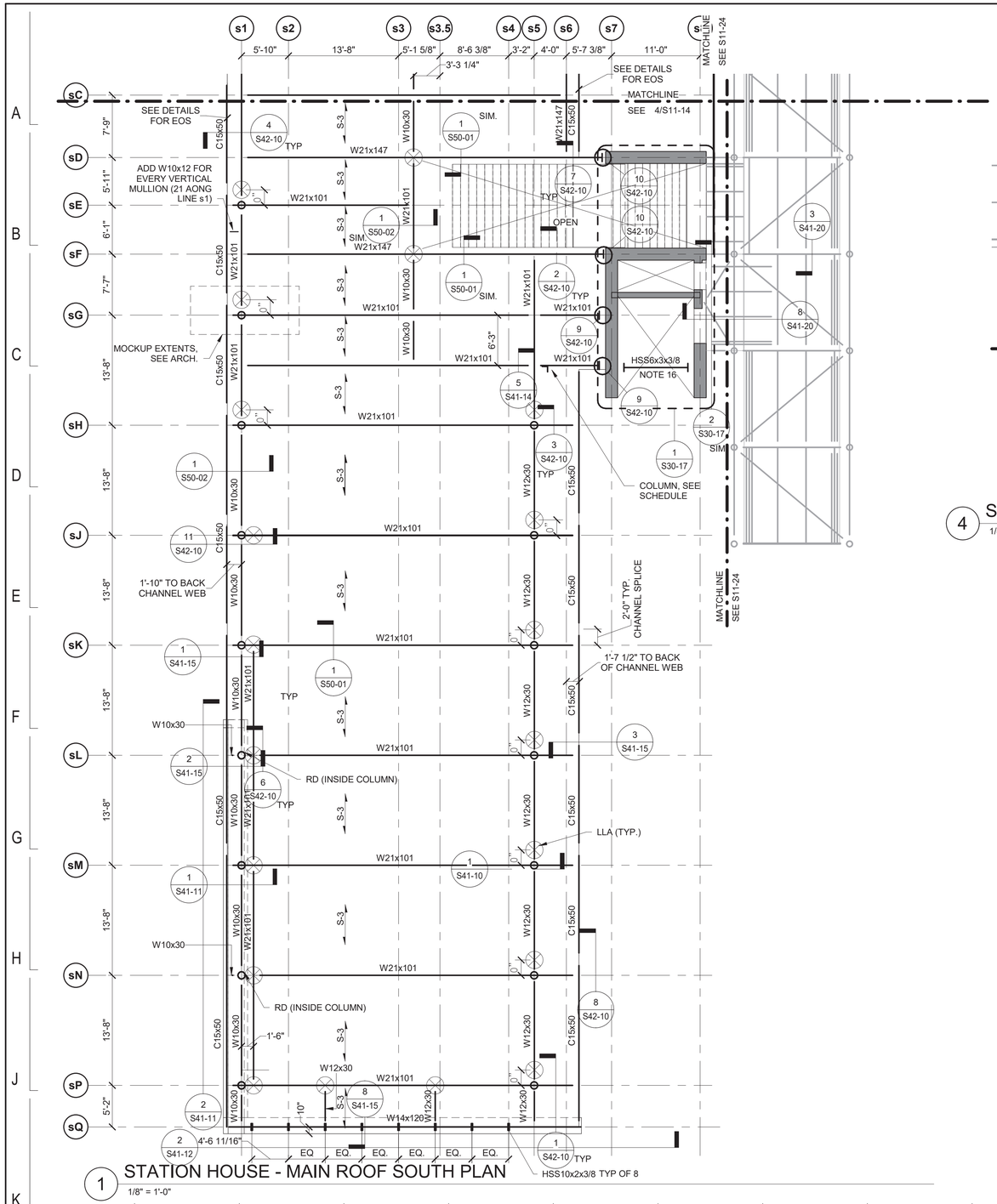

1 STATION HOUSE - MAIN ROOF SOUTH PLAN
1/8" = 1'-0"

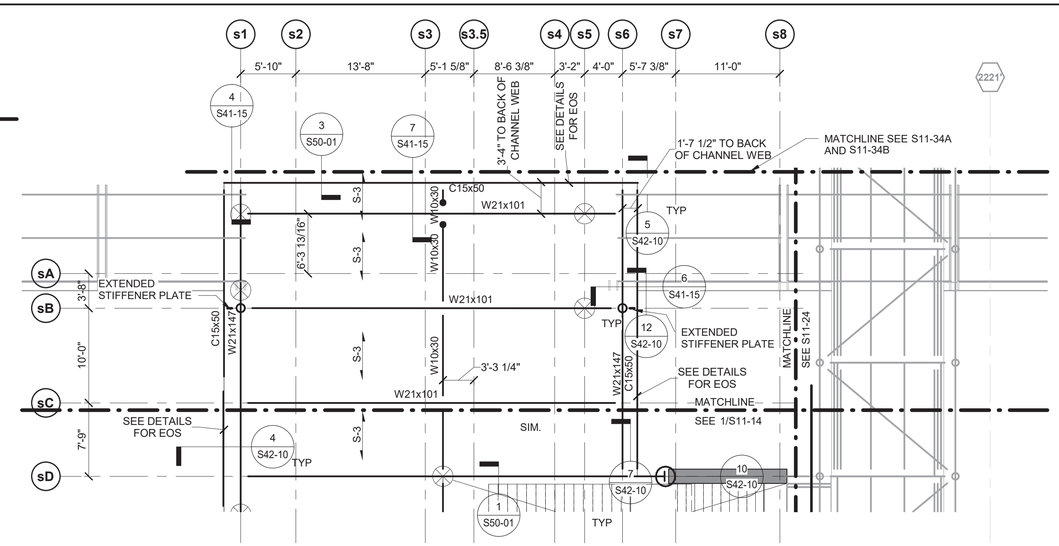

4 STATION HOUSE - MAIN ROOF NORTH PLAN
1/8" = 1'-0"

MAIN STATION ROOF FRAMING PLAN NOTES:

1. TYPICAL BOTTOM OF STEEL (BOS) FOR MAIN ROOF FRAMING TO BE AT EL. = +37'-6 5/8". ELEVATION DIFFERENCE SHOWN AS [±X'-XX"] INDICATES T/STEEL FOR STRUCTURAL FRAMING WITH RESPECT TO THIS ELEVATION. T/STEEL ELEVATION REFERS TO THE TOP OF STRUCTURAL STEEL SHAPES, NOT THE TOP OF STRUCTURAL STEEL SHIMS.
2. ALL ROOF STEEL IS HOT DIP GALVANIZED, INCLUDING STEEL TO SUPPORT THE ROOF FASCIA PLATE.

FRAMING PLAN NOTES:

1. SEE GENERAL NOTES AND TYPICAL DETAILS FOR ADDITIONAL INFORMATION.
2. FIELD VERIFY EXISTING STRUCTURE DIMENSIONS, ELEVATIONS, AND CONDITIONS.
3. ON PLAN INDICATES SLAB CONSTRUCTION AND SPAN DIRECTION. SEE SLAB NOTES THIS SHEET FOR SLAB INFORMATION.
4. ON PLAN INDICATES CHANGE IN SLAB ELEVATION. SEE SEE ARCHITECTURAL DETAILS FOR LIMITS AND LOCATIONS.
5. ON PLAN INDICATES OPENING THROUGH ROOF CONSTRUCTION. SEE TYPICAL DETAIL FOR SUPPORT REQUIREMENTS. LOCATIONS SHOWN ARE APPROXIMATE AND NOT ALL OPENINGS MAY BE INDICATED. COORDINATE SIZE, QUANTITY, AND LOCATION WITH ALL CONSTRUCTION DOCUMENTS AND REFLECT NECESSARY FRAMING AND REINFORCEMENT IN SHOP DRAWINGS SUBMITTED FOR REVIEW.
6. ALL BEAMS ARE SPACED EQUALLY BETWEEN MAJOR GRIDS UNLESS OTHERWISE NOTED.
7. RD/FD — ON PLAN INDICATES FLOOR DRAIN IN SLAB. LOCATIONS ARE SHOWN SCHEMATICALLY SEE ARCHITECTURAL DRAWINGS FOR ADD'L INFO AND SLOPE TO DRAIN. SEE TYPICAL DECK REINFORCEMENT AT OPENINGS DETAILS.
8. L 1 — ON PLAN INDICATES L6x4x3/8 ANGLE (LLV) STEEL ANGLE, SEE FOR CONNECTION TO CONCRETE WALLS AND FOR CONNECTION TO CMU.
9. BP - # — ON PLAN INDICATES BEARING PLATE, SEE TYPICAL DETAILS.
10. EP-# — ON PLAN INDICATES EMBEDDED STEEL PLATE. SEE TYPICAL DETAILS FOR ADDITIONAL INFORMATION. 5/S41-00
11. FOR T/STEEL EL SEE ELEVATIONS S20-21 THROUGH S20-28.
12. CB#X# — ON PLAN INDICATES CONCRETE BEAM, SEE SCHEDULE IN TYPICAL DETAILS. 1/S30-08
13. EXTERIOR GIRTS CALLED OUT ON WALL ELEVATIONS
14. ALL COLUMNS ARE THROUGH SLAB ELEVATION UON
15. * — DENOTES CONCRETE BEAMS THAT ARE BELOW AND NOT CONNECTED TO LEVEL 02 SLAB
16. ELEVATOR RAIL SUPPORT. COORDINATE LOCATION WITH GLAZING CONTRACTOR AND ELEVATOR MANUFACTURER. SEE EXTERIOR WALL ELEVATIONS.

STEEL BEAM LEGEND

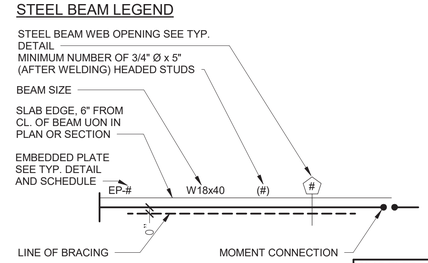

SLAB TYPE - S-3 [T/NLT EL. 38'-0 7/8" UNO]
2x10 (1-1/2"x9-1/4" ACTUAL DEPTH, DFL (#1/#2) NAIL LAMINATED TIMBER (NLT). PROVIDE 3/4" STRUC. I PLYWOOD AS TOP LAYER WITH 10d EDGE NAILING AT 6" OC. SEE SPECIFICATIONS FOR LUMBER APPEARANCE REQUIREMENTS

DESIGN BY:								
DRAWN BY:								
CHECKED BY:								
APPROVED BY:		01/27/2020	ISSUE FOR BID	EJT	MW	TRM		
CDOT/APPROVED BY:		NO.	DATE	REVISIONS	DES.	DRW.	CHK.	DCCO	CDOT

SIMPSON GUMPERTZ & HEGER
Engineering of Structures and Building Enclosures
Simpson Gumpertz & Heger Inc.
135 South LaSalle Street, Suite 3800
Chicago, Illinois 60603
main: 312.754.7500 fax: 312.754.7501
www.sgh.com

PERKINS+WILL
The Wrigley Building
410 North Michigan Ave.
Suite 1600
Chicago, IL 60611
t 312.755.0770
f 312.755.0775
www.perkinswill.com

CDOT
CHICAGO DEPARTMENT OF TRANSPORTATION
DIVISION OF ENGINEERING

154 N DAMEN AVE - DAMEN GREEN LINE STATION

STATION HOUSE - MAIN ROOF PLAN

CDOT PROJECT D-7-135 | DATE: 01/27/2020

SPEC. NO.

DRAWING NO. S11-14

REVISION NO.

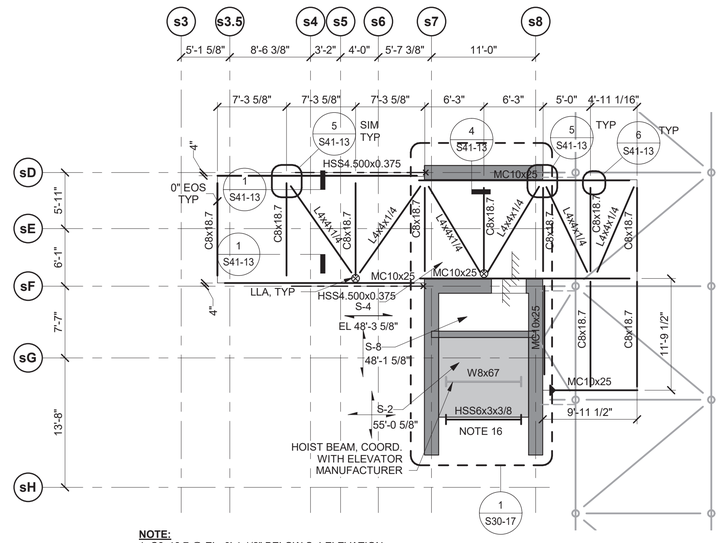

NOTE:
1. C8x18.7 @ EL -0'-1 1/2" BELOW S-4 ELEVATION
2. ALL ROOF STEEL TO BE HOT DIPPED GALVANIZED

1 STATION HOUSE - HIGH ROOF PLAN

1/8" = 1'-0"

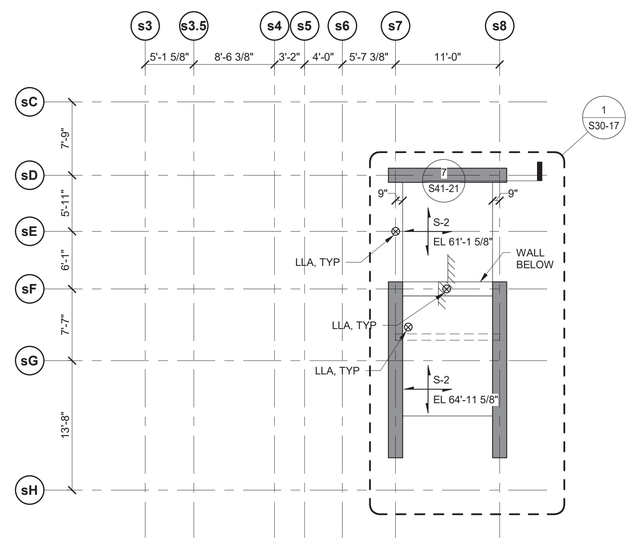

2 STATION HOUSE - TOP OF CORE ROOF PLAN

1/8" = 1'-0"

FRAMING PLAN NOTES:

1. SEE GENERAL NOTES AND TYPICAL DETAILS FOR ADDITIONAL INFORMATION.
2. FIELD VERIFY EXISTING STRUCTURE DIMENSIONS, ELEVATIONS, AND CONDITIONS.
3. ON PLAN INDICATES SLAB CONSTRUCTION AND SPAN DIRECTION. SEE SLAB NOTES THIS SHEET FOR SLAB INFORMATION.
4. ON PLAN INDICATES CHANGE IN SLAB ELEVATION. SEE SEE ARCHITECTURAL DETAILS FOR LIMITS AND LOCATIONS.
5. ON PLAN INDICATES OPENING THROUGH ROOF CONSTRUCTION. SEE TYPICAL DETAIL FOR SUPPORT REQUIREMENTS. LOCATIONS SHOWN ARE APPROXIMATE AND NOT ALL OPENINGS MAY BE INDICATED. COORDINATE SIZE, QUANTITY, AND LOCATION WITH ALL CONSTRUCTION DOCUMENTS AND REFLECT NECESSARY FRAMING AND REINFORCEMENT IN SHOP DRAWINGS SUBMITTED FOR REVIEW.
6. ALL BEAMS ARE SPACED EQUALLY BETWEEN MAJOR GRIDS UNLESS OTHERWISE NOTED.
7. RD/FD — ON PLAN INDICATES FLOOR DRAIN IN SLAB. LOCATIONS ARE SHOWN SCHEMATICALLY SEE ARCHITECTURAL DRAWINGS FOR ADD'L INFO AND SLOPE TO DRAIN. SEE TYPICAL DECK REINFORCEMENT AT OPENINGS DETAILS.
8. L 1 — ON PLAN INDICATES L6x4x3/8 ANGLE (LLV) STEEL ANGLE, SEE FOR CONNECTION TO CONCRETE WALLS AND FOR CONNECTION TO CMU.
9. BP - # — ON PLAN INDICATES BEARING PLATE, SEE TYPICAL DETAILS.
10. EP-# — ON PLAN INDICATES EMBEDDED STEEL PLATE. SEE TYPICAL DETAILS FOR ADDITIONAL INFORMATION. 5/S41-00
11. FOR T/STEEL EL SEE ELEVATIONS S20-21 THROUGHS20-28.
12. CB#X# — ON PLAN INDICATES CONCRETE BEAM, SEE SCHEDULE IN TYPICAL DETAILS. 1/S30-08
13. EXTERIOR GIRTS CALLED OUT ON WALL ELEVATIONS
14. ALL COLUMNS ARE THROUGH SLAB ELEVATION UON
15. * — DENOTES CONCRETE BEAMS THAT ARE BELOW AND NOT CONNECTED TO LEVEL 02 SLAB
16. ELEVATOR RAIL SUPPORT. COORDINATE LOCATION WITH GLAZING CONTRACTOR AND ELEVATOR MANUFACTURER. SEE EXTERIOR WALL ELEVATIONS.

STEEL BEAM LEGEND

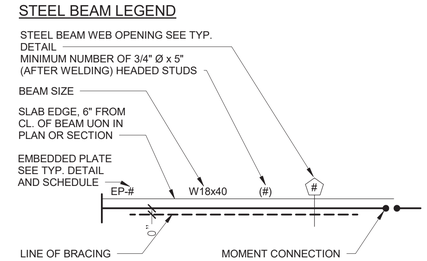

SLAB TYPE - S-2 **f'c=5000 PSI**
12" THICK NORMAL WEIGHT CONCRETE TWO-WAY STRUCTURAL SLAB. REINFORCE WITH #7@12" OC IN EACH DIRECTION TOP AND BOTTOM UNLESS OTHERWISE NOTED. TOP OF SLAB ELEVATION SL64'-11 5/8" UONCH DWGS FOR ELEVATIONS AND SLOPE.

SLAB TYPE - S-4
1 1/2" - 18 GA. (MIN) GALVANIZED STEEL ROOF DECK, TYPE B, PLACED WITH NARROW RIBS DOWN OVER STEEL FRAMING. ALL DECK TO BE PLACED OVER TWO SPANS, MIN. DECK GAUGE PROVIDED IS MIN. REQUIRED FOR STRUCTURAL LOADS. CONTRACTOR TO INCREASE GAUGE, IF REQUIRED, TO MEET FM GLOBAL REQUIREMENTS OF ENTIRE ROOF ASSEMBLY.

SLAB TYPE - S-8
METAL BAR GRATING - SEE GENERAL NOTE 7.E.q FOR ADDITIONAL INFORMATION

DESIGN BY:									
DRAWN BY:									
CHECKED BY:									
APPROVED BY:			01/27/2020	ISSUE FOR BID	EJT	MW	TRM		
CDOT/APPROVED BY:		NO.	DATE	REVISIONS	DES.	DRW.	CHK.	DCCO	CDOT

SIMPSON GUMPERTZ & HEGER
Engineering of Structures and Building Enclosures
Simpson Gumpertz & Heger Inc.
135 South LaSalle Street, Suite 3800
Chicago, Illinois 60603
main: 312.754.7500 fax: 312.754.7501
www.sgh.com

PERKINS+WILL
The Wrigley Building
410 North Michigan Ave.
Suite 1600
Chicago, IL 60611
t 312.755.0770
f 312.755.0775
www.perkinswill.com

CDOT
CHICAGO DEPARTMENT OF TRANSPORTATION
DIVISION OF ENGINEERING

154 N DAMEN AVE - DAMEN GREEN LINE STATION

STATION HOUSE - HIGH ROOF PLAN

CDOT PROJECT D-7-135 | DATE: 01/27/2020

SPEC. NO.

DRAWING NO. **S11-15**

REVISION NO.

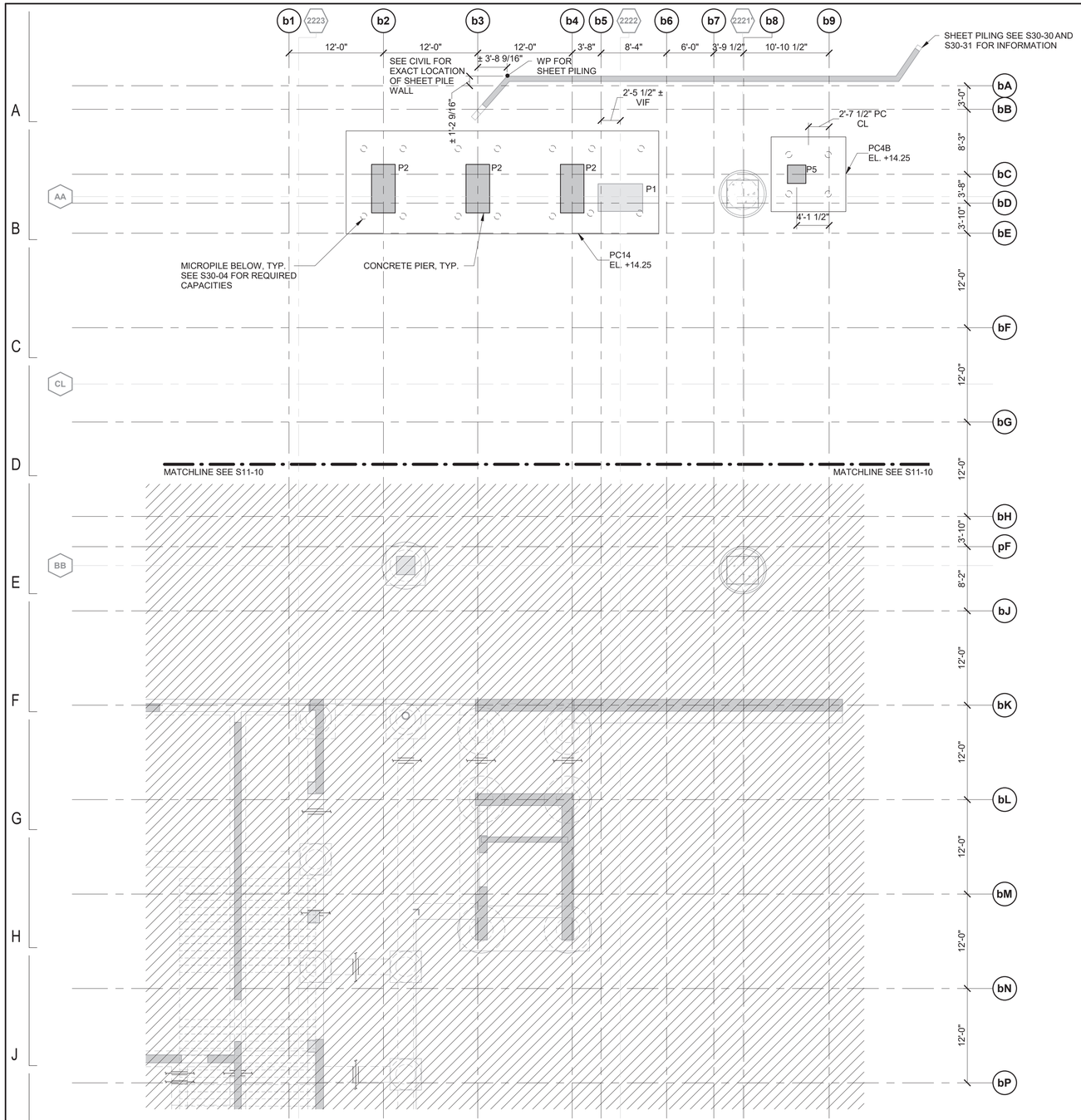

1 TOWER/BRIDGE - FOUNDATION PLAN

1/8" = 1'-0"

FOUNDATION PLAN NOTES:

1. SEE GENERAL NOTES, TYPICAL DETAILS, AND SPECIFICATIONS FOR ADDITIONAL INFORMATION.
2. DIMENSIONS INDICATED FOR EXISTING STRUCTURES SHALL BE VERIFIED IN FIELD.
3. REFER TO ADVANCED UNDERGROUND PACKAGE DATED 11/09/2018 FOR DAMEN GREEN LINE STATION, CDOT PROJECT D-7-135A FOR ADDITIONAL INFORMATION ON EXISTING MICROPILES.
4. SEE S30-04 FOR MICROPILE DETAILS AND PILE CAP SCHEDULE.
5. SEE S30-04 FOR PILE CAP SCHEDULE AND LAYOUTS.
6. SEE S30-05 FOR FOOTING/PIER SCHEDULE AND DETAILS.
7. FOR INFORMATION ON EXISTING TRACK COLUMN LINES SEE S11-30

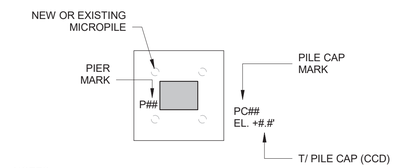

NOTES:
1. TOP OF PIER ELEVATION = 2'-3"± ABOVE GRADE, UON.
2. SEE CIVIL DWGS FOR PROJECT GRADE ELEVATIONS.

PILE & PILE CAP LEGEND

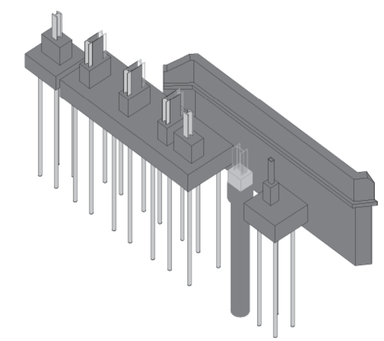

2 3D PERSPECTIVE

DESIGN BY:									
DRAWN BY:									
CHECKED BY:									
APPROVED BY:			01/27/2020	ISSUE FOR BID	EJT	MW	TRM		
CDOT/APPROVED BY:		NO.	DATE	REVISIONS	DES.	DRW.	CHK.	DCCO	CDOT

SIMPSON GUMPERTZ & HEGER
Engineering of Structures and Building Enclosures
Simpson Gumpertz & Heger Inc.
135 South LaSalle Street, Suite 3800
Chicago, Illinois 60603
main: 312.754.7500 fax: 312.754.7501
www.sgh.com

PERKINS+WILL
The Wrigley Building
410 North Michigan Ave.
Suite 1600
Chicago, IL 60611
t 312.755.0770
f 312.755.0775
www.perkinswill.com

CDOT
CHICAGO DEPARTMENT OF TRANSPORTATION
DIVISION OF ENGINEERING

154 N DAMEN AVE - DAMEN GREEN LINE STATION

TOWER/BRIDGE - FOUNDATION PLAN

CDOT PROJECT D-7-135 | DATE: 01/27/2020

SPEC. NO.

DRAWING NO. S11-20

REVISION NO.

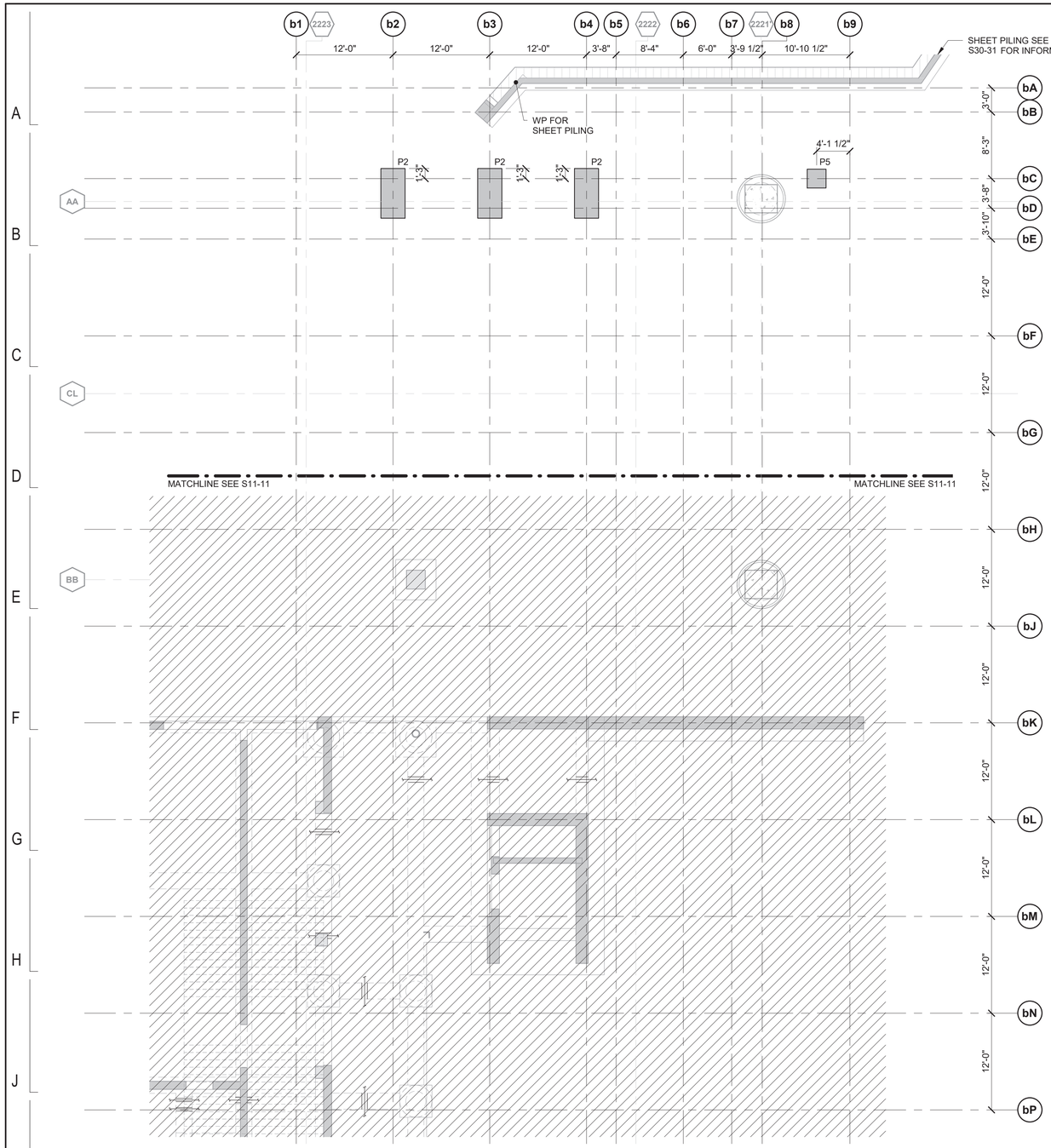

1 TOWER/BRIDGE - GRADE PLAN

1/8" = 1'-0"

FOUNDATION PLAN NOTES:

1. SEE GENERAL NOTES, TYPICAL DETAILS, AND SPECIFICATIONS FOR ADDITIONAL INFORMATION.
2. FIELD VERIFY EXISTING STRUCTURE DIMENSIONS, ELEVATIONS, AND CONDITIONS.
3. SEE ADVANCED UNDERGROUND PACKAGE DATED 11/09/2018 FOR DAMEN GREEN LINE STATION, CDOT PROJECT D-7-135A FOR ADDITIONAL INFORMATION ON EXISTING MICROPILES.
4. SEE S30-04 FOR MICROPILE DETAILS AND PILE CAP SCHEDULE.
5. SEE S30-04 FOR PILE CAP SCHEDULE AND LAYOUTS.
6. SEE S30-05 FOR FOOTING/PIER SCHEDULE AND DETAILS.
7. PROJECT EL. 0'-0" BASED ON +17.40' CCD (E.G. +14.25' CCD = -3'-1 13/16")

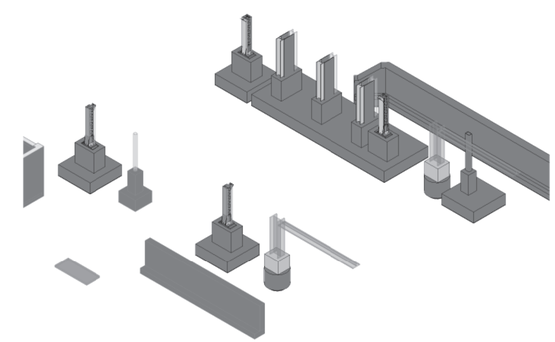

2 3D PERSPECTIVE

DESIGN BY:									
DRAWN BY:									
CHECKED BY:									
APPROVED BY:			01/27/2020	ISSUE FOR BID	EJT	MW	TRM		
CDOT/APPROVED BY:		NO.	DATE	REVISIONS	DES.	DRW.	CHK.	DCCO	CDOT

SIMPSON GUMPERTZ & HEGER
Engineering of Structures and Building Enclosures
Simpson Gumpertz & Heger Inc.
135 South LaSalle Street, Suite 3800
Chicago, Illinois 60603
main: 312.754.7500 fax: 312.754.7501
www.sgh.com

PERKINS+WILL
The Wrigley Building
410 North Michigan Ave.
Suite 1600
Chicago, IL 60611
t 312.755.0770
f 312.755.0775
www.perkinswill.com

CDOT
CHICAGO DEPARTMENT OF TRANSPORTATION
DIVISION OF ENGINEERING

154 N DAMEN AVE - DAMEN GREEN LINE STATION

TOWER/BRIDGE - GRADE PLAN

CDOT PROJECT D-7-135

DATE: 01/27/2020

SPEC. NO.

DRAWING NO. S11-21

REVISION NO.

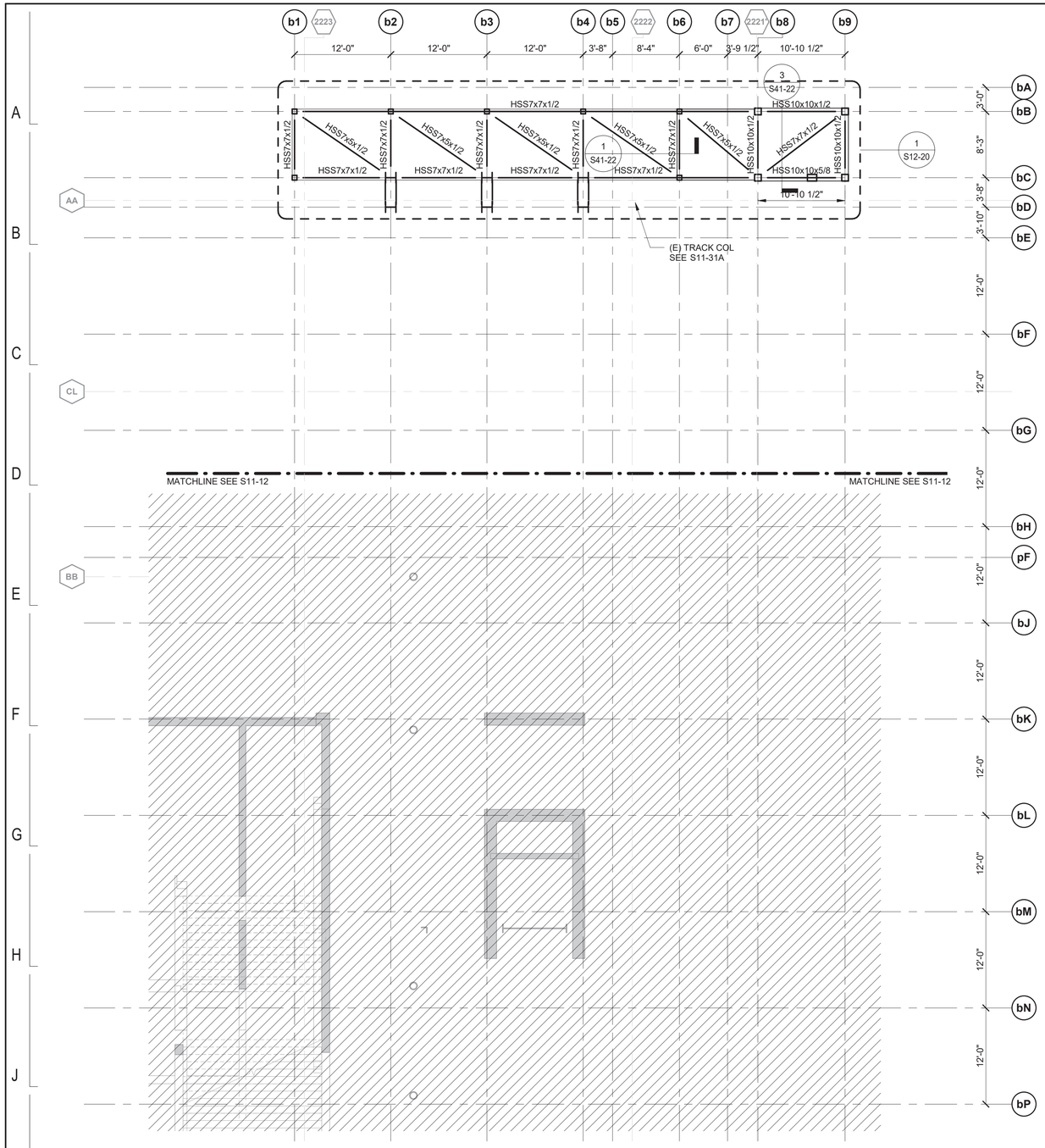

1 TOWER/BRIDGE - LEVEL 1.5 PLAN

1/8" = 1'-0"

FRAMING PLAN NOTES:

1. SEE GENERAL NOTES AND TYPICAL DETAILS FOR ADDITIONAL INFORMATION.
2. FIELD VERIFY EXISTING STRUCTURE DIMENSIONS, ELEVATIONS, AND CONDITIONS.
3. ON PLAN INDICATES SLAB CONSTRUCTION AND SPAN DIRECTION. SEE SLAB NOTES THIS SHEET FOR SLAB INFORMATION.
4. ON PLAN INDICATES CHANGE IN SLAB ELEVATION. SEE SEE ARCHITECTURAL DETAILS FOR LIMITS AND LOCATIONS.
5. ON PLAN INDICATES OPENING THROUGH ROOF CONSTRUCTION. SEE TYPICAL DETAIL FOR SUPPORT REQUIREMENTS. LOCATIONS SHOWN ARE APPROXIMATE AND NOT ALL OPENINGS MAY BE INDICATED. COORDINATE SIZE, QUANTITY, AND LOCATION WITH ALL CONSTRUCTION DOCUMENTS AND REFLECT NECESSARY FRAMING AND REINFORCEMENT IN SHOP DRAWINGS SUBMITTED FOR REVIEW.
6. ALL BEAMS ARE SPACED EQUALLY BETWEEN MAJOR GRIDS UNLESS OTHERWISE NOTED.
7. RD/FD ON PLAN INDICATES FLOOR DRAIN IN SLAB. LOCATIONS ARE SHOWN SCHEMATICALLY SEE ARCHITECTURAL DRAWINGS FOR ADD'L INFO AND SLOPE TO DRAIN. SEE TYPICAL DECK REINFORCEMENT AT OPENINGS DETAILS.
8. L 1 ON PLAN INDICATES L6x4x3/8 ANGLE (LLV) STEEL ANGLE, SEE FOR CONNECTION TO CONCRETE WALLS AND FOR CONNECTION TO CMU.
9. BP - # ON PLAN INDICATES BEARING PLATE, SEE TYPICAL DETAILS.
10. EP-# ON PLAN INDICATES EMBEDDED STEEL PLATE. SEE TYPICAL DETAILS FOR ADDITIONAL INFORMATION. 5/S41-00
11. FOR T/STEEL EL SEE ELEVATIONS S20-21 THROUGH S20-28.
12. CB#X# ON PLAN INDICATES CONCRETE BEAM, SEE SCHEDULE IN TYPICAL DETAILS. 1/S30-08
13. EXTERIOR GIRTS CALLED OUT ON WALL ELEVATIONS
14. ALL COLUMNS ARE THROUGH SLAB ELEVATION UON
15. * DENOTES CONCRETE BEAMS THAT ARE BELOW AND NOT CONNECTED TO LEVEL 02 SLAB
16. ELEVATOR RAIL SUPPORT. COORDINATE LOCATION WITH GLAZING CONTRACTOR AND ELEVATOR MANUFACTURER. SEE ARCHITECTURAL ELEVATIONS.

STEEL BEAM LEGEND

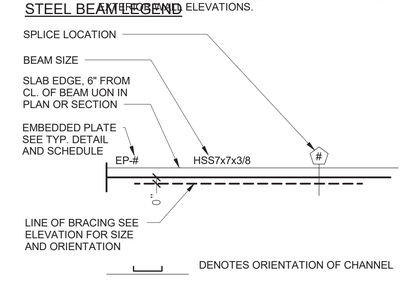

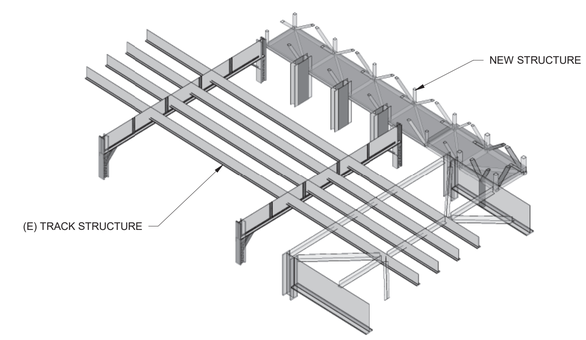

2 3D PERSPECTIVE

DESIGN BY:									
DRAWN BY:									
CHECKED BY:									
APPROVED BY:			01/27/2020	ISSUE FOR BID	EJT	MW	TRM		
CDOT/APPROVED BY:		NO.	DATE	REVISIONS	DES.	DRW.	CHK.	DCCO	CDOT

SIMPSON GUMPERTZ & HEGER
Engineering of Structures and Building Enclosures
Simpson Gumpertz & Heger Inc.
135 South LaSalle Street, Suite 3800
Chicago, Illinois 60603
main: 312.754.7500 fax: 312.754.7501
www.sgh.com

PERKINS+WILL
The Wrigley Building
410 North Michigan Ave.
Suite 1600
Chicago, IL 60611
t 312.755.0770
f 312.755.0775
www.perkinswill.com

CDOT
CHICAGO DEPARTMENT OF TRANSPORTATION
DIVISION OF ENGINEERING

154 N DAMEN AVE - DAMEN GREEN LINE STATION

TOWER/BRIDGE - LEVEL 1.5 FRAMING PLAN

CDOT PROJECT D-7-135 | DATE: 01/27/2020

SPEC. NO.

DRAWING NO. S11-22

REVISION NO.

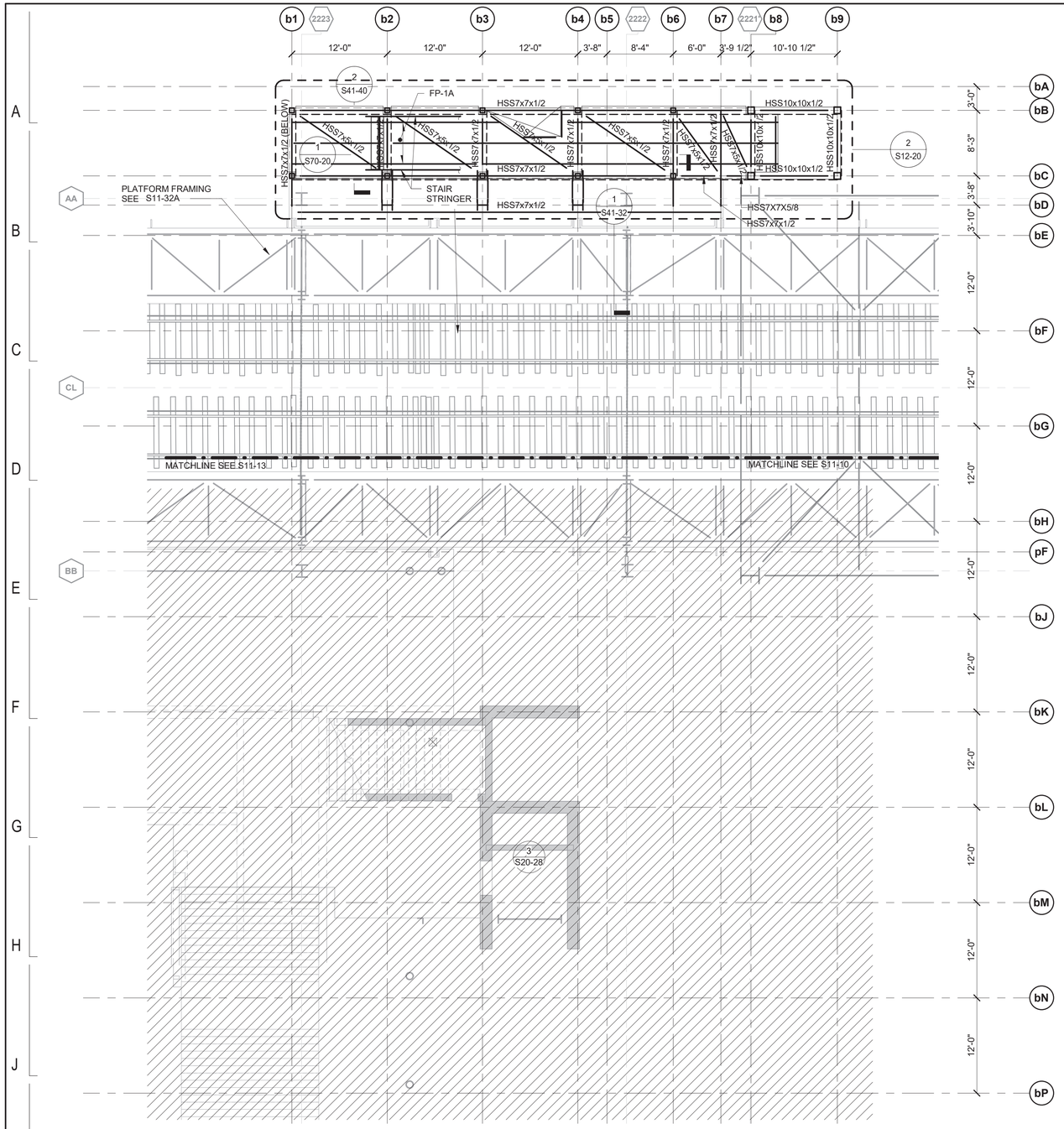

1 TOWER/BRIDGE - LEVEL 2 PLAN

1/8" = 1'-0"

STEEL BEAM LEGEND

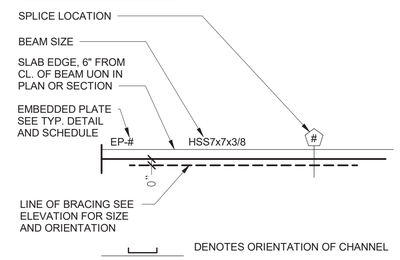

FRAMING PLAN NOTES:

1. SEE GENERAL NOTES AND TYPICAL DETAILS FOR ADDITIONAL INFORMATION.
2. FIELD VERIFY EXISTING STRUCTURE DIMENSIONS, ELEVATIONS, AND CONDITIONS.
3. ON PLAN INDICATES SLAB CONSTRUCTION AND SPAN DIRECTION. SEE SLAB NOTES THIS SHEET FOR SLAB INFORMATION.
4. ON PLAN INDICATES CHANGE IN SLAB ELEVATION. SEE SEE ARCHITECTURAL DETAILS FOR LIMITS AND LOCATIONS.
5. ON PLAN INDICATES OPENING THROUGH ROOF CONSTRUCTION. SEE TYPICAL DETAIL FOR SUPPORT REQUIREMENTS. LOCATIONS SHOWN ARE APPROXIMATE AND NOT ALL OPENINGS MAY BE INDICATED. COORDINATE SIZE, QUANTITY, AND LOCATION WITH ALL CONSTRUCTION DOCUMENTS AND REFLECT NECESSARY FRAMING AND REINFORCEMENT IN SHOP DRAWINGS SUBMITTED FOR REVIEW.
6. ALL BEAMS ARE SPACED EQUALLY BETWEEN MAJOR GRIDS UNLESS OTHERWISE NOTED.
7. RD/FD ON PLAN INDICATES FLOOR DRAIN IN SLAB. LOCATIONS ARE SHOWN SCHEMATICALLY SEE ARCHITECTURAL DRAWINGS FOR ADD'L INFO AND SLOPE TO DRAIN. SEE TYPICAL DECK REINFORCEMENT AT OPENINGS DETAILS.
8. L 1 ON PLAN INDICATES L6x4x3/8 ANGLE (LLV) STEEL ANGLE, SEE FOR CONNECTION TO CONCRETE WALLS AND FOR CONNECTION TO CMU.
9. BP - # ON PLAN INDICATES BEARING PLATE, SEE TYPICAL DETAILS.
10. EP-# ON PLAN INDICATES EMBEDDED STEEL PLATE. SEE TYPICAL DETAILS FOR ADDITIONAL INFORMATION. 5/S41-00
11. FOR T/STEEL EL SEE ELEVATIONS S20-21 THROUGH S20-28.
12. CB#X# ON PLAN INDICATES CONCRETE BEAM, SEE SCHEDULE IN TYPICAL DETAILS. 1/S30-08
13. EXTERIOR GIRTS CALLED OUT ON WALL ELEVATIONS
14. ALL COLUMNS ARE THROUGH SLAB ELEVATION UON
15. * DENOTES CONCRETE BEAMS THAT ARE BELOW AND NOT CONNECTED TO LEVEL 02 SLAB
16. ELEVATOR RAIL SUPPORT. COORDINATE LOCATION WITH GLAZING CONTRACTOR AND ELEVATOR MANUFACTURER. SEE EXTERIOR WALL ELEVATIONS.

FLOOR PLATE TYPE - FP-1A	S41-20
3/8" THICK SLIPNOT 316-L STAINLESS STEEL PLATE WITH SLIPNOT TOP FINISH SUPPORTED ON C9X20 @ 3' OC (MAX). T/PLATE EL +24'-4 7/8"	

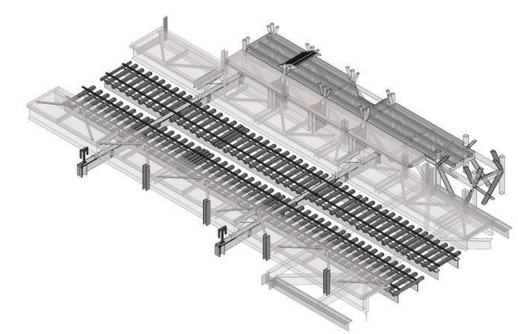

2 3D PERSPECTIVE

DESIGN BY:									
DRAWN BY:									
CHECKED BY:									
APPROVED BY:			01/27/2020	ISSUE FOR BID	EJT	MW	TRM		
CDOT/APPROVED BY:		NO.	DATE	REVISIONS	DES.	DRW.	CHK.	DCCO	CDOT

SIMPSON GUMPERTZ & HEGER
Engineering of Structures and Building Enclosures
Simpson Gumpertz & Heger Inc.
135 South LaSalle Street, Suite 3800
Chicago, Illinois 60603
main: 312.754.7500 fax: 312.754.7501
www.sgh.com

PERKINS+WILL
The Wrigley Building
410 North Michigan Ave.
Suite 1600
Chicago, IL 60611
t 312.755.0770
f 312.755.0775
www.perkinswill.com

CDOT
CHICAGO DEPARTMENT OF TRANSPORTATION
DIVISION OF ENGINEERING

154 N DAMEN AVE - DAMEN GREEN LINE STATION

TOWER/BRIDGE - LEVEL 2 FRAMING PLAN

CDOT PROJECT D-7-135 | DATE: 01/27/2020

SPEC. NO.

DRAWING NO. **S11-23**

REVISION NO.

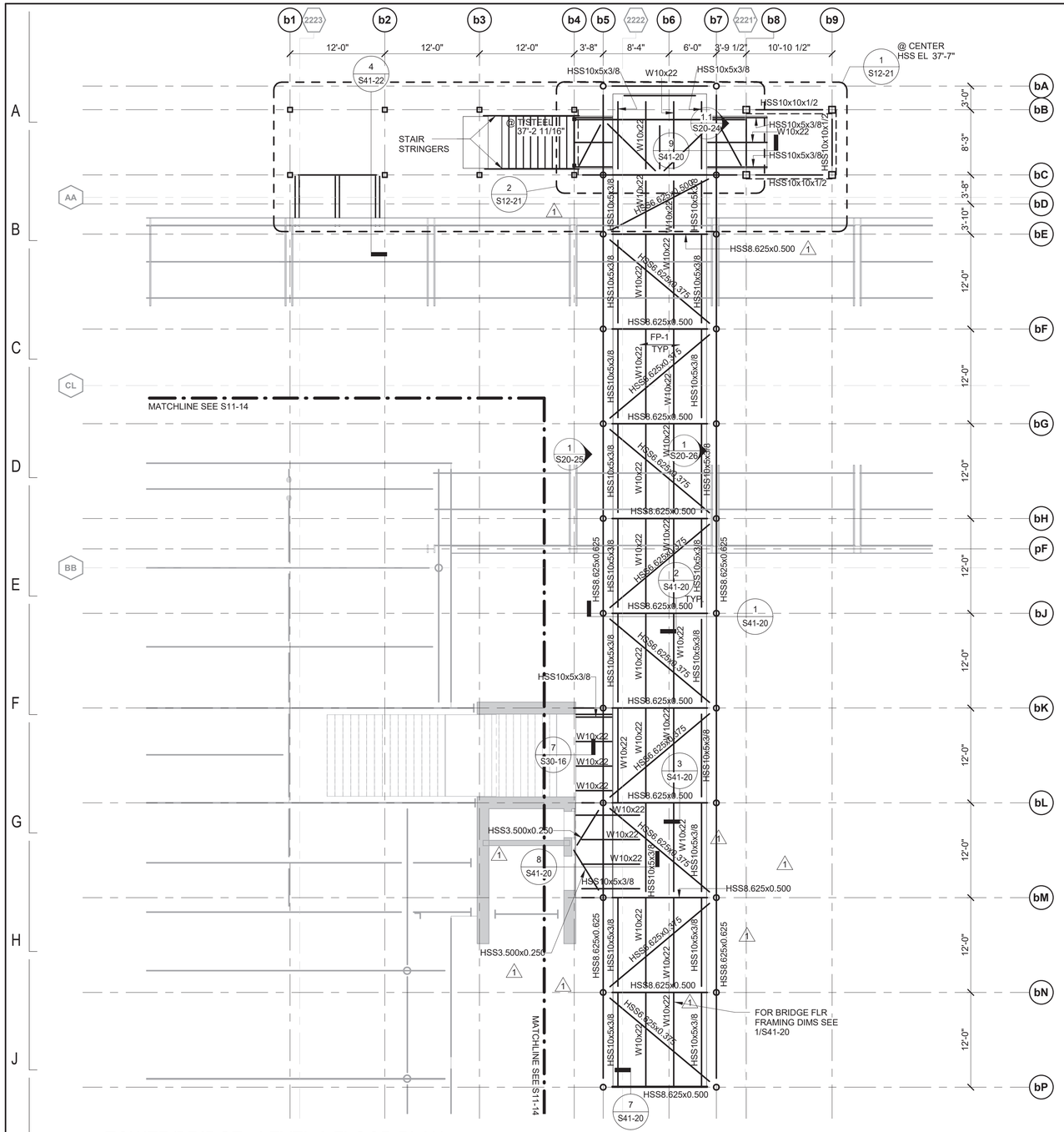

1 TOWER/BRIDGE - LEVEL 3 FLOOR PLAN

1/8" = 1'-0"

STEEL BEAM LEGEND

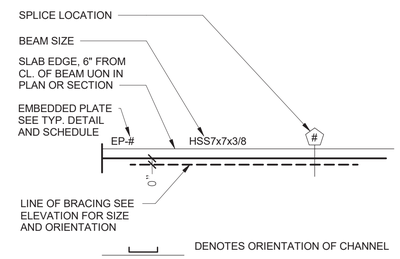

FRAMING PLAN NOTES:

1. SEE GENERAL NOTES AND TYPICAL DETAILS FOR ADDITIONAL INFORMATION.
2. FIELD VERIFY EXISTING STRUCTURE DIMENSIONS, ELEVATIONS, AND CONDITIONS.
3. ON PLAN INDICATES SLAB CONSTRUCTION AND SPAN DIRECTION. SEE SLAB NOTES THIS SHEET FOR SLAB INFORMATION.
4. ON PLAN INDICATES CHANGE IN SLAB ELEVATION. SEE SEE ARCHITECTURAL DETAILS FOR LIMITS AND LOCATIONS.
5. ON PLAN INDICATES OPENING THROUGH ROOF CONSTRUCTION. SEE TYPICAL DETAIL FOR SUPPORT REQUIREMENTS. LOCATIONS SHOWN ARE APPROXIMATE AND NOT ALL OPENINGS MAY BE INDICATED. COORDINATE SIZE, QUANTITY, AND LOCATION WITH ALL CONSTRUCTION DOCUMENTS AND REFLECT NECESSARY FRAMING AND REINFORCEMENT IN SHOP DRAWINGS SUBMITTED FOR REVIEW.
6. ALL BEAMS ARE SPACED EQUALLY BETWEEN MAJOR GRIDS UNLESS OTHERWISE NOTED.
7. RD/FD ON PLAN INDICATES FLOOR DRAIN IN SLAB. LOCATIONS ARE SHOWN SCHEMATICALLY SEE ARCHITECTURAL DRAWINGS FOR ADD'L INFO AND SLOPE TO DRAIN. SEE TYPICAL DECK REINFORCEMENT AT OPENINGS DETAILS.
8. L 1 ON PLAN INDICATES L6x4x3/8 ANGLE (LLV) STEEL ANGLE, SEE FOR CONNECTION TO CONCRETE WALLS AND FOR CONNECTION TO CMU.
9. BP - # ON PLAN INDICATES BEARING PLATE, SEE TYPICAL DETAILS.
10. EP-# ON PLAN INDICATES EMBEDDED STEEL PLATE. SEE TYPICAL DETAILS FOR ADDITIONAL INFORMATION. 5/S41-00
11. FOR T/STEEL EL SEE ELEVATIONS S20-21 THROUGH S20-28.
12. CB#X# ON PLAN INDICATES CONCRETE BEAM, SEE SCHEDULE IN TYPICAL DETAILS. 1/S30-08
13. EXTERIOR GIRTS CALLED OUT ON WALL ELEVATIONS
14. ALL COLUMNS ARE THROUGH SLAB ELEVATION UON
15. * DENOTES CONCRETE BEAMS THAT ARE BELOW AND NOT CONNECTED TO LEVEL 02 SLAB
16. ELEVATOR RAIL SUPPORT. COORDINATE LOCATION WITH GLAZING CONTRACTOR AND ELEVATOR MANUFACTURER. SEE EXTERIOR WALL ELEVATIONS.

EJT 2
3/19/2020

FLOOR PLATE TYPE - FP-1 S41-20
3/8" THICK SLIPNOT 316-L STAINLESS STEEL PLATE WITH SLIP NOT TOP FINISH SUPPORTED ON C10X30 @ 3' OC. T/PLATE EL +39'-1 5/8"

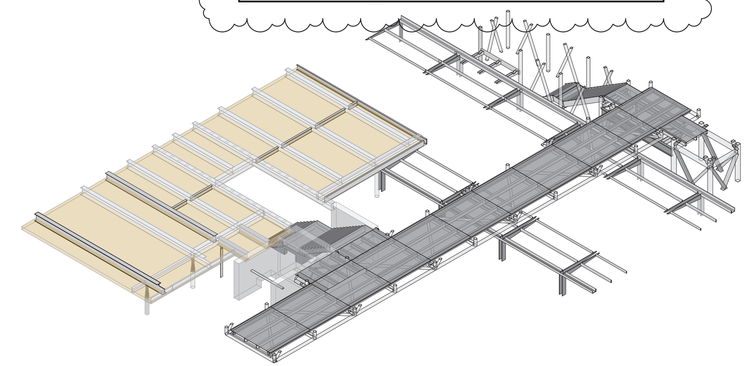

2 3D PERSPECTIVE

DESIGN BY:									
DRAWN BY:									
CHECKED BY:									
APPROVED BY:			03/18/2020	BUILDING PERMIT CORRECTIONS 2	EJT	MW	TRM		
CDOT/APPROVED BY:		NO.	DATE	REVISIONS	DES.	DRW.	CHK.	DCCO	CDOT

STATE OF ILLINOIS TERRY R. McDONNELL 081-005[illegible] LICENSED STRUCTURAL ENGINEER
Exp. 11/30/2020

SIMPSON GUMPERTZ & HEGER
Engineering of Structures and Building Enclosures
Simpson Gumpertz & Heger Inc.
135 South LaSalle Street, Suite 3800
Chicago, Illinois 60603
main: 312.754.7500 fax: 312.754.7501
www.sgh.com

PERKINS+WILL
The Wrigley Building
410 North Michigan Ave.
Suite 1600
Chicago, IL 60611
t 312.755.0770
f 312.755.0775
www.perkinswill.com

CDOT
CHICAGO DEPARTMENT OF TRANSPORTATION
DIVISION OF ENGINEERING

154 N DAMEN AVE - DAMEN GREEN LINE STATION

TOWER/BRIDGE - BRIDGE FLOOR FRAMING PLAN

CDOT PROJECT D-7-135 | DATE: 01/27/2020

SPEC. NO.

DRAWING NO. **S11-24**

REVISION NO.

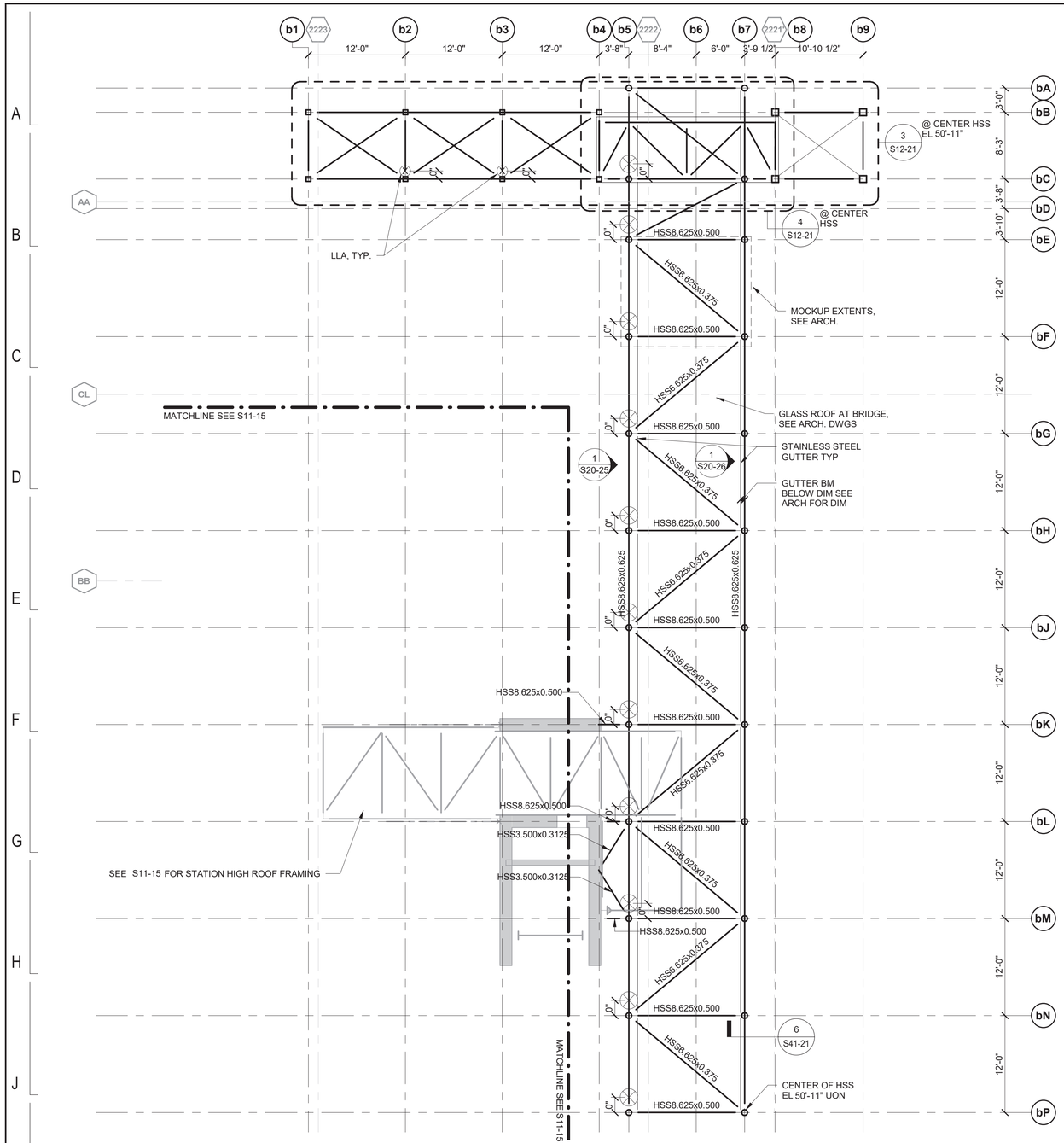

1 TOWER/BRIDGE - LEVEL 4 ROOF PLAN
1/8" = 1'-0"

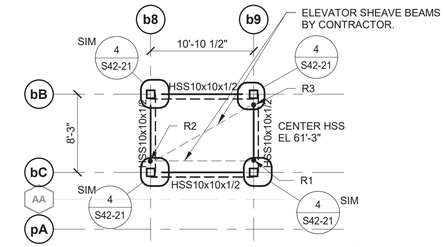

1. R1, R2, AND R3 ARE ELEVATOR SHEAVE BEAM REACTIONS ASSUMED FOR DESIGN. IF ACTUAL LOADS EXCEED THOSE LISTED, THE CONTRACTOR'S ENGINEER SHALL EVALUATE THE STRUCTURE FOR THE FINAL LOADING AND SUBMIT CALCULATIONS TO THE COMMISSIONER FOR REVIEW. LOADS LISTED HERE ARE DOUBLED TO ACCOUNT FOR IMPACT.
R1 = 14,000 LB
R2 = 42,000 LB
R3 = 10,000 LB

2 TOWER/BRIDGE - LEVEL 4.5 PLAN
1/8" = 1'-0"

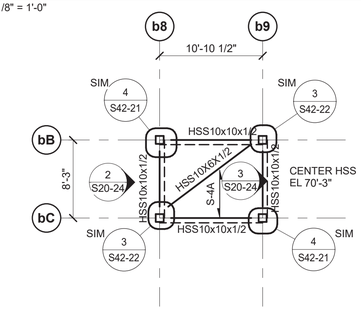

3 TOWER/BRIDGE - LEVEL 4.8 PLAN
1/8" = 1'-0"

STEEL BEAM LEGEND

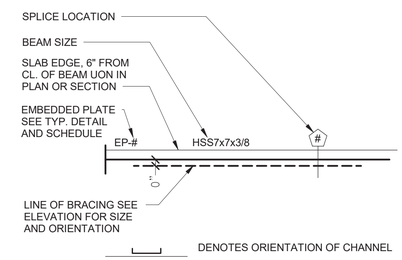

FRAMING PLAN NOTES:

1. SEE GENERAL NOTES AND TYPICAL DETAILS FOR ADDITIONAL INFORMATION.
2. FIELD VERIFY EXISTING STRUCTURE DIMENSIONS, ELEVATIONS, AND CONDITIONS.
3. ON PLAN INDICATES SLAB CONSTRUCTION AND SPAN DIRECTION. SEE SLAB NOTES THIS SHEET FOR SLAB INFORMATION.
4. ON PLAN INDICATES CHANGE IN SLAB ELEVATION. SEE SEE ARCHITECTURAL DETAILS FOR LIMITS AND LOCATIONS.
5. ON PLAN INDICATES OPENING THROUGH ROOF CONSTRUCTION. SEE TYPICAL DETAIL FOR SUPPORT REQUIREMENTS. LOCATIONS SHOWN ARE APPROXIMATE AND NOT ALL OPENINGS MAY BE INDICATED. COORDINATE SIZE, QUANTITY, AND LOCATION WITH ALL CONSTRUCTION DOCUMENTS AND REFLECT NECESSARY FRAMING AND REINFORCEMENT IN SHOP DRAWINGS SUBMITTED FOR REVIEW.
6. ALL BEAMS ARE SPACED EQUALLY BETWEEN MAJOR GRIDS UNLESS OTHERWISE NOTED.
7. RD/FD ON PLAN INDICATES FLOOR DRAIN IN SLAB. LOCATIONS ARE SHOWN SCHEMATICALLY SEE ARCHITECTURAL DRAWINGS FOR ADD'L INFO AND SLOPE TO DRAIN. SEE TYPICAL DECK REINFORCEMENT AT OPENINGS DETAILS.
8. L 1 ON PLAN INDICATES L6x4x3/8 ANGLE (LLV) STEEL ANGLE, SEE FOR CONNECTION TO CONCRETE WALLS AND FOR CONNECTION TO CMU.
9. BP - # ON PLAN INDICATES BEARING PLATE, SEE TYPICAL DETAILS.
10. EP-# ON PLAN INDICATES EMBEDDED STEEL PLATE. SEE TYPICAL DETAILS FOR ADDITIONAL INFORMATION. 5/S41-00
11. FOR T/STEEL EL SEE ELEVATIONS S20-21 THROUGH S20-28.
12. CB#X# ON PLAN INDICATES CONCRETE BEAM, SEE SCHEDULE IN TYPICAL DETAILS. 1/S30-08
13. EXTERIOR GIRTS CALLED OUT ON WALL ELEVATIONS
14. ALL COLUMNS ARE THROUGH SLAB ELEVATION UON
15. * DENOTES CONCRETE BEAMS THAT ARE BELOW AND NOT CONNECTED TO LEVEL 02 SLAB
16. ELEVATOR RAIL SUPPORT. COORDINATE LOCATION WITH GLAZING CONTRACTOR AND ELEVATOR MANUFACTURER. SEE EXTERIOR WALL ELEVATIONS.

SLAB TYPE - S-4A
3" - 18 GA. (MIN) GALVANIZED STEEL ROOF DECK, TYPE N, PLACED WITH NARROW RIBS DOWN OVER STEEL FRAMING. DECK GAUGE PROVIDED IS MIN. REQUIRED FOR STRUCTURAL LOADS. CONTRACTOR TO INCREASE GAUGE, IF REQUIRED, TO MEET FM GLOBAL REQUIREMENTS OF ENTIRE ROOF ASSEMBLY.

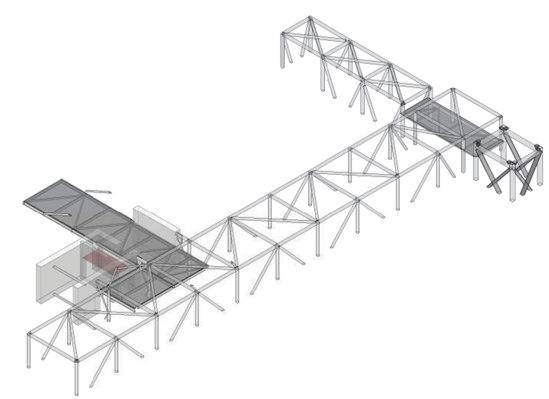

4 3D PERSPECTIVE

DESIGN BY:									
DRAWN BY:									
CHECKED BY:									
APPROVED BY:			01/27/2020	ISSUE FOR BID	EJT	MW	TRM		
CDOT/APPROVED BY:		NO.	DATE	REVISIONS	DES.	DRW.	CHK.	DCCO	CDOT

SIMPSON GUMPERTZ & HEGER
Engineering of Structures and Building Enclosures
Simpson Gumpertz & Heger Inc.
135 South LaSalle Street, Suite 3800
Chicago, Illinois 60603
main: 312.754.7500 fax: 312.754.7501
www.sgh.com

PERKINS+WILL
The Wrigley Building
410 North Michigan Ave.
Suite 1600
Chicago, IL 60611
t 312.755.0770
f 312.755.0775
www.perkinswill.com

CDOT
CHICAGO DEPARTMENT OF TRANSPORTATION
DIVISION OF ENGINEERING

154 N DAMEN AVE - DAMEN GREEN LINE STATION

TOWER/BRIDGE - BRIDGE ROOF FRAMING PLAN

CDOT PROJECT D-7-135 | DATE: 01/27/2020

SPEC. NO.

DRAWING NO. **S11-25**

REVISION NO.

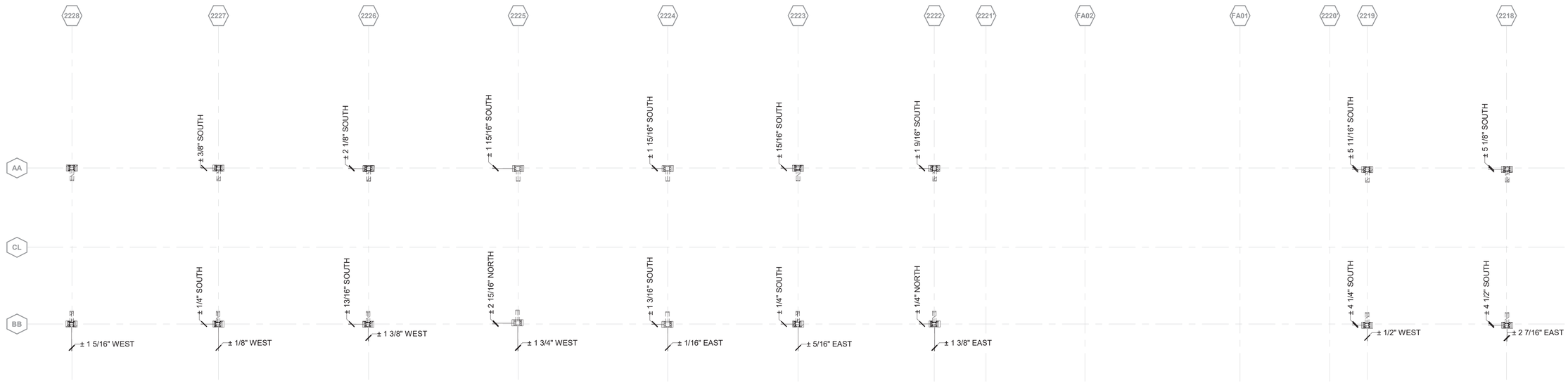

1 PLATFORM - EXISTING CONDITION PLAN

1/16" = 1'-0"

NOTES:

1. EXISTING CONDITIONS PLAN PROVIDED FOR REFERENCE TO IDENTIFY APPROXIMATE PLAN OFFSET DIMENSIONS OF EXISTING COLUMNS FROM EXISTING GRIDLINES BASED ON SURVEY DURING DESIGN PHASE.
2. CONTRACTOR IS SOLELY RESPONSIBLE FOR SURVEYING EXISTING CONDITIONS AT STAGES OF CONSTRUCTION APPROPRIATE FOR THE WORK.
3. FOR COLUMN REPLACEMENT AND PLATFORM INSTALLATION WORK, CONTRACTOR SHALL ACCOUNT FOR TRACK AND COLUMN MOVEMENT AND FOUNDATION SETTLEMENT IN ADDITION TO GEOMETRIC AND MATERIAL TOLERANCES IN REFERENCED SPECIFICATIONS (E.G. ASTM A6 AND ACI 117).
4. PERIODIC SURVEYING OF THE EXISTING STRUCTURE DURING THE DESIGN PHASE INDICATED TOP OF COLUMN MOVEMENT UP TO 1" UNDER NORMAL SERVICE CONDITIONS.
5. SUGGESTED COLUMN REPLACEMENT STRATEGY SHOWN IN SD DRAWINGS.

FOR REFERENE ONLY

DESIGN BY:									
DRAWN BY:									
CHECKED BY:									
APPROVED BY:			01/27/2020	ISSUE FOR BID	CJB	MW	TRM		
CDOT/APPROVED BY:		NO.	DATE	REVISIONS	DES.	DRW.	CHK.	DCCO	CDOT

SIMPSON GUMPERTZ & HEGER
Engineering of Structures and Building Enclosures
Simpson Gumpertz & Heger Inc.
135 South LaSalle Street, Suite 3800
Chicago, Illinois 60603
main: 312.754.7500 fax: 312.754.7501
www.sgh.com

PERKINS+WILL
The Wrigley Building
410 North Michigan Ave.
Suite 1600
Chicago, IL 60611
t 312.755.0770
f 312.755.0775
www.perkinswill.com

CDOT
CHICAGO DEPARTMENT OF TRANSPORTATION
DIVISION OF ENGINEERING

154 N DAMEN AVE - DAMEN GREEN LINE STATION

PLATFORM - EXISTING CONDITIONS PLAN

CDOT PROJECT D-7-135

DATE: 01/27/2020

SPEC. NO.

DRAWING NO. **S11-30**

REVISION NO.

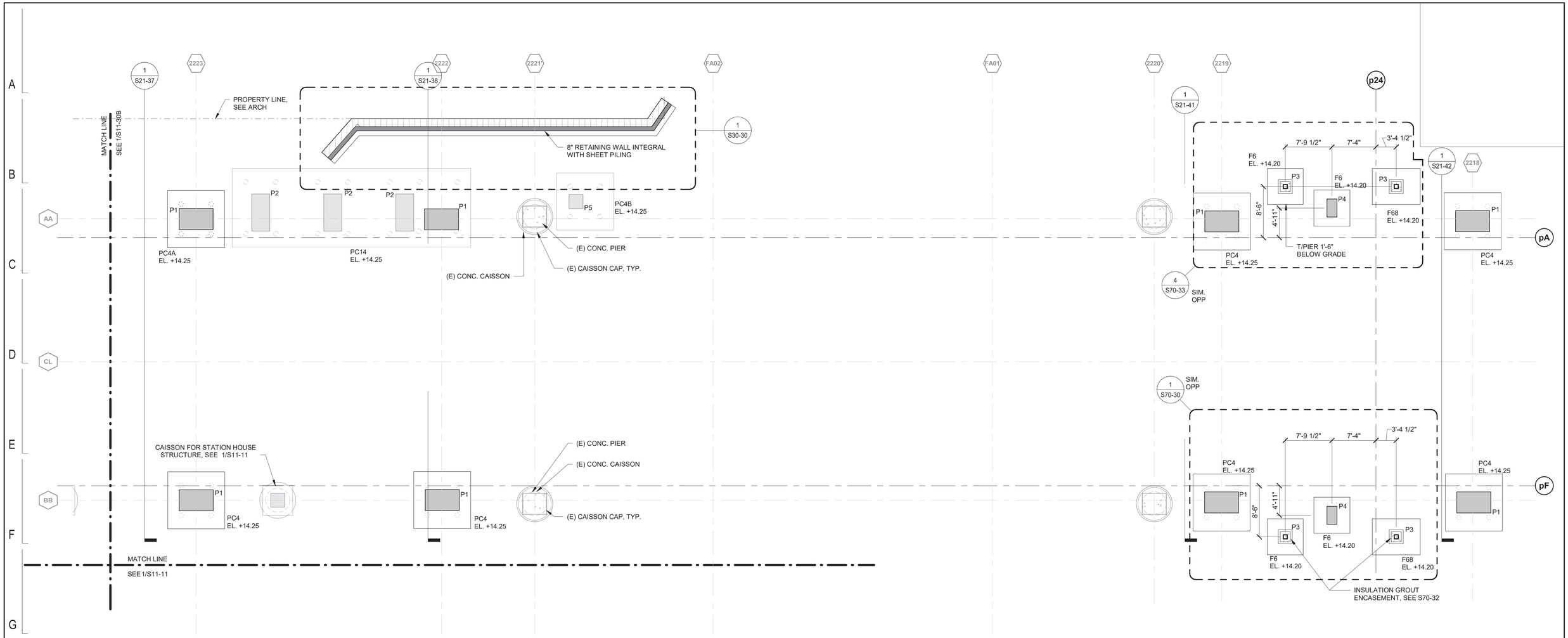

1 FOUNDATION PLAN - EAST

1/8" = 1'-0"

FOUNDATION PLAN NOTES:

1. SEE GENERAL NOTES, TYPICAL DETAILS, AND SPECIFICATIONS FOR ADDITIONAL INFORMATION.
2. FIELD VERIFY EXISTING STRUCTURE DIMENSIONS, ELEVATIONS, AND CONDITIONS.
3. SEE ADVANCED UNDERGROUND PACKAGE DATED 11/09/2018 FOR DAMEN GREEN LINE STATION, CDOT PROJECT D-7-135A FOR ADDITIONAL INFORMATION ON EXISTING MICROPILES.
4. SEE S30-04 FOR MICROPILE DETAILS AND PILE CAP SCHEDULE.
5. SEE S30-04 FOR PILE CAP SCHEDULE AND LAYOUTS.
6. SEE S30-05 FOR FOOTING/PIER SCHEDULE AND DETAILS.
7. PROJECT EL. 0'-0" BASED ON +17.40' CCD (E.G. +14.25' CCD = -3'-1 13/16")

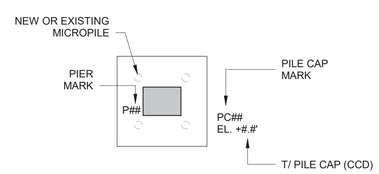

NOTES:
1. TOP OF PIER ELEVATION = 2'-3"± ABOVE GRADE, UON.
2. SEE CIVIL DWGS FOR PROJECT GRADE ELEVATIONS.

PILE & PILE CAP LEGEND

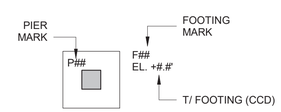

NOTES:
1. TOP OF PIER ELEVATION = 2'-3"± ABOVE GRADE, UON.
2. SEE CIVIL DWGS FOR PROJECT GRADE ELEVATIONS.

LEGEND - FOOTING AND PIER

DESIGN BY:									
DRAWN BY:									
CHECKED BY:									
APPROVED BY:			01/27/2020	ISSUE FOR BID	CJB	MW	TRM		
CDOT/APPROVED BY:		NO.	DATE	REVISIONS	DES.	DRW.	CHK.	DCCO	CDOT

SIMPSON GUMPERTZ & HEGER
Engineering of Structures and Building Enclosures
Simpson Gumpertz & Heger Inc.
135 South LaSalle Street, Suite 3800
Chicago, Illinois 60603
main: 312.754.7500 fax: 312.754.7501
www.sgh.com

PERKINS+WILL
The Wrigley Building
410 North Michigan Ave.
Suite 1600
Chicago, IL 60611
t 312.755.0770
f 312.755.0775
www.perkinswill.com

CDOT
CHICAGO DEPARTMENT OF TRANSPORTATION
DIVISION OF ENGINEERING

154 N DAMEN AVE - DAMEN GREEN LINE STATION

PLATFORM - FOUNDATION PLAN - EAST

CDOT PROJECT D-7-135 | DATE: 01/27/2020

SPEC. NO.

DRAWING NO. S11-30A

REVISION NO.

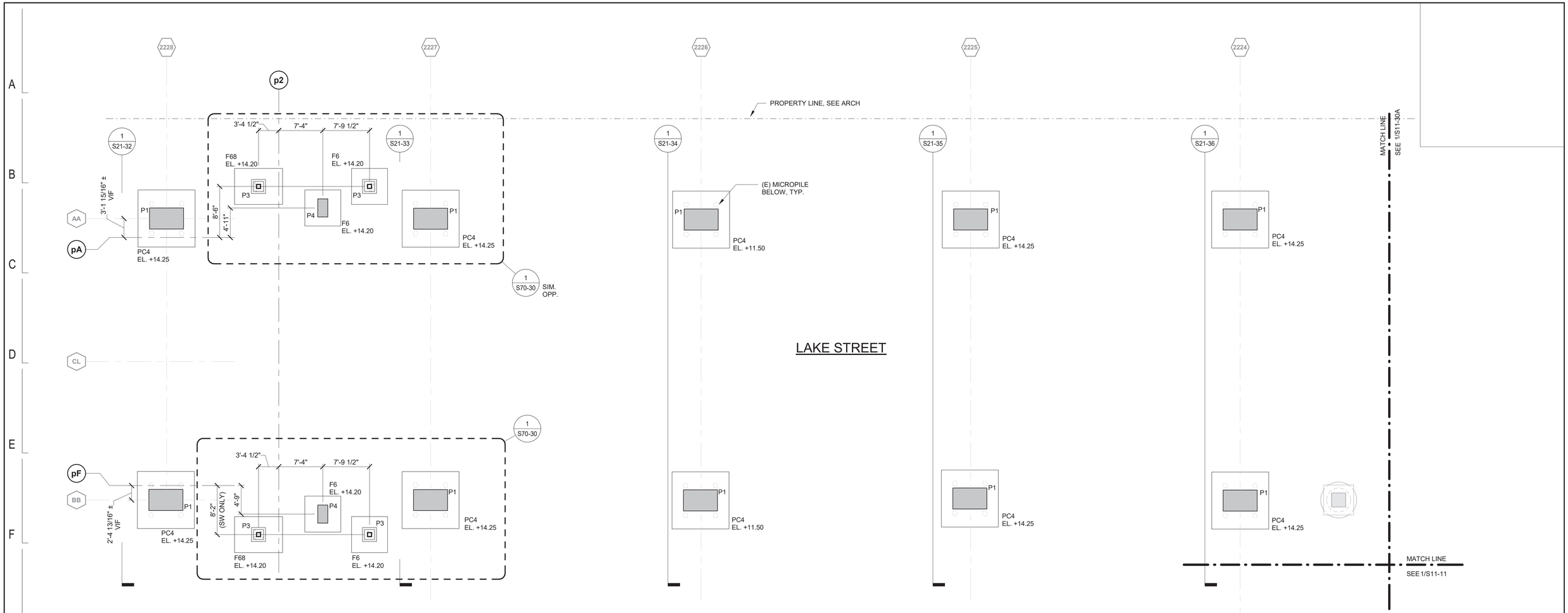

1 FOUNDATION PLAN - WEST

1/8" = 1'-0"

FOUNDATION PLAN NOTES:

1. SEE GENERAL NOTES, TYPICAL DETAILS, AND SPECIFICATIONS FOR ADDITIONAL INFORMATION.
2. FIELD VERIFY EXISTING STRUCTURE DIMENSIONS, ELEVATIONS, AND CONDITIONS.
3. SEE ADVANCED UNDERGROUND PACKAGE DATED 11/09/2018 FOR DAMEN GREEN LINE STATION, CDOT PROJECT D-7-135A FOR ADDITIONAL INFORMATION ON EXISTING MICROPILES.
4. SEE S30-04 FOR MICROPILE DETAILS AND PILE CAP SCHEDULE.
5. SEE S30-04 FOR PILE CAP SCHEDULE AND LAYOUTS.
6. SEE S30-05 FOR FOOTING/PIER SCHEDULE AND DETAILS.
7. PROJECT EL. 0'-0" BASED ON +17.40' CCD (E.G. +14.25' CCD = -3'-1 13/16")

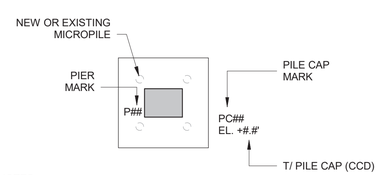

NOTES:
1. TOP OF PIER ELEVATION = 2'-3"± ABOVE GRADE, UON.
2. SEE CIVIL DWGS FOR PROJECT GRADE ELEVATIONS.

PILE & PILE CAP LEGEND

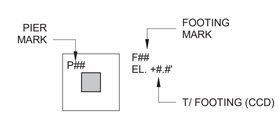

NOTES:
1. TOP OF PIER ELEVATION = 2'-3"± ABOVE GRADE, UON.
2. SEE CIVIL DWGS FOR PROJECT GRADE ELEVATIONS.

LEGEND - FOOTING AND PIER

DESIGN BY:									
DRAWN BY:									
CHECKED BY:									
APPROVED BY:			01/27/2020	ISSUE FOR BID	CJB	MW	TRM		
CDOT/APPROVED BY:		NO.	DATE	REVISIONS	DES.	DRW.	CHK.	DCCO	CDOT

SIMPSON GUMPERTZ & HEGER
Engineering of Structures and Building Enclosures
Simpson Gumpertz & Heger Inc.
135 South LaSalle Street, Suite 3800
Chicago, Illinois 60603
main: 312.754.7500 fax: 312.754.7501
www.sgh.com

PERKINS+WILL
The Wrigley Building
410 North Michigan Ave.
Suite 1600
Chicago, IL 60611
t 312.755.0770
f 312.755.0775
www.perkinswill.com

CDOT
CHICAGO DEPARTMENT OF TRANSPORTATION
DIVISION OF ENGINEERING

154 N DAMEN AVE - DAMEN GREEN LINE STATION

PLATFORM - FOUNDATION PLAN - WEST

CDOT PROJECT D-7-135 | DATE: 01/27/2020

SPEC. NO.

DRAWING NO. **S11-30B**

REVISION NO.

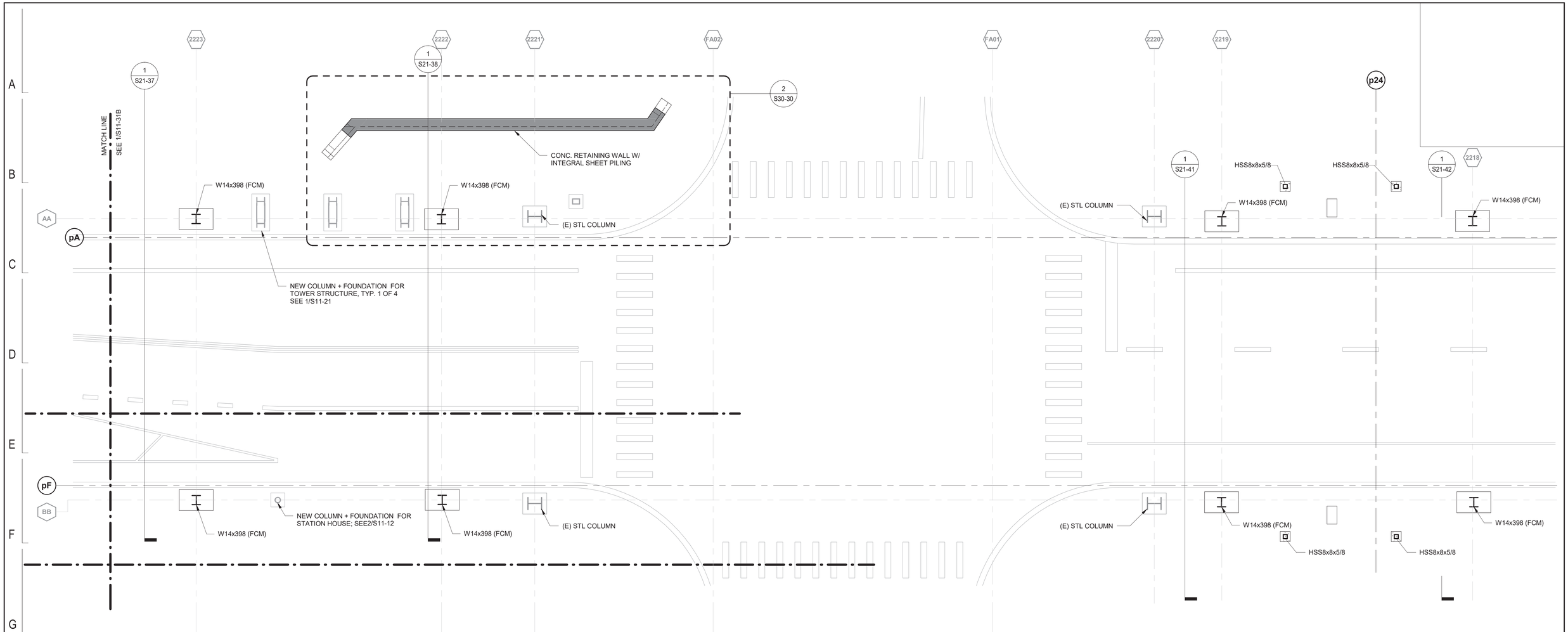

1 GRADE PLAN - EAST

1/8" = 1'-0"

PLAN NOTES:

1. SEE GENERAL NOTES, TYPICAL DETAILS, AND SPECIFICATIONS FOR ADDITIONAL INFORMATION.
2. SITE BACKGROUND SHOWN FOR REFERENCE ONLY; SEE CIVIL DRAWINGS.
3. FIELD VERIFY EXISTING STRUCTURE DIMENSIONS, ELEVATIONS, AND CONDITIONS.
4. SEE ADVANCED UNDERGROUND PACKAGE DATED 11/09/2018 FOR DAMEN GREEN LINE STATION, CDOT PROJECT D-7-135A FOR ADDITIONAL INFORMATION ON EXISTING MICROPILES.
5. SEE S30-05 FOR FOOTING / PIER SCHEDULES AND DETAILS.
6. PROJECT EL. 0'-0" BASED ON +17.40' CCD (E.G. +14.25' CCD = -3'-1 13/16")

DESIGN BY:									
DRAWN BY:									
CHECKED BY:									
APPROVED BY:			01/27/2020	ISSUE FOR BID	CJB	MW	TRM		
CDOT/APPROVED BY:		NO.	DATE	REVISIONS	DES.	DRW.	CHK.	DCCO	CDOT

SIMPSON GUMPERTZ & HEGER
Engineering of Structures and Building Enclosures
Simpson Gumpertz & Heger Inc.
135 South LaSalle Street, Suite 3800
Chicago, Illinois 60603
main: 312.754.7500 fax: 312.754.7501
www.sgh.com

PERKINS+WILL
The Wrigley Building
410 North Michigan Ave.
Suite 1600
Chicago, IL 60611
t 312.755.0770
f 312.755.0775
www.perkinswill.com

CDOT
CHICAGO DEPARTMENT OF TRANSPORTATION
DIVISION OF ENGINEERING

154 N DAMEN AVE - DAMEN GREEN LINE STATION

PLATFORM - GRADE - EAST

CDOT PROJECT D-7-135

DATE: 01/27/2020

SPEC. NO.

DRAWING NO. **S11-31A**

REVISION NO.

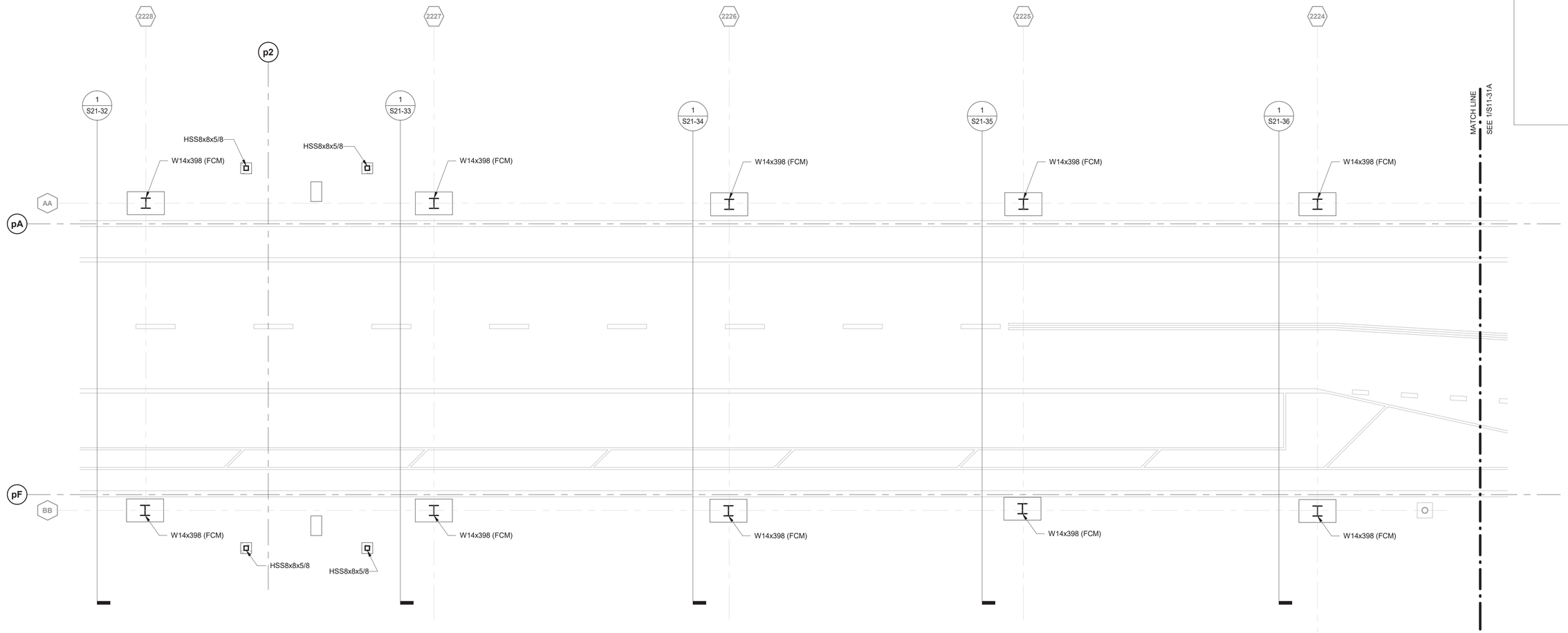

1 GRADE PLAN - WEST

1/8" = 1'-0"

PLAN NOTES:

1. SEE GENERAL NOTES, TYPICAL DETAILS, AND SPECIFICATIONS FOR ADDITIONAL INFORMATION.
2. SITE BACKGROUND SHOWN FOR REFERENCE ONLY; SEE CIVIL DRAWINGS.
3. FIELD VERIFY EXISTING STRUCTURE DIMENSIONS, ELEVATIONS, AND CONDITIONS.
4. SEE ADVANCED UNDERGROUND PACKAGE DATED 11/09/2018 FOR DAMEN GREEN LINE STATION, CDOT PROJECT D-7-135A FOR ADDITIONAL INFORMATION ON EXISTING MICROPILES.
5. SEE S30-05 FOR FOOTING / PIER SCHEDULES AND DETAILS.
6. PROJECT EL. 0'-0" BASED ON +17.40' CCD (E.G. +14.25' CCD = -3'-1 13/16")

DESIGN BY:									
DRAWN BY:									
CHECKED BY:									
APPROVED BY:			01/27/2020	ISSUE FOR BID	CJB	MW	TRM		
CDOT/APPROVED BY:		NO.	DATE	REVISIONS	DES.	DRW.	CHK.	DCCO	CDOT

SIMPSON GUMPERTZ & HEGER
Engineering of Structures and Building Enclosures
Simpson Gumpertz & Heger Inc.
135 South LaSalle Street, Suite 3800
Chicago, Illinois 60603
main: 312.754.7500 fax: 312.754.7501
www.sgh.com

PERKINS+WILL
The Wrigley Building
410 North Michigan Ave.
Suite 1600
Chicago, IL 60611
t 312.755.0770
f 312.755.0775
www.perkinswill.com

CDOT
CHICAGO DEPARTMENT OF TRANSPORTATION
DIVISION OF ENGINEERING

154 N DAMEN AVE - DAMEN GREEN LINE STATION

PLATFORM - GRADE - WEST

CDOT PROJECT D-7-135 | DATE: 01/27/2020

SPEC. NO.

DRAWING NO. **S11-31B**

REVISION NO.

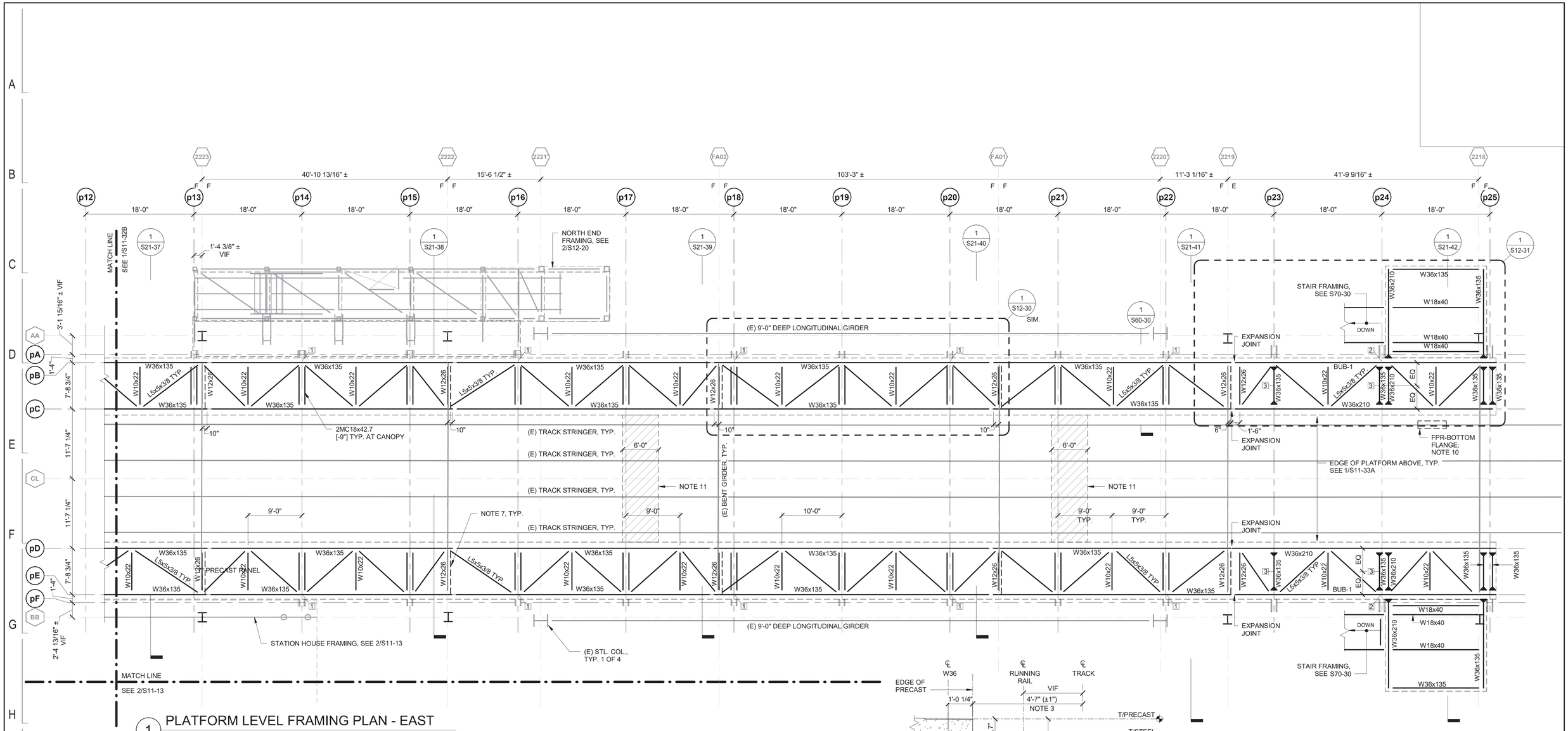

1 PLATFORM LEVEL FRAMING PLAN - EAST

1/8" = 1'-0"

PLATFORM FRAMING PLAN NOTES:

1. DIMENSIONS INDICATED FOR EXISTING STRUCTURE ARE TO BE VERIFIED IN THE FIELD.
2. SEE SHEET G30-00 FOR GRID DIMENSIONS.
3. SEE PLATFORM STEEL ALIGNMENT DETAIL THIS SHEET FOR PLATFORM T/STEEL. ELEVATION DIFFERENCE SHOWN AS [±X'-XX"] INDICATES T/STEEL FOR STRUCTURAL FRAMING WITH RESPECT TO THIS ELEVATION. T/STEEL ELEVATION REFERS TO THE TOP OF STRUCTURAL STEEL SHAPES, NOT THE TOP OF STRUCTURAL STEEL SHIMS.
4. 'E' AND 'F' INDICATE EXPANSION AND FIXED CONNECTIONS, RESPECTIVELY, IN EXISTING TRACK-SUPPORTING STRUCTURE.
5. SEE S70-30s FOR STAIR PLANS, SECTIONS, AND DETAILS (4 LOCATIONS TYP.).
6. SEE S80-30s FOR GUARDRAIL CONNECTION PLAN AND DETAILS.
7. ——— ON PLAN INDICATES CARBON STEEL TIE ROD CROSS BRACING.

NOTES (CONT):

8. # ON PLAN INDICATES BEAM WEB PENETRATION. SEE 4/S41-35 COORDINATE LOCATIONS WITH PLUMBING DRAWINGS.
9. BUB-# ON PLAN INDICATES BUILT-UP BEAM (BUB). SEE S41-35
10. FPR ON PLAN INDICATES TRACK STRINGER FLANGE PLATE REPAIR, SEE SHEET S21-31
11. ON PLAN INDICATES EXTENT OF GALV. CORRUGATED STEEL PANEL CANOPY OVER CROSSWALK. SEE CT DWGS FOR DETAILS. SUPERIMPOSED LOAD ON TRACK STRUCTURE = 700 LBF (DL+LL) AT EACH HANGER (2 PER TRACK STRINGER AT EACH LOCATION SHOWN).

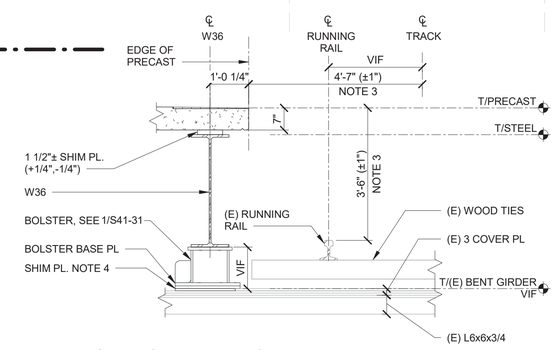

PLATFORM STEEL ALIGNMENT

NOTES:

1. SEE G30-00, CT-002, AND CT-008 FOR ADDITIONAL INFORMATION.
2. PRIOR TO LOCATING PROJECT GIRDLINES AND ELEVATIONS, CONTRACTOR SHALL SURVEY THE EXISITNG RAIL AND TRACK STRUCTURE, AFTER TRACK COLUMN REPLACEMENT, TO VERIFY DIMENSIONS AND ELEVATIONS PROVIDED.
3. FABRICATE AND ERECT PLATFORM STEEL FRAMING TO MAINTAIN DIMENSIONS TO CENTERLINE OF TRACK AND TOP OF RUNNING RAIL. REFERENCE TRACK SURVEY FOR RAIL ELEVATIONS. SEE NOTE 1.
4. PROVIDE ADDITIONAL SHIM PLATES (1" MAX) AS NECESSARY TO MAINTAIN T/STEEL & T/PRECAST ELEVATIONS.

DESIGN BY:									
DRAWN BY:									
CHECKED BY:									
APPROVED BY:			01/27/2020	ISSUE FOR BID	CJB	MW	TRM		
CDOT/APPROVED BY:		NO.	DATE	REVISIONS	DES.	DRW.	CHK.	DCCO	CDOT

SIMPSON GUMPERTZ & HEGER
Engineering of Structures and Building Enclosures
Simpson Gumpertz & Heger Inc.
135 South LaSalle Street, Suite 3800
Chicago, Illinois 60603
main: 312.754.7500 fax: 312.754.7501
www.sgh.com

PERKINS+WILL
The Wrigley Building
410 North Michigan Ave.
Suite 1600
Chicago, IL 60611
t 312.755.0770
f 312.755.0775
www.perkinswill.com

CDOT
CHICAGO DEPARTMENT OF TRANSPORTATION
DIVISION OF ENGINEERING

154 N DAMEN AVE - DAMEN GREEN LINE STATION

PLATFORM - PLATFORM FRAMING - EAST

CDOT PROJECT D-7-135 | DATE: 01/27/2020

SPEC. NO.

DRAWING NO. **S11-32A**

REVISION NO.

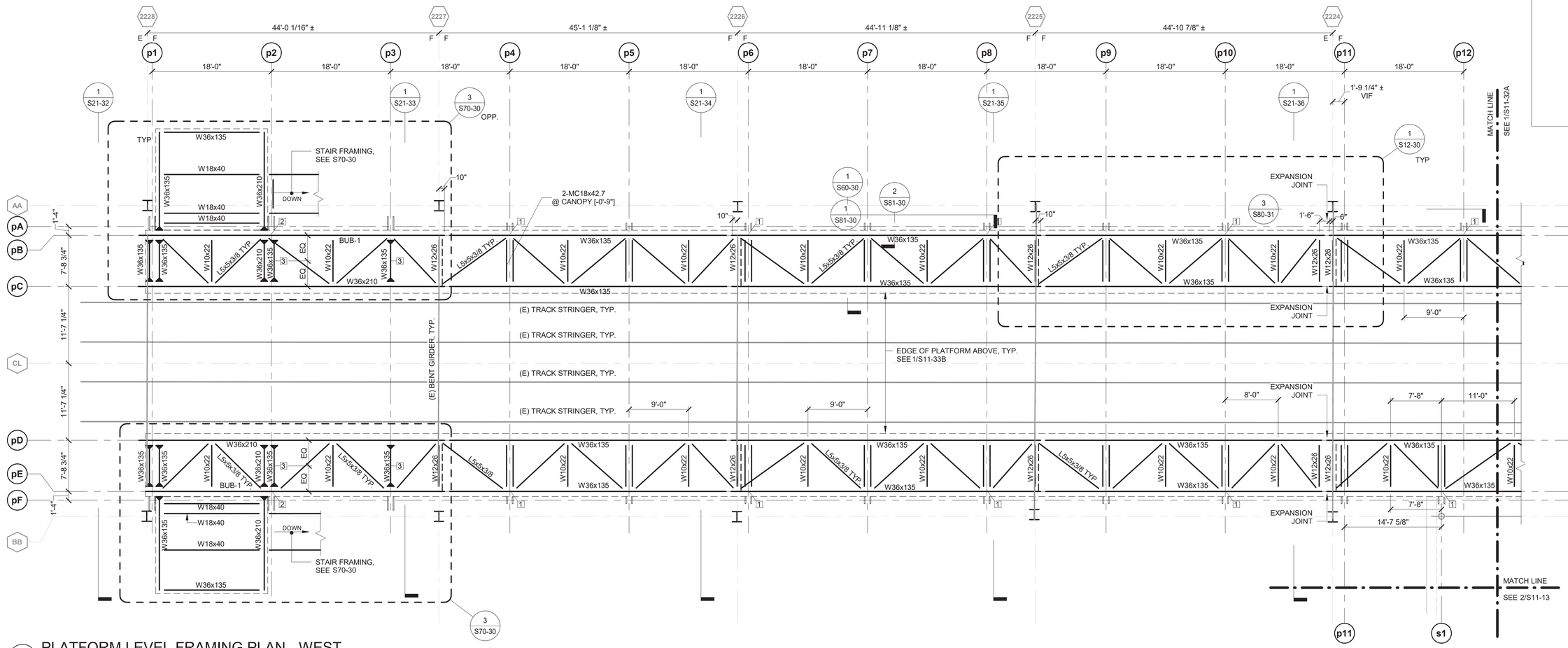

1 PLATFORM LEVEL FRAMING PLAN - WEST

1/8" = 1'-0"

PLATFORM FRAMING PLAN NOTES:

1. DIMENSIONS INDICATED FOR EXISTING STRUCTURE ARE TO BE VERIFIED IN THE FIELD.
2. SEE SHEET G30-00 FOR GRID DIMENSIONS.
3. SEE PLATFORM STEEL ALIGNMENT DETAIL THIS SHEET FOR PLATFORM T/STEEL. ELEVATION DIFFERENCE SHOWN AS [±X'-XX"] INDICATES T/STEEL FOR STRUCTURAL FRAMING WITH RESPECT TO THIS ELEVATION. T/STEEL ELEVATION REFERS TO THE TOP OF STRUCTURAL STEEL SHAPES, NOT THE TOP OF STRUCTURAL STEEL SHIMS.
4. 'E' AND 'F' INDICATE EXPANSION AND FIXED CONNECTIONS, RESPECTIVELY, IN EXISTING TRACK-SUPPORTING STRUCTURE.
5. SEE S70-30s FOR STAIR PLANS, SECTIONS, AND DETAILS (4 LOCATIONS TYP.).
6. SEE S80-30s FOR GUARDRAIL CONNECTION PLAN AND DETAILS.
7. ON PLAN INDICATES CARBON STEEL TIE ROD CROSS BRACING.

NOTES (CONT):

8. # ON PLAN INDICATES BEAM WEB PENETRATION. SEE 4/S41-35 COORDINATE LOCATIONS WITH PLUMBING DRAWINGS.
9. BUB-# ON PLAN INDICATES BUILT-UP BEAM (BUB). SEE S41-35
10. FPR ON PLAN INDICATES TRACK STRINGER FLANGE PLATE REPAIR, SEE SHEET S21-31
11. ON PLAN INDICATES EXTENT OF GALV. CORRUGATED STEEL PANEL CANOPY OVER CROSSWALK. SEE CT DWGS FOR DETAILS. SUPERIMPOSED LOAD ON TRACK STRUCTURE = 700 LBF (DL+LL) AT EACH HANGER (2 PER TRACK STRINGER AT EACH LOCATION SHOWN).

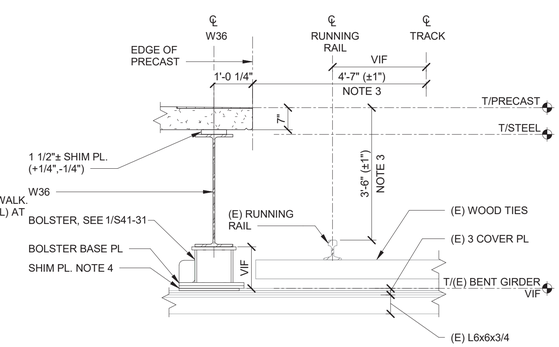

PLATFORM STEEL ALIGNMENT

NOTES:

1. SEE G30-00, CT-002, AND CT-008 FOR ADDITIONAL INFORMATION.
2. PRIOR TO LOCATING PROJECT GIRDLINES AND ELEVATIONS, CONTRACTOR SHALL SURVEY THE EXISITNG RAIL AND TRACK STRUCTURE, AFTER TRACK COLUMN REPLACEMENT, TO VERIFY DIMENSIONS AND ELEVATIONS PROVIDED.
3. FABRICATE AND ERECT PLATFORM STEEL FRAMING TO MAINTAIN DIMENSIONS TO CENTERLINE OF TRACK AND TOP OF RUNNING RAIL. REFERENCE TRACK SURVEY FOR RAIL ELEVATIONS. SEE NOTE 1.
4. PROVIDE ADDITIONAL SHIM PLATES (1" MAX) AS NECESSARY TO MAINTAIN T/STEEL & T/PRECAST ELEVATIONS.

DESIGN BY:									
DRAWN BY:									
CHECKED BY:									
APPROVED BY:			01/27/2020	ISSUE FOR BID	CJB	MW	TRM		
CDOT/APPROVED BY:		NO.	DATE	REVISIONS	DES.	DRW.	CHK.	DCCO	CDOT

SIMPSON GUMPERTZ & HEGER
Engineering of Structures and Building Enclosures
Simpson Gumpertz & Heger Inc.
135 South LaSalle Street, Suite 3800
Chicago, Illinois 60603
main: 312.754.7500 fax: 312.754.7501
www.sgh.com

PERKINS+WILL
The Wrigley Building
410 North Michigan Ave.
Suite 1600
Chicago, IL 60611
t 312.755.0770
f 312.755.0775
www.perkinswill.com

CDOT
CHICAGO DEPARTMENT OF TRANSPORTATION
DIVISION OF ENGINEERING

154 N DAMEN AVE - DAMEN GREEN LINE STATION

PLATFORM - PLATFORM FRAMING - WEST

CDOT PROJECT D-7-135 | DATE: 01/27/2020

SPEC. NO.

DRAWING NO. S11-32B

REVISION NO.

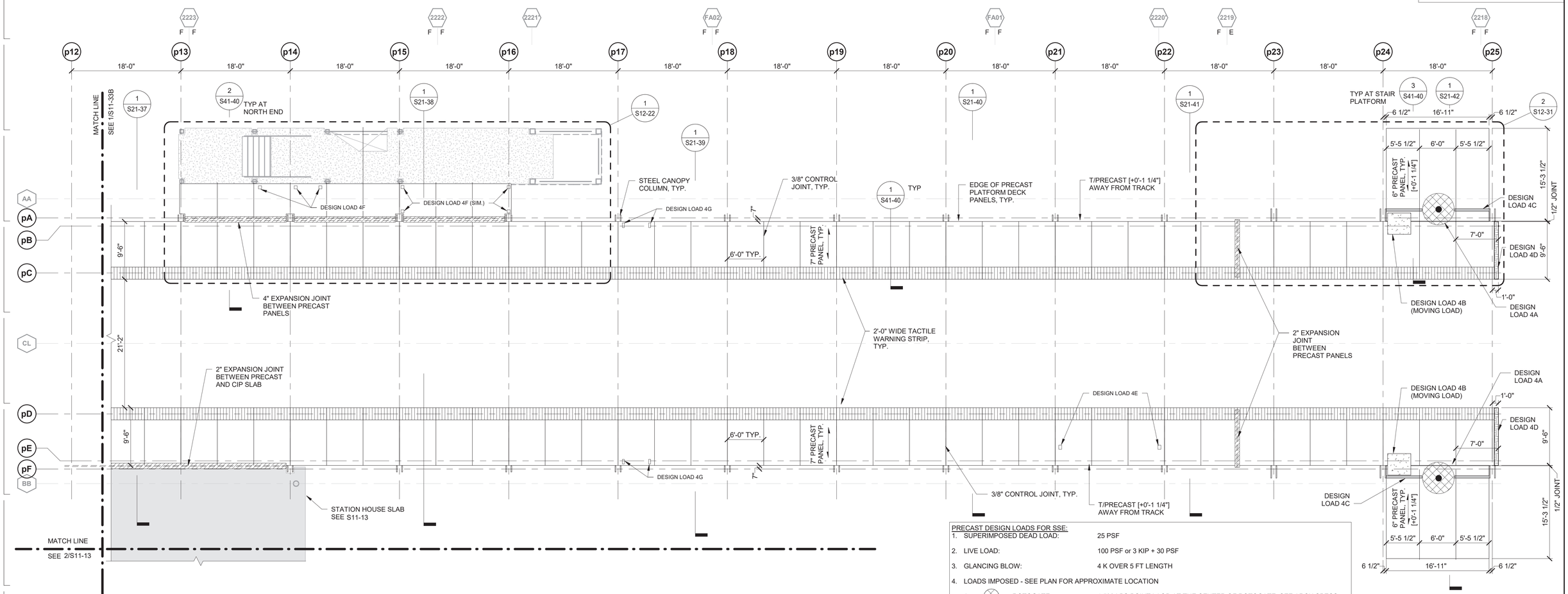

1 PRECAST PLATFORM PLAN - EAST

1/8" = 1'-0"

PLATFORM PRECAST PLAN NOTES:

1. DIMENSIONS INDICATED FOR EXISTING STRUCTURE ARE TO BE VERIFIED IN FIELD.
2. T/PRECAST CONCRETE PLANK ELEVATION AT EDGE ALONG TRACK TO BE AT +8-1/2" FROM T/STEEL.
3. E AND F INDICATE EXPANSION AND FIXED CONNECTIONS, RESPECTIVELY, IN TRACK SUPPORTING STRUCTURE.
4. SEE SHEET S41-40s FOR PRECAST DETAILS.
5. FOR ALL PRECAST NOTCHES, COORDINATE WITH ARCHITECTURE, CT, MEP, AND STRUCTURAL PLANS PRIOR TO FABRICATION.
6. FINAL PRECAST SIZES SHALL ACCOMMODATE CONTROL JOINTS AND EXPANSION JOINTS.
7. PRECAST LAYOUT IS APPROXIMATE. SUBMIT FINAL LAYOUT FOR APPROVAL BY THE COMMISSIONER.
8. OPENINGS THROUGH PRECAST PLANKS LESS THAN 2" DIA. TO BE DESIGNED/COORDINATED BY CONTRACTOR. SUCH OPENINGS SHALL AVOID REINFORCEMENT AND STEEL FRAMING BELOW.

PRECAST DESIGN LOADS FOR SSE:

1. SUPERIMPOSED DEAD LOAD: 25 PSF
2. LIVE LOAD: 100 PSF or 3 KIP + 30 PSF
3. GLANCING BLOW: 4 K OVER 5 FT LENGTH
4. LOADS IMPOSED - SEE PLAN FOR APPROXIMATE LOCATION
   - A. ROTOGATE — 1,500 LBS POINT LAOD AT THE CENTER OF ROTOGATE, SEE ARCH SPECS
   - B. SAND BOX (MOVING) — 3.5 KIPS OVER 3'-4" x 2'-8" AREA
   - C. ENTRY BARRIER — SEE 4/S41-43 & 5/S41-43
   - D. TRACK ACCESS STAIR — SEE 1/S41-43 & 2/S41-43
   - E. WINDSCREEN POSTS — SEE 3/S41-43
   - F. TRANSIT PANEL POSTS — SEE 6/S41-43
   - G. ADVERTISING POSTS — SEE 7/S41-43
5. COORDINATE MISC. LOADS AND REQUIRED NOTCHES, INSERTS, EMBEDS, AND ACCESSORIES WITH MANUFACTURERS DATA SHEET SUBMITTALS, AND OTHER CONTRACT DOCUMENTS.
6. REFER TO ARCH. AND CT DWGS FOR LOCATION OF MISC. LOADS.
7. SAND BOX MOVING LOAD APPLIES TO ALL PRECAST PANELS.

DESIGN BY:									
DRAWN BY:									
CHECKED BY:									
APPROVED BY:			01/27/2020	ISSUE FOR BID	CJB	MW	TRM		
CDOT/APPROVED BY:		NO.	DATE	REVISIONS	DES.	DRW.	CHK.	DCCO	CDOT

SIMPSON GUMPERTZ & HEGER
Engineering of Structures and Building Enclosures
Simpson Gumpertz & Heger Inc.
135 South LaSalle Street, Suite 3800
Chicago, Illinois 60603
main: 312.754.7500 fax: 312.754.7501
www.sgh.com

PERKINS+WILL
The Wrigley Building
410 North Michigan Ave.
Suite 1600
Chicago, IL 60611
t 312.755.0770
f 312.755.0775
www.perkinswill.com

CDOT
CHICAGO DEPARTMENT OF TRANSPORTATION
DIVISION OF ENGINEERING

154 N DAMEN AVE - DAMEN GREEN LINE STATION

PLATFORM - PRECAST PLAN - EAST

CDOT PROJECT D-7-135 | DATE: 01/27/2020

SPEC. NO.

DRAWING NO. **S11-33A**

REVISION NO.

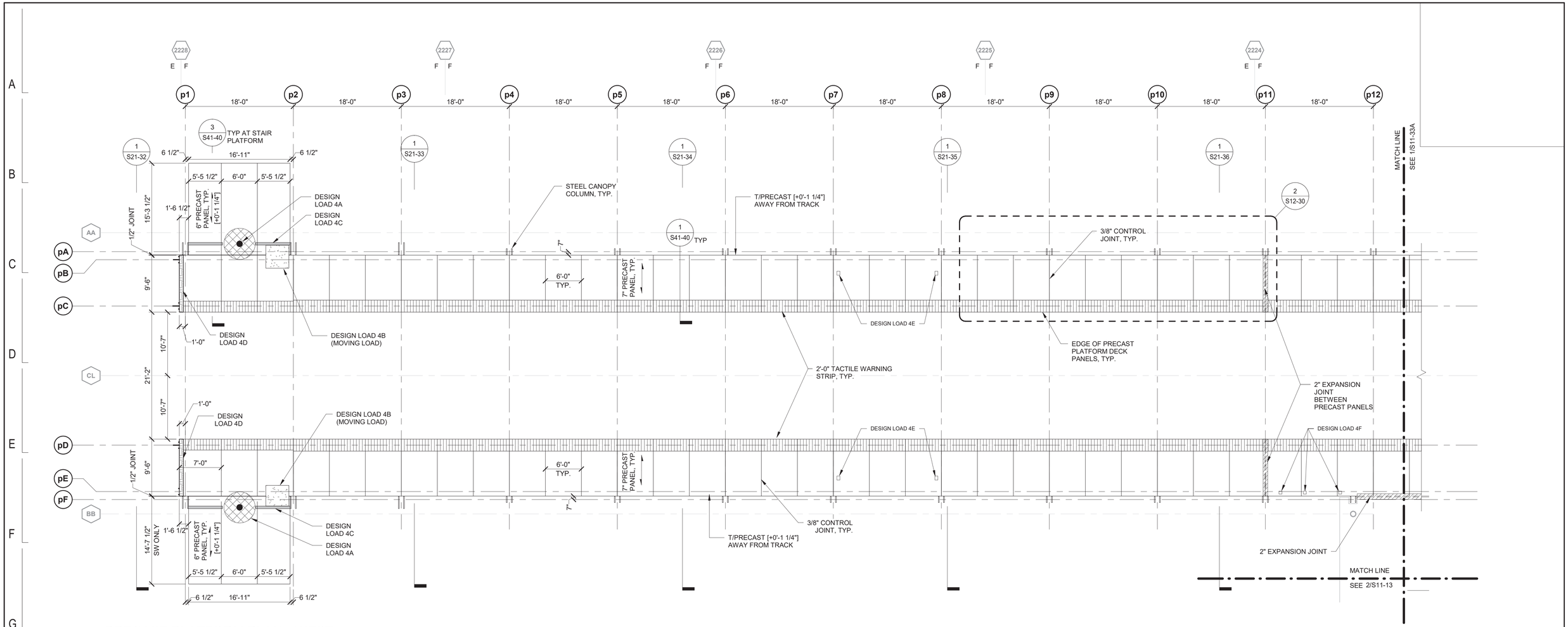

1 PRECAST PLATFORM PLAN - WEST

1/8" = 1'-0"

PRECAST DESIGN LOADS FOR SSE:

1. SUPERIMPOSED DEAD LOAD: 25 PSF
2. LIVE LOAD: 100 PSF or 3 KIP + 30 PSF
3. GLANCING BLOW: 4 K OVER 5 FT LENGTH
4. LOADS IMPOSED - SEE PLAN FOR APPROXIMATE LOCATION
   - A. ROTOGATE — 1,500 LBS POINT LAOD AT THE CENTER OF ROTOGATE, SEE ARCH SPECS
   - B. SAND BOX (MOVING) — 3.5 KIPS OVER 3'-4" x 2'-8" AREA
   - C. ENTRY BARRIER — SEE 4/S41-43 & 5/S41-43
   - D. TRACK ACCESS STAIR — SEE 1/S41-43 & 2/S41-43
   - E. WINDSCREEN POSTS — SEE 3/S41-43
   - F. TRANSIT PANEL POSTS — SEE 6/S41-43
   - G. ADVERTISING POSTS — SEE 7/S41-43
5. COORDINATE MISC. LOADS AND REQUIRED NOTCHES, INSERTS, EMBEDS, AND ACCESSORIES WITH MANUFACTURERS DATA SHEET SUBMITTALS, AND OTHER CONTRACT DOCUMENTS.
6. REFER TO ARCH. AND CT DWGS FOR LOCATION OF MISC. LOADS.
7. SAND BOX MOVING LOAD APPLIES TO ALL PRECAST PANELS.

PLATFORM PRECAST PLAN NOTES:

1. DIMENSIONS INDICATED FOR EXISTING STRUCTURE ARE TO BE VERIFIED IN FIELD.
2. T/PRECAST CONCRETE PLANK ELEVATION AT EDGE ALONG TRACK TO BE AT +8-1/2" FROM T/STEEL.
3. E AND F INDICATE EXPANSION AND FIXED CONNECTIONS, RESPECTIVELY, IN TRACK SUPPORTING STRUCTURE.
4. SEE SHEET S41-40s FOR PRECAST DETAILS.
5. FOR ALL PRECAST NOTCHES, COORDINATE WITH ARCHITECTURE, CT, MEP, AND STRUCTURAL PLANS PRIOR TO FABRICATION.
6. FINAL PRECAST SIZES SHALL ACCOMMODATE CONTROL JOINTS AND EXPANSION JOINTS.
7. PRECAST LAYOUT IS APPROXIMATE. SUBMIT FINAL LAYOUT FOR APPROVAL BY THE COMMISSIONER.
8. OPENINGS THROUGH PRECAST PLANKS LESS THAN 2" DIA. TO BE DESIGNED/COORDINATED BY CONTRACTOR. SUCH OPENINGS SHALL AVOID REINFORCEMENT AND STEEL FRAMING BELOW.

DESIGN BY:									
DRAWN BY:									
CHECKED BY:									
APPROVED BY:			01/27/2020	ISSUE FOR BID	CJB	MW	TRM		
CDOT/APPROVED BY:		NO.	DATE	REVISIONS	DES.	DRW.	CHK.	DCCO	CDOT

SIMPSON GUMPERTZ & HEGER
Engineering of Structures and Building Enclosures
Simpson Gumpertz & Heger Inc.
135 South LaSalle Street, Suite 3800
Chicago, Illinois 60603
main: 312.754.7500 fax: 312.754.7501
www.sgh.com

PERKINS+WILL
The Wrigley Building
410 North Michigan Ave.
Suite 1600
Chicago, IL 60611
t 312.755.0770
f 312.755.0775
www.perkinswill.com

CDOT
CHICAGO DEPARTMENT OF TRANSPORTATION
DIVISION OF ENGINEERING

154 N DAMEN AVE - DAMEN GREEN LINE STATION

PLATFORM - PRECAST PLAN - WEST

CDOT PROJECT D-7-135 | DATE: 01/27/2020

SPEC. NO.

DRAWING NO. **S11-33B**

REVISION NO.

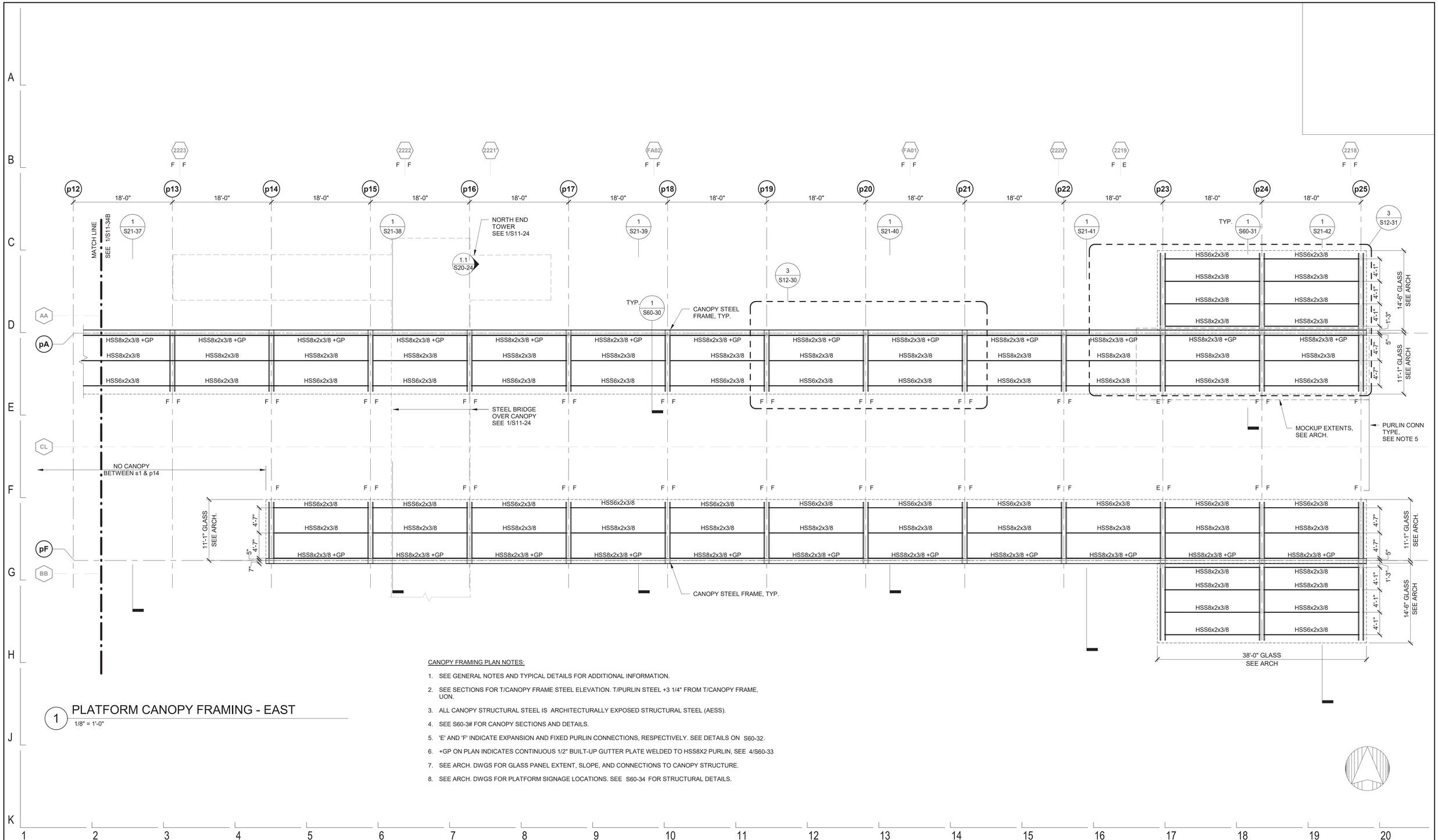

1 PLATFORM CANOPY FRAMING - EAST

1/8" = 1'-0"

CANOPY FRAMING PLAN NOTES:

1. SEE GENERAL NOTES AND TYPICAL DETAILS FOR ADDITIONAL INFORMATION.
2. SEE SECTIONS FOR T/CANOPY FRAME STEEL ELEVATION. T/PURLIN STEEL +3 1/4" FROM T/CANOPY FRAME, UON.
3. ALL CANOPY STRUCTURAL STEEL IS ARCHITECTURALLY EXPOSED STRUCTURAL STEEL (AESS).
4. SEE S60-3# FOR CANOPY SECTIONS AND DETAILS.
5. 'E' AND 'F' INDICATE EXPANSION AND FIXED PURLIN CONNECTIONS, RESPECTIVELY. SEE DETAILS ON S60-32.
6. +GP ON PLAN INDICATES CONTINUOUS 1/2" BUILT-UP GUTTER PLATE WELDED TO HSS8X2 PURLIN, SEE 4/S60-33
7. SEE ARCH. DWGS FOR GLASS PANEL EXTENT, SLOPE, AND CONNECTIONS TO CANOPY STRUCTURE.
8. SEE ARCH. DWGS FOR PLATFORM SIGNAGE LOCATIONS. SEE S60-34 FOR STRUCTURAL DETAILS.

DESIGN BY:									
DRAWN BY:									
CHECKED BY:									
APPROVED BY:			01/27/2020	ISSUE FOR BID	CJB	MW	TRM		
CDOT/APPROVED BY:		NO.	DATE	REVISIONS	DES.	DRW.	CHK.	DCCO	CDOT

SIMPSON GUMPERTZ & HEGER
Engineering of Structures and Building Enclosures
Simpson Gumpertz & Heger Inc.
135 South LaSalle Street, Suite 3800
Chicago, Illinois 60603
main: 312.754.7500 fax: 312.754.7501
www.sgh.com

PERKINS+WILL
The Wrigley Building
410 North Michigan Ave.
Suite 1600
Chicago, IL 60611
t 312.755.0770
f 312.755.0775
www.perkinswill.com

CDOT
CHICAGO DEPARTMENT OF TRANSPORTATION
DIVISION OF ENGINEERING

154 N DAMEN AVE - DAMEN GREEN LINE STATION

PLATFORM - CANOPY - EAST

CDOT PROJECT D-7-135 | DATE: 01/27/2020

SPEC. NO.

DRAWING NO. **S11-34A**

REVISION NO.

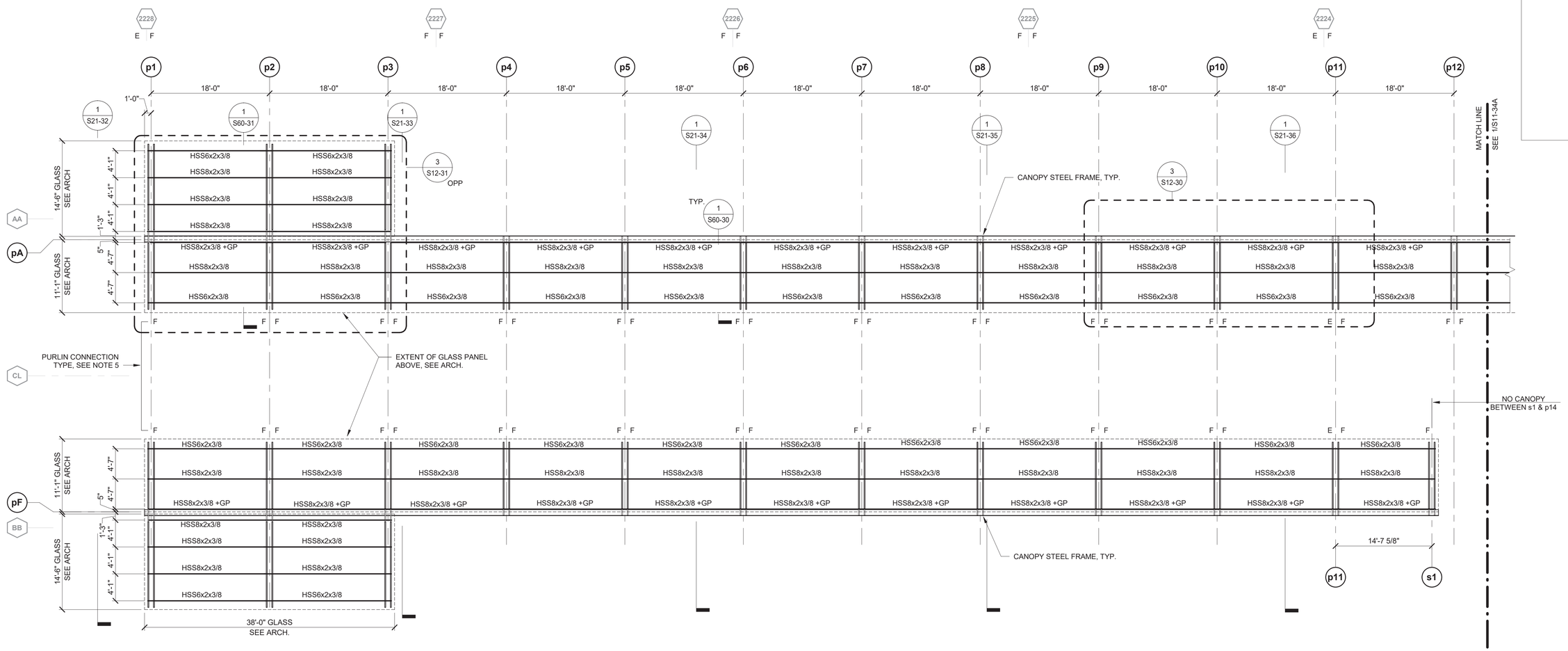

1 PLATFORM CANOPY FRAMING - WEST

1/8" = 1'-0"

CANOPY FRAMING PLAN NOTES:

1. SEE GENERAL NOTES AND TYPICAL DETAILS FOR ADDITIONAL INFORMATION.
2. SEE SECTIONS FOR T/CANOPY FRAME STEEL ELEVATION. T/PURLIN STEEL +3 1/4" FROM T/CANOPY FRAME, UON.
3. ALL CANOPY STRUCTURAL STEEL IS ARCHITECTURALLY EXPOSED STRUCTURAL STEEL (AESS).
4. SEE S60-3# FOR CANOPY SECTIONS AND DETAILS.
5. 'E' AND 'F' INDICATE EXPANSION AND FIXED PURLIN CONNECTIONS, RESPECTIVELY. SEE DETAILS ON S60-32.
6. +GP ON PLAN INDICATES CONTINUOUS 1/2" BUILT-UP GUTTER PLATE WELDED TO HSS8X2 PURLIN, SEE 4/S60-33
7. SEE ARCH. DWGS FOR GLASS PANEL EXTENT, SLOPE, AND CONNECTIONS TO CANOPY STRUCTURE.
8. SEE ARCH. DWGS FOR PLATFORM SIGNAGE LOCATIONS. SEE S60-34 FOR STRUCTURAL DETAILS.

DESIGN BY:									
DRAWN BY:									
CHECKED BY:									
APPROVED BY:			01/27/2020	ISSUE FOR BID	CJB	MW	TRM		
CDOT/APPROVED BY:		NO.	DATE	REVISIONS	DES.	DRW.	CHK.	DCCO	CDOT

SIMPSON GUMPERTZ & HEGER
Engineering of Structures and Building Enclosures
Simpson Gumpertz & Heger Inc.
135 South LaSalle Street, Suite 3800
Chicago, Illinois 60603
main: 312.754.7500 fax: 312.754.7501
www.sgh.com

PERKINS+WILL
The Wrigley Building
410 North Michigan Ave.
Suite 1600
Chicago, IL 60611
t 312.755.0770
f 312.755.0775
www.perkinswill.com

CDOT
CHICAGO DEPARTMENT OF TRANSPORTATION
DIVISION OF ENGINEERING

154 N DAMEN AVE - DAMEN GREEN LINE STATION

PLATFORM - CANOPY - WEST

CDOT PROJECT D-7-135 | DATE: 01/27/2020

SPEC. NO.

DRAWING NO. **S11-34B**

REVISION NO.

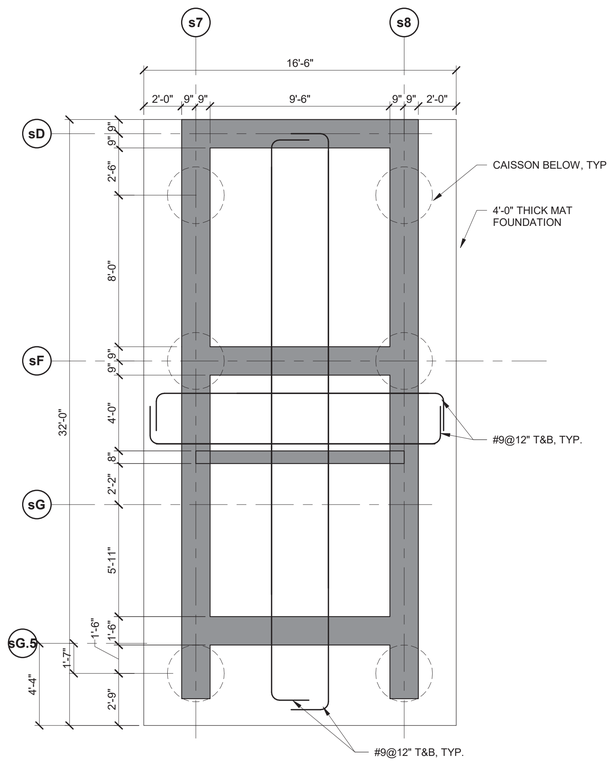

1 MAT - PART PLAN
1/4" = 1'-0"

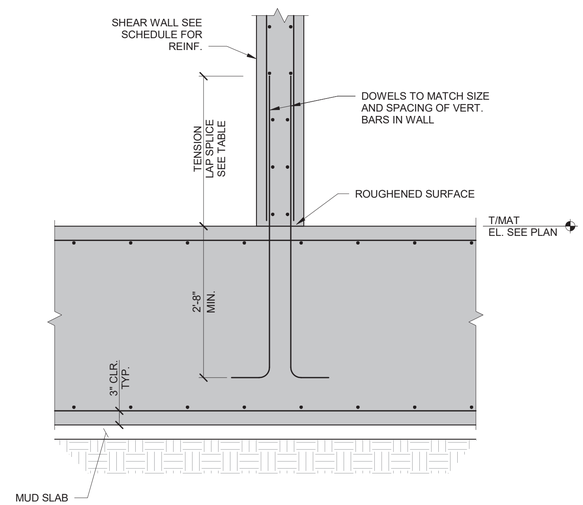

NOTE:
SEE PLAN NOTES FOR SIZE SPACING. LOCATION AND PLACEMENT SEQUENCING OF MAT REINFORCING BARS. UNO.

2 CONCRETE SHEARWALL AT MAT DETAIL
3/4" = 1'-0"

DESIGN BY:									
DRAWN BY:									
CHECKED BY:									
APPROVED BY:			01/27/2020	ISSUE FOR BID	EJT	HMM	TRM		
CDOT/APPROVED BY:		NO.	DATE	REVISIONS	DES.	DRW.	CHK.	DCCO	CDOT

SIMPSON GUMPERTZ & HEGER
Engineering of Structures and Building Enclosures
Simpson Gumpertz & Heger Inc.
135 South LaSalle Street, Suite 3800
Chicago, Illinois 60603
main: 312.754.7500 fax: 312.754.7501
www.sgh.com

PERKINS+WILL
The Wrigley Building
410 North Michigan Ave.
Suite 1600
Chicago, IL 60611
t 312.755.0770
f 312.755.0775
www.perkinswill.com

CDOT
CHICAGO DEPARTMENT OF TRANSPORTATION
DIVISION OF ENGINEERING

154 N DAMEN AVE - DAMEN GREEN LINE STATION

STATION HOUSE - MAT FOUNDATION PART PLAN

CDOT PROJECT D-7-135

DATE: 01/27/2020

SPEC. NO.

DRAWING NO. S12-10

REVISION NO.

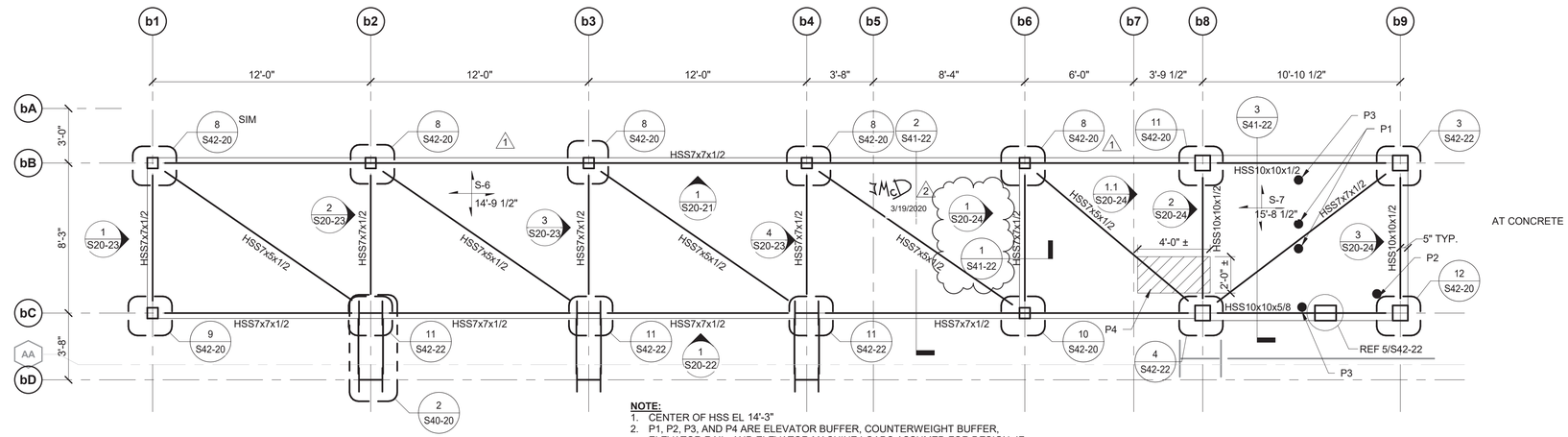

NOTE:
1. CENTER OF HSS EL 14'-3"
2. P1, P2, P3, AND P4 ARE ELEVATOR BUFFER, COUNTERWEIGHT BUFFER, ELEVATOR RAIL, AND ELEVATOR MACHINE LOADS ASSUMED FOR DESIGN. IF ACTUAL LOADS EXCEED THOSE LISTED, THE CONTRACTOR'S ENGINEER SHALL EVALUATE THE STRUCTURE FOR THE FINAL LOADING AND SUBMIT CALCULATIONS TO THE COMMISSIONER FOR REVIEW. LOADS LISTED HERE ARE DOUBLED TO ACCOUNT FOR IMPACT. RAIL FORCES AND BUFFER FORCES DO NOT OCCUR SIMULTANEOUSLY.
P1 = 11,000 LB
P2 = 18,000 LB
P3 = 13,000 LB
P4 = -35,000 LB (UPLIFT)

1 TOWER/BRIDGE - LEVEL 1.5 PARTIAL PLAN

1/4" = 1'-0"

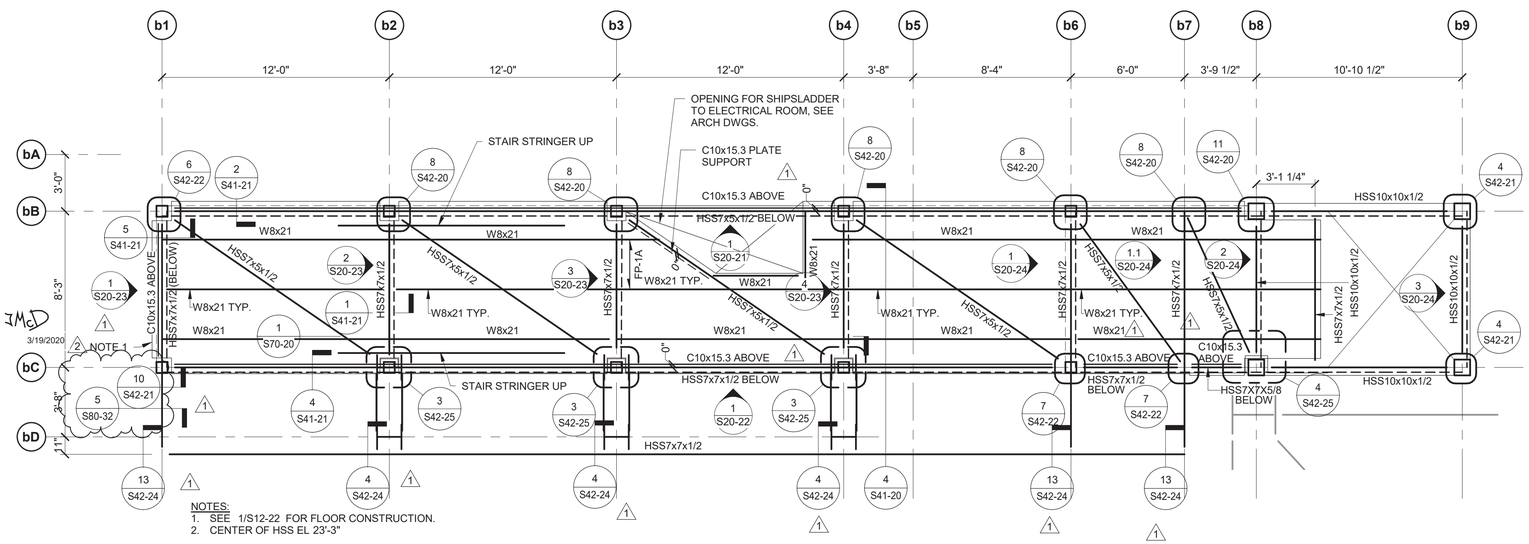

NOTES:
1. SEE 1/S12-22 FOR FLOOR CONSTRUCTION.
2. CENTER OF HSS EL 23'-3"

2 TOWER/BRIDGE - LEVEL 2 PARTIAL PLAN

1/4" = 1'-0"

FRAMING PLAN NOTES:

1. SEE GENERAL NOTES AND TYPICAL DETAILS FOR ADDITIONAL INFORMATION.
2. FIELD VERIFY EXISTING STRUCTURE DIMENSIONS, ELEVATIONS, AND CONDITIONS.
3. ON PLAN INDICATES SLAB CONSTRUCTION. SEE SLAB NOTES THIS SHEET FOR SLAB INFORMATION.
4. ON PLAN INDICATES CHANGE IN SLAB ELEVATION. SEE SEE ARCHITECTURAL DETAILS FOR LIMITS AND LOCATIONS.
5. ON PLAN INDICATES OPENING THROUGH ROOF CONSTRUCTION. SEE TYPICAL DETAIL FOR SUPPORT REQUIREMENTS. LOCATIONS SHOWN ARE APPROXIMATE AND NOT ALL OPENINGS MAY BE INDICATED. COORDINATE SIZE, QUANTITY, AND LOCATION WITH ALL CONSTRUCTION DOCUMENTS AND REFLECT NECESSARY FRAMING AND REINFORCEMENT IN SHOP DRAWINGS SUBMITTED FOR REVIEW.
6. ALL BEAMS ARE SPACED EQUALLY BETWEEN MAJOR GRIDS UNLESS OTHERWISE NOTED.
7. RD/FD — ON PLAN INDICATES FLOOR DRAIN IN SLAB. LOCATIONS ARE SHOWN SCHEMATICALLY SEE ARCHITECTURAL DRAWINGS FOR ADD'L INFO AND SLOPE TO DRAIN. SEE TYPICAL DECK REINFORCEMENT AT OPENINGS DETAILS.
8. L 1 — ON PLAN INDICATES L6x4x3/8 ANGLE (LLV) STEEL ANGLE, SEE FOR CONNECTION TO CONCRETE WALLS AND FOR CONNECTION TO CMU.
9. BP - # — ON PLAN INDICATES BEARING PLATE, SEE TYPICAL DETAILS.
10. EP-# — ON PLAN INDICATES EMBEDDED STEEL PLATE. SEE TYPICAL DETAILS FOR ADDITIONAL INFORMATION.
11. FOR T/STEEL EL SEE ELEVATIONS S20-21 THROUGH S20-28.
12. CENTER OF PEDESTRIAN BRIDGE HSS MEMBERS = 37'-7" (LEVEL 2.9).
13. LLA — ON PLAN INDICATES LIFE LINE ANCHOR

STEEL BEAM LEGEND

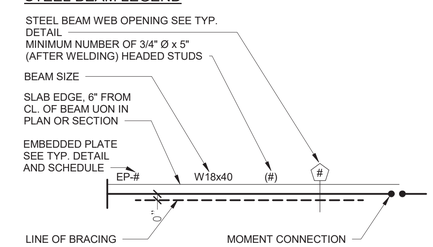

FLOOR PLATE TYPE - FP-1 S41-20
3/8" THICK SLIPNOT 316-L STAINLESS STEEL PLATE WITH SLIP NOT TOP FINISH SUPPORTED ON C10X30 @ 3' OC. T/PLATE EL +39'-1 5/8"

SLAB TYPE - S-6 **f'c=5000 PSI**
8" THICK NORMAL WEIGHT CONCRETE TWO-WAY STRUCTURAL SLAB. REINFORCE WITH #5@12" OC IN EACH DIRECTION TOP AND BOTTOM UNLESS OTHERWISE NOTED. TOP OF SLAB ELEVATION AS NOTED.

SLAB TYPE - S-7 **f'c=5000 PSI**
12" THICK NORMAL WEIGHT CONCRETE TWO-WAY STRUCTURAL SLAB. REINFORCE WITH #7@9" OC IN EACH DIRECTION TOP AND BOTTOM UNLESS OTHERWISE NOTED. TOP OF SLAB ELEVATION AS NOTED.

DESIGN BY:								
DRAWN BY:								
CHECKED BY:								
APPROVED BY:			03/18/2020	BUILDING PERMIT CORRECTIONS 2	EJT	HMM	TRM	
CDOT/APPROVED BY:		NO.	DATE	REVISIONS	DES.	DRW.	CHK.	DCCO	CDOT

STATE OF ILLINOIS — TERRY R. McDONNELL — 081-008 — LICENSED STRUCTURAL ENGINEER — Exp. 11/30/2020

SIMPSON GUMPERTZ & HEGER
Engineering of Structures and Building Enclosures
Simpson Gumpertz & Heger Inc.
135 South LaSalle Street, Suite 3800
Chicago, Illinois 60603
main: 312.754.7500 fax: 312.754.7501
www.sgh.com

PERKINS+WILL
The Wrigley Building
410 North Michigan Ave.
Suite 1600
Chicago, IL 60611
t 312.755.0770
f 312.755.0775
www.perkinswill.com

CDOT
CHICAGO DEPARTMENT OF TRANSPORTATION
DIVISION OF ENGINEERING

154 N DAMEN AVE - DAMEN GREEN LINE STATION

TOWER/BRIDGE - PART PLANS

CDOT PROJECT D-7-135 | DATE: 01/27/2020

SPEC. NO.

DRAWING NO. **S12-20**

REVISION NO.

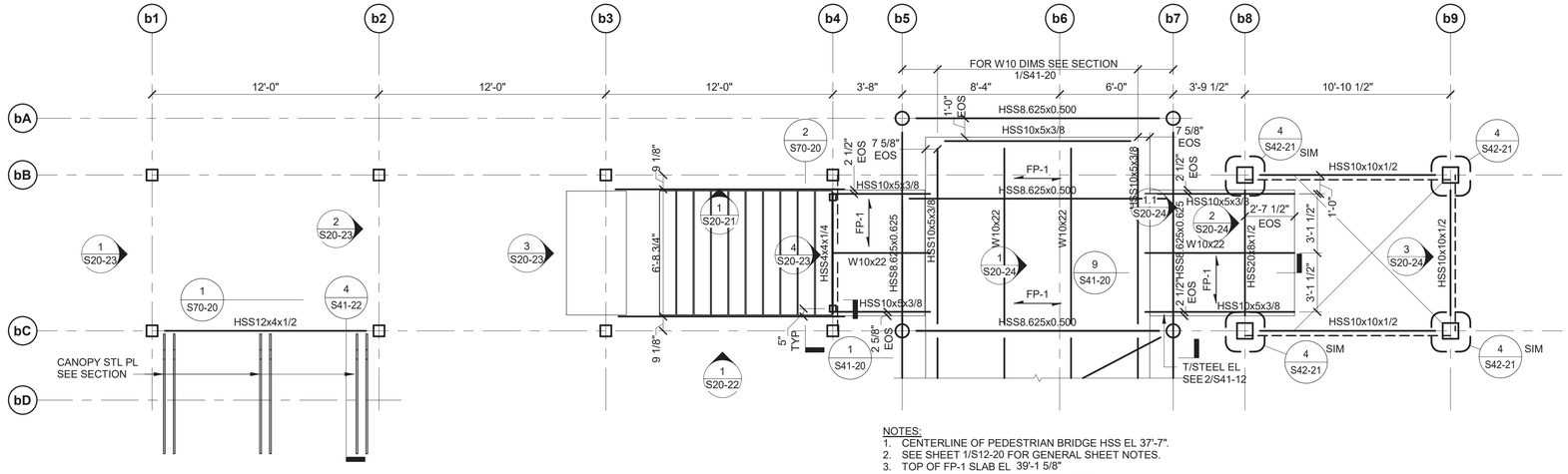

NOTES:
1. CENTERLINE OF PEDESTRIAN BRIDGE HSS EL 37'-7".
2. SEE SHEET 1/S12-20 FOR GENERAL SHEET NOTES.
3. TOP OF FP-1 SLAB EL 39'-1 5/8"
4. SEE ARCH DWGS FOR GLASS EXTENT.

1 TOWER/BRIDGE - LEVEL 3 PARTIAL PLAN

1/4" = 1'-0"

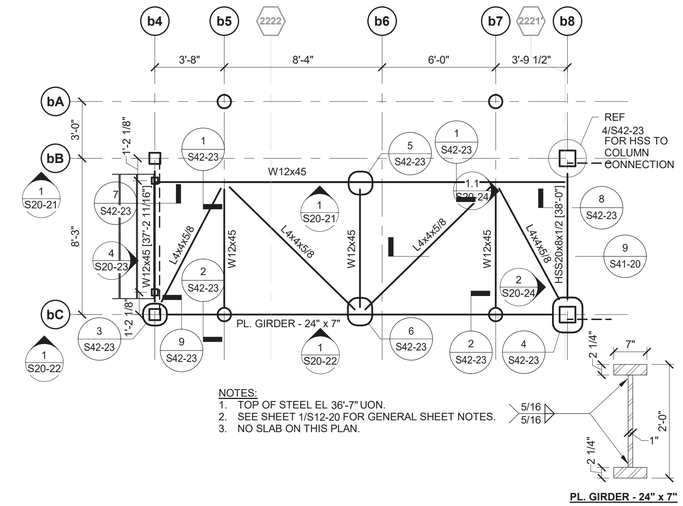

NOTES:
1. TOP OF STEEL EL 36'-7" UON.
2. SEE SHEET 1/S12-20 FOR GENERAL SHEET NOTES.
3. NO SLAB ON THIS PLAN.

2 TOWER/BRIDGE - LEVEL 2.9 LOW FRAMING PARTIAL PLAN

1/4" = 1'-0"

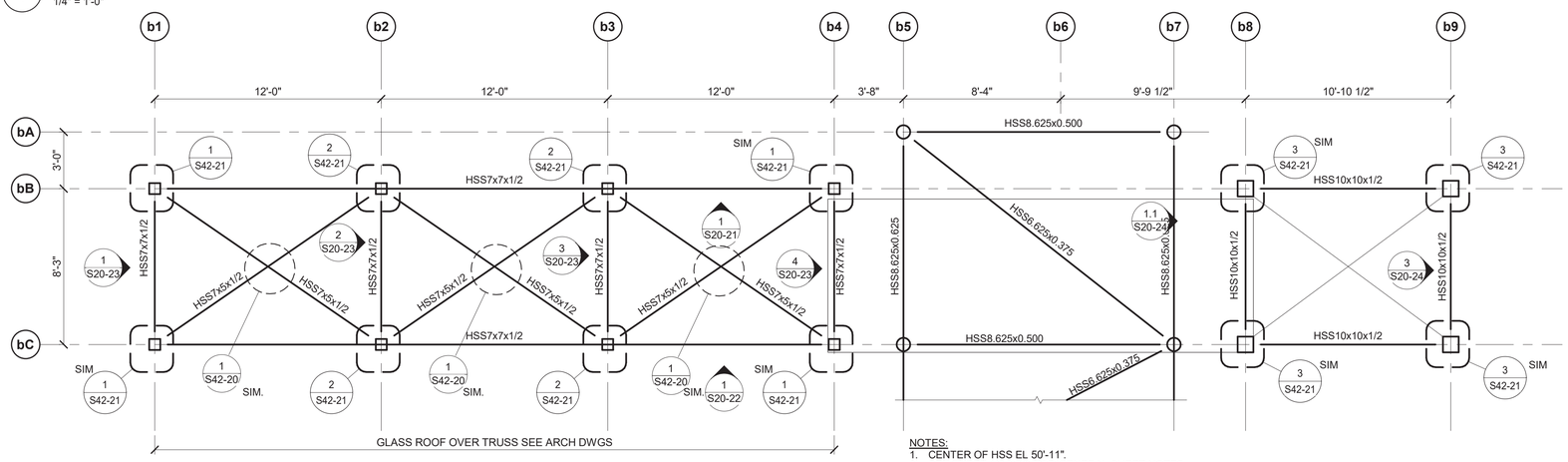

NOTES:
1. CENTER OF HSS EL 50'-11".
2. SEE SHEET 1/S12-20 FOR GENERAL SHEET NOTES.
3. FRAMING ENCLOSED BY GLASS, SEE ARCHITECTURE DRAWINGS FOR MORE INFORMATION.
4. FRAMING FOR LEVEL 4.5 AND 4.8 CAN BE FOUND ON S11-25

3 TOWER/BRIDGE - LEVEL 4 ROOF PARTIAL PLAN

1/4" = 1'-0"

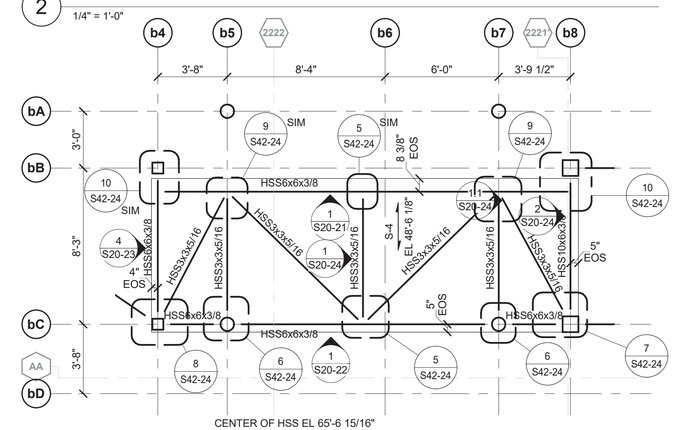

SLAB TYPE - S-4
1 1/2" - 18 GA. (MIN) GALVANIZED STEEL ROOF DECK, TYPE B, PLACED WITH NARROW RIBS DOWN OVER STEEL FRAMING. ALL DECK TO BE PLACED OVER TWO SPANS, MIN. DECK GAUGE PROVIDED IS MIN. REQUIRED FOR STRUCTURAL LOADS. CONTRACTOR TO INCREASE GAUGE, IF REQUIRED, TO MEET FM GLOBAL REQUIREMENTS OF ENTIRE ROOF ASSEMBLY.

4 TOWER/BRIDGE - LEVEL 3.9 LOW ROOF PARTIAL PLAN

1/4" = 1'-0"

DESIGN BY:									
DRAWN BY:									
CHECKED BY:									
APPROVED BY:			01/27/2020	ISSUE FOR BID	EJT	HMM	TRM		
CDOT/APPROVED BY:		NO.	DATE	REVISIONS	DES.	DRW.	CHK.	DCCO	CDOT

SIMPSON GUMPERTZ & HEGER
Engineering of Structures and Building Enclosures
Simpson Gumpertz & Heger Inc.
135 South LaSalle Street, Suite 3800
Chicago, Illinois 60603
main: 312.754.7500 fax: 312.754.7501
www.sgh.com

PERKINS+WILL
The Wrigley Building
410 North Michigan Ave.
Suite 1600
Chicago, IL 60611
t 312.755.0770
f 312.755.0775
www.perkinswill.com

CDOT
CHICAGO DEPARTMENT OF TRANSPORTATION
DIVISION OF ENGINEERING

154 N DAMEN AVE - DAMEN GREEN LINE STATION

TOWER/BRIDGE - PART PLANS

CDOT PROJECT D-7-135 | DATE: 01/27/2020

SPEC. NO.

DRAWING NO. **S12-21**

REVISION NO.

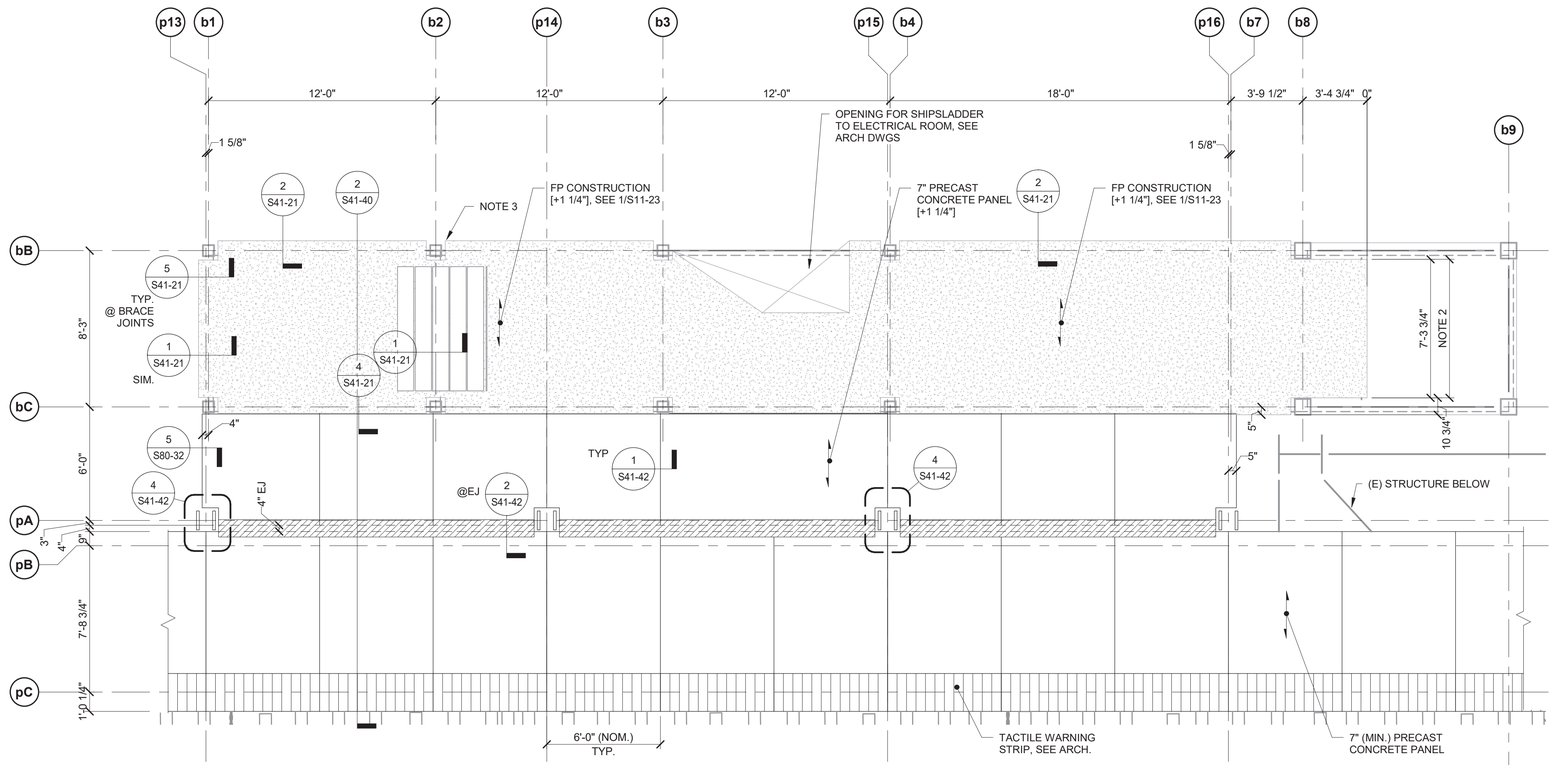

NOTES:
1. COORDINATE DIMENSIONS, LOCATION, EDGE CONDITION, AND NOTCHING OF FLOOR PLATE CONSTRUCTION WITH ARCHITECTURAL DRAWINGS.
2. COORDINATE DIMENSIONS WITH ELEVATOR MANUFACTURER.
3. COORDINATE NOTCHES AT BRACE JOINTS WITH STEEL SHOP DRAWINGS.
4. T/PRECAST PANEL EL +24'-3 5/8" AT TRACK EDGE OF PLATFORM, UON WITH [+/- #"] ON PLAN.

1 PART PLAN - LEVEL 2 NORTH END

1/4" = 1'-0"

DESIGN BY:									
DRAWN BY:									
CHECKED BY:									
APPROVED BY:			01/27/2020	ISSUE FOR BID	EJT	HMM	TRM		
CDOT/APPROVED BY:		NO.	DATE	REVISIONS	DES.	DRW.	CHK.	DCCO	CDOT

SIMPSON GUMPERTZ & HEGER
Engineering of Structures and Building Enclosures
Simpson Gumpertz & Heger Inc.
135 South LaSalle Street, Suite 3800
Chicago, Illinois 60603
main: 312.754.7500 fax: 312.754.7501
www.sgh.com

PERKINS+WILL
The Wrigley Building
410 North Michigan Ave.
Suite 1600
Chicago, IL 60611
t 312.755.0770
f 312.755.0775
www.perkinswill.com

CDOT
CHICAGO DEPARTMENT OF TRANSPORTATION
DIVISION OF ENGINEERING

154 N DAMEN AVE - DAMEN GREEN LINE STATION

TOWER/BRIDGE - PART PLANS

CDOT PROJECT D-7-135

DATE: 01/27/2020

SPEC. NO.

DRAWING NO. S12-22

REVISION NO.

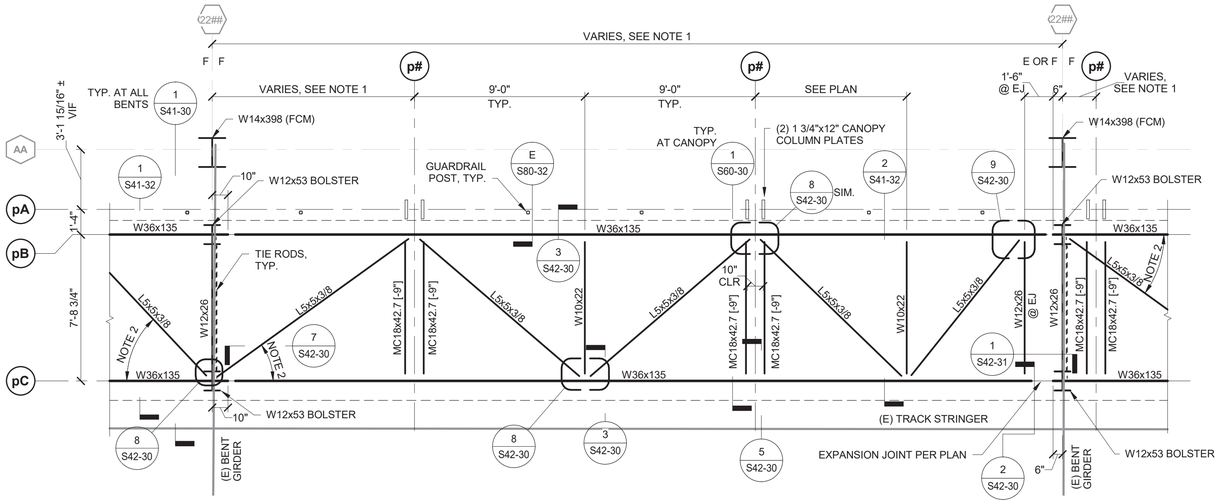

1 PLATFORM - PART PLAN - TYPICAL STEEL FRAMING

1/4" = 1'-0"

SHEET NOTES:

1. REPRESENTATIVE PART PLANS SHOWN. SEE PLANS ON FOR GEOMETRY AT REMAINDER OF PLATFORM/PRECAST/CANOPY; SEE G10-00 FOR PLATFORM DIMENSIONS WITH RESPECT TO EXISTING BENT GIRDERS.
2. PLAN BRACING ANGLES WILL VARY DEPENDING ON BENT GIRDER LOCATION WITH RESPECT TO NEW CANOPY FRAMING.
3. ALIGN W12 BOLSTER WITH CENTERLINE OF EXISTING BENT GIRDERS.
4. SEE ARCH. DWGS. FOR LOCATION OF SIGNAGE, WINDBREAKS, AND BENCH ASSEMBLIES.

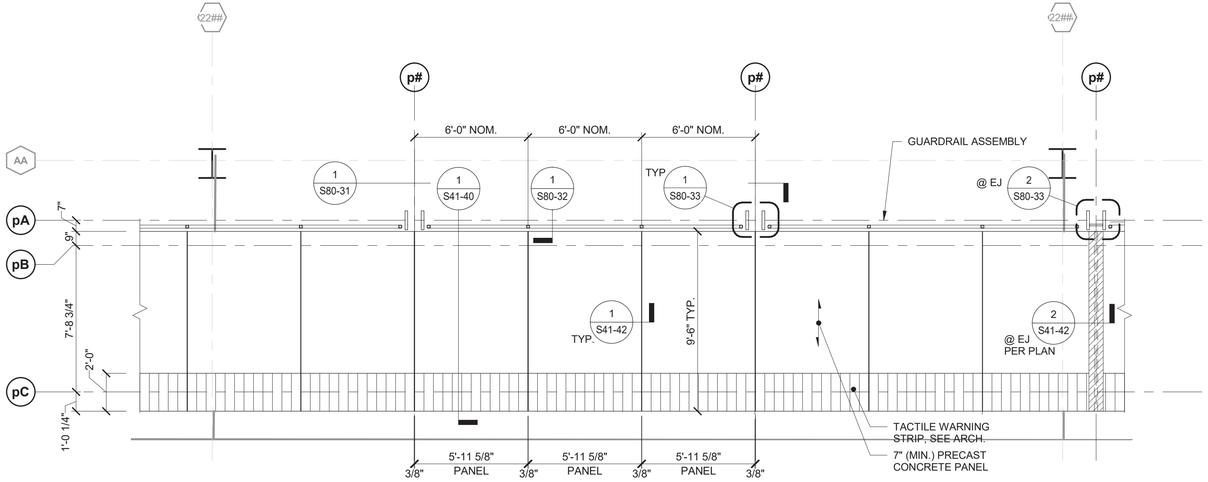

2 PLATFORM - PART PLAN - TYPICAL PRECAST

1/4" = 1'-0"

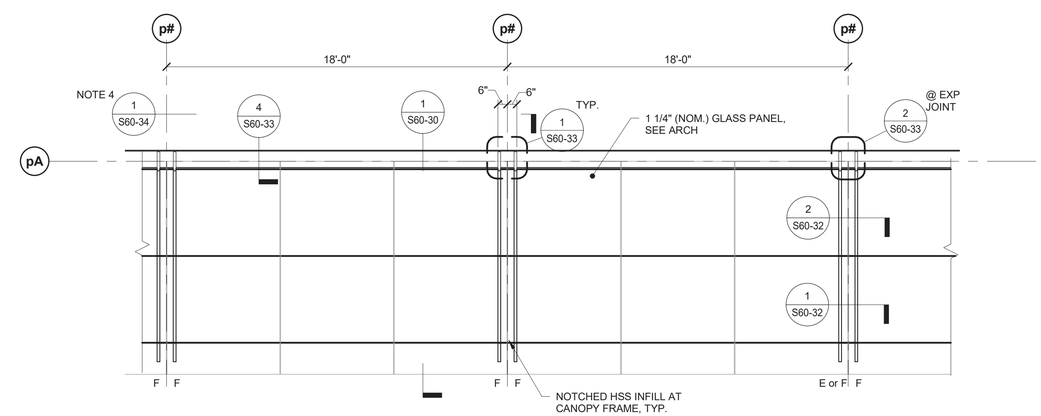

3 PLATFORM - PART PLAN - TYPICAL CANOPY FRAMING

1/4" = 1'-0"

DESIGN BY:									
DRAWN BY:									
CHECKED BY:									
APPROVED BY:			01/27/2020	ISSUE FOR BID	CJB	HMM	TRM		
CDOT/APPROVED BY:		NO.	DATE	REVISIONS	DES.	DRW.	CHK.	DCCO	CDOT

SIMPSON GUMPERTZ & HEGER
Engineering of Structures and Building Enclosures
Simpson Gumpertz & Heger Inc.
135 South LaSalle Street, Suite 3800
Chicago, Illinois 60603
main: 312.754.7500 fax: 312.754.7501
www.sgh.com

PERKINS+WILL
The Wrigley Building
410 North Michigan Ave.
Suite 1600
Chicago, IL 60611
t 312.755.0770
f 312.755.0775
www.perkinswill.com

CDOT
CHICAGO DEPARTMENT OF TRANSPORTATION
DIVISION OF ENGINEERING

154 N DAMEN AVE - DAMEN GREEN LINE STATION

PLATFORM - PART PLAN - TYPICAL BAY

CDOT PROJECT D-7-135 | DATE: 01/27/2020

SPEC. NO.

DRAWING NO. **S12-30**

REVISION NO.

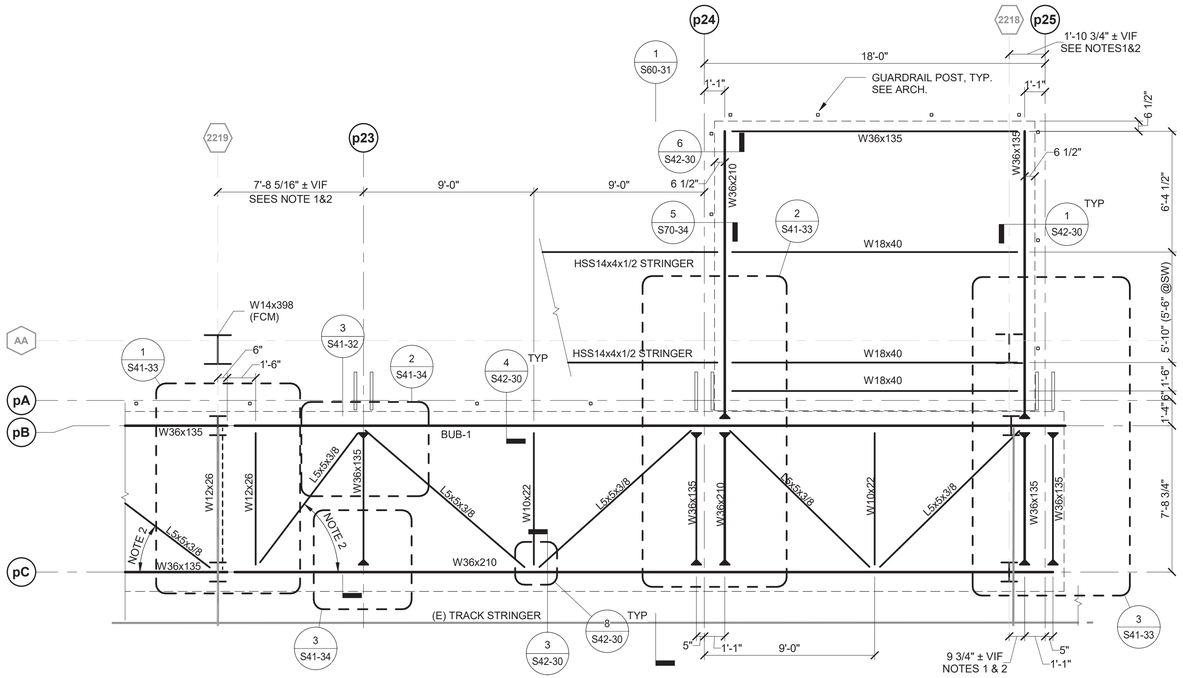

1 PLATFORM - PART PLAN - STEEL FRAMING AT NORTHEAST STAIR PLATFORM

1/4" = 1'-0"

SHEET NOTES:

1. STAIR PLATFORM FRAMING PLAN SHOWN FOR NORTHEAST CORNER; FRAMING IS SIMILAR AT SOUTHEAST, NORTHWEST, AND SOUTHWEST CORNERS. SEE G10-00 FOR DIMENSIONS BETWEEN PLATFORM GRIDS AND EXISTING BENT GRIDS.
2. PLAN BRACING ANGLES WILL VARY DEPENDING ON BENT GIRDER LOCATION WITH RESPECT TO NEW CANOPY FRAMING.
3. ALIGN W12 BOLSTER WITH CENTERLINE OF EXISTING BENT GIRDERS.

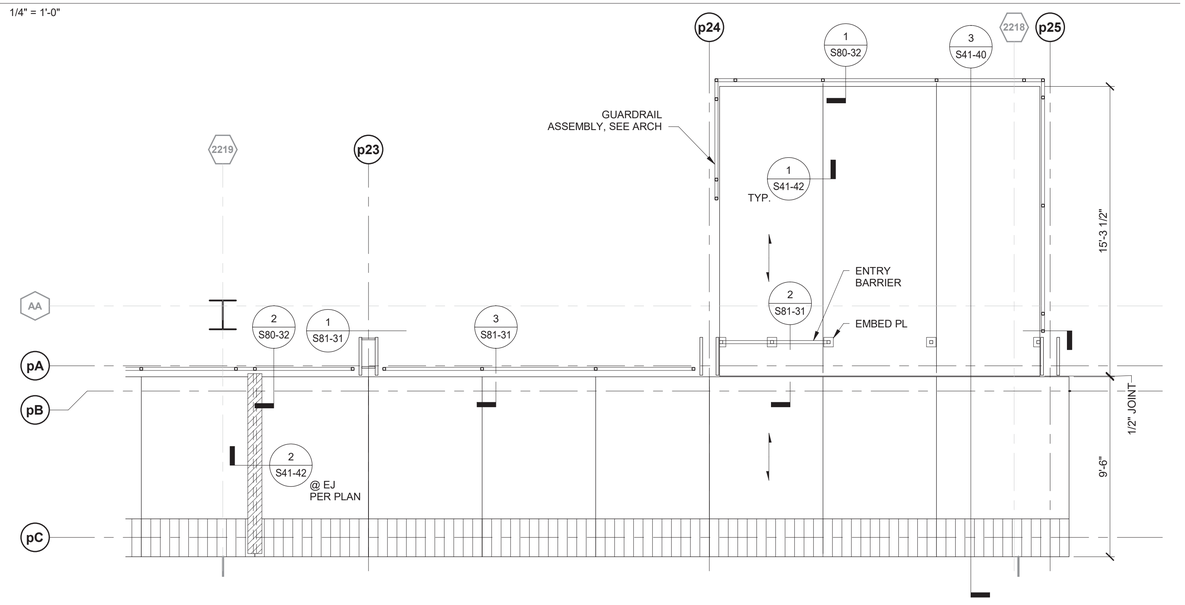

2 PLATFORM - PART PLAN - PRECAST AT NORTHEAST STAIR PLATFORM

1/4" = 1'-0"

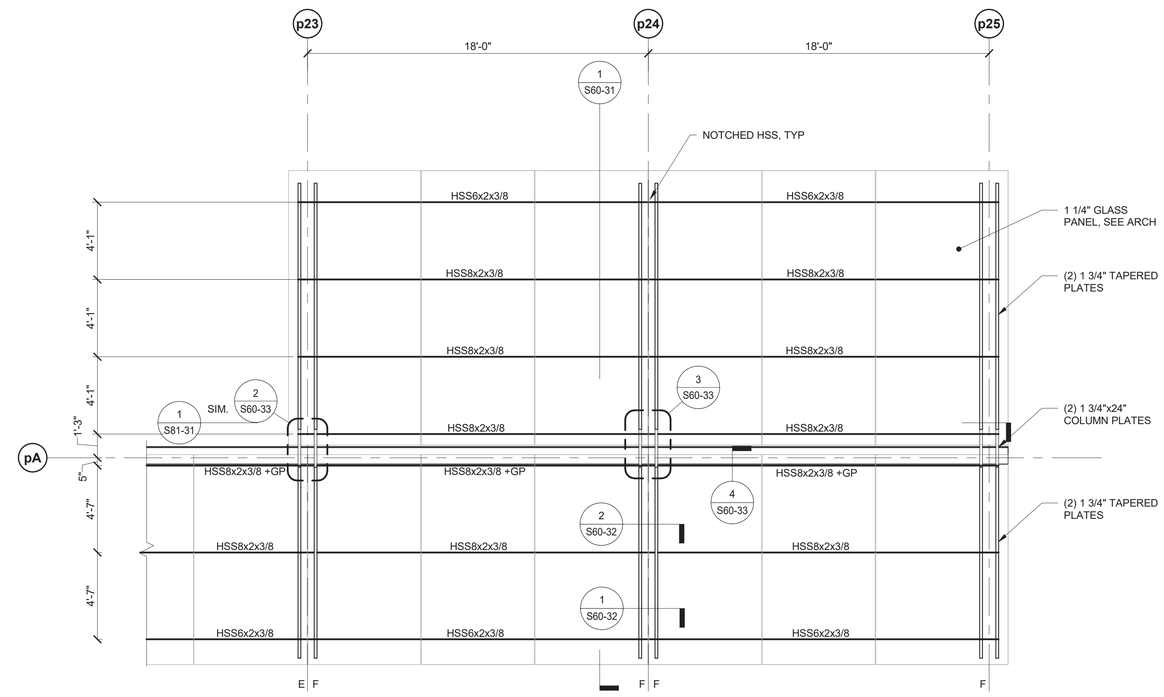

3 PLATFORM - PART PLAN - CANOPY FRAMING AT NORTHEAST STAIR

1/4" = 1'-0"

DESIGN BY:								
DRAWN BY:								
CHECKED BY:								
APPROVED BY:		01/27/2020	ISSUE FOR BID	CJB	HMM	TRM		
CDOT/APPROVED BY:	NO.	DATE	REVISIONS	DES.	DRW.	CHK.	DCCO	CDOT

SIMPSON GUMPERTZ & HEGER
Engineering of Structures and Building Enclosures
Simpson Gumpertz & Heger Inc.
135 South LaSalle Street, Suite 3800
Chicago, Illinois 60603
main: 312.754.7500 fax: 312.754.7501
www.sgh.com

PERKINS+WILL
The Wrigley Building
410 North Michigan Ave.
Suite 1600
Chicago, IL 60611
t 312.755.0770
f 312.755.0775
www.perkinswill.com

CDOT
CHICAGO DEPARTMENT OF TRANSPORTATION
DIVISION OF ENGINEERING

154 N DAMEN AVE - DAMEN GREEN LINE STATION

PLATFORM - PART PLAN - STAIR PLATFORM

CDOT PROJECT D-7-135 | DATE: 01/27/2020

SPEC. NO.

DRAWING NO. S12-31

REVISION NO.

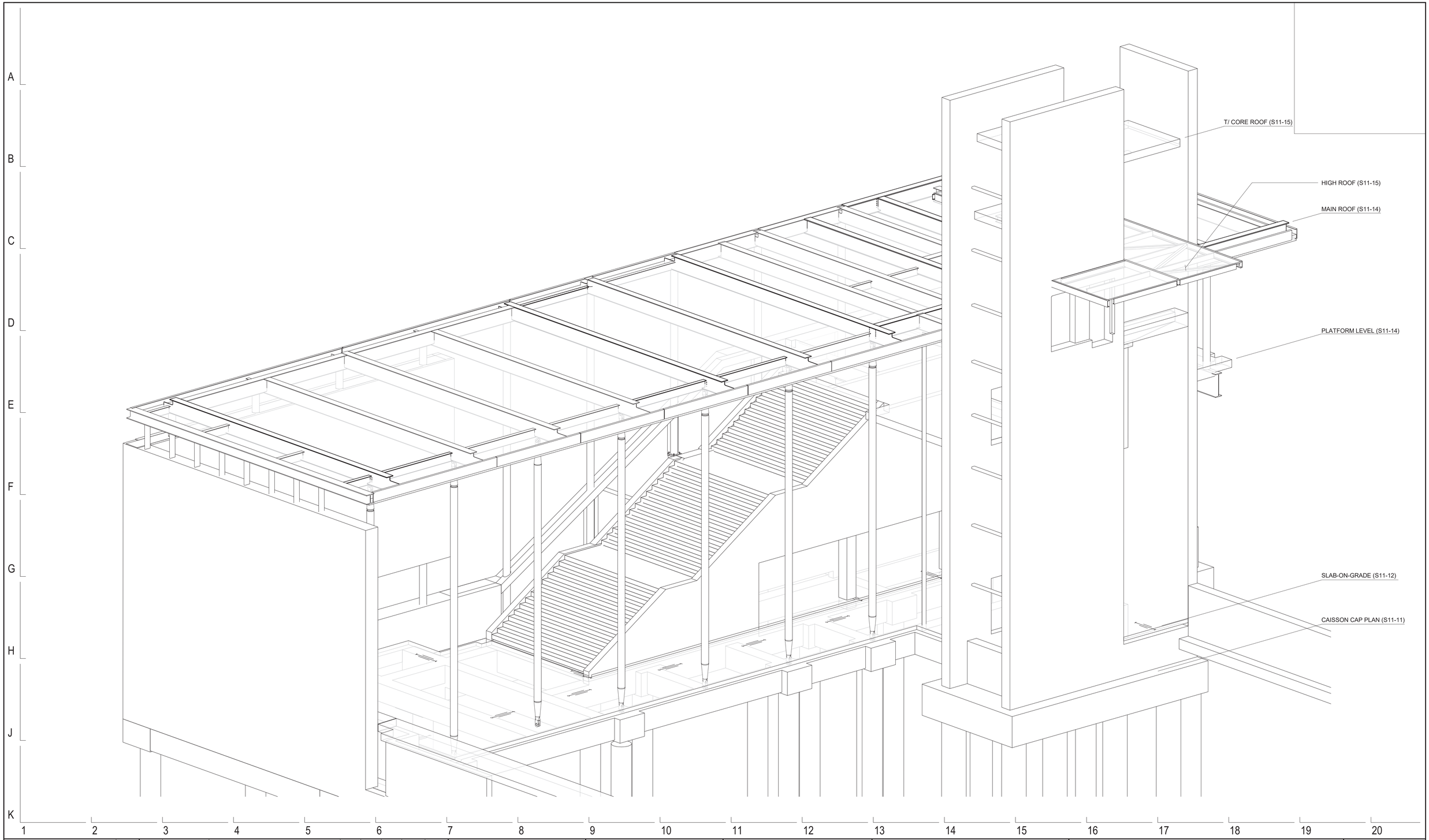

DESIGN BY:									
DRAWN BY:									
CHECKED BY:									
APPROVED BY:			01/27/2020	ISSUE FOR BID	EJT	MW	TRM		
CDOT/APPROVED BY:		NO.	DATE	REVISIONS	DES.	DRW.	CHK.	DCCO	CDOT

SIMPSON GUMPERTZ & HEGER
Engineering of Structures and Building Enclosures
Simpson Gumpertz & Heger Inc.
135 South LaSalle Street, Suite 3800
Chicago, Illinois 60603
main: 312.754.7500 fax: 312.754.7501
www.sgh.com

PERKINS+WILL
The Wrigley Building
410 North Michigan Ave.
Suite 1600
Chicago, IL 60611
t 312.755.0770
f 312.755.0775
www.perkinswill.com

CDOT
CHICAGO DEPARTMENT OF TRANSPORTATION
DIVISION OF ENGINEERING

154 N DAMEN AVE - DAMEN GREEN LINE STATION

STATION HOUSE 3D OVERALL

CDOT PROJECT D-7-135

DATE: 01/27/2020

SPEC. NO.

DRAWING NO. **S20-10**

REVISION NO.

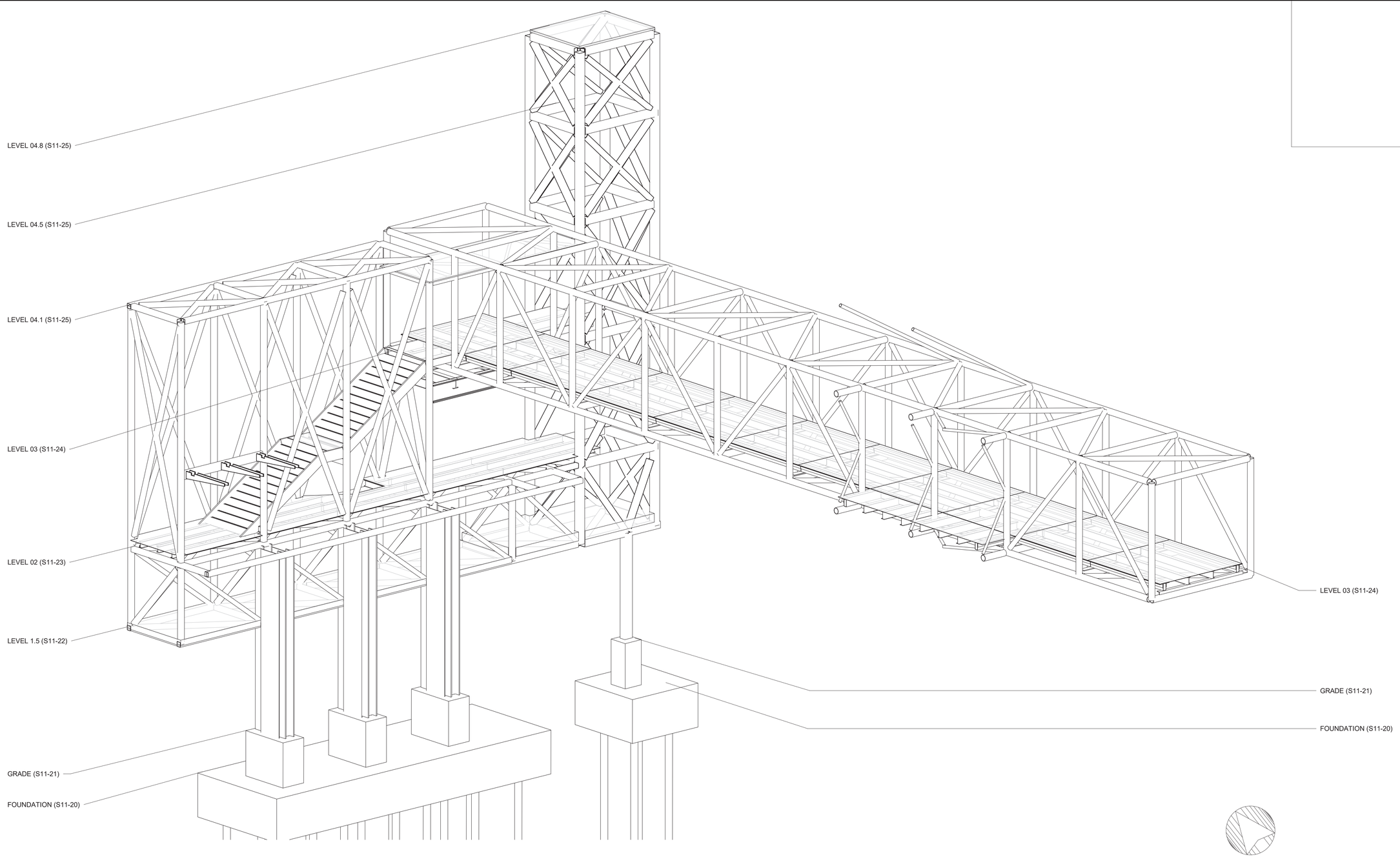

1 DOC_TOWER/BRIDGE OVERALL 3D

DESIGN BY:									
DRAWN BY:									
CHECKED BY:									
APPROVED BY:			01/27/2020	ISSUE FOR BID	EJT	MW	TRM		
CDOT/APPROVED BY:		NO.	DATE	REVISIONS	DES.	DRW.	CHK.	DCCO	CDOT

SIMPSON GUMPERTZ & HEGER
Engineering of Structures and Building Enclosures
Simpson Gumpertz & Heger Inc.
135 South LaSalle Street, Suite 3800
Chicago, Illinois 60603
main: 312.754.7500 fax: 312.754.7501
www.sgh.com

PERKINS+WILL
The Wrigley Building
410 North Michigan Ave.
Suite 1600
Chicago, IL 60611
t 312.755.0770
f 312.755.0775
www.perkinswill.com

CDOT
CHICAGO DEPARTMENT OF TRANSPORTATION
DIVISION OF ENGINEERING

154 N DAMEN AVE - DAMEN GREEN LINE STATION

TOWER/BRIDGE 3D OVERALL

CDOT PROJECT D-7-135 | DATE: 01/27/2020

SPEC. NO.

DRAWING NO. **S20-20**

REVISION NO.

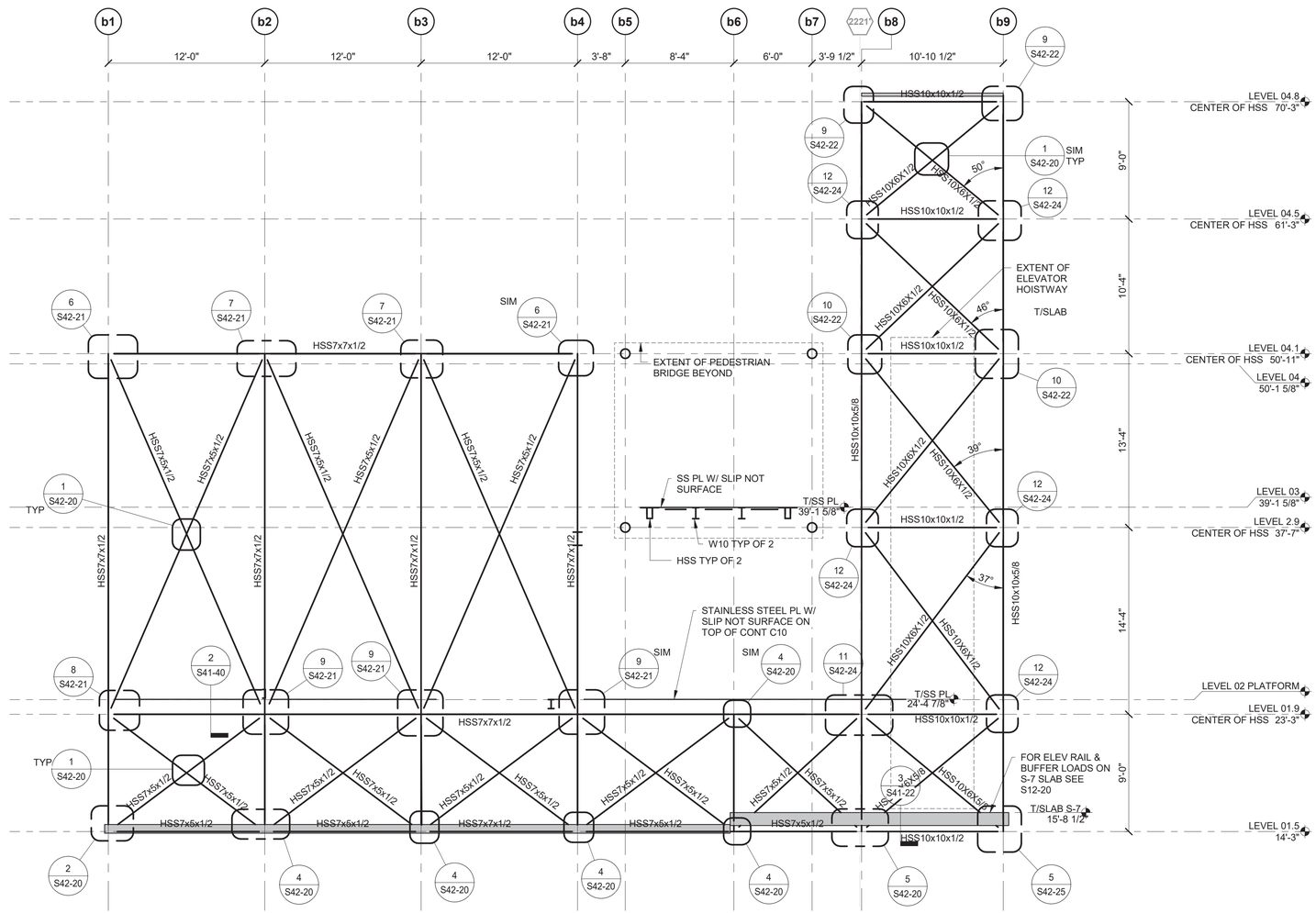

NOTE:
1. STEEL ELEVATIONS DENOTE CENTERLINE OF HSS SHAPES UON.

1 ELEVATION AT GRID bB

3/16" = 1'-0"

DESIGN BY:									
DRAWN BY:									
CHECKED BY:									
APPROVED BY:			01/27/2020	ISSUE FOR BID	EJT	MW	TRM		
CDOT/APPROVED BY:		NO.	DATE	REVISIONS	DES.	DRW.	CHK.	DCCO	CDOT

SIMPSON GUMPERTZ & HEGER
Engineering of Structures and Building Enclosures
Simpson Gumpertz & Heger Inc.
135 South LaSalle Street, Suite 3800
Chicago, Illinois 60603
main: 312.754.7500 fax: 312.754.7501
www.sgh.com

PERKINS+WILL
The Wrigley Building
410 North Michigan Ave.
Suite 1600
Chicago, IL 60611
t 312.755.0770
f 312.755.0775
www.perkinswill.com

CDOT
CHICAGO DEPARTMENT OF TRANSPORTATION
DIVISION OF ENGINEERING

154 N DAMEN AVE - DAMEN GREEN LINE STATION

TOWER/BRIDGE - ELEVATIONS

CDOT PROJECT D-7-135 | DATE: 01/27/2020

SPEC. NO.

DRAWING NO. **S20-21**

REVISION NO.

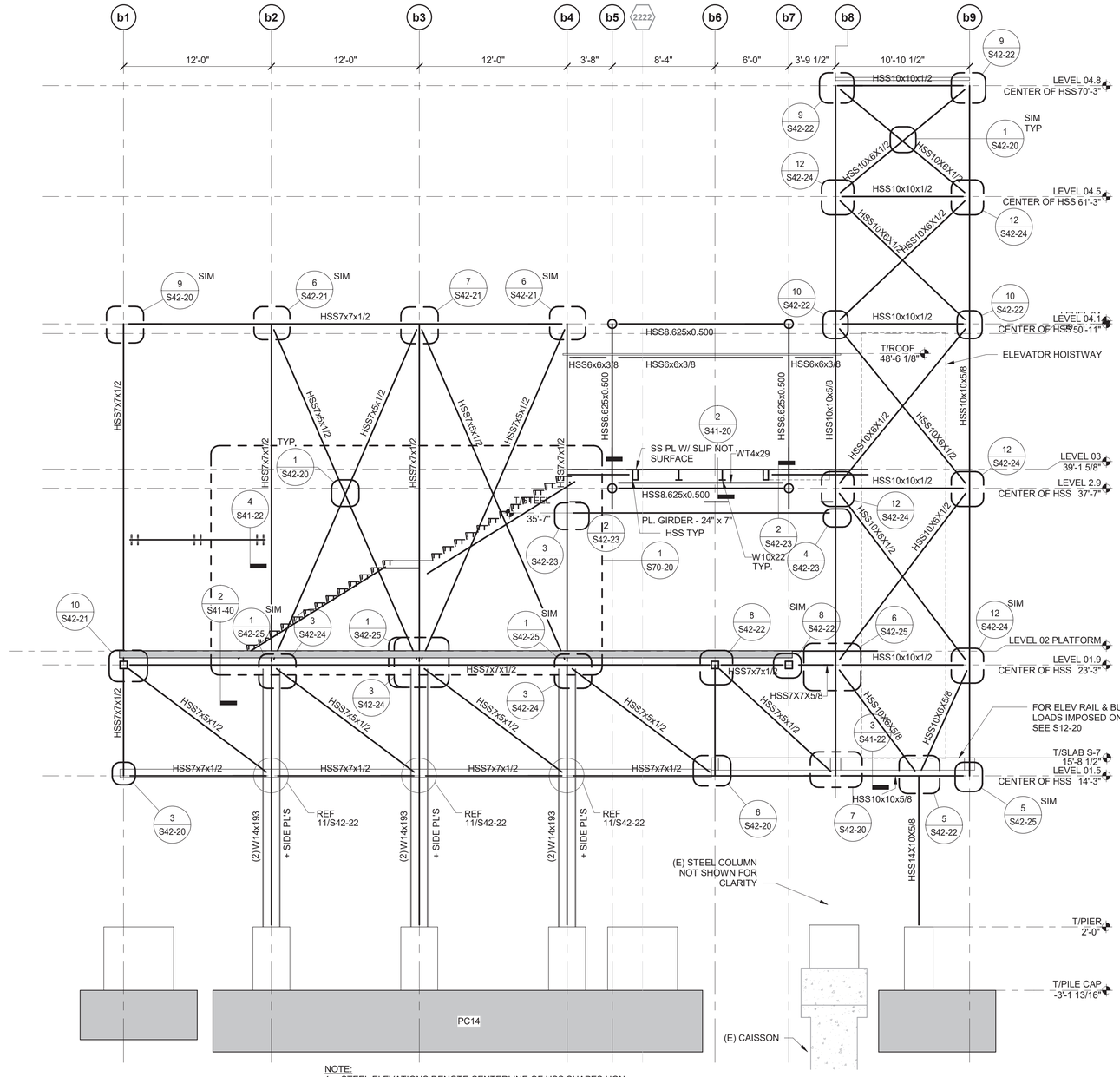

NOTE:
1. STEEL ELEVATIONS DENOTE CENTERLINE OF HSS SHAPES UON.
2. TRACK STRUCTURE NOT SHOWN FOR CLARITY.

1 ELEVATION AT GRID bC
3/16" = 1'-0"

DESIGN BY:									
DRAWN BY:									
CHECKED BY:									
APPROVED BY:			01/27/2020	ISSUE FOR BID	EJT	HMM	TRM		
CDOT/APPROVED BY:		NO.	DATE	REVISIONS	DES.	DRW.	CHK.	DCCO	CDOT

SIMPSON GUMPERTZ & HEGER
Engineering of Structures and Building Enclosures
Simpson Gumpertz & Heger Inc.
135 South LaSalle Street, Suite 3800
Chicago, Illinois 60603
main: 312.754.7500 fax: 312.754.7501
www.sgh.com

PERKINS+WILL
The Wrigley Building
410 North Michigan Ave.
Suite 1600
Chicago, IL 60611
t 312.755.0770
f 312.755.0775
www.perkinswill.com

CDOT
CHICAGO DEPARTMENT OF TRANSPORTATION
DIVISION OF ENGINEERING

154 N DAMEN AVE - DAMEN GREEN LINE STATION

TOWER/BRIDGE - ELEVATIONS

SPEC. NO.

DRAWING NO. S20-22

CDOT PROJECT D-7-135 | DATE: 01/27/2020 | REVISION NO.

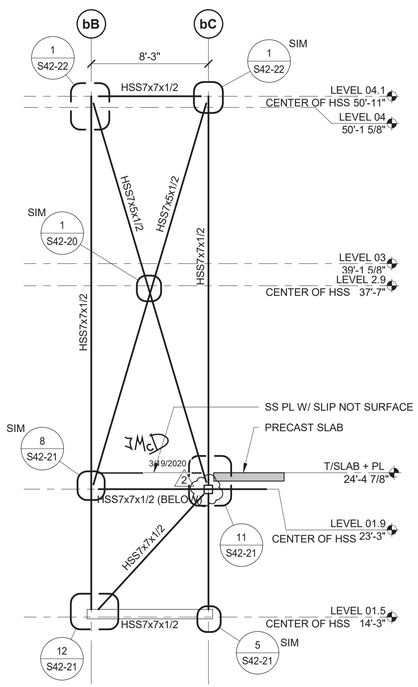

NOTE:
1. STEEL ELEVATIONS DENOTE CENTERLINE OF HSS SHAPES UON.

1 ELEVATION AT GRID b1
3/16" = 1'-0"

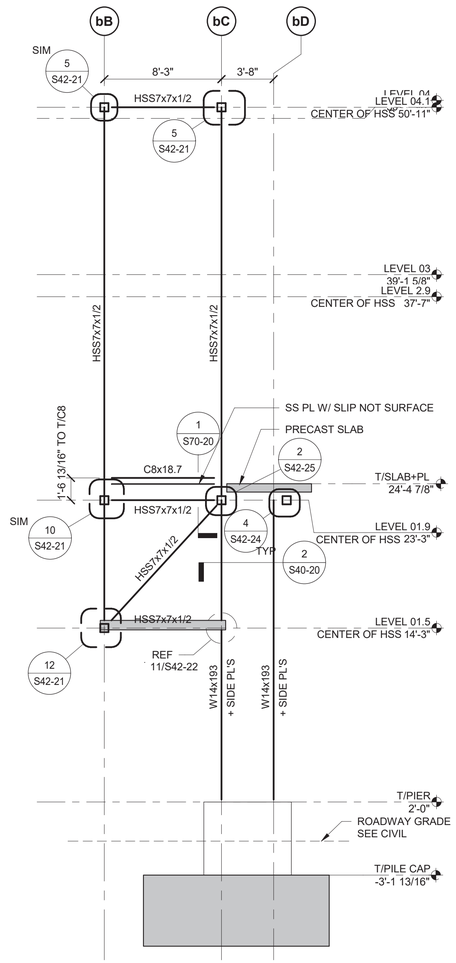

NOTE:
1. STEEL ELEVATIONS DENOTE CENTERLINE OF HSS SHAPES UON.

2 ELEVATION AT GRID b2
3/16" = 1'-0"

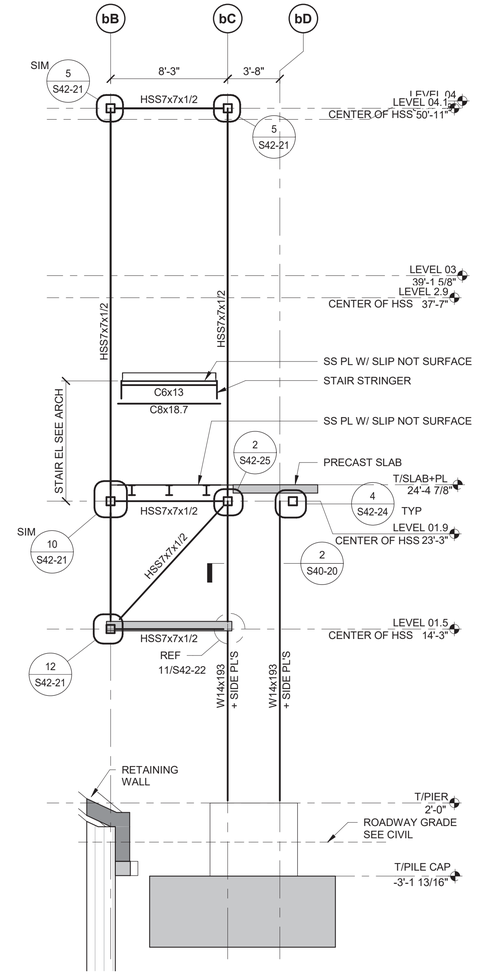

NOTE:
1. STEEL ELEVATIONS DENOTE CENTERLINE OF HSS SHAPES UON.

3 ELEVATION AT GRID b3
3/16" = 1'-0"

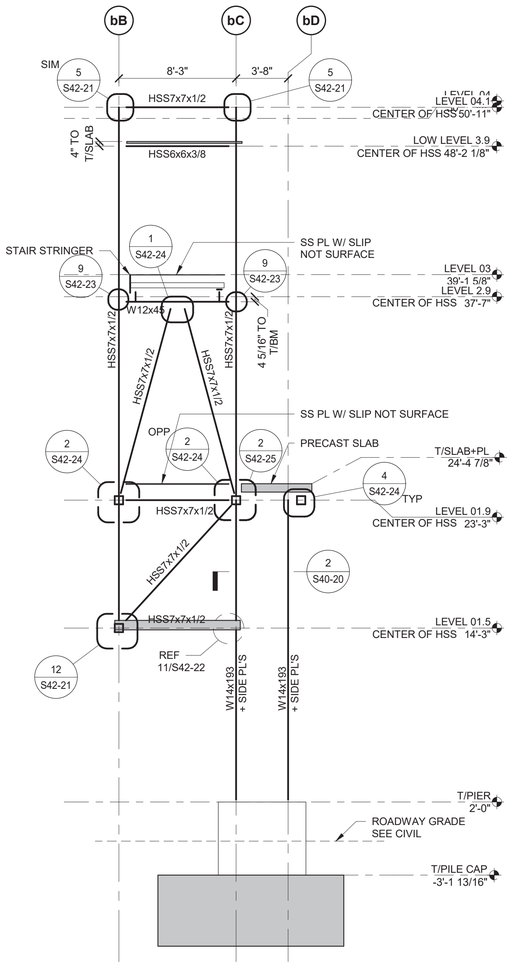

NOTE:
1. STEEL ELEVATIONS DENOTE CENTERLINE OF HSS SHAPES UON.

4 ELEVATION AT GRID b4
3/16" = 1'-0"

DESIGN BY:									
DRAWN BY:									
CHECKED BY:									
APPROVED BY:			03/18/2020	BUILDING PERMIT CORRECTIONS 2	EJT	MW	TRM		
CDOT/APPROVED BY:		NO.	DATE	REVISIONS	DES.	DRW.	CHK.	DCCO	CDOT

STATE OF ILLINOIS
TERRY R. McDONNELL
081-006
LICENSED STRUCTURAL ENGINEER
Exp. 11/30/2020

SIMPSON GUMPERTZ & HEGER
Engineering of Structures and Building Enclosures
Simpson Gumpertz & Heger Inc.
135 South LaSalle Street, Suite 3800
Chicago, Illinois 60603
main: 312.754.7500 fax: 312.754.7501
www.sgh.com

PERKINS+WILL
The Wrigley Building
410 North Michigan Ave.
Suite 1600
Chicago, IL 60611
t 312.755.0770
f 312.755.0775
www.perkinswill.com

CDOT
CHICAGO DEPARTMENT OF TRANSPORTATION
DIVISION OF ENGINEERING

154 N DAMEN AVE - DAMEN GREEN LINE STATION

TOWER/BRIDGE - ELEVATIONS

CDOT PROJECT D-7-135

DATE: 01/27/2020

SPEC. NO.

DRAWING NO.
S20-23

REVISION NO.

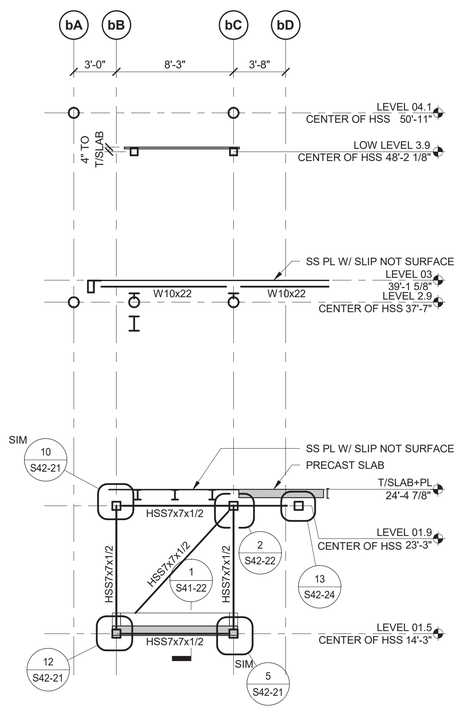

NOTE:
1. STEEL ELEVATIONS DENOTE CENTERLINE OF HSS SHAPES UON.

1 ELEVATION AT GRID b6
3/16" = 1'-0"

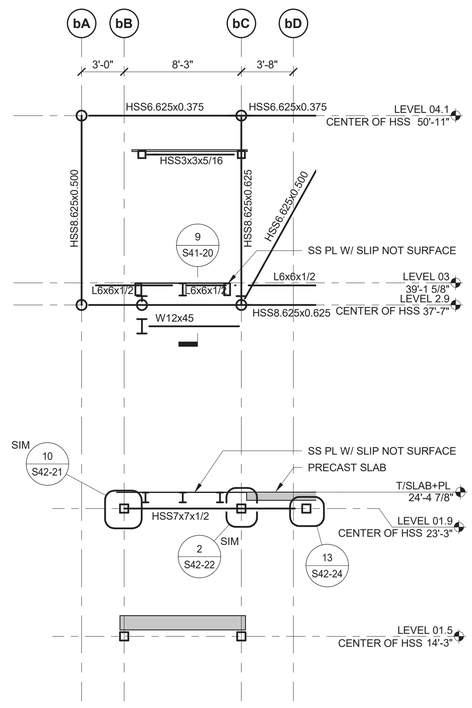

NOTE:
1. STEEL ELEVATIONS DENOTE CENTERLINE OF HSS SHAPES UON.

1.1 ELEVATION AT GRID b7
3/16" = 1'-0"

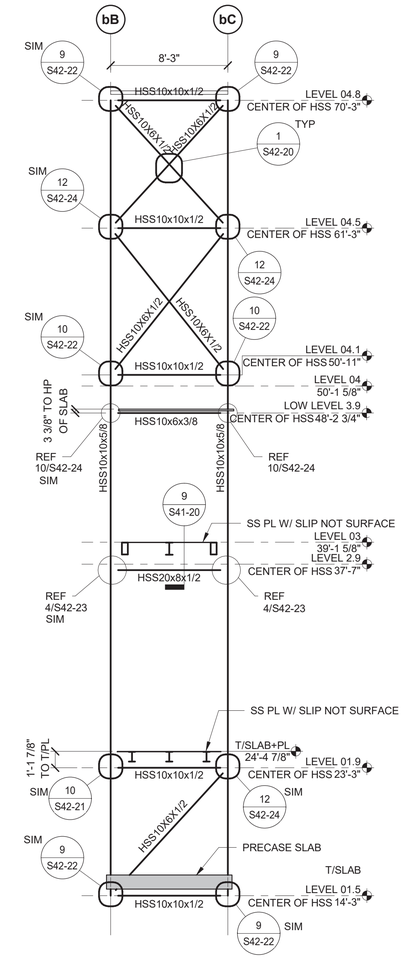

NOTE:
1. STEEL ELEVATIONS DENOTE CENTERLINE OF HSS SHAPES UON.

2 ELEVATION AT GRID b8
3/16" = 1'-0"

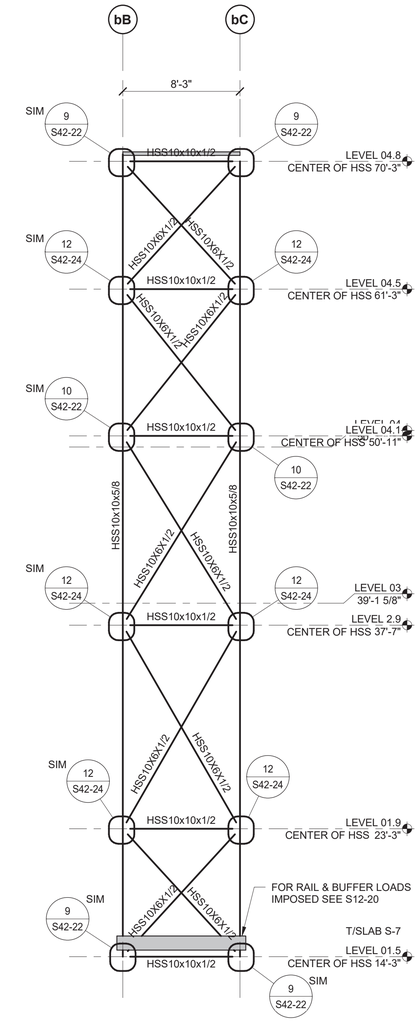

NOTE:
1. STEEL ELEVATIONS DENOTE CENTERLINE OF HSS SHAPES UON.

3 ELEVATION AT GRID b9
3/16" = 1'-0"

DESIGN BY:									
DRAWN BY:									
CHECKED BY:									
APPROVED BY:			01/27/2020	ISSUE FOR BID	EJT	HMM	TRM		
CDOT/APPROVED BY:		NO.	DATE	REVISIONS	DES.	DRW.	CHK.	DCCO	CDOT

SIMPSON GUMPERTZ & HEGER
Engineering of Structures and Building Enclosures
Simpson Gumpertz & Heger Inc.
135 South LaSalle Street, Suite 3800
Chicago, Illinois 60603
main: 312.754.7500 fax: 312.754.7501
www.sgh.com

PERKINS+WILL
The Wrigley Building
410 North Michigan Ave.
Suite 1600
Chicago, IL 60611
t 312.755.0770
f 312.755.0775
www.perkinswill.com

CDOT
CHICAGO DEPARTMENT OF TRANSPORTATION
DIVISION OF ENGINEERING

154 N DAMEN AVE - DAMEN GREEN LINE STATION

TOWER/BRIDGE - ELEVATIONS

CDOT PROJECT D-7-135

DATE: 01/27/2020

SPEC. NO.

DRAWING NO.
S20-24

REVISION NO.

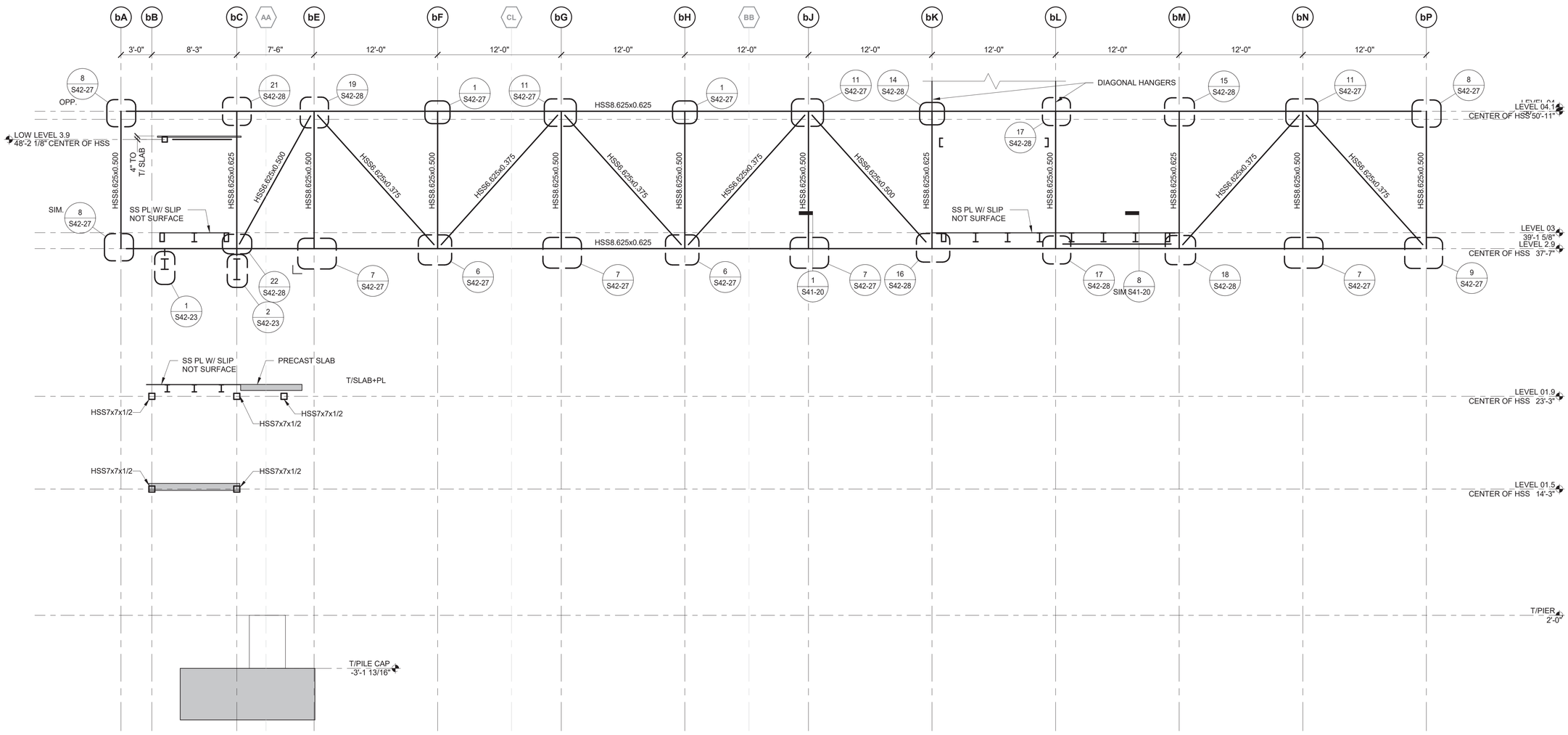

NOTE:
1. STEEL ELEVATIONS DENOTE CENTERLINE OF HSS SHAPES UON.

1 ELEVATION AT GRID b5

3/16" = 1'-0"

DESIGN BY:									
DRAWN BY:									
CHECKED BY:									
APPROVED BY:			01/27/2020	ISSUE FOR BID	EJT	MW	TRM		
CDOT/APPROVED BY:		NO.	DATE	REVISIONS	DES.	DRW.	CHK.	DCCO	CDOT

SIMPSON GUMPERTZ & HEGER
Engineering of Structures and Building Enclosures
Simpson Gumpertz & Heger Inc.
135 South LaSalle Street, Suite 3800
Chicago, Illinois 60603
main: 312.754.7500 fax: 312.754.7501
www.sgh.com

PERKINS+WILL
The Wrigley Building
410 North Michigan Ave.
Suite 1600
Chicago, IL 60611
t 312.755.0770
f 312.755.0775
www.perkinswill.com

CDOT
CHICAGO DEPARTMENT OF TRANSPORTATION
DIVISION OF ENGINEERING

154 N DAMEN AVE - DAMEN GREEN LINE STATION

TOWER/BRIDGE - ELEVATIONS

CDOT PROJECT D-7-135 | DATE: 01/27/2020

SPEC. NO.

DRAWING NO. **S20-25**

REVISION NO.

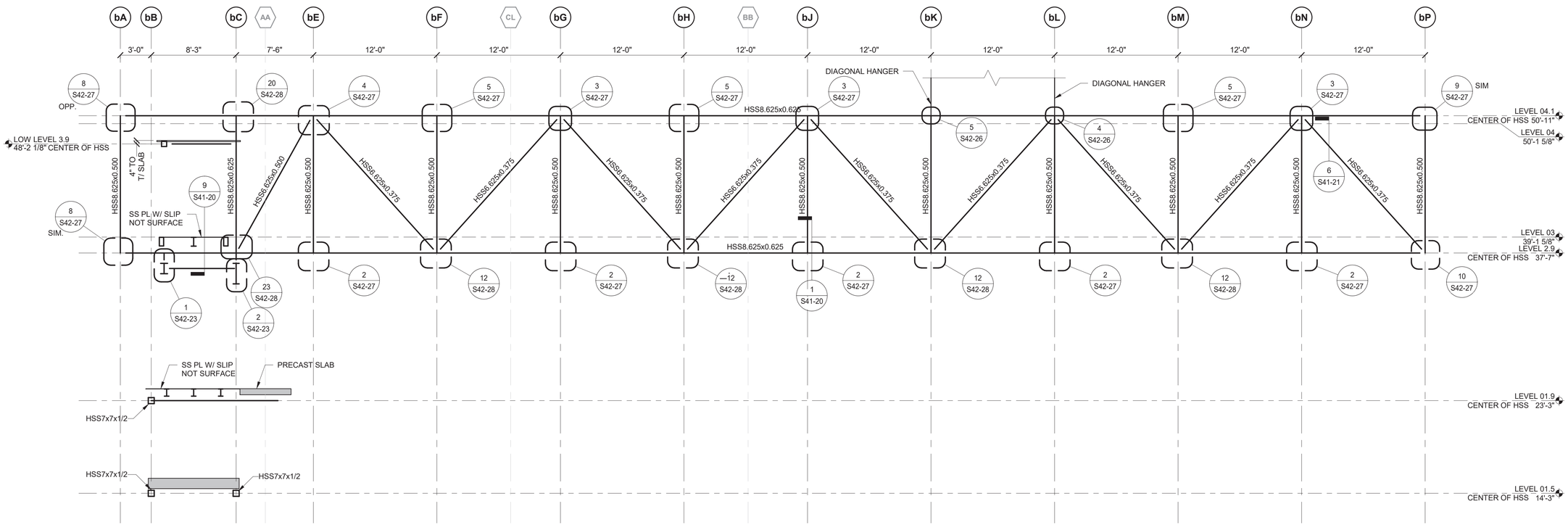

NOTE:
1. STEEL ELEVATIONS DENOTE CENTERLINE OF HSS SHAPES UON.

1 ELEVATION AT GRID b7
3/16" = 1'-0"

DESIGN BY:									
DRAWN BY:									
CHECKED BY:									
APPROVED BY:			01/27/2020	ISSUE FOR BID	EJT	HMM	TRM		
CDOT/APPROVED BY:		NO.	DATE	REVISIONS	DES.	DRW.	CHK.	DCCO	CDOT

SIMPSON GUMPERTZ & HEGER
Engineering of Structures and Building Enclosures
Simpson Gumpertz & Heger Inc.
135 South LaSalle Street, Suite 3800
Chicago, Illinois 60603
main: 312.754.7500 fax: 312.754.7501
www.sgh.com

PERKINS+WILL
The Wrigley Building
410 North Michigan Ave.
Suite 1600
Chicago, IL 60611
t 312.755.0770
f 312.755.0775
www.perkinswill.com

CDOT
CHICAGO DEPARTMENT OF TRANSPORTATION
DIVISION OF ENGINEERING

154 N DAMEN AVE - DAMEN GREEN LINE STATION

TOWER/BRIDGE - ELEVATIONS

CDOT PROJECT D-7-135

DATE: 01/27/2020

SPEC. NO.

DRAWING NO.
S20-26

REVISION NO.

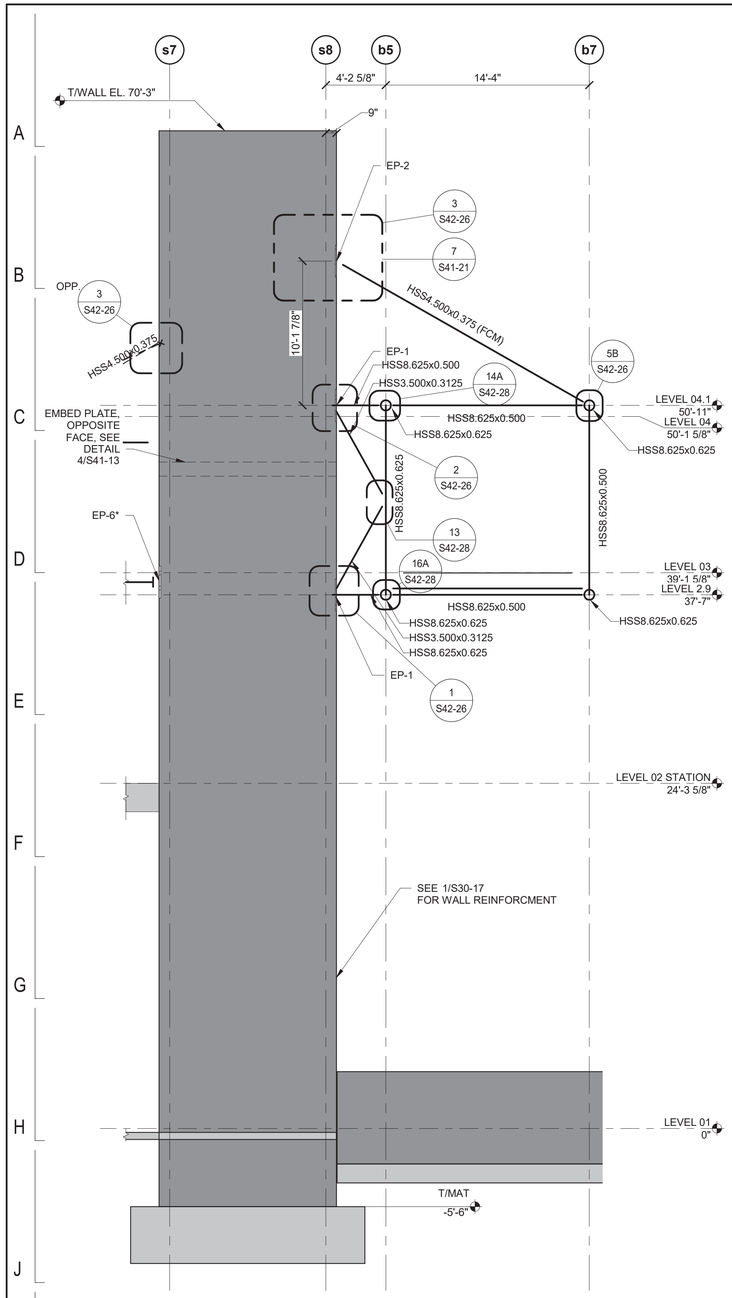

NOTES:
1. FOR MEMBERS INDICATED AS FCM, SEE GENERAL NOTES FOR ADDITIONAL INFORMATION. FCM INCLUDES THE MEMBER AND ALL CONNECTION MATERIAL

1 ELEVATION AT GRID bK/sD
3/16" = 1'-0"

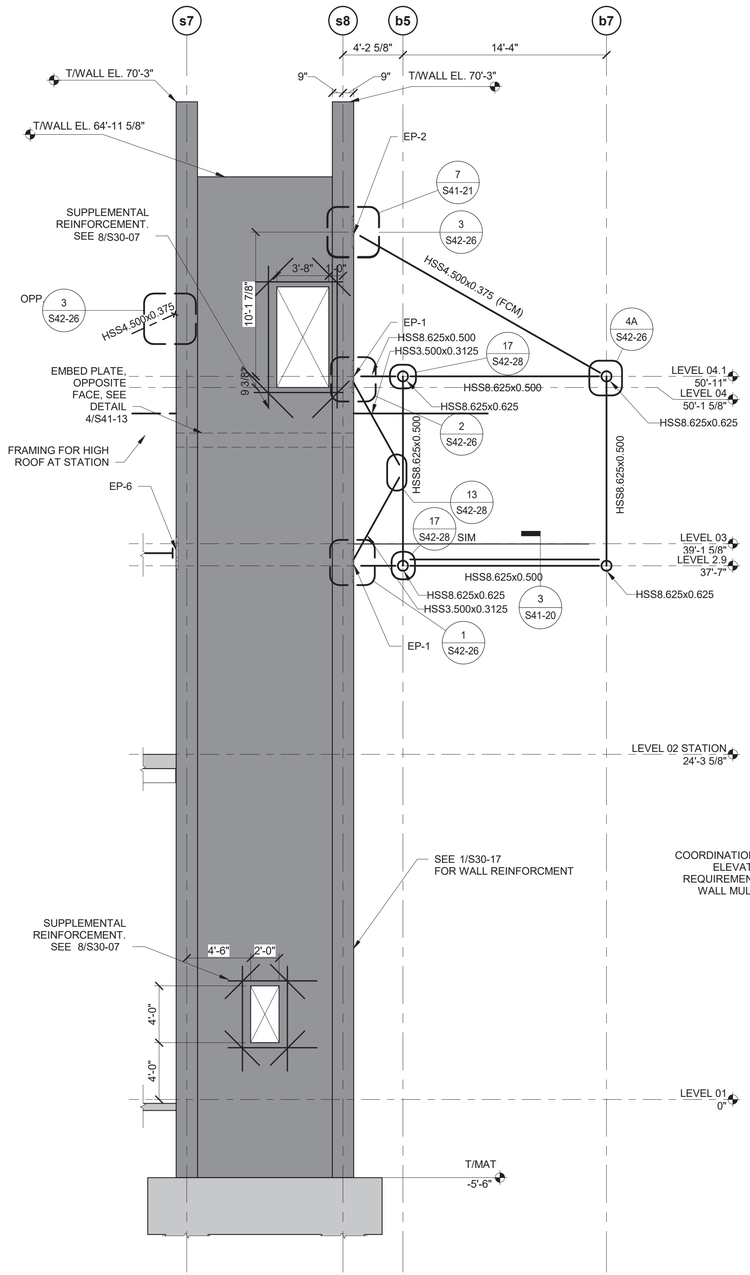

NOTES:
1. FOR MEMBERS INDICATED AS FCM, SEE GENERAL NOTES FOR ADDITIONAL INFORMATION. FCM INCLUDES THE MEMBER AND ALL CONNECTION MATERIAL

2 ELEVATION AT GRID bL/sF
3/16" = 1'-0"

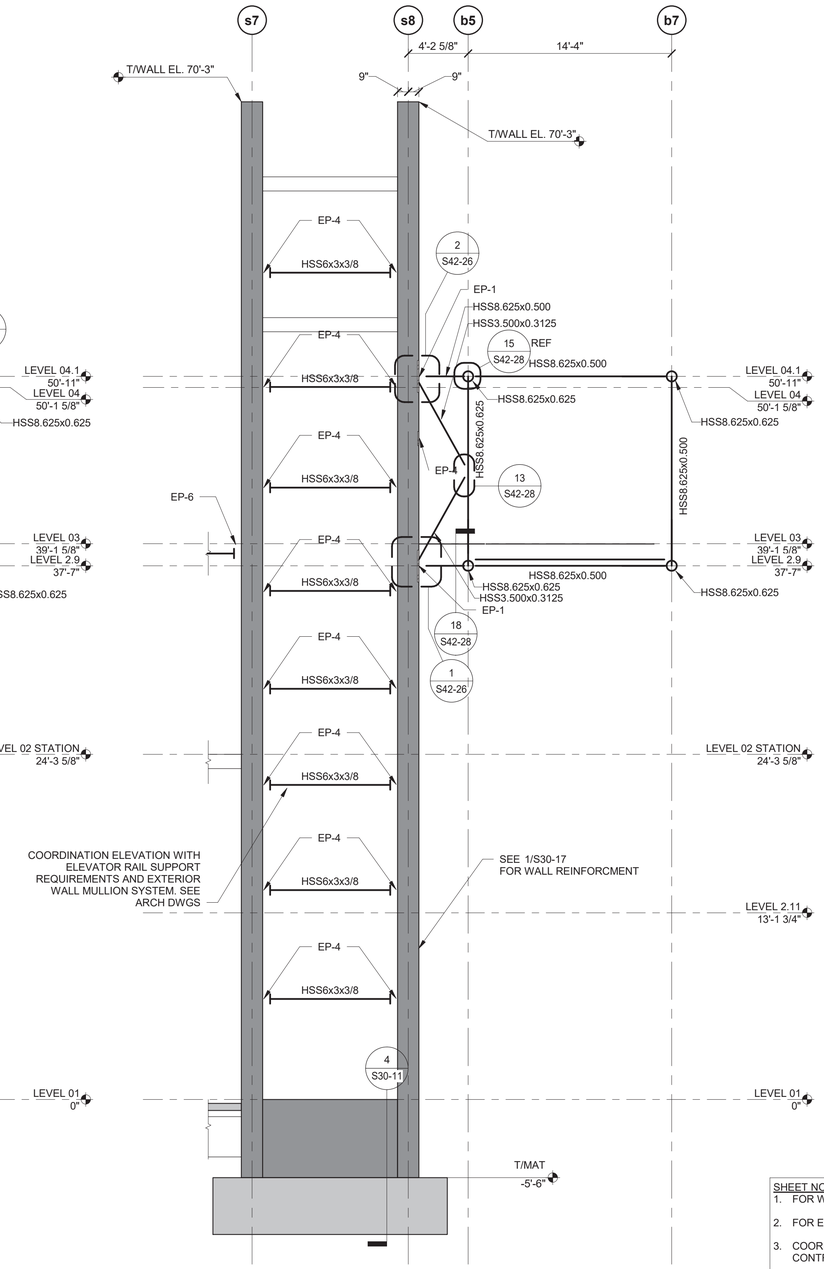

3 ELEVATION AT GRID bM/sG.5
3/16" = 1'-0"

SHEET NOTES:
1. FOR WALL REINFORCEMENT, SEE 1/S30-17 .
2. FOR EMBED PLATE SCHEDULE, SEE 5/S41-00.
3. COORDINATE LOCATION WITH GLAZING CONTRACTOR AND ELEVATOR MANUFACTURER.
4. STEEL ELEVATIONS DENOTE CENTERLINE OF HSS SHAPES, UON.
5. EMBED PLATE ALIGN WITH CENTERLINE OF STEEL SHAPES UON.

DESIGN BY:									
DRAWN BY:									
CHECKED BY:									
APPROVED BY:			01/27/2020	ISSUE FOR BID	EJT	MW	TRM		
CDOT/APPROVED BY:		NO.	DATE	REVISIONS	DES.	DRW.	CHK.	DCCO	CDOT

SIMPSON GUMPERTZ & HEGER
Engineering of Structures and Building Enclosures
Simpson Gumpertz & Heger Inc.
135 South LaSalle Street, Suite 3800
Chicago, Illinois 60603
main: 312.754.7500 fax: 312.754.7501
www.sgh.com

PERKINS+WILL
The Wrigley Building
410 North Michigan Ave.
Suite 1600
Chicago, IL 60611
t 312.755.0770
f 312.755.0775
www.perkinswill.com

CDOT
CHICAGO DEPARTMENT OF TRANSPORTATION
DIVISION OF ENGINEERING

154 N DAMEN AVE - DAMEN GREEN LINE STATION

TOWER/BRIDGE - ELEVATIONS

CDOT PROJECT D-7-135 | DATE: 01/27/2020

SPEC. NO.

DRAWING NO. **S20-27**

REVISION NO.

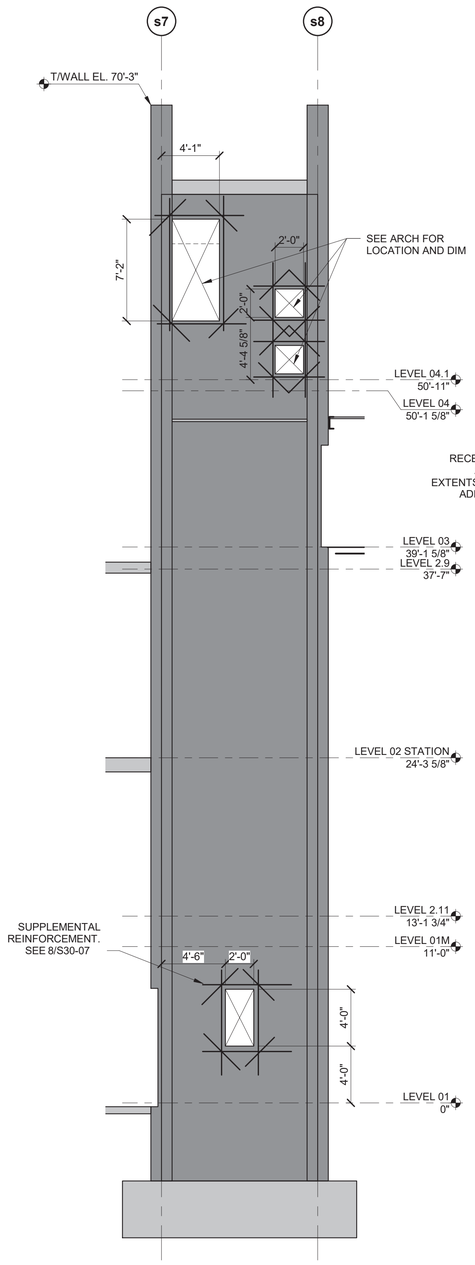

3 Elevation 6 - a
3/16" = 1'-0"

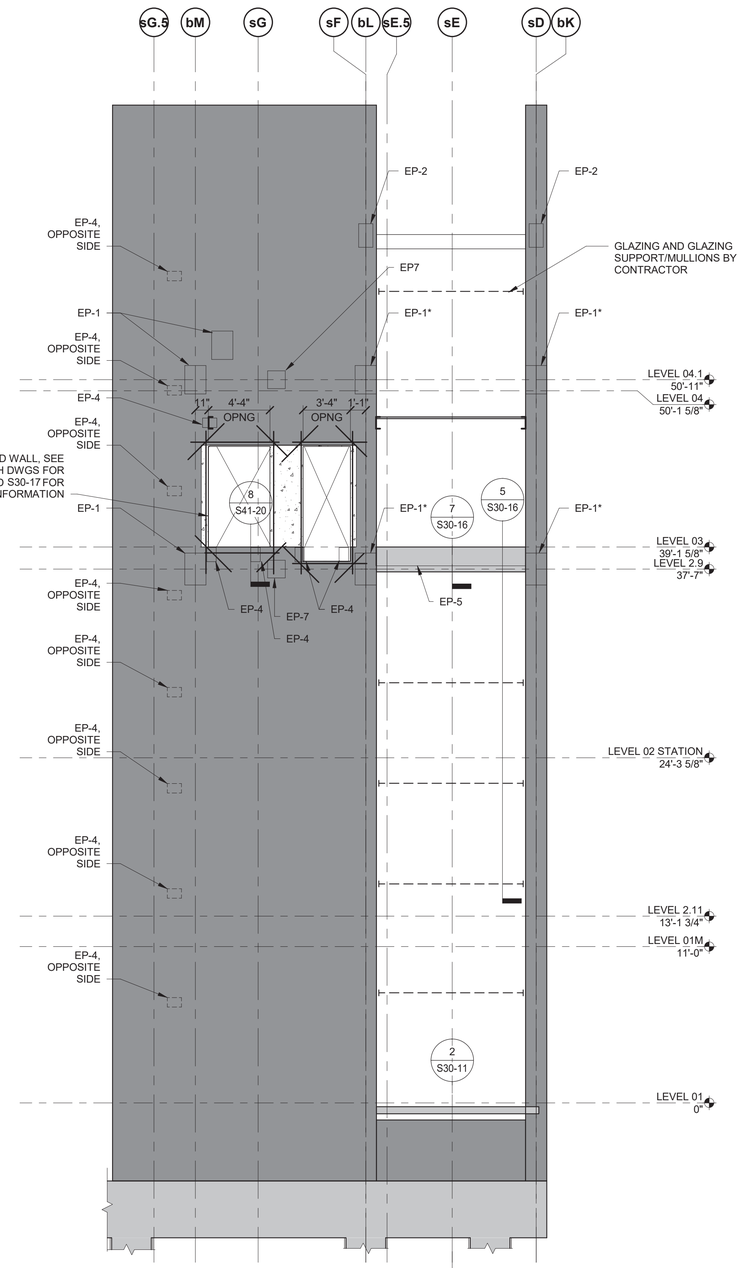

1 ELEVATION AT GRID s8
3/16" = 1'-0"

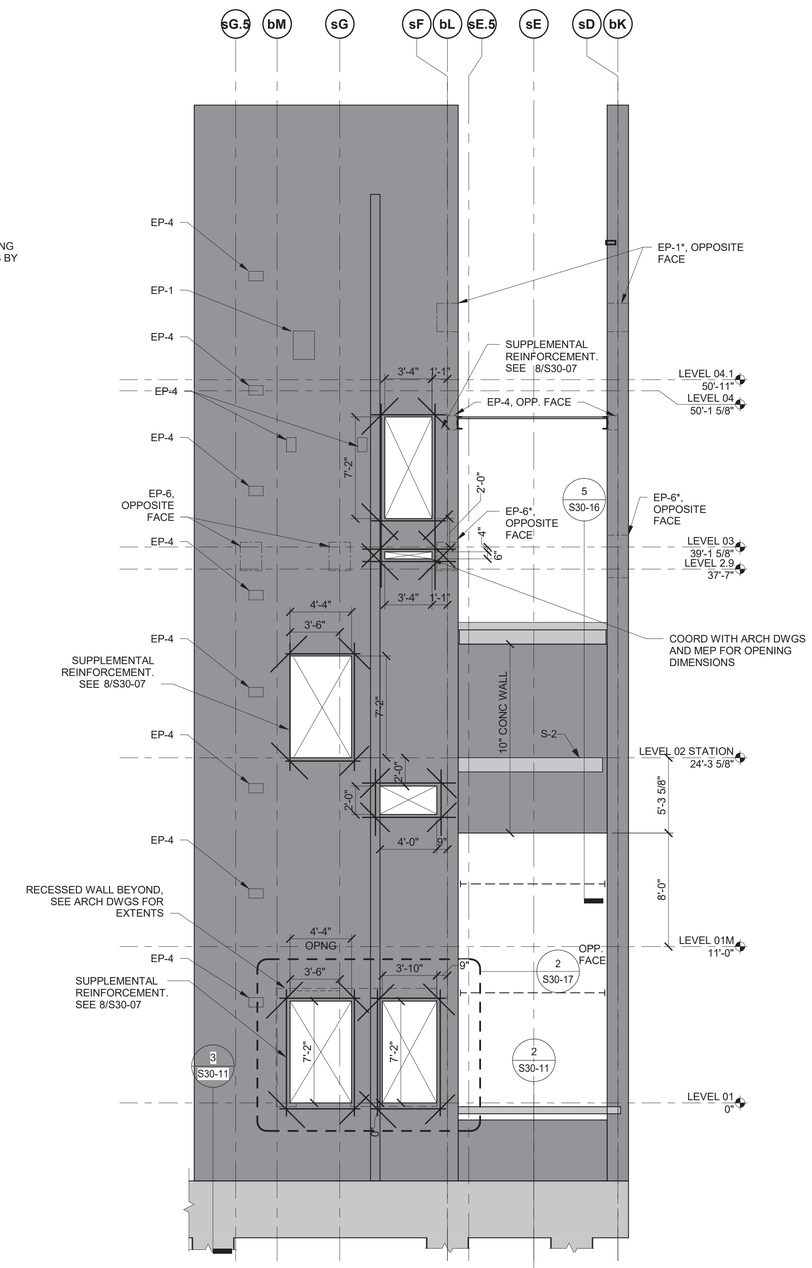

2 ELEVATION AT GRID s7
3/16" = 1'-0"

SHEET NOTES:
1. FOR WALL REINFORCEMENT, SEE 1/S30-17 .
2. FOR EMBED PLATE SCHEDULE, SEE 5/S41-00.
3. COORDINATE LOCATION WITH GLAZING CONTRACTOR AND ELEVATOR MANUFACTURER.
4. STEEL ELEVATIONS DENOTE CENTERLINE OF HSS SHAPES, UON.
5. EMBED PLATE ALIGN WITH CENTERLINE OF STEEL SHAPES UON.

DESIGN BY:								
DRAWN BY:								
CHECKED BY:								
APPROVED BY:			01/27/2020	ISSUE FOR BID	EJT	HMM	TRM	
CDOT/APPROVED BY:		NO.	DATE	REVISIONS	DES.	DRW.	CHK.	DCCO	CDOT

SIMPSON GUMPERTZ & HEGER
Engineering of Structures and Building Enclosures
Simpson Gumpertz & Heger Inc.
135 South LaSalle Street, Suite 3800
Chicago, Illinois 60603
main: 312.754.7500 fax: 312.754.7501
www.sgh.com

PERKINS+WILL
The Wrigley Building
410 North Michigan Ave.
Suite 1600
Chicago, IL 60611
t 312.755.0770
f 312.755.0775
www.perkinswill.com

CDOT
CHICAGO DEPARTMENT OF TRANSPORTATION
DIVISION OF ENGINEERING

154 N DAMEN AVE - DAMEN GREEN LINE STATION

TOWER/BRIDGE - ELEVATIONS

CDOT PROJECT D-7-135 | DATE: 01/27/2020

SPEC. NO.

DRAWING NO. S20-28

REVISION NO.

1 PLATFORM OVERALL 3D

DESIGN BY:								
DRAWN BY:								
CHECKED BY:								
APPROVED BY:		01/27/2020	ISSUE FOR BID	CJB	MW	TRM		
CDOT/APPROVED BY:		NO.	DATE	REVISIONS	DES.	DRW.	CHK.	DCCO	CDOT

SIMPSON GUMPERTZ & HEGER
Engineering of Structures and Building Enclosures
Simpson Gumpertz & Heger Inc.
135 South LaSalle Street, Suite 3800
Chicago, Illinois 60603
main: 312.754.7500 fax: 312.754.7501
www.sgh.com

PERKINS+WILL
The Wrigley Building
410 North Michigan Ave.
Suite 1600
Chicago, IL 60611
t 312.755.0770
f 312.755.0775
www.perkinswill.com

CDOT
CHICAGO DEPARTMENT OF TRANSPORTATION
DIVISION OF ENGINEERING

154 N DAMEN AVE - DAMEN GREEN LINE STATION

PLATFORM 3D OVERALL

CDOT PROJECT D-7-135

DATE: 01/27/2020

SPEC. NO.

DRAWING NO. **S21-30**

REVISION NO.

GENERAL RIVET REMOVAL AND REPLACEMENT (RR)

1. Rivets denoted on these drawings requiring replacement have severely corroded top heads. Rivets requiring replacement are denoted as **RR** on the elevation views of the girder bents, with notation as follows:

   (25) RR -East
   - -East: Side of Girder, as applicable (East or West)
   - RR: RR = Rivet Replacement
   - (25): No. of rivets to be replaced

2. At locations shown on the drawings, remove and replace corroded rivets or rivets with significantly deteriorated heads. Actual rivets requiring replacement in an area shall be identified in the field by the Commissioner. Contractor shall remove/replace existing rivets one at a time.
3. Repairs detailed herein may require minor field adjustment to fit actual as-built conditions. This cost is incidental to the repair costs.
4. The Contractor shall note that high-strength bolts are used in place of the original rivets. It is anticipated this change may cause some interferences and erection conflicts for bolt installation. The Contractor and the Fabricator shall review the drawings for such conflicts in detail and bring them to the attention of the Commissioner for resolution prior to fabrication. The Contractor shall verify the fit and clearance of all new components connecting to existing or replaced sections of the structure. Where interferences occur, the Contractor shall use clipped washers, trim the edge of interfering member or install countersunk bolts as possible mitigating solutions. All modifications must be approved by the Commissioner prior to implementation.
5. Install ¾ in. ϕ A325 high-strength bolts in the existing rivet holes or new 15/16 in. ϕ open holes, unless noted otherwise. Field verify existing rivet hole diameter after rivet removal, and reamin (if required).
6. Where possible, bolt heads shall be on the outside exposed side of the member. New hardened washers shall be used under all tightened bolt elements. In vertical orientations, the bolt head shall be inserted to be upward.
7. Tighten replacement high-strength bolts in the existing rivet holes for RR repair in accordance with RCSC Specification for Structural Joints Using High-Strength Bolts for snug tight joints.
8. Locally grind horizontal or vertical steel surfaces exhibiting severe pitting corrosion to obtain a level or normal surface for bolt washer bearing. Consider using clipped hardened washers or hardened bevel washers on uneven steel bearing surfaces if the pitting damage / surface amplitude is severe.
9. No more than two (2) rivets shall be removed at one time leaving two open holes and replacing with new high-strength bolts, before removing the next pair of rivets.
10. If the resultant hole is larger than 1 in. ϕ or the steel plies are misaligned in the hole, the Contractor shall bring the condition to the attention of the Commissioner. Such holes shall be reamed and an A325 high-strength bolt of larger diameter shall be placed in the hole. New bolt diameter shall be selected based on the resultant diameter of the reamed hole (minus 1/16 in.).
11. All reamed holes shall be round and shall not be oversized. All new plates shall be hot dip galvanized.
12. At abandoned rivet holes that do not line up with new steel plies, install polyurethane or silicone sealant to completely fill the existing hole to prevent moisture collection.
13. The two rivet removal techniques presented below are suggested procedures. The Chip and Punch Procedure is the basis of design. The Contractor or Steel Subcontractor shall submit a written procedure for their rivet removal procedure(s) to be used on this project for approval by the Commissioner.
14. Noise mitigation procedures are required during rivet removal.

Chip and Punch Procedure - Rivet Shank is Not Deformed (Basis of Design)

1. **Step 1 - Chip:** Using a rivet buster with a chisel tip, chip off the rivet head. Apply force to head at the shallowest possible angle to avoid damaging or gouging the parent steel.
2. **Step 2 - Punch:** Using a rivet buster with a round, back-out punch bit, punch out the rivet shank on the end where the head was removed.
3. During the shank punching operation, the Contractor shall catch or provide other means to collect / safely deflect the rapidly expelled rivet shanks to prevent injury to surrounding surfaces or workers.
4. Ream the existing hole thorugh the steel plies to remove slab or other irregularities in the hole surface with 1 1/16" diameter reamers, or grind with die grinder. If hole has gouges, use die grinder to remove gouges.

Cut and Wash Procedure - Rivet Shank is Deformed (Alternate)

1. This procedure shall only be used if the basis of design method is ineffective and with the Commissioner's approval at every bolt location.
2. Any cut and/or wash procedures used to remove rivets shall be submitted for approval by the CTA. The approval shall be contingent on the subcontractor physically demonstrating his procedures in the field to exhibit limited or no damage to the parent steel member. Use of this procedure is anticipated to be very limited.
3. **Step 1 - Cut:** Using rivet buster with a chisel tip, orient the tip perpendicular to the shank and cut off the rivet head. Avoid gouging, scoring, or damaging the parent steel. Remove both heads of the rivet.
4. **Step 2 - Wash:** Using plasma cutter, orient the tip parallel to the longitudinal axis of the shank and blow through the center of the rivet shank to create a relief hole. Keep the burn hole straight and square to the piece, enlarging the hole from inside to outside. Avoid overheating or damaging the adjacent steel.
5. **Step 3 – Removal:** Use a flat pin punch and hammer (or Step 2 in the Chip & Punch procedure above) to drive out the remaining shank from the hole.
6. If the remaining rivet shaft cannot be backed out, then burn out remaining rivet shaft using plasma cutter without damaging adjacent material. Mark the burned hole. Contractor to note burned hole location with as repaired with submittal.
7. Ream the existing hole through the steel plies to remove slag or other irregularities in the hole surface with 1 1/16" diameter reamers, or grind with die grinder. If hole has gouges, use die grinder to remove gouges.

INSTALL NEW BOLT IN EXISTING OPEN HOLE (BOH)

1. Open rivet or bolt holes occur in the existing steel. At drawing designated locations or locations identified by the Commissioner, insert a new high-strength bolt to fill the hole and prevent further moisture intrusion.
2. Open holes requiring new bolt insertion are denoted as **BOH** on the elevation views of the girder bents, with notation as follows:

   (3) BOH -West
   - -West: Side of Girder, as applicable (East or West). Omitted for horiz. flange
   - BOH: BOH = Bolt in Open Hole
   - (3): No. of open bolt or rivet holes

3. Install a ⅞ in. ϕ A325 high-strength bolt in the existing hole, unless noted otherwise. Field verify existing hole diameter.
4. Where possible, bolt heads shall be on the outside exposed side of the member. New hardened washers shall be used under all tightened bolt elements. In vertical orientations, the bolt head shall be inserted to be upward.
5. Tighten replacement high-strength bolts in the existing holes for BOH repair in accordance with RSCS Specification for Structural Joints Using High-Strength Bolts for snug-tight joints.

NEW HOLES AND BOLTS IN EXISTING STRUCTURAL STEEL
(for New Connections)

1. Accurately locate the new bolt holes in the existing structural steel. As necessary, consider using the new fabricated steel piece as a template to help locate the new holes. New holes shall be aligned level or plumb to provide proper fit-up.
2. Use a magnetic (mag) drill to drill the new holes in the existing steel. Holes shall be true and square to the plane of the steel member being drilled. The edges of all new holes shall be dressed to a smooth, uniform surface with no notches or gouges.
3. Use water-based or biodegradable cutting fluid when cutting or drilling new holes. After all drilling operations in an area are complete, wash the steel surface with potable water to rinse off any cutting fluid residue. Allow to fully air-dry.
4. New open holes are to be drilled to 15/16 in. ϕ, unless noted otherwise and except as required by specific details. The location and diameter of holes in the new connecting material must match existing or newly drilled holes in the existing structure.
5. Prior to making connections or painting, all loose abrasives, paint, and residue shall be contained, collected, removed from the surface area and properly disposed of as specified.
6. All new faying surfaces on the existing structural steel in direct contact with new steel shall be prepared according to SSPC-SP15, *Commercial Grade Power Tool Cleaning*, using vacuum shrouded power tools equipped with HEPA filtration. The surface preparation shall remove all rust, mill scale, and existing paint from the contact surface. At the Contractors option, vacuum blast cleaning according to SSPC-SP6, *Commercial Blast Cleaning*, may be substituted for SSPC-SP15 at no additional cost to the CTA. The surface profile for new-to-existing connection surfaces shall be 1.5 to 3.5 mils (38 to 90 microns).
7. At a minimum, the faying contact surfaces shall be primed with a single coat of a Class B slip coefficient zinc-rich primer at the manufacturer's recommended dry film thickness (DFT).
8. The primer coat shall cure according to the manufacturer's instructions prior to connecting new structural steel to the existing structure.
9. All contact surfaces on new and existing steel, including connection bolts, nuts, and washers, shall be free of scale, burrs, dirt, or other foreign material, oil, existing applied paint top coat, lacquer, or other coatings that would prevent solid seating of the connecting parts.

REPLACE BROKEN KEEPER BOLTS (KB)
(at Bent 2224 and 2228 expansion joint track stringer connections)

1. Survey existing track stringer to bent girder connection at expansion joints to identify extent and location of broken and/or missing keeper bolts.
2. Replace keeper bolts with new A307 bolts or F1554 Gr. 36 threaded rods. Match length and diameter of existing keeper bolts.

FLANGE PLATE REPAIR (FPR)
(at track stringer between Bent 2218-2219)

1. See S11-32A for approximate location.
2. Refer to details on this sheet for flange plate repair.

REPAIR QUANTITIES

Repair	Unit	Quantity
Rivet Replacement - RR	Each	500
Bolt in Open Hole - BOH	Each	76
Replace Keeper Bolt - KB	Each	25
Flange Plate - FPR	Each	1

NOTES:
1. INCLUDE INDICATED REPAIR QUANTITIES IN BID. PROVIDE UNIT PRICING.
2. QUANTITIES DO NOT INCLUDE RIVET REMOVAL ASSOCIATED WITH NEW PLATFORM/COLUMN CONNECTIONS TO EXISTING STRUCTURE WHICH IS COST IS INCIDENTAL TO THE WORK.

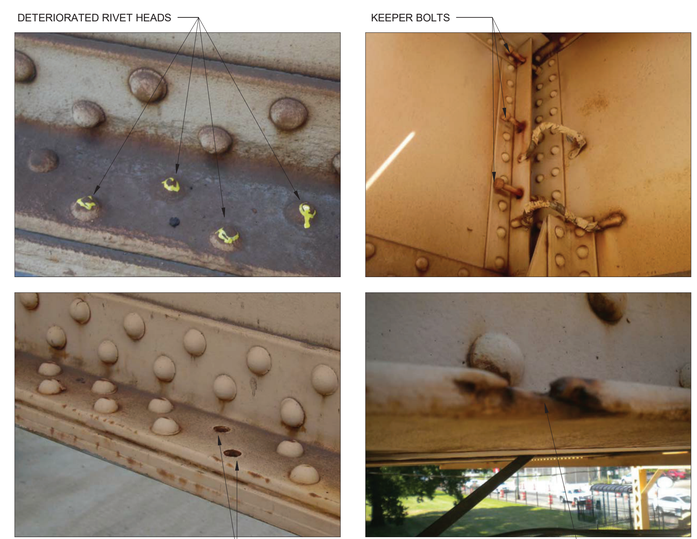

NOTES:
1. PHOTOS SHOWN ARE REPRESENTATIVE AND FOR REFERENCE ONLY.
2. REFER TO BENT GIRDER ELEVATION S(S21-3#) AND PLANS (S11-32) FOR REPAIR LOCATIONS.
3. FOR ADDITIONAL INFORMATION, REFER TO EXISTING STRUCTURE CONDITION ASSESSMENT REPORT FOR THE NEW DAMEN GREEN LINE STATION, PREPARED BY SIMPSON GUMPERTZ & HEGER, INC. AND DATED 5 SEPTEMBER 2018.

PHOTOS - FOR REFERENCE ONLY

GENERAL MATERIAL REQUIREMENTS

1. PLATES: ASTM A36 (Fy = 36 ksi)
2. BOLTS: ASTM F3125, A325
3. NUTS: ASTM A563
4. WASHERS: ASTM F436
5. All plates, bolts, nuts, and washers used in existing track structure steel repair shall be hot-dip galvanized. See Specification 05 03 00.

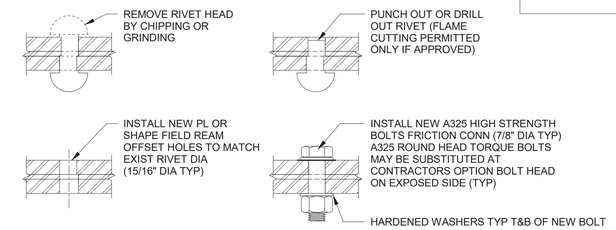

1 RIVET REPLACEMENT DETAIL (RR)
3" = 1'-0"

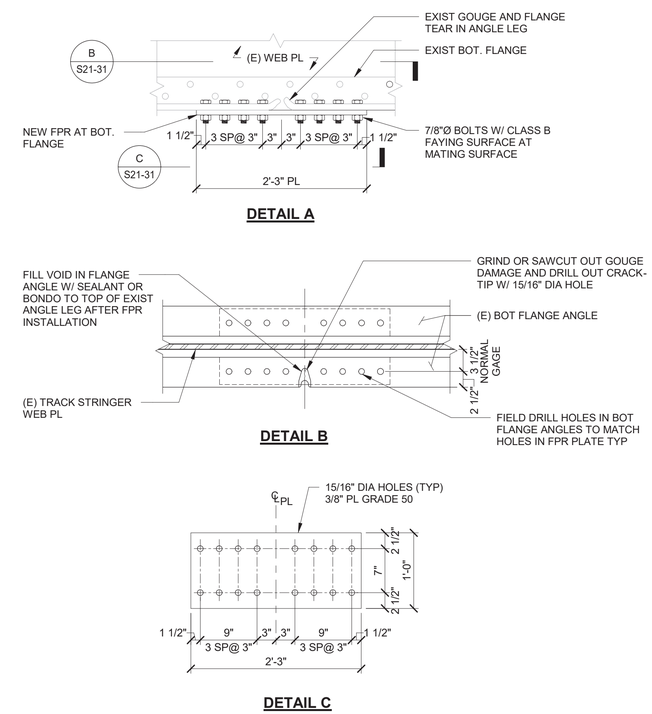

2 FLANGE PLATE REPAIR (FPR) - TRACK STRINGER 4, BENT 2218-2219
1" = 1'-0"

SHEET BEST VIEWED IN COLOR

DESIGN BY:									
DRAWN BY:									
CHECKED BY:									
APPROVED BY:			01/27/2020	ISSUE FOR BID	EJT	HMM	TRM		
CDOT/APPROVED BY:		NO.	DATE	REVISIONS	DES.	DRW.	CHK.	DCCO	CDOT

SIMPSON GUMPERTZ & HEGER
Engineering of Structures and Building Enclosures
Simpson Gumpertz & Heger Inc.
135 South LaSalle Street, Suite 3800
Chicago, Illinois 60603
main: 312.754.7500 fax: 312.754.7501
www.sgh.com

PERKINS+WILL
The Wrigley Building
410 North Michigan Ave.
Suite 1600
Chicago, IL 60611
t 312.755.0770
f 312.755.0775
www.perkinswill.com

CDOT
CHICAGO DEPARTMENT OF TRANSPORTATION
DIVISION OF ENGINEERING

154 N DAMEN AVE - DAMEN GREEN LINE STATION

EXISTING TRACK STRUCTURE STEEL REPAIR NOTES

CDOT PROJECT D-7-135 | DATE: 01/27/2020

SPEC. NO.

DRAWING NO. **S21-31**

REVISION NO.

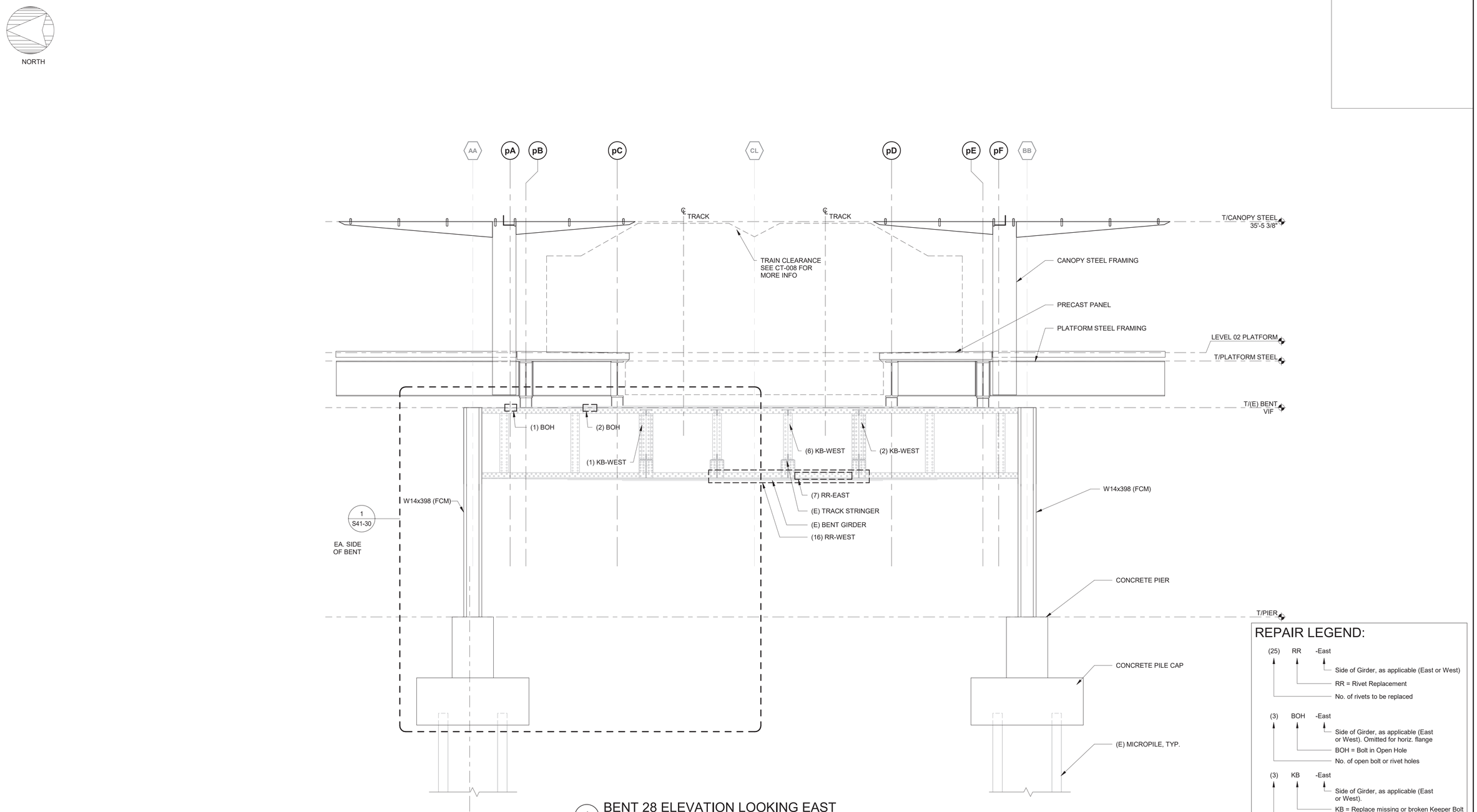

1 BENT 28 ELEVATION LOOKING EAST

1/4" = 1'-0"

DESIGN BY:									
DRAWN BY:									
CHECKED BY:									
APPROVED BY:			01/27/2020	ISSUE FOR BID	CJB	MW	TRM		
CDOT/APPROVED BY:		NO.	DATE	REVISIONS	DES.	DRW.	CHK.	DCCO	CDOT

SIMPSON GUMPERTZ & HEGER
Engineering of Structures and Building Enclosures
Simpson Gumpertz & Heger Inc.
135 South LaSalle Street, Suite 3800
Chicago, Illinois 60603
main: 312.754.7500 fax: 312.754.7501
www.sgh.com

PERKINS+WILL
The Wrigley Building
410 North Michigan Ave.
Suite 1600
Chicago, IL 60611
t 312.755.0770
f 312.755.0775
www.perkinswill.com

CDOT
CHICAGO DEPARTMENT OF TRANSPORTATION
DIVISION OF ENGINEERING

154 N DAMEN AVE - DAMEN GREEN LINE STATION

BENT 28 ELEVATION

CDOT PROJECT D-7-135 | DATE: 01/27/2020

SPEC. NO.

DRAWING NO. **S21-32**

REVISION NO.

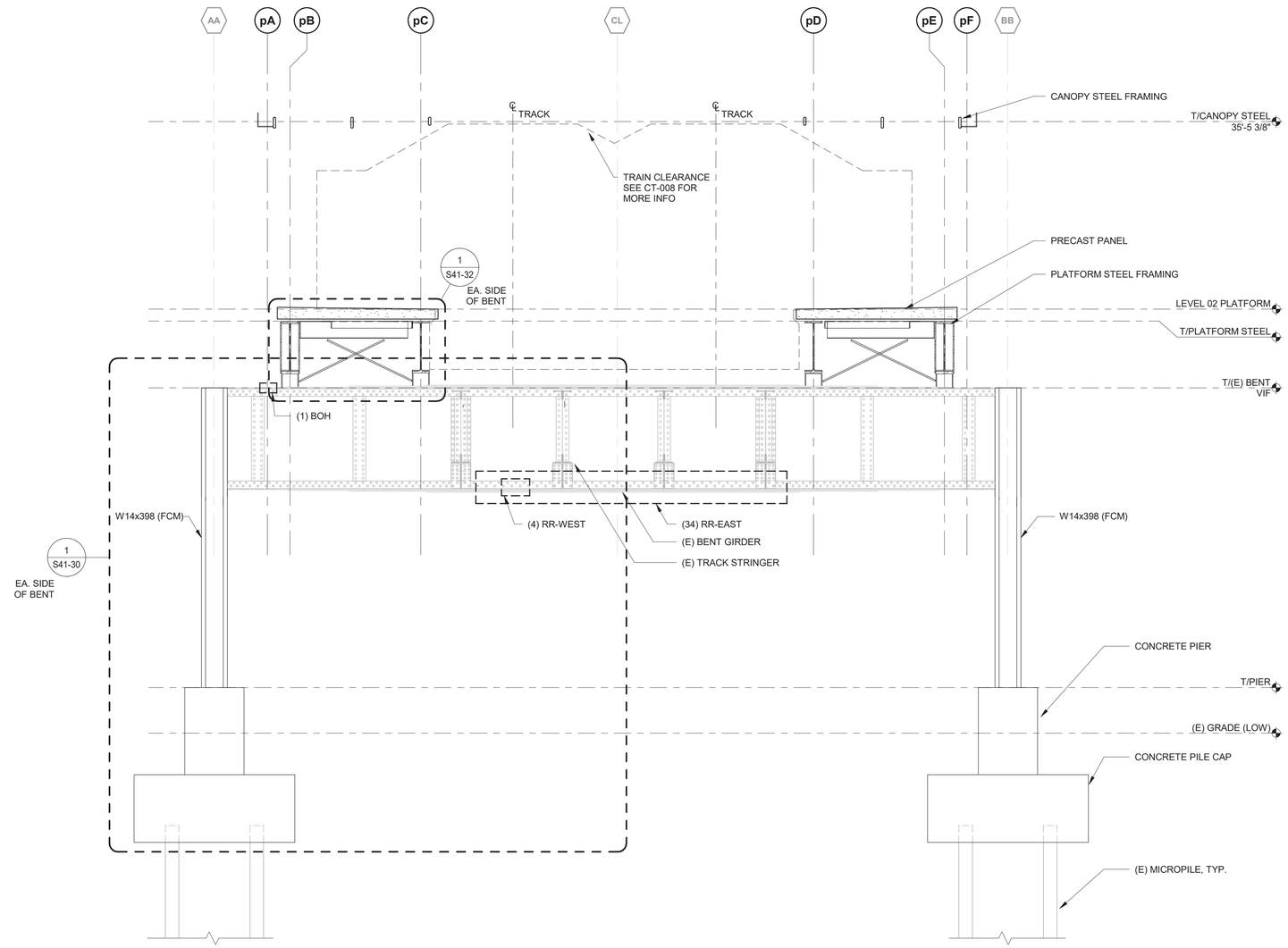

1 BENT 27 ELEVATION LOOKING EAST

1/4" = 1'-0"

REPAIR LEGEND:

(25) RR -East
- Side of Girder, as applicable (East or West)
- RR = Rivet Replacement
- No. of rivets to be replaced

(3) BOH -East
- Side of Girder, as applicable (East or West). Omitted for horiz. flange
- BOH = Bolt in Open Hole
- No. of open bolt or rivet holes

(3) KB -East
- Side of Girder, as applicable (East or West).
- KB = Replace missing or broken Keeper Bolt
- No. of missing or broken keeper bolts

DESIGN BY:									
DRAWN BY:									
CHECKED BY:									
APPROVED BY:			01/27/2020	ISSUE FOR BID	EJT	HMM	TRM		
CDOT/APPROVED BY:		NO.	DATE	REVISIONS	DES.	DRW.	CHK.	DCCO	CDOT

SIMPSON GUMPERTZ & HEGER
Engineering of Structures and Building Enclosures
Simpson Gumpertz & Heger Inc.
135 South LaSalle Street, Suite 3800
Chicago, Illinois 60603
main: 312.754.7500 fax: 312.754.7501
www.sgh.com

PERKINS+WILL
The Wrigley Building
410 North Michigan Ave.
Suite 1600
Chicago, IL 60611
t 312.755.0770
f 312.755.0775
www.perkinswill.com

CDOT
CHICAGO DEPARTMENT OF TRANSPORTATION
DIVISION OF ENGINEERING

154 N DAMEN AVE - DAMEN GREEN LINE STATION

BENT 27 ELEVATION

CDOT PROJECT D-7-135

DATE: 01/27/2020

SPEC. NO.

DRAWING NO. **S21-33**

REVISION NO.

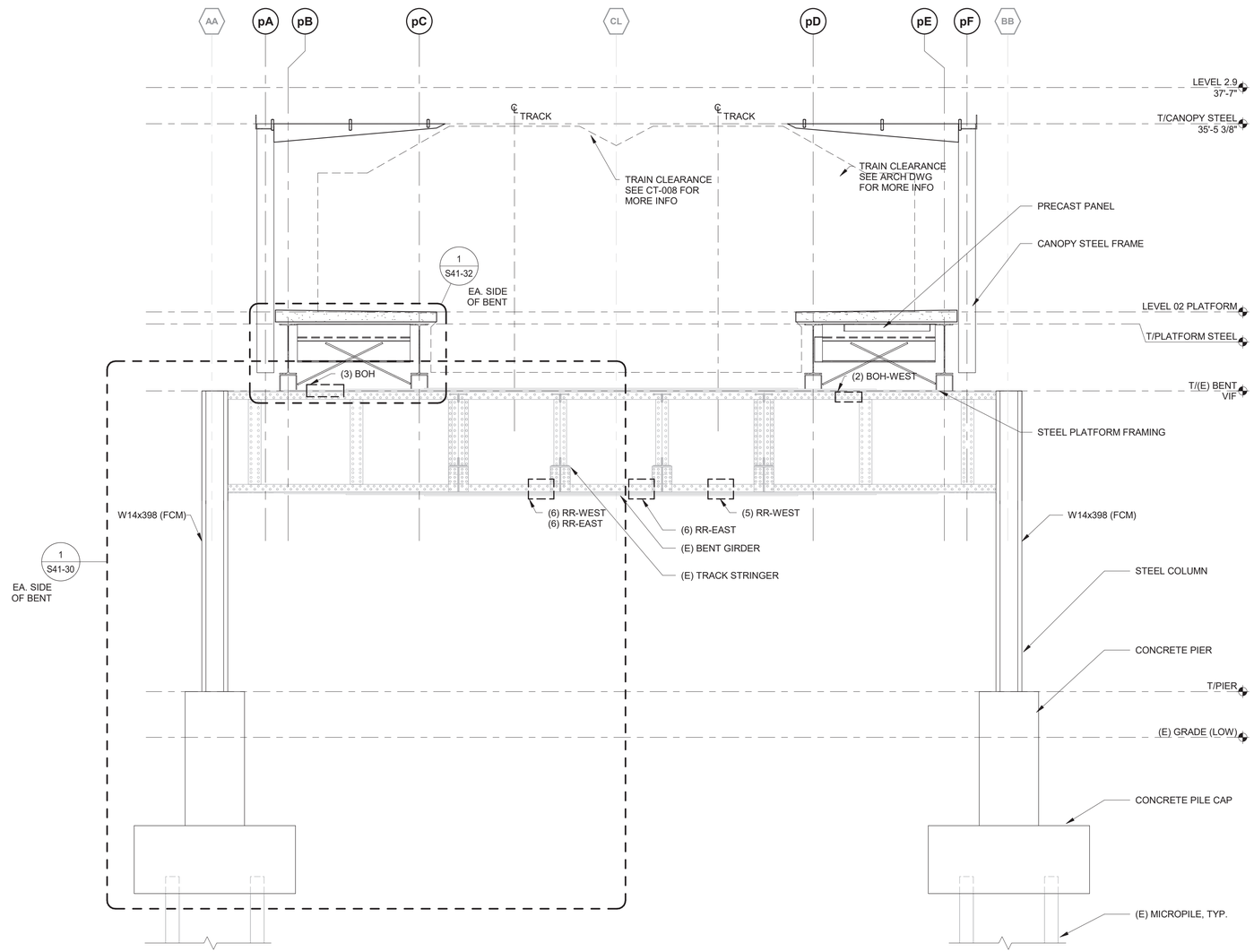

1 BENT 26 ELEVATION LOOKING EAST

1/4" = 1'-0"

REPAIR LEGEND:

(25) RR -East
- Side of Girder, as applicable (East or West)
- RR = Rivet Replacement
- No. of rivets to be replaced

(3) BOH -East
- Side of Girder, as applicable (East or West). Omitted for horiz. flange
- BOH = Bolt in Open Hole
- No. of open bolt or rivet holes

(3) KB -East
- Side of Girder, as applicable (East or West).
- KB = Replace missing or broken Keeper Bolt
- No. of missing or broken keeper bolts

DESIGN BY:									
DRAWN BY:									
CHECKED BY:									
APPROVED BY:			01/27/2020	ISSUE FOR BID	CJB	MW	TRM		
CDOT/APPROVED BY:		NO.	DATE	REVISIONS	DES.	DRW.	CHK.	DCCO	CDOT

SIMPSON GUMPERTZ & HEGER
Engineering of Structures and Building Enclosures
Simpson Gumpertz & Heger Inc.
135 South LaSalle Street, Suite 3800
Chicago, Illinois 60603
main: 312.754.7500 fax: 312.754.7501
www.sgh.com

PERKINS+WILL
The Wrigley Building
410 North Michigan Ave.
Suite 1600
Chicago, IL 60611
t 312.755.0770
f 312.755.0775
www.perkinswill.com

CDOT
CHICAGO DEPARTMENT OF TRANSPORTATION
DIVISION OF ENGINEERING

154 N DAMEN AVE - DAMEN GREEN LINE STATION

BENT 26 ELEVATION

CDOT PROJECT D-7-135

DATE: 01/27/2020

SPEC. NO.

DRAWING NO. **S21-34**

REVISION NO.

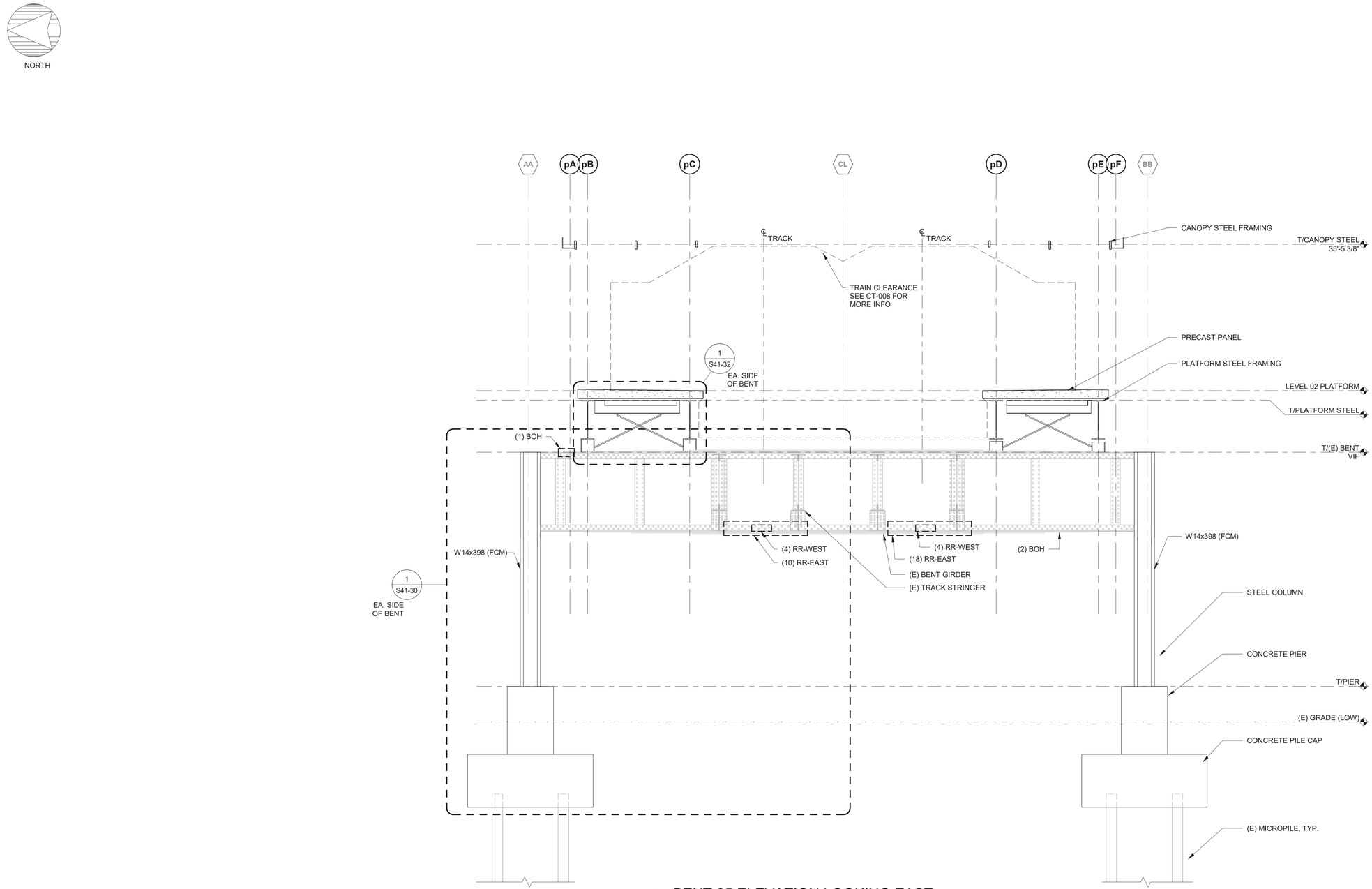

1 BENT 25 ELEVATION LOOKING EAST

1/4" = 1'-0"

REPAIR LEGEND:

(25) RR -East
- Side of Girder, as applicable (East or West)
- RR = Rivet Replacement
- No. of rivets to be replaced

(3) BOH -East
- Side of Girder, as applicable (East or West). Omitted for horiz. flange
- BOH = Bolt in Open Hole
- No. of open bolt or rivet holes

(3) KB -East
- Side of Girder, as applicable (East or West).
- KB = Replace missing or broken Keeper Bolt
- No. of missing or broken keeper bolts

DESIGN BY:									
DRAWN BY:									
CHECKED BY:									
APPROVED BY:			01/27/2020	ISSUE FOR BID	CJB	MW	TRM		
CDOT/APPROVED BY:		NO.	DATE	REVISIONS	DES.	DRW.	CHK.	DCCO	CDOT

SIMPSON GUMPERTZ & HEGER
Engineering of Structures and Building Enclosures
Simpson Gumpertz & Heger Inc.
135 South LaSalle Street, Suite 3800
Chicago, Illinois 60603
main: 312.754.7500 fax: 312.754.7501
www.sgh.com

PERKINS+WILL
The Wrigley Building
410 North Michigan Ave.
Suite 1600
Chicago, IL 60611
t 312.755.0770
f 312.755.0775
www.perkinswill.com

CDOT
CHICAGO DEPARTMENT OF TRANSPORTATION
DIVISION OF ENGINEERING

154 N DAMEN AVE - DAMEN GREEN LINE STATION

BENT 25 ELEVATION

CDOT PROJECT D-7-135

DATE: 01/27/2020

SPEC. NO.

DRAWING NO. **S21-35**

REVISION NO.

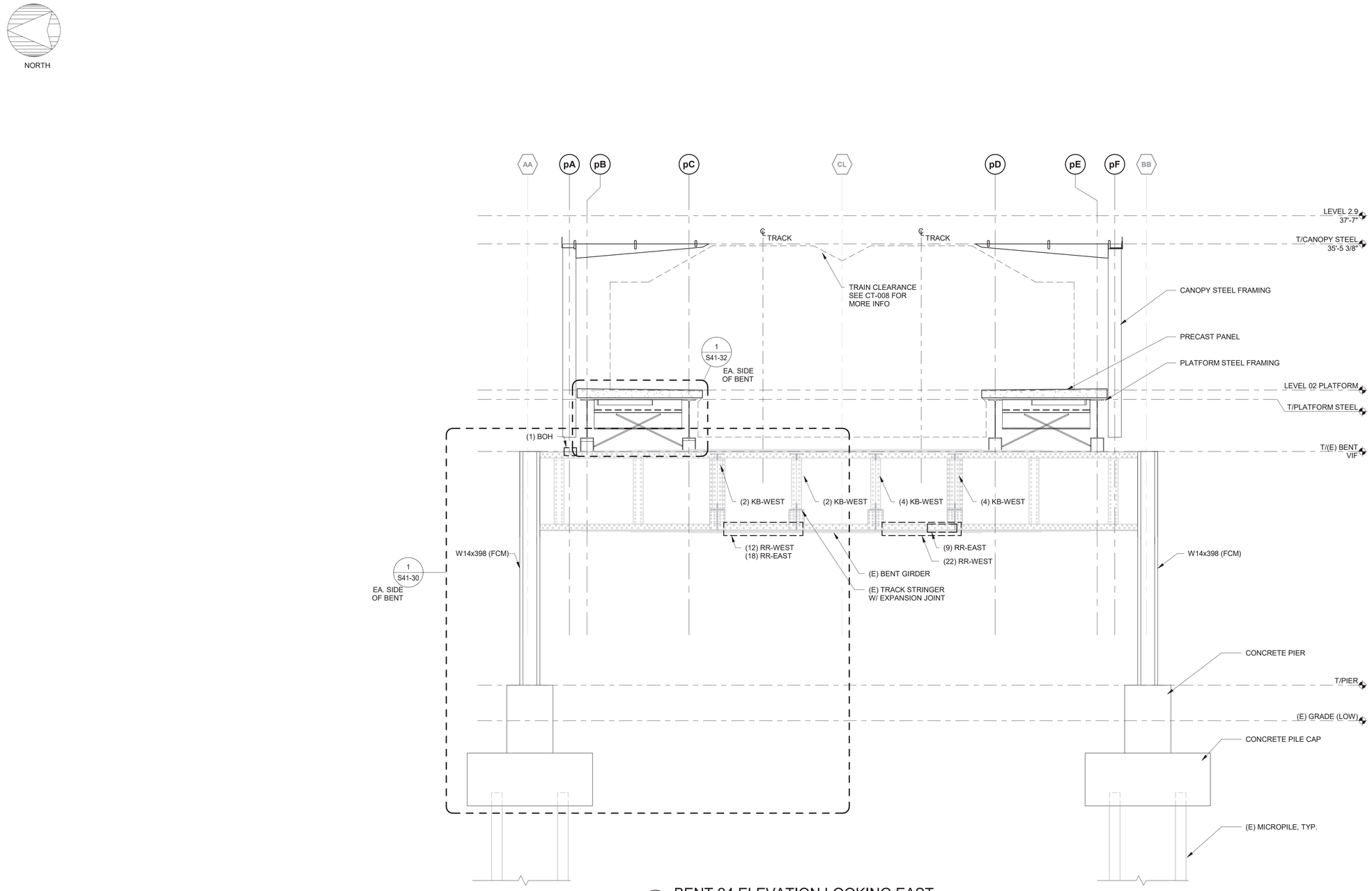

1 BENT 24 ELEVATION LOOKING EAST

1/4" = 1'-0"

REPAIR LEGEND:

(25) RR -East
- Side of Girder, as applicable (East or West)
- RR = Rivet Replacement
- No. of rivets to be replaced

(3) BOH -East
- Side of Girder, as applicable (East or West). Omitted for horiz. flange
- BOH = Bolt in Open Hole
- No. of open bolt or rivet holes

(3) KB -East
- Side of Girder, as applicable (East or West).
- KB = Replace missing or broken Keeper Bolt
- No. of missing or broken keeper bolts

DESIGN BY:									
DRAWN BY:									
CHECKED BY:									
APPROVED BY:			01/27/2020	ISSUE FOR BID	CJB	MW	TRM		
CDOT/APPROVED BY:		NO.	DATE	REVISIONS	DES.	DRW.	CHK.	DCCO	CDOT

SIMPSON GUMPERTZ & HEGER
Engineering of Structures and Building Enclosures
Simpson Gumpertz & Heger Inc.
135 South LaSalle Street, Suite 3800
Chicago, Illinois 60603
main: 312.754.7500 fax: 312.754.7501
www.sgh.com

PERKINS+WILL
The Wrigley Building
410 North Michigan Ave.
Suite 1600
Chicago, IL 60611
t 312.755.0770
f 312.755.0775
www.perkinswill.com

CDOT
CHICAGO DEPARTMENT OF TRANSPORTATION
DIVISION OF ENGINEERING

154 N DAMEN AVE - DAMEN GREEN LINE STATION

BENT 24 ELEVATION

CDOT PROJECT D-7-135 | DATE: 01/27/2020

SPEC. NO.

DRAWING NO. **S21-36**

REVISION NO.

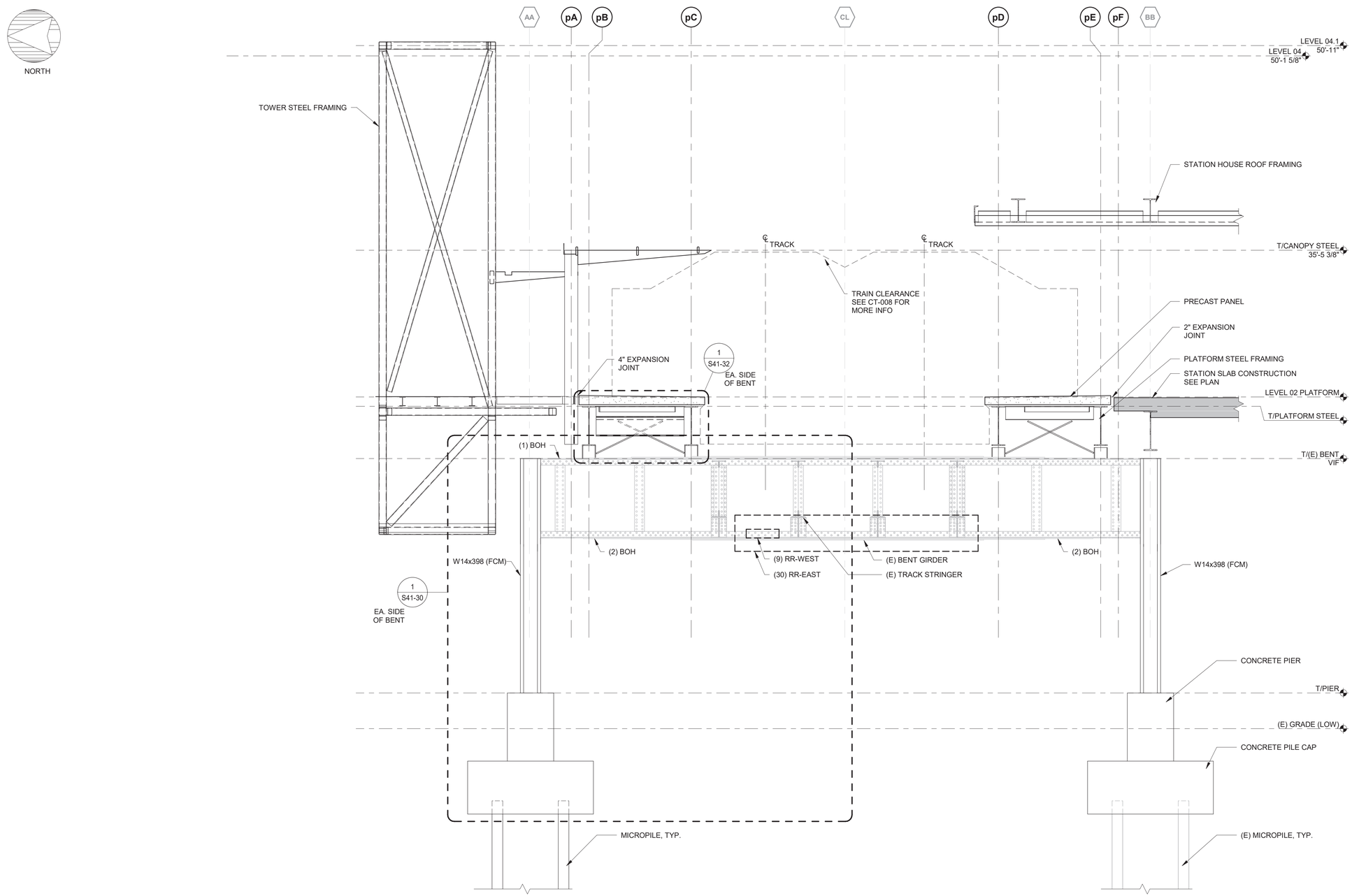

1 BENT 23 ELEVATION LOOKING EAST

1/4" = 1'-0"

REPAIR LEGEND:

(25) RR -East
- Side of Girder, as applicable (East or West)
- RR = Rivet Replacement
- No. of rivets to be replaced

(3) BOH -East
- Side of Girder, as applicable (East or West). Omitted for horiz. flange
- BOH = Bolt in Open Hole
- No. of open bolt or rivet holes

(3) KB -East
- Side of Girder, as applicable (East or West).
- KB = Replace missing or broken Keeper Bolt
- No. of missing or broken keeper bolts

DESIGN BY:									
DRAWN BY:									
CHECKED BY:									
APPROVED BY:			01/27/2020	ISSUE FOR BID	CJB	MW	TRM		
CDOT/APPROVED BY:		NO.	DATE	REVISIONS	DES.	DRW.	CHK.	DCCO	CDOT

SIMPSON GUMPERTZ & HEGER
Engineering of Structures and Building Enclosures
Simpson Gumpertz & Heger Inc.
135 South LaSalle Street, Suite 3800
Chicago, Illinois 60603
main: 312.754.7500 fax: 312.754.7501
www.sgh.com

PERKINS+WILL
The Wrigley Building
410 North Michigan Ave.
Suite 1600
Chicago, IL 60611
t 312.755.0770
f 312.755.0775
www.perkinswill.com

CDOT
CHICAGO DEPARTMENT OF TRANSPORTATION
DIVISION OF ENGINEERING

154 N DAMEN AVE - DAMEN GREEN LINE STATION

BENT 23 ELEVATION

CDOT PROJECT D-7-135 | DATE: 01/27/2020

SPEC. NO.

DRAWING NO. **S21-37**

REVISION NO.

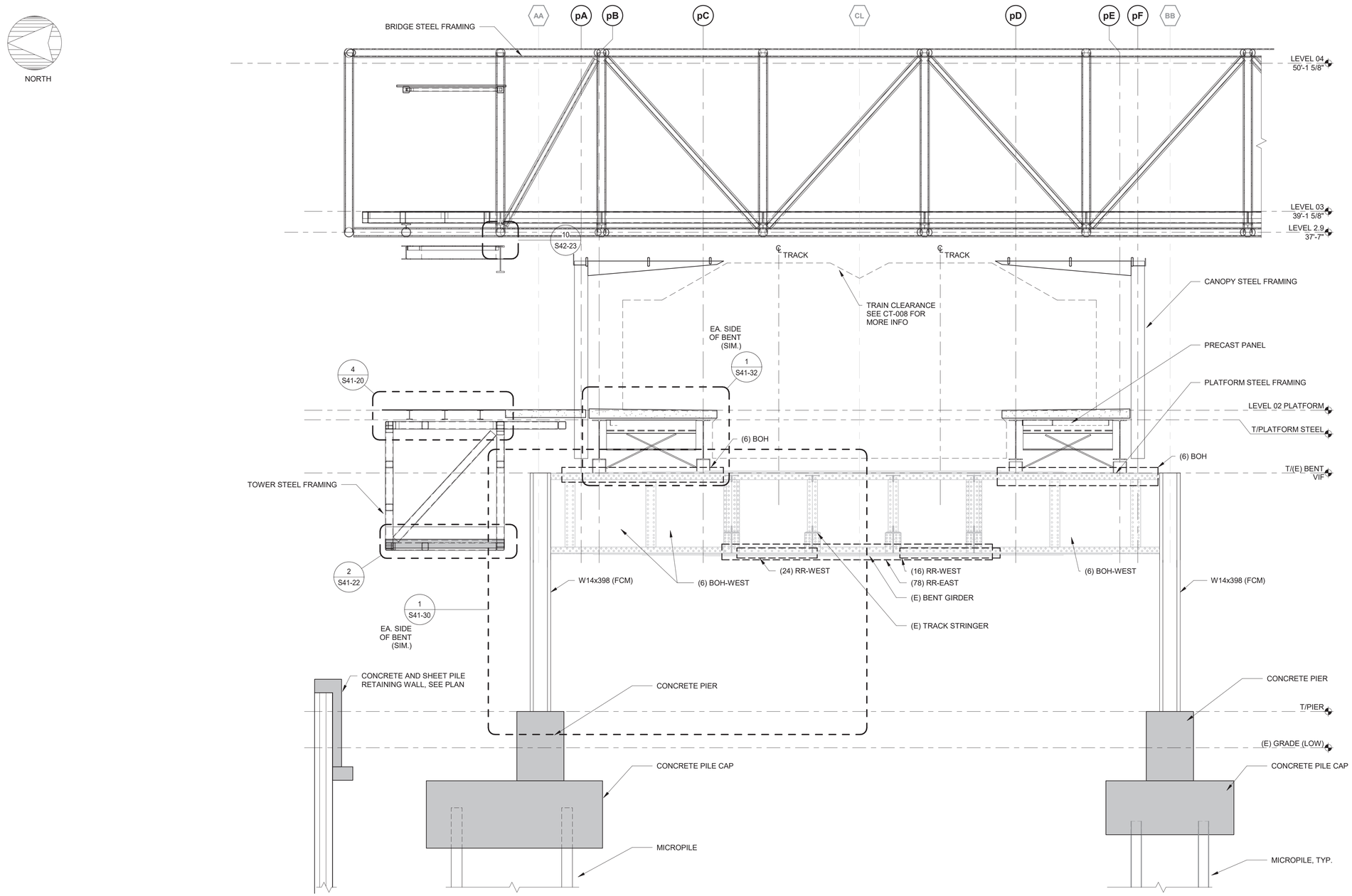

1 BENT 22 ELEVATION LOOKING EAST

1/4" = 1'-0"

REPAIR LEGEND:

(25) RR -East
- Side of Girder, as applicable (East or West)
- RR = Rivet Replacement
- No. of rivets to be replaced

(3) BOH -East
- Side of Girder, as applicable (East or West). Omitted for horiz. flange
- BOH = Bolt in Open Hole
- No. of open bolt or rivet holes

(3) KB -East
- Side of Girder, as applicable (East or West).
- KB = Replace missing or broken Keeper Bolt
- No. of missing or broken keeper bolts

DESIGN BY:									
DRAWN BY:									
CHECKED BY:									
APPROVED BY:			01/27/2020	ISSUE FOR BID	CJB	MW	TRM		
CDOT/APPROVED BY:		NO.	DATE	REVISIONS	DES.	DRW.	CHK.	DCCO	CDOT

SIMPSON GUMPERTZ & HEGER
Engineering of Structures and Building Enclosures
Simpson Gumpertz & Heger Inc.
135 South LaSalle Street, Suite 3800
Chicago, Illinois 60603
main: 312.754.7500 fax: 312.754.7501
www.sgh.com

PERKINS+WILL
The Wrigley Building
410 North Michigan Ave.
Suite 1600
Chicago, IL 60611
t 312.755.0770
f 312.755.0775
www.perkinswill.com

CDOT
CHICAGO DEPARTMENT OF TRANSPORTATION
DIVISION OF ENGINEERING

154 N DAMEN AVE - DAMEN GREEN LINE STATION

BENT 22 ELEVATION

CDOT PROJECT D-7-135

DATE: 01/27/2020

SPEC. NO.

DRAWING NO. **S21-38**

REVISION NO.

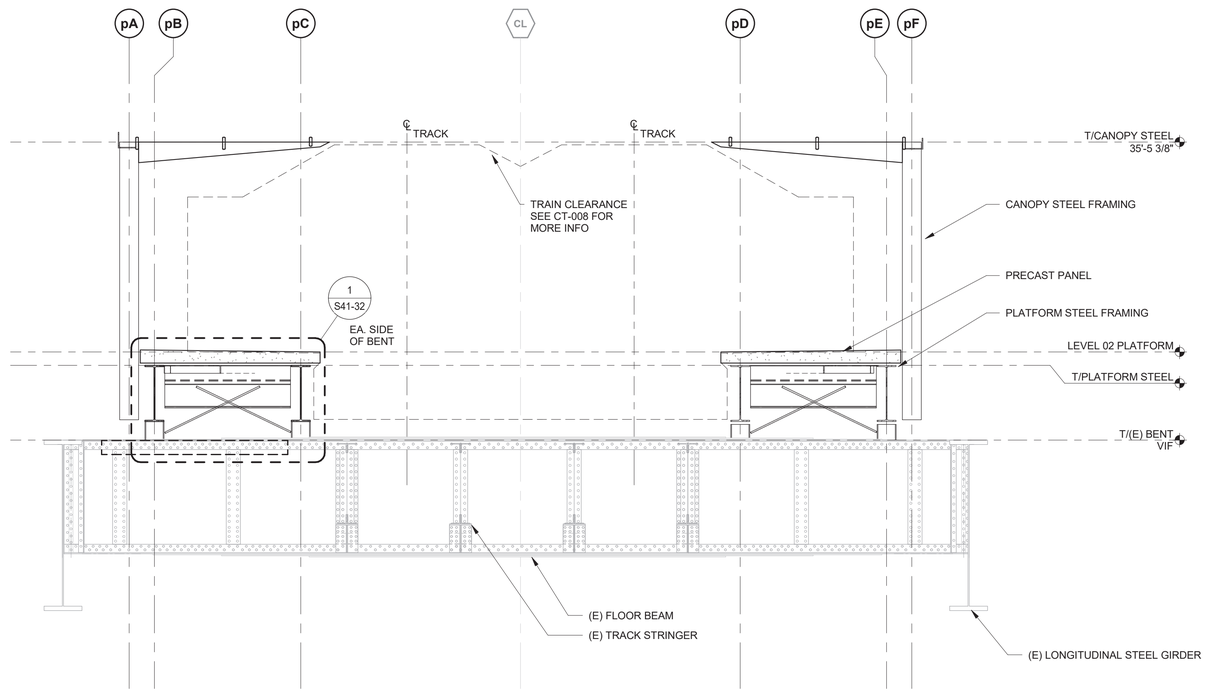

1 FLOOR BEAM 02 ELEVATION LOOKING EAST

1/4" = 1'-0"

REPAIR LEGEND:

(25) RR -East
- Side of Girder, as applicable (East or West)
- RR = Rivet Replacement
- No. of rivets to be replaced

(3) BOH -East
- Side of Girder, as applicable (East or West). Omitted for horiz. flange
- BOH = Bolt in Open Hole
- No. of open bolt or rivet holes

(3) KB -East
- Side of Girder, as applicable (East or West).
- KB = Replace missing or broken Keeper Bolt
- No. of missing or broken keeper bolts

DESIGN BY:									
DRAWN BY:									
CHECKED BY:									
APPROVED BY:			01/27/2020	ISSUE FOR BID	CJB	MW	TRM		
CDOT/APPROVED BY:		NO.	DATE	REVISIONS	DES.	DRW.	CHK.	DCCO	CDOT

SIMPSON GUMPERTZ & HEGER
Engineering of Structures and Building Enclosures
Simpson Gumpertz & Heger Inc.
135 South LaSalle Street, Suite 3800
Chicago, Illinois 60603
main: 312.754.7500 fax: 312.754.7501
www.sgh.com

PERKINS+WILL
The Wrigley Building
410 North Michigan Ave.
Suite 1600
Chicago, IL 60611
t 312.755.0770
f 312.755.0775
www.perkinswill.com

CDOT
CHICAGO DEPARTMENT OF TRANSPORTATION
DIVISION OF ENGINEERING

154 N DAMEN AVE - DAMEN GREEN LINE STATION

SPEC. NO.

FLOOR BEAM 02 ELEVATION

DRAWING NO.
S21-39

CDOT PROJECT D-7-135

DATE: 01/27/2020

REVISION NO.

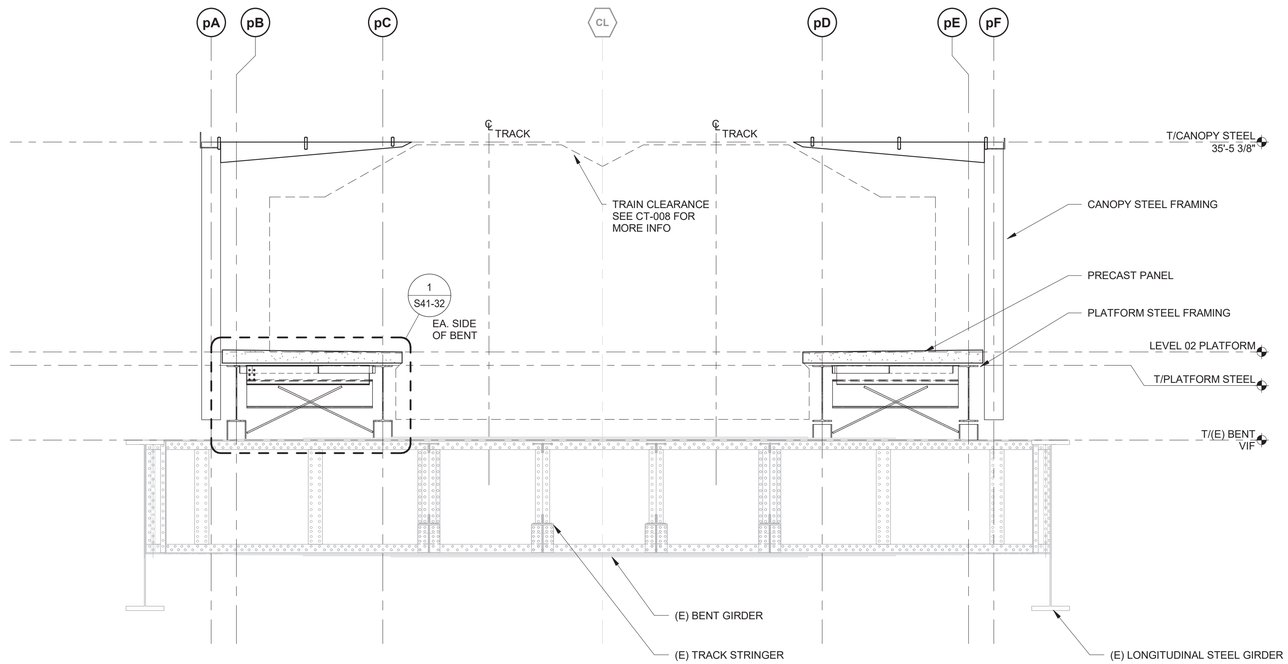

1 FLOOR BEAM 01 ELEVATION LOOKING EAST

1/4" = 1'-0"

REPAIR LEGEND:

(25) RR -East
- Side of Girder, as applicable (East or West)
- RR = Rivet Replacement
- No. of rivets to be replaced

(3) BOH -East
- Side of Girder, as applicable (East or West). Omitted for horiz. flange
- BOH = Bolt in Open Hole
- No. of open bolt or rivet holes

(3) KB -East
- Side of Girder, as applicable (East or West).
- KB = Replace missing or broken Keeper Bolt
- No. of missing or broken keeper bolts

DESIGN BY:									
DRAWN BY:									
CHECKED BY:									
APPROVED BY:			01/27/2020	ISSUE FOR BID	CJB	MW	TRM		
CDOT/APPROVED BY:		NO.	DATE	REVISIONS	DES.	DRW.	CHK.	DCCO	CDOT

SIMPSON GUMPERTZ & HEGER
Engineering of Structures and Building Enclosures
Simpson Gumpertz & Heger Inc.
135 South LaSalle Street, Suite 3800
Chicago, Illinois 60603
main: 312.754.7500 fax: 312.754.7501
www.sgh.com

PERKINS+WILL
The Wrigley Building
410 North Michigan Ave.
Suite 1600
Chicago, IL 60611
t 312.755.0770
f 312.755.0775
www.perkinswill.com

CDOT
CHICAGO DEPARTMENT OF TRANSPORTATION
DIVISION OF ENGINEERING

154 N DAMEN AVE - DAMEN GREEN LINE STATION

FLOOR BEAM 01 ELEVATION

CDOT PROJECT D-7-135

DATE: 01/27/2020

SPEC. NO.

DRAWING NO. **S21-40**

REVISION NO.

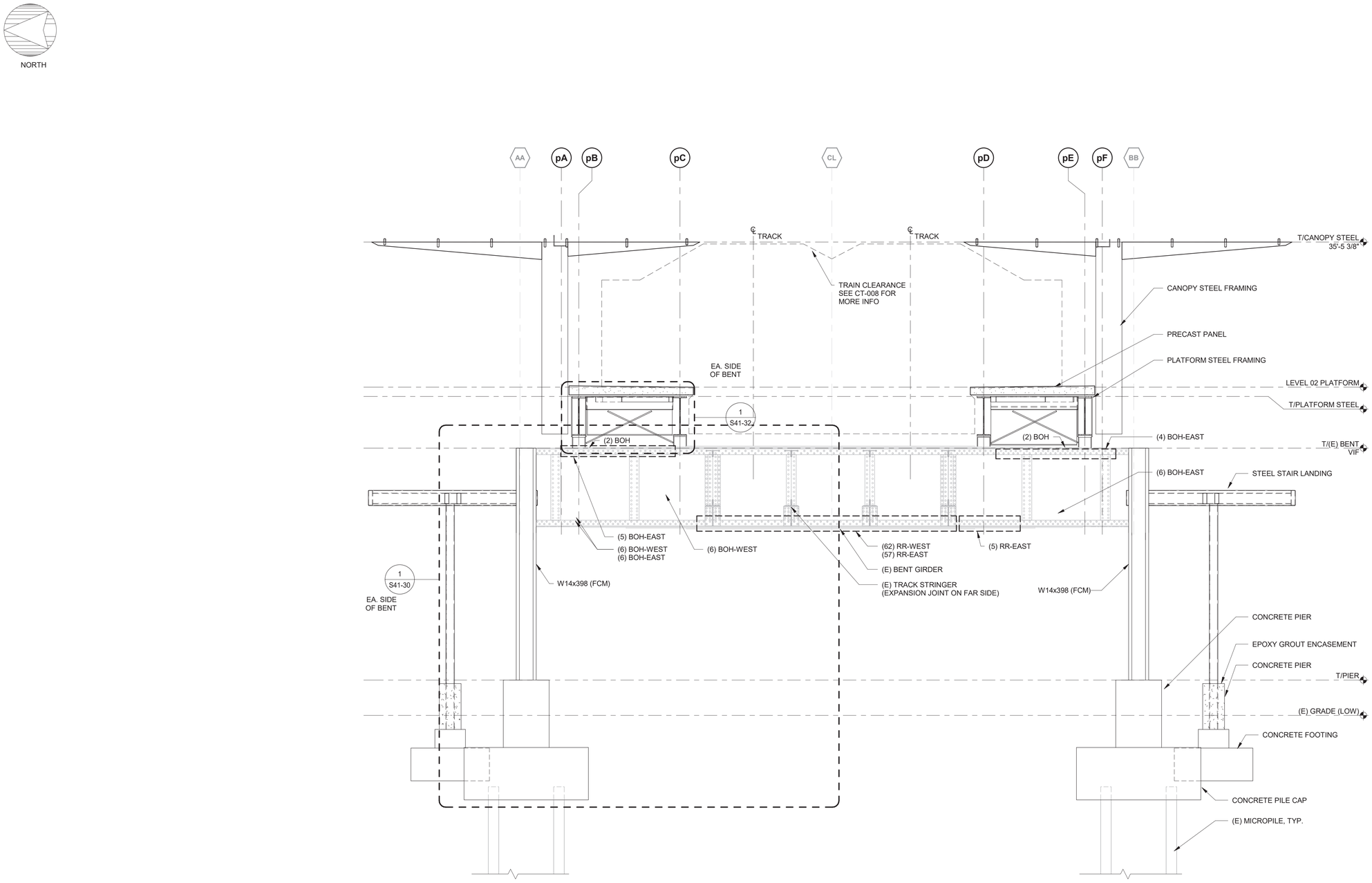

1 BENT 19 ELEVATION LOOKING EAST

1/4" = 1'-0"

REPAIR LEGEND:

(25) RR -East
- Side of Girder, as applicable (East or West)
- RR = Rivet Replacement
- No. of rivets to be replaced

(3) BOH -East
- Side of Girder, as applicable (East or West). Omitted for horiz. flange
- BOH = Bolt in Open Hole
- No. of open bolt or rivet holes

(3) KB -East
- Side of Girder, as applicable (East or West).
- KB = Replace missing or broken Keeper Bolt
- No. of missing or broken keeper bolts

DESIGN BY:									
DRAWN BY:									
CHECKED BY:									
APPROVED BY:			01/27/2020	ISSUE FOR BID	CJB	MW	TRM		
CDOT/APPROVED BY:		NO.	DATE	REVISIONS	DES.	DRW.	CHK.	DCCO	CDOT

SIMPSON GUMPERTZ & HEGER
Engineering of Structures and Building Enclosures
Simpson Gumpertz & Heger Inc.
135 South LaSalle Street, Suite 3800
Chicago, Illinois 60603
main: 312.754.7500 fax: 312.754.7501
www.sgh.com

PERKINS+WILL
The Wrigley Building
410 North Michigan Ave.
Suite 1600
Chicago, IL 60611
t 312.755.0770
f 312.755.0775
www.perkinswill.com

CDOT
CHICAGO DEPARTMENT OF TRANSPORTATION
DIVISION OF ENGINEERING

154 N DAMEN AVE - DAMEN GREEN LINE STATION

BENT 19 ELEVATION

CDOT PROJECT D-7-135 | DATE: 01/27/2020

SPEC. NO.

DRAWING NO. **S21-41**

REVISION NO.

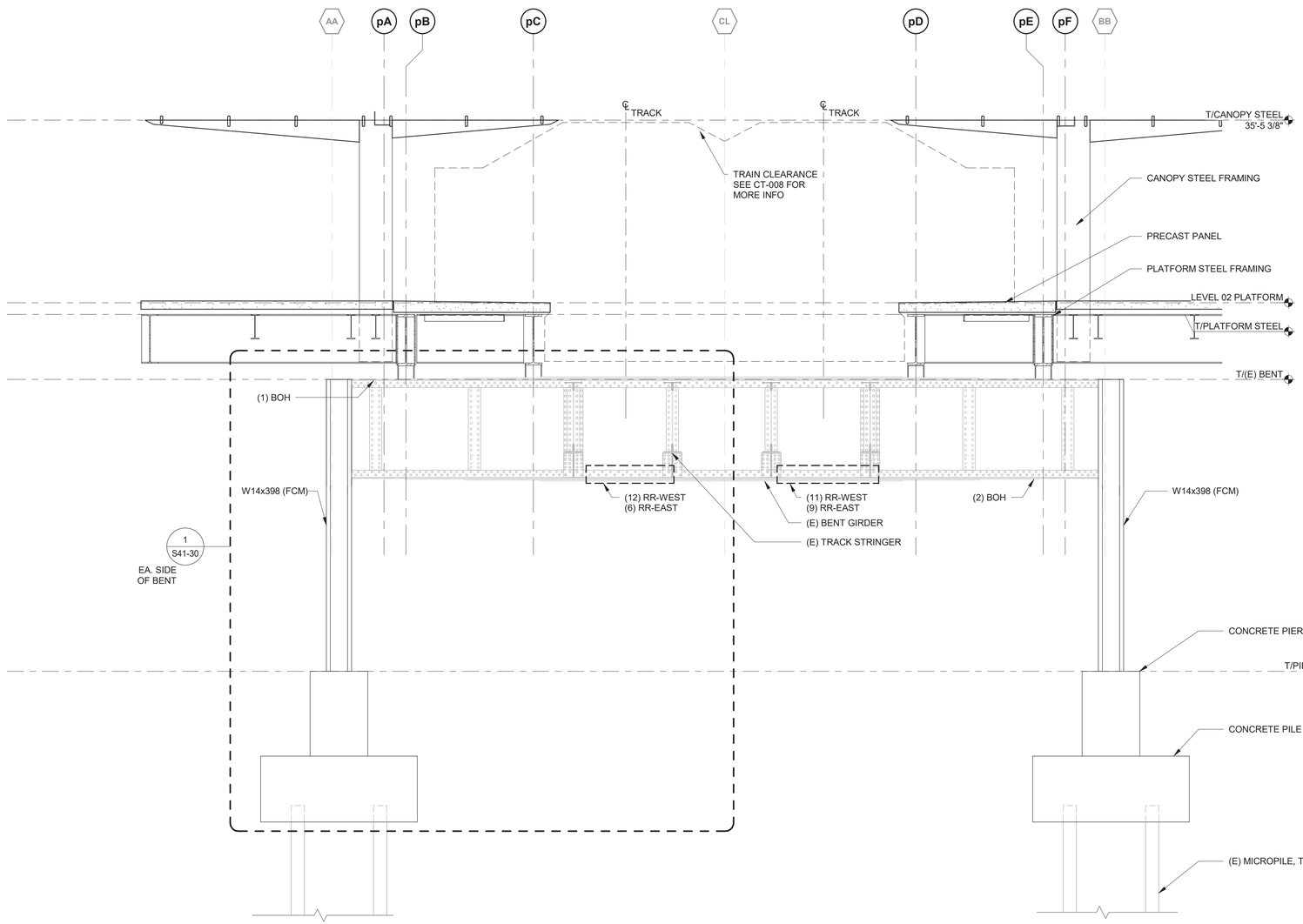

1 BENT 18 ELEVATION LOOKING EAST

1/4" = 1'-0"

REPAIR LEGEND:

(25) RR -East
- Side of Girder, as applicable (East or West)
- RR = Rivet Replacement
- No. of rivets to be replaced

(3) BOH -East
- Side of Girder, as applicable (East or West). Omitted for horiz. flange
- BOH = Bolt in Open Hole
- No. of open bolt or rivet holes

(3) KB -East
- Side of Girder, as applicable (East or West).
- KB = Replace missing or broken Keeper Bolt
- No. of missing or broken keeper bolts

DESIGN BY:									
DRAWN BY:									
CHECKED BY:									
APPROVED BY:			01/27/2020	ISSUE FOR BID	CJB	MW	TRM		
CDOT/APPROVED BY:		NO.	DATE	REVISIONS	DES.	DRW.	CHK.	DCCO	CDOT

SIMPSON GUMPERTZ & HEGER
Engineering of Structures and Building Enclosures
Simpson Gumpertz & Heger Inc.
135 South LaSalle Street, Suite 3800
Chicago, Illinois 60603
main: 312.754.7500 fax: 312.754.7501
www.sgh.com

PERKINS+WILL
The Wrigley Building
410 North Michigan Ave.
Suite 1600
Chicago, IL 60611
t 312.755.0770
f 312.755.0775
www.perkinswill.com

CDOT
CHICAGO DEPARTMENT OF TRANSPORTATION
DIVISION OF ENGINEERING

154 N DAMEN AVE - DAMEN GREEN LINE STATION

BENT 18 ELEVATION

CDOT PROJECT D-7-135 | DATE: 01/27/2020

SPEC. NO.

DRAWING NO. **S21-42**

REVISION NO.

BAR SIZE	TENSION DEVELOPMENT LENGTH				TENSION LAP/SPLICE LENGTH			
	TOP BARS		OTHER BARS		TOP BARS		OTHER BARS	
	4000 PSI	5000 PSI	4000 PSI	5000 PSI	4000 PSI	5000 PSI	4000 PSI	5000 PSI
#3	19	17	15	13	25	23	20	17
#4	25	23	19	17	33	30	25	23
#5	31	28	24	22	41	37	32	29
#6	37	34	29	26	49	45	38	34
#7	54	49	42	38	71	64	55	50
#8	62	56	48	43	81	73	63	56
#9	70	63	54	48	91	82	71	63
#10	79	71	61	54	103	93	80	71
#11	87	78	67	60	114	102	88	78

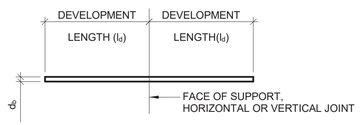

DEVELOPMENT

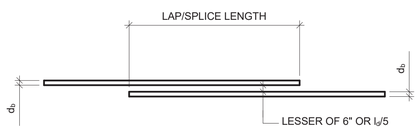

TENSION LAP/SPLICE

NOTES:
1. SEE "HOOKED REINFORCEMENT TENSION DEVELOPMENT LENGTH SCHEDULE" WHEN THE STRAIGHT DEVELOPMENT LENGTH IN TENSION CANNOT BE ACCOMMODATED IN THE CONCRETE SECTION.
2. ALWAYS USE TENSION DEVELOPMENT LENGTH AND TENSION LAP SPLICE LENGTH VALUES.
3. TABULATED DEVELOPMENT AND LAP SPLICE LENGTHS ARE BASED ON REINFORCING STEEL YIELD STRENGTH F_y=60 KSI, NORMAL WEIGHT CONCRETE, AND CLASS B LAPS.
4. TOP BARS ARE DEFINED AS HORIZONTAL BARS WITH MORE THAN 12 INCHES OF FRESH CONCRETE CAST IN THE MEMBER BELOW THE BARS TO BE DEVELOPED OR SPLICED. TOP BAR FACTOR DOES NOT APPLY TO VERTICAL BARS IN WALLS.
5. WHEN DIFFERENT BAR DIAMETERS ARE SPLICED, USE LARGER BAR LAP SPLICE LENGTH
6. ALL TABULATED VALUES ARE MINIMUM LENGTHS, IN CASE OF CONFLICT WITH PLANS, SECTIONS, OR DETAILS USE THE LONGER LENGTH.
7. d_b = BAR DIAMETER.
8. l_d = DEVELOPMENT, LAP OR SPLICE LENGTH.
9. ADJUST TABULATED LENGTHS BY THE FOLLOWING FACTORS WHERE APPLICABLE. NOTE THAT FACTORS ARE CUMULATIVE: (E.G. 1.30x1.50 = 1.95)
   A. LIGHT WEIGHT CONCRETE: 1.33
   B. 3 OR LESS BUNDLED BARS: 1.20
   C. 4 OR MORE BUNDLED BARS: 1.33
   D. CLEAR SPACING LESS THAN $2d_b$ AND CLEAR COVER LESS THAN d_b 1.50
   E. CLASS A LAP SPLICE 0.77
   F. EPOXY COATED BARS 1.50
10. WELDED AND/OR MECHANICAL SPLICES MAY BE USED AT IF APPROVED BY THE STRUCTURAL ENGINEER OF RECORD PROVIDED THAT THE SPLICE IS CAPABLE OF DEVELOPING AT LEAST 125% OF THE YIELD STRENGTH OF THE LARGER BAR IN TENSION. WHERE WELDED AND/OR MECHANICAL SPLICES ARE TO BE USED, THE GENERAL CONTRACTOR SHALL SUBMIT FULL DATA ON THE PROPOSED MATERIAL, PROCEDURES, AND INSTALLATION INSTRUCTIONS TO THE ENGINEER FOR REVIEW AS A SHOP DRAWING SUBMISSION.
11. USE MECHANICAL COUPLERS FOR #14 AND LARGER BARS.
12. LAP SPLICES IN CONCRETE MASONRY SHALL BE AS SPECIFIED IN "STRAIGHT REINFORCEMENT DEVELOPMENT LENGTH IN GROUTED MASONRY" DETAIL.
13. SPLICES OF HORIZONTAL REINFORCEMENT IN WALLS SHALL BE STAGGERED.
14. SPLICES IN WALLS CONTAINING TWO CURTAINS OF REINFORCEMENT SHALL NOT OCCUR IN THE SAME LOCATION.

1 STRAIGHT REINFORCEMENT DEVELOPMENT AND SPLICE LENGTH SCHEDULE FOR CONCRETE

3/4" = 1'-0"

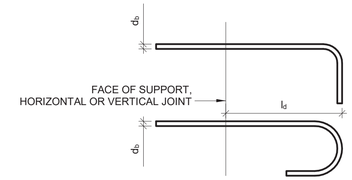

NOTES:
1. SEE TYPICAL TIE AND STIRRUP HOOKS DETAIL FOR ADDITIONAL INFORMATION.
2. TABULATED DEVELOPMENT LENGTHS ARE BASED ON REINFORCING STEEL YIELD STRENGTH F_y = 60 KSI AND NORMAL WEIGHT CONCRETE.
3. ALL TABULATED VALUES ARE MINIMUM LENGTHS. IN CASE OF CONFLICT WITH THE PLANS, SECTIONS, OR DETAILS, USE THE LONGER LENGTH.
4. d_b = BAR DIAMETER
5. l_d = DEVELOPMENT LENGTH
6. ADJUST TABULATED LENGTHS BY THE FOLLOWING FACTORS WHERE APPLICABLE. NOTE THAT THE FACTORS ARE CUMULATIVE:
   A. REINFORCING BAR STRENGTH OTHER THAN 60 KSI: (F_y/60,000)
   B. LIGHT WEIGHT CONCRETE: 1.33
   C. EPOXY COATED BARS: 1.2

BAR SIZE	TENSION DEVELOPMENT LENGTH (l_d) INCHES	
	4000 PSI	5000 PSI
#3	8	7
#4	10	9
#5	12	11
#6	15	13
#7	17	15
#8	19	17
#9	22	20
#10	24	22
#11	27	24

2 HOOKED REINFORCEMENT TENSION DEVELOPMENT LENGTH SCHEDULE IN CONCRETE

3/4" = 1'-0"

BAR SIZE	D (IN.)
#3	1 1/2
#4	2
#5	2 1/2

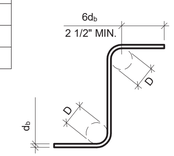

90 DEGREE HOOK

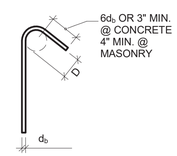

135 DEGREE HOOK

NOTES:
1. ALL BENDS SHALL BE MADE COLD.
2. d_b = BAR DIAMETER.

3 TYPICAL TIE AND STIRRUP HOOKS

3/4" = 1'-0"

BAR SIZE	D (IN.)
#3	2 1/4
#4	3
#5	3 3/4
#6	4 1/2
#7	5 1/4
#8	6
#9	9
#10	10 1/4
#11	11 1/4

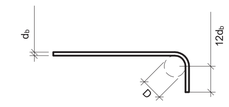

90 DEGREE HOOK

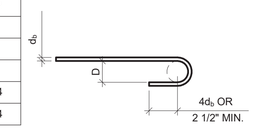

180 DEGREE HOOK

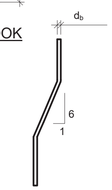

REBAR BEND

NOTES:
1. ALL BENDS SHALL BE MADE COLD.
2. d_b = BAR DIAMETER.

4 REINFORCEMENT BENDS

3/4" = 1'-0"

DESIGN BY:									
DRAWN BY:									
CHECKED BY:									
APPROVED BY:			01/27/2020	ISSUE FOR BID	EJT	MW	TRM		
CDOT/APPROVED BY:		NO.	DATE	REVISIONS	DES.	DRW.	CHK.	DCCO	CDOT

SIMPSON GUMPERTZ & HEGER
Engineering of Structures and Building Enclosures
Simpson Gumpertz & Heger Inc.
135 South LaSalle Street, Suite 3800
Chicago, Illinois 60603
main: 312.754.7500 fax: 312.754.7501
www.sgh.com

PERKINS+WILL
The Wrigley Building
410 North Michigan Ave.
Suite 1600
Chicago, IL 60611
t 312.755.0770
f 312.755.0775
www.perkinswill.com

CDOT
CHICAGO DEPARTMENT OF TRANSPORTATION
DIVISION OF ENGINEERING

154 N DAMEN AVE - DAMEN GREEN LINE STATION

TYPICAL CONCRETE REINFORCEMENT DETAILS

CDOT PROJECT D-7-135 | DATE: 01/27/2020

SPEC. NO.

DRAWING NO. **S30-00**

REVISION NO.

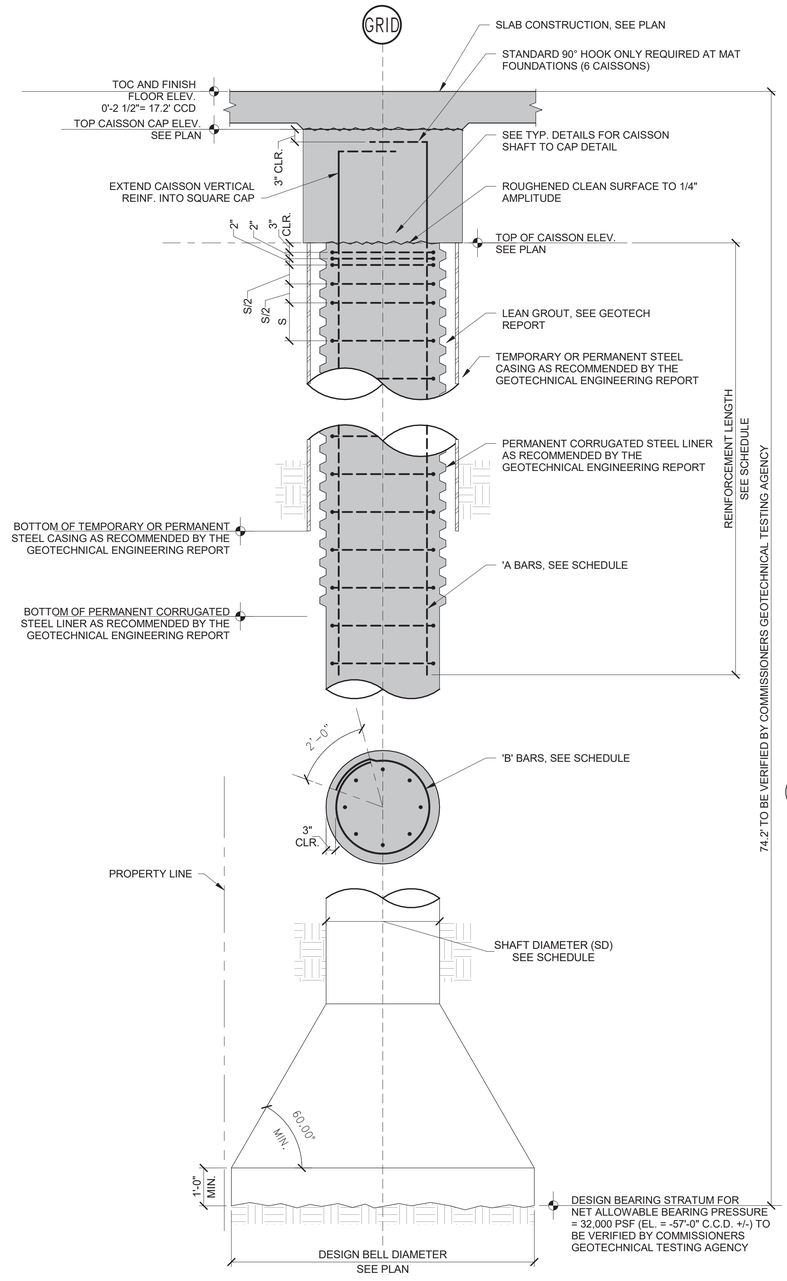

1 TYPICAL BELLED CAISSON DETAIL
1/2" = 1'-0"

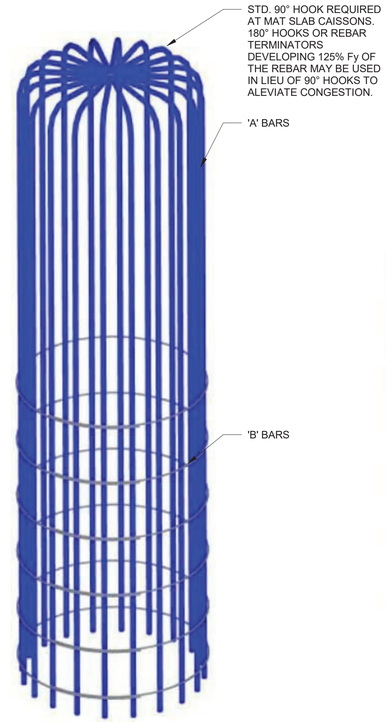

2 CAISSON REINFORCEMENT
NTS

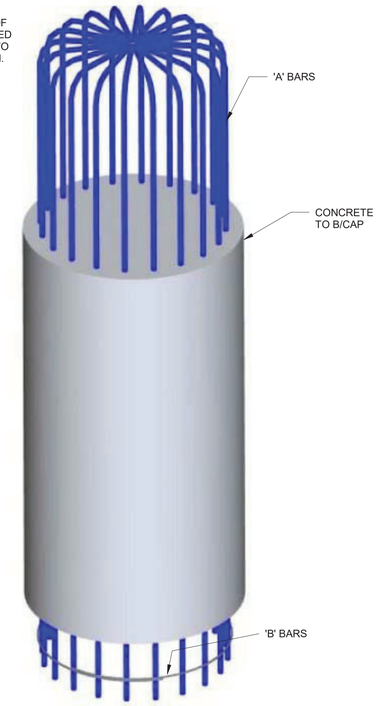

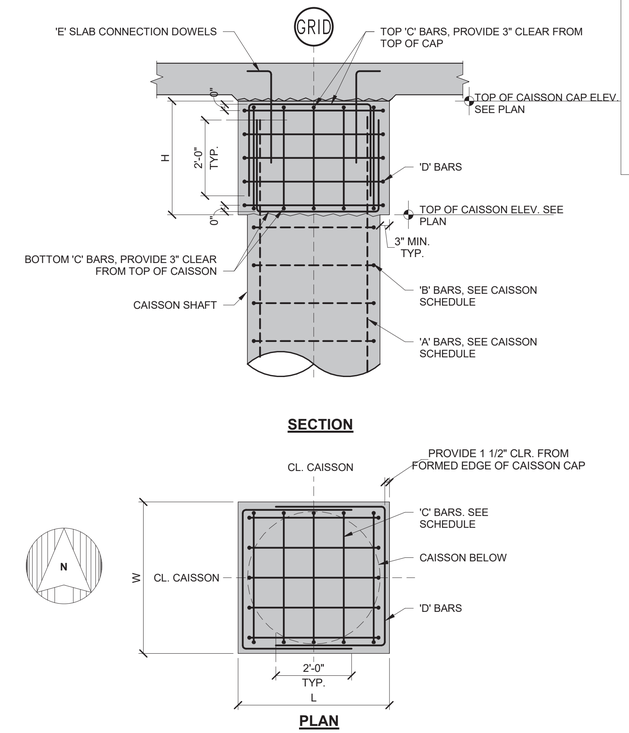

3 TYPICAL CAISSON CAP DETAIL
1/2" = 1'-0"

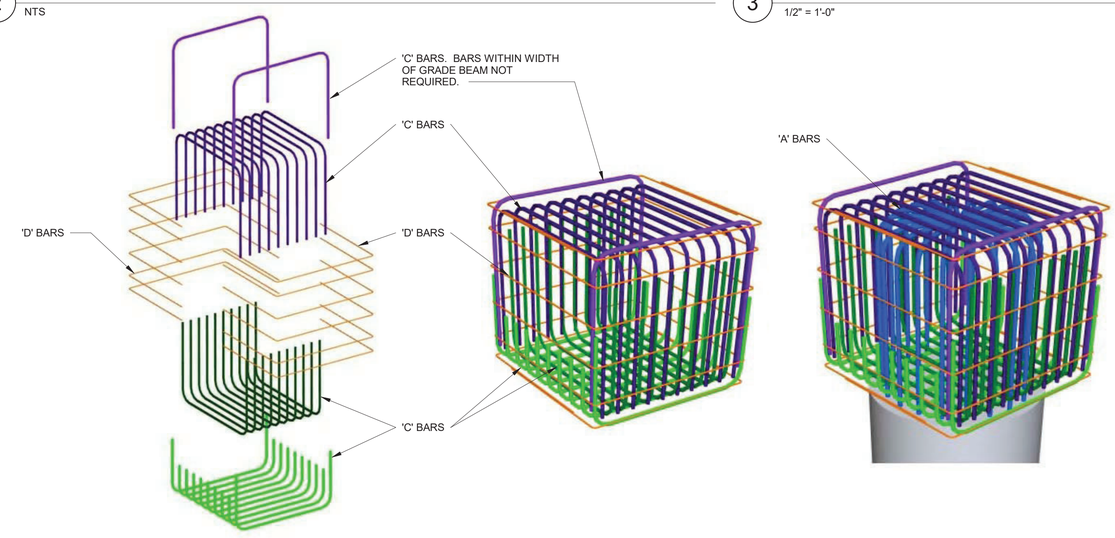

4 CAISSON CAP REINFORCEMENT
NTS

SHEET BEST VIEWED IN COLOR

DESIGN BY:									
DRAWN BY:									
CHECKED BY:									
APPROVED BY:			01/27/2020	ISSUE FOR BID	EJT	MW	TRM		
CDOT/APPROVED BY:		NO.	DATE	REVISIONS	DES.	DRW.	CHK.	DCCO	CDOT

SIMPSON GUMPERTZ & HEGER
Engineering of Structures and Building Enclosures
Simpson Gumpertz & Heger Inc.
135 South LaSalle Street, Suite 3800
Chicago, Illinois 60603
main: 312.754.7500 fax: 312.754.7501
www.sgh.com

PERKINS+WILL
The Wrigley Building
410 North Michigan Ave.
Suite 1600
Chicago, IL 60611
t 312.755.0770
f 312.755.0775
www.perkinswill.com

CDOT
CHICAGO DEPARTMENT OF TRANSPORTATION
DIVISION OF ENGINEERING

154 N DAMEN AVE - DAMEN GREEN LINE STATION

TYPICAL CAISSON AND GRADE BEAM DETAILS

CDOT PROJECT D-7-135 | DATE: 01/27/2020

SPEC. NO.

DRAWING NO. S30-01

REVISION NO.

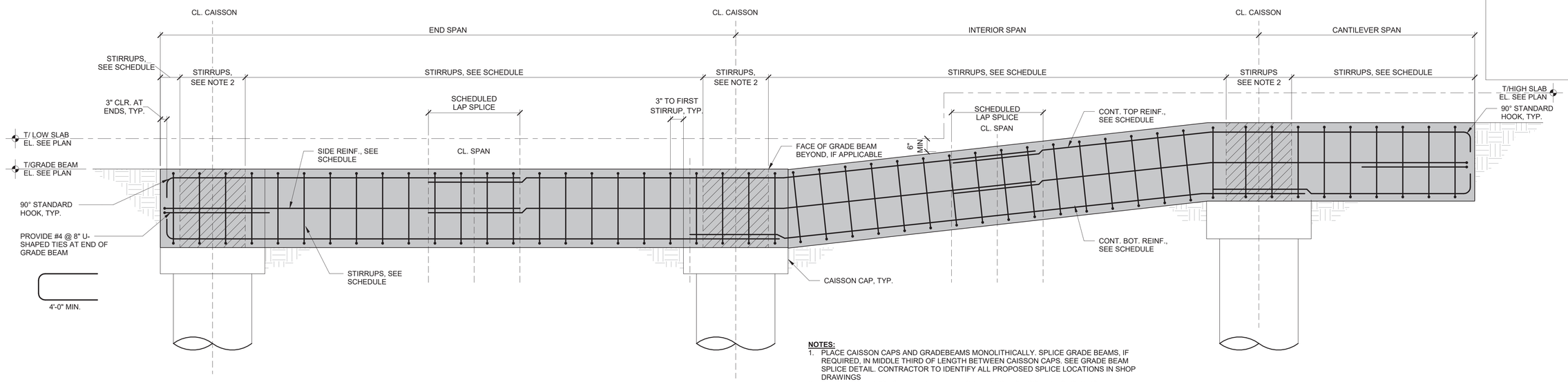

NOTES:
1. PLACE CAISSON CAPS AND GRADEBEAMS MONOLITHICALLY. SPLICE GRADE BEAMS, IF REQUIRED, IN MIDDLE THIRD OF LENGTH BETWEEN CAISSON CAPS. SEE GRADE BEAM SPLICE DETAIL. CONTRACTOR TO IDENTIFY ALL PROPOSED SPLICE LOCATIONS IN SHOP DRAWINGS
2. SPACE SIDE BARS EQUALLY BETWEEN TOP AND BOTTOM CONTINUOUS BARS.
3. AT INTERSECTING GRADE BEAM LOCATIONS PROVIDE #4 @ 9" CLOSED STIRRUPS. AT LOCATIONS WITHOUT INTERSECTING GRADE BEAMS, PROVIDE SCHEDULED STIRRUPS.
4. PILE CAP REINFORCEMENT NOT SHOWN FOR CLARITY.

1 TYPICAL GRADE BEAM ELEVATION
1/2" = 1'-0"

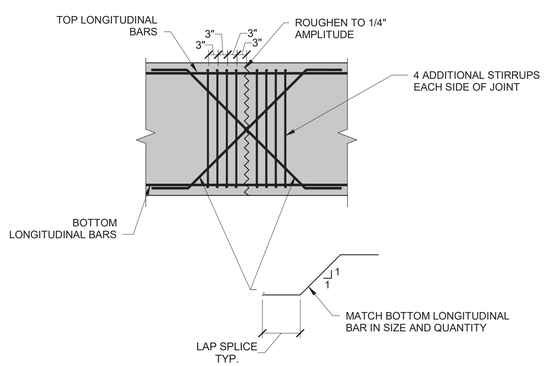

NOTES:
1. LOCATE JOINTS IN MIDDLE 1/3 OF SPANS.
2. IDENTIFY ALL PROPOSED JOINTS IN THE SHOP DRAWINGS.

2 TYPICAL GRADE BEAM CONSTRUCTION JOINT DETAIL
1/2" = 1'-0"

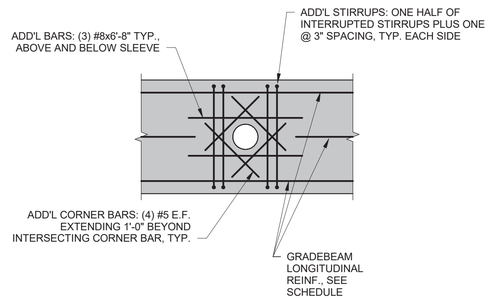

ELEVATION

NOTES:
1. LIMIT SLEEVE DIAMETER TO ONE THIRD OF GRADE BEAM DEPTH
2. PLACE SLEEVE ENTIRELY WITHIN MIDDLE THIRD OF GRADE BEAM DEPTH.
3. PLACE SLEEVE ENTIRELY WITHIN MIDDLE FIFTH OF GRADE BEAM CLEAR SPAN.
4. LOCATE SLEEVES BASED ON TRADE COORDINATION. SUBMIT SHOP DRAWINGS SHOWING ALL SLEEVE LOCATIONS. SEE GENERAL NOTES
5. TYPICAL STIRRUPS ARE NOT SHOWN FOR CLARITY.
6. DO NOT LOCATE SLEEVES IN ANY GRADEBEAM SPAN THAT SUPPORTS A COLUMN.

3 TYPICAL GRADE BEAM SLEEVE DETAIL
1/2" = 1'-0"

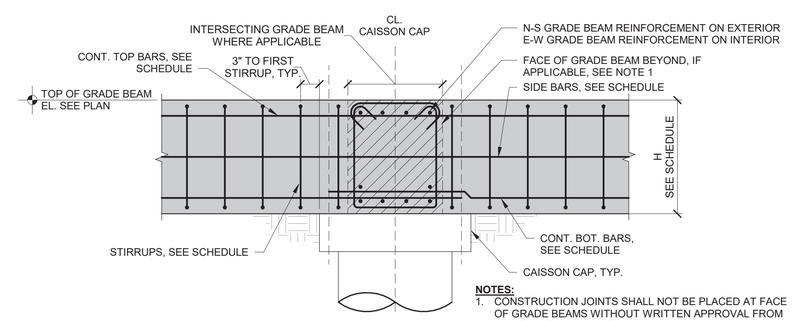

NOTES:
1. CONSTRUCTION JOINTS SHALL NOT BE PLACED AT FACE OF GRADE BEAMS WITHOUT WRITTEN APPROVAL FROM THE STRUCTURAL ENGINEER.
2. SLAB-ON-GRADE NOT SHOWN FOR CLARITY.

4 TYPICAL GRADE BEAM INTERSECTION DETAIL
1/2" = 1'-0"

SHEET BEST VIEWED IN COLOR

DESIGN BY:									
DRAWN BY:									
CHECKED BY:									
APPROVED BY:			01/27/2020	ISSUE FOR BID	EJT	MW	TRM		
CDOT/APPROVED BY:		NO.	DATE	REVISIONS	DES.	DRW.	CHK.	DCCO	CDOT

SIMPSON GUMPERTZ & HEGER
Engineering of Structures and Building Enclosures
Simpson Gumpertz & Heger Inc.
135 South LaSalle Street, Suite 3800
Chicago, Illinois 60603
main: 312.754.7500 fax: 312.754.7501
www.sgh.com

PERKINS+WILL
The Wrigley Building
410 North Michigan Ave.
Suite 1600
Chicago, IL 60611
t 312.755.0770
f 312.755.0775
www.perkinswill.com

CDOT
CHICAGO DEPARTMENT OF TRANSPORTATION
DIVISION OF ENGINEERING

154 N DAMEN AVE - DAMEN GREEN LINE STATION

TYPICAL CAISSON AND GRADE BEAM DETAILS

CDOT PROJECT D-7-135 | DATE: 01/27/2020

SPEC. NO.

DRAWING NO. **S30-02**

REVISION NO.

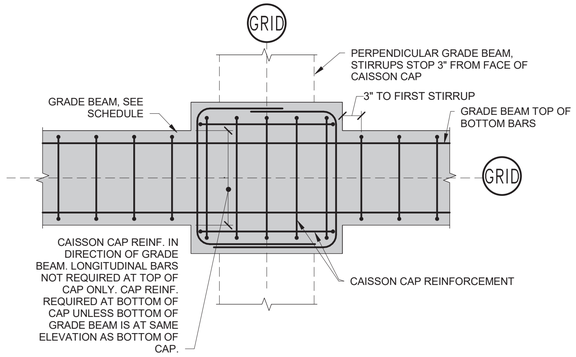

1A TYPICAL CAISSON CAP TO GRADE BEAM PLAN DETAIL
1/2" = 1'-0"

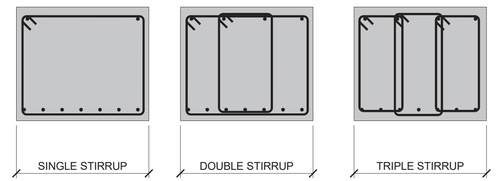

2 GRADE BEAM STIRRUP REINFORCEMENT
1/2" = 1'-0"

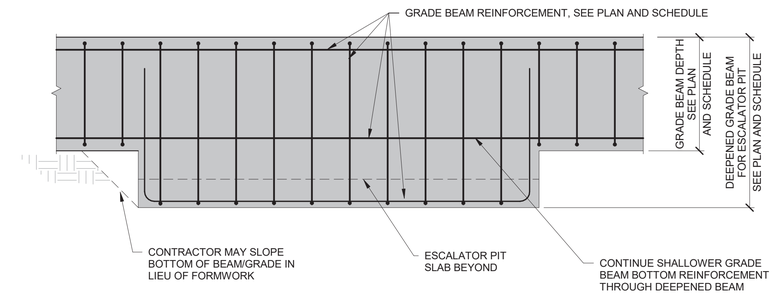

3 TYPICAL GRADE BEAM AT ESCALATOR PIT
1/2" = 1'-0"

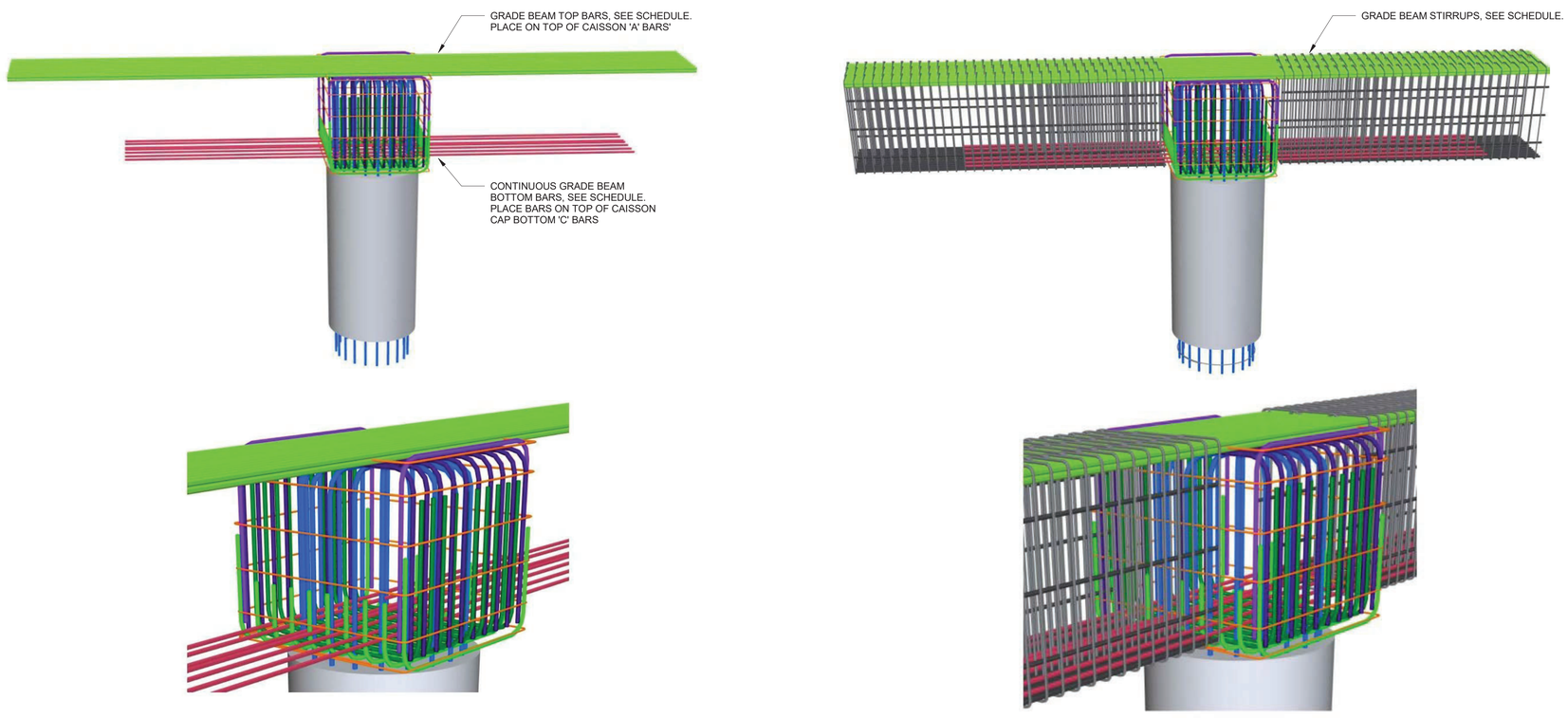

1B GRADE BEAM REINFORCEMENT
NTS

SHEET BEST VIEWED IN COLOR

DESIGN BY:									
DRAWN BY:									
CHECKED BY:									
APPROVED BY:			01/27/2020	ISSUE FOR BID	EJT	MW	TRM		
CDOT/APPROVED BY:		NO.	DATE	REVISIONS	DES.	DRW.	CHK.	DCCO	CDOT

SIMPSON GUMPERTZ & HEGER
Engineering of Structures and Building Enclosures
Simpson Gumpertz & Heger Inc.
135 South LaSalle Street, Suite 3800
Chicago, Illinois 60603
main: 312.754.7500 fax: 312.754.7501
www.sgh.com

PERKINS+WILL
The Wrigley Building
410 North Michigan Ave.
Suite 1600
Chicago, IL 60611
t 312.755.0770
f 312.755.0775
www.perkinswill.com

CDOT
CHICAGO DEPARTMENT OF TRANSPORTATION
DIVISION OF ENGINEERING

154 N DAMEN AVE - DAMEN GREEN LINE STATION

TYPICAL CAISSON AND GRADE BEAM DETAILS

CDOT PROJECT D-7-135 | DATE: 01/27/2020

SPEC. NO.

DRAWING NO. S30-03

REVISION NO.

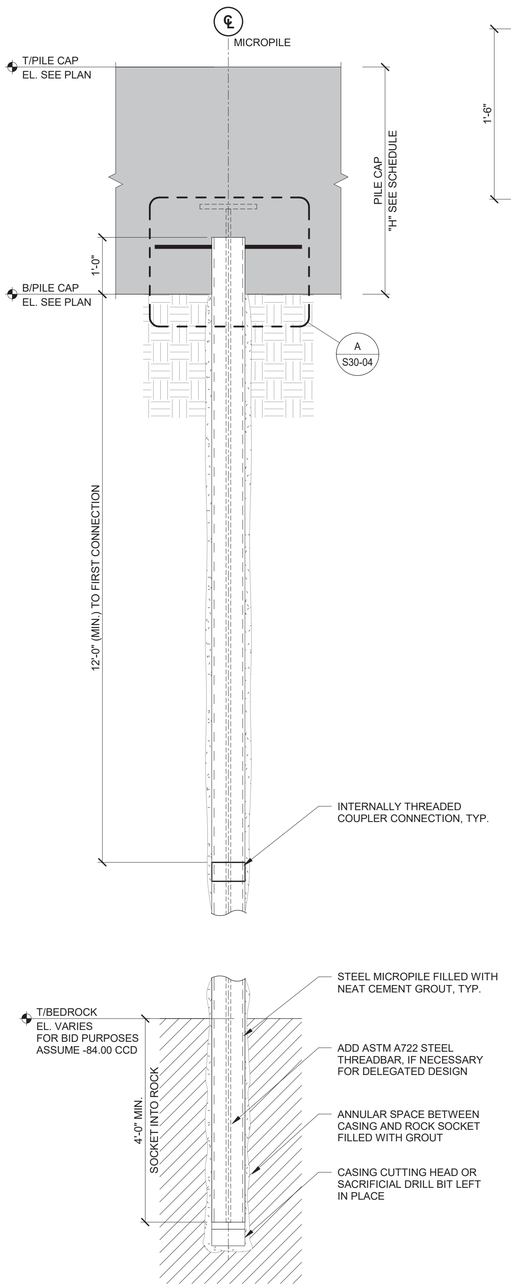

1 TYPICAL MICROPILE DETAIL

3/4" = 1'-0"

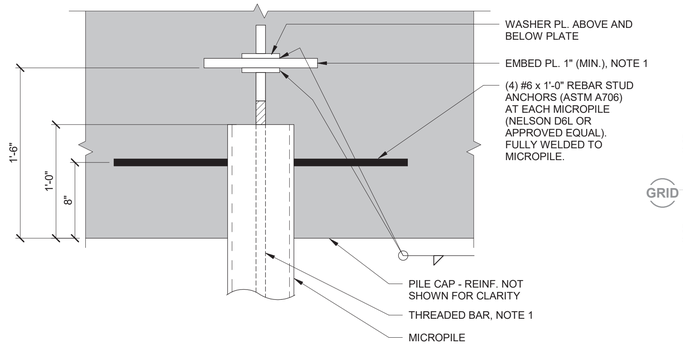

NOTES:
1. EMBED PLATE + THREADED BAR REQUIRED FOR TENSION PILES ONLY.

A TYPICAL PILE CAP EMBEDMENT DETAIL

1 1/2" = 1'-0"

PILE DELEGATED DESIGN NOTES

1. GENERAL
   A. Project involves new rock-socketed micropiles to support loads associated with the new elevated train station.
   B. Micropiles and temporary earth retention system to install micropiles, if necessary, are a delegated design to the General Contractor.
   C. See Geotechnical Report referenced in General Notes and Building Codes noted below for additional information.
   D. See Advanced Underground Package for Damen Green Line Station, CDOT Project D-7-135A for additional information on existing micropiles and load tests.
   E. See Specification 31 63 33 Steel Pipe Micropiles for additional information.

2. BUILDING CODES
   A. Chapter 13-132 "Foundations" of the 2018 Chicago Building Code.
   B. The City of Chicago Department of Buildings Code Memorandum titled Pile Deep Foundations, dated 15 June 2017.
   C. AASHTO Standard Specification 17th Edition, 2005 used to determine geotechnical capacity, settlement, and displacement.
   D. Supporting Bridge Structures: IDOT Bridge Manual.

3. MATERIALS
   A. Steel Piles: ASTM A106 N80 Pipe, Fy = 80 ksi
   B. Grout: f'c = 5,000 psi
   C. Reinforcement: ASTM A615 threadbar Gr. 75, min. (as necessary for design or load test).

4. DESIGN
   A. Design each micropile service-level (unfactored) loads shown in Load Table this sheet.
   B. Designs shown are based on the Geotechnical Report recommendations of a 9.625" diameter pile.
   C. Provide suitable protective coating or in the absence of coating, deduct 1/16 in. of the thickness of the micropile wall thickness in computing the allowable load.
   D. Limit total long-term settlement in piles (including elastic shortening) to 0.75 in. under maximum allowable compression load.
   E. Limit total lateral displacement to 0.50 in. under maximum shear load.
   F. Do not include passive earth pressure resistance on the micropile cap when designing for shear. All shear loads must be transferred through the micropiles.
   G. Maximum uplift displacement including elastic elongation shall not exceed:
      a. 1/4 in. for building structures
      b. 1/8 in. for track structures
   H. Ultimate strength of splices in the pile casing must be capable of withstanding the actual un-factored flexural stress times 2.0, except if the flexural stress is from vehicle collision forces the factor will be 1.0.
   I. Design the threaded joint per Specification 31 63 33 Drilled Micropiles, Part 1.
   J. Design the micropiles with a 5'-0" unsupported length for future excavation below micropile cap. This need not be considered for the extreme load case with vehicle collision (See S00-03 for vehicluar collision).

5. LOAD TESTS
   a. Utilize results of load testing performed for Advanced Underground Package, CDOT Project D-7-125A.
   b. Provide a unit pricing for additional load tests as requested by the City of Chicago Department of Buildings.
   c. For reaction piles for the load testing purposes, the factor of safety of 1.75 may be used, unless otherwise directed by the SEOR or Geotechnical Engineer.

6. INSTALLATION
   For the purposes of bidding, below is a possible micropile installation sequence. Final installation sequence is the responsibility of the contractor.
   A. Install micropile to a minimum of 4 ft into the bedrock and deeper as necessary to develop the required service loads.
   B. Pile plan location tolerance: +/- 3 inches at each pile.
   C. Pile plumb tolerance: 2 degrees
   D. Piles installed out of tolerance will require additional concrete, steel reinforcement, and/or relocated utilities at the Contractor's expense.
   E. Micropiles within 25 ft of neighboring structures and existing utilities shall be pre-augured down to a minimum depth of 20 ft or the lowest level of the adjacent structure, whichever is deeper.

7. DEFERRED SUBMITTALS
   A. Micropile design drawings and calculations signed and sealed by a licensed structural engineer in the State of Illinois. [Specification 31 63 33]
   B. Micropile installation process plan. [Specification 31 63 33]
   C. Temporary earth retention system design drawings and calculations signed and sealed by a licensed structural engineer in the State of Illinois.
   D. Monitoring Existing Conditions and Construction Activity During Construction [Specification 02 16 10]
   E. As-built pile plan locations dimensioned from the project gridlines. [Specification 31 63 33]
   F. Testing results of the corrosive soil environment for determining susceptibility of pile to corrosion per the Chicago Building Code. [Specification 31 63 33]

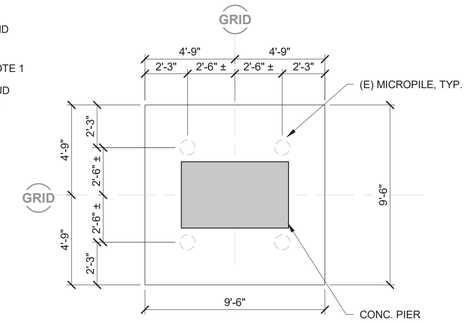

PC-4
EXISTING 4-PILE GROUP

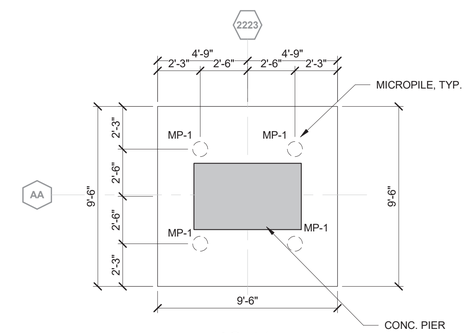

PC-4A
4-PILE GROUP

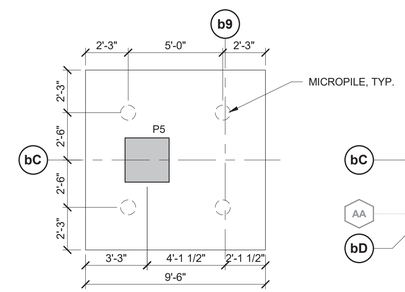

PC-4B
4-PILE GROUP

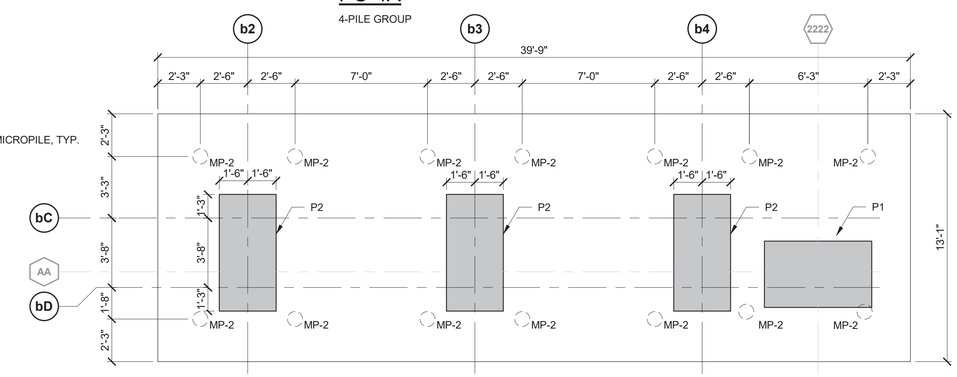

PC-14
14-PILE GROUP

2 MICROPILE LAYOUT PLANS

1/4" = 1'-0"

MICROPILE LOAD SCHEDULE

MARK	COMPRESSION	TENSION	SHEAR
MP-1	295K	0K	13K
MP-2	295K	45K	13K

PILE CAP SHEDULE (f'c = 6,000 psi)

MARK	LONG DIM.	SHORT DIM.	DEPTH, H	BOT. LONG BARS	BOT. SHORT BARS	TOP LONG BARS	TOP SHORT BARS
PC4	9'-6"	9'-6"	4'-0"	(26) #10	(26) #10	(13) #10	(13) #10
PC4A	9'-6"	9'-6"	4'-0"	(26) #10	(26) #10	(13) #10	(13) #10
PC4B	9'-6"	9'-6"	5'-0"	(24) #10	(24) #10	(12) #10	(12) #10
PC14	39'-9"	13'-1"	5'-0"	(72) #11	(22) #11	(48) #11	(11) #11

NOTES:
1. PROVIDE EPOXY-COATED REINFORCEMENT IN PILE CAPS AND PIERS.

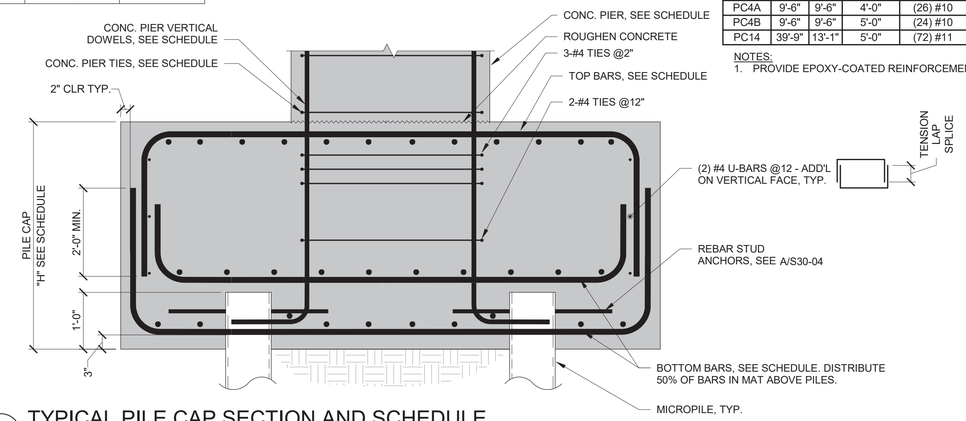

3 TYPICAL PILE CAP SECTION AND SCHEDULE

3/4" = 1'-0"

DESIGN BY:									
DRAWN BY:									
CHECKED BY:									
APPROVED BY:			01/27/2020	ISSUE FOR BID	CJB	MW	TRM		
CDOT/APPROVED BY:		NO.	DATE	REVISIONS	DES.	DRW.	CHK.	DCCO	CDOT

SIMPSON GUMPERTZ & HEGER
Engineering of Structures and Building Enclosures
Simpson Gumpertz & Heger Inc.
135 South LaSalle Street, Suite 3800
Chicago, Illinois 60603
main: 312.754.7500 fax: 312.754.7501
www.sgh.com

PERKINS+WILL
The Wrigley Building
410 North Michigan Ave.
Suite 1600
Chicago, IL 60611
t 312.755.0770
f 312.755.0775
www.perkinswill.com

CDOT
CHICAGO DEPARTMENT OF TRANSPORTATION
DIVISION OF ENGINEERING

154 N DAMEN AVE - DAMEN GREEN LINE STATION

TYPICAL MICROPILE AND PILE CAP DETAILS

CDOT PROJECT D-7-135 | DATE: 01/27/2020

SPEC. NO.

DRAWING NO. **S30-04**

REVISION NO.

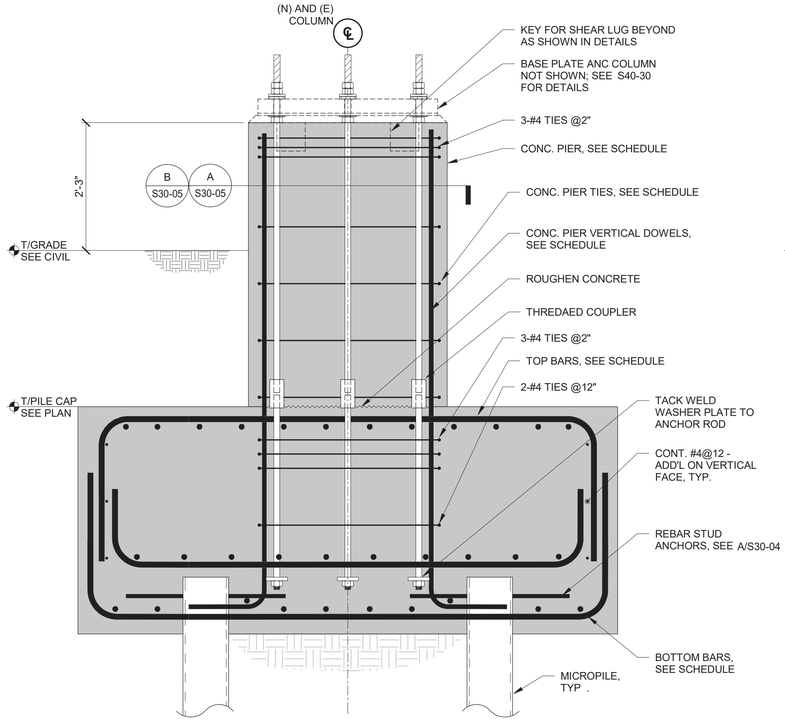

1 TYPICAL BENT GIRDER PILE CAP AND PIER SECTION
3/4" = 1'-0"

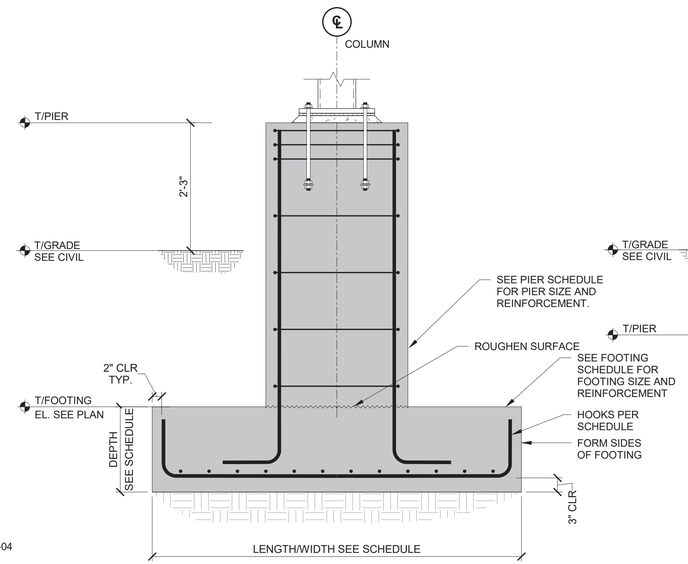

PIER ABOVE GRADE

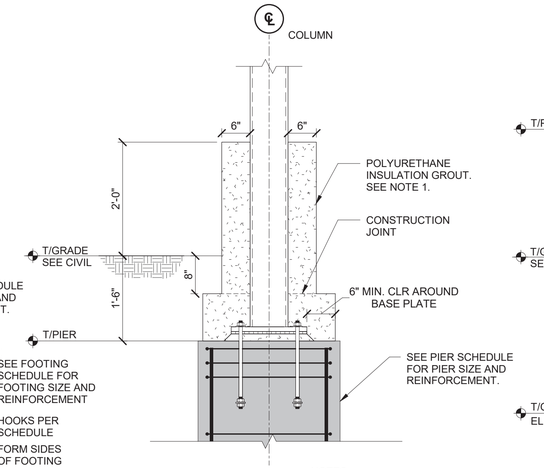

NOTES:
1. PROVIDE SIKA-Icosite KC 300 GROUT OR APPROVED EQUAL. SEE GENERAL NOTES FOR ADDITIONAL INFORMATION ON ELECTRICAL ISOLATION.

PIER BELOW GRADE

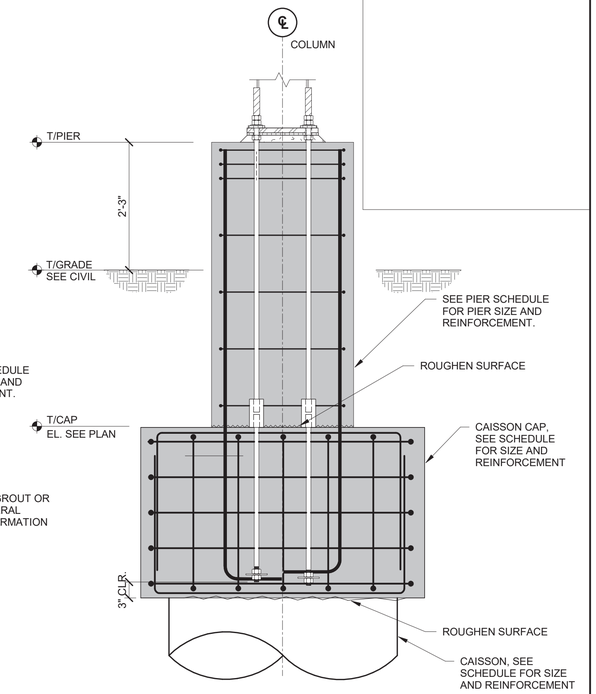

PIER ABOVE GRADE

NOTES:
1. SEE DETAIL 1/S30-05 FOR ADDITIONAL INFORMATION

SPREAD FOOTING SHEDULE (f'c = 5,000 psi)

MARK	WIDTH	LENGTH	DEPTH	BOT. LONG BARS	BOT. SHORT BARS	COMMENTS
F6	6'-0"	6'-0"	2'-6"	(12) #6	(12) #6	
F68	6'-0"	8'-0"	2'-6"	(12) #6	(12) #6	

NOTES:
1. PROVIDE EPOXY-COATED REINFORCEMENT IN SPREAD FOOTINGS.

2 TYPICAL SPREAD FOOTING WITH PIER DETAIL
3/4" = 1'-0"

3 TYPICAL CAISSON WITH PIER DETAIL
3/4" = 1'-0"

PIER SCHEDULE (f'c = 6,000 psi)

MARK	PIER TYPE	a	b	VERT. BARS	TIES	COMMENTS
P1	A	5'-8"	3'-6"	(30) #9	#4@12	
P2	B	3'-0"	6'-2"	(34) #9	#4@12	
P3	C	2'-4"	2'-4"	(8) #9	#4@12	
P4	D	3'-0"	1'-8"	(16) #8	#4@12	
P5	C	2'-4"	2'-4"	(16) #10	#4@12	

NOTES:
1. COORDINATE PIER REINFORCEMENT LAYOUT WITH ANCHOR ROD LAYOUT.
2. PROVIDE EXPOXY-COATED REINFORCEMENT IN PIERS.

4 PIER SCHEDULE AND DETAILS
3/4" = 1'-0"

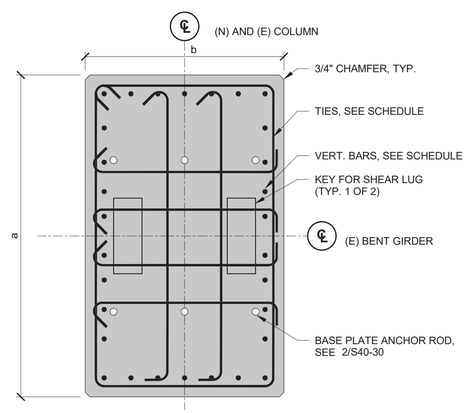

A PIER PLAN
3/4" = 1'-0"

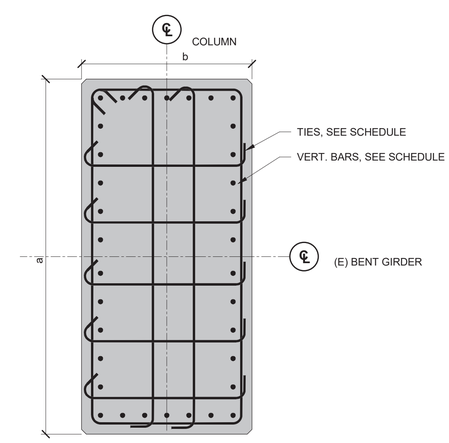

B PIER PLAN
3/4" = 1'-0"

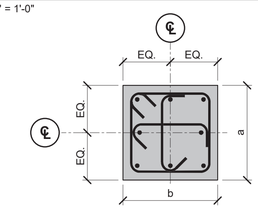

C PIER PLAN

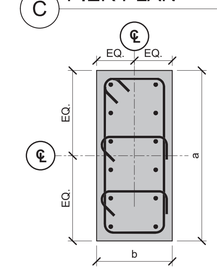

D PIER PLAN
3/4" = 1'-0"

DESIGN BY:									
DRAWN BY:									
CHECKED BY:									
APPROVED BY:			01/27/2020	ISSUE FOR BID	CJB	MW	TRM		
CDOT/APPROVED BY:		NO.	DATE	REVISIONS	DES.	DRW.	CHK.	DCCO	CDOT

SIMPSON GUMPERTZ & HEGER
Engineering of Structures and Building Enclosures
Simpson Gumpertz & Heger Inc.
135 South LaSalle Street, Suite 3800
Chicago, Illinois 60603
main: 312.754.7500 fax: 312.754.7501
www.sgh.com

PERKINS+WILL
The Wrigley Building
410 North Michigan Ave.
Suite 1600
Chicago, IL 60611
t 312.755.0770
f 312.755.0775
www.perkinswill.com

CDOT
CHICAGO DEPARTMENT OF TRANSPORTATION
DIVISION OF ENGINEERING

154 N DAMEN AVE - DAMEN GREEN LINE STATION

TYPICAL CONCRETE PIER AND FOOTING DETAILS

CDOT PROJECT D-7-135 | DATE: 01/27/2020

SPEC. NO.

DRAWING NO. **S30-05**

REVISION NO.

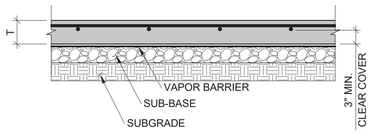

NOTES:
1. SEE PLANS FOR SLAB CONSTRUCTION.
2. SEE PLANS, GENERAL NOTES AND/OR SPECIFICATIONS FOR VAPOR BARRIER WHERE SLAB ON GRADE IS ABOVE MAT FOUNDATION, OMIT VAPOR BARRIER.
3. SEE PLANS, GENERAL NOTES AND/OR SPECIFICATIONS FOR SUB-BASE AND/OR SUBGRADE REQUIREMENTS.
4. SEE GENERAL NOTES FOR ADDITIONAL REINFORCING BAR CONCRETE COVER REQUIREMENTS.

1 SLAB-ON-GRADE DETAIL
3/4" = 1'-0"

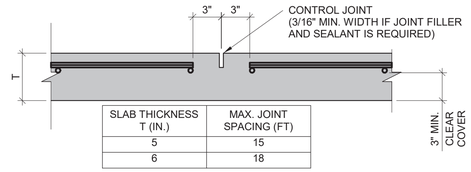

SLAB THICKNESS T (IN.)	MAX. JOINT SPACING (FT)
5	15
6	18

NOTES:
1. SAW CUT 1" (MIN.) DEEP JOINT WITH EARLY ENTRY SAW AS SOON AS POSSIBLE AFTER FINISHING SLAB. (4 TO 8 HOURS MAX.)
2. DETAIL REINFORCEMENT TO STOP AT JOINTS AS INDICATED.
3. LOCATE CONTROL JOINTS ON A RECTANGULAR GRID AND SUBMIT LAYOUT OF CONTROL JOINTS FOR APPROVAL UNLESS JOINT LOCATIONS ARE OTHERWISE SPECIFIED. RE-ENTRANT CORNERS ARE DISCOURAGED. WHERE UNAVOIDABLE, PROVIDE CORNER BARS PER DETAIL 7/S0-2.2.
4. ASPECT RATIO OF RECTANGLES SHALL NOT EXCEED 1.25.
5. SEE PLANS, GENERAL NOTES AND/OR SPECIFICATIONS FOR JOINT FILLER AND SEALANT REQUIREMENTS.
6. REINFORCEMENT SHOWN GRAPHICALLY. REFER ELSEWHERE FOR SIZE AND SPACING.
7. SEE GENERAL NOTES FOR ADDITIONAL REINFORCING BAR CLEAR COVER REQUIREMENTS.

2 CONTROL JOINT IN SLAB-ON-GRADE
1 1/2" = 1'-0"

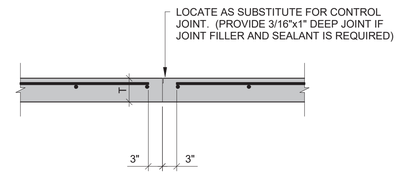

NOTES:
1. DETAIL REINFORCEMENT TO STOP AT JOINT.
2. SUBMIT LOCATIONS OF CONSTRUCTION JOINTS FOR APPROVAL.
3. ALLOW A MINIMUM OF 72 HOURS BETWEEN ADJACENT POURS.
4. SEE SPECIFICATIONS FOR JOINT FILLER AND SEALANT REQUIREMENTS.

3 SLAB-ON-GRADE CONSTRUCTION JOINT
3/4" = 1'-0"

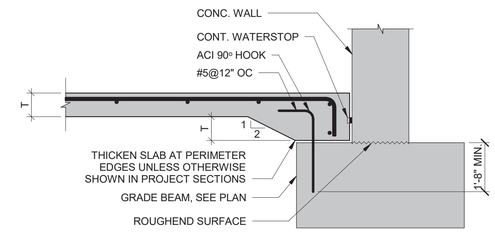

4 THICKENED SLAB-ON-GRADE AT PERIMETER
3/4" = 1'-0"

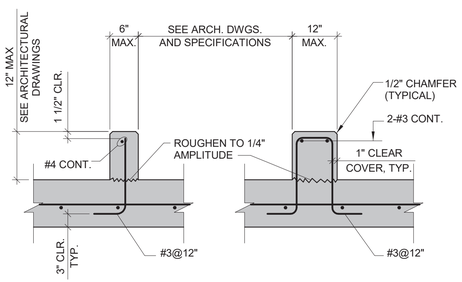

NOTE:
ADHESIVE DOWELS ARE AN ACCEPTABLE ALTERNATIVE. MATCH REINFORCING BAR SIZE AND SPACING SHOWN. PROVIDE A MINIMUM EMBEDMENT OF 2 1/2".

SIMILAR AT ELEVATED CONCRETE SLAB

5 CONCRETE CURB
3/4" = 1'-0"

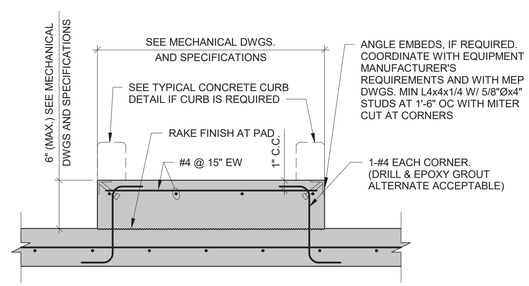

NOTE:
1. ADHESIVE GROUTED DOWELS ACCEPTABLE. MATCH REBAR SIZE AND LOCATIONS SHOWN AND EMBED A MINIMUM OF 2 1/2".

6 EQUIPMENT PAD ON SLAB ON GRADE
3/4" = 1'-0"

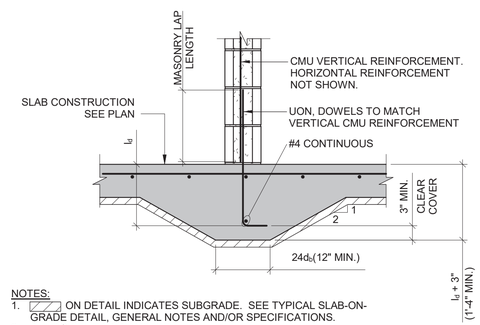

NOTES:
1. ON DETAIL INDICATES SUBGRADE. SEE TYPICAL SLAB-ON-GRADE DETAIL, GENERAL NOTES AND/OR SPECIFICATIONS.
2. d_b = DOWEL BAR DIAMETER.
3. l_d = TENSION DEVELOPMENT LENGTH IN CONCRETE.
4. REINFORCEMENT SHOWN GRAPHICALLY. REFER ELSEWHERE FOR SIZE AND SPACING.

7 THICKENED SLAB-ON-GRADE AT CMU WALLS
3/4" = 1'-0"

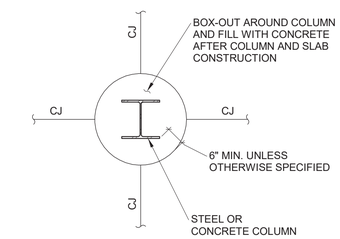

ROUND (SONOTUBE) PATTERN

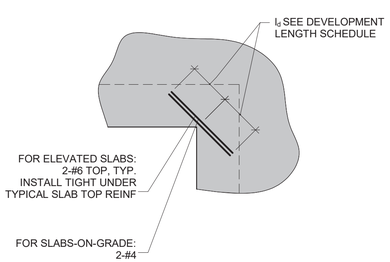

NOTE:
DETAIL APPLIES AT OPENINGS AND CORNERS OF SLAB DEPRESSIONS.

8 REINFORCEMENT AT RE-ENTRANT CORNER
3/4" = 1'-0"

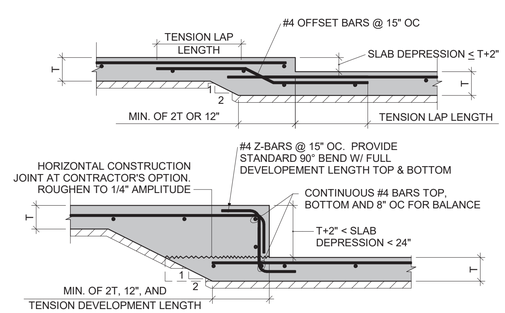

NOTES:
1. ON DETAIL INDICATES SUBGRADE. SEE TYPICAL SLAB-ON-GRADE DETAIL, GENERAL NOTES AND/OR SPECIFICATIONS.
2. SEE PLANS FOR SLAB CONSTRUCTION.

9 DEPRESSIONS AT SLAB-ON-GRADE
3/4" = 1'-0"

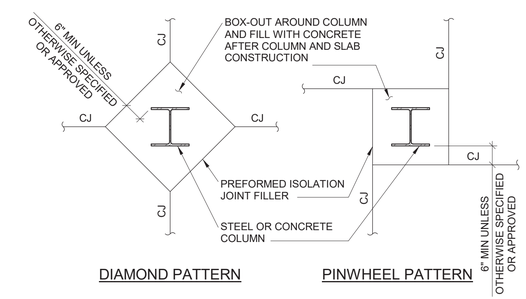

DIAMOND PATTERN PINWHEEL PATTERN

NOTES:
1. REMOVE TOP INCH OF PREFORMED ISOLATION JOINT FILLER AND SEAL JOINT AS REQUIRED FOR CONTROL JOINTS.
2. AT PINWHEEL PATTERN, CONTRACTOR HAS OPTION OF PLACING ISOLATION JOINT TIGHT TO COLUMN AND SAW CUT PINWHEEL PATTERN.

DETAILS AT COLUMNS

10 SLAB-ON-GRADE ISOLATION JOINT
1/2" = 1'-0"

DESIGN BY:									
DRAWN BY:									
CHECKED BY:									
APPROVED BY:			01/27/2020	ISSUE FOR BID	EJT	MW	TRM		
CDOT/APPROVED BY:		NO.	DATE	REVISIONS	DES.	DRW.	CHK.	DCCO	CDOT

SIMPSON GUMPERTZ & HEGER
Engineering of Structures and Building Enclosures
Simpson Gumpertz & Heger Inc.
135 South LaSalle Street, Suite 3800
Chicago, Illinois 60603
main: 312.754.7500 fax: 312.754.7501
www.sgh.com

PERKINS+WILL
The Wrigley Building
410 North Michigan Ave.
Suite 1600
Chicago, IL 60611
t 312.755.0770
f 312.755.0775
www.perkinswill.com

CDOT
CHICAGO DEPARTMENT OF TRANSPORTATION
DIVISION OF ENGINEERING

154 N DAMEN AVE - DAMEN GREEN LINE STATION

TYPICAL SLAB-ON-GRADE DETAILS

CDOT PROJECT D-7-135 | DATE: 01/27/2020

SPEC. NO.

DRAWING NO. **S30-06**

REVISION NO.

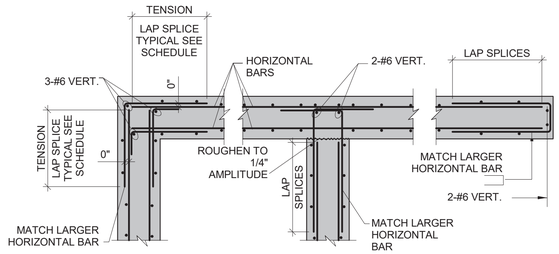

1 HORIZONTAL WALL REINFORCEMENT DETAILS

3/4" = 1'-0"

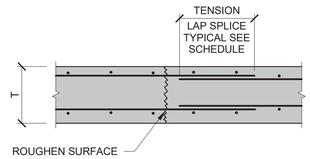

NOTES:
CONSTRUCTION JOINTS SHALL BE PLACED AT A VERTICAL CONTROL JOINT. SEE VERTICAL CONTROL JOINT DETAIL.

2 VERTICAL CONSTRUCTION JOINT

3/4" = 1'-0"

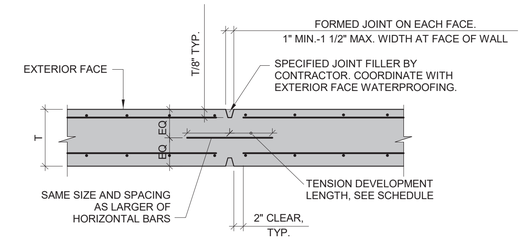

NOTES:
1. T INDICATES WALL THICKNESS.
2. 60' MAXIMUM SPACING BETWEEN CONTROL AND/OR CONSTRUCTION JOINTS.
3. PROVIDE JOINTS WITHIN 5 FT. OF ALL CORNERS AND/OR INTERSECTIONS.

3 VERT CONTROL JOINT - NOT EXPOSED WALL

3/4" = 1'-0"

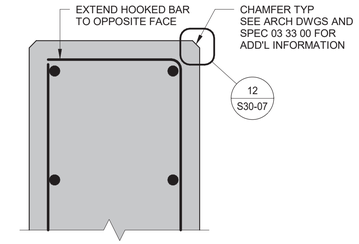

4 TYPICAL TOP OF EXPOSED CONCRETE WALL

1 1/2" = 1'-0"

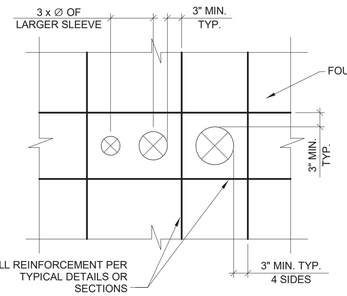

SLEEVE PENETRATIONS UP TO 6"Ø THROUGH FOUNDATION WALL PLACED WITHOUT NEED FOR DISPLACING REINFORCEMENT

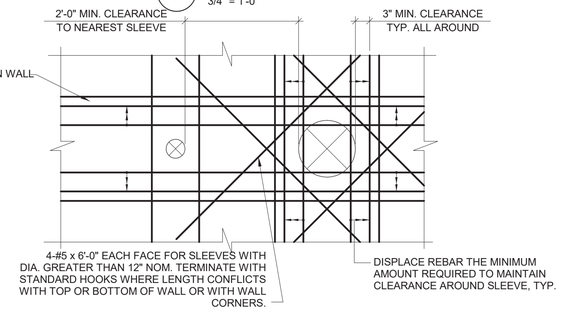

SLEEVE PENETRATIONS THROUGH FOUNDATION WALL PLACED WITH NEED FOR DISPLACING REINFORCEMENT CAGE - 3'-0" MAX., SLEEVE DIAMETER.

5 REINFORCEMENT AROUND PIPE SLEEVES

3/4" = 1'-0"

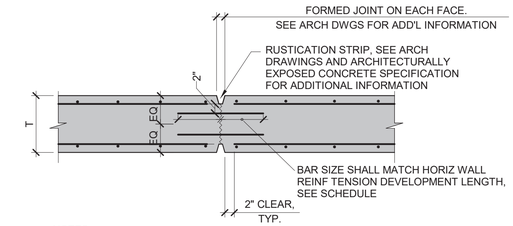

NOTES:
1. T INDICATES WALL THICKNESS.
2. DO NOT USE THIS DETAIL ON WALLS LONGER THAN 20'. FOR WALLS LONGER THAN 20', SEE DETAIL 9/S30-07
3. USE THIS DETAIL AT THE SHEARWALLS ON s7 AND s8 BETWEEN sD AND sH AND AT THE SHEARWALLS ON sD AND sF BETWEEN s7 AND s8.

6 VERTICAL RUSTICATION JOINT - ARCH EXPOSED SHEARWALL

3/4" = 1'-0"

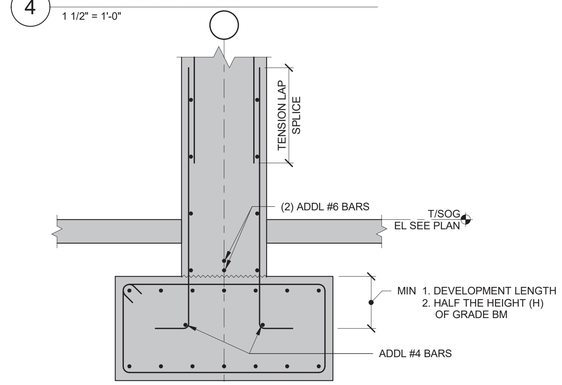

7 TYPICAL ACON WALL TO GRADE BEAM DETAILS

3/4" = 1'-0"

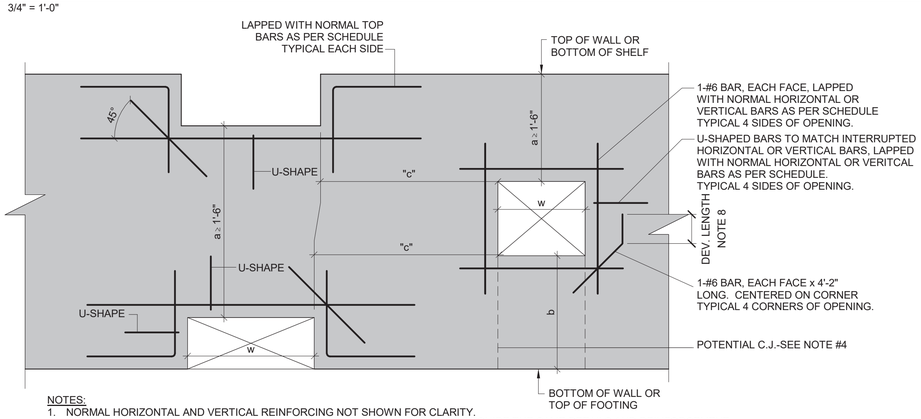

NOTES:
1. NORMAL HORIZONTAL AND VERTICAL REINFORCING NOT SHOWN FOR CLARITY.
2. OPENINGS ARE SHOWN SQUARE AND RECTANGULAR. CIRCULAR OPENINGS REQUIRE THE SAME DETAILS AND REINFORCEMENT.
3. WHEN DIMENSION "a" IS LESS THAN O.5 w, REPLACE U-SHAPED BARS WITH CLOSED STIRRUPS. SPACE CLOSED STIRRUPS TO MATCH VERTICAL WALL REINFORCING BUT NOT GREATER THAN "a"/2.
4. WHERE DIMENSION "b" IS SMALL AND PLACING/FINISHING OF CONCRETE BELOW OPENING IS DIFFICULT, THE GENERAL CONTRACTOR MAY ELECT TO ADD VERTICAL CONSTRUCTION JOINTS THAT ALIGN WITH THE EDGES OF THE OPENINGS PROVIDED THAT ALL REINFORCEMENT IS CONTINUOUS THROUGH THE JOINTS.
5. WHEN DIMENSION "c" IS LESS THAN 6'-0", THE ENGINEER MAY REQUIRE SPECIAL REINFORCEMENT AROUND THE OPENINGS. SUBMIT THESE OPENINGS TO THE ENGINEER FOR REVIEW.
6. SEE ALL THE CONTRACT DRAWINGS TO DETERMINE THE SIZES AND LOCATIONS OF ALL OPENINGS THROUGH THE CONCRETE WALLS.
7. HOLES IN SHEAR WALLS NOT SPECIFICALLY DETAILED IN THE DRAWINGS ARE PROHIBITED, UNLESS NOTED ON PLAN.
8. IF EXTENTION OF ADD'L CORNER BAR INTERSECTS END OF WALL OR OTHER OBSTRUCTION, HOOK THE BAR AND PROVIDE BAR DEVELOPMENT LENGTH

8 OPENING THROUGH CONCRETE WALL DETAIL

1/2" = 1'-0"

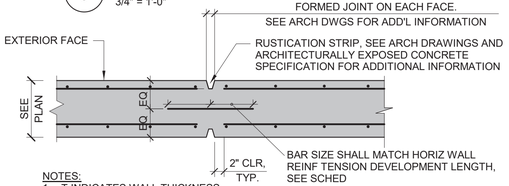

NOTES:
1. T INDICATES WALL THICKNESS.
2. 20' MAXIMUM SPACING BETWEEN CONTROL JOINTS.
3. PROVIDE JOINTS WITHIN 5' OF ALL CORNERS AND/OR INTERSECTIONS.
4. DO NOT USE THIS DETAIL AT THE SHEARWALLS ON s7 AND s8 BETWEEN sD AND sH OR AT THE SHEARWALLS ON sD AND sF BETWEEN s7 AND s8. USE DETAIL 6/S30-07

9 VERT CONTROL JOINT - ARCH EXPOSED NON-SHEARWALL

3/4" = 1'-0"

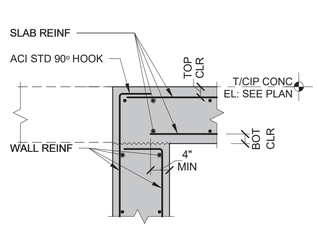

10 CAST-IN-PLACE CONCRETE SLAB TO WALL DETAIL

3/4" = 1'-0"

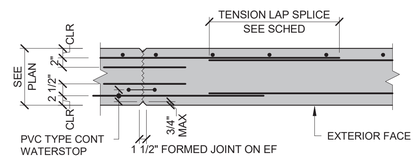

NOTES:
1. ARCHITECTURALLY EXPOSED CONCRETE CONSTRUCTION JOINTS OR CONTROL JOINTS SHALL BE PLACED ONLY AT RUSTICATION JOINTS.
2. REFER TO ARCHITECTURAL DRAWINGS FOR LOCATION OF RUSTICATION JOINTS.
3. PVC CONTINUOUS WATER STOP SHALL BE HEAT WELDED AT ALL SPLICES, CORNERS, AND INTERSTETIONS.

11 VERTICAL HORIZONTAL CONSTRUCTION JOINT - ARCHITECTURALLY EXPOSED CONCRETE

3/4" = 1'-0"

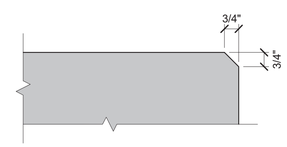

12 TYPICAL EXPOSED CONCRETE CORNER CHAMFER

3" = 1'-0"

DESIGN BY:									
DRAWN BY:									
CHECKED BY:									
APPROVED BY:			01/27/2020	ISSUE FOR BID	EJT	MW	TRM		
CDOT/APPROVED BY:		NO.	DATE	REVISIONS	DES.	DRW.	CHK.	DCCO	CDOT

SIMPSON GUMPERTZ & HEGER
Engineering of Structures and Building Enclosures
Simpson Gumpertz & Heger Inc.
135 South LaSalle Street, Suite 3800
Chicago, Illinois 60603
main: 312.754.7500 fax: 312.754.7501
www.sgh.com

PERKINS+WILL
The Wrigley Building
410 North Michigan Ave.
Suite 1600
Chicago, IL 60611
t 312.755.0770
f 312.755.0775
www.perkinswill.com

CDOT
CHICAGO DEPARTMENT OF TRANSPORTATION
DIVISION OF ENGINEERING

154 N DAMEN AVE - DAMEN GREEN LINE STATION

TYPICAL CONCRETE WALL DETAILS

CDOT PROJECT D-7-135 | DATE: 01/27/2020

SPEC. NO.

DRAWING NO. **S30-07**

REVISION NO.

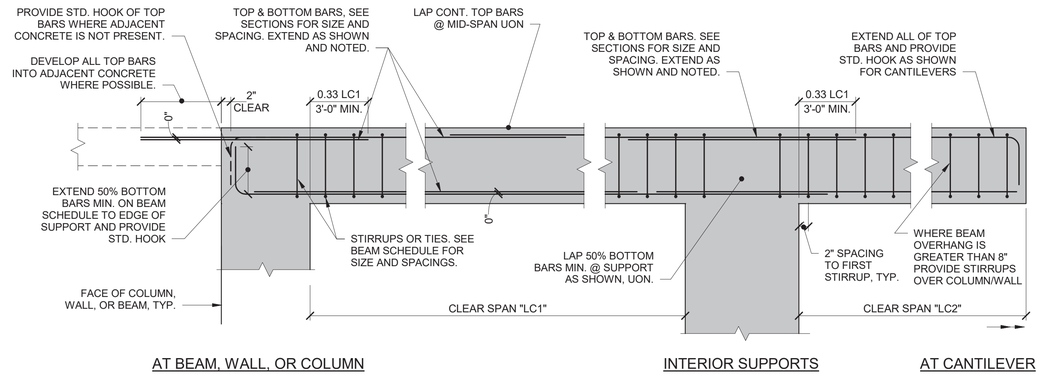

CONCRETE BEAM SCHEDULE (f'c = 5,000 psi)

Type	WIDTH ('W')	DEPTH ('H')	BOTTOM REBAR	TOP REBAR	SIDE REBAR	STIRRUPS	STIRRUP SPACING	REMARKS
CB18x24A	1'-6"	2'-0"	(3)#9	(3)#7	NONE	#4	4" OC	
CB18x24B	1'-6"	2'-0"	(4)#9	(4)#7	NONE	#4	3" OC	
CB18x36	1'-6"	3'-0"	(4)#9	(4)#7	NONE	#4	4" OC	
CB18x84	1'-6"	7'-0"	(3)#9	(3)#9	#5@5" OC	#5	8" OC	
CB24x24	2'-0"	2'-0"	(4)#8	(4)#8	NONE	#4	10"OC	

1 CONCRETE BEAM DETAIL
3/4" = 1'-0"

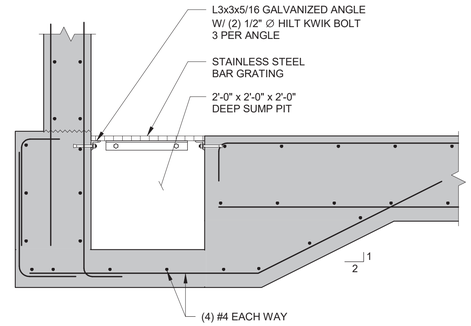

NOTES:
1. COORDINATE SUMP DRAINAGE WITH PLUMBING CONTRACTOR.
2. COORDINATE SUMP PIT SIZE WITH ELEVATOR MANUFACTURER.
3. COORDINATE WITH WATERPROOFING.

2 SUMP PIT
3/4" = 1'-0"

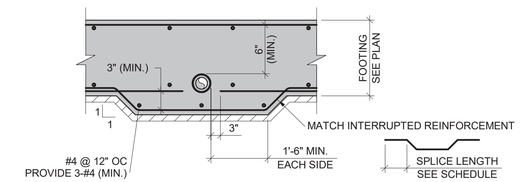

NOTES:
1. FOR DETAILS NOT NOTED, SEE "TYPICAL CONDITIONS FOR PIPES BELOW GRADE" DETAIL.
2. FOR ADDITIONAL INFORMATION, SEE "TYPICAL PIPE SLEEVE DETAIL" AND "TYPICAL ADDITIONAL REINFORCEMENT AT PIPE SLEEVE" DETAIL.
3. INDICATES SUBGRADES. SEE GENERAL NOTES AND/OR GEOTECHNICAL REPORT.

3 PENETRATION THROUGH FOOTING
1/2" = 1'-0"

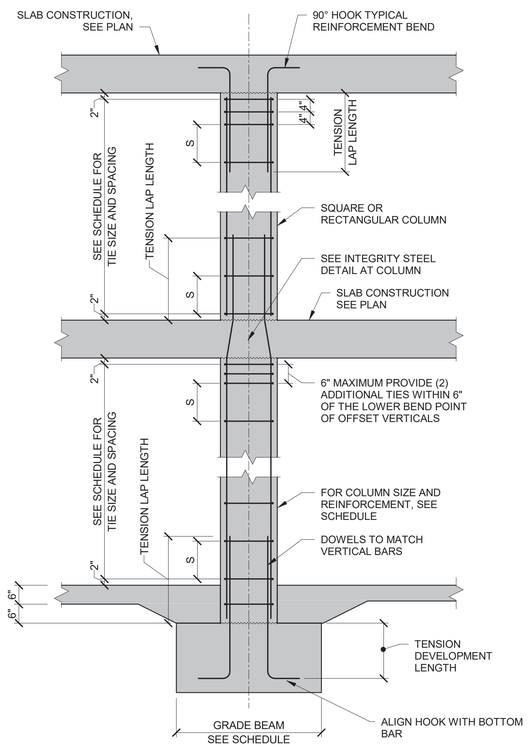

4 RECTANGULAR COLUMN ELEVATION
1/2" = 1'-0"

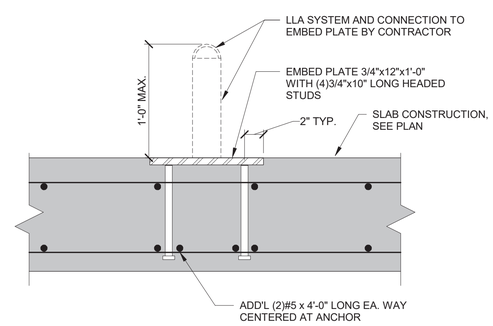

5 TYPICAL LLA ANCHORAGE PLATE AT CONCRETE SLAB
1 1/2" = 1'-0"

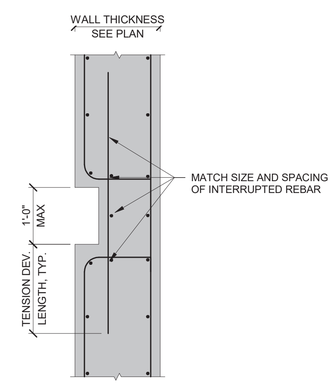

NOTES:
1. WHERE POSSIBLE, LAYOUT REBAR TO ACCOMMODATE WALL RECESS WITHOUT INTERUPTING VERTICAL AND HORIZONTAL REBAR.

6 TYPICAL WALL RECESS (12" OR LESS IN ANY DIRECTION)
3/4" = 1'-0"

DESIGN BY:									
DRAWN BY:									
CHECKED BY:									
APPROVED BY:			01/27/2020	ISSUE FOR BID	EJT	MW	TRM		
CDOT/APPROVED BY:		NO.	DATE	REVISIONS	DES.	DRW.	CHK.	DCCO	CDOT

SIMPSON GUMPERTZ & HEGER
Engineering of Structures and Building Enclosures
Simpson Gumpertz & Heger Inc.
135 South LaSalle Street, Suite 3800
Chicago, Illinois 60603
main: 312.754.7500 fax: 312.754.7501
www.sgh.com

PERKINS+WILL
The Wrigley Building
410 North Michigan Ave.
Suite 1600
Chicago, IL 60611
t 312.755.0770
f 312.755.0775
www.perkinswill.com

CDOT
CHICAGO DEPARTMENT OF TRANSPORTATION
DIVISION OF ENGINEERING

154 N DAMEN AVE - DAMEN GREEN LINE STATION

TYPICAL CONCRETE DETAILS

CDOT PROJECT D-7-135 | DATE: 01/27/2020

SPEC. NO.

DRAWING NO. **S30-08**

REVISION NO.

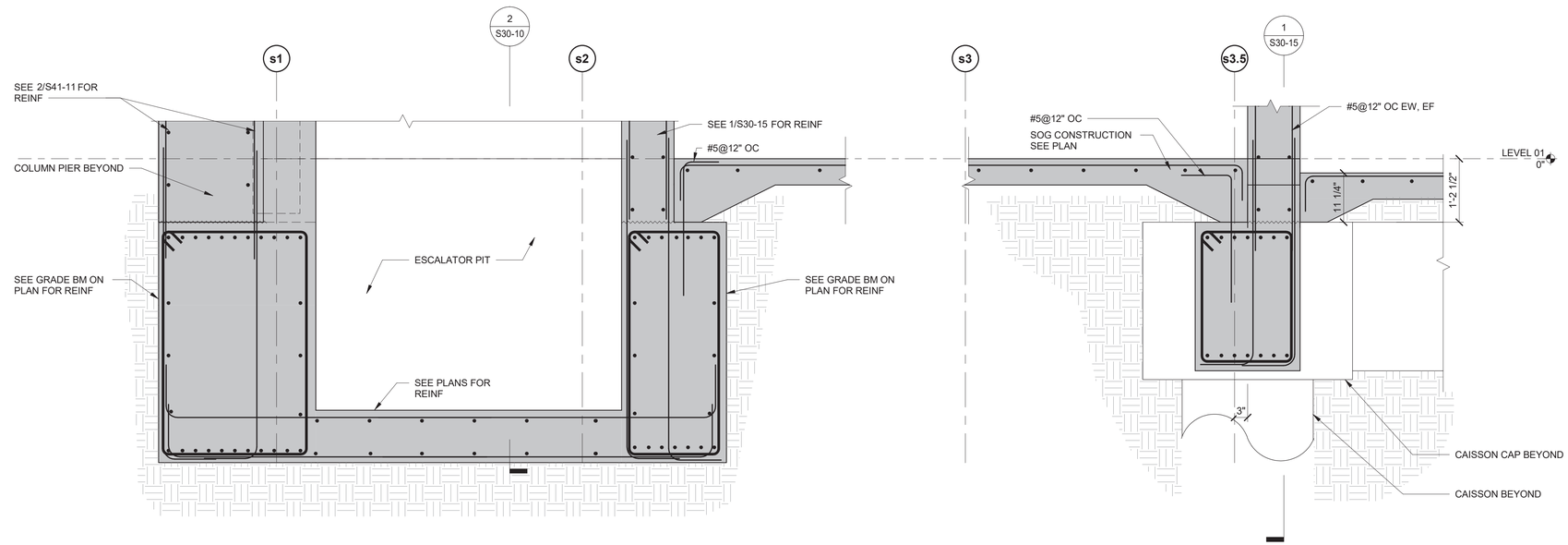

1 SECTION - BASE OF STAIR AND ESCALATOR PIT
3/4" = 1'-0"

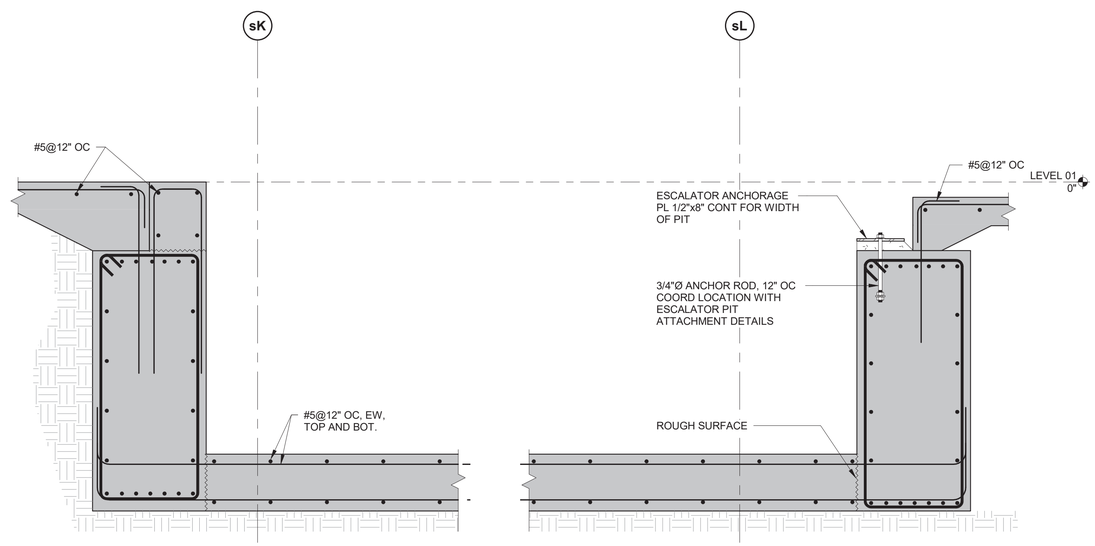

2 SECTION - ESCALATOR PIT
3/4" = 1'-0"

DESIGN BY:									
DRAWN BY:									
CHECKED BY:									
APPROVED BY:			01/27/2020	ISSUE FOR BID	EJT	MW	TRM		
CDOT/APPROVED BY:		NO.	DATE	REVISIONS	DES.	DRW.	CHK.	DCCO	CDOT

SIMPSON GUMPERTZ & HEGER
Engineering of Structures and Building Enclosures
Simpson Gumpertz & Heger Inc.
135 South LaSalle Street, Suite 3800
Chicago, Illinois 60603
main: 312.754.7500 fax: 312.754.7501
www.sgh.com

PERKINS+WILL
The Wrigley Building
410 North Michigan Ave.
Suite 1600
Chicago, IL 60611
t 312.755.0770
f 312.755.0775
www.perkinswill.com

CDOT
CHICAGO DEPARTMENT OF TRANSPORTATION
DIVISION OF ENGINEERING

154 N DAMEN AVE - DAMEN GREEN LINE STATION

STATION HOUSE FOUNDATION SECTIONS

CDOT PROJECT D-7-135 | DATE: 01/27/2020

SPEC. NO.

DRAWING NO. **S30-10**

REVISION NO.

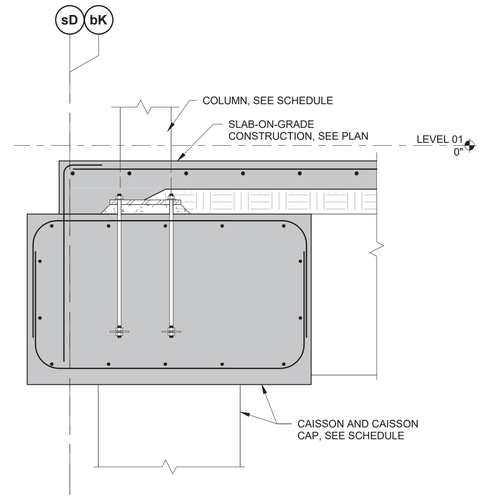

1 SECTION
3/4" = 1'-0"

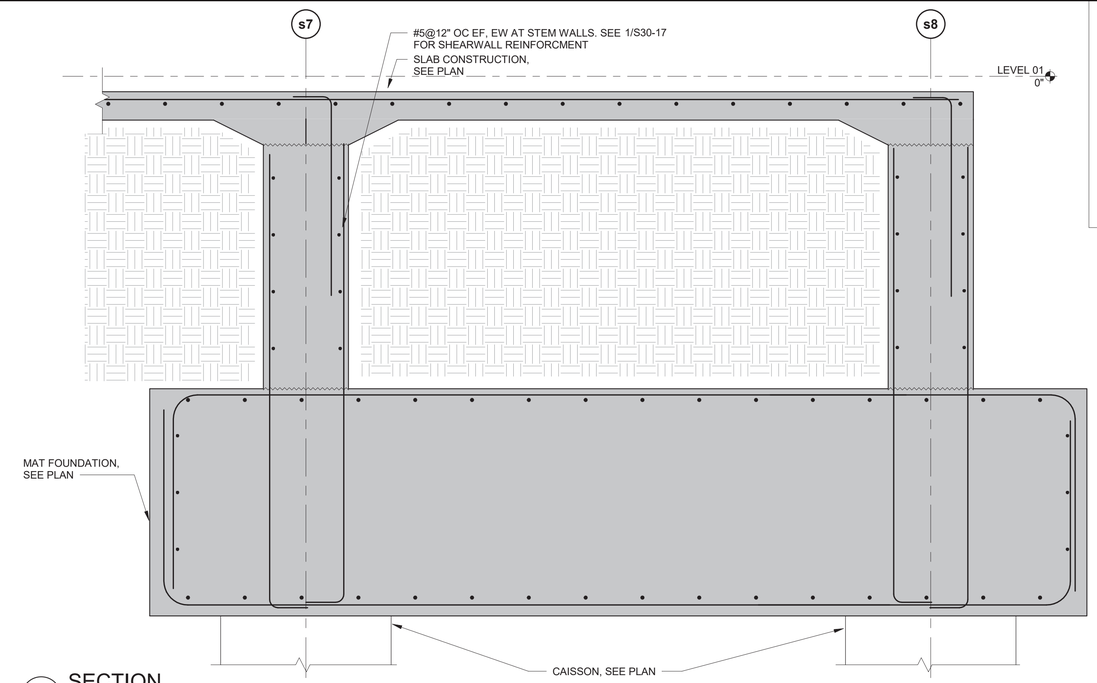

2 SECTION
3/4" = 1'-0"

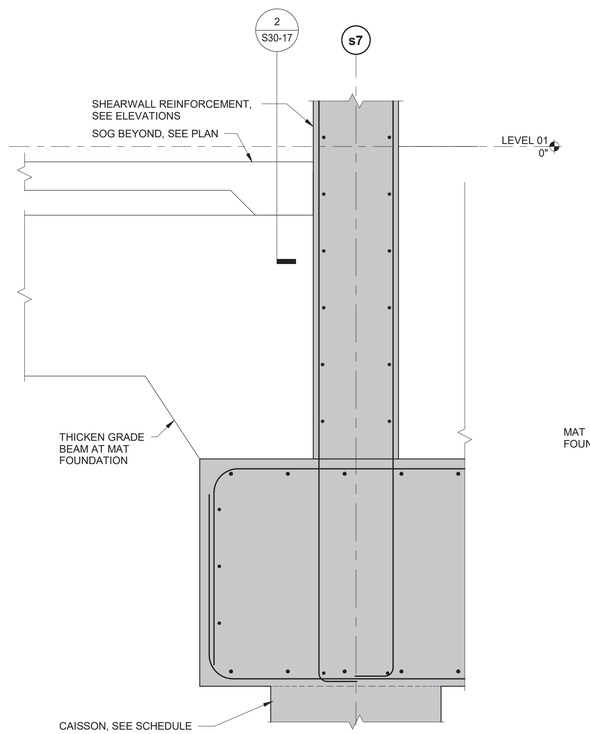

3 SECTION
3/4" = 1'-0"

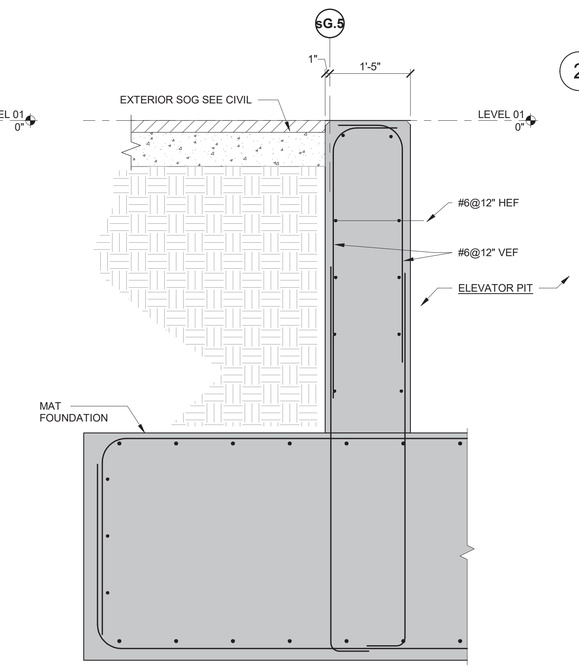

4 SECTION
3/4" = 1'-0"

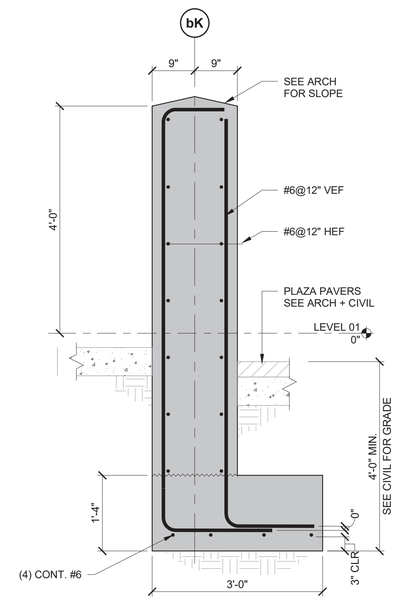

5 SECTION - SITE WALL
3/4" = 1'-0"

DESIGN BY:									
DRAWN BY:									
CHECKED BY:									
APPROVED BY:			01/27/2020	ISSUE FOR BID	EJT	HMM	TRM		
CDOT/APPROVED BY:		NO.	DATE	REVISIONS	DES.	DRW.	CHK.	DCCO	CDOT

SIMPSON GUMPERTZ & HEGER
Engineering of Structures and Building Enclosures
Simpson Gumpertz & Heger Inc.
135 South LaSalle Street, Suite 3800
Chicago, Illinois 60603
main: 312.754.7500 fax: 312.754.7501
www.sgh.com

PERKINS+WILL
The Wrigley Building
410 North Michigan Ave.
Suite 1600
Chicago, IL 60611
t 312.755.0770
f 312.755.0775
www.perkinswill.com

CDOT
CHICAGO DEPARTMENT OF TRANSPORTATION
DIVISION OF ENGINEERING

154 N DAMEN AVE - DAMEN GREEN LINE STATION

STATION HOUSE FOUNDATION SECTIONS

CDOT PROJECT D-7-135

DATE: 01/27/2020

SPEC. NO.

DRAWING NO. **S30-11**

REVISION NO.

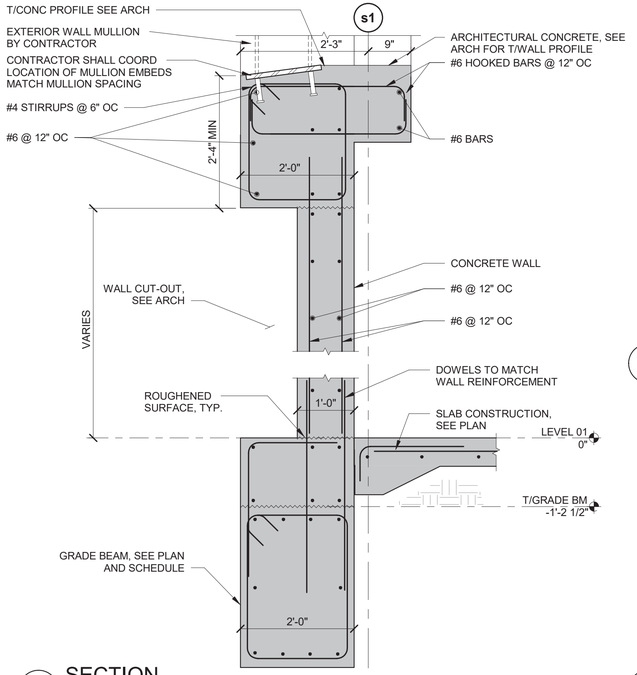

1 SECTION
3/4" = 1'-0"

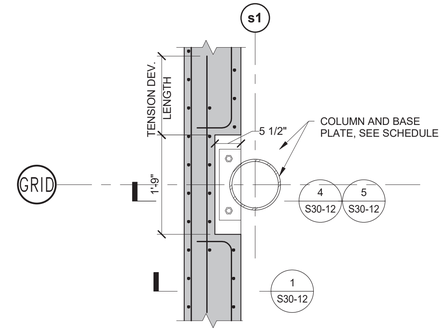

2 WEST WALL BASE PLATE PLAN DETAIL
3/4" = 1'-0"

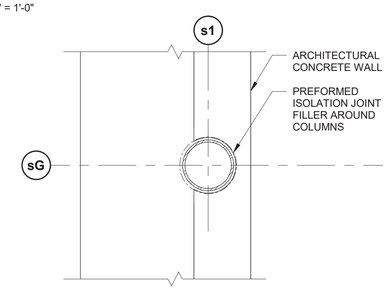

3 PLAN DETAIL OF COLUMN THROUGH WALL
3/4" = 1'-0"

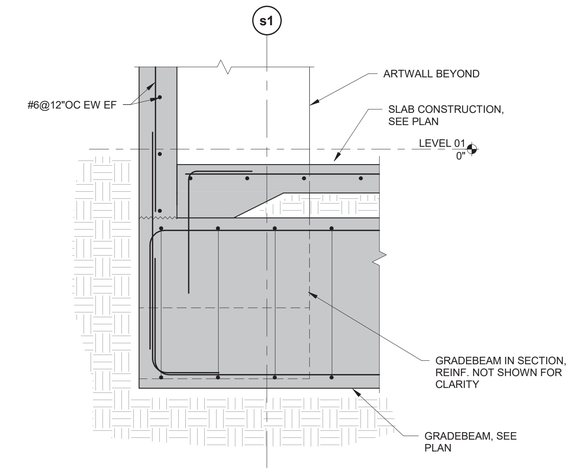

8 SECTION
3/4" = 1'-0"

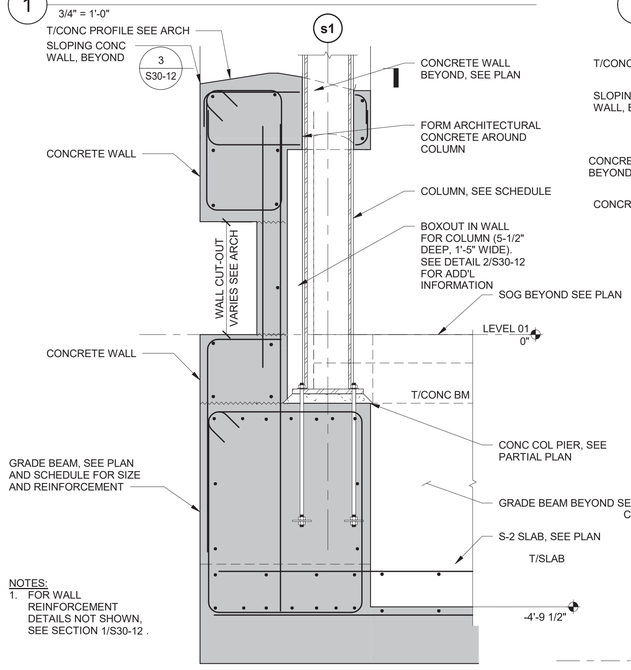

NOTES:
1. FOR WALL REINFORCEMENT DETAILS NOT SHOWN, SEE SECTION 1/S30-12 .

4 SECTION
3/4" = 1'-0"

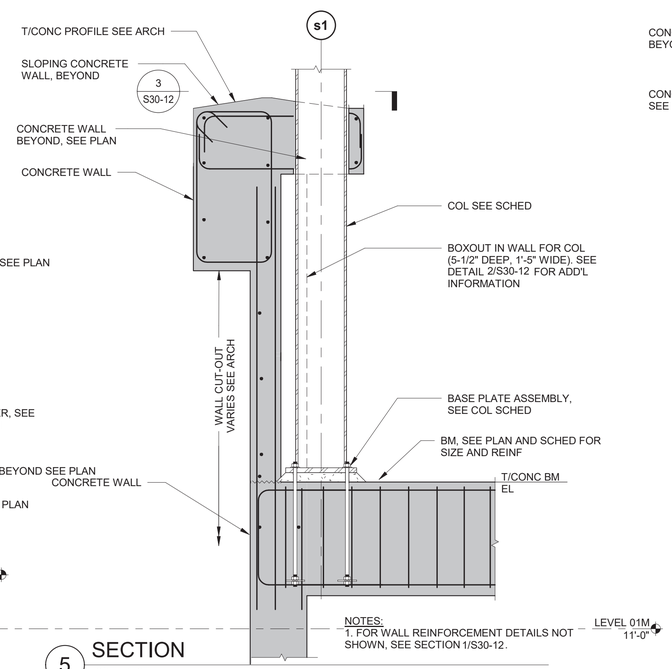

NOTES:
1. FOR WALL REINFORCEMENT DETAILS NOT SHOWN, SEE SECTION 1/S30-12 .

5 SECTION
3/4" = 1'-0"

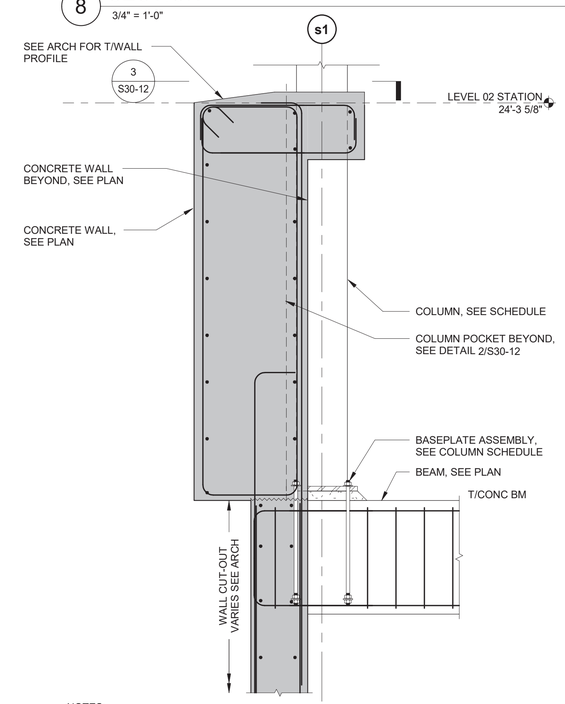

NOTES:
1. FOR WALL REINFORCEMENT DETAILS NOT SHOWN, SEE SECTION 1/S30-12

6 SECTION
3/4" = 1'-0"

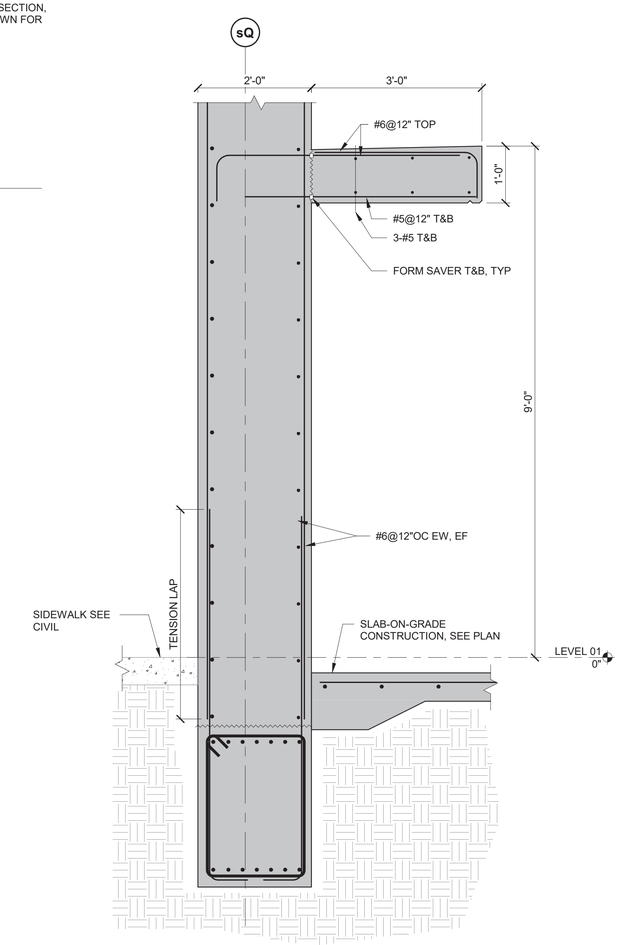

7 SECTION
3/4" = 1'-0"

DESIGN BY:									
DRAWN BY:									
CHECKED BY:									
APPROVED BY:			01/27/2020	ISSUE FOR BID	EJT	HMM	TRM		
CDOT/APPROVED BY:		NO.	DATE	REVISIONS	DES.	DRW.	CHK.	DCCO	CDOT

SIMPSON GUMPERTZ & HEGER
Engineering of Structures and Building Enclosures
Simpson Gumpertz & Heger Inc.
135 South LaSalle Street, Suite 3800
Chicago, Illinois 60603
main: 312.754.7500 fax: 312.754.7501
www.sgh.com

PERKINS+WILL
The Wrigley Building
410 North Michigan Ave.
Suite 1600
Chicago, IL 60611
t 312.755.0770
f 312.755.0775
www.perkinswill.com

CDOT
CHICAGO DEPARTMENT OF TRANSPORTATION
DIVISION OF ENGINEERING

154 N DAMEN AVE - DAMEN GREEN LINE STATION

STATION HOUSE FOUNDATION SECTIONS

CDOT PROJECT D-7-135 | DATE: 01/27/2020

SPEC. NO.

DRAWING NO. **S30-12**

REVISION NO.

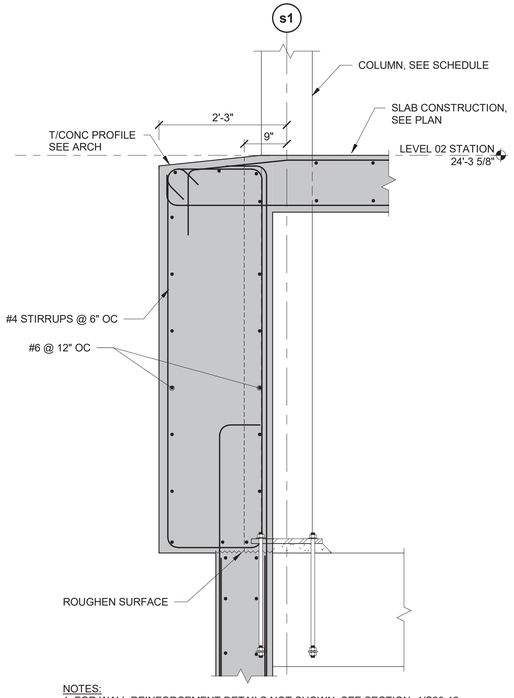

NOTES:
1. FOR WALL REINFORCEMENT DETAILS NOT SHOWN, SEE SECTION 1/S30-12

1 SECTION
3/4" = 1'-0"

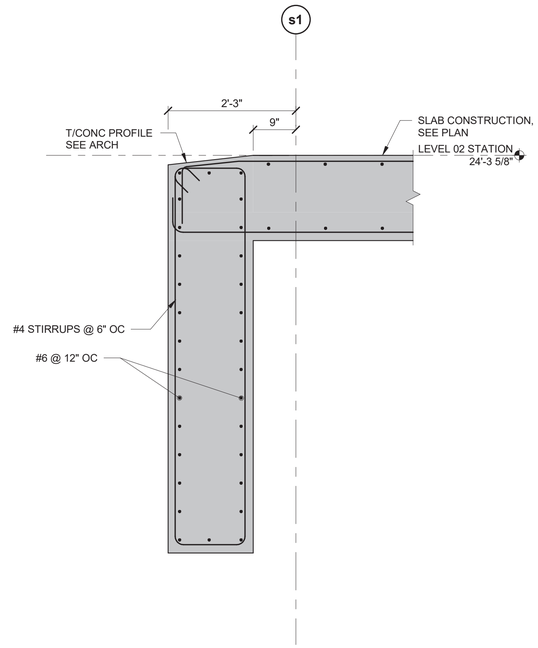

NOTES:
1. FOR WALL REINFORCEMENT DETAILS NOT SHOWN, SEE SECTION 1/S30-12

2 SECTION
3/4" = 1'-0"

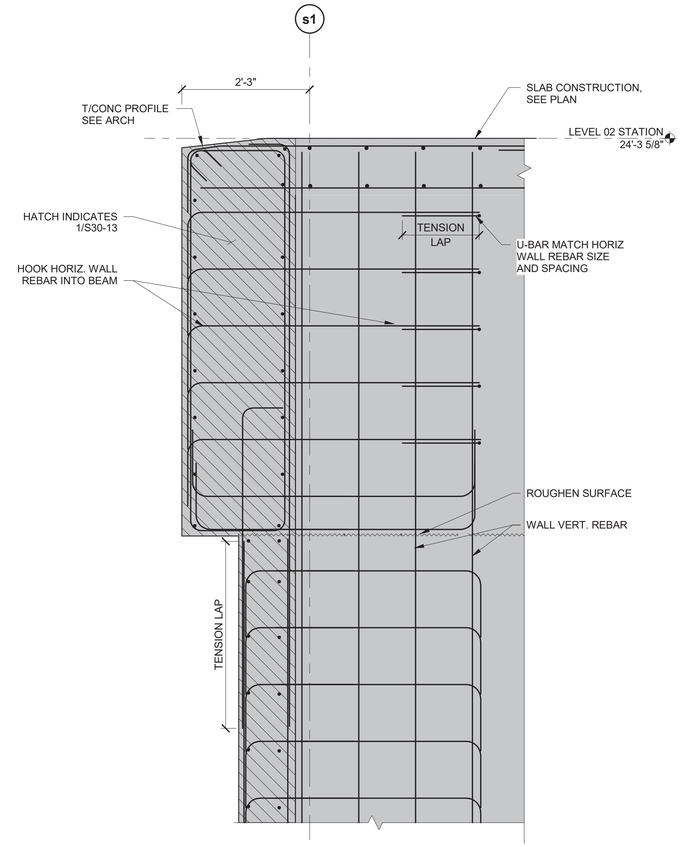

NOTES:
1. FOR WALL REINFORCEMENT DETAILS NOT SHOWN, SEE SECTION 1/S30-12 .

3 SECTION
3/4" = 1'-0"

DESIGN BY:									
DRAWN BY:									
CHECKED BY:									
APPROVED BY:			01/27/2020	ISSUE FOR BID	EJT	HMM	TRM		
CDOT/APPROVED BY:		NO.	DATE	REVISIONS	DES.	DRW.	CHK.	DCCO	CDOT

SIMPSON GUMPERTZ & HEGER
Engineering of Structures and Building Enclosures
Simpson Gumpertz & Heger Inc.
135 South LaSalle Street, Suite 3800
Chicago, Illinois 60603
main: 312.754.7500 fax: 312.754.7501
www.sgh.com

PERKINS+WILL
The Wrigley Building
410 North Michigan Ave.
Suite 1600
Chicago, IL 60611
t 312.755.0770
f 312.755.0775
www.perkinswill.com

CDOT
CHICAGO DEPARTMENT OF TRANSPORTATION
DIVISION OF ENGINEERING

154 N DAMEN AVE - DAMEN GREEN LINE STATION

STATION HOUSE CONCRETE DETAILS

CDOT PROJECT D-7-135

DATE: 01/27/2020

SPEC. NO.

DRAWING NO. S30-13

REVISION NO.

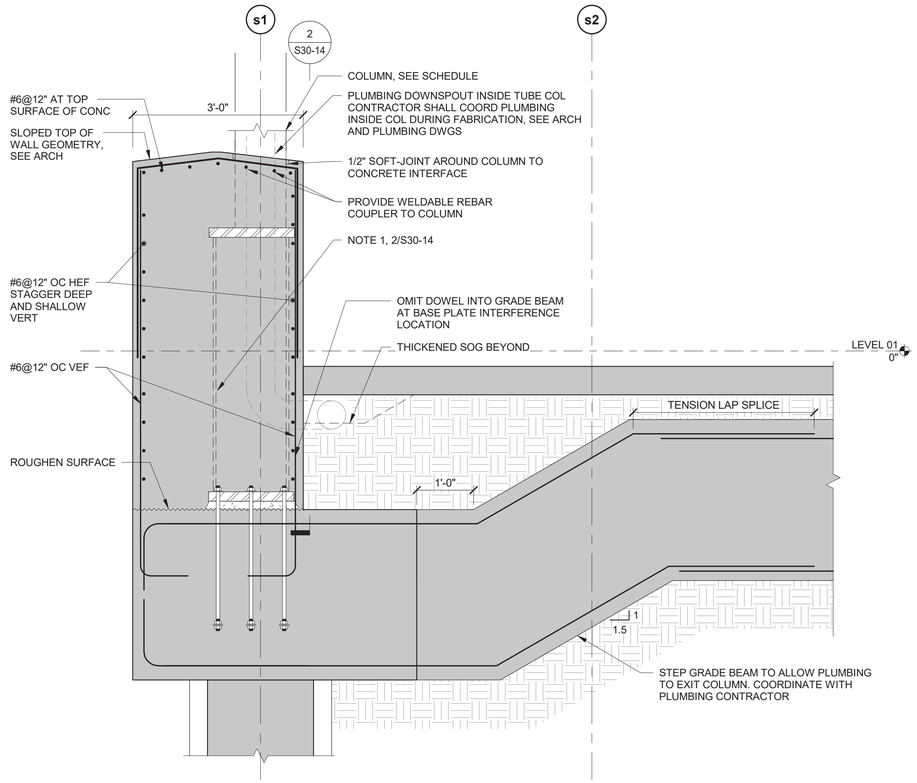

1 SECTION - PLUMBING DOWNSPOUT IN COLUMN

3/4" = 1'-0"

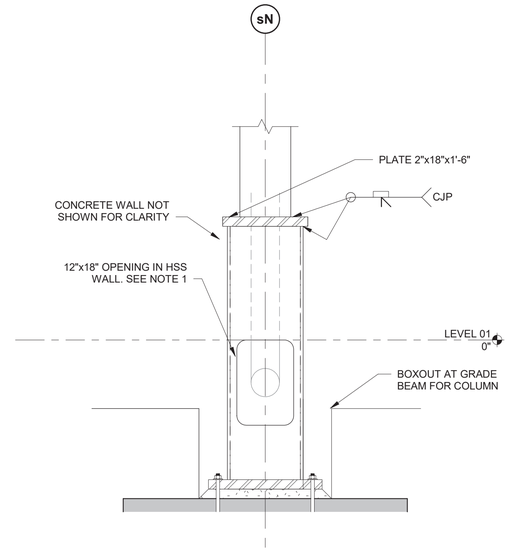

NOTES:

1. IF 12"x18" OPENING IS REQUIRED ON EAST AND WEST SIDE OF HSS FOR ACCESS TO PLUMBING, OPENING ON WEST FACE MUST BE FILLED IN WITH COVER PLATE AFTER PLUMBING INSTALLATION. COVER PLATE TO BE WELDED TO HSS WITH CJP GROOVE WELD. COVER PLATE THICKNESS TO MATCH HSS THICKNESS
2. CONTRACTOR TO COORDINATE STEEL FABRICATION AND PLUMBING INSTALLATION

2 SECTION - PLUMBING DOWNSPOUT IN COLUMN

3/4" = 1'-0"

DESIGN BY:									
DRAWN BY:									
CHECKED BY:									
APPROVED BY:			01/27/2020	ISSUE FOR BID	EJT	HMM	TRM		
CDOT/APPROVED BY:		NO.	DATE	REVISIONS	DES.	DRW.	CHK.	DCCO	CDOT

SIMPSON GUMPERTZ & HEGER
Engineering of Structures and Building Enclosures
Simpson Gumpertz & Heger Inc.
135 South LaSalle Street, Suite 3800
Chicago, Illinois 60603
main: 312.754.7500 fax: 312.754.7501
www.sgh.com

PERKINS+WILL
The Wrigley Building
410 North Michigan Ave.
Suite 1600
Chicago, IL 60611
t 312.755.0770
f 312.755.0775
www.perkinswill.com

CDOT
CHICAGO DEPARTMENT OF TRANSPORTATION
DIVISION OF ENGINEERING

154 N DAMEN AVE - DAMEN GREEN LINE STATION

STATION HOUSE CONCRETE DETAILS

CDOT PROJECT D-7-135

DATE: 01/27/2020

SPEC. NO.

DRAWING NO. **S30-14**

REVISION NO.

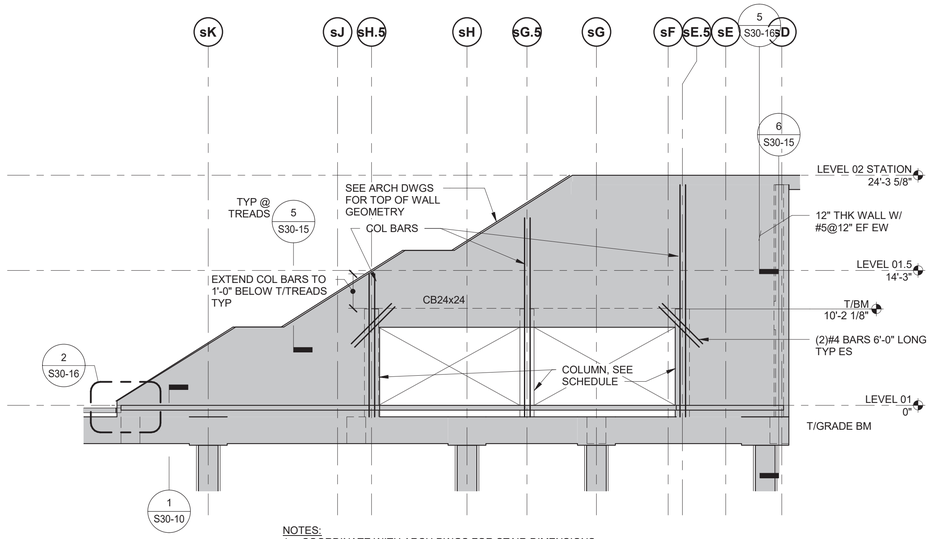

NOTES:
1. COORDINATE WITH ARCH DWGS FOR STAIR DIMENSIONS

1 ELEVATION - STATION HOUSE INTERIOR WALL
1/8" = 1'-0"

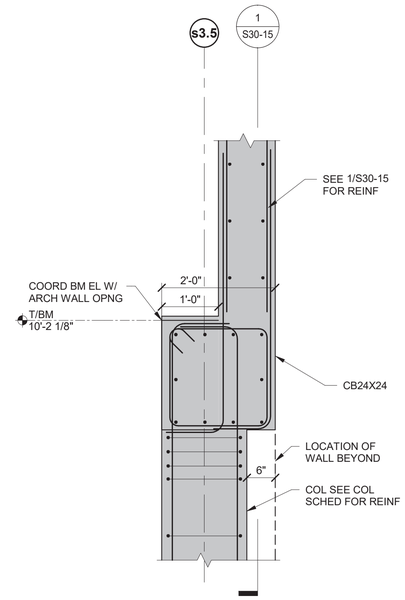

2 SECTION - STATION INTERIOR WALL HEADER
3/4" = 1'-0"

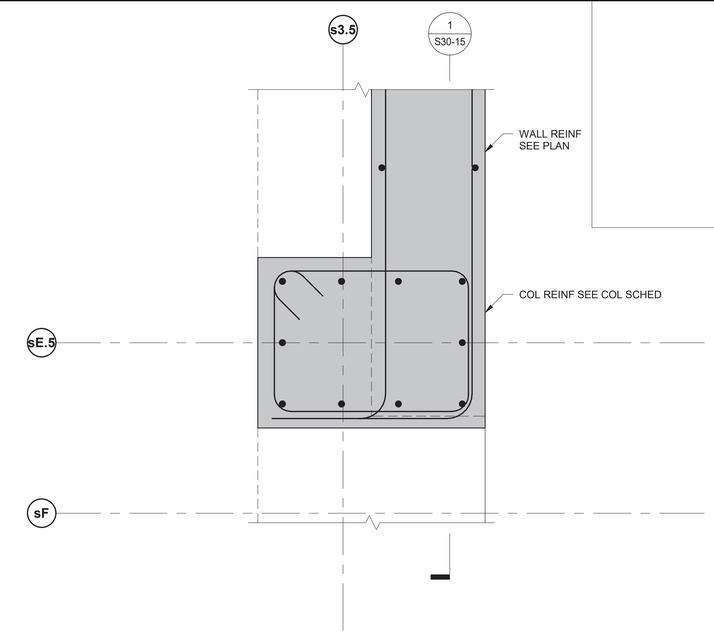

3 BOH PILASTER PART PLAN
1 1/2" = 1'-0"

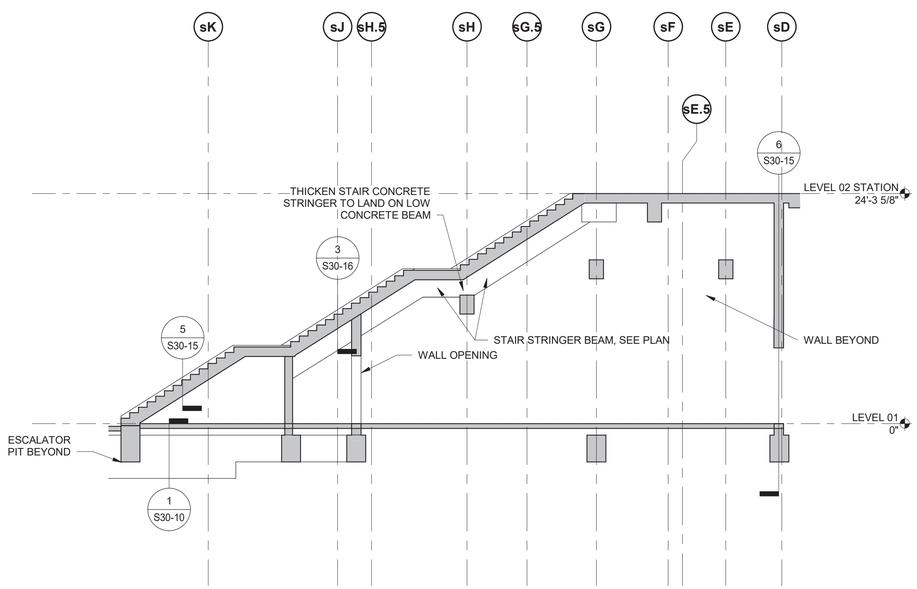

4 ELEVATION - STATION HOUSE STAIRS
1/8" = 1'-0"

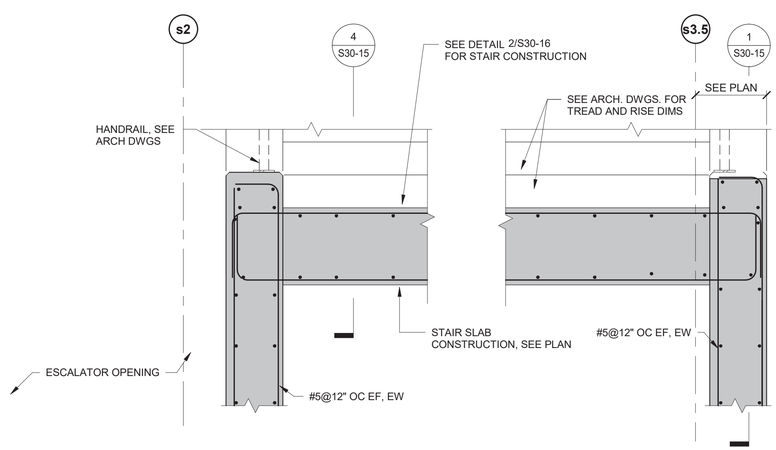

5 SECTION - STAIR TO WALL
3/4" = 1'-0"

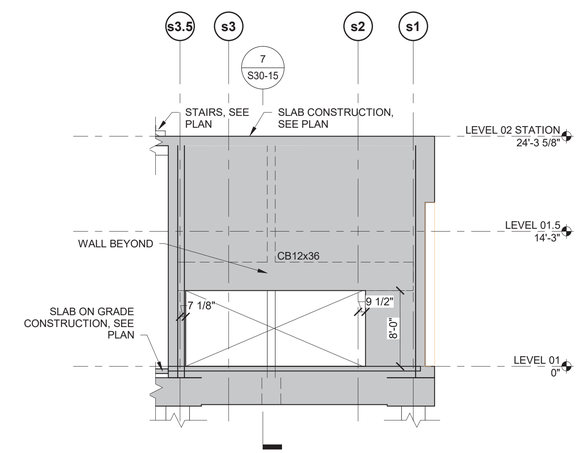

6 SECTION
1/8" = 1'-0"

DESIGN BY:									
DRAWN BY:									
CHECKED BY:									
APPROVED BY:			01/27/2020	ISSUE FOR BID	EJT	HMM	TRM		
CDOT/APPROVED BY:		NO.	DATE	REVISIONS	DES.	DRW.	CHK.	DCCO	CDOT

SIMPSON GUMPERTZ & HEGER
Engineering of Structures and Building Enclosures
Simpson Gumpertz & Heger Inc.
135 South LaSalle Street, Suite 3800
Chicago, Illinois 60603
main: 312.754.7500 fax: 312.754.7501
www.sgh.com

PERKINS+WILL
The Wrigley Building
410 North Michigan Ave.
Suite 1600
Chicago, IL 60611
t 312.755.0770
f 312.755.0775
www.perkinswill.com

CDOT
CHICAGO DEPARTMENT OF TRANSPORTATION
DIVISION OF ENGINEERING

154 N DAMEN AVE - DAMEN GREEN LINE STATION

STATION HOUSE CONCRETE DETAILS

CDOT PROJECT D-7-135 | DATE: 01/27/2020

SPEC. NO.

DRAWING NO. **S30-15**

REVISION NO.

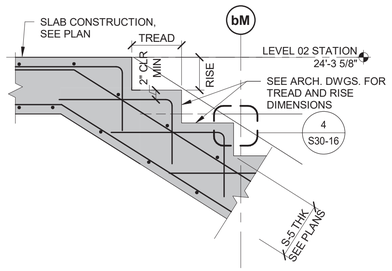

1 SECTION - STATION HOUSE STAIR TOP
3/4" = 1'-0"

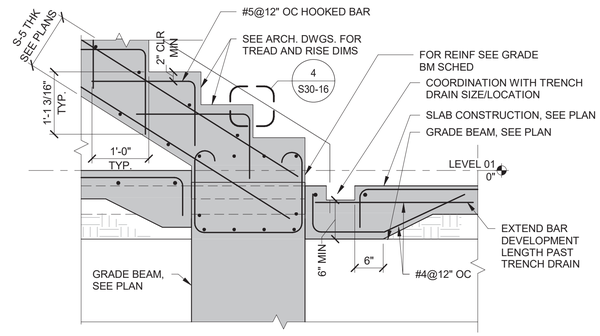

2 SECTION - STATION HOUSE STAIR BASE
3/4" = 1'-0"

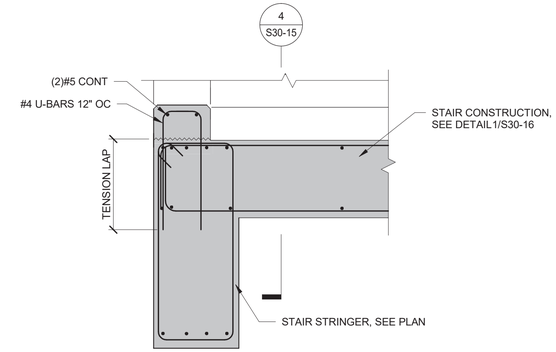

3 SECTION - STAIR STRINGER BEAM
3/4" = 1'-0"

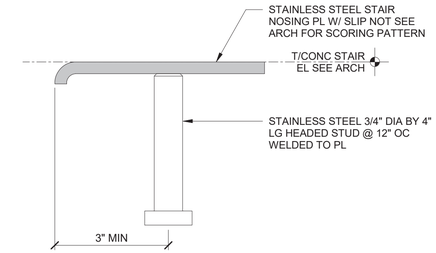

4 TREAD PLATE
6" = 1'-0"

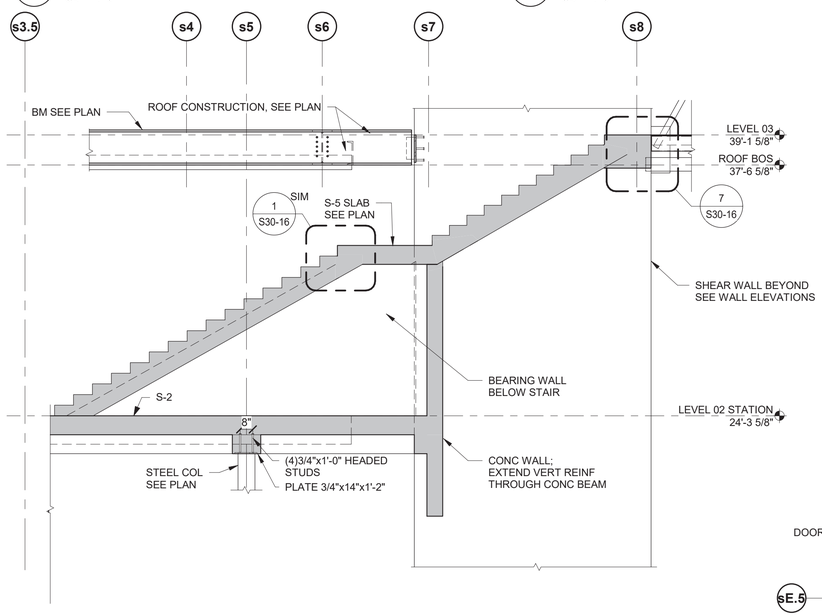

5 SECTION - BRIDGE ACCESS STAIR
1/4" = 1'-0"

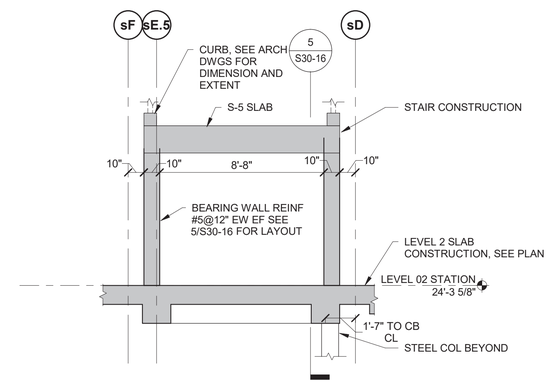

6 SECTION - BRIDGE ACCESS STAIR
1/4" = 1'-0"

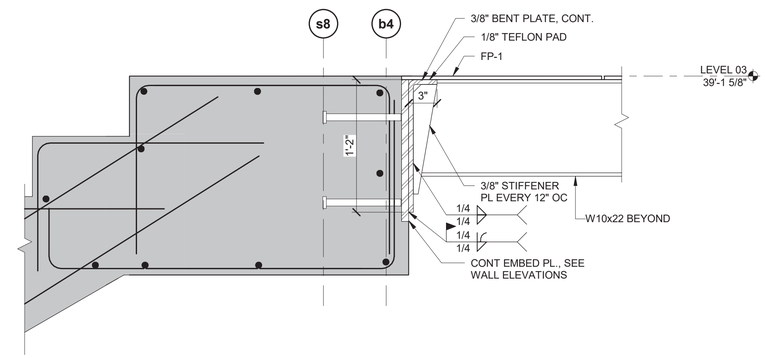

7 SECTION - BRIDGE ACCESS STAIR TRANSITION
1 1/2" = 1'-0"

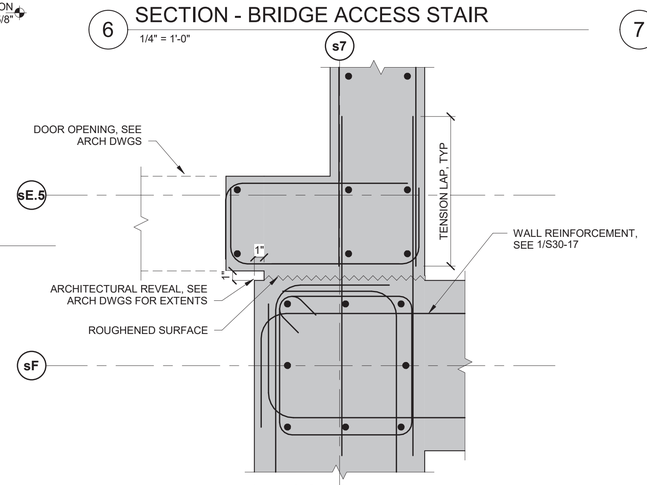

8 PLAN DETAIL - CONCRETE REVEAL
1 1/2" = 1'-0"

DESIGN BY:									
DRAWN BY:									
CHECKED BY:									
APPROVED BY:			01/27/2020	ISSUE FOR BID	EJT	MW	TRM		
CDOT/APPROVED BY:		NO.	DATE	REVISIONS	DES.	DRW.	CHK.	DCCO	CDOT

SIMPSON GUMPERTZ & HEGER
Engineering of Structures and Building Enclosures
Simpson Gumpertz & Heger Inc.
135 South LaSalle Street, Suite 3800
Chicago, Illinois 60603
main: 312.754.7500 fax: 312.754.7501
www.sgh.com

PERKINS+WILL
The Wrigley Building
410 North Michigan Ave.
Suite 1600
Chicago, IL 60611
t 312.755.0770
f 312.755.0775
www.perkinswill.com

CDOT
CHICAGO DEPARTMENT OF TRANSPORTATION
DIVISION OF ENGINEERING

154 N DAMEN AVE - DAMEN GREEN LINE STATION

STATION HOUSE CONCRETE DETAILS

CDOT PROJECT D-7-135 | DATE: 01/27/2020

SPEC. NO.

DRAWING NO. **S30-16**

REVISION NO.

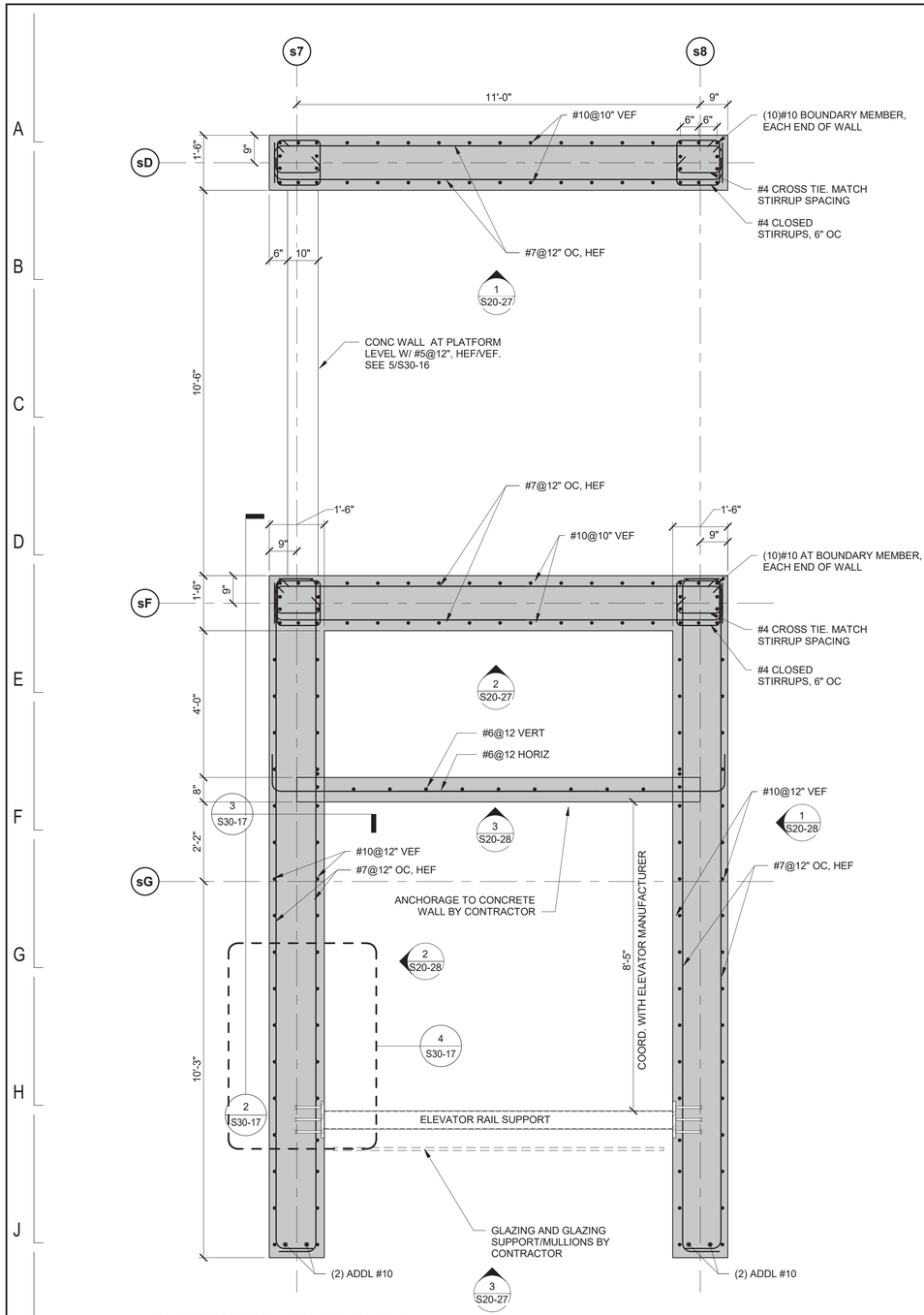

1 SHEARWALL- PART PLAN
1/2" = 1'-0"

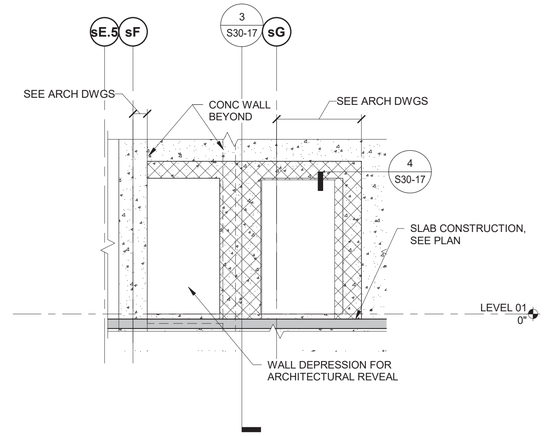

2 WALL ELEVATION
1/4" = 1'-0"

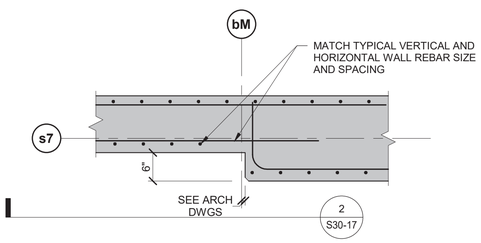

4 PLAN DETAIL - ARCHITECTURAL WALL REVEAL
3/4" = 1'-0"

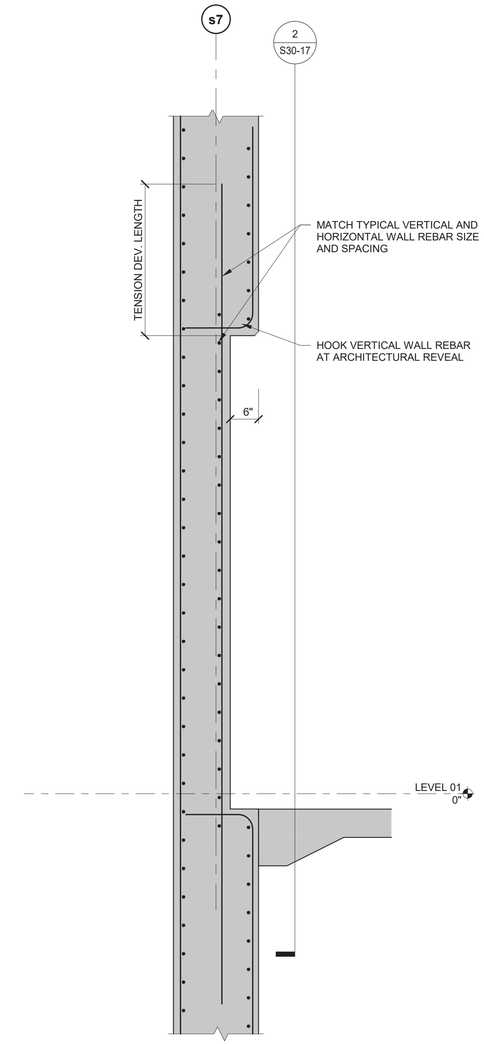

3 SECTION - ARCHITECTURAL WALL REVEAL
3/4" = 1'-0"

DESIGN BY:								
DRAWN BY:								
CHECKED BY:								
APPROVED BY:			01/27/2020	ISSUE FOR BID	EJT	HMM	TRM	
CDOT/APPROVED BY:		NO.	DATE	REVISIONS	DES.	DRW.	CHK.	DCCO	CDOT

SIMPSON GUMPERTZ & HEGER
Engineering of Structures and Building Enclosures
Simpson Gumpertz & Heger Inc.
135 South LaSalle Street, Suite 3800
Chicago, Illinois 60603
main: 312.754.7500 fax: 312.754.7501
www.sgh.com

PERKINS+WILL
The Wrigley Building
410 North Michigan Ave.
Suite 1600
Chicago, IL 60611
t 312.755.0770
f 312.755.0775
www.perkinswill.com

CDOT
CHICAGO DEPARTMENT OF TRANSPORTATION
DIVISION OF ENGINEERING

154 N DAMEN AVE - DAMEN GREEN LINE STATION

STATION HOUSE CONCRETE SHEARWALL DETAILS

CDOT PROJECT D-7-135 | DATE: 01/27/2020

SPEC. NO.

DRAWING NO. **S30-17**

REVISION NO.

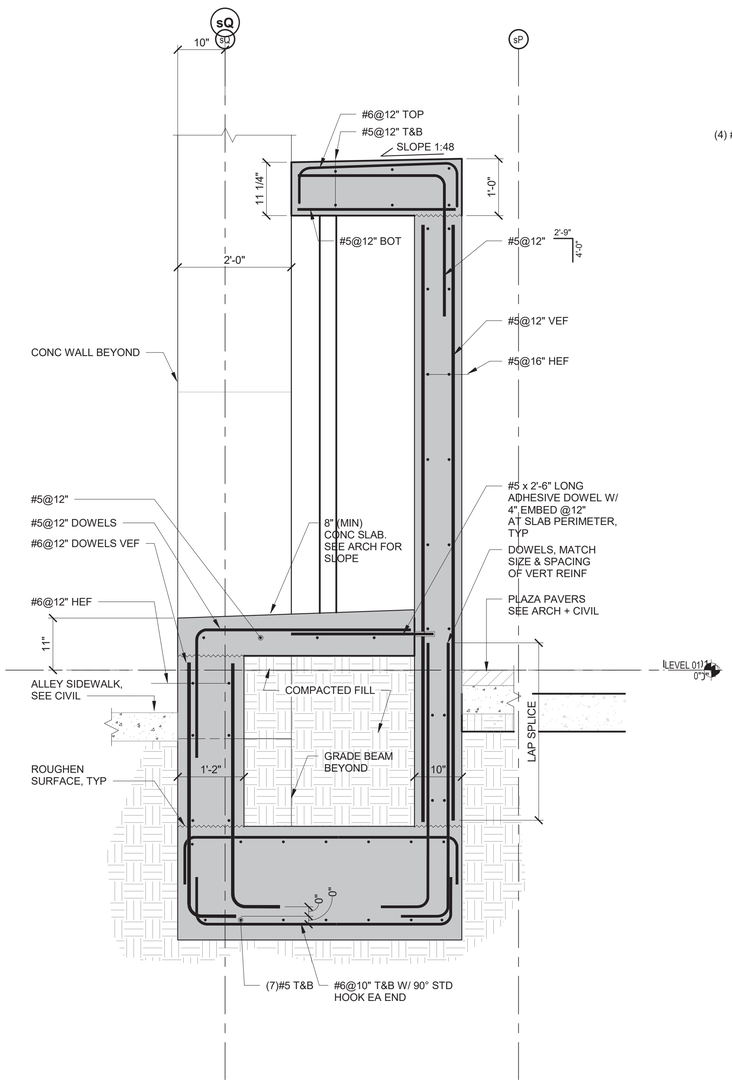

1 SECTION - BUS STOP CANOPY
3/4" = 1'-0"

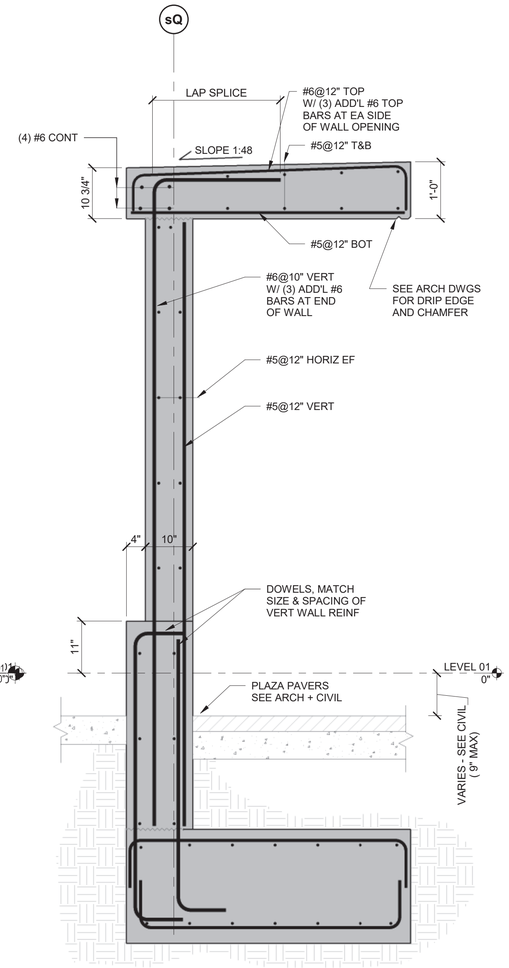

NOTES:
1. SEE 1/S30-19 FOR BALANCE OF INFORMATION.

2 SECTION - BUS STOP CANOPY
3/4" = 1'-0"

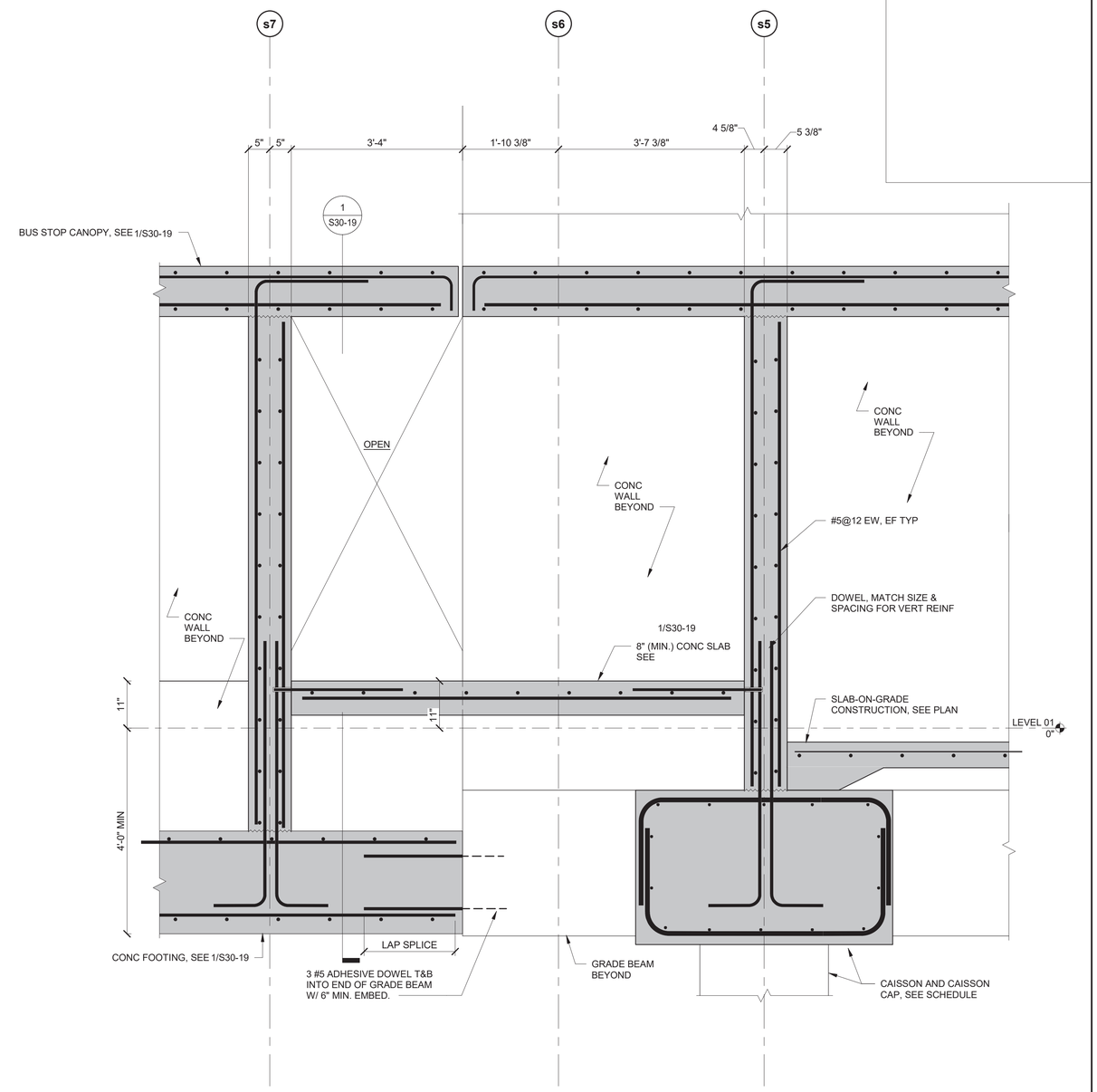

3 SECTION - BUS STOP CANOPY
3/4" = 1'-0"

DESIGN BY:									
DRAWN BY:									
CHECKED BY:									
APPROVED BY:			01/27/2020	ISSUE FOR BID	EJT	MW	TRM		
CDOT/APPROVED BY:		NO.	DATE	REVISIONS	DES.	DRW.	CHK.	DCCO	CDOT

SIMPSON GUMPERTZ & HEGER
Engineering of Structures and Building Enclosures
Simpson Gumpertz & Heger Inc.
135 South LaSalle Street, Suite 3800
Chicago, Illinois 60603
main: 312.754.7500 fax: 312.754.7501
www.sgh.com

PERKINS+WILL
The Wrigley Building
410 North Michigan Ave.
Suite 1600
Chicago, IL 60611
t 312.755.0770
f 312.755.0775
www.perkinswill.com

CDOT
CHICAGO DEPARTMENT OF TRANSPORTATION
DIVISION OF ENGINEERING

154 N DAMEN AVE - DAMEN GREEN LINE STATION

BUS CANOPY SECTIONS

CDOT PROJECT D-7-135 | DATE: 01/27/2020

SPEC. NO.

DRAWING NO. **S30-19**

REVISION NO.

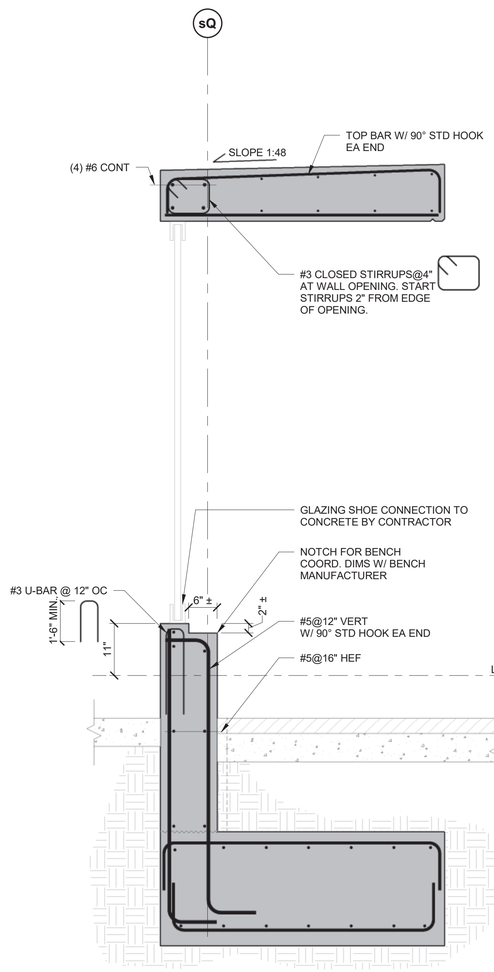

NOTES:
1. SEE 1/S30-19 FOR BALANCE OF INFORMATION

1 SECTION - BUS STOP CANOPY
3/4" = 1'-0"

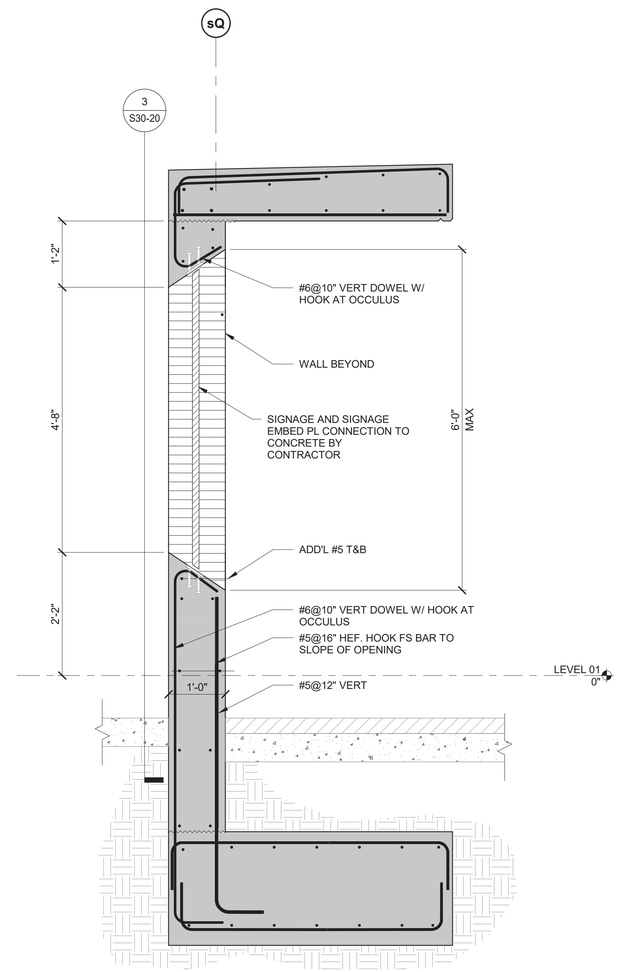

NOTES:
1. SEE 1/S30-19 FOR BALANCE OF INFORMATION.
2. DIMENSIONS FOR OCCULUS ARE MAXIMUMS; COORDINATE DIMENSIONS WITH ARCH DWGS.

2 SECTION - BUS STOP CANOPY
3/4" = 1'-0"

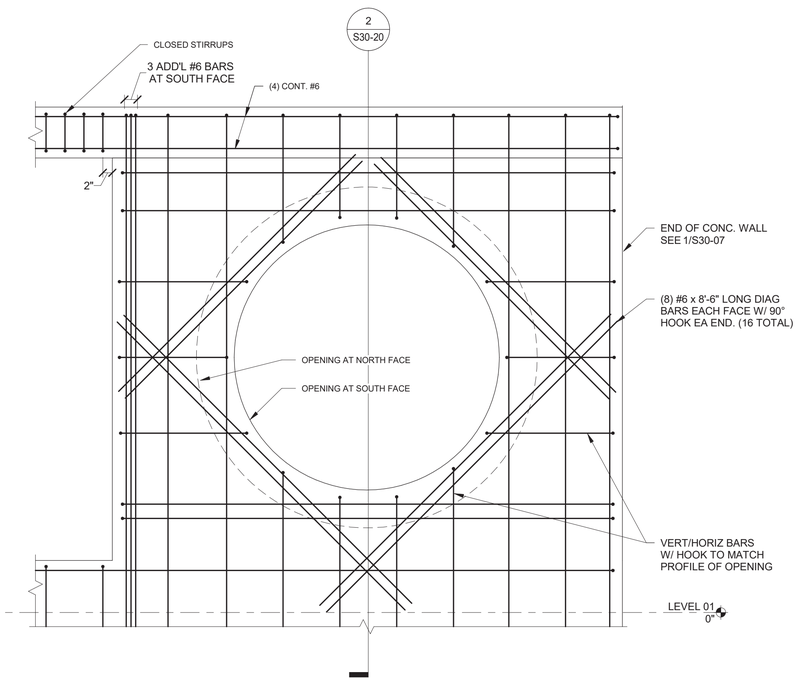

3 ELEVATION - BUS CANOPY
3/4" = 1'-0"

DESIGN BY:									
DRAWN BY:									
CHECKED BY:									
APPROVED BY:			01/27/2020	ISSUE FOR BID	CJB	HMM	TRM		
CDOT/APPROVED BY:		NO.	DATE	REVISIONS	DES.	DRW.	CHK.	DCCO	CDOT

SIMPSON GUMPERTZ & HEGER
Engineering of Structures and Building Enclosures
Simpson Gumpertz & Heger Inc.
135 South LaSalle Street, Suite 3800
Chicago, Illinois 60603
main: 312.754.7500 fax: 312.754.7501
www.sgh.com

PERKINS+WILL
The Wrigley Building
410 North Michigan Ave.
Suite 1600
Chicago, IL 60611
t 312.755.0770
f 312.755.0775
www.perkinswill.com

CDOT
CHICAGO DEPARTMENT OF TRANSPORTATION
DIVISION OF ENGINEERING

154 N DAMEN AVE - DAMEN GREEN LINE STATION

BUS CANOPY SECTIONS

CDOT PROJECT D-7-135 | DATE: 01/27/2020

SPEC. NO.

DRAWING NO. **S30-20**

REVISION NO.

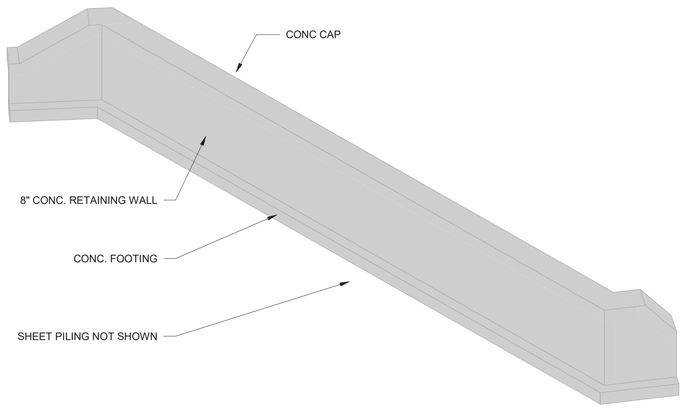

RETAINING WALL 3D

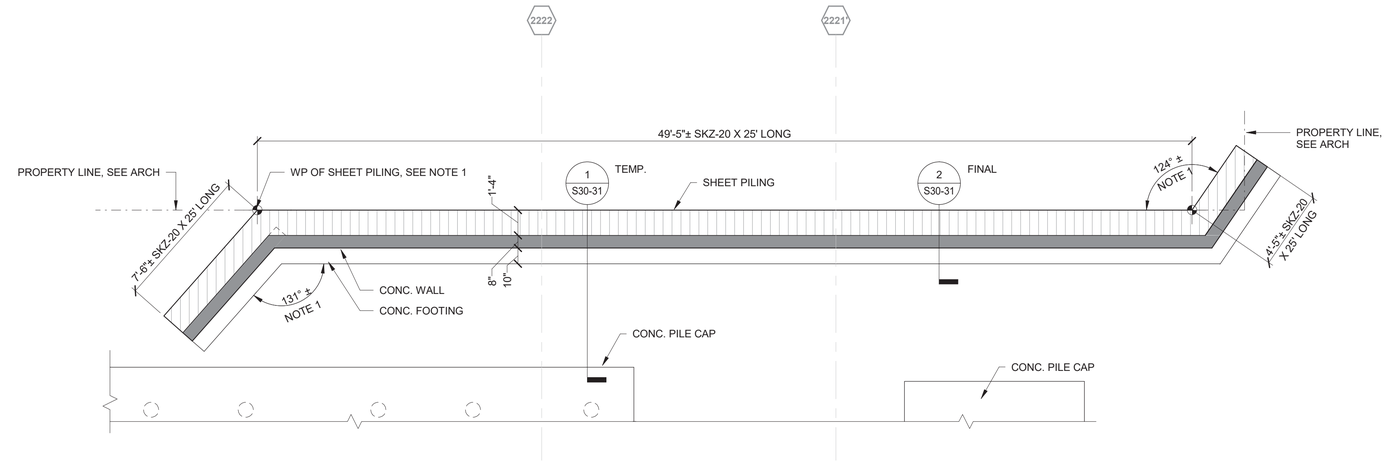

NOTES:
1. REFER TO CIVIL AND ARCH DWGS FOR EXTENT AND LOCATION OF SHEET PILING AND RETAINING WALL.

1 RETAINING WALL - FOUNDATION PLAN

1/4" = 1'-0"

SHEET NOTES:
1. REFER TO SPECIFICATION 31 50 01 PERMANENT EXCAVATION SUPPORT AND PROTECTION FOR SHEET PILING SHOWN ON THIS SHEET.

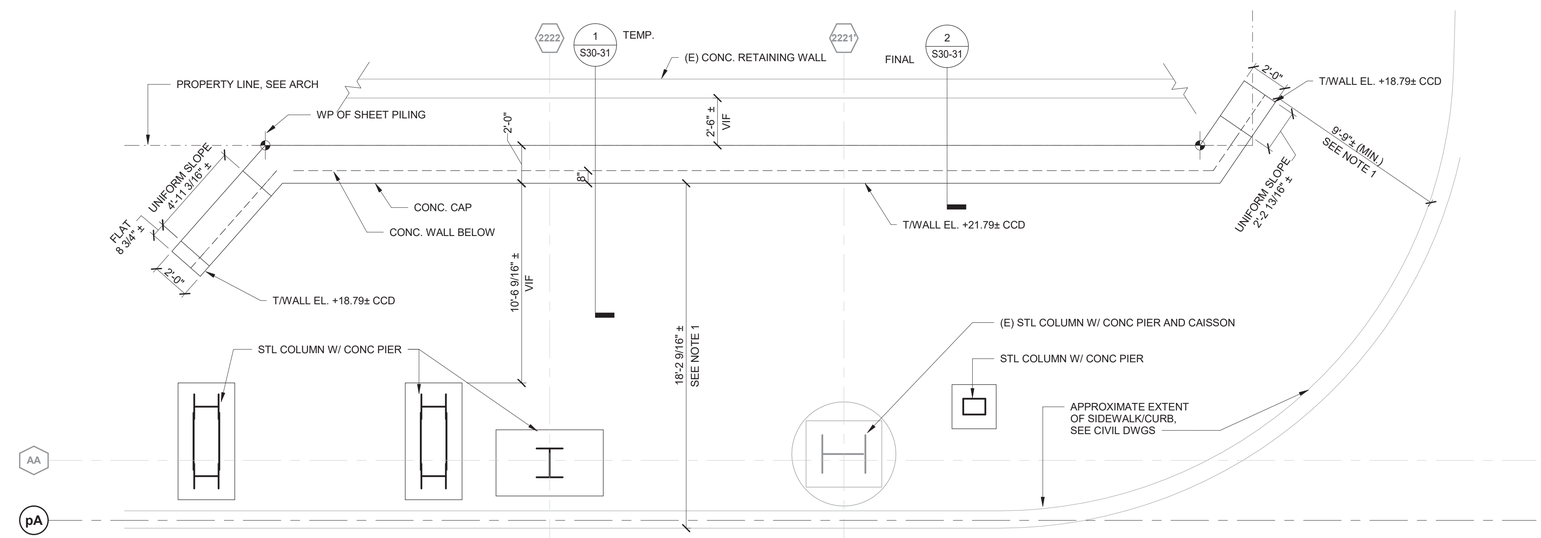

NOTES:
1. PLAN DIMENSIONS SHOWN FOR REFERENCE; REFER TO CIVIL AND ARCH DWGS FOR EXTENT, LOCATION, SLOPE, SKEW, AND OTHER GEOMETRY OF SHEET PILING AND RETAINING WALL.

2 RETAINING WALL AT GRADE

1/4" = 1'-0"

DESIGN BY:									
DRAWN BY:									
CHECKED BY:									
APPROVED BY:			01/27/2020	ISSUE FOR BID	EJT	HMM	TRM		
CDOT/APPROVED BY:		NO.	DATE	REVISIONS	DES.	DRW.	CHK.	DCCO	CDOT

SIMPSON GUMPERTZ & HEGER
Engineering of Structures and Building Enclosures
Simpson Gumpertz & Heger Inc.
135 South LaSalle Street, Suite 3800
Chicago, Illinois 60603
main: 312.754.7500 fax: 312.754.7501
www.sgh.com

PERKINS+WILL
The Wrigley Building
410 North Michigan Ave.
Suite 1600
Chicago, IL 60611
t 312.755.0770
f 312.755.0775
www.perkinswill.com

CDOT
CHICAGO DEPARTMENT OF TRANSPORTATION
DIVISION OF ENGINEERING

154 N DAMEN AVE - DAMEN GREEN LINE STATION

SPEC. NO.

SITE RETAINING WALL PLAN

DRAWING NO. **S30-30**

CDOT PROJECT D-7-135 | DATE: 01/27/2020 | REVISION NO.

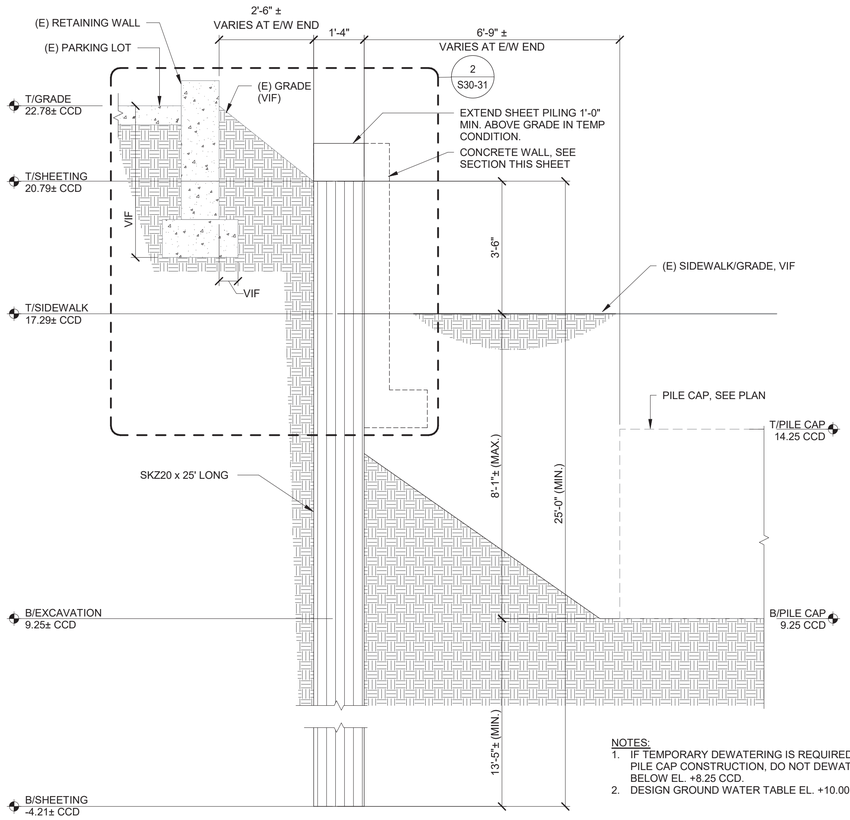

NOTES:
1. IF TEMPORARY DEWATERING IS REQUIRED FOR PILE CAP CONSTRUCTION, DO NOT DEWATER BELOW EL. +8.25 CCD.
2. DESIGN GROUND WATER TABLE EL. +10.00 CCD.

1 SHEET PILE ERS SECTION (TEMPORARY CONDITION)
1/2" = 1'-0"

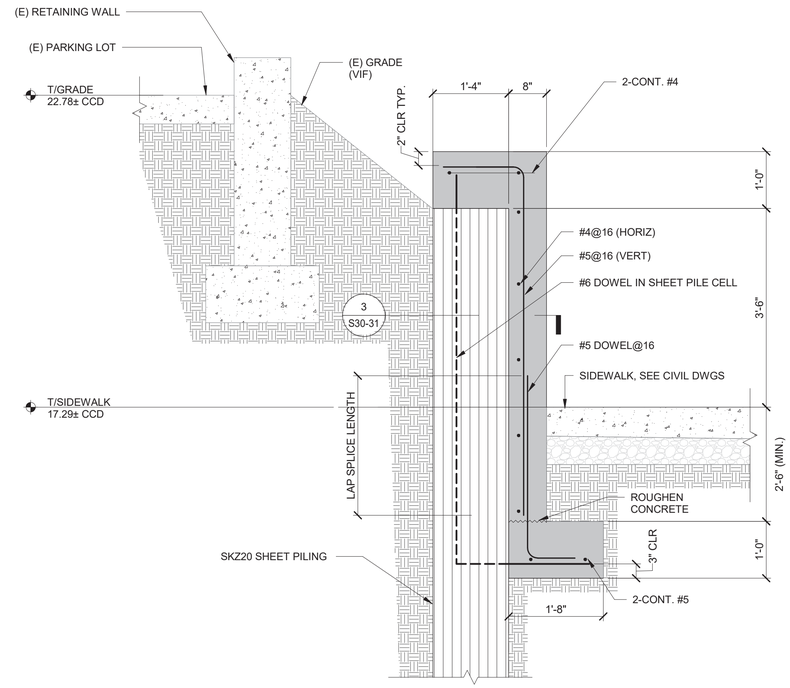

2 WALL SECTION (FINAL CONDITION)
3/4" = 1'-0"

NOTES

1. GENERAL
   A. ELEVATIONS SHOWN ARE WITH RESPECT TO THE CHICAGO CITY DATUM (CCD) AT STATION 34+00 AS SHOWN IN THE LAKE STREET IMPROVEMENT DRAWINGS (CDOT PROJECT NO. B-4-118) SHEET C-3.
   B. VERIFY EXISTING CONDITIONS AND ELEVATIONS IN THE FIELD.
   C. COORDINATE RETAINING WALL EXTENTS AND ELEVATIONS WITH CIVIL DRAWINGS.
   D. CALL DIGGER AT 312.744.7000 48 HOURS BEFORE STARTING WORK AND LOCATE ALL UTILITIES. RELOCATE UTILITIES AS REQUIRED. COORDINATE WITH CIVIL DRAWINGS.

2. MATERIAL PROPERTIES
   A. SHEETING:
      a. ASTM A572 GRADE 50 (F_y = 50 ksi)
      b. SKZ-20 BY NUCOR SKYLINE OR APPROVED EQUAL.
         - S_x = 31.69 in^3
         - I_x = 253.51 in^4
   B. CONCRETE:
      a. SEE GENERAL NOTES S00-02 - RETAINING WALLS
   C. STEEL REINFORCEMENT:
      a. EPOXY-COATED STEEL REINFORCEMENT ASTM A775

3. CONSTRUCTION SEQUENCE
   A. LOCATE ALL UTILITIES AND RELOCATE AS REQUIRED.
   B. DEMO EXISTING SIDEWALK AT NEW RETAINING WALL LOCATION
   C. INSTALL SHEETING TO ELEVATION SHOWN.
   D. EXCAVATE SITE TO +9.25± CCD FOR NEW PILE CAP INSTALLATION.
   E. BACKFILL WITH APPROVED MATERIALS TO BOTTOM OF NEW RETAINING WALL.
   F. INSTALL NEW RETAINING WALL.
   G. BACKFILL AND INSTALL NEW SIDEWALK. SEE CIVIL DRAWINGS FOR ADDITIONAL INFORMATION INCLUDING SUBGRADE PREPARATION.

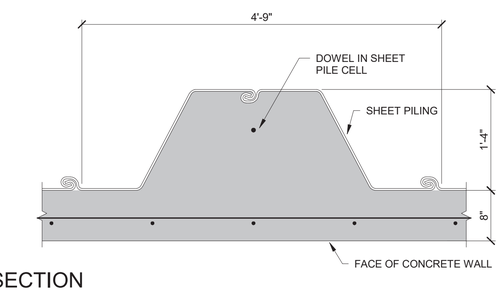

3 SECTION
1" = 1'-0"

DESIGN BY:									
DRAWN BY:									
CHECKED BY:									
APPROVED BY:			01/27/2020	ISSUE FOR BID	CJB	MW	TRM		
CDOT/APPROVED BY:		NO.	DATE	REVISIONS	DES.	DRW.	CHK.	DCCO	CDOT

SIMPSON GUMPERTZ & HEGER
Engineering of Structures and Building Enclosures
Simpson Gumpertz & Heger Inc.
135 South LaSalle Street, Suite 3800
Chicago, Illinois 60603
main: 312.754.7500 fax: 312.754.7501
www.sgh.com

PERKINS+WILL
The Wrigley Building
410 North Michigan Ave.
Suite 1600
Chicago, IL 60611
t 312.755.0770
f 312.755.0775
www.perkinswill.com

CDOT
CHICAGO DEPARTMENT OF TRANSPORTATION
DIVISION OF ENGINEERING

154 N DAMEN AVE - DAMEN GREEN LINE STATION

SITE RETAINING WALL SECTIONS & DETAILS

CDOT PROJECT D-7-135 | DATE: 01/27/2020

SPEC. NO.

DRAWING NO. S30-31

REVISION NO.

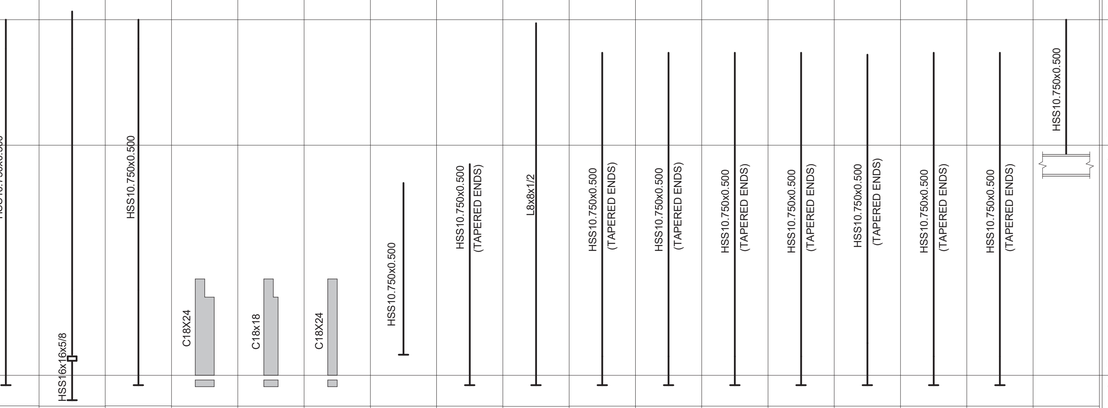

BOTTOM OF BASE PLATE ELEVATION	19'-6 3/4"	34'-10 3/8"	34'-10 3/8"	31'-1 3/4"	16'-4 1/4"	16'-4 1/4"	14'-9 1/4"	16'-4 1/4"	14'-9 1/4"	16'-4 1/4"				19'-6 3/4"	16'-4 1/4"	16'-4 1/4"	16'-4 1/4"	16'-4 1/4"	16'-4 1/4"	16'-4 1/4"	16'-4 1/4"	16'-4 1/4"	16'-4 1/4"	40'-9 3/8"
BASE PLATE TYPE	B10	B10	B10	B10	B10	B10	B11	B10	B11	B10				BP10	B10	B12	B10	B10	B10	B10	B10	B10	B10	
BASE PLATE THICKNESS	2"	1"	1"	1"	1"	1"	1"	1"	1"	1"				2"	1"	1"	1"	1"	1"	1"	1"	1"	1"	
PIER/PILASTER TYPE	P5													P5										
NOTES																								
Column Locations	s1-sB	s1-sE	s1-sG	s1-sH	s1-sJ	s1-sK	s1-sL	s1-sM	s1-sN	s1-sP	s3.5-sE.5	s3.5-sG.5	s3.5-sH.5	s5-sB	s5-sD(-1'-4")	s5(1'-5 13/16")-sG.5(9 5/16")	s5-sH	s5-sJ	s5-sK	s5-sL	s5-sM	s5-sN	s5-sP	s6-sB

BASE PLATE SCHEDULE

MARK	PLATE SIZE		ANCHOR ROD			SHEAR LUG	COMMENTS
	A	B	#	SIZE	EMBED.		
BP10	15"	15"	4	3/4"Ø	12"	NA	TYPE A
BP11	20"	20"	4	3/4"Ø	12"	NA	TYPE A
BP12	13"	13"	4	3/4"Ø	12"	NA	TYPE B

NOTES:
1. SEE COLUMN SCHEDULE FOR BASE PLATE THICKNESS.
2. BASE PLATE ANCHOR ROD HOLE Ø = ANCHOR ROD Ø + 5/16".
3. COLUMN CENTERED ON BASE PLATE, UON.
4. PROVIDE LEVELING NUTS AND SHIM PACKS AS REQUIRED TO MAINTAIN COLUMN LEVELNESS.
5. WASHER PLATES ASTM A572.
6. MATCH SURFACE PREPARATION AND FINISH OF BEARING PLATE, ANCHOR RODS, WASHERS, AND WASHER PLATES TO THAT OF COLUMNS.
7. COORDINATE BOTTOM OF BASE PLATE ELEVATIONS WITH FINAL GRADE ELEVATIONS AND PIER PROJECTION ABOVE GRADE
8. PROVIDE 1-1/2" MIN. GROUT BED BELOW BASE PLATE, UON.

1 BASE PLATE SCHEDULE
1 1/2" = 1'-0"

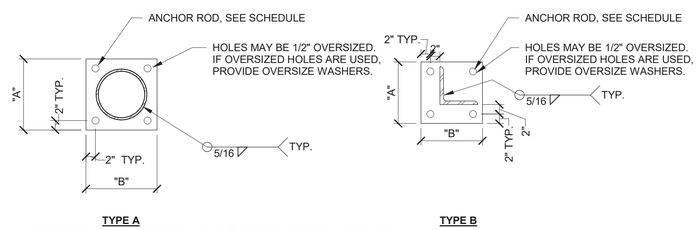

2 STEEL COLUMN BASE PLATE - PLAN
3/4" = 1'-0"

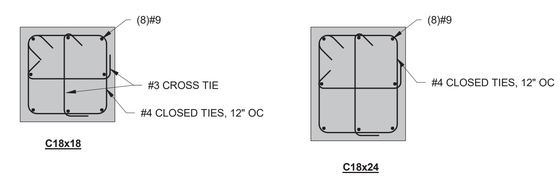

3 SECTION
3/4" = 1'-0"

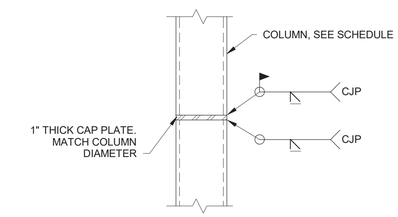

4 COLUMN SPLICE
3/4" = 1'-0"

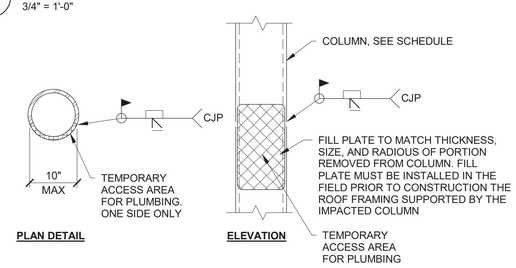

5 COLUMN PLUMBING ACCESS PANEL
3/4" = 1'-0"

DESIGN BY:									
DRAWN BY:									
CHECKED BY:									
APPROVED BY:			01/27/2020	ISSUE FOR BID	EJT	MW	TRM		
CDOT/APPROVED BY:		NO.	DATE	REVISIONS	DES.	DRW.	CHK.	DCCO	CDOT

SIMPSON GUMPERTZ & HEGER
Engineering of Structures and Building Enclosures
Simpson Gumpertz & Heger Inc.
135 South LaSalle Street, Suite 3800
Chicago, Illinois 60603
main: 312.754.7500 fax: 312.754.7501
www.sgh.com

PERKINS+WILL
The Wrigley Building
410 North Michigan Ave.
Suite 1600
Chicago, IL 60611
t 312.755.0770
f 312.755.0775
www.perkinswill.com

CDOT
CHICAGO DEPARTMENT OF TRANSPORTATION
DIVISION OF ENGINEERING

154 N DAMEN AVE - DAMEN GREEN LINE STATION

STATION HOUSE COLUMN SCHEDULE

CDOT PROJECT D-7-135 | DATE: 01/27/2020

SPEC. NO.

DRAWING NO. **S40-10**

REVISION NO.

LEVEL 03								LEVEL 03
39'-1 5/8" LEVEL 02 STATION								39'-1 5/8" LEVEL 02 STATION
24'-3 5/8" LEVEL 2.11	W14x193	W14x193	W14x193	W14x193	W14x193	W14x193		24'-3 5/8" LEVEL 2.11
13'-1 3/4" LEVEL 01							HSS14X10X5/8	13'-1 3/4" LEVEL 01
0"								0"
BOTTOM OF BASE PLATE ELEVATION	19'-6 3/4"	19'-6 3/4"	19'-6 3/4"	19'-6 3/4"	19'-6 3/4"	19'-6 3/4"	19'-6 3/4"	
BASE PLATE TYPE	BP-20	BP-20	BP-20	BP-20	BP-20	BP-20	BP-22	
BASE PLATE THICKNESS	1 1/2"	1 1/2"	1 1/2"	1 1/2"	1 1/2"	1 1/2"	2"	
PIER/PILASTER TYPE	P2	P2	P2	P2	P2	P2	P5	
NOTES								
Column Locations	b2-bC	b2-bD	b3-bC	b3-bD	b4-bC	b4-bD	b9(-4'-1 3/8")-bC	

NOTES:
1. TRUSS VERTICALS NOT SHOWN. SEE TRUSS ELEVATION.
2. PROVIDE 5/16" CAP PL ON ALL COLUMNS UON IN SECTIONS/DETAILS.

BASE PLATE SCHEDULE

MARK	PLATE SIZE		ANCHOR ROD			SHEAR LUG	COMMENTS
	A	B	#	SIZE	D		
BP-20	36"	72"	8	7/8"Ø	14"	(2)1/2"X3"X12"	(2)1/2"X3"X12"
BP-21	16"	16"	4	7/8"Ø	3/S30-05	NONE	
BP-22	22"	22"	8	7/8"Ø		NONE	EXTEND ANCHOR TO BOT. OF PILE CAP

NOTES:
1. SEE COLUMN SCHEDULE FOR BASE PLATE THICKNESS.
2. BASE PLATE ANCHOR ROD HOLE Ø = ANCHOR ROD Ø + 5/16".
3. COLUMN CENTERED ON BASE PLATE, UON.
4. PROVIDE LEVELING NUTS AND SHIM PACKS AS REQUIRED TO MAINTAIN COLUMN LEVELNESS.
5. WASHER PLATES ASTM A572.
6. MATCH SURFACE PREPARATION AND FINISH OF BEARING PLATE, ANCHOR RODS, WASHERS, AND WASHER PLATES TO THAT OF COLUMNS.
7. COORDINATE BOTTOM OF BASE PLATE ELEVATIONS WITH FINAL GRADE ELEVATIONS AND PIER PROJECTION ABOVE GRADE
8. PROVIDE 1-1/2" MIN. GROUT BED BELOW BASE PLATE, UON.

1 BASE PLATE SCHEDULE
1 1/2" = 1'-0"

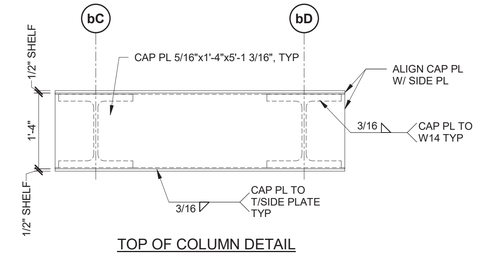

TOP OF COLUMN DETAIL

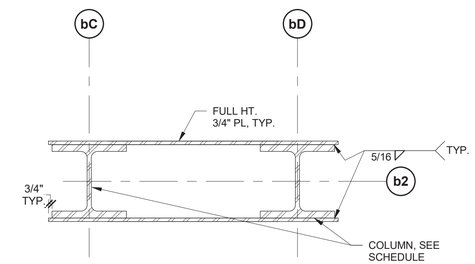

TYPICAL DETAIL

2 BUILT-UP COLUMN DETAIL
3/4" = 1'-0"

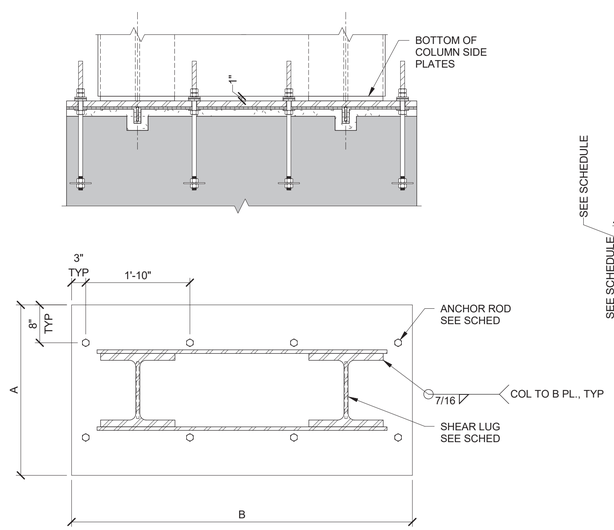

3 BASE PLATE TYPE 20
3/4" = 1'-0"

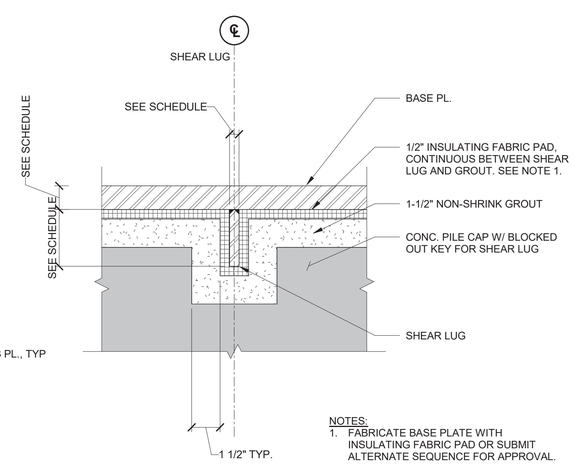

NOTES:
1. FABRICATE BASE PLATE WITH INSULATING FABRIC PAD OR SUBMIT ALTERNATE SEQUENCE FOR APPROVAL.
2. MAINTAIN GROUT HOLES THROUGH INSULATING FABRIC PAD.

4 SHEAR LUG DETAIL - TOWER/BRIDGE
3" = 1'-0"

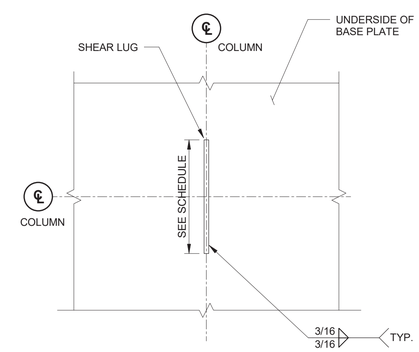

5 SHEAR LUG PLAN - TOWER/BRIDGE
1 1/2" = 1'-0"

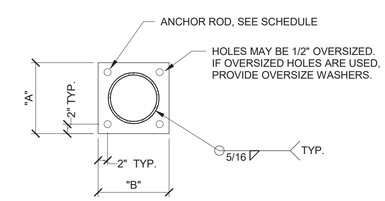

TYPE A

6 BASE PLATE TYPE 21
3/4" = 1'-0"

DESIGN BY:									
DRAWN BY:									
CHECKED BY:									
APPROVED BY:			01/27/2020	ISSUE FOR BID	EJT	MW	TRM		
CDOT/APPROVED BY:		NO.	DATE	REVISIONS	DES.	DRW.	CHK.	DCCO	CDOT

SIMPSON GUMPERTZ & HEGER
Engineering of Structures and Building Enclosures
Simpson Gumpertz & Heger Inc.
135 South LaSalle Street, Suite 3800
Chicago, Illinois 60603
main: 312.754.7500 fax: 312.754.7501
www.sgh.com

PERKINS+WILL
The Wrigley Building
410 North Michigan Ave.
Suite 1600
Chicago, IL 60611
t 312.755.0770
f 312.755.0775
www.perkinswill.com

CDOT
CHICAGO DEPARTMENT OF TRANSPORTATION
DIVISION OF ENGINEERING

154 N DAMEN AVE - DAMEN GREEN LINE STATION

TOWER/BRIDGE COLUMN SCHEDULE

CDOT PROJECT D-7-135 | DATE: 01/27/2020

SPEC. NO.

DRAWING NO. S40-20

REVISION NO.

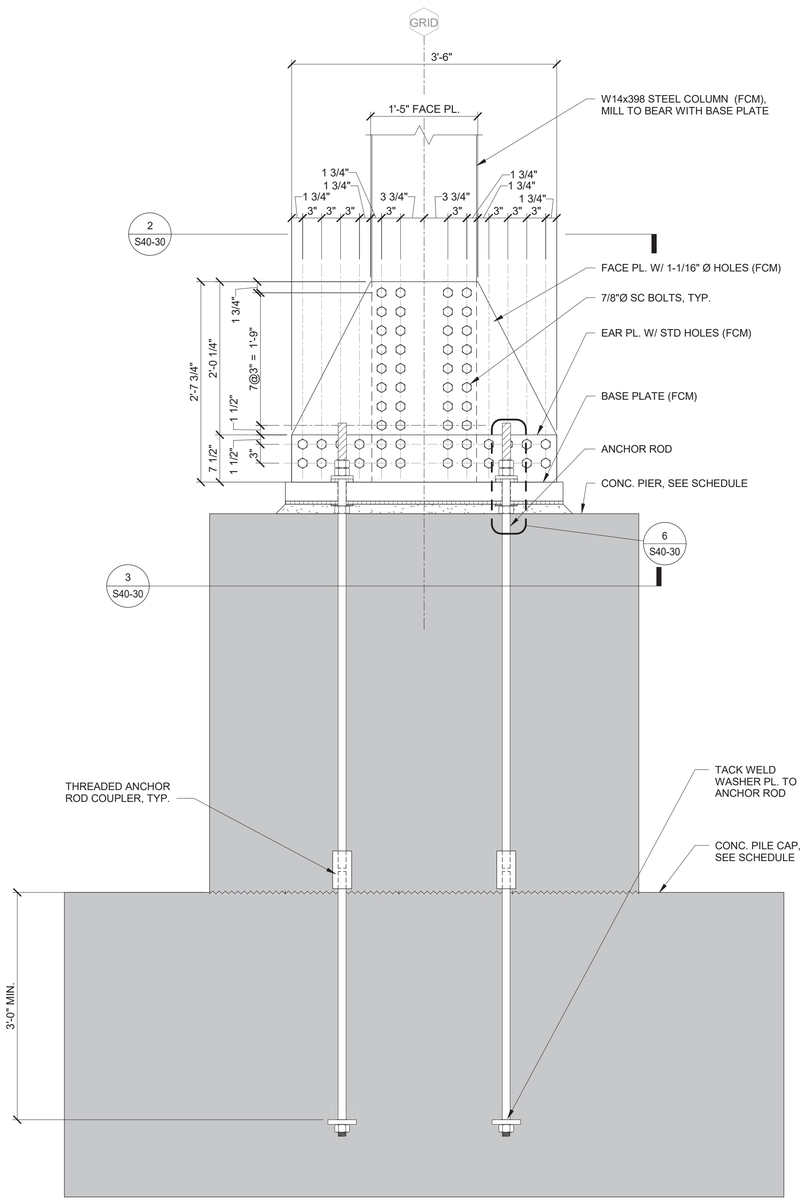

1 W14x398 COLUMN BASE PLATE ELEVATION
1" = 1'-0"

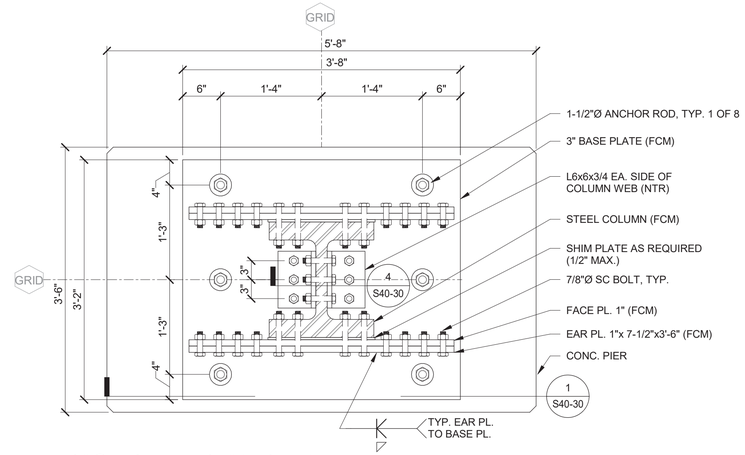

2 BASE PLATE PLAN DETAIL
1" = 1'-0"

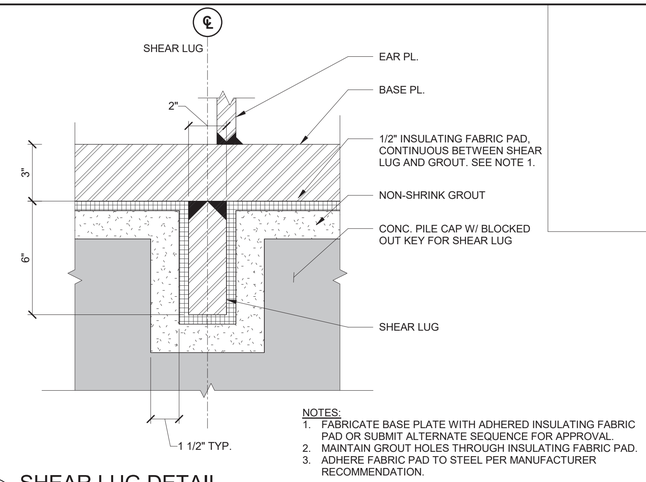

NOTES:
1. FABRICATE BASE PLATE WITH ADHERED INSULATING FABRIC PAD OR SUBMIT ALTERNATE SEQUENCE FOR APPROVAL.
2. MAINTAIN GROUT HOLES THROUGH INSULATING FABRIC PAD.
3. ADHERE FABRIC PAD TO STEEL PER MANUFACTURER RECOMMENDATION.

5 SHEAR LUG DETAIL
3" = 1'-0"

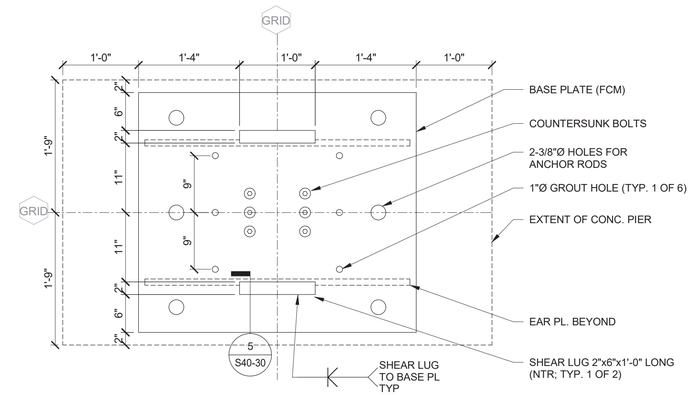

3 BASE PLATE DETAIL - UNDERSIDE
1" = 1'-0"

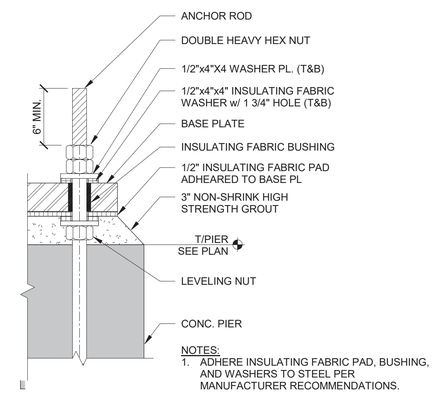

NOTES:
1. ADHERE INSULATING FABRIC PAD, BUSHING, AND WASHERS TO STEEL PER MANUFACTURER RECOMMENDATIONS.

6 TYPICAL ANCHOR ROD INSULATION
1 1/2" = 1'-0"

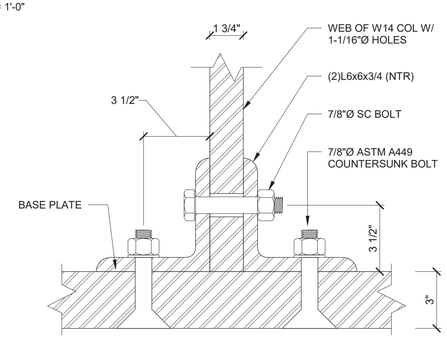

4 BASE PLATE DETAIL
3" = 1'-0"

DESIGN BY:									
DRAWN BY:									
CHECKED BY:									
APPROVED BY:			01/27/2020	ISSUE FOR BID	CJB	MW	TRM		
CDOT/APPROVED BY:		NO.	DATE	REVISIONS	DES.	DRW.	CHK.	DCCO	CDOT

SIMPSON GUMPERTZ & HEGER
Engineering of Structures and Building Enclosures
Simpson Gumpertz & Heger Inc.
135 South LaSalle Street, Suite 3800
Chicago, Illinois 60603
main: 312.754.7500 fax: 312.754.7501
www.sgh.com

PERKINS+WILL
The Wrigley Building
410 North Michigan Ave.
Suite 1600
Chicago, IL 60611
t 312.755.0770
f 312.755.0775
www.perkinswill.com

CDOT
CHICAGO DEPARTMENT OF TRANSPORTATION
DIVISION OF ENGINEERING

154 N DAMEN AVE - DAMEN GREEN LINE STATION

PLATFORM COLUMN DETAILS

CDOT PROJECT D-7-135 | DATE: 01/27/2020

SPEC. NO.

DRAWING NO. S40-30

REVISION NO.

MINIMUM SIZE OF FILLET WELDS	
MATERIAL THICKNESS OF THICKER PART JOINED (IN)	MINIMUM SIZE OF FILLET WELD[1] (IN)
TO 1/4 INCLUSIVE	1/8
OVER 1/4 TO 1/2	3/16
OVER 1/2 TO 3/4	1/4
OVER 3/4	5/16

NOTES:
1. LEG DIMENSION OF FILLET WELDS. SINGLE-PASS WELDS MUST BE USED.
2. MINIMUM LENGTH OF A FILLET WELD SHALL NOT BE LESS THAN 4 TIMES IT SIZE.
3. WHERE FILLET WELDS ARE INDICATED IN THE STRUCTURAL DRAWINGS AND THE SIZE IS NOT EXPLICITLY INDICATED, PROVIDE THE MINIMUM SIZE AS INDICATED IN THE TABLE ABOVE.

1 WELD TABLE - MINIMUM SIZE OF FILLET WELDS
3/4" = 1'-0"

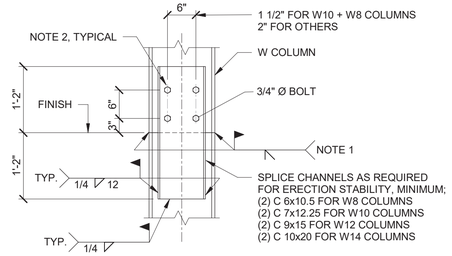

NOTES:
1. MINIMUM EFFECTIVE WELD SIZE:
   a. 1/4" FOR FLANGES UP TO 1/2" THICK
   b. 3/8" FOR FLANGES UP TO 3/4" THICK
   c. 1/2" FOR FLANGES UP TO 1 1/2" THICK
   d. 5/8" FOR THICKER FLANGES
2. MINIMUM 3/4" Ø A325 BOLTS, SNUG TIGHT.
3. CHANNELS BOLTED BELOW SPLICE ACCEPTABLE ALTERNATE.

2 TYPICAL GRAVITY COLUMN SPLICE
3/4" = 1'-0"

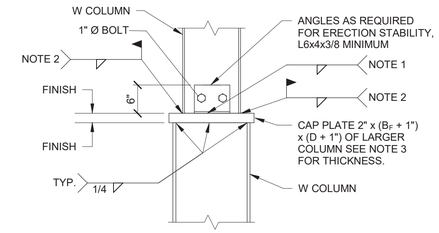

NOTES:
1. WELD ANGLE TO PLATE ON 3 SIDES. SIZE WELD AS REQUIRED FOR ERECTION STABILITY; 5/16" MINIMUM LEG SIZE.
2. WELD TO PLATE AS REQUIRED FOR ERECTION STABILITY MINIMUM WELD 5/16" THICK FOR FULL LENGTH OF COLUMN FLANGE.
3. FOR NOMINAL CHANGES IN DEPTH OF 2" OR LESS, THICKNESS = 2". FOR CHANGE IN NOMINAL DEPTH GREATER THAN 2", THICKNESS = 3".

3 GRAVITY COLUMN SPLICE W/ CHANGE IN NOMINAL DEPTH
3/4" = 1'-0"

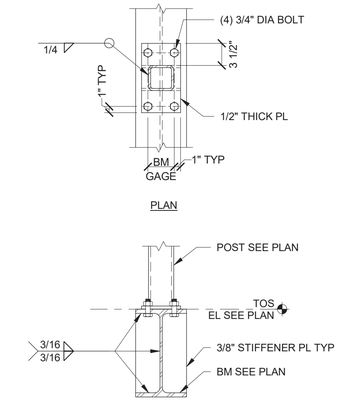

4 HSS POST ON BEAM DETAIL
1" = 1'-0"

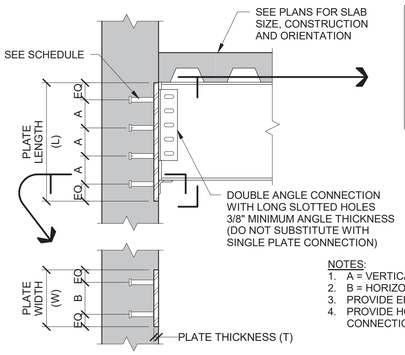

NOTES:
1. A = VERTICAL SPACING BETWEEN STUDS.
2. B = HORIZONTAL SPACING BETWEEN STUDS.
3. PROVIDE EP-1, UNLESS OTHERWISE NOTED.
4. PROVIDE HOLES IN EMBEDDED PLATE TO FACILITATE CONNECTION TO CONCRETE FORMWORK.

EMBEDDED PLATE SCHEDULE									
LABEL	PLATE (INCHES)			NUMBER OF STUDS	NUMBER OF ROWS	STUD INFORMATION	A (INCHES)	B (INCHES)	COMMENTS
	T	W	L						
EP-1	1	18	27	8	4	3/4"Ø x 8 3/16" Gr 55	7	8	NOTE 1
EP-2	1 1/4	12	20	12	6	#6 BAR	3	6	NOTE 2
EP-3	1	18	36	8	4	3/4"Ø x 8 3/16" Gr 55	9	6	
EP-4	1	8	12	6	3	3/4"Ø x 8 3/16" Gr 55	4	4	
EP-5	1	CONT.	15	12" OC	2	3/4"Ø x 8 3/16" Gr 55	NA	12" OC	
EP-6	1	12	22	8	4	3/4"Ø x 8 3/16" Gr 55	6	4	
EP-7	1	15	15	6	2	7/8"Ø x 8 3/16" Gr 55	12	6	

JMcD 2 3/19/2020 1

NOTES:
1. IN LOCATIONS DENOTED WITH A EP-1* OR EP-6*, SUPPLEMENT WALL REINFORCEMENT WITH ADDITIONAL #4 STIRRUPS @ 3" OC. SEE DETAIL 5A/S41-00
2. SEE DETAIL 7/S41-21 FOR DETAILS ON DEFORMED BAR ANCHORS ATTACHED TO EMBED PLATE. DEFORMED BAR ANCHORS TO AVOID SHEAR LUG. 1

5 CONCRETE EMBED PLATE
3/4" = 1'-0"

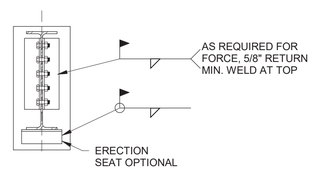

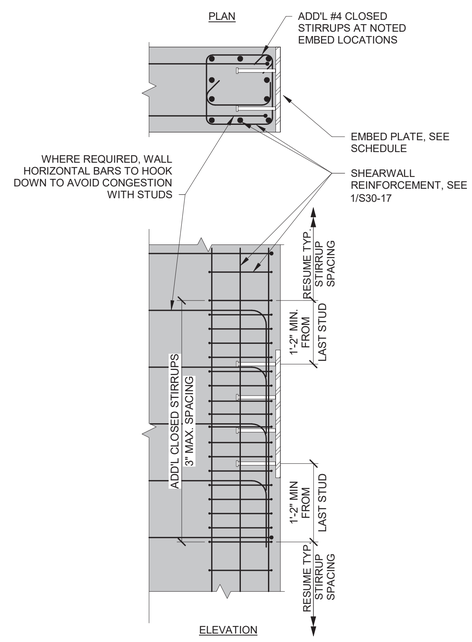

5A SECTION
3/4" = 1'-0"

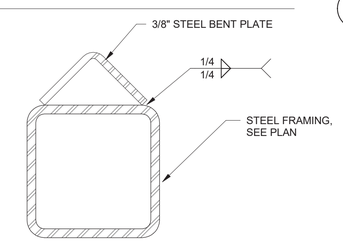

NOTES:
1. ALL STEEL FRAMING CREATING A FLAT SURFACE WITHIN THE ELEVATOR SHAFT SHALL HAVE A BENT PLATE AS SHOWN WELDED TO THE TOP OF MEMBER

6 STEEL FRAMING IN ELEVATOR SHAFT
3" = 1'-0"

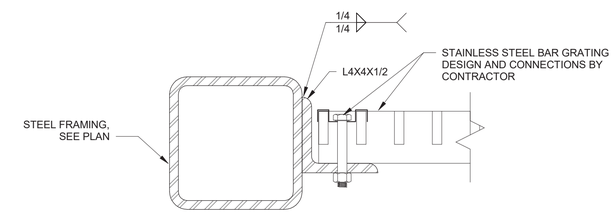

NOTES:
1. AT SIMILAR CONDITION AT CONCRETE WALL, USE 1/2" DIA. STAINLESS STEEL EXPANSION ANCHOR SPACED @ 12" OC.

7 STAINLESS STEEL BAR GRATING AT ELEVATOR SHAFT
3" = 1'-0"

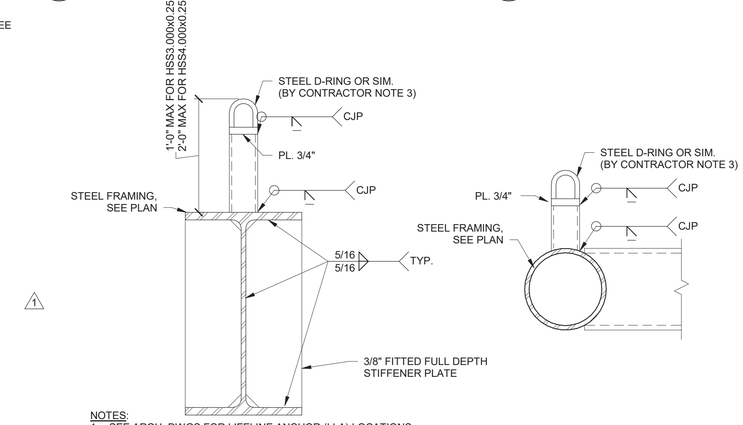

NOTES:
1. SEE ARCH. DWGS FOR LIFELINE ANCHOR (LLA) LOCATIONS.
2. LIFELINE ANCHOR SUPPORT DESIGNED FOR 5 KIP ULTIMATE LOAD IN ANY DIRECTION FOR EXTENSION SHOWN IN THE DETAIL.
3. CONTRACTOR TO PROVIDE D-RING AND ATTACHMENT TO CAP PLATE CAPABLE OF WITHSTANDING 5 KIP ULTIMATE LOAD IN ANY DIRECTION.
4. WIDE FLANGE SUPPORTING BEAM SHOWN. SIMILAR AT HSS SUPPORTING BEAM

8 LIFE LINE ANCHOR SUPPORT DETAIL
1 1/2" = 1'-0"

DESIGN BY:									
DRAWN BY:									
CHECKED BY:									
APPROVED BY:			03/18/2020	BUILDING PERMIT CORRECTIONS 2	EJT	MW	TRM		
CDOT/APPROVED BY:		NO.	DATE	REVISIONS	DES.	DRW.	CHK.	DCCO	CDOT

STATE OF ILLINOIS TERRY R. McDONNELL 081-005[illegible] LICENSED STRUCTURAL ENGINEER Exp. 11/30/2020

SIMPSON GUMPERTZ & HEGER
Engineering of Structures and Building Enclosures
Simpson Gumpertz & Heger Inc.
135 South LaSalle Street, Suite 3800
Chicago, Illinois 60603
main: 312.754.7500 fax: 312.754.7501
www.sgh.com

PERKINS+WILL
The Wrigley Building
410 North Michigan Ave.
Suite 1600
Chicago, IL 60611
t 312.755.0770
f 312.755.0775
www.perkinswill.com

CDOT
CHICAGO DEPARTMENT OF TRANSPORTATION
DIVISION OF ENGINEERING

154 N DAMEN AVE - DAMEN GREEN LINE STATION

STEEL TYPICAL DETAILS

CDOT PROJECT D-7-135 | DATE: 01/27/2020

SPEC. NO.

DRAWING NO. **S41-00**

REVISION NO.

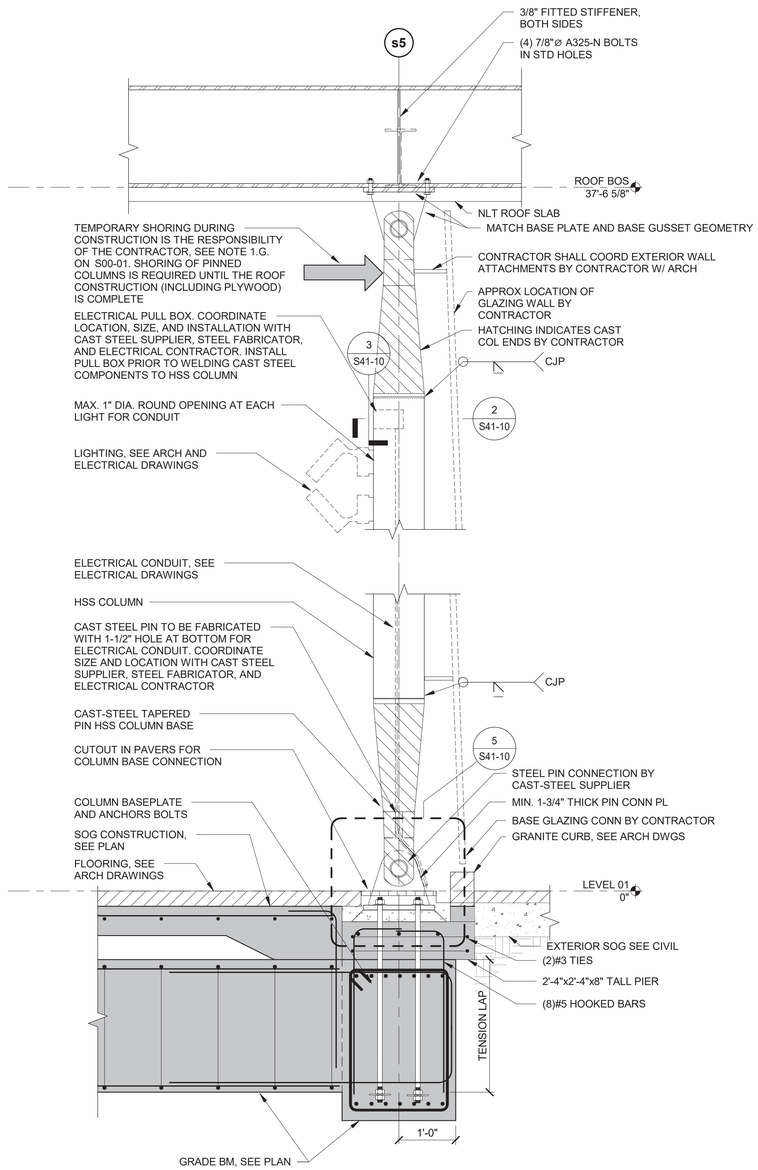

NOTES:
1. STEEL CASTINGS TO BE DESIGNED FOR FACTORED AXIAL LOADING OF 100 KIP AND FACTORED SHEAR LOAD OF 30 KIP.
2. INTERIOR ELECTRICAL SUPPORT PLATES SHALL BE COORDINATED BY THE CONTRACTOR, SEE ELECTRICAL.

1 SECTION
3/4" = 1'-0"

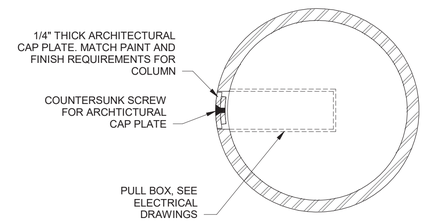

2 SECTION
3" = 1'-0"

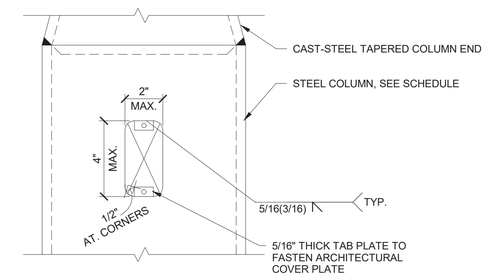

3 SECTION
3" = 1'-0"

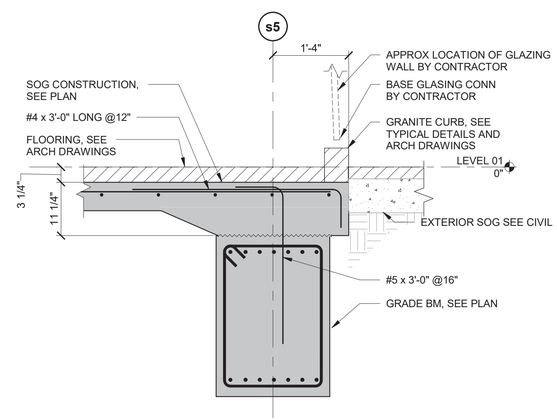

4 SECTION
3/4" = 1'-0"

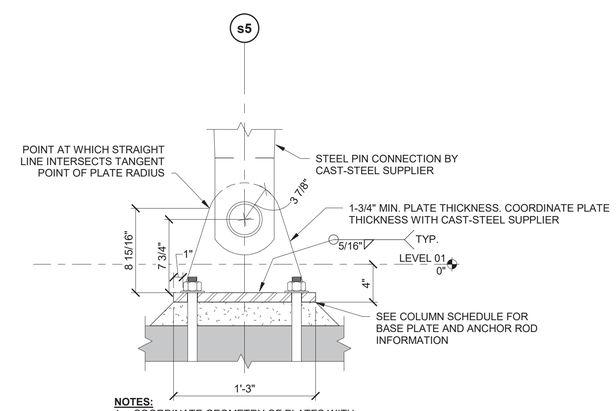

NOTES:
1. COORDINATE GEOMETRY OF PLATES WITH CAST-STEEL SUPPLIER

5 PIN COL CONNECTION
1 1/2" = 1'-0"

DESIGN BY:									
DRAWN BY:									
CHECKED BY:									
APPROVED BY:			01/27/2020	ISSUE FOR BID	EJT	MW	TRM		
CDOT/APPROVED BY:		NO.	DATE	REVISIONS	DES.	DRW.	CHK.	DCCO	CDOT

SIMPSON GUMPERTZ & HEGER
Engineering of Structures and Building Enclosures
Simpson Gumpertz & Heger Inc.
135 South LaSalle Street, Suite 3800
Chicago, Illinois 60603
main: 312.754.7500 fax: 312.754.7501
www.sgh.com

PERKINS+WILL
The Wrigley Building
410 North Michigan Ave.
Suite 1600
Chicago, IL 60611
t 312.755.0770
f 312.755.0775
www.perkinswill.com

CDOT
CHICAGO DEPARTMENT OF TRANSPORTATION
DIVISION OF ENGINEERING

154 N DAMEN AVE - DAMEN GREEN LINE STATION

STATION HOUSE SECTIONS AND DETAILS

CDOT PROJECT D-7-135 | DATE: 01/27/2020

SPEC. NO.

DRAWING NO. S41-10

REVISION NO.

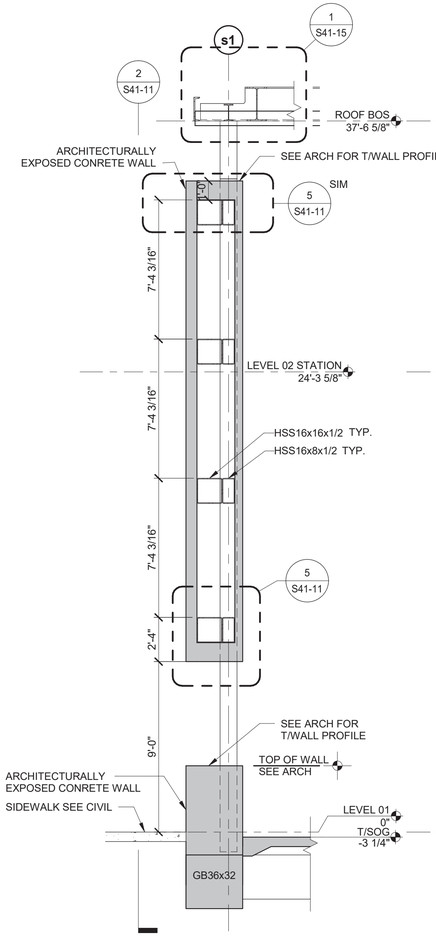

1 WEST WALL SECTION
1/4" = 1'-0"

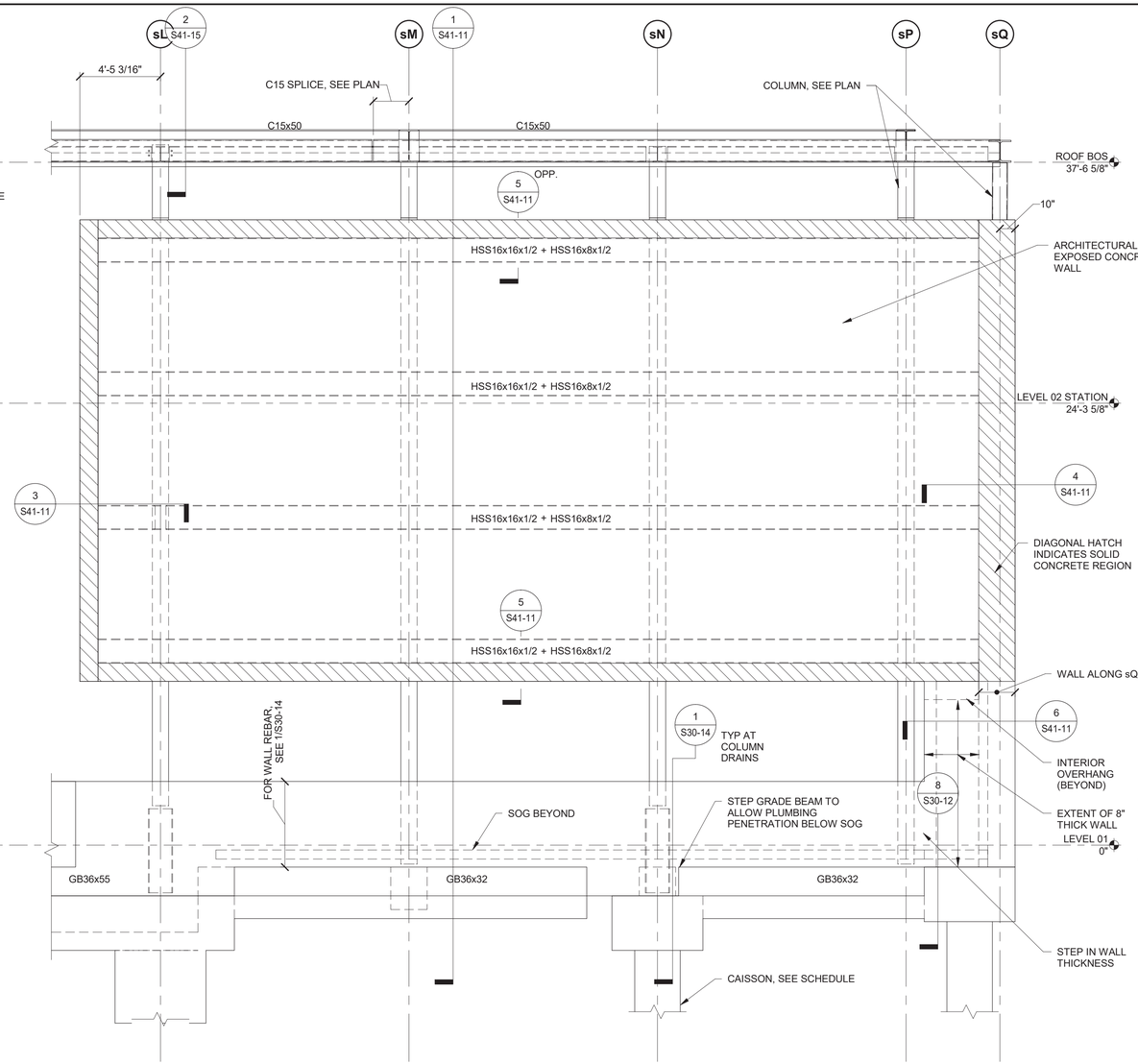

NOTES:
1. ALL STEEL WITHIN CONCRETE WALL TO BE HOT DIP GALVANIZED.
2. STEEL EXPOSED TO BE TO BE AESS. SEE SPECIFICATIONS AND S43 SERIES DRAWINGS FOR ADDITIONAL INFORMATION

2 WEST WALL ELEVATION
1/4" = 1'-0"

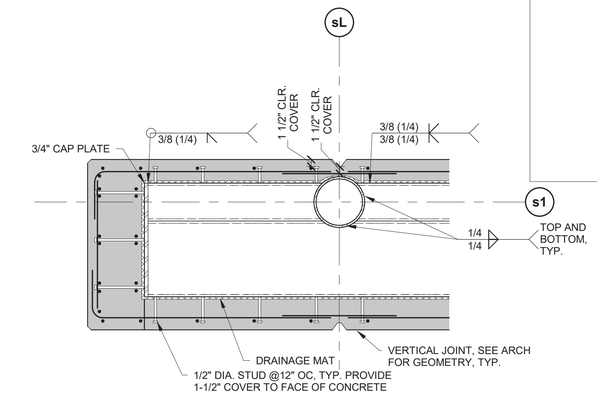

3 PLAN DETAIL - WEST WALL FRAMING
3/4" = 1'-0"

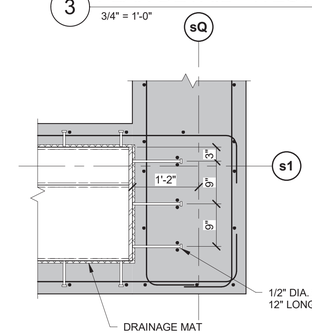

NOTES:
1. SEE DETAIL 3/S41-11 FOR BALANCE OF INFORMATION

4 PLAN DETAIL - WEST WALL
3/4" = 1'-0"

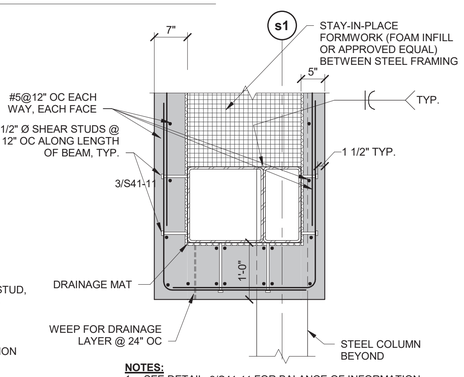

NOTES:
1. SEE DETAIL 3/S41-11 FOR BALANCE OF INFORMATION

5 SECTION - WEST WALL FRAMING
3/4" = 1'-0"

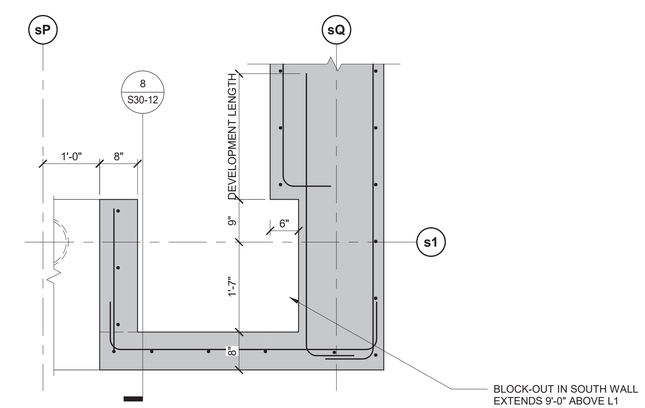

6 PLAN DETAIL - ELECTRICAL CLOSET
3/4" = 1'-0"

DESIGN BY:									
DRAWN BY:									
CHECKED BY:									
APPROVED BY:			01/27/2020	ISSUE FOR BID	EJT	MW	TRM		
CDOT/APPROVED BY:		NO.	DATE	REVISIONS	DES.	DRW.	CHK.	DCCO	CDOT

SIMPSON GUMPERTZ & HEGER
Engineering of Structures and Building Enclosures
Simpson Gumpertz & Heger Inc.
135 South LaSalle Street, Suite 3800
Chicago, Illinois 60603
main: 312.754.7500 fax: 312.754.7501
www.sgh.com

PERKINS+WILL
The Wrigley Building
410 North Michigan Ave.
Suite 1600
Chicago, IL 60611
t 312.755.0770
f 312.755.0775
www.perkinswill.com

CDOT
CHICAGO DEPARTMENT OF TRANSPORTATION
DIVISION OF ENGINEERING

154 N DAMEN AVE - DAMEN GREEN LINE STATION

STATION HOUSE SECTIONS AND DETAILS

CDOT PROJECT D-7-135 | DATE: 01/27/2020

SPEC. NO.

DRAWING NO. **S41-11**

REVISION NO.

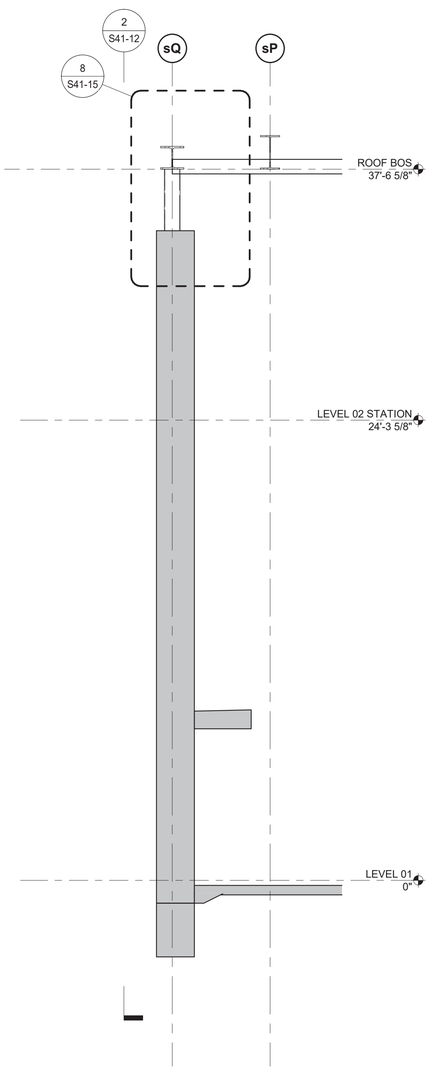

1 SOUTH WALL SECTION
1/4" = 1'-0"

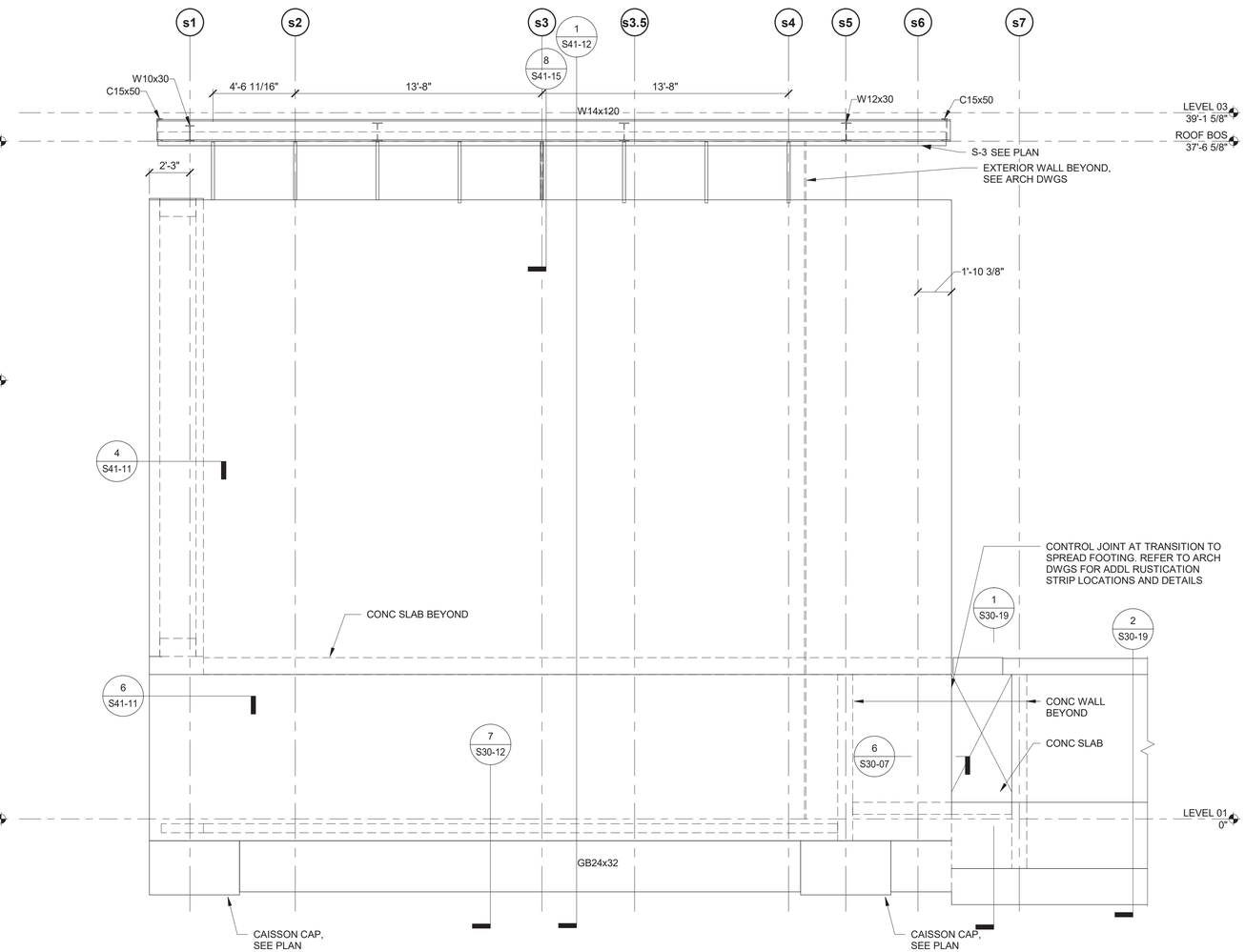

2 SOUTH WALL ELEVATION
1/4" = 1'-0"

DESIGN BY:									
DRAWN BY:									
CHECKED BY:									
APPROVED BY:			01/27/2020	ISSUE FOR BID	EJT	MW	TRM		
CDOT/APPROVED BY:		NO.	DATE	REVISIONS	DES.	DRW.	CHK.	DCCO	CDOT

SIMPSON GUMPERTZ & HEGER
Engineering of Structures and Building Enclosures
Simpson Gumpertz & Heger Inc.
135 South LaSalle Street, Suite 3800
Chicago, Illinois 60603
main: 312.754.7500 fax: 312.754.7501
www.sgh.com

PERKINS+WILL
The Wrigley Building
410 North Michigan Ave.
Suite 1600
Chicago, IL 60611
t 312.755.0770
f 312.755.0775
www.perkinswill.com

CDOT
CHICAGO DEPARTMENT OF TRANSPORTATION
DIVISION OF ENGINEERING

154 N DAMEN AVE - DAMEN GREEN LINE STATION

STATION HOUSE SECTIONS AND DETAILS

CDOT PROJECT D-7-135 | DATE: 01/27/2020

SPEC. NO.

DRAWING NO. **S41-12**

REVISION NO.

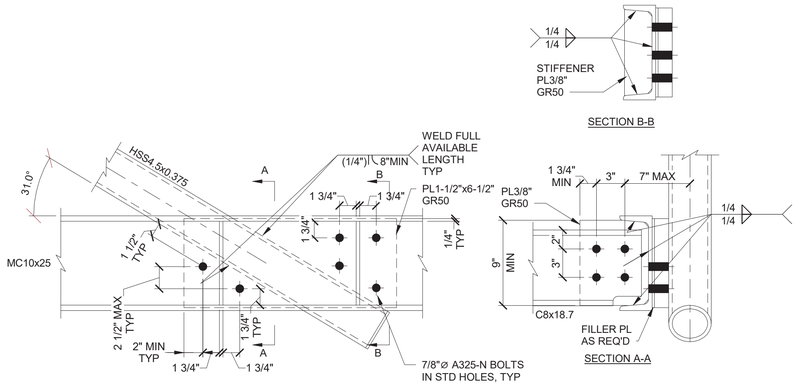

1 HIGH ROOF HANGER
1 1/2" = 1'-0"

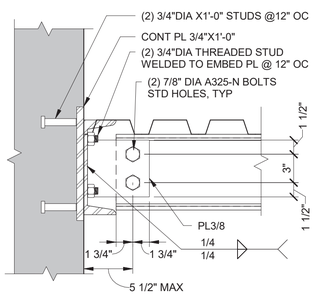

4 SECTION - HIGH ROOF TO CONCRETE WALL
1 1/2" = 1'-0"

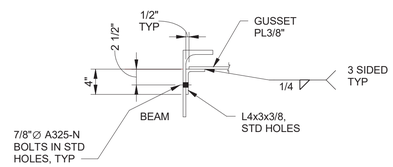

5A SECTION
1" = 1'-0"

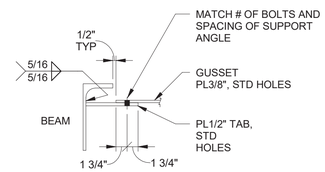

ALTERNATE IF BOLTS IN SUPPORT ANGLE
CAN NOT BE PLACED

5A' SECTION 5A ALTERNATE
1" = 1'-0"

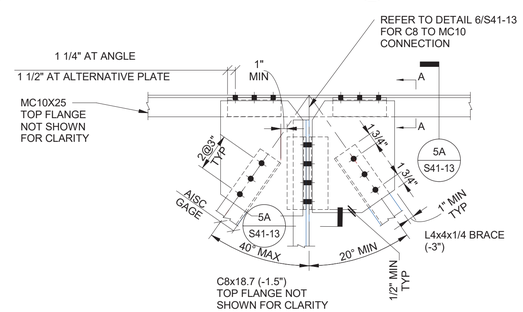

5 TYPICAL HIGH ROOF BRACING
1" = 1'-0"

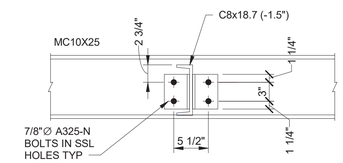

6A SECTION
1" = 1'-0"

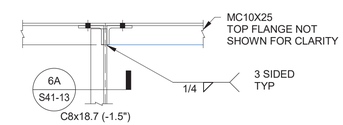

6 TYPICAL HIGH ROOF BEAM TO BEAM
1" = 1'-0"

DESIGN BY:									
DRAWN BY:									
CHECKED BY:									
APPROVED BY:			01/27/2020	ISSUE FOR BID	EJT	HMM	TRM		
CDOT/APPROVED BY:		NO.	DATE	REVISIONS	DES.	DRW.	CHK.	DCCO	CDOT

SIMPSON GUMPERTZ & HEGER
Engineering of Structures and Building Enclosures
Simpson Gumpertz & Heger Inc.
135 South LaSalle Street, Suite 3800
Chicago, Illinois 60603
main: 312.754.7500 fax: 312.754.7501
www.sgh.com

PERKINS+WILL
The Wrigley Building
410 North Michigan Ave.
Suite 1600
Chicago, IL 60611
t 312.755.0770
f 312.755.0775
www.perkinswill.com

CDOT
CHICAGO DEPARTMENT OF TRANSPORTATION
DIVISION OF ENGINEERING

154 N DAMEN AVE - DAMEN GREEN LINE STATION

STATION HOUSE SECTIONS AND DETAILS

CDOT PROJECT D-7-135 | DATE: 01/27/2020

SPEC. NO.

DRAWING NO. **S41-13**

REVISION NO.

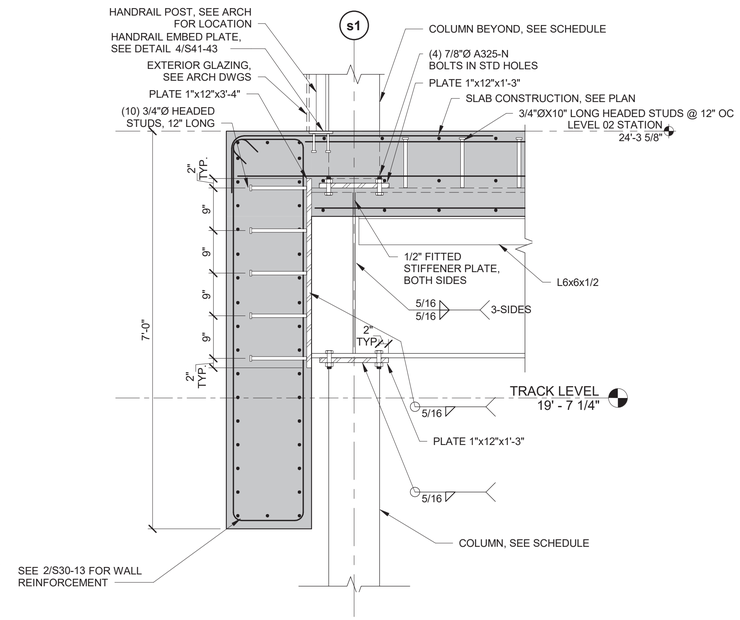

1 SECTION - NORTH WEST STATION CORNER
3/4" = 1'-0"

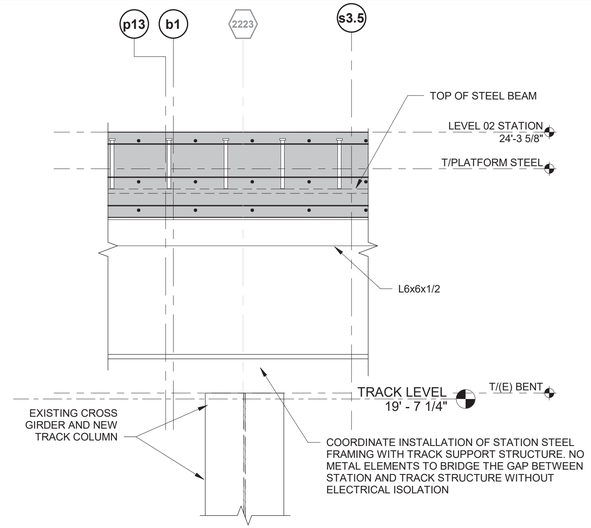

NOTES:
1. SEE DETAIL 1/S41-14 FOR BALANCE OF INFORMATION

2 SECTION - NORTH STATION SLAB DETAIL
3/4" = 1'-0"

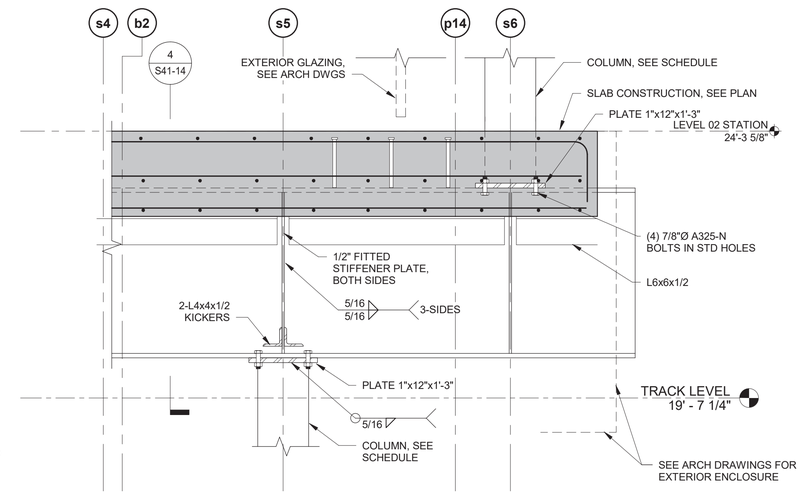

NOTES:
1. SEE DETAIL 1/S41-14 FOR BALANCE OF INFORMATION

3 SECTION - NORTH EAST STATION CORNER
3/4" = 1'-0"

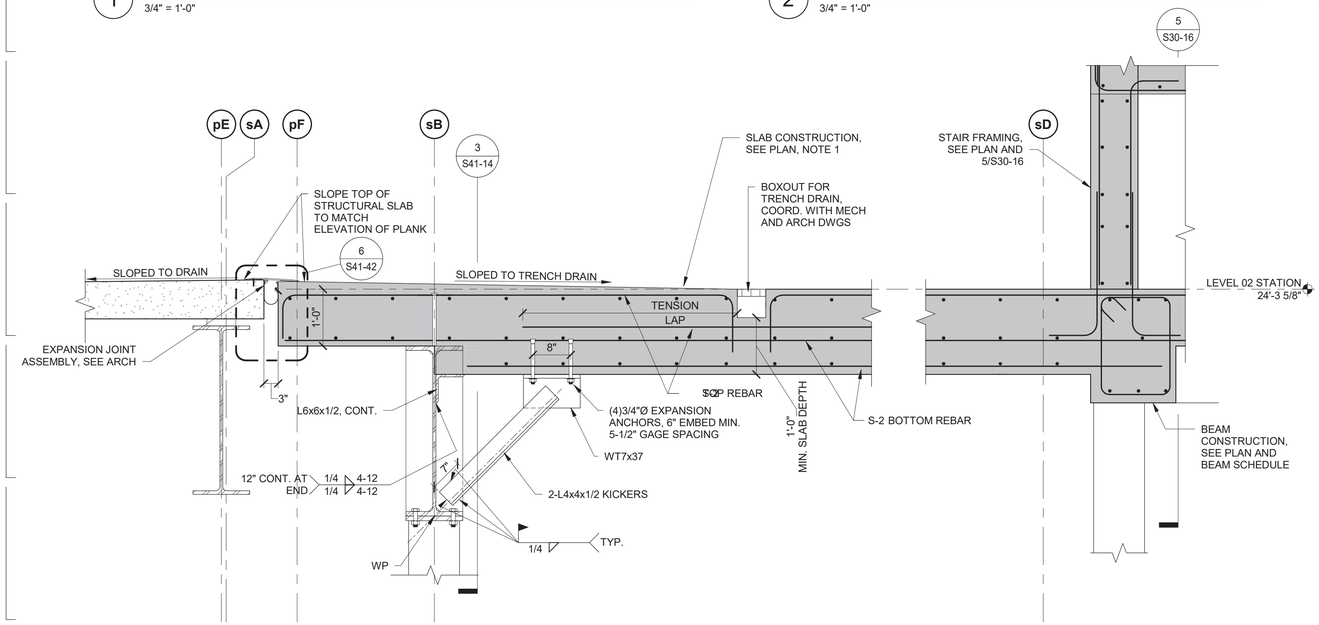

4 SECTION - STATION NORTH SLAB TO PLATFORM TRANSITION
3/4" = 1'-0"

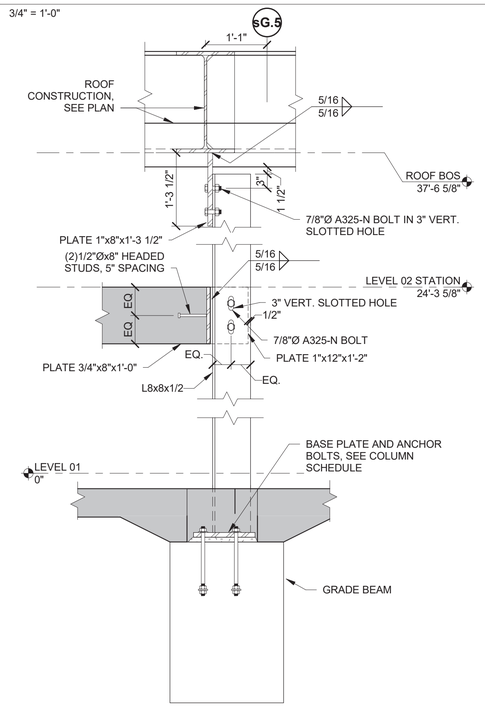

5 SECTION - EXTERIOR GLAZING CORNER SUPPORT
3/4" = 1'-0"

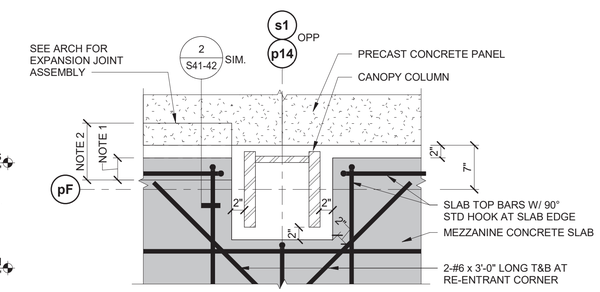

NOTES:
1. BLOCKOUT EDGE OF CONCRETE SLAB TO RECEIVE EXPANSION JOINT ASSEMBLY. COORDINATE DIMENSIONS WITH EXPANSION JOINT MANUFACTURER.
2. EXPANSION JOINT ASSEMBLY NOT SHOWN FOR CLARITY.

6 DETAIL - MEZZANINE TO PLATFORM SLAB
1" = 1'-0"

DESIGN BY:									
DRAWN BY:									
CHECKED BY:									
APPROVED BY:			01/27/2020	ISSUE FOR BID	EJT	HMM	TRM		
CDOT/APPROVED BY:		NO.	DATE	REVISIONS	DES.	DRW.	CHK.	DCCO	CDOT

SIMPSON GUMPERTZ & HEGER
Engineering of Structures and Building Enclosures
Simpson Gumpertz & Heger Inc.
135 South LaSalle Street, Suite 3800
Chicago, Illinois 60603
main: 312.754.7500 fax: 312.754.7501
www.sgh.com

PERKINS+WILL
The Wrigley Building
410 North Michigan Ave.
Suite 1600
Chicago, IL 60611
t 312.755.0770
f 312.755.0775
www.perkinswill.com

CDOT
CHICAGO DEPARTMENT OF TRANSPORTATION
DIVISION OF ENGINEERING

154 N DAMEN AVE - DAMEN GREEN LINE STATION

STATION HOUSE SECTIONS AND DETAILS

CDOT PROJECT D-7-135 | DATE: 01/27/2020

SPEC. NO.

DRAWING NO. **S41-14**

REVISION NO.

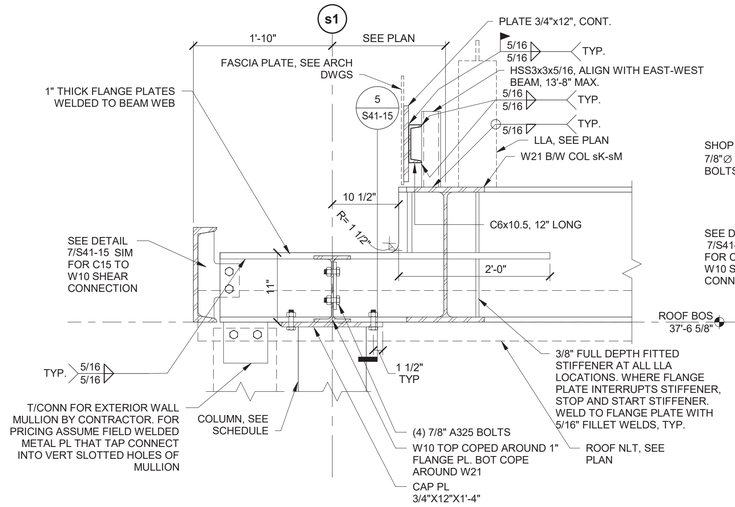

1 SECTION - STATION ROOF GUTTER (WEST)
1" = 1'-0"

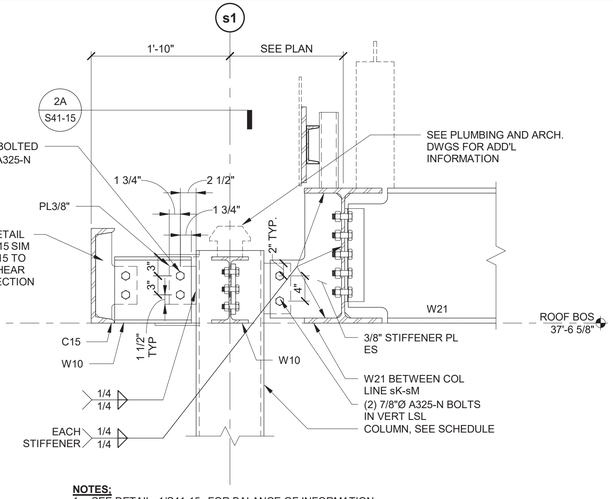

NOTES:
1. SEE DETAIL 1/S41-15 FOR BALANCE OF INFORMATION

2 SECTION - STATION ROOF DOWNSPOUT (WEST)
1" = 1'-0"

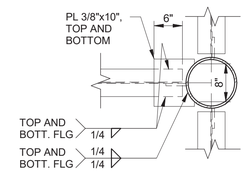

2A WELDED FLANGE PLATE CONNECTION
3/4" = 1'-0"

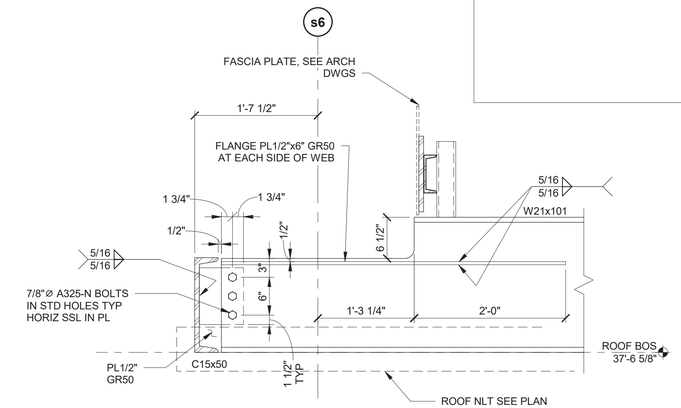

3 SECTION - STATION ROOF EDGE (SOUTH-EAST)
1" = 1'-0"

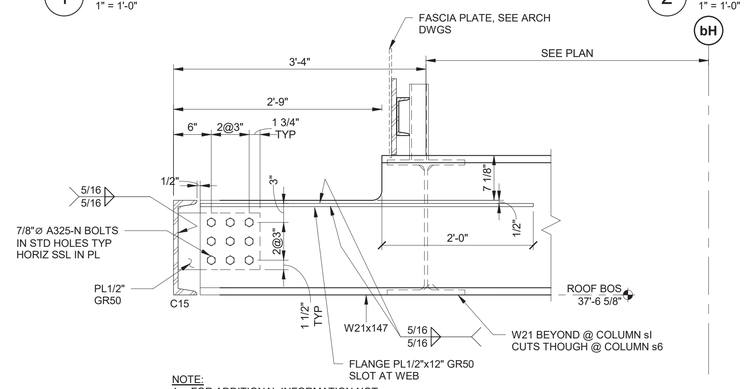

NOTE:
1. FOR ADDITIONAL INFORMATION NOT SHOWN SEE 1/S41-15 AND SHEET S42-10.

4 SECTION - STATION ROOF EDGE (NORTH)
1" = 1'-0"

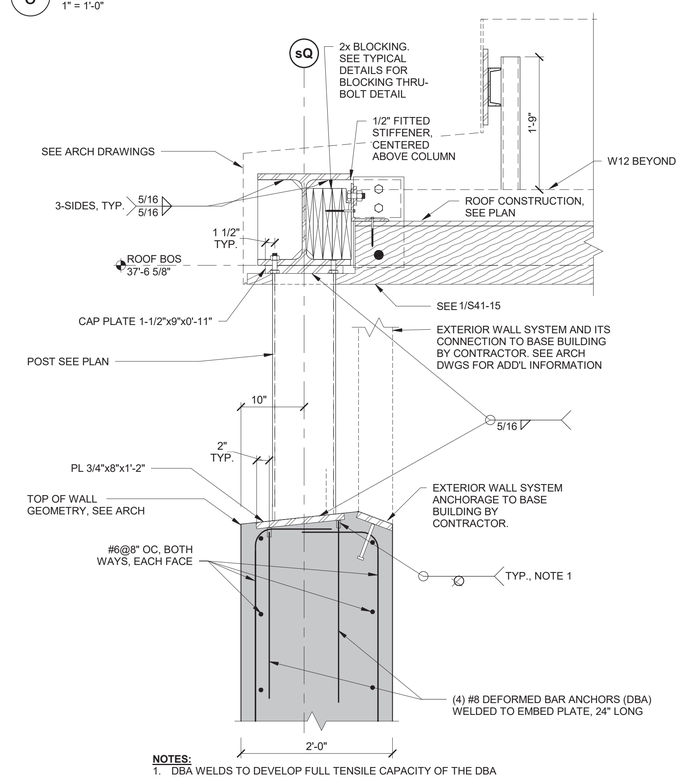

NOTES:
1. DBA WELDS TO DEVELOP FULL TENSILE CAPACITY OF THE DBA
2. SEE DETAIL 1/S41-15 FOR BALANCE OF INFORMATION

8 SECTION - STATION ROOF EDGE (SOUTH)
1" = 1'-0"

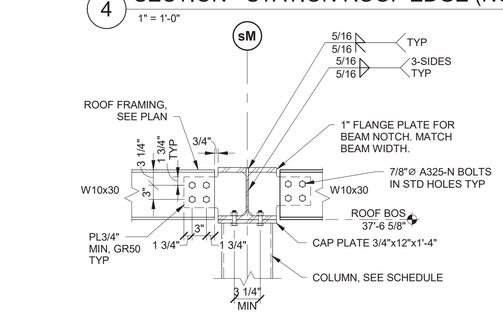

NOTES:
1. FOR ADDITIONAL INFORMATION NOT SHOWN SEE 1/S41-15 AND SHEET S42-10.

5 SECTION - STATION ROOF
3/4" = 1'-0"

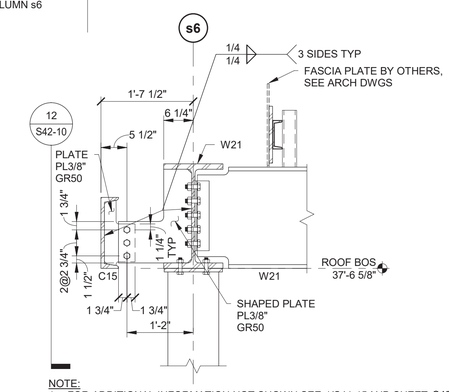

NOTE:
1. FOR ADDITIONAL INFORMATION NOT SHOWN SEE 1/S41-15 AND SHEET S42-10

6 SECTION - STATION ROOF EDGE (NORTH-EAST)
3/4" = 1'-0"

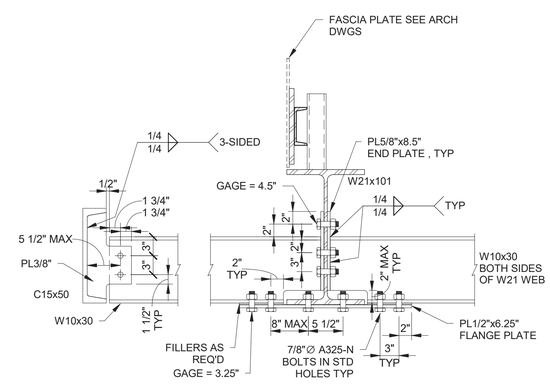

7 SECTION - STATION ROOF EDGE (NORTH)
1" = 1'-0"

DESIGN BY:									
DRAWN BY:									
CHECKED BY:									
APPROVED BY:			01/27/2020	ISSUE FOR BID	EJT	HMM	TRM		
CDOT/APPROVED BY:		NO.	DATE	REVISIONS	DES.	DRW.	CHK.	DCCO	CDOT

SIMPSON GUMPERTZ & HEGER
Engineering of Structures and Building Enclosures
Simpson Gumpertz & Heger Inc.
135 South LaSalle Street, Suite 3800
Chicago, Illinois 60603
main: 312.754.7500 fax: 312.754.7501
www.sgh.com

PERKINS+WILL
The Wrigley Building
410 North Michigan Ave.
Suite 1600
Chicago, IL 60611
t 312.755.0770
f 312.755.0775
www.perkinswill.com

CDOT
CHICAGO DEPARTMENT OF TRANSPORTATION
DIVISION OF ENGINEERING

154 N DAMEN AVE - DAMEN GREEN LINE STATION

STATION HOUSE SECTIONS AND DETAILS

SPEC. NO.

DRAWING NO. **S41-15**

CDOT PROJECT D-7-135 | DATE: 01/27/2020 | REVISION NO.

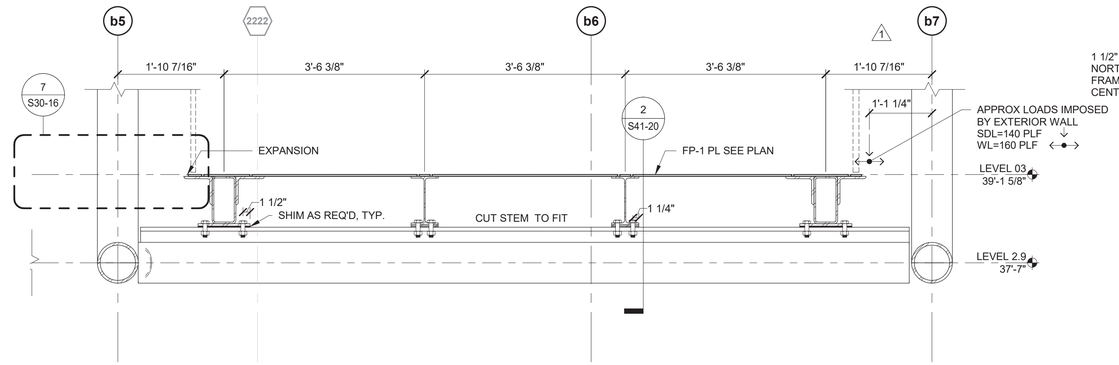

1 SECTION - BRIDGE FLOOR FRAMING
3/4" = 1'-0"

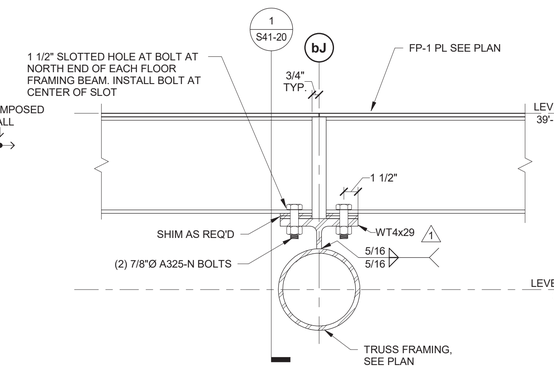

2 SECTION - BRIDGE FRAMING AT TYPICAL CONDITION
1 1/2" = 1'-0"

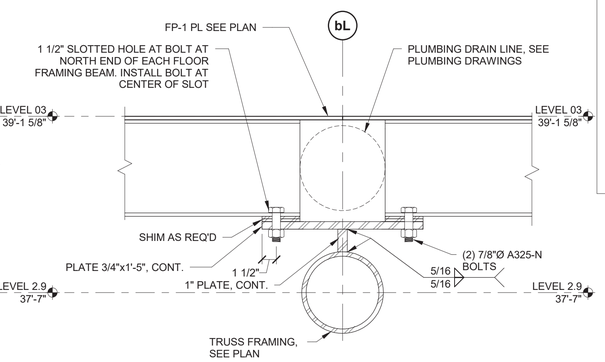

3 SECTION - BRIDGE FLOOR FRAMING AT DOWNSPOUT
1 1/2" = 1'-0"

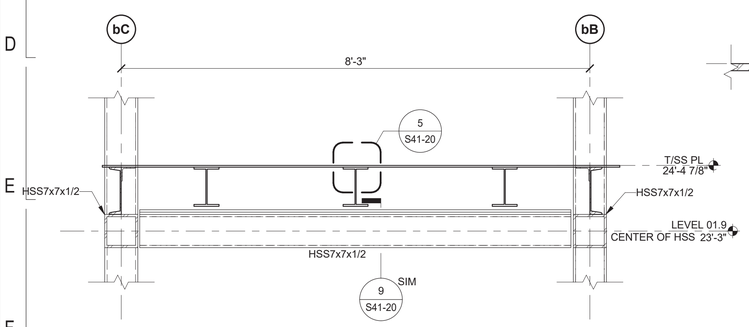

4 SECTION - BRIDGE FLOOR FRAMING
3/4" = 1'-0"

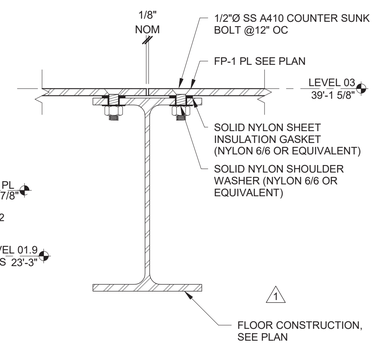

5 SECTION - FLOOR PLATE TO WF
3" = 1'-0"

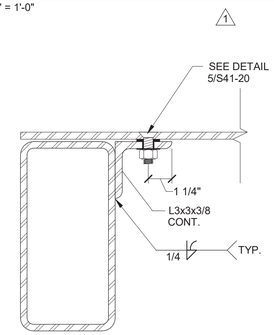

5A SECTION - FLOOR PLATE TO HSS
3" = 1'-0"

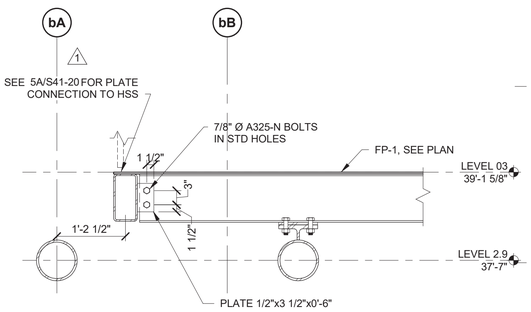

6 SECTION - NORTH END OF BRIDGE
3/4" = 1'-0"

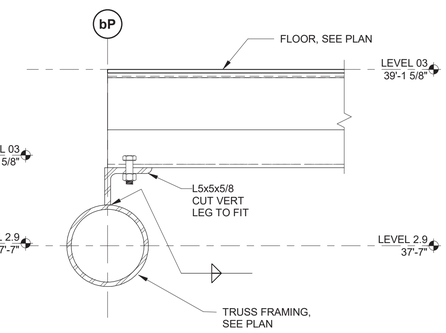

7 SECTION - BRIDGE FLOOR FRAMING
1 1/2" = 1'-0"

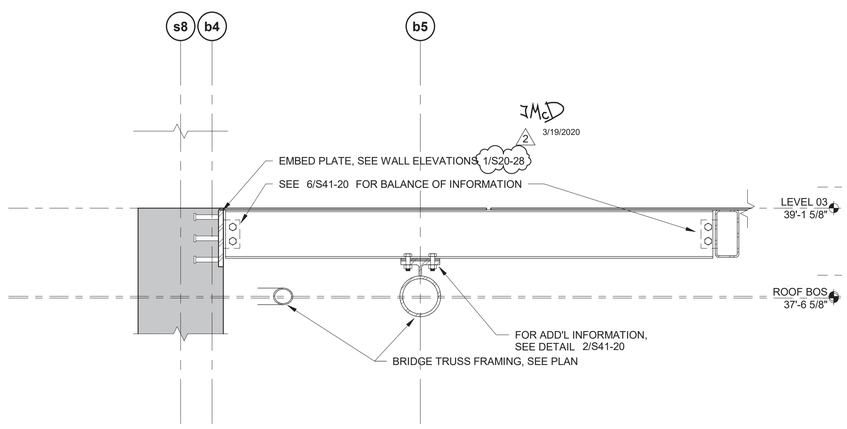

8 SECTION - BRIDGE FLOOR FRAMING
3/4" = 1'-0"

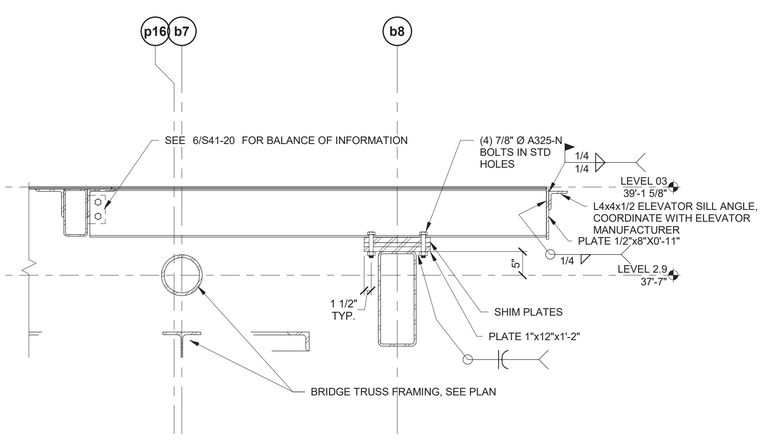

9 SECTION - BRIDGE FLOOR AT ELEVATOR
3/4" = 1'-0"

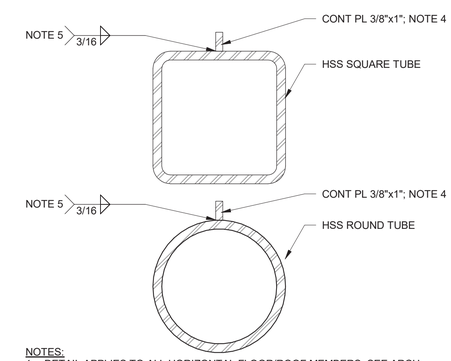

NOTES:
1. DETAIL APPLIES TO ALL HORIZONTAL FLOOR/ROOF MEMBERS; SEE ARCH DWGS FOR EXTENT.
2. DETAIL DOES NOT APPLY TO FLOOR MEMBERS SUPPORTING STEEL FRAMING.
3. PLATE IS NOT SHOWN IN OTHER TOWER/BRIDGE FRAMING DETAILS.
4. BEVEL END OF PLATE TO ACUTE/OBTUSE ANGLES AT INTERFACE WITH VERTICAL/DIAGONAL MEMBERS.
5. TERMINATE WELDS 1/2" CLEAR FROM WELDED JOINTS OF VERTICAL/DIAGONAL MEMBERS.

10 TYPICAL TAB DETAIL
3" = 1'-0"

DESIGN BY:								
DRAWN BY:								
CHECKED BY:								
APPROVED BY:			03/18/2020	BUILDING PERMIT CORRECTIONS 2	EJT	MW	TRM	
CDOT/APPROVED BY:		NO.	DATE	REVISIONS	DES.	DRW.	CHK.	DCCO	CDOT

STATE OF ILLINOIS TERRY R. McDONNELL 081-005[illegible] LICENSED STRUCTURAL ENGINEER
Exp. 11/30/2020

SIMPSON GUMPERTZ & HEGER
Engineering of Structures and Building Enclosures
Simpson Gumpertz & Heger Inc.
135 South LaSalle Street, Suite 3800
Chicago, Illinois 60603
main: 312.754.7500 fax: 312.754.7501
www.sgh.com

PERKINS+WILL
The Wrigley Building
410 North Michigan Ave.
Suite 1600
Chicago, IL 60611
t 312.755.0770
f 312.755.0775
www.perkinswill.com

CDOT
CHICAGO DEPARTMENT OF TRANSPORTATION
DIVISION OF ENGINEERING

154 N DAMEN AVE - DAMEN GREEN LINE STATION

TOWER/BRIDGE - DETAILS

CDOT PROJECT D-7-135 | DATE: 01/27/2020

SPEC. NO.

DRAWING NO. **S41-20**

REVISION NO.

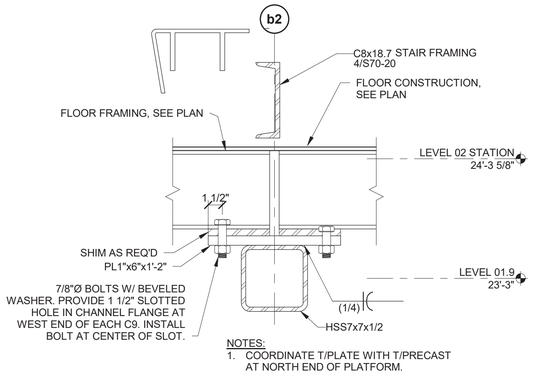

NOTES:
1. COORDINATE T/PLATE WITH T/PRECAST AT NORTH END OF PLATFORM.

1 DETAIL - NORTH END FLOOR FRAMING

1 1/2" = 1'-0"

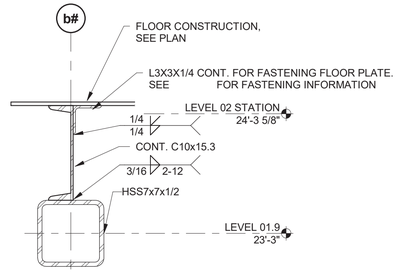

NOTES:
1. COORDINATE T/PLATE WITH T/PRECAST AT NORTH END OF PLATFORM.
2. COORDINATE EDGE OF FLOOR CONSTRUCTION WITH ARCH DWGS.

2 DETAIL - NORTH END EDGE OF PLATE

1 1/2" = 1'-0"

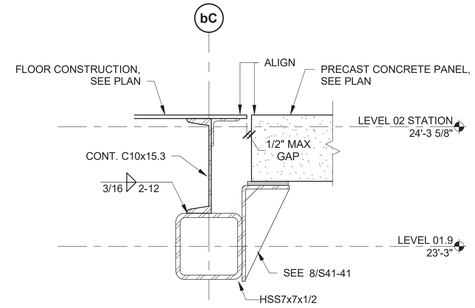

4 DETAIL - PLATE-TO-PRECAST

1 1/2" = 1'-0"

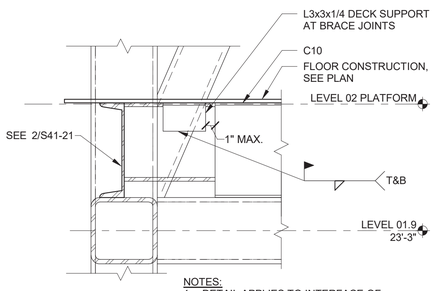

NOTES:
1. DETAIL APPLIES TO INTERFACE OF FLOOR PLATE WITH BRACE JOINTS

5 DETAIL - PLATE SUPPORT AT BRACE

1 1/2" = 1'-0"

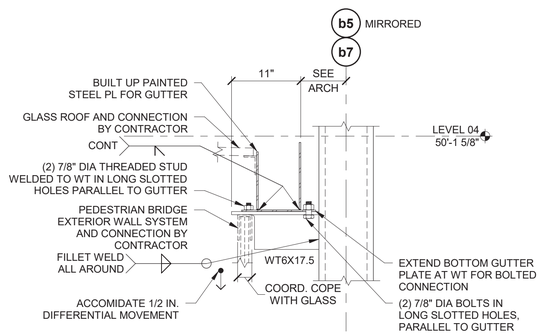

6 DETAIL - GUTTER SUPPORT AT TOWER/BRIDGE

1" = 1'-0"

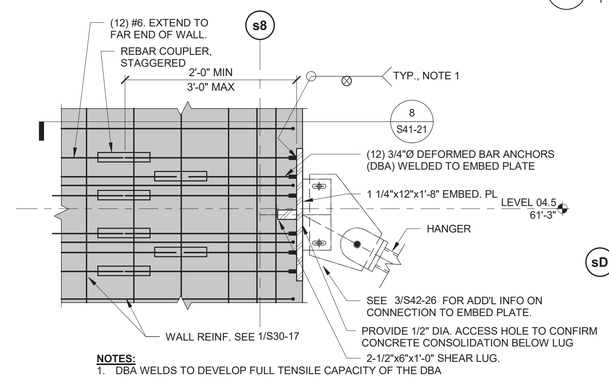

NOTES:
1. DBA WELDS TO DEVELOP FULL TENSILE CAPACITY OF THE DBA

7 HANGER ROD EMBED PLATE SECTION

3/4" = 1'-0"

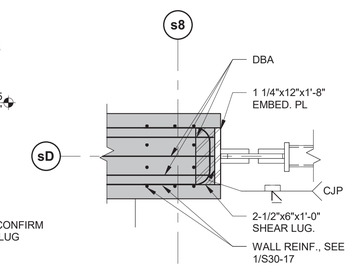

8 HANGER ROD EMBED PLATE PLAN DETAIL

3/4" = 1'-0"

DESIGN BY:									
DRAWN BY:									
CHECKED BY:									
APPROVED BY:			01/27/2020	ISSUE FOR BID	CJB	HMM	TRM		
CDOT/APPROVED BY:		NO.	DATE	REVISIONS	DES.	DRW.	CHK.	DCCO	CDOT

SIMPSON GUMPERTZ & HEGER
Engineering of Structures and Building Enclosures
Simpson Gumpertz & Heger Inc.
135 South LaSalle Street, Suite 3800
Chicago, Illinois 60603
main: 312.754.7500 fax: 312.754.7501
www.sgh.com

PERKINS+WILL
The Wrigley Building
410 North Michigan Ave.
Suite 1600
Chicago, IL 60611
t 312.755.0770
f 312.755.0775
www.perkinswill.com

CDOT
CHICAGO DEPARTMENT OF TRANSPORTATION
DIVISION OF ENGINEERING

154 N DAMEN AVE - DAMEN GREEN LINE STATION

TOWER/BRIDGE - DETAILS

CDOT PROJECT D-7-135

DATE: 01/27/2020

SPEC. NO.

DRAWING NO.
S41-21

REVISION NO.

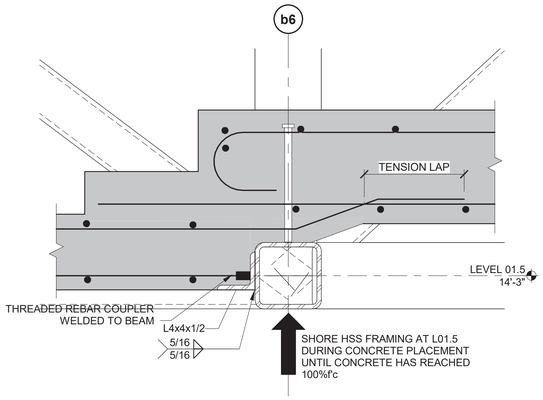

1 SECTION - ELEVATOR ROOM SLAB TRANSITION
1 1/2" = 1'-0"

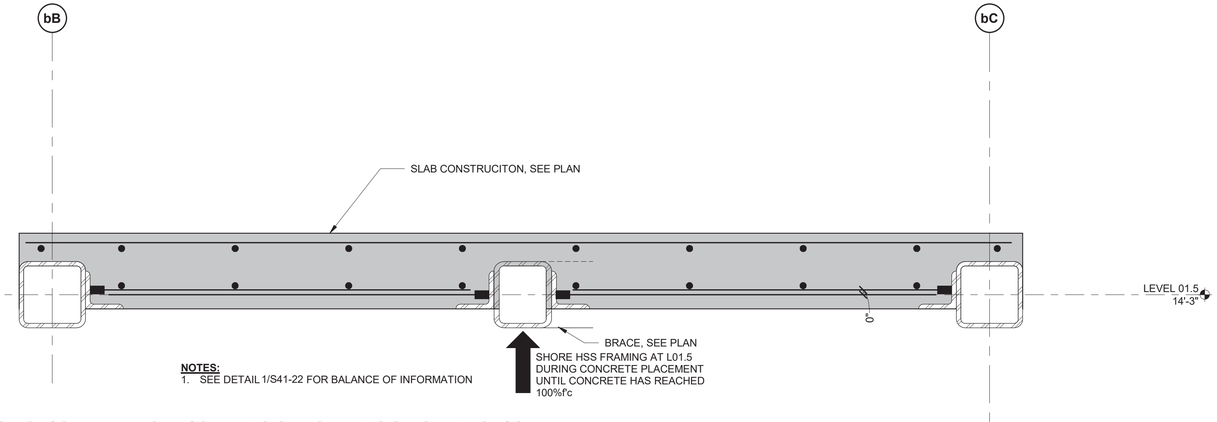

NOTES:
1. SEE DETAIL 1/S41-22 FOR BALANCE OF INFORMATION

2 SECTION - ELECTRICAL ROOM SLAB CONSTRUCTION
1 1/2" = 1'-0"

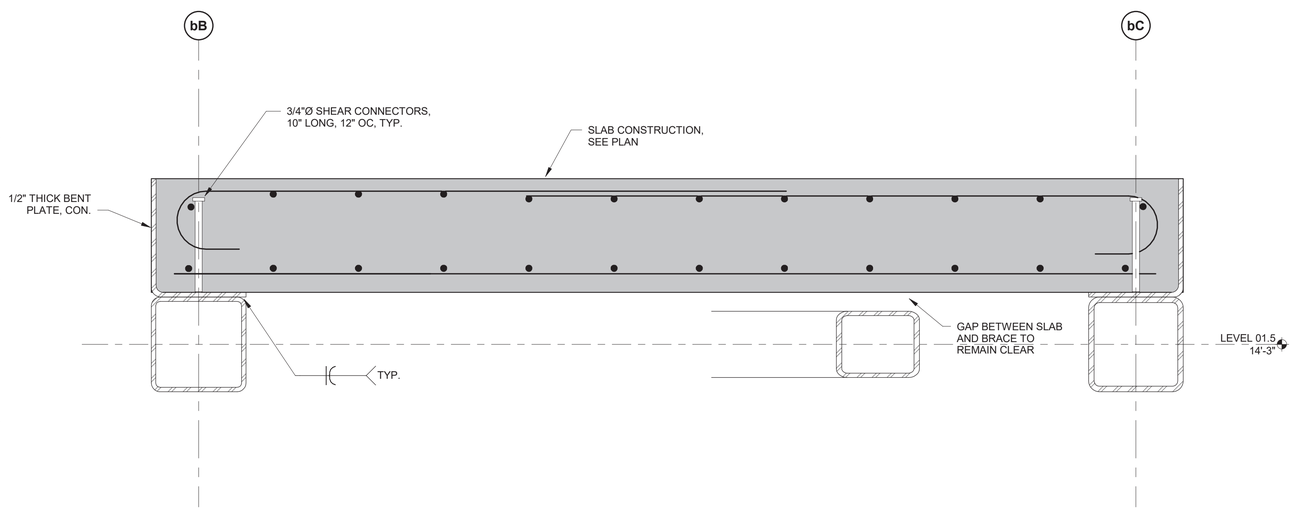

3 SECTION - ELEVATOR MACHINE ROOM AND PIT SLAB
1 1/2" = 1'-0"

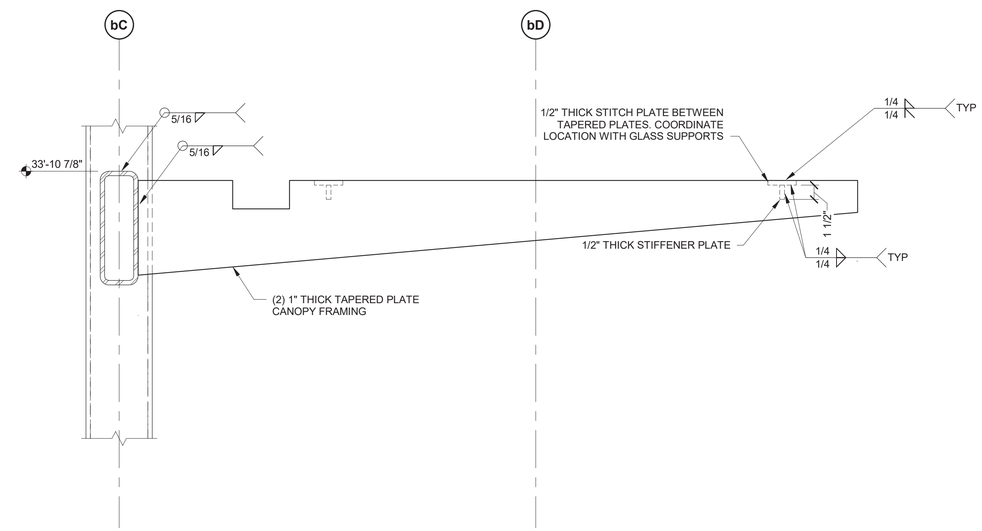

4 SECTION - NORTH SIDE CANOPY
1 1/2" = 1'-0"

DESIGN BY:									
DRAWN BY:									
CHECKED BY:									
APPROVED BY:			01/27/2020	ISSUE FOR BID	EJT	HMM	TRM		
CDOT/APPROVED BY:		NO.	DATE	REVISIONS	DES.	DRW.	CHK.	DCCO	CDOT

SIMPSON GUMPERTZ & HEGER
Engineering of Structures and Building Enclosures
Simpson Gumpertz & Heger Inc.
135 South LaSalle Street, Suite 3800
Chicago, Illinois 60603
main: 312.754.7500 fax: 312.754.7501
www.sgh.com

PERKINS+WILL
The Wrigley Building
410 North Michigan Ave.
Suite 1600
Chicago, IL 60611
t 312.755.0770
f 312.755.0775
www.perkinswill.com

CDOT
CHICAGO DEPARTMENT OF TRANSPORTATION
DIVISION OF ENGINEERING

154 N DAMEN AVE - DAMEN GREEN LINE STATION

TOWER/BRIDGE - DETAILS

CDOT PROJECT D-7-135 | DATE: 01/27/2020

SPEC. NO.

DRAWING NO. **S41-22**

REVISION NO.

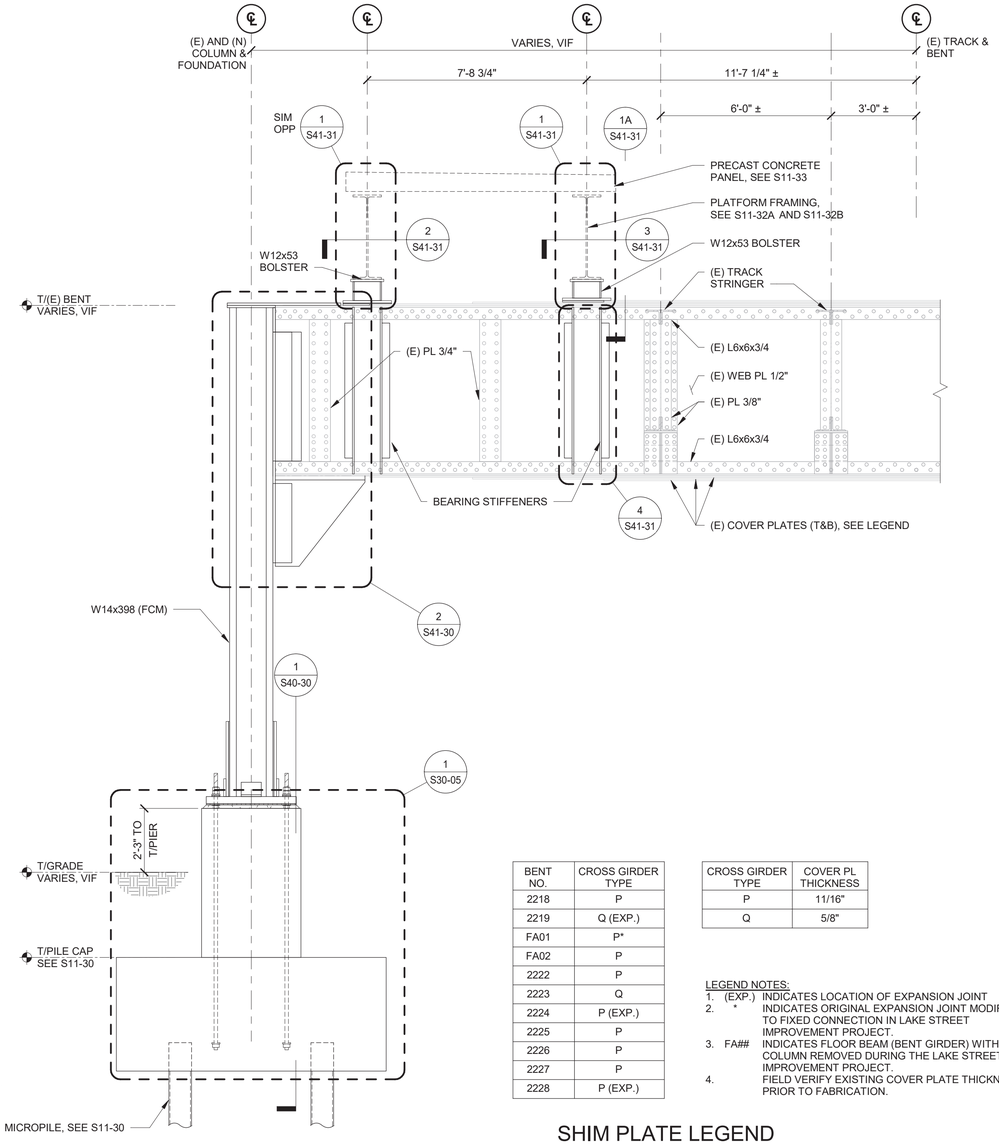

NOTES:
1. ALL WORK TO MODIFY THE EXISTING BENT SHALL BE COMPLETED PRIOR TO REMOVING SHORING AND PLATFORM FRAMING CONSTRUCTION.
2. SEE SD DRAWINGS FOR SUGGESTED SHORING.
3. SEE S21-31 FOR PROCEDURES FOR REPLACING EXISTING RIVETS WITH NEW BOLTS.

1 TYPICAL BENT ELEVATION
3/8" = 1'-0"

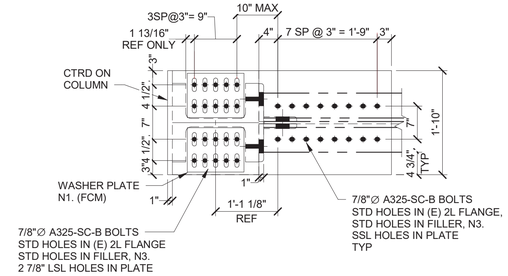

NOTES:
1. ALL HOLES TO BE COMPLETELY COVERED BY WASHERS.

B Track Bent - Section B
3/4" = 1'-0"

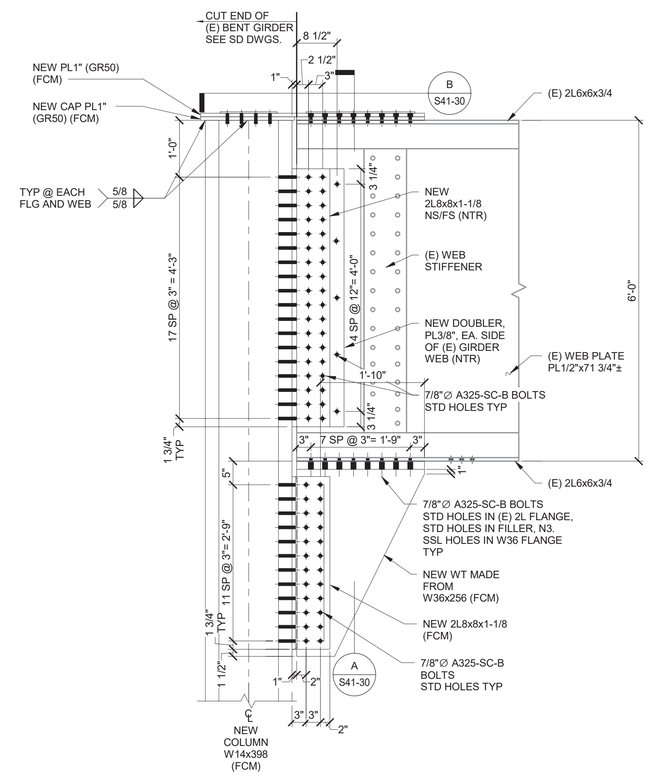

NOTES:
N1. COVER ALL SLOTTED HOLES WITH WASHER PLATES, 5/16" MIN THICKNESS
N2. CONTRACTOR TO CONFIRM EXACT WASHER SIZE NEEDED TO COVER THE SLOT IN THE FINAL CONDITION.
N3. FIELD VERIFY ALL HOLE LOCATIONS PRIOR TO FABRICATION
N4. FILLER - (1) PL1/4" MAX, DO NOT USE MULTIPLE FILLS

2 EXISTING BENT GIRDER TO COLUMN CONNECTION
3/4" = 1'-0"

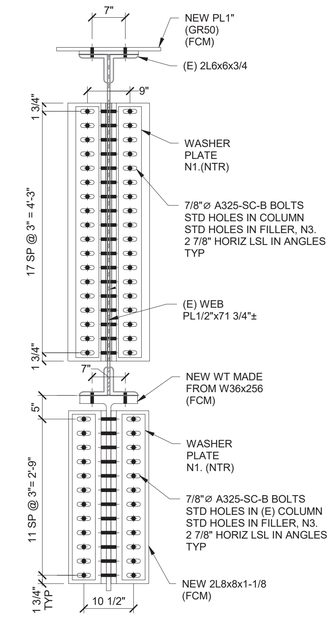

A Track Bent - Section A
3/4" = 1'-0"

BENT NO.	CROSS GIRDER TYPE
2218	P
2219	Q (EXP.)
FA01	P*
FA02	P
2222	P
2223	Q
2224	P (EXP.)
2225	P
2226	P
2227	P
2228	P (EXP.)

CROSS GIRDER TYPE	COVER PL THICKNESS
P	11/16"
Q	5/8"

LEGEND NOTES:
1. (EXP.) INDICATES LOCATION OF EXPANSION JOINT
2. * INDICATES ORIGINAL EXPANSION JOINT MODIFIED TO FIXED CONNECTION IN LAKE STREET IMPROVEMENT PROJECT.
3. FA## INDICATES FLOOR BEAM (BENT GIRDER) WITH COLUMN REMOVED DURING THE LAKE STREET IMPROVEMENT PROJECT.
4. FIELD VERIFY EXISTING COVER PLATE THICKNESS PRIOR TO FABRICATION.

SHIM PLATE LEGEND

DESIGN BY:									
DRAWN BY:									
CHECKED BY:									
APPROVED BY:			01/27/2020	ISSUE FOR BID	EJT	HMM	TRM		
CDOT/APPROVED BY:		NO.	DATE	REVISIONS	DES.	DRW.	CHK.	DCCO	CDOT

SIMPSON GUMPERTZ & HEGER
Engineering of Structures and Building Enclosures
Simpson Gumpertz & Heger Inc.
135 South LaSalle Street, Suite 3800
Chicago, Illinois 60603
main: 312.754.7500 fax: 312.754.7501
www.sgh.com

PERKINS+WILL
The Wrigley Building
410 North Michigan Ave.
Suite 1600
Chicago, IL 60611
t 312.755.0770
f 312.755.0775
www.perkinswill.com

CDOT
CHICAGO DEPARTMENT OF TRANSPORTATION
DIVISION OF ENGINEERING

154 N DAMEN AVE - DAMEN GREEN LINE STATION

PLATFORM - EXISTING BENT MODIFICATIONS

CDOT PROJECT D-7-135 | DATE: 01/27/2020

SPEC. NO.

DRAWING NO. **S41-30**

REVISION NO.

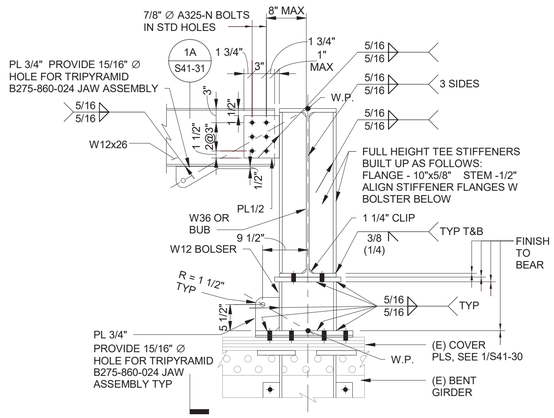

NOTES:
1. AT BUB MEMBERS, SHOP BOLT STD BEARING BOLTS AT TOP OF BOLTSTER. SIDE PLATES OF BUB MEMBER WILL NOT ALLOW FOR TIGHTENING IN FIELD.

1 PLATFORM FRAMING TO EXISTING BENT GIRDER CONNECTION
3/4" = 1'-0"

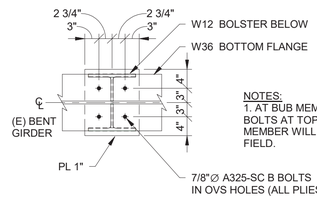

NOTES:
1. AT BUB MEMBERS, SHOP BOLT STD BEARING BOLTS AT TOP OF BOLTSTER. SIDE PLATES OF BUB MEMBER WILL NOT ALLOW FOR TIGHTENING IN FIELD.

1B SECTION
3/4" = 1'-0"

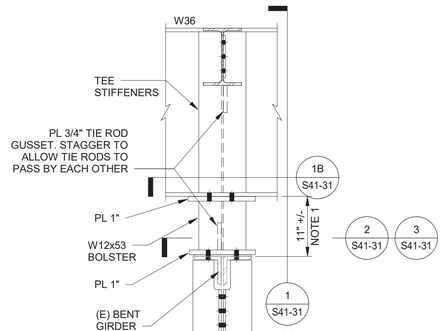

NOTES:
1. FIELD SURVEY EXISTING TRACK STRUCTURE PRIOR TO FABRICATION. FABRICATE BOLSTER AS NECESSARY TO ACHIEVE REQUIRED TOP OF PLATFORM ELEVATION. SEE PLATFORM FRAMING PLANS.

1A BOLSTER - SECTION 1A
3/4" = 1'-0"

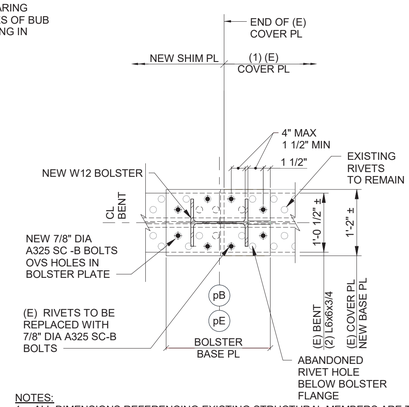

NOTES:
1. ALL DIMENSIONS REFERENCING EXISTING STRUCTURAL MEMBERS ARE TO BE VERIFIED IN THE FIELD
2. ALL RIVETS ATTACHING NEW PLATES TO (E) FLANGE ANGLES ARE TO BE REPLACED WITH HIGH STRENGTH BOLTS. A MINIMUM OF 8 BOLTS SHALL ATTACH THE BASE PLATE TO THE TOP FLANGE WITH THE LAYOUT REQUIREMENTS AS SHOWN, WITH FOUR BOLTS BETWEEN THE BOLSTER FLANGES AND FOUR MORE OUTSIDE OF THE BOLSTER FLANGES. FILL ANY ADDITIONAL (E) RIVET HOLES BETWEEN THE BOLSTER FLANGES W HIGH STRENGTH BOLTS. LOCATIONS OF THE BOLT HOLES AND PLATE GEOMETRY TO BE BASED ON FIELD MEASUREMENTS

2 SECTION - GRIDLINES pB AND pE
3/4" = 1'-0"

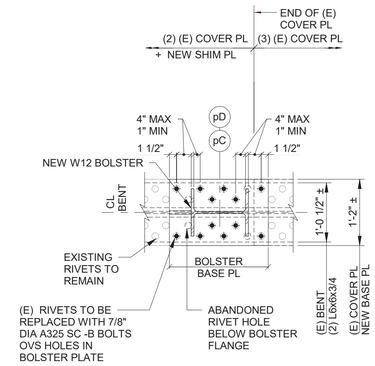

NOTES:
1. ALL DIMENSIONS REFERENCING EXISTING STRUCTURAL MEMBERS ARE TO BE VERIFIED IN THE FIELD
2. ALL RIVETS ATTACHING NEW PLATES TO (E) FLANGE ANGLES ARE TO BE REPLACED WITH HIGH STRENGTH BOLTS. A MINIMUM OF 8 BOLTS SHALL ATTACH THE BASE PLATE TO THE TOP FLANGE WITH THE LAYOUT REQUIREMENTS AS SHOWN, WITH FOUR BOLTS BETWEEN THE BOLSTER FLANGES AND FOUR MORE OUTSIDE OF THE BOLSTER FLANGES. FILL ANY ADDITIONAL (E) RIVET HOLES BETWEEN THE BOLSTER FLANGES W HIGH STRENGTH BOLTS. LOCATIONS OF THE BOLT HOLES AND PLATE GEOMETRY TO BE BASED ON FIELD MEASUREMENTS

3 SECTION - GRIDLINES pC AND pD
3/4" = 1'-0"

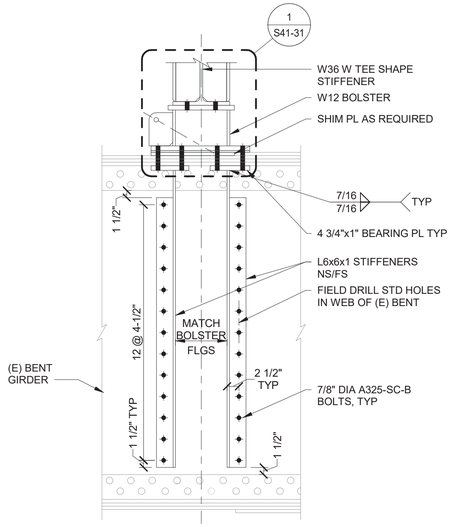

4 STIFFENER IN EXISTING BENT GIRDER
3/4" = 1'-0"

DESIGN BY:									
DRAWN BY:									
CHECKED BY:									
APPROVED BY:			01/27/2020	ISSUE FOR BID	EJT	HMM	TRM		
CDOT/APPROVED BY:		NO.	DATE	REVISIONS	DES.	DRW.	CHK.	DCCO	CDOT

SIMPSON GUMPERTZ & HEGER
Engineering of Structures and Building Enclosures
Simpson Gumpertz & Heger Inc.
135 South LaSalle Street, Suite 3800
Chicago, Illinois 60603
main: 312.754.7500 fax: 312.754.7501
www.sgh.com

PERKINS+WILL
The Wrigley Building
410 North Michigan Ave.
Suite 1600
Chicago, IL 60611
t 312.755.0770
f 312.755.0775
www.perkinswill.com

CDOT
CHICAGO DEPARTMENT OF TRANSPORTATION
DIVISION OF ENGINEERING

154 N DAMEN AVE - DAMEN GREEN LINE STATION

PLATFORM - EXISTING BENT MODIFICATIONS

CDOT PROJECT D-7-135 | DATE: 01/27/2020

SPEC. NO.

DRAWING NO. **S41-31**

REVISION NO.

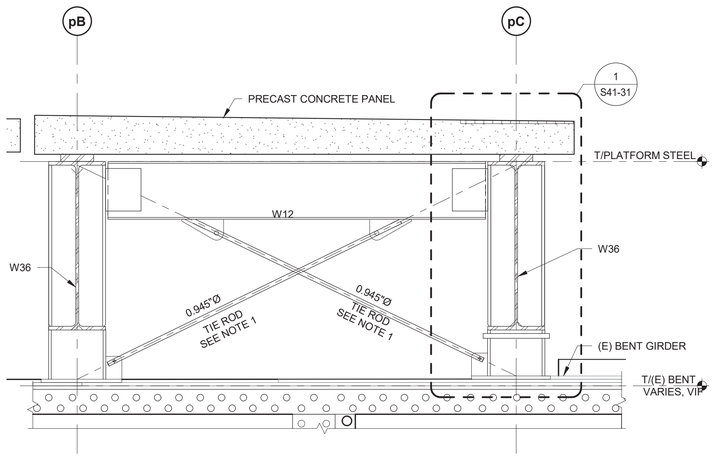

NOTE:
1. BASIS OF DESIGN: TRIPYRAMID A70-024 W/ B275-860-024 JAW ASSEMBLIES GRADE 460 CARBON STEEL. f_u = 90 KSI; E = 30,000 KSI. SUBMIT ALTERNATE ASSEMBLY TO COMISSIONER FOR REVIEW/APPROVAL. DESIGN AXIAL LOAD = 24 KIPS.

1 SECTION AT BENT GIRDER
3/4" = 1'-0"

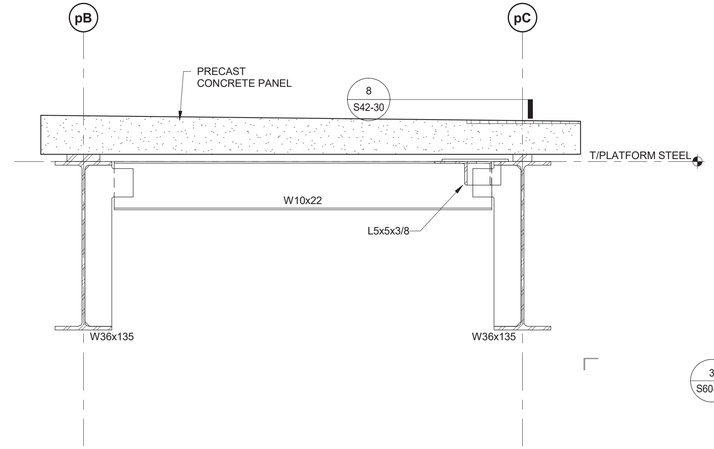

2 SECTION AT PLAN BRACING
3/4" = 1'-0"

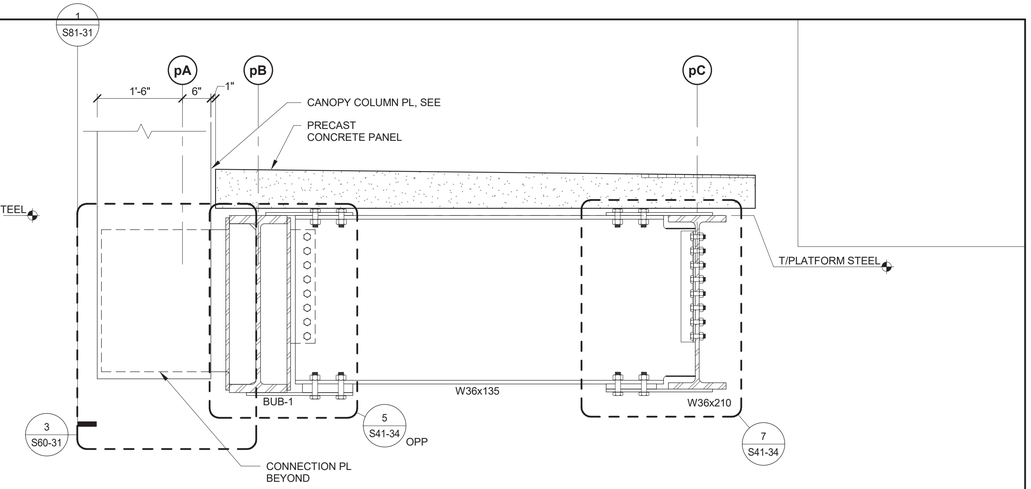

3 SECTION AT STAIR CANOPY
3/4" = 1'-0"

DESIGN BY:									
DRAWN BY:									
CHECKED BY:									
APPROVED BY:			01/27/2020	ISSUE FOR BID	EJT	HMM	TRM		
CDOT/APPROVED BY:		NO.	DATE	REVISIONS	DES.	DRW.	CHK.	DCCO	CDOT

SIMPSON GUMPERTZ & HEGER
Engineering of Structures and Building Enclosures
Simpson Gumpertz & Heger Inc.
135 South LaSalle Street, Suite 3800
Chicago, Illinois 60603
main: 312.754.7500 fax: 312.754.7501
www.sgh.com

PERKINS+WILL
The Wrigley Building
410 North Michigan Ave.
Suite 1600
Chicago, IL 60611
t 312.755.0770
f 312.755.0775
www.perkinswill.com

CDOT
CHICAGO DEPARTMENT OF TRANSPORTATION
DIVISION OF ENGINEERING

154 N DAMEN AVE - DAMEN GREEN LINE STATION

PLATFORM - SECTIONS

CDOT PROJECT D-7-135 | DATE: 01/27/2020

SPEC. NO.

DRAWING NO. **S41-32**

REVISION NO.

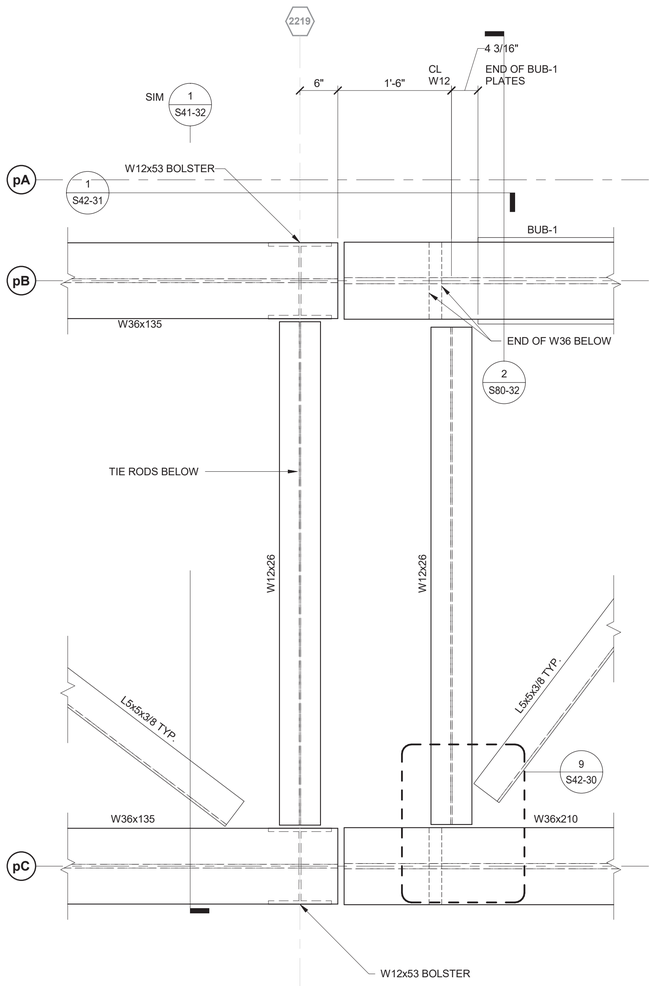

1 PLAN DETAIL - EAST EXPANSION JOINT
1" = 1'-0"

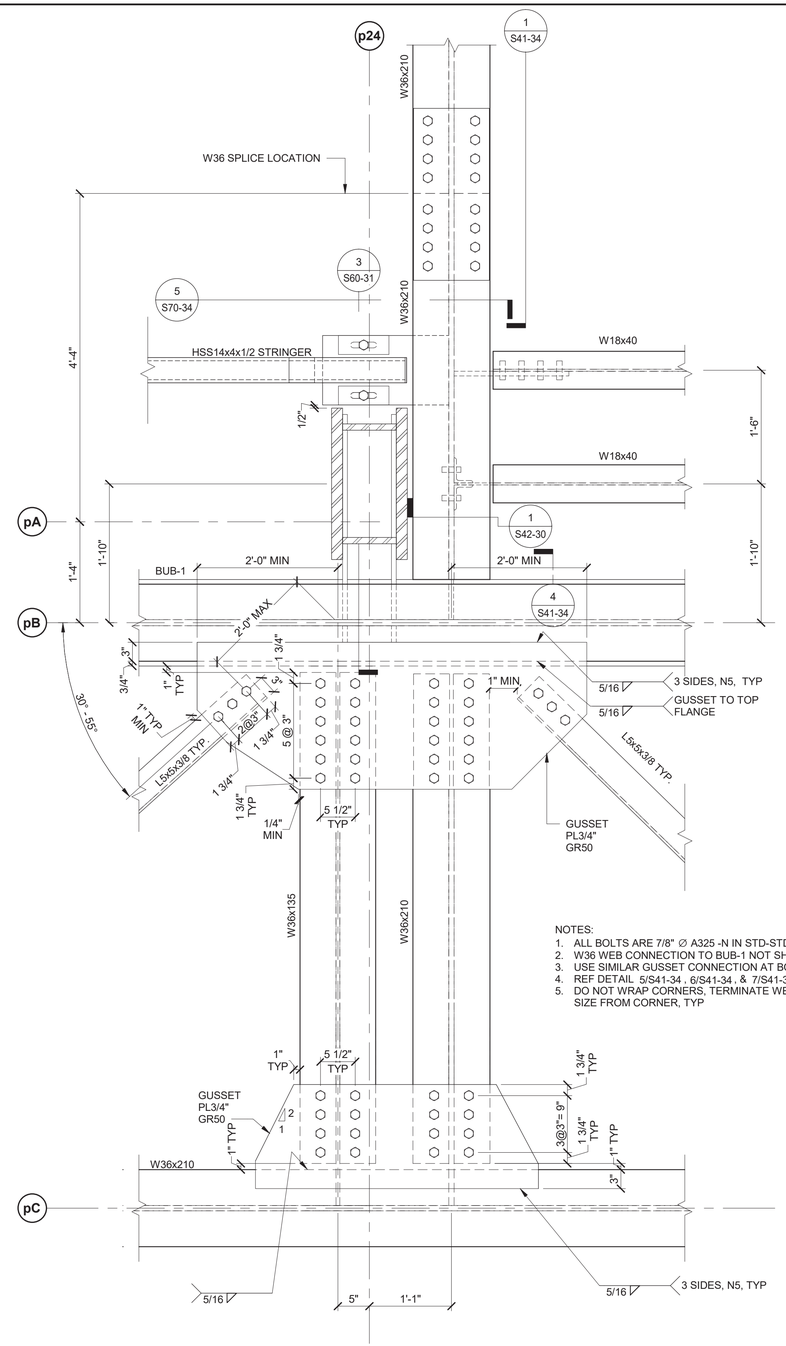

NOTES:
1. ALL BOLTS ARE 7/8" ∅ A325 -N IN STD-STD HOLES
2. W36 WEB CONNECTION TO BUB-1 NOT SHOWN
3. USE SIMILAR GUSSET CONNECTION AT BOTTOM FLANGE
4. REF DETAIL 5/S41-34 , 6/S41-34 , & 7/S41-34
5. DO NOT WRAP CORNERS, TERMINATE WELD 1 WELD SIZE FROM CORNER, TYP

2 PLAN DETAIL - STAIR CANOPY
1" = 1'-0"

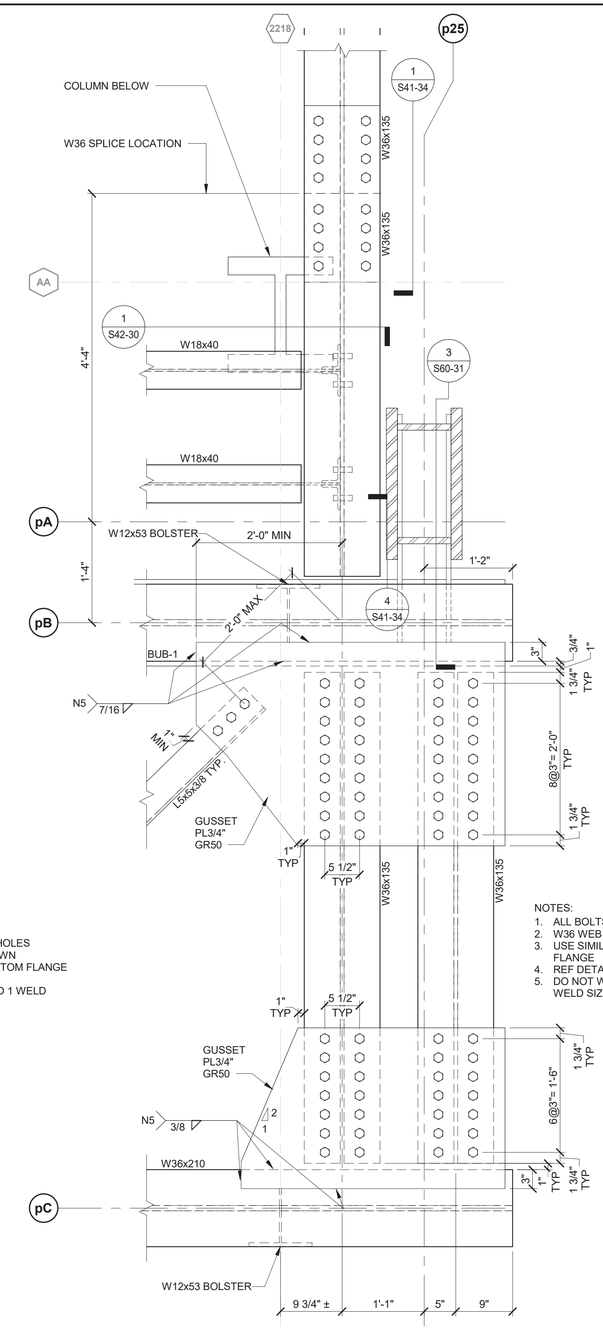

NOTES:
1. ALL BOLTS ARE 7/8" ∅ A325 -N IN STD-STD HOLES
2. W36 WEB CONNECTION TO BUB-1 NOT SHOWN
3. USE SIMILAR GUSSET CONNECTION AT BOTTOM FLANGE
4. REF DETAIL 5/S41-34 , 6/S41-34 , & 7/S41-34
5. DO NOT WRAP CORNERS, TERMINATE WELD 1 WELD SIZE FROM CORNER, TYP

3 PLAN DETAIL - EAST END
1" = 1'-0"

DESIGN BY:									
DRAWN BY:									
CHECKED BY:									
APPROVED BY:			01/27/2020	ISSUE FOR BID	CJB	HMM	TRM		
CDOT/APPROVED BY:		NO.	DATE	REVISIONS	DES.	DRW.	CHK.	DCCO	CDOT

SIMPSON GUMPERTZ & HEGER
Engineering of Structures and Building Enclosures
Simpson Gumpertz & Heger Inc.
135 South LaSalle Street, Suite 3800
Chicago, Illinois 60603
main: 312.754.7500 fax: 312.754.7501
www.sgh.com

PERKINS+WILL
The Wrigley Building
410 North Michigan Ave.
Suite 1600
Chicago, IL 60611
t 312.755.0770
f 312.755.0775
www.perkinswill.com

CDOT
CHICAGO DEPARTMENT OF TRANSPORTATION
DIVISION OF ENGINEERING

154 N DAMEN AVE - DAMEN GREEN LINE STATION

PLATFORM - PLAN DETAILS

CDOT PROJECT D-7-135 | DATE: 01/27/2020

SPEC. NO.

DRAWING NO. **S41-33**

REVISION NO.

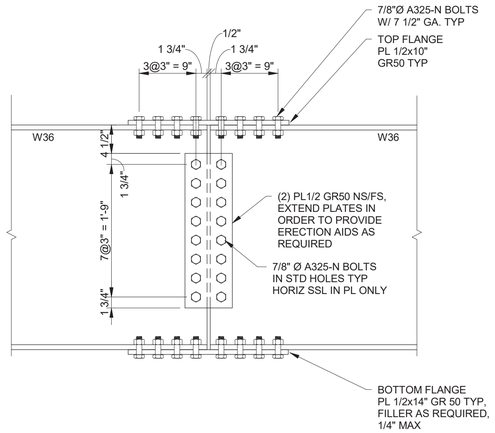

1 W36 SPLICE
1" = 1'-0"

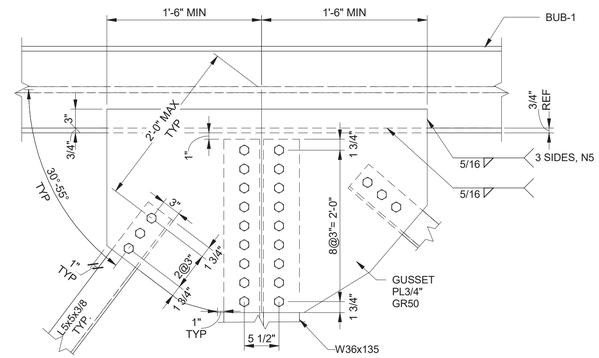

NOTES:
1. ALL BOLTS ARE 7/8" ∅ A325 -N IN STD-STD HOLES
2. W36 WEB CONNECTION TO BUB-1 NOT SHOWN
3. USE SIMILAR GUSSET CONNECTION AT BOTTOM FLANGE
4. REF DETAIL 5/S41-34 & 6/S41-34 FOR SHEAR/MOMENT CONNECTION DETAILS.
5. DO NOT WRAP CORNERS, TERMINATE WELD 5/16" FROM CORNER

2 W36 TO BUB-1 MOMENT CONNECTION
1" = 1'-0"

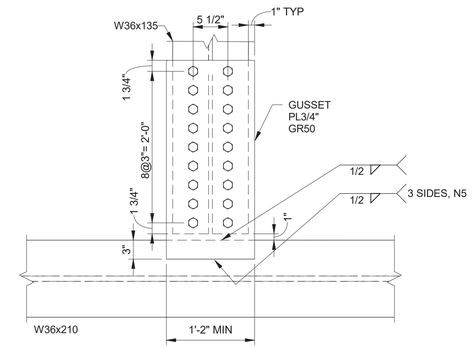

NOTES:
1. ALL BOLTS ARE 7/8" ∅ A325 -N IN STD-STD HOLES
2. W36 WEB CONNECTION TO W36 NOT SHOWN
3. USE SIMILAR GUSSET CONNECTION AT BOTTOM FLANGE
4. REF DETAIL 6/S41-34 & 7/S41-34 FOR SHEAR/MOMENT CONNECTIONS.
5. DO NOT WRAP CORNERS, TERMINATE WELD 1/2" FROM CORNER

3 W36 TO W36 MOMENT CONNECTION
1" = 1'-0"

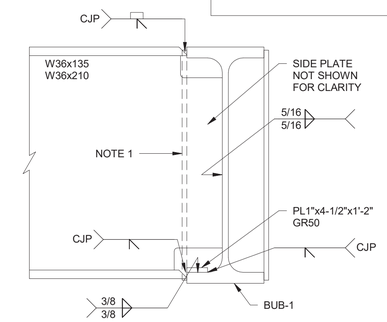

NOTES:
1. BUB-1 SIDE PLATE NOT SHOWN FOR CLARITY. SLOT SIDE PLATE FOR MOMENT CONNECTION. SEE 3/S41-35

4 W36 TO BUB-1 MOMENT CONNECTION
1" = 1'-0"

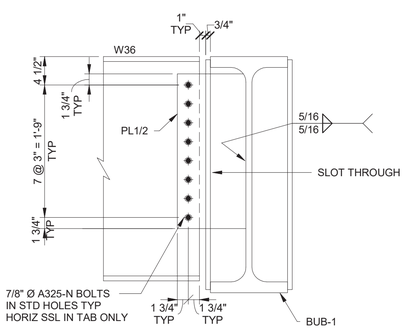

5 TYP W36 TO BUB-1 SHEAR CONNECTION
1" = 1'-0"

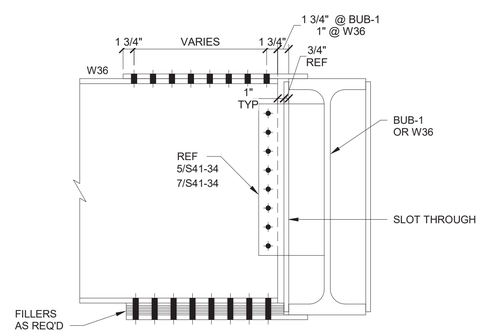

6 TYP MOMENT CONNECTION
1" = 1'-0"

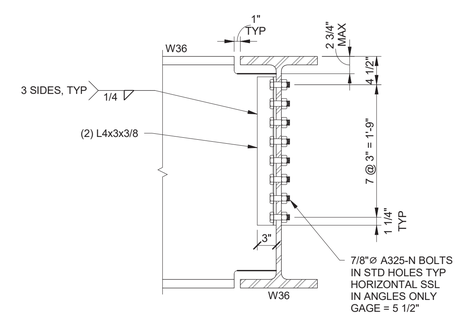

7 TYP W36 TO W36 SHEAR CONNECTION
1" = 1'-0"

DESIGN BY:									
DRAWN BY:									
CHECKED BY:									
APPROVED BY:			01/27/2020	ISSUE FOR BID	CJB	CJB	TRM		
CDOT/APPROVED BY:		NO.	DATE	REVISIONS	DES.	DRW.	CHK.	DCCO	CDOT

SIMPSON GUMPERTZ & HEGER
Engineering of Structures and Building Enclosures
Simpson Gumpertz & Heger Inc.
135 South LaSalle Street, Suite 3800
Chicago, Illinois 60603
main: 312.754.7500 fax: 312.754.7501
www.sgh.com

PERKINS+WILL
The Wrigley Building
410 North Michigan Ave.
Suite 1600
Chicago, IL 60611
t 312.755.0770
f 312.755.0775
www.perkinswill.com

CDOT
CHICAGO DEPARTMENT OF TRANSPORTATION
DIVISION OF ENGINEERING

154 N DAMEN AVE - DAMEN GREEN LINE STATION

PLATFORM - SECTIONS AND DETAILS

CDOT PROJECT D-7-135 | DATE: 01/27/2020

SPEC. NO.

DRAWING NO. **S41-34**

REVISION NO.

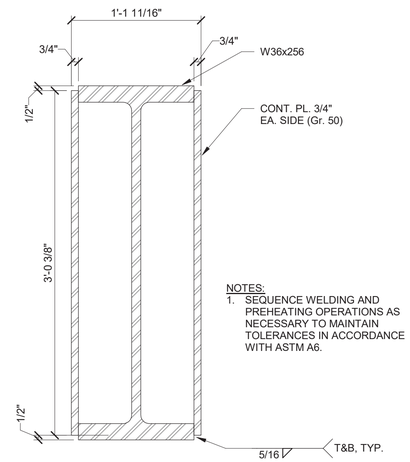

NOTES:
1. SEQUENCE WELDING AND PREHEATING OPERATIONS AS NECESSARY TO MAINTAIN TOLERANCES IN ACCORDANCE WITH ASTM A6.

1 BUB-1 DETAIL
1 1/2" = 1'-0"

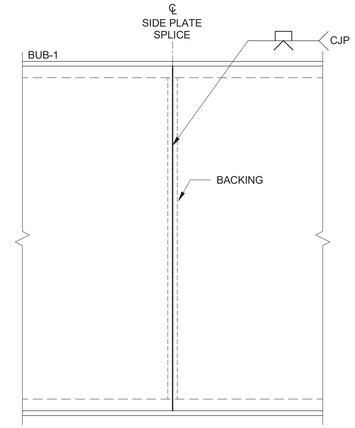

2 BUB-1 SIDE PLATE SPLICE DETAIL
1 1/2" = 1'-0"

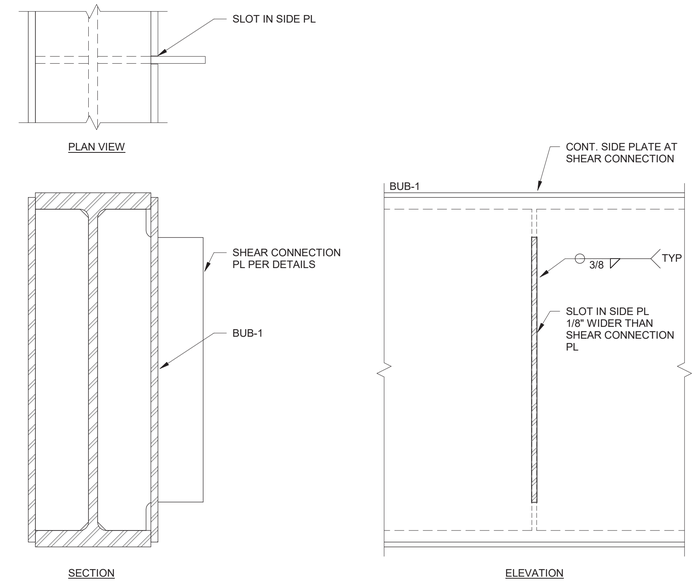

3 BUB-1 DETAIL AT SHEAR CONNECTION
1 1/2" = 1'-0"

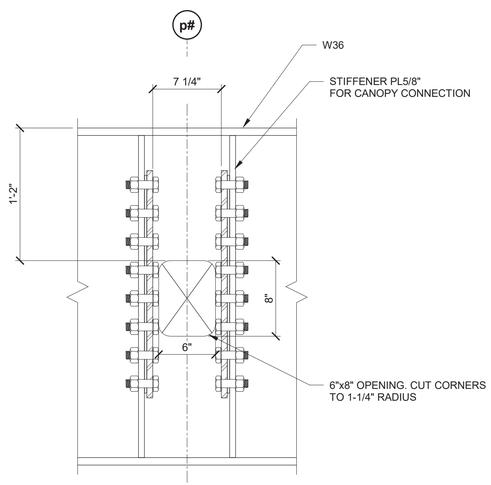

TYPE 1

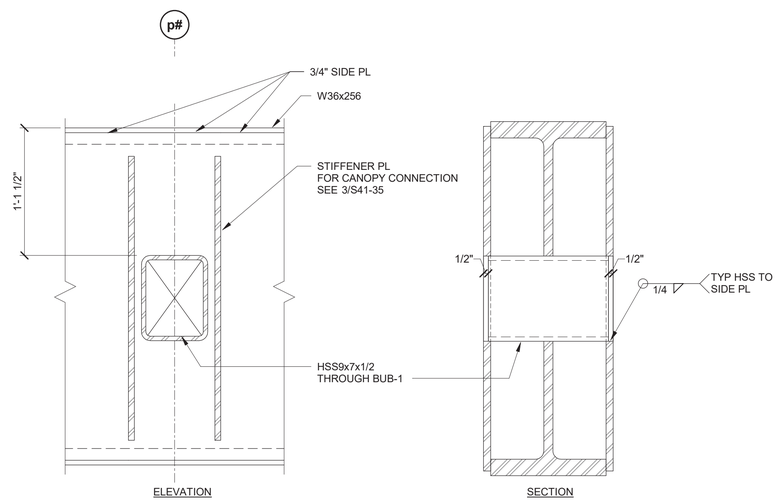

TYPE 2

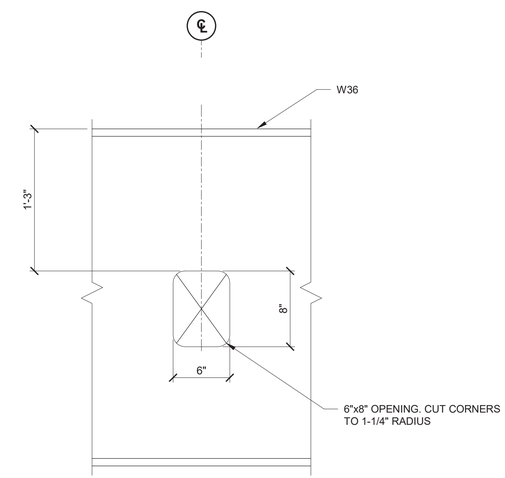

TYPE 3

NOTES:
1. SEE PLAN FOR OPENING LOCATIONS; COORDINATE WITH ARCH. AND PLUMBING DWGS.

4 TYPICAL PLUMBING PENETRATION IN W36
1 1/2" = 1'-0"

DESIGN BY:									
DRAWN BY:									
CHECKED BY:									
APPROVED BY:			01/27/2020	ISSUE FOR BID	CJB	HMM	TRM		
CDOT/APPROVED BY:		NO.	DATE	REVISIONS	DES.	DRW.	CHK.	DCCO	CDOT

SIMPSON GUMPERTZ & HEGER
Engineering of Structures and Building Enclosures
Simpson Gumpertz & Heger Inc.
135 South LaSalle Street, Suite 3800
Chicago, Illinois 60603
main: 312.754.7500 fax: 312.754.7501
www.sgh.com

PERKINS+WILL
The Wrigley Building
410 North Michigan Ave.
Suite 1600
Chicago, IL 60611
t 312.755.0770
f 312.755.0775
www.perkinswill.com

CDOT
CHICAGO DEPARTMENT OF TRANSPORTATION
DIVISION OF ENGINEERING

154 N DAMEN AVE - DAMEN GREEN LINE STATION

PLATFORM - SECTIONS AND DETAILS

CDOT PROJECT D-7-135 | DATE: 01/27/2020

SPEC. NO.

DRAWING NO. **S41-35**

REVISION NO.

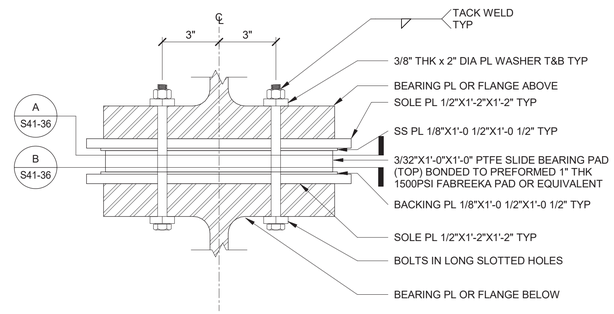

1 EXPANSION BEARING ASSEMBLY - TYPE 1

3" = 1'-0"

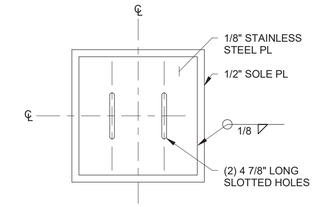

A TOP ASSEMBLY

1 1/2" = 1'-0"

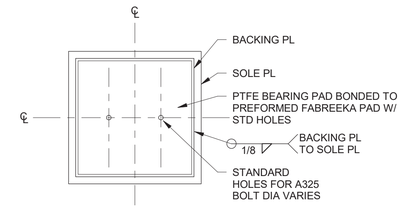

B BOTTOM ASSEMBLY

1 1/2" = 1'-0"

DESIGN BY:									
DRAWN BY:									
CHECKED BY:									
APPROVED BY:			01/27/2020	ISSUE FOR BID	EJT	MW	TRM		
CDOT/APPROVED BY:		NO.	DATE	REVISIONS	DES.	DRW.	CHK.	DCCO	CDOT

SIMPSON GUMPERTZ & HEGER
Engineering of Structures and Building Enclosures
Simpson Gumpertz & Heger Inc.
135 South LaSalle Street, Suite 3800
Chicago, Illinois 60603
main: 312.754.7500 fax: 312.754.7501
www.sgh.com

PERKINS+WILL
The Wrigley Building
410 North Michigan Ave.
Suite 1600
Chicago, IL 60611
t 312.755.0770
f 312.755.0775
www.perkinswill.com

CDOT
CHICAGO DEPARTMENT OF TRANSPORTATION
DIVISION OF ENGINEERING

154 N DAMEN AVE - DAMEN GREEN LINE STATION

PLATFORM - SECTIONS AND DETAILS

CDOT PROJECT D-7-135

DATE: 01/27/2020

SPEC. NO.

DRAWING NO. **S41-36**

REVISION NO.

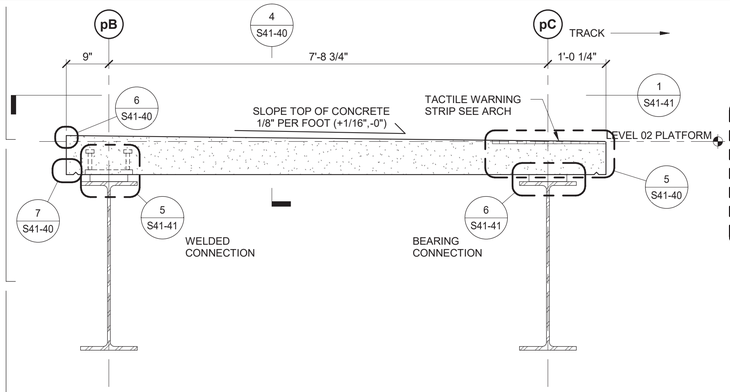

1 TYPICAL PRECAST SLAB SECTION

3/4" = 1'-0"

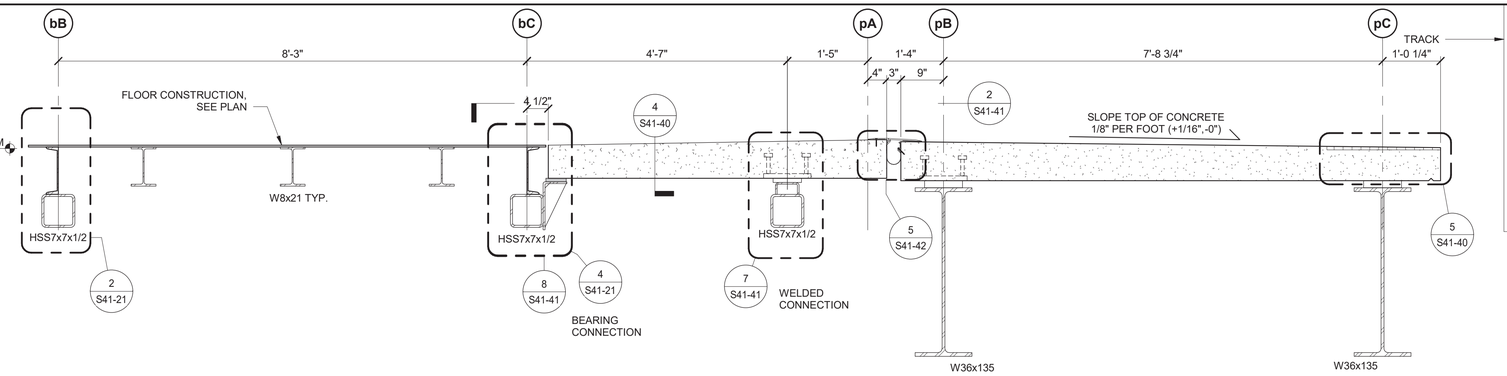

2 TYPICAL PRECAST SLAB SECTION AT NORTH END

3/4" = 1'-0"

PRECAST DELEGATED DESIGN NOTES

1. GENERAL
   A. Precast concrete design is a delegated design to the General Contractor.
   B. Engage a licensed structural engineer in the State of Illinois to design the precast concrete system.
   C. Precast concrete system includes precast panels, reinforcement, embeds, connection hardware, lifting devices, and accessories.
   D. See Specification 03 45 00 Architectural Precast Concrete for additional information.
   E. Fabricate and install precast panels for the no-discernible-cracking criteria per Section 5.2.2.1 of the Precast Concrete Institue Design Handbook, 8th Edition.

2. MATERIALS
   A. See Structural General Notes for precast concrete material properties.

3. DESIGN
   A. Design Loads - See Precast Plans.
   B. Limit live load deflection to L/480.
   C. Design shall also include temporary transportation and erection loading.
   D. Reinforcement and connection hardware, where shown on the Drawings, indicates minimum requirements. Determine final quantities and arrangements per the precast concrete manufacturer's design.

4. FABRICATION
   A. Provide embeds to align with shims. Contractor is solely responsible for final coordination of shims and embed plates. A minimum four points of connection at each precast panel is required.
   B. Inserts, embeds, or attachments on upper surface or side exposed surface of precast panels is prohibited, unless specifically detailed in the Drawings or approved by the Commissioner.
   C. Slope top surface of precast panels as shown in the Drawings.
   D. Align tactile warning strip panel between adjacent precast panels.

5. INSTALLATION
   A. Suggested Lifting Method:
      a. Use load-rated nylon or similar heavy duty slings to lift and place precast (min. of 3 slings per piece)
      b. Utilize spreader bars to minimize axial compression during lifting.
   B. Protect top surface of precast during construction.
   C. Drilling into the sides or top of precast for the purposes of erection or transporting is not permitted, unless approved by the Commissioner.
   D. Contractor shall not use crow bars to adjust the alignment of the precast.

6. DEFERRED SUBMITTALS
   A. See General Notes for additional deferred submittals.
   B. Concrete Mix Design [Specification 03 45 00]
   C. Shop drawings and calculations signed and sealed by a licensed structural engineer in the State of Illinois. [Specification 03 45 00]
   D. Precast panel installation process plan. [Specification 03 45 00]

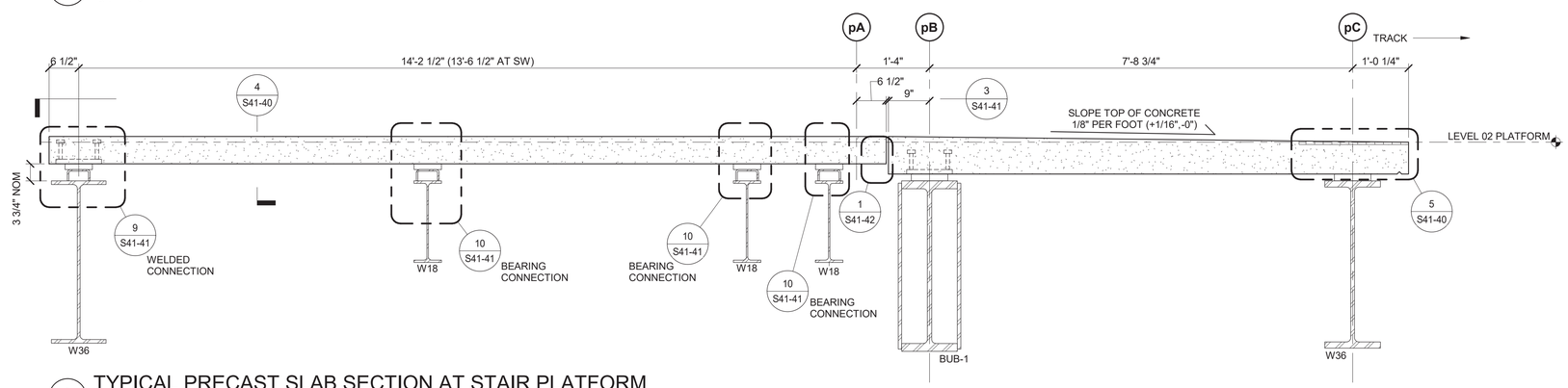

3 TYPICAL PRECAST SLAB SECTION AT STAIR PLATFORM

3/4" = 1'-0"

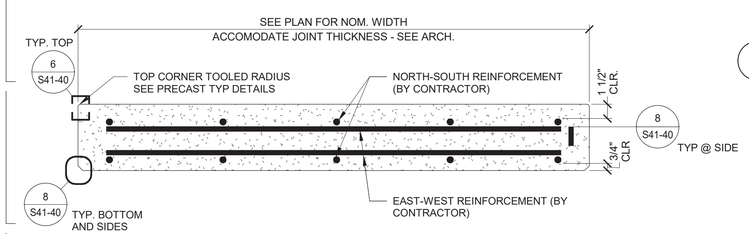

4 TYPICAL PRECAST SLAB REINFORCEMENT

1 1/2" = 1'-0"

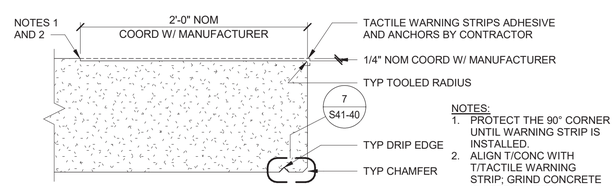

NOTES:
1. PROTECT THE 90° CORNER UNTIL WARNING STRIP IS INSTALLED.
2. ALIGN T/CONC WITH T/TACTILE WARNING STRIP; GRIND CONCRETE IF STEP EXCEEDS 1/8".

5 TYPICAL PRECAST AT TRACK EDGE

1 1/2" = 1'-0"

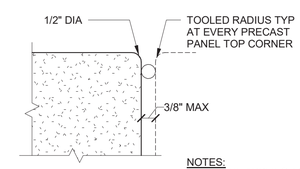

NOTES:
1. DETAIL APPLIES TO TOP CORNERS OF PRECAST PANELS.

6 TYPICAL TOP CORNER RADIUS

6" = 1'-0"

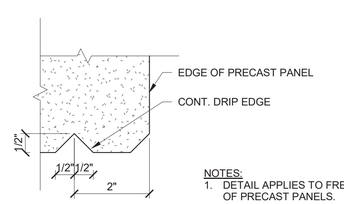

NOTES:
1. DETAIL APPLIES TO FREE EDGE OF PRECAST PANELS.

7 TYPICAL DRIP EDGE DETAIL

6" = 1'-0"

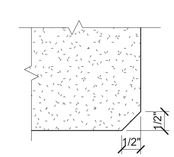

NOTES:
1. DETAIL APPLIES TO SIDES/BOTTOM CORNERS OF PRECAST PANELS.

8 TYPICAL SIDES AND BOTTOM CHAMFER DETAIL

6" = 1'-0"

DESIGN BY:									
DRAWN BY:									
CHECKED BY:									
APPROVED BY:			01/27/2020	ISSUE FOR BID	CJB	MW	TRM		
CDOT/APPROVED BY:		NO.	DATE	REVISIONS	DES.	DRW.	CHK.	DCCO	CDOT

SIMPSON GUMPERTZ & HEGER
Engineering of Structures and Building Enclosures
Simpson Gumpertz & Heger Inc.
135 South LaSalle Street, Suite 3800
Chicago, Illinois 60603
main: 312.754.7500 fax: 312.754.7501
www.sgh.com

PERKINS+WILL
The Wrigley Building
410 North Michigan Ave.
Suite 1600
Chicago, IL 60611
t 312.755.0770
f 312.755.0775
www.perkinswill.com

CDOT
CHICAGO DEPARTMENT OF TRANSPORTATION
DIVISION OF ENGINEERING

154 N DAMEN AVE - DAMEN GREEN LINE STATION

PLATFORM - PRECAST SECTIONS

CDOT PROJECT D-7-135 | DATE: 01/27/2020

SPEC. NO.

DRAWING NO. **S41-40**

REVISION NO.

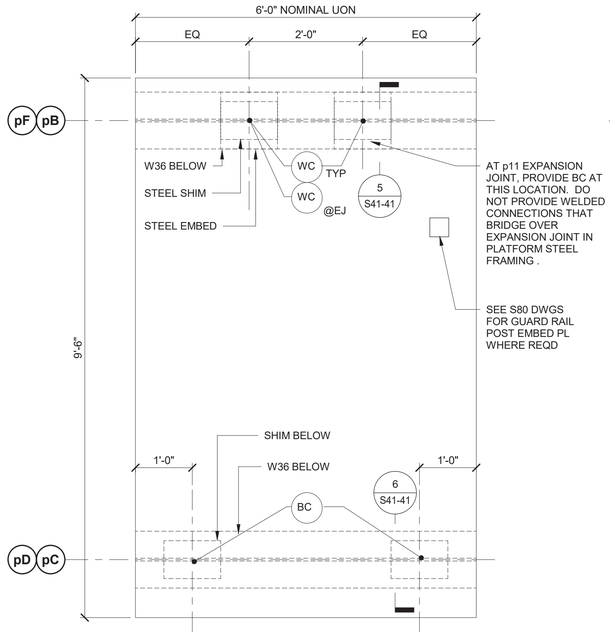

1 PRECAST CONNECTION PLAN - PLATFORM
NTS

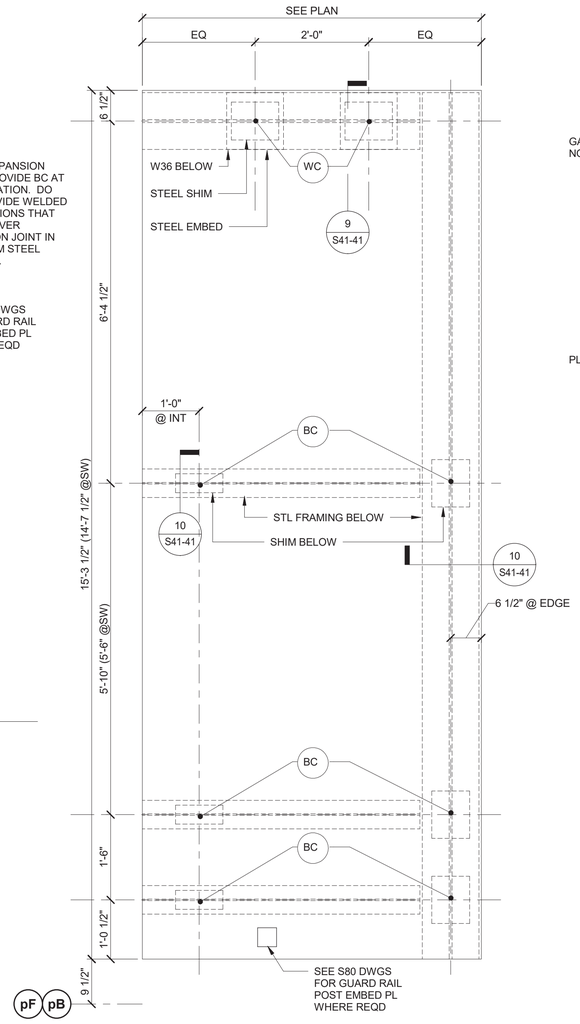

3 PRECAST CONNECTION PLAN - STAIR PLATFORM
NTS

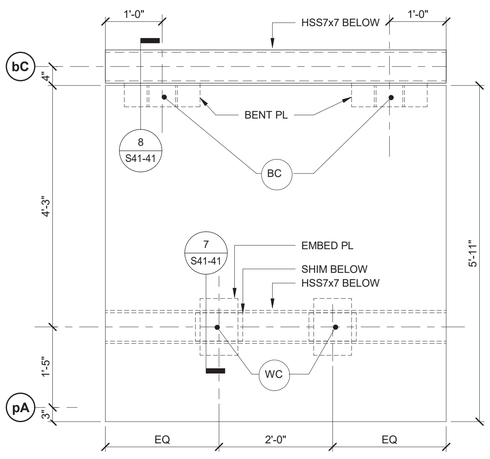

2 PRECAST CONNECTION PLAN - NORTH END
NTS

SHEET NOTES:

1. (WC) INDICATES WELDED CONNECTION. SEE 5/S41-41, 7/S41-41, & 9/S41-41
2. (BC) INDICATES BEARING CONNECTION. SEE 6/S41-41, 8/S41-41, & 10/S41-41
3. ADHERE BEARING PADS TO STEEL STRUCTURE WITH MANUFACTURER'S STANDARD EXPOSY ADEHSIVE (FABREEKA #700 OR APPROVED EQUIVALENT).
4. BEARING PAD SIZE TO MATCH SIZE OF SUPPORTING STEEL MEMBER.
5. SEE GENERAL NOTES FOR ADDITIONAL INFORMATION ON BEARING PADS.

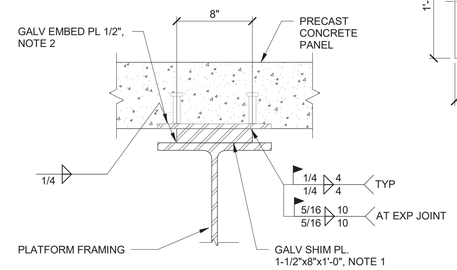

NOTES:
1. REDUCE WIDTH TO 4" IF SHIM CONFLICTS WITH PLAN BRACING.
2. SEE DETAIL A FOR TYPICAL EMBED PLATE AND DETAIL B FOR EXPANSION JOINT EMBED PLATE. EMBED PL DIMENSIONS SHOWN ARE MINIMUM. GC TO MODIFY AS NECESSARY FOR INSTALLATION.

5 WELDED CONNECTION - PLATFORM
1 1/2" = 1'-0"

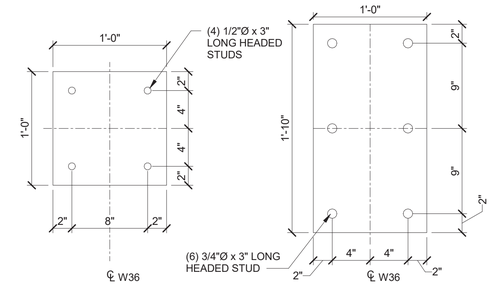

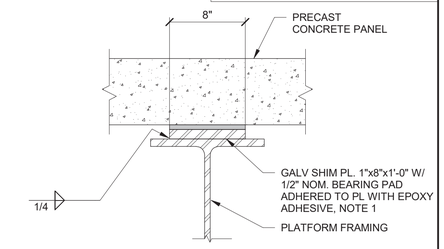

NOTES:
1. REDUCE WIDTH TO 4" IF SHIM CONFLICTS WITH PLAN BRACING.

6 BEARING CONNECTION - PLATFORM
1 1/2" = 1'-0"

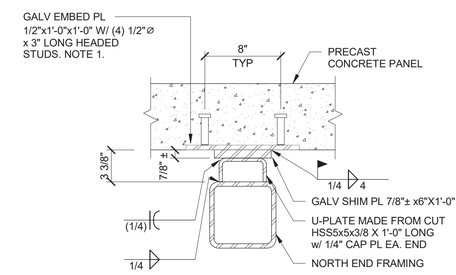

NOTES:
1. EMBED PL DIMENSIONS SHOWN ARE MINIMUM. GC TO MODIFY AS NECESSARY FOR INSTALLATION.

7 WELDED CONNECTION - NORTH END
1 1/2" = 1'-0"

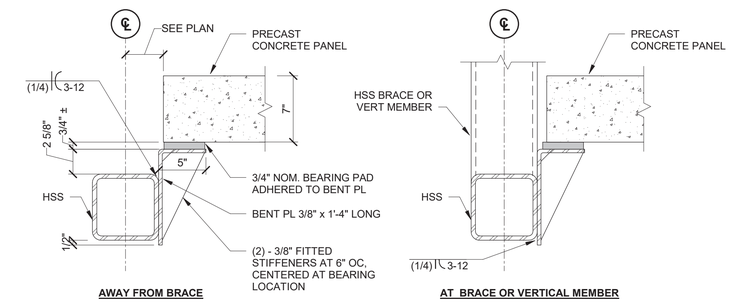

8 BEARING CONNECTION - NORTH END
1 1/2" = 1'-0"

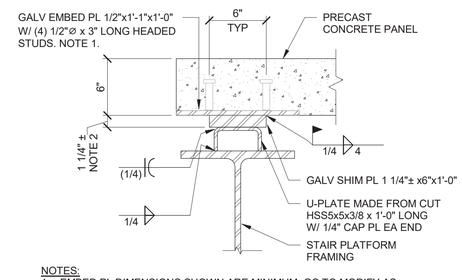

NOTES:
1. EMBED PL DIMENSIONS SHOWN ARE MINIMUM. GC TO MODIFY AS NECESSARY FOR INSTALLATION.
2. FIELD VERIFY SHIM PL THICKNESS TO ACCOUNT FOR DEAD LOAD DEFLECTION IN STAIR PLATFORM ASSEMBLY.

9 WELDED CONNECTION - STAIR PLATFORM
1 1/2" = 1'-0"

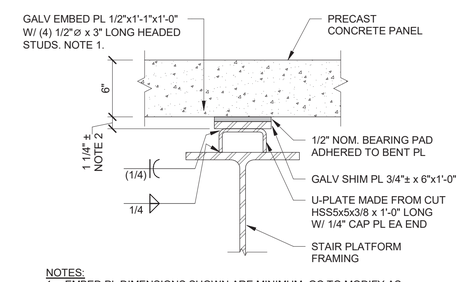

NOTES:
1. EMBED PL DIMENSIONS SHOWN ARE MINIMUM. GC TO MODIFY AS NECESSARY FOR INSTALLATION.
2. FIELD VERIFY SHIM PL / BEARING PADTHICKNESS TO ACCOUNT FOR DEAD LOAD DEFLECTION IN STAIR PLATFORM ASSEMBLY.

10 BEARING CONNECTION - STAIR PLATFORM
1 1/2" = 1'-0"

DESIGN BY:									
DRAWN BY:									
CHECKED BY:									
APPROVED BY:			01/27/2020	ISSUE FOR BID	EJT	HMM	TRM		
CDOT/APPROVED BY:		NO.	DATE	REVISIONS	DES.	DRW.	CHK.	DCCO	CDOT

SIMPSON GUMPERTZ & HEGER
Engineering of Structures and Building Enclosures
Simpson Gumpertz & Heger Inc.
135 South LaSalle Street, Suite 3800
Chicago, Illinois 60603
main: 312.754.7500 fax: 312.754.7501
www.sgh.com

PERKINS+WILL
The Wrigley Building
410 North Michigan Ave.
Suite 1600
Chicago, IL 60611
t 312.755.0770
f 312.755.0775
www.perkinswill.com

CDOT
CHICAGO DEPARTMENT OF TRANSPORTATION
DIVISION OF ENGINEERING

154 N DAMEN AVE - DAMEN GREEN LINE STATION

PLATFORM - PRECAST CONNECTION PLAN

CDOT PROJECT D-7-135 | DATE: 01/27/2020

SPEC. NO.

DRAWING NO. S41-41

REVISION NO.

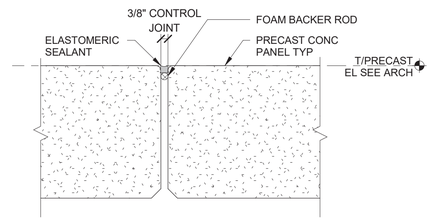

1 TYPICAL PRECAST CONTROL JOINT
3" = 1'-0"

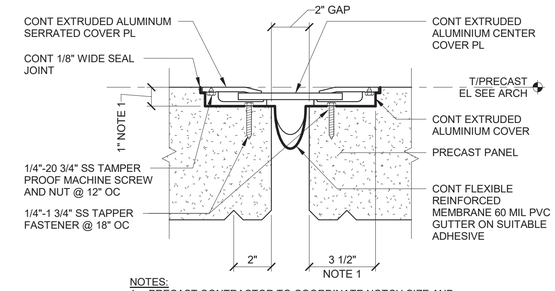

NOTES:
1. PRECAST CONTRACTOR TO COORDINATE NOTCH SIZE AND LOCATION WITH EXPANSION JOINT MANUFACTURER.
2. DETAIL BASED ON CTA DETAIL 4/GA-501.
3. DESIGN JOINT COVER TO ACCOMMODATE 2" +/- OF MOVEMENT PERPENDICULAR TO THE JOINT

2 TYPICAL PRECAST EXPANSION JOINT
3" = 1'-0"

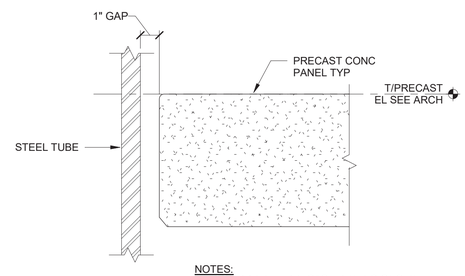

NOTES:
1. COORDINATE PRECAST DIMENSIONS WITH STEEL SHOP DRAWINGS.

3 TYPICAL PRECAST-TO-STEEL JOINT
3" = 1'-0"

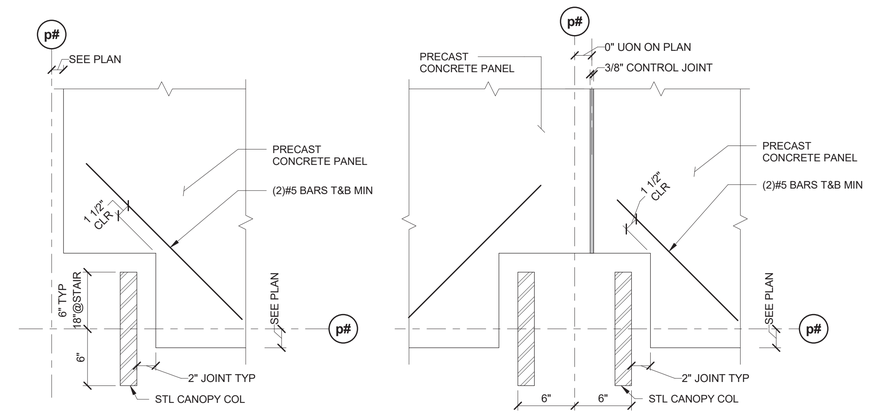

4 TYPICAL PRECAST NOTCH DETAILS
1 1/2" = 1'-0"

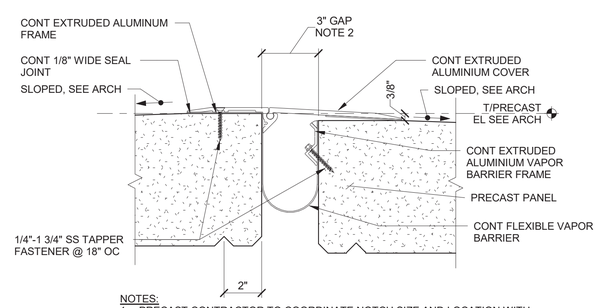

NOTES:
1. PRECAST CONTRACTOR TO COORDINATE NOTCH SIZE AND LOCATION WITH EXPANSION JOINT MANUFACTURER.
2. JOINT TO ACCOMMODATE 3/8" +/- VERTICAL DIFFERENTIAL MOVEMENT, 1" DIFFERENTIAL MOVEMENT PERPENDICULAR TO THE JOINT AND 3/4" DIFFERENTIAL MOVEMENT PARALLEL TO THE JOINT

5 PRECAST TO PRECAST EXPANSION JOINT WITH VERTICAL MOVEMENT
3" = 1'-0"

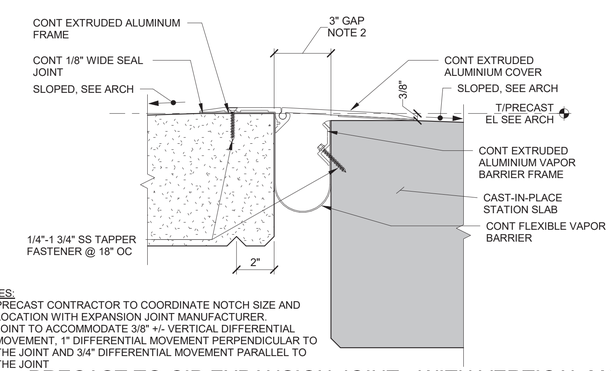

NOTES:
1. PRECAST CONTRACTOR TO COORDINATE NOTCH SIZE AND LOCATION WITH EXPANSION JOINT MANUFACTURER.
2. JOINT TO ACCOMMODATE 3/8" +/- VERTICAL DIFFERENTIAL MOVEMENT, 1" DIFFERENTIAL MOVEMENT PERPENDICULAR TO THE JOINT AND 3/4" DIFFERENTIAL MOVEMENT PARALLEL TO THE JOINT

6 PRECAST TO CIP EXPANSION JOINT - WITH VERTICAL MOVEMENT
3" = 1'-0"

DESIGN BY:									
DRAWN BY:									
CHECKED BY:									
APPROVED BY:			01/27/2020	ISSUE FOR BID	EJT	HMM	TRM		
CDOT/APPROVED BY:		NO.	DATE	REVISIONS	DES.	DRW.	CHK.	DCCO	CDOT

SIMPSON GUMPERTZ & HEGER
Engineering of Structures and Building Enclosures
Simpson Gumpertz & Heger Inc.
135 South LaSalle Street, Suite 3800
Chicago, Illinois 60603
main: 312.754.7500 fax: 312.754.7501
www.sgh.com

PERKINS+WILL
The Wrigley Building
410 North Michigan Ave.
Suite 1600
Chicago, IL 60611
t 312.755.0770
f 312.755.0775
www.perkinswill.com

CDOT
CHICAGO DEPARTMENT OF TRANSPORTATION
DIVISION OF ENGINEERING

154 N DAMEN AVE - DAMEN GREEN LINE STATION

PLATFORM - PRECAST DETAILS

CDOT PROJECT D-7-135 | DATE: 01/27/2020

SPEC. NO.

DRAWING NO. **S41-42**

REVISION NO.

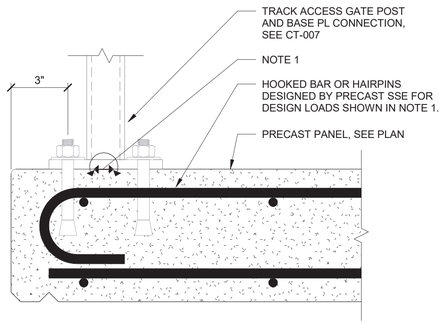

NOTES:
1. FACTORED DESIGN LOADS:
   A. MOMENT = 2.5 K-FT (ANY DIRECTION)
   B. SHEAR = 500 LBF (ANY DIRECTION)

1 DETAIL - TRACK ACCESS GATE
3" = 1'-0"

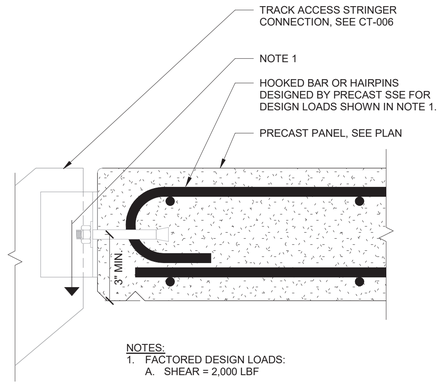

NOTES:
1. FACTORED DESIGN LOADS:
   A. SHEAR = 2,000 LBF

2 DETAIL - TRACK ACCESS STRINGER
3" = 1'-0"

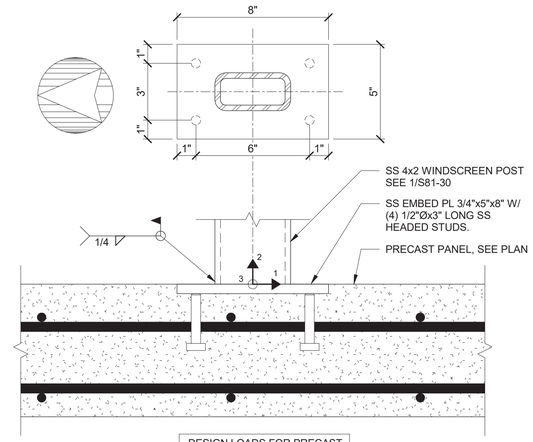

DESIGN LOADS FOR PRECAST SSE DESIGN (FACTORED)		
	FORCE (KIP)	MOMENT (KIP-FT)
1	±3.2	±0.7
2	+1.2/-0.5	±0.3
3	±0.5	±2.2

NOTES:
1. SEE ARCH DWGS FOR LOCATION OF WINDSCREEN EMBED POSTS

3 DETAIL - WINDSCREEN EMBED PLATE
3" = 1'-0"

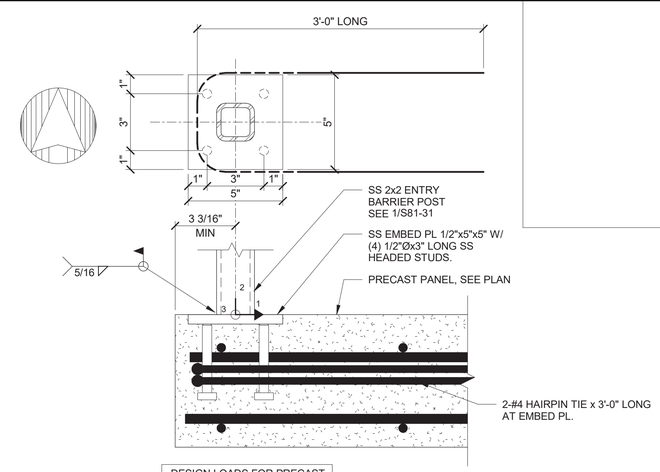

DESIGN LOADS FOR PRECAST SSE DESIGN (FACTORED)		
	FORCE (KIP)	MOMENT (KIP-FT)
1	--	±2.0
2	-0.9	--
3	±0.9	--

NOTES:
1. SEE ARCH DWGS FOR LOCATION OF ENTRY BARRIER POSTS

4 DETAIL - ENTRY BARRIER TYPICAL EMBED PLATE
3" = 1'-0"

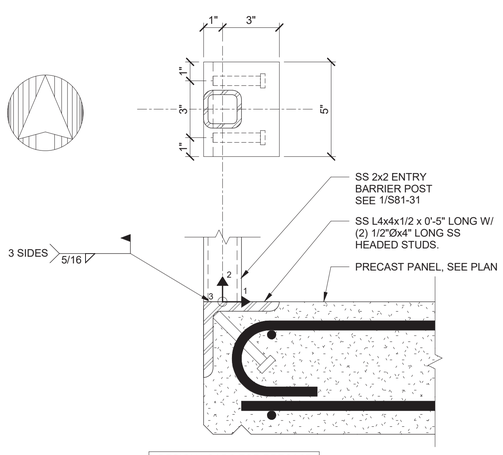

DESIGN LOADS FOR PRECAST SSE DESIGN (FACTORED)		
	FORCE (KIP)	MOMENT (KIP-FT)
1	--	±2.0
2	-0.7	--
3	±0.9	--

NOTES:
1. SEE ARCH DWGS FOR LOCATION OF ENTRY BARRIER POSTS

5 DETAIL - ENTRY BARRIER EDGE EMBED PLATE
3" = 1'-0"

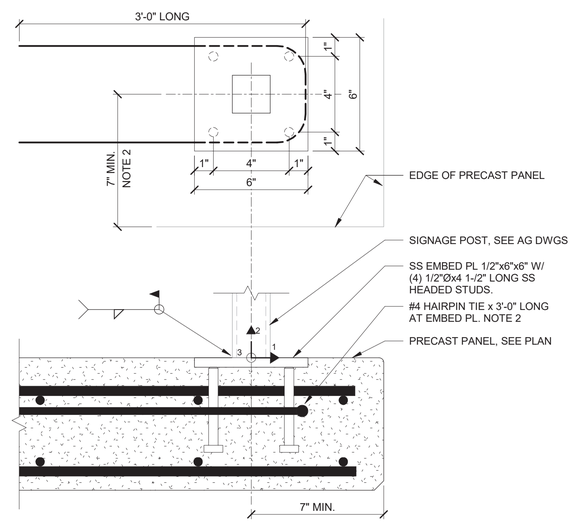

DESIGN LOADS FOR PRECAST SSE DESIGN (FACTORED)		
	FORCE (KIP)	MOMENT (KIP-FT)
1	±1.2	--
2	-0.34	--
3	--	±5.6

NOTES:
1. SEE ARCH DWGS FOR LOCATION OF TRANSIT PANEL POSTS.
2. PROVIDE ADD'L #4 HAIRPIN IN E/W DIRECTION IF CL OF EMBED PL IS LESS THAN 12" FROM EDGE OF PRECAST PANEL.

6 DETAIL - TRANSIT PANEL EMBED PLATE
3" = 1'-0"

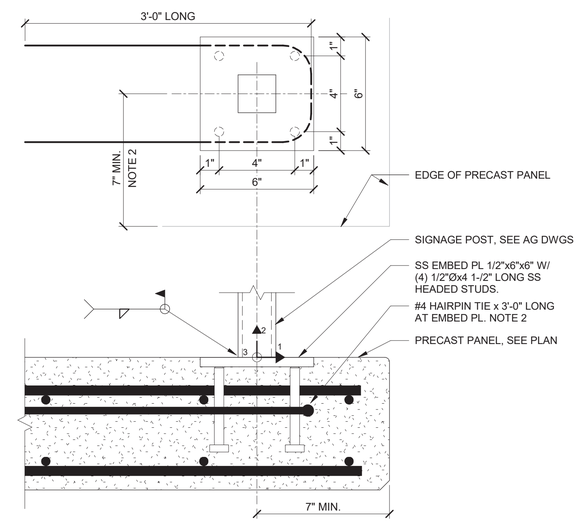

DESIGN LOADS FOR PRECAST SSE DESIGN (FACTORED)		
	FORCE (KIP)	MOMENT (KIP-FT)
1	±.250	--
2	-0.08	--
3	--	±2.0

NOTES:
1. SEE ARCH DWGS FOR LOCATION OF DIGITAL ADVERTISING POSTS.
2. PROVIDE ADD'L #4 HAIRPIN IN E/W DIRECTION IF CL OF EMBED PL IS LESS THAN 12" FROM EDGE OF PRECAST PANEL.
3. SIMILAR DETAIL APPLIES TO BRAILE SIGNAGE POSTS.

7 DETAIL - DIGITAL ADVERTISING EMBED PLATE
3" = 1'-0"

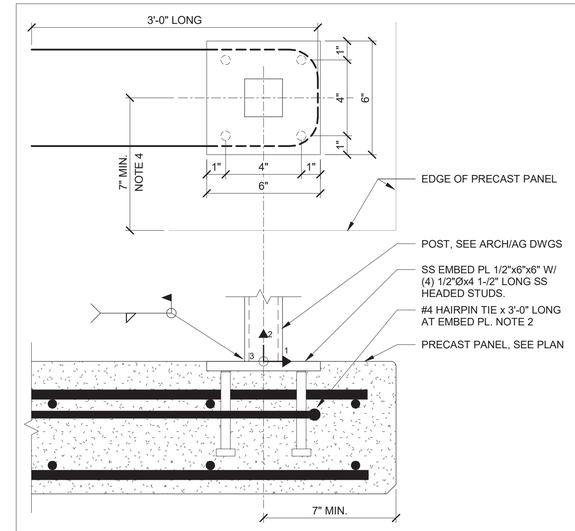

DESIGN LOADS FOR PRECAST SSE DESIGN (FACTORED)		
	FORCE (KIP)	MOMENT (KIP-FT)
1	±.500	±2.0
2	--	--
3	±.500	±2.0

NOTES:
1. TYPICAL DETAIL PROVIDED FOR EMBED PL LOCATIONS NOT SPECIFICALLY IDENTIFIED ON THE STRUCTURAL DRAWINGS.
2. SEE ARCH DWGS FOR LOCATION OF POSTS.
3. GC/MANUFACTURER TO VERIFY IMPOSED LOADS ARE LESS THAN FACTORED DESIGN LOADS PROVIDED.
4. PROVIDE ADD'L #4 HAIRPIN IN E/W DIRECTION IF CL OF EMBED PL IS LESS THAN 12" FROM EDGE OF PRECAST PANEL.

8 TYPICAL EMBED PLATE
3" = 1'-0"

DESIGN BY:								
DRAWN BY:								
CHECKED BY:								
APPROVED BY:			01/27/2020	ISSUE FOR BID	EJT	HMM	TRM	
CDOT/APPROVED BY:		NO.	DATE	REVISIONS	DES.	DRW.	CHK.	DCCO	CDOT

SIMPSON GUMPERTZ & HEGER
Engineering of Structures and Building Enclosures
Simpson Gumpertz & Heger Inc.
135 South LaSalle Street, Suite 3800
Chicago, Illinois 60603
main: 312.754.7500 fax: 312.754.7501
www.sgh.com

PERKINS+WILL
The Wrigley Building
410 North Michigan Ave.
Suite 1600
Chicago, IL 60611
t 312.755.0770
f 312.755.0775
www.perkinswill.com

CDOT
CHICAGO DEPARTMENT OF TRANSPORTATION
DIVISION OF ENGINEERING

154 N DAMEN AVE - DAMEN GREEN LINE STATION

PLATFORM - PRECAST DETAILS

CDOT PROJECT D-7-135 | DATE: 01/27/2020

SPEC. NO.

DRAWING NO. **S41-43**

REVISION NO.

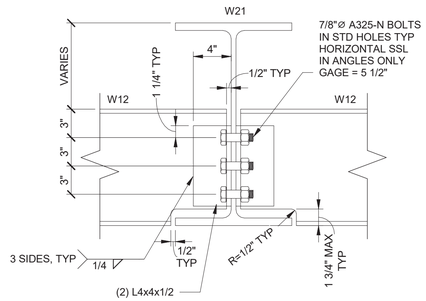

1 TYPICAL W12 TO W21

1 1/2" = 1'-0"

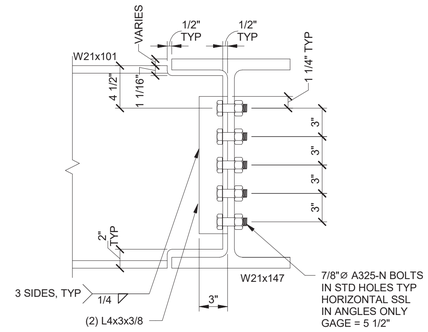

2 TYPICAL W21x101 TO W21x147

1 1/2" = 1'-0"

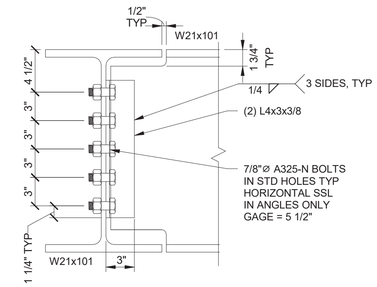

3 W21x101 TO W21x101

1 1/2" = 1'-0"

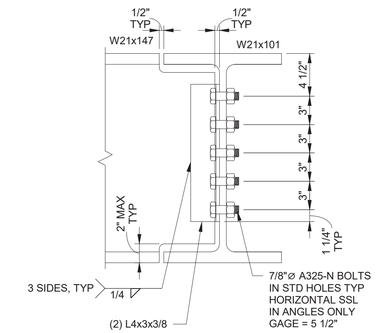

4 W21x147 TO W21x101

1 1/2" = 1'-0"

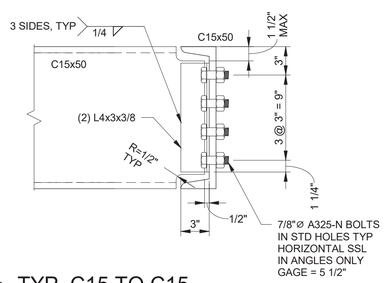

5 TYP. C15 TO C15

1 1/2" = 1'-0"

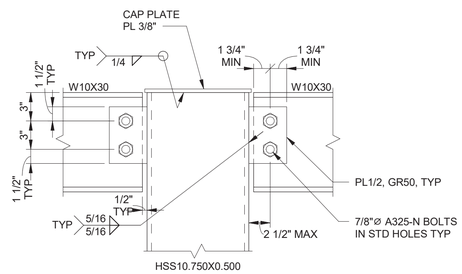

6 TYP W10x30 TO HSS10.750x0.500

1 1/2" = 1'-0"

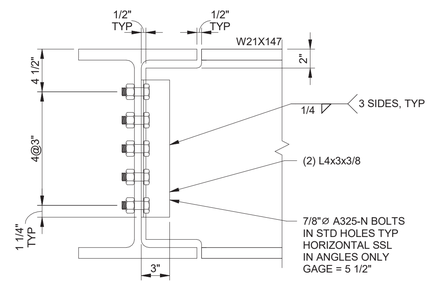

7 TYP W21x147 TO W21x147

1 1/2" = 1'-0"

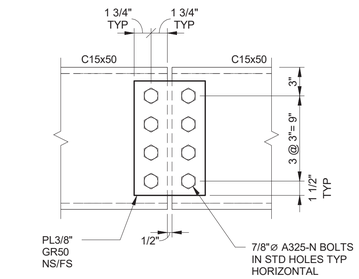

8 TYP CHANNEL SPLICE

1 1/2" = 1'-0"

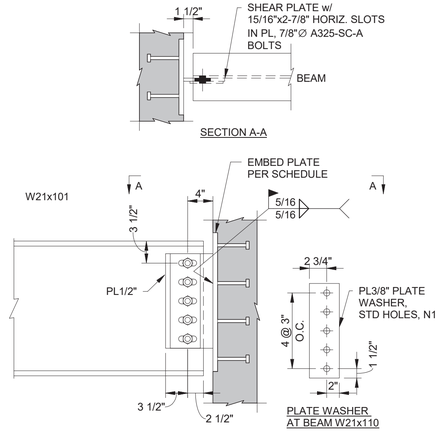

NOTES:
N1. WHERE REQUIRED, FLIP PLATE WASHER IN FIELD TO COVER SLOTS

9 BEAM TO EMBED CONNECTION

1" = 1'-0"

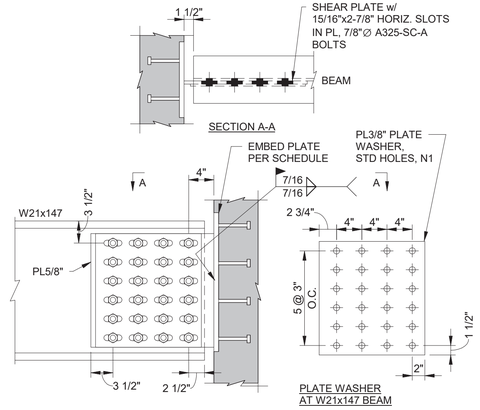

NOTES:
N1. WHERE REQUIRED, FLIP PLATE WASHER IN FIELD TO COVER SLOTS

10 BEAM TO EMBED CONNECTION

1" = 1'-0"

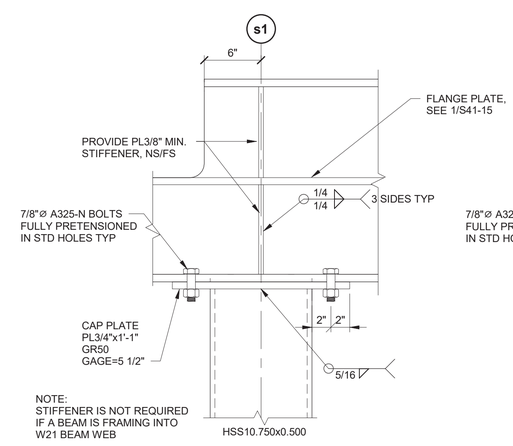

NOTE:
STIFFENER IS NOT REQUIRED
IF A BEAM IS FRAMING INTO
W21 BEAM WEB

11 W21x101 TO CAP PLATE

1 1/2" = 1'-0"

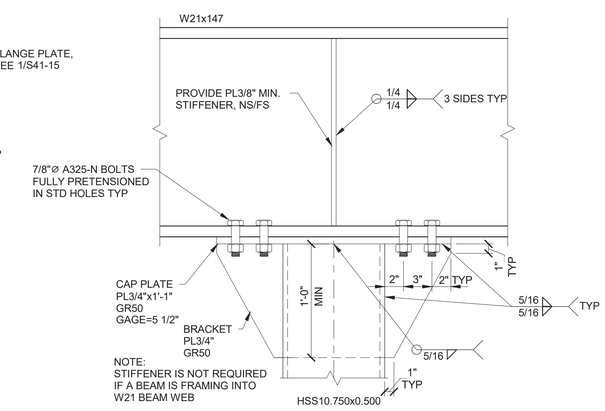

NOTE:
STIFFENER IS NOT REQUIRED
IF A BEAM IS FRAMING INTO
W21 BEAM WEB

12 W21x147 TO CAP PLATE

1 1/2" = 1'-0"

DESIGN BY:									
DRAWN BY:									
CHECKED BY:									
APPROVED BY:			01/27/2020	ISSUE FOR BID	CD	CC	TRM		
CDOT/APPROVED BY:		NO.	DATE	REVISIONS	DES.	DRW.	CHK.	DCCO	CDOT

SIMPSON GUMPERTZ & HEGER
Engineering of Structures and Building Enclosures
Simpson Gumpertz & Heger Inc.
135 South LaSalle Street, Suite 3800
Chicago, Illinois 60603
main: 312.754.7500 fax: 312.754.7501
www.sgh.com

PERKINS+WILL
The Wrigley Building
410 North Michigan Ave.
Suite 1600
Chicago, IL 60611
t 312.755.0770
f 312.755.0775
www.perkinswill.com

CDOT
CHICAGO DEPARTMENT OF TRANSPORTATION
DIVISION OF ENGINEERING

154 N DAMEN AVE - DAMEN GREEN LINE STATION

STATION HOUSE CONNECTION DETAILS

CDOT PROJECT D-7-135 | DATE: 01/27/2020

SPEC. NO.

DRAWING NO. **S42-10**

REVISION NO.

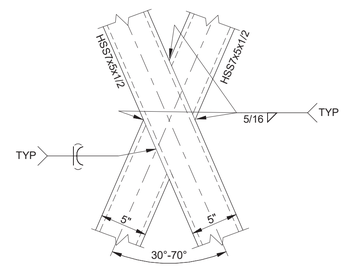

1 TOWER TRUSS CONNECTION
1 1/2" = 1'-0"

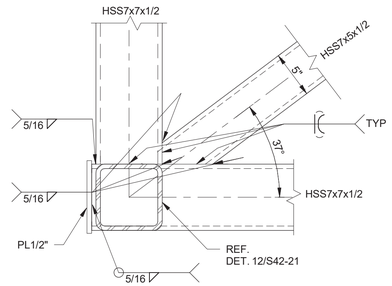

2 TOWER TRUSS CONNECTION
1 1/2" = 1'-0"

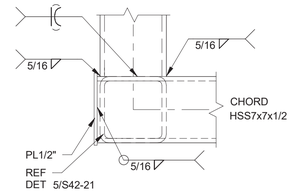

3 TOWER TRUSS CONNECTION
1 1/2" = 1'-0"

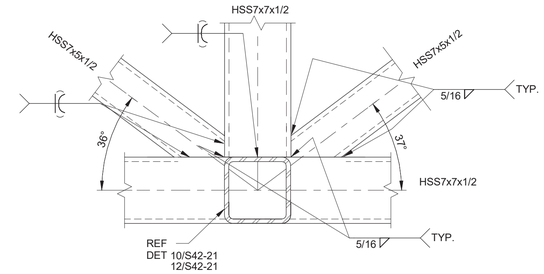

4 TOWER TRUSS CONNECTION
1 1/2" = 1'-0"

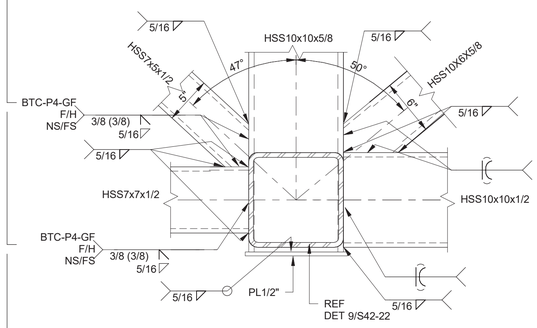

5 TOWER TRUSS CONNECTION
1 1/2" = 1'-0"

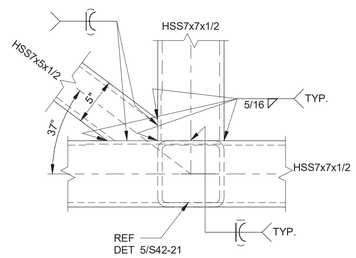

6 TOWER TRUSS CONNECTION
1 1/2" = 1'-0"

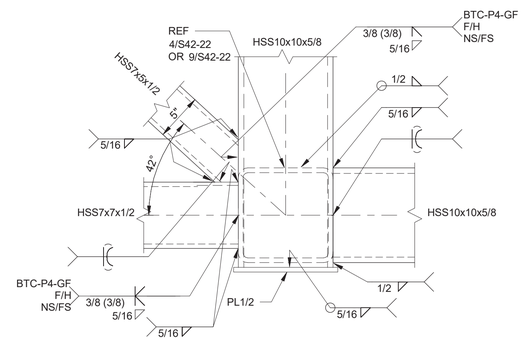

7 TOWER TRUSS CONNECTION
1 1/2" = 1'-0"

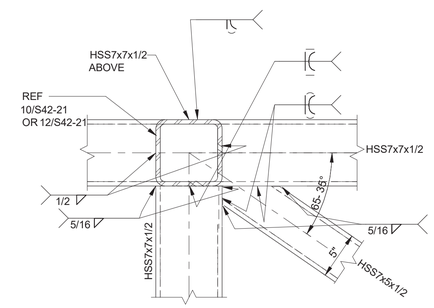

8 TOWER TRUSS CONNECTION
1 1/2" = 1'-0"

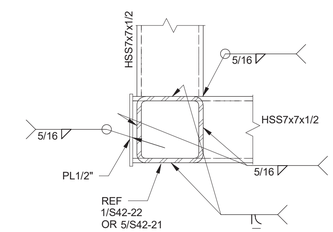

9 TOWER TRUSS CONNECTION
1 1/2" = 1'-0"

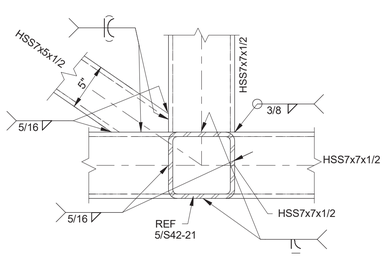

10 TOWER TRUSS CONNECTION
1 1/2" = 1'-0"

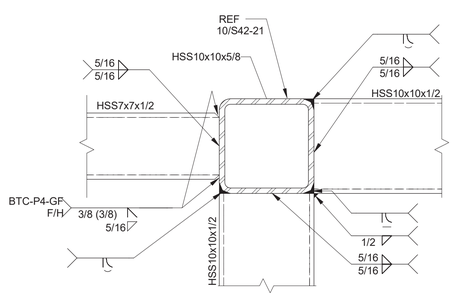

NOTE: PJP EAST/WEST HSS10x10 TO VERTICAL HSS.
OVERLAPPING FILLET WELD ON NORTH/SOUTH HSS

11 TOWER TRUSS CONNECTION
1 1/2" = 1'-0"

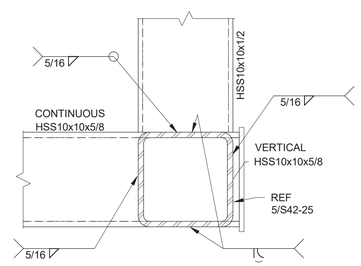

NOTE: PJP HSS10x10x5/8 TO VERTICAL HSS.
OVERLAPPING FILLET WELD ON HSS10x10x1/2

12 TOWER TRUSS CONNECTION
1 1/2" = 1'-0"

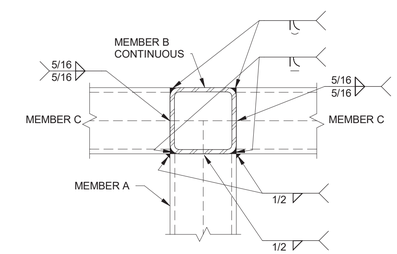

TYPICAL WELD AT TRUSS INTERSECTION

NOTES:
1. CONNECTIONS DESIGNED. NO FURTHER ANALYSIS REQUIRED.
2. GMAW OR FCAW-G (BTC-P10-GF) WELDING PROCESSES AT TOWER TRUSS CONNECTIONS, UON.

LEGEND

DESIGN BY:									
DRAWN BY:									
CHECKED BY:									
APPROVED BY:			01/27/2020	ISSUE FOR BID	CD	CC	TRM		
CDOT/APPROVED BY:		NO.	DATE	REVISIONS	DES.	DRW.	CHK.	DCCO	CDOT

SIMPSON GUMPERTZ & HEGER
Engineering of Structures and Building Enclosures
Simpson Gumpertz & Heger Inc.
135 South LaSalle Street, Suite 3800
Chicago, Illinois 60603
main: 312.754.7500 fax: 312.754.7501
www.sgh.com

PERKINS+WILL
The Wrigley Building
410 North Michigan Ave.
Suite 1600
Chicago, IL 60611
t 312.755.0770
f 312.755.0775
www.perkinswill.com

CDOT
CHICAGO DEPARTMENT OF TRANSPORTATION
DIVISION OF ENGINEERING

154 N DAMEN AVE - DAMEN GREEN LINE STATION

TOWER STEEL CONNECTION DETAILS

CDOT PROJECT D-7-135 | DATE: 01/27/2020

SPEC. NO.

DRAWING NO. **S42-20**

REVISION NO.

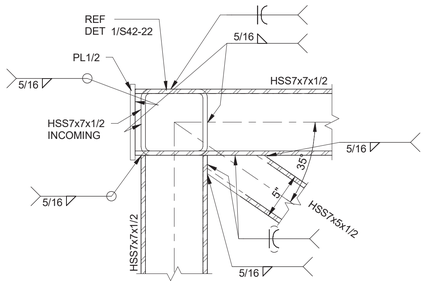

1 TOWER TRUSS CONNECTION
1 1/2" = 1'-0"

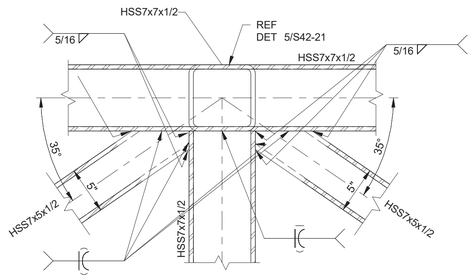

2 TOWER TRUSS CONNECTION
1 1/2" = 1'-0"

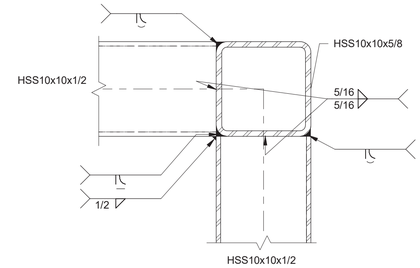

NOTE: ORDER OF WELDING AT FABRICATORS DISCRETION

3 TOWER TRUSS CONNECTION
1 1/2" = 1'-0"

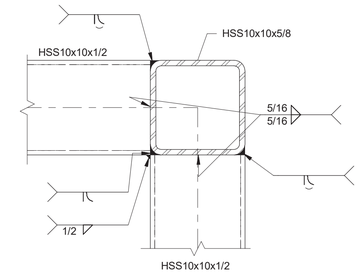

NOTE: PJP EAST/WEST HSS.
OVERLAPPING FILLET WELD ON NORTH/SOUTH HSS.

4 TOWER TRUSS CONNECTION
1 1/2" = 1'-0"

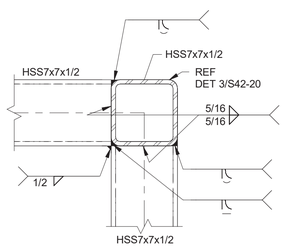

NOTE: PJP VERTICAL MEMBER
OVERLAPPING FILLET WELD ON HORIZONTAL MEMBER

5 TOWER TRUSS CONNECTION
1 1/2" = 1'-0"

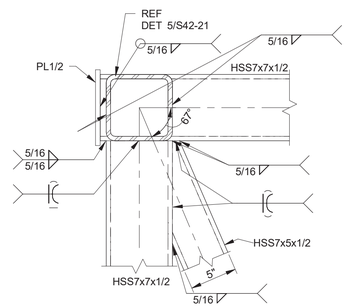

6 TOWER TRUSS CONNECTION
1 1/2" = 1'-0"

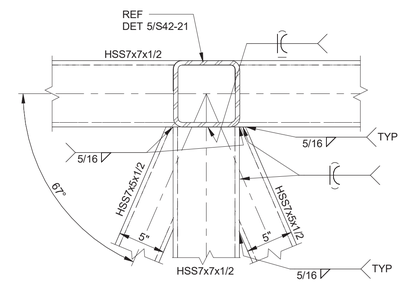

7 TOWER TRUSS CONNECTION
1 1/2" = 1'-0"

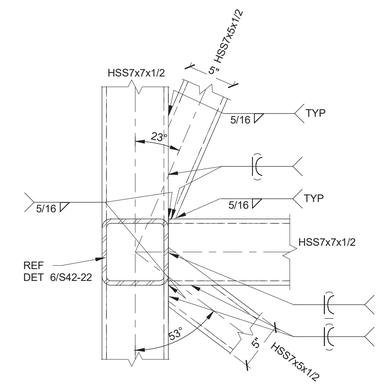

8 TOWER TRUSS CONNECTION
1 1/2" = 1'-0"

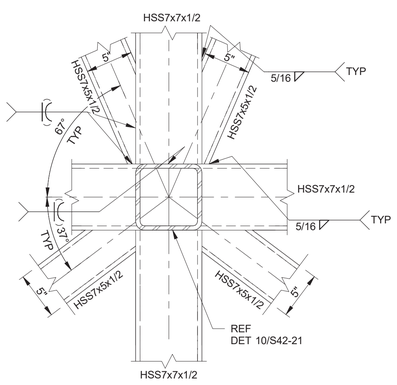

9 TOWER TRUSS CONNECTION
1 1/2" = 1'-0"

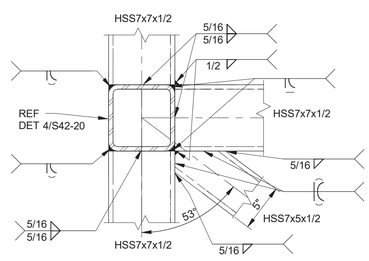

NOTE: PJP HORIZONTAL MEMBER
OVERLAPPING FILLET WELD ON VERTICAL MEMBERS

10 TOWER TRUSS CONNECTION
1 1/2" = 1'-0"

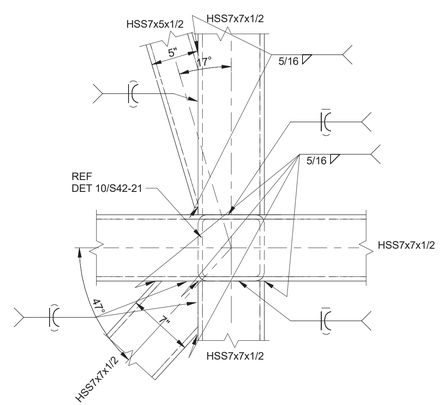

11 TOWER TRUSS CONNECTION
1 1/2" = 1'-0"

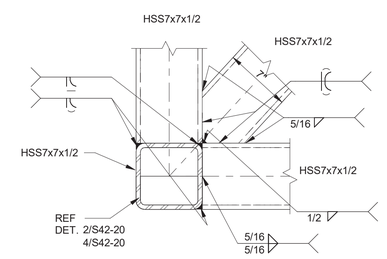

NOTE: PJP HORIZONTAL MEMBER.
OVERLAPPING FILLET WELD ON VERTICAL MEMBERS

12 TOWER TRUSS CONNECTION
1 1/2" = 1'-0"

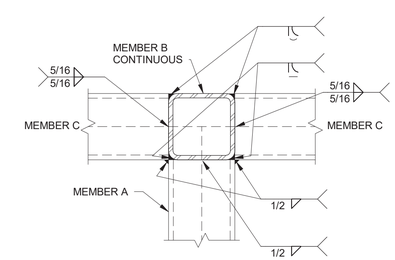

TYPICAL WELD AT TRUSS INTERSECTION

NOTES:
1. CONNECTIONS DESIGNED. NO FURTHER ANALYSIS REQUIRED.
2. GMAW OR FCAW-G (BTC-P10-GF) WELDING PROCESSES AT TOWER TRUSS CONNECTIONS, UON.

LEGEND

DESIGN BY:									
DRAWN BY:									
CHECKED BY:									
APPROVED BY:			01/27/2020	ISSUE FOR BID	CD	CC	TRM		
CDOT/APPROVED BY:		NO.	DATE	REVISIONS	DES.	DRW.	CHK.	DCCO	CDOT

SIMPSON GUMPERTZ & HEGER
Engineering of Structures and Building Enclosures
Simpson Gumpertz & Heger Inc.
135 South LaSalle Street, Suite 3800
Chicago, Illinois 60603
main: 312.754.7500 fax: 312.754.7501
www.sgh.com

PERKINS+WILL
The Wrigley Building
410 North Michigan Ave.
Suite 1600
Chicago, IL 60611
t 312.755.0770
f 312.755.0775
www.perkinswill.com

CDOT
CHICAGO DEPARTMENT OF TRANSPORTATION
DIVISION OF ENGINEERING

154 N DAMEN AVE - DAMEN GREEN LINE STATION

TOWER STEEL CONNECTION DETAILS

CDOT PROJECT D-7-135 | DATE: 01/27/2020

SPEC. NO.

DRAWING NO. S42-21

REVISION NO.

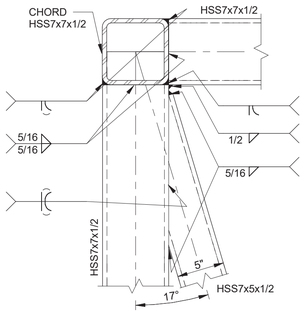

NOTE: PJP HORIZONTAL MEMBER.
OVERLAPPING FILLET WELD ON VERTICAL MEMBER

1 TOWER TRUSS CONNECTION
1 1/2" = 1'-0"

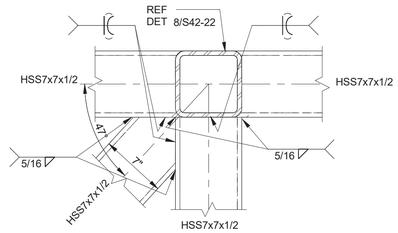

2 TOWER TRUSS CONNECTION
1 1/2" = 1'-0"

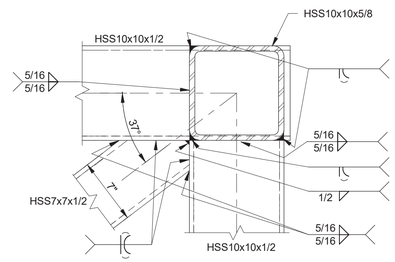

NOTE: PJP EAST/WEST MEMBER TO VERTICAL
OVERLAPPING FILLET ON NORTH/SOUTH MEMBER TO VERTICAL

3 TOWER TRUSS CONNECTION
1 1/2" = 1'-0"

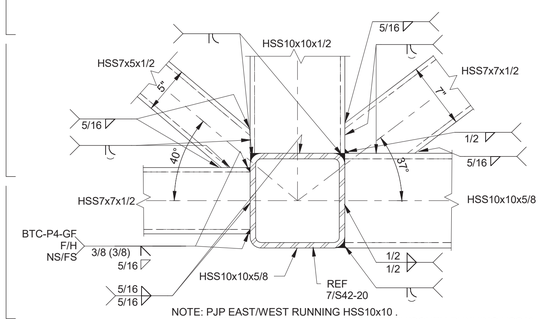

NOTE: PJP EAST/WEST RUNNING HSS10x10 .
OVERLAPPING FILLET WELD ON NORTH/SOUTH RUNNING HSS10x10

4 TOWER TRUSS CONNECTION
1 1/2" = 1'-0"

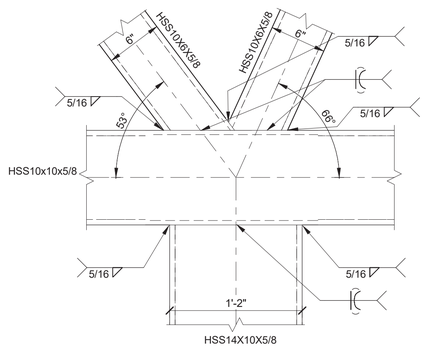

5 TOWER TRUSS CONNECTION
1 1/2" = 1'-0"

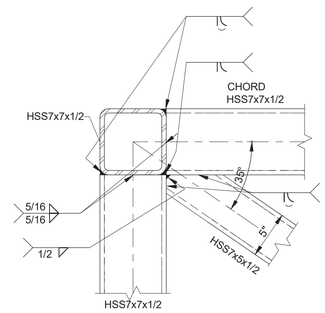

NOTE: PJP CHORD MEMBER.
OVERLAPPING FILLET ON PERPENDICULAR MEMBER

6 TOWER TRUSS CONNECTION
1 1/2" = 1'-0"

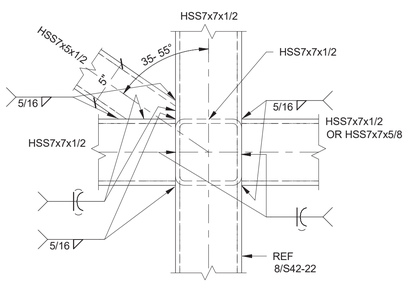

7 TOWER TRUSS CONNECTION
1 1/2" = 1'-0"

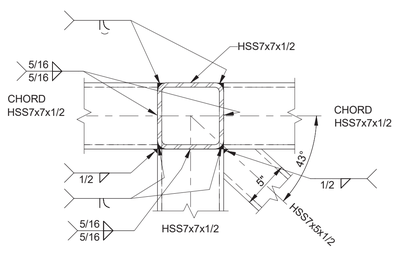

NOTE: PJP CHORD MEMBERS.
OVERLAPPING FILLET ON VERTICAL MEMBER

8 TOWER TRUSS CONNECTION
1 1/2" = 1'-0"

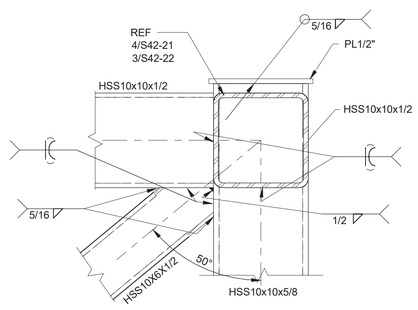

9 TOWER TRUSS CONNECTION
1 1/2" = 1'-0"

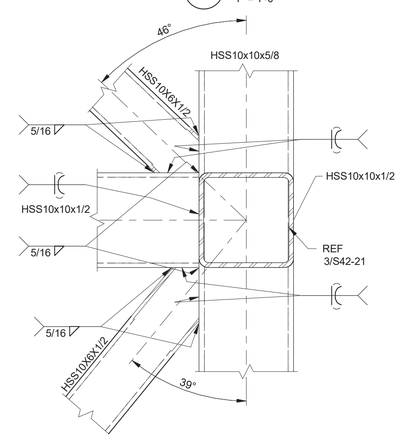

10 TOWER TRUSS CONNECTION
1 1/2" = 1'-0"

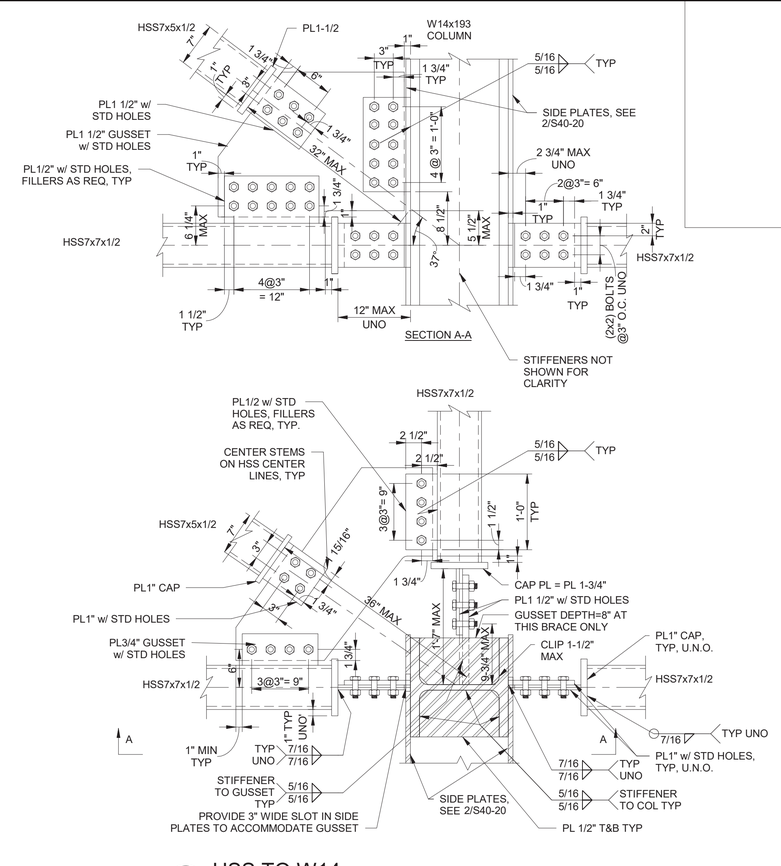

11 HSS TO W14
1" = 1'-0"

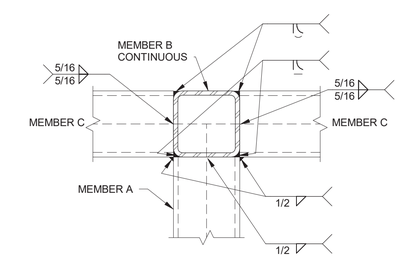

TYPICAL WELD AT TRUSS INTERSECTION

NOTES:
1. CONNECTIONS DESIGNED. NO FURTHER ANALYSIS REQUIRED.
2. GMAW OR FCAW-G (BTC-P10-GF) WELDING PROCESSES AT TOWER TRUSS CONNECTIONS, UON.

LEGEND

DESIGN BY:									
DRAWN BY:									
CHECKED BY:									
APPROVED BY:			01/27/2020	ISSUE FOR BID	CD	CC	TRM		
CDOT/APPROVED BY:		NO.	DATE	REVISIONS	DES.	DRW.	CHK.	DCCO	CDOT

SIMPSON GUMPERTZ & HEGER
Engineering of Structures and Building Enclosures
Simpson Gumpertz & Heger Inc.
135 South LaSalle Street, Suite 3800
Chicago, Illinois 60603
main: 312.754.7500 fax: 312.754.7501
www.sgh.com

PERKINS+WILL
The Wrigley Building
410 North Michigan Ave.
Suite 1600
Chicago, IL 60611
t 312.755.0770
f 312.755.0775
www.perkinswill.com

CDOT
CHICAGO DEPARTMENT OF TRANSPORTATION
DIVISION OF ENGINEERING

154 N DAMEN AVE - DAMEN GREEN LINE STATION

TOWER STEEL CONNECTION DETAILS

CDOT PROJECT D-7-135 | DATE: 01/27/2020

SPEC. NO.

DRAWING NO. **S42-22**

REVISION NO.

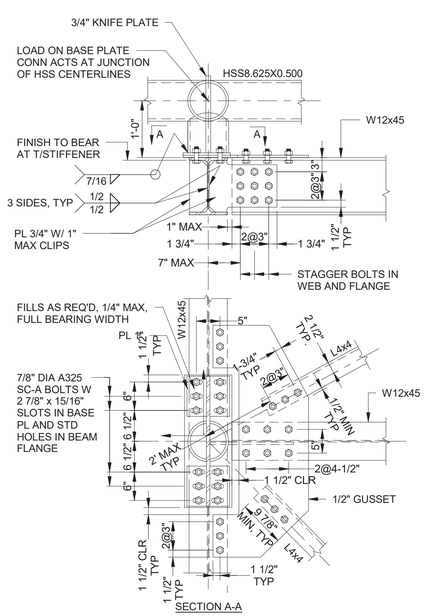

NOTES:
N1. ALL BOLTS ARE 7/8" ∅ A325-N IN STD HOLES, UNO
N2. COVER ALL SLOTTED HOLES W 9" x 5 1/2" x 5/16" WASHER PLATES
N3. FOR ADD'L INFORMATION ON KNIFE PLATE CONNECTION, SEE 2/S42-23

1 L4X4 DIAPHRAGM BRACING W HSS STUB
3/4" = 1'-0"

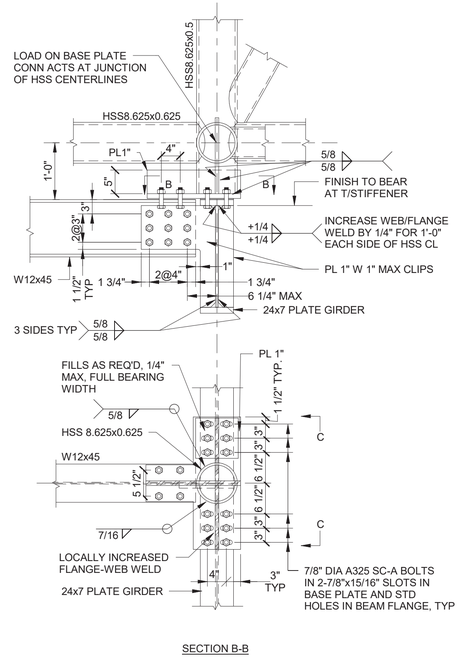

NOTES:
N1. ALL BOLTS ARE 7/8" ∅ A325-N IN STD HOLES, UNO
N2. COVER ALL SLOTTED HOLES W 9" x 5 1/2" x 5/16" WASHER PLATES

2 HSS TRUSS STUB
3/4" = 1'-0"

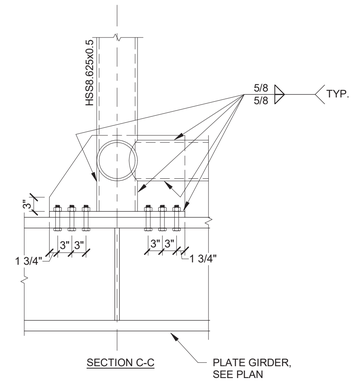

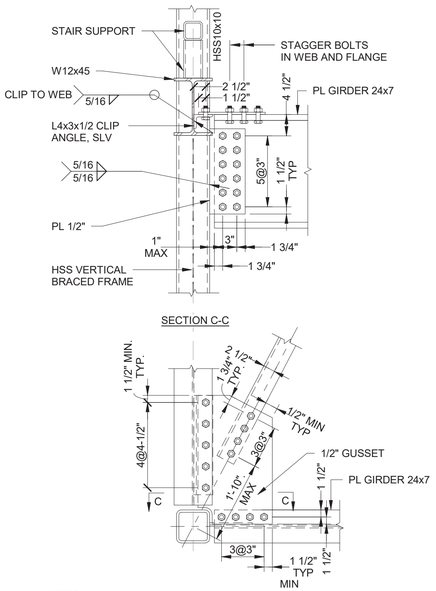

NOTES:
N1. ALL BOLTS ARE 7/8" ∅ A325-N IN STD HOLES, UNO

3 L4X4 CORNER DIAPHRAGM BRACE
3/4" = 1'-0"

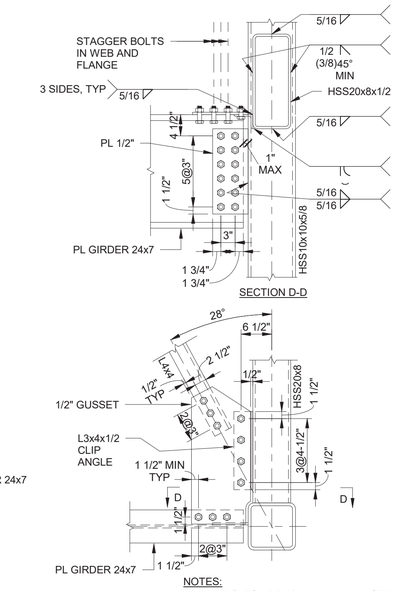

NOTES:
N1. ALL BOLTS ARE 7/8" ∅ A325-N IN STD HOLES

4 L4X4 CORNER DIAPHRAGM BRACE
3/4" = 1'-0"

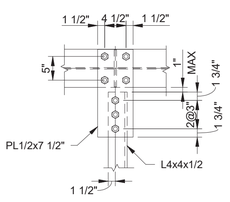

NOTES:
N1. ALL BOLTS ARE 7/8" ∅ A325-N IN STD HOLES

5 L4X4 DIAPHRAGM BRACING
3/4" = 1'-0"

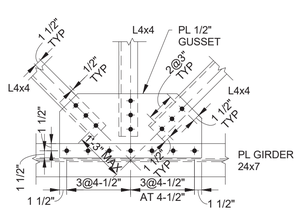

NOTES:
N1. ALL BOLTS ARE 7/8" ∅ A325-N IN STD HOLES

6 L4x4 DIAPHRAGM BRACING
3/4" = 1'-0"

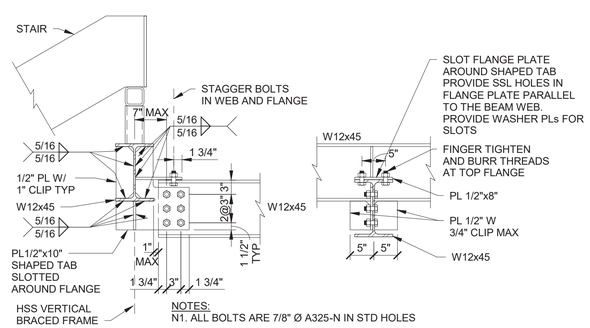

NOTES:
N1. ALL BOLTS ARE 7/8" Ø A325-N IN STD HOLES

7 W12X45 (Lo) TO W12X45
3/4" = 1'-0"

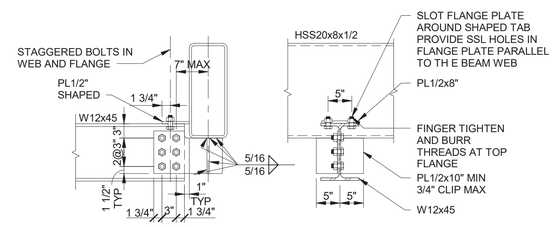

NOTES:
N1. ALL BOLTS ARE 7/8" Ø A325-N IN STD HOLES

8 W12X45 (Lo) TO HSS20X8
3/4" = 1'-0"

NOTES:
1. CONNECTIONS DESIGNED. NO FURTHER ANALYSIS REQUIRED.
2. GMAW OR FCAW-G (BTC-P10-GF) WELDING PROCESSES AT TOWER TRUSS CONNECTIONS, UON.

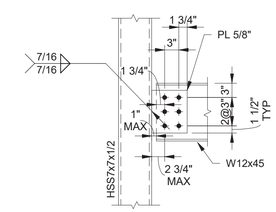

NOTES:
1. ALL BOLTS ARE 7/8" Ø A325-N IN STD HOLES

9 W12 TO SQUARE COLUMN CONNECTION
3/4" = 1'-0"

DESIGN BY:									
DRAWN BY:									
CHECKED BY:									
APPROVED BY:			01/27/2020	ISSUE FOR BID	CD	CC	TRM		
CDOT/APPROVED BY:		NO.	DATE	REVISIONS	DES.	DRW.	CHK.	DCCO	CDOT

SIMPSON GUMPERTZ & HEGER
Engineering of Structures and Building Enclosures
Simpson Gumpertz & Heger Inc.
135 South LaSalle Street, Suite 3800
Chicago, Illinois 60603
main: 312.754.7500 fax: 312.754.7501
www.sgh.com

PERKINS+WILL
The Wrigley Building
410 North Michigan Ave.
Suite 1600
Chicago, IL 60611
t 312.755.0770
f 312.755.0775
www.perkinswill.com

CDOT
CHICAGO DEPARTMENT OF TRANSPORTATION
DIVISION OF ENGINEERING

154 N DAMEN AVE - DAMEN GREEN LINE STATION

TOWER LEVEL 3 CONNECTION DETAILS

CDOT PROJECT D-7-135 | DATE: 01/27/2020

SPEC. NO.

DRAWING NO. **S42-23**

REVISION NO.

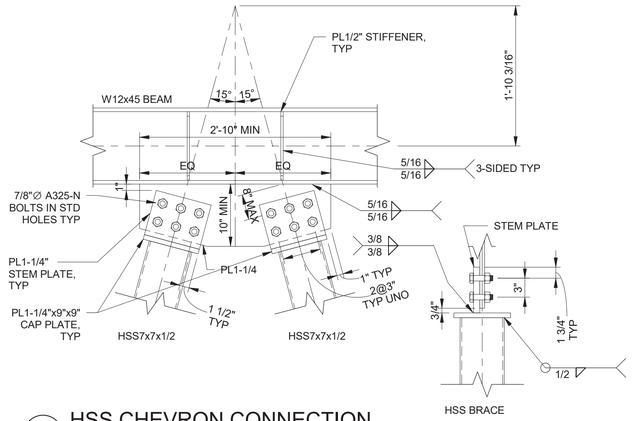

1 HSS CHEVRON CONNECTION
1" = 1'-0"

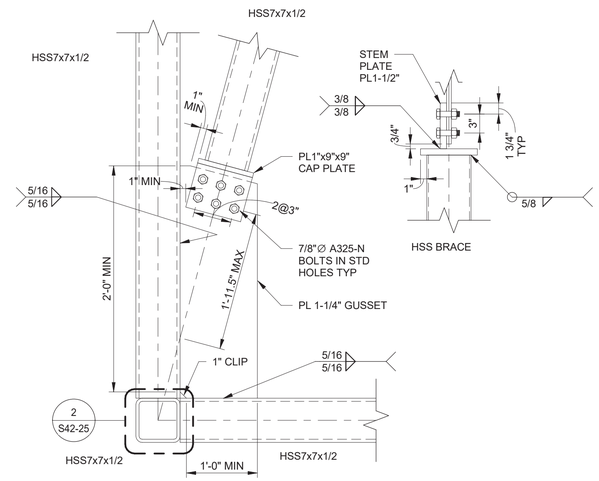

2 HSS CONNECTION
1" = 1'-0"

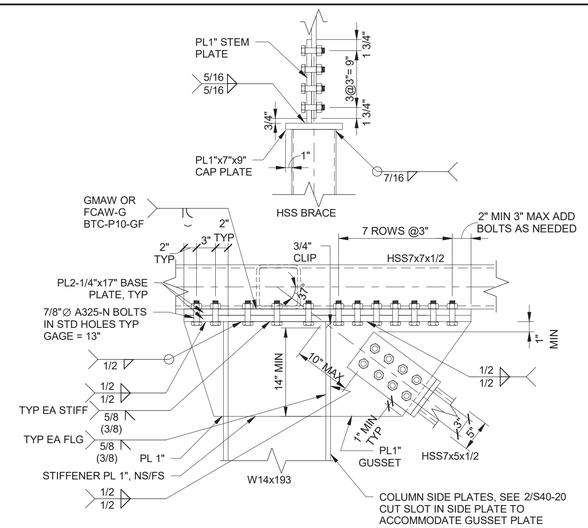

3 HSS CONNECTION TO W14 COLUMN
1" = 1'-0"

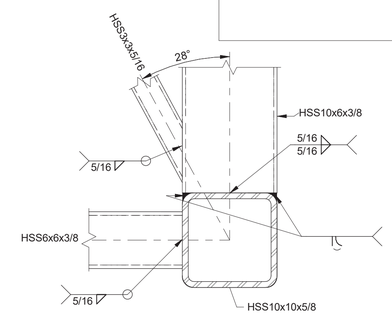

7 HIGH ROOF CONNECTION
1 1/2" = 1'-0"

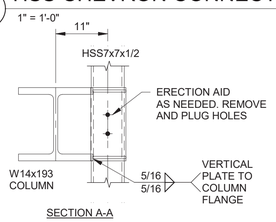

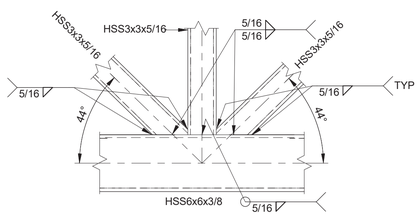

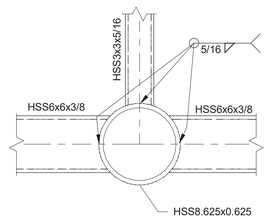

6 HIGH ROOF CONNECTION
1 1/2" = 1'-0"

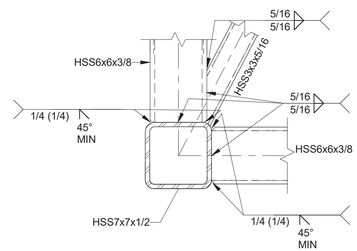

8 HIGH ROOF CONNECTION
1 1/2" = 1'-0"

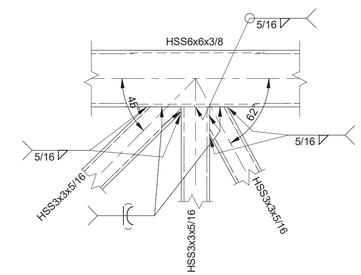

9 HIGH ROOF CONNECTION
1 1/2" = 1'-0"

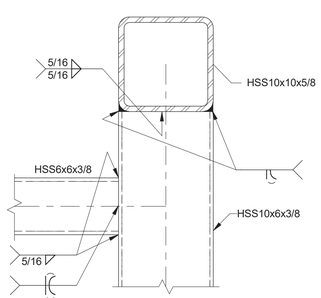

10 HIGH ROOF CONNECTION
1 1/2" = 1'-0"

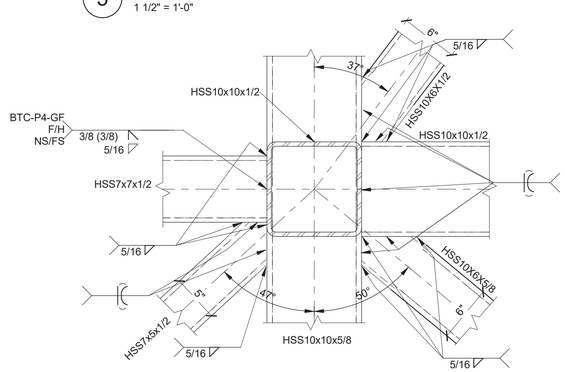

11 TOWER TRUSS CONNECTION
1 1/2" = 1'-0"

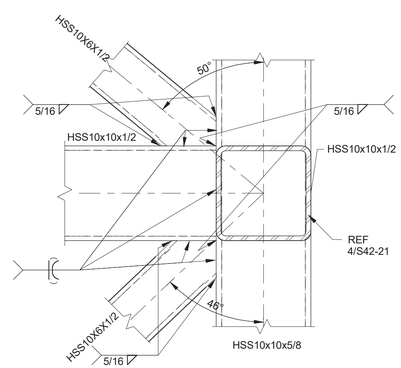

12 TOWER TRUSS CONNECTION
1 1/2" = 1'-0"

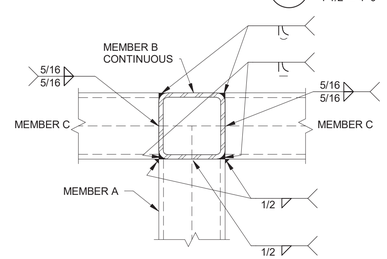

TYPICAL WELD AT TRUSS INTERSECTION

LEGEND

NOTES:
1. CONNECTIONS DESIGNED. NO FURTHER ANALYSIS REQUIRED.
2. GMAW OR FCAW-G (BTC-P10-GF) WELDING PROCESSES AT TOWER TRUSS CONNECTIONS, UON.

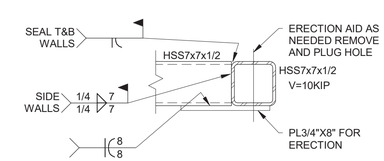

13 DETAIL
1" = 1'-0"

DESIGN BY:									
DRAWN BY:									
CHECKED BY:									
APPROVED BY:			01/27/2020	ISSUE FOR BID	CD	CC	TRM		
CDOT/APPROVED BY:		NO.	DATE	REVISIONS	DES.	DRW.	CHK.	DCCO	CDOT

SIMPSON GUMPERTZ & HEGER
Engineering of Structures and Building Enclosures
Simpson Gumpertz & Heger Inc.
135 South LaSalle Street, Suite 3800
Chicago, Illinois 60603
main: 312.754.7500 fax: 312.754.7501
www.sgh.com

PERKINS+WILL
The Wrigley Building
410 North Michigan Ave.
Suite 1600
Chicago, IL 60611
t 312.755.0770
f 312.755.0775
www.perkinswill.com

CDOT
CHICAGO DEPARTMENT OF TRANSPORTATION
DIVISION OF ENGINEERING

154 N DAMEN AVE - DAMEN GREEN LINE STATION

TOWER STEEL CONNECTION DETAILS

CDOT PROJECT D-7-135 | DATE: 01/27/2020

SPEC. NO.

DRAWING NO. S42-24

REVISION NO.

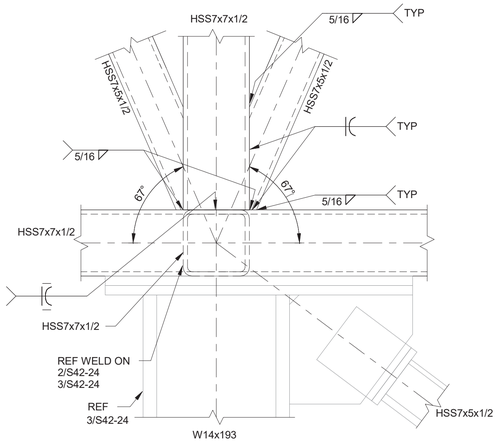

1 TOWER TRUSS CONNECTION
1 1/2" = 1'-0"

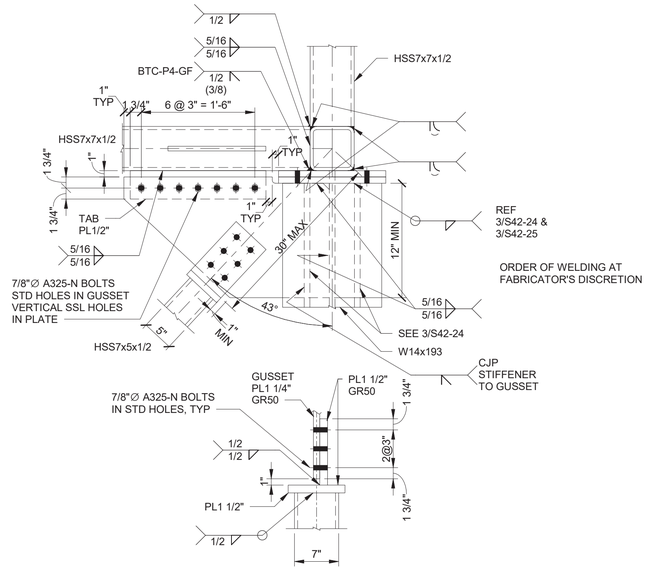

2 TOWER TRUSS CONNECTION
1" = 1'-0"

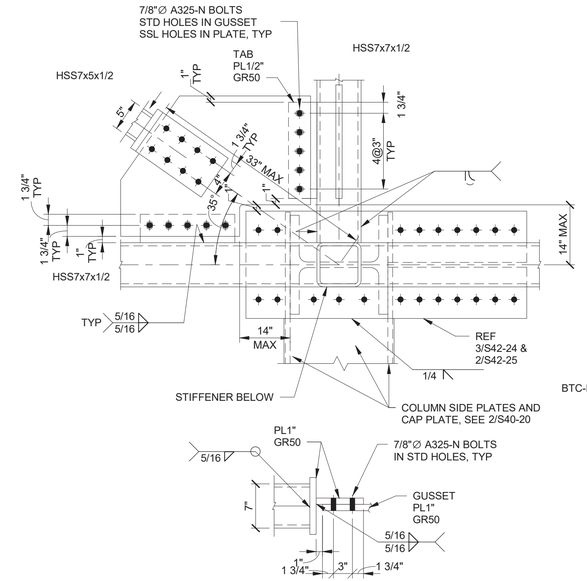

3 TOWER TRUSS CONNECTION
1" = 1'-0"

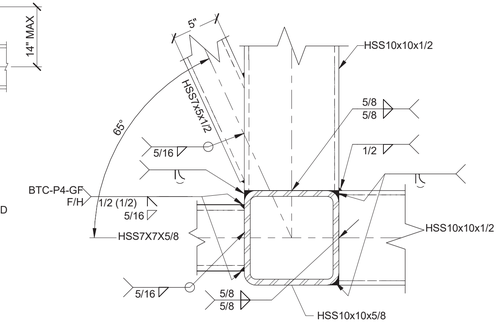

NOTE: ORDER OF WELDING AT FABRICATORS DISCRETION

4 TOWER TRUSS CONNECTION
1 1/2" = 1'-0"

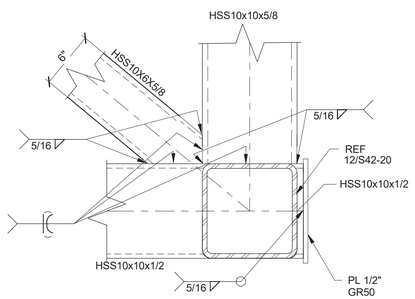

5 TOWER TRUSS CONNECTION
1 1/2" = 1'-0"

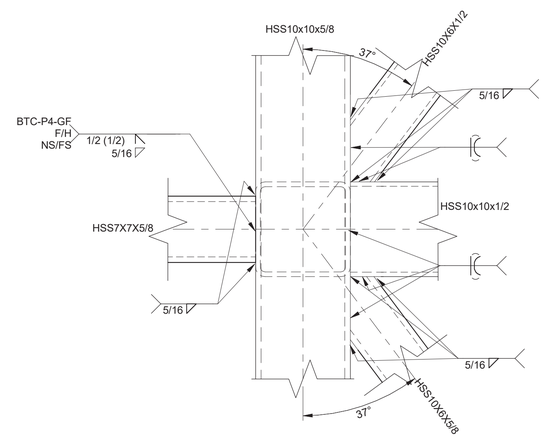

6 TOWER TRUSS CONNECTION
1 1/2" = 1'-0"

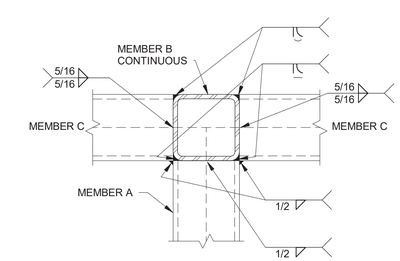

TYPICAL WELD AT TRUSS INTERSECTION

NOTES:
1. CONNECTIONS DESIGNED. NO FURTHER ANALYSIS REQUIRED.
2. GMAW OR FCAW-G (BTC-P10-GF) WELDING PROCESSES AT TOWER TRUSS CONNECTIONS, UON.

LEGEND
1 1/2" = 1'-0"

DESIGN BY:									
DRAWN BY:									
CHECKED BY:									
APPROVED BY:			01/27/2020	ISSUE FOR BID	CD	CC	TRM		
CDOT/APPROVED BY:		NO.	DATE	REVISIONS	DES.	DRW.	CHK.	DCCO	CDOT

SIMPSON GUMPERTZ & HEGER
Engineering of Structures and Building Enclosures
Simpson Gumpertz & Heger Inc.
135 South LaSalle Street, Suite 3800
Chicago, Illinois 60603
main: 312.754.7500 fax: 312.754.7501
www.sgh.com

PERKINS+WILL
The Wrigley Building
410 North Michigan Ave.
Suite 1600
Chicago, IL 60611
t 312.755.0770
f 312.755.0775
www.perkinswill.com

CDOT
CHICAGO DEPARTMENT OF TRANSPORTATION
DIVISION OF ENGINEERING

154 N DAMEN AVE - DAMEN GREEN LINE STATION

TOWER STEEL CONNECTION DETAILS

CDOT PROJECT D-7-135 | DATE: 01/27/2020

SPEC. NO.

DRAWING NO. S42-25

REVISION NO.

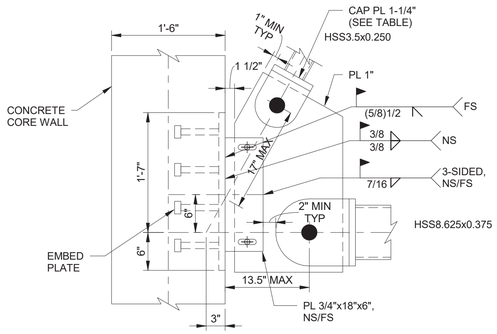

NOTES:
N1. HSS TUBES: ASTM A1085 (Fy = 50 KSI)
N2. SEE 3/S42-26 FOR HSS TO PIN CONNECTION INFORMATION NOT SHOWN

1 HSS TO EMBED CONNECTION
1" = 1'-0"

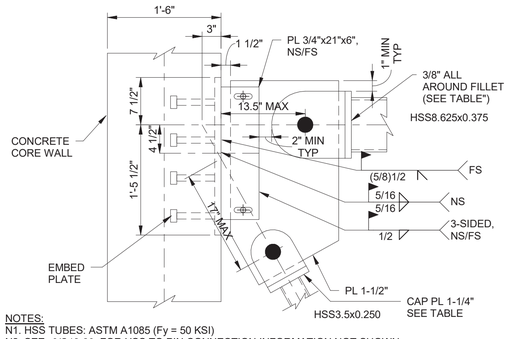

NOTES:
N1. HSS TUBES: ASTM A1085 (Fy = 50 KSI)
N2. SEE 3/S42-26 FOR HSS TO PIN CONNECTION INFORMATION NOT SHOWN

2 HSS TO EMBED CONNECTION
1" = 1'-0"

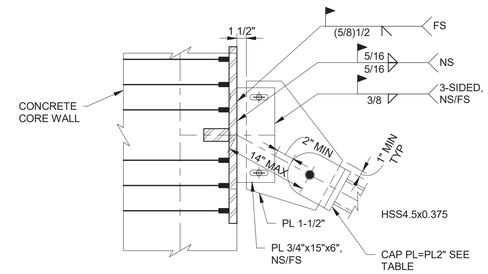

NOTES:
N1. HSS TUBES: ASTM A1085 (Fy = 50 KSI)
N2. ALL HANGER CONNECTION STEEL TO BE FCM

3 HSS TO EMBED CONNECTION
1" = 1'-0"

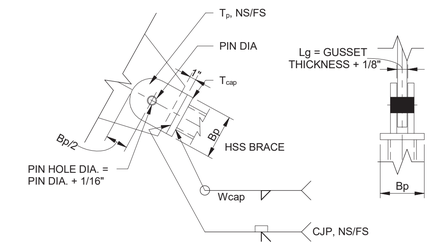

HSS BRACE SIZE	Ø PIN	T_{cap}	W_{cap}	T_p	B_p	L_g, max grip
HSS3.5x0.250	2-1/2"	1-1/4"	3/8"	3/4"	6"	1-3/4"
HSS8.625x0.375	2-1/2"	1"	3/8"	1"	11"	1-3/4"
HSS4.5x0.375	2-1/2"	2"	9/16"	1"	7"	1-3/4"

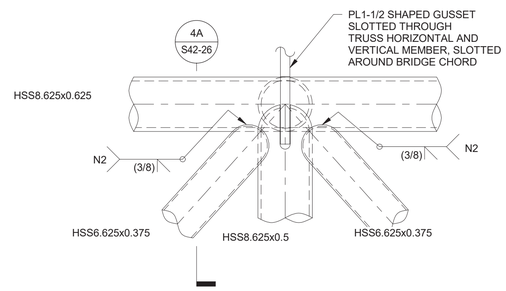

NOTES:
N1. HSS TUBES: ASTM A1085 GR. A (F_Y = 50 KSI)
N2. MINIMUM REQUIRED EFFECTIVE THROAT, WELD TO FOLLOW AWS D1.1/D1.1M:2015 PREQUALIFIED JOINT DETAILS FOR PJP

4 HSS KICKER CONNX. TO BRIDGE TOP CHORD
1" = 1'-0"

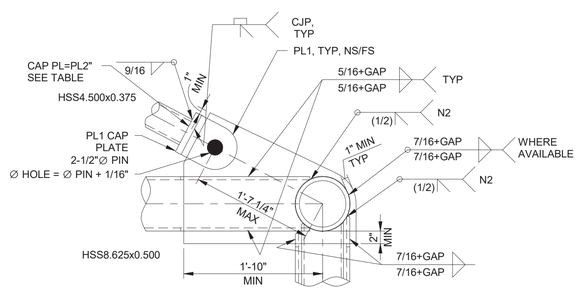

4A HSS KICKER CONNX. TO BRIDGE TOP CHORD
1" = 1'-0"

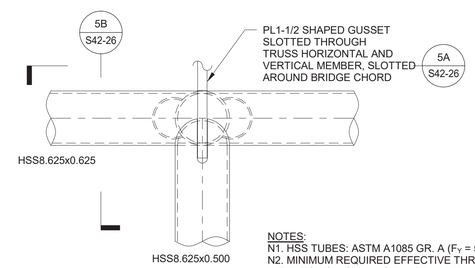

NOTES:
N1. HSS TUBES: ASTM A1085 GR. A (F_Y = 50 KSI)
N2. MINIMUM REQUIRED EFFECTIVE THROAT, WELD TO FOLLOW AWS D1.1/D1.1M:2015 PREQUALIFIED JOINT DETAILS FOR PJP

5 HSS KICKER CONNX. TO BRIDGE TOP CHORD
1" = 1'-0"

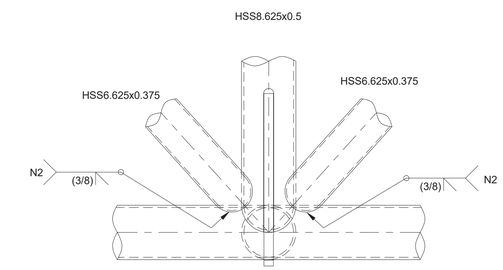

5A HSS CKICKER ONNX. TO BRIDGE TOP CHORD
1" = 1'-0"

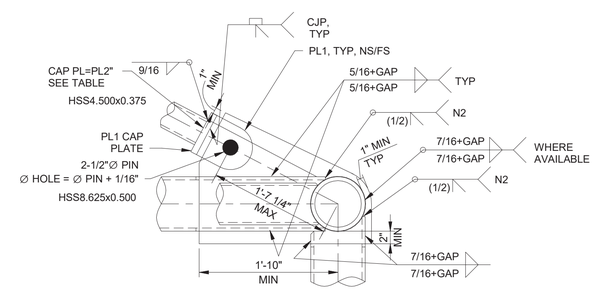

5B HSS KICKER CONNX. TO BRIDGE TOP CHORD
1" = 1'-0"

DESIGN BY:									
DRAWN BY:									
CHECKED BY:									
APPROVED BY:			01/27/2020	ISSUE FOR BID	CD	CC	TRM		
CDOT/APPROVED BY:		NO.	DATE	REVISIONS	DES.	DRW.	CHK.	DCCO	CDOT

SIMPSON GUMPERTZ & HEGER
Engineering of Structures and Building Enclosures
Simpson Gumpertz & Heger Inc.
135 South LaSalle Street, Suite 3800
Chicago, Illinois 60603
main: 312.754.7500 fax: 312.754.7501
www.sgh.com

PERKINS+WILL
The Wrigley Building
410 North Michigan Ave.
Suite 1600
Chicago, IL 60611
t 312.755.0770
f 312.755.0775
www.perkinswill.com

CDOT
CHICAGO DEPARTMENT OF TRANSPORTATION
DIVISION OF ENGINEERING

154 N DAMEN AVE - DAMEN GREEN LINE STATION

BRIDGE STEEL CONNECTION DETAILS

CDOT PROJECT D-7-135 | DATE: 01/27/2020

SPEC. NO.

DRAWING NO. **S42-26**

REVISION NO.

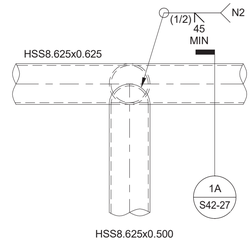

1 BRIDGE DETAIL
3/4" = 1'-0"

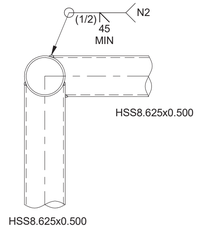

1A BRIDGE SECTION
3/4" = 1'-0"

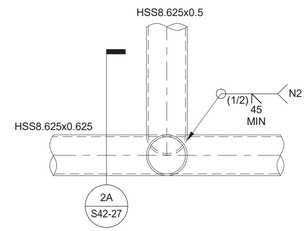

2 BRIDGE DETAIL
3/4" = 1'-0"

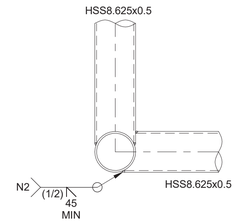

2A BRIDGE SECTION
3/4" = 1'-0"

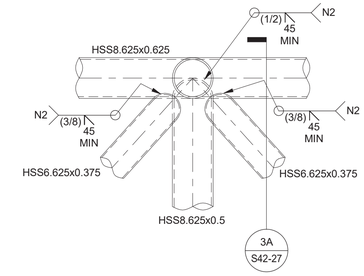

3 BRIDGE DETAIL
3/4" = 1'-0"

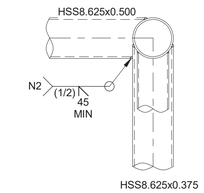

3A BRIDGE SECTION
3/4" = 1'-0"

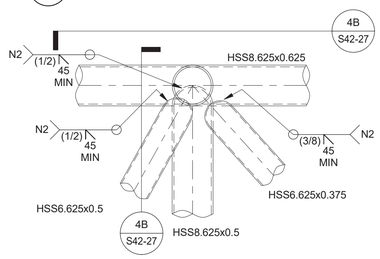

4 BRIDGE DETAIL
3/4" = 1'-0"

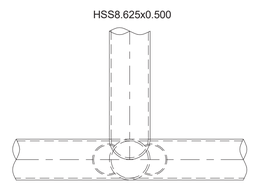

4A BRIDGE SECTION
3/4" = 1'-0"

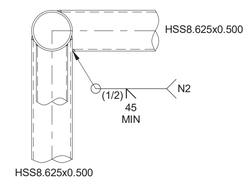

4B BRIDGE SECTION
3/4" = 1'-0"

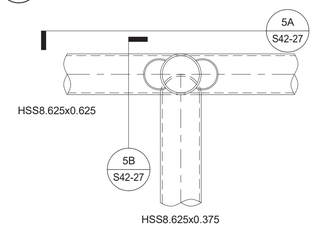

5 BRIDGE DETAIL
3/4" = 1'-0"

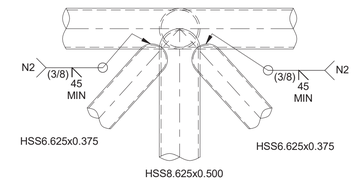

5A BRIDGE SECTION
3/4" = 1'-0"

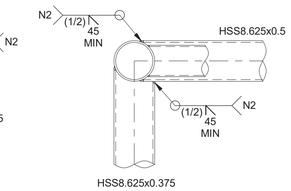

5B BRIDGE SECTION
3/4" = 1'-0"

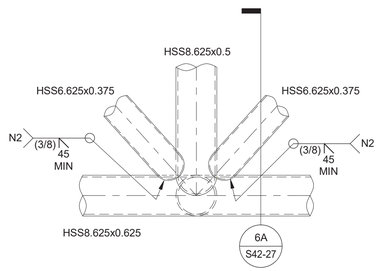

6 BRIDGE DETAIL
3/4" = 1'-0"

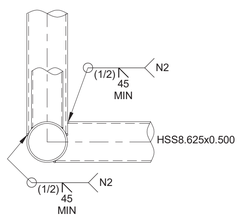

6A BRIDGE SECTION
3/4" = 1'-0"

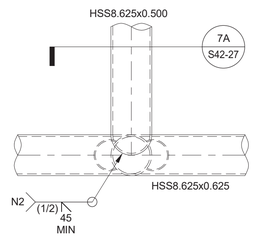

7 BRIDGE DETAIL
3/4" = 1'-0"

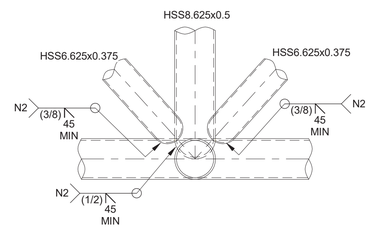

7A BRIDGE SECTION
3/4" = 1'-0"

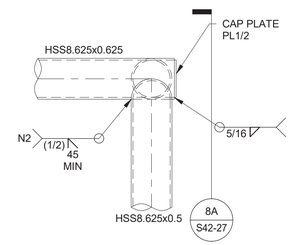

8 BRIDGE DETAIL
3/4" = 1'-0"

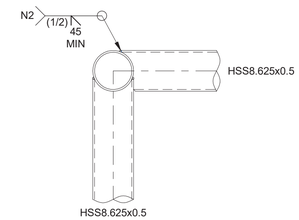

8A BRIDGE SECTION
3/4" = 1'-0"

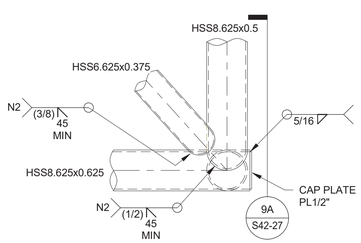

9 BRIDGE DETAIL
3/4" = 1'-0"

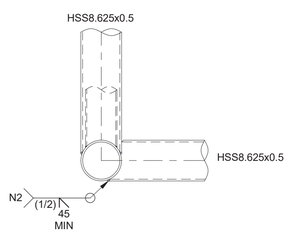

9A BRIDGE SECTION
3/4" = 1'-0"

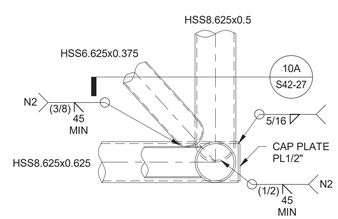

10 BRIDGE DETAIL
3/4" = 1'-0"

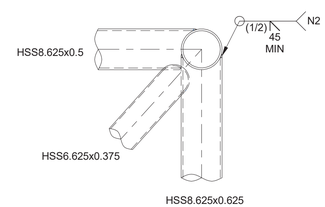

10A BRIDGE SECTION
3/4" = 1'-0"

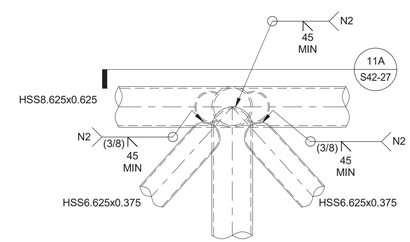

11 BRIDGE DETAIL
3/4" = 1'-0"

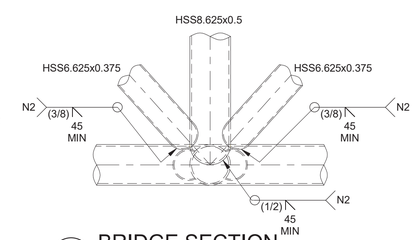

11A BRIDGE SECTION
3/4" = 1'-0"

Notes:
N1. HSS TUBES: ASTM A1085 GR A (Fy=50 KSI)
N2. MINIMUM REQUIRED EFFECTIVE THROAT, WELD TO FOLLOW AWS D1.1/D1.1M:2015 PREQUALIFIED JOINT DETAILS FOR PJP

DESIGN BY:									
DRAWN BY:									
CHECKED BY:									
APPROVED BY:			01/27/2020	ISSUE FOR BID	CD	CC	TRM		
CDOT/APPROVED BY:		NO.	DATE	REVISIONS	DES.	DRW.	CHK.	DCCO	CDOT

SIMPSON GUMPERTZ & HEGER
Engineering of Structures and Building Enclosures
Simpson Gumpertz & Heger Inc.
135 South LaSalle Street, Suite 3800
Chicago, Illinois 60603
main: 312.754.7500 fax: 312.754.7501
www.sgh.com

PERKINS+WILL
The Wrigley Building
410 North Michigan Ave.
Suite 1600
Chicago, IL 60611
t 312.755.0770
f 312.755.0775
www.perkinswill.com

CDOT
CHICAGO DEPARTMENT OF TRANSPORTATION
DIVISION OF ENGINEERING

154 N DAMEN AVE - DAMEN GREEN LINE STATION

BRIDGE STEEL CONNECTION DETAILS

CDOT PROJECT D-7-135 | DATE: 01/27/2020

SPEC. NO.

DRAWING NO. **S42-27**

REVISION NO.

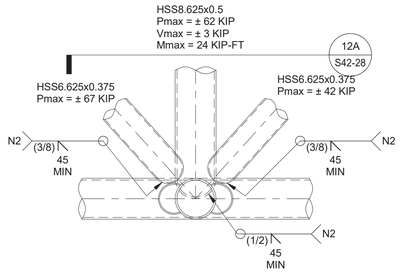

12 BRIDGE DETAIL
3/4" = 1'-0"

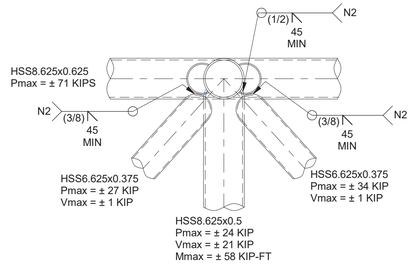

12A BRIDGE SECTION
3/4" = 1'-0"

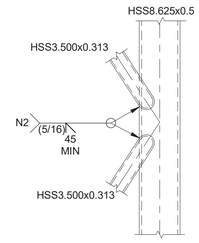

13 BRIDGE DETAIL
3/4" = 1'-0"

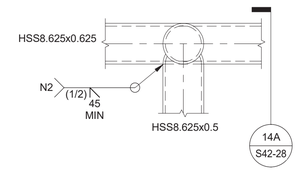

14 BRIDGE DETAIL
3/4" = 1'-0"

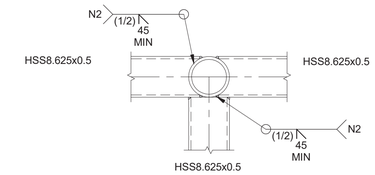

14A BRIDGE SECTION
3/4" = 1'-0"

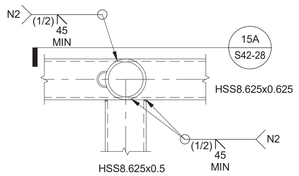

15 BRIDGE DETAIL
3/4" = 1'-0"

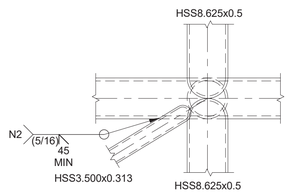

15A BRIDGE SECTION
3/4" = 1'-0"

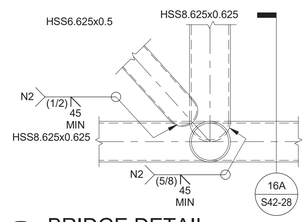

16 BRIDGE DETAIL
3/4" = 1'-0"

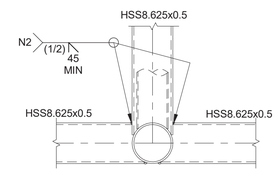

16A BRIDGE SECTION
3/4" = 1'-0"

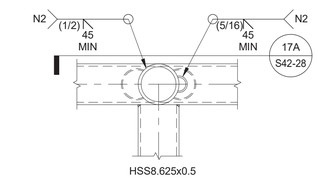

17 BRIDGE DETAIL
3/4" = 1'-0"

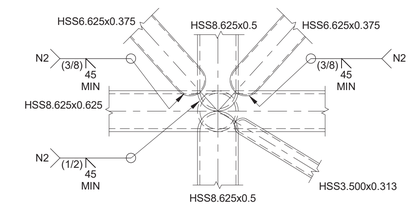

17A BRIDGE SECTION
3/4" = 1'-0"

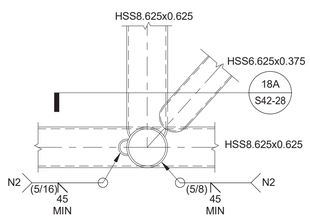

18 BRIDGE DETAIL
3/4" = 1'-0"

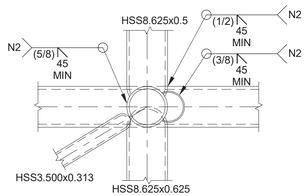

18A BRIDGE SECTION
3/4" = 1'-0"

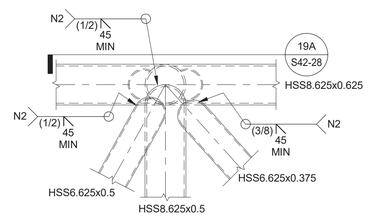

19 BRIDGE DETAIL
3/4" = 1'-0"

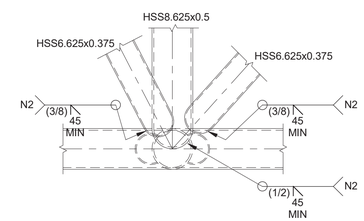

19A BRIDGE SECTION
3/4" = 1'-0"

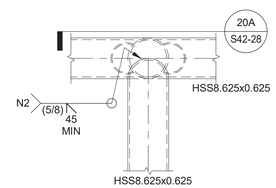

20 BRIDGE DETAIL
3/4" = 1'-0"

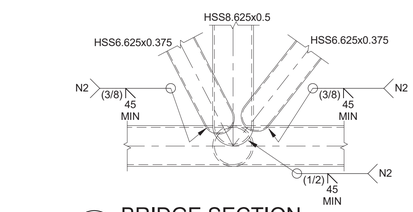

20A BRIDGE SECTION
3/4" = 1'-0"

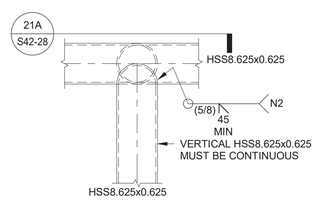

21 BRIDGE DETAIL
3/4" = 1'-0"

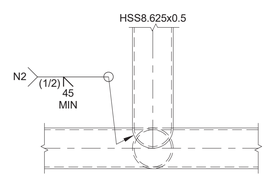

21A BRIDGE SECTION
3/4" = 1'-0"

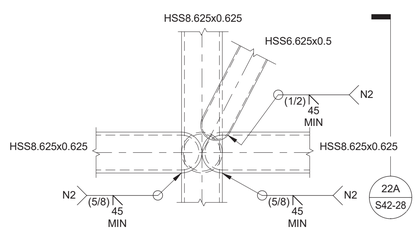

22 BRIDGE DETAIL
3/4" = 1'-0"

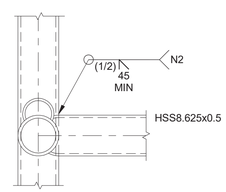

22A BRIDGE SECTION
3/4" = 1'-0"

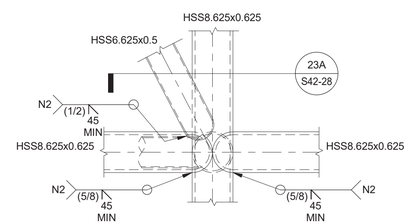

23 BRIDGE DETAIL
3/4" = 1'-0"

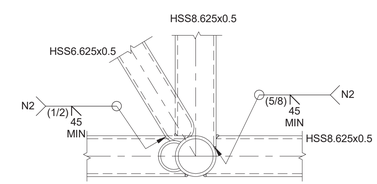

23A BRIDGE SECTION
3/4" = 1'-0"

Notes:
N1. HSS TUBES: ASTM A1085 GR A (Fy=50 KSI)
N2. MINIMUM REQUIRED EFFECTIVE THROAT, WELD TO FOLLOW AWS D1.1/D1.1M:2015 PREQUALIFIED JOINT DETAILS FOR PJP

DESIGN BY:									
DRAWN BY:									
CHECKED BY:									
APPROVED BY:			01/27/2020	ISSUE FOR BID	CD	CC	TRM		
CDOT/APPROVED BY:		NO.	DATE	REVISIONS	DES.	DRW.	CHK.	DCCO	CDOT

SIMPSON GUMPERTZ & HEGER
Engineering of Structures and Building Enclosures
Simpson Gumpertz & Heger Inc.
135 South LaSalle Street, Suite 3800
Chicago, Illinois 60603
main: 312.754.7500 fax: 312.754.7501
www.sgh.com

PERKINS+WILL
The Wrigley Building
410 North Michigan Ave.
Suite 1600
Chicago, IL 60611
t 312.755.0770
f 312.755.0775
www.perkinswill.com

CDOT
CHICAGO DEPARTMENT OF TRANSPORTATION
DIVISION OF ENGINEERING

154 N DAMEN AVE - DAMEN GREEN LINE STATION

BRIDGE STEEL CONNECTION DETAILS

CDOT PROJECT D-7-135 | DATE: 01/27/2020

SPEC. NO.

DRAWING NO. **S42-28**

REVISION NO.

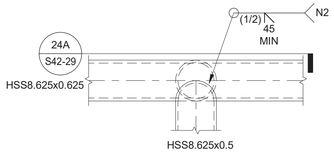

24 BRIDGE DETAIL

3/4" = 1'-0"

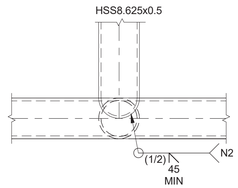

24A BRIDGE SECTION

3/4" = 1'-0"

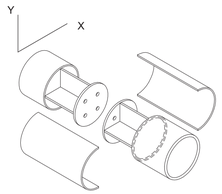

ALTERNATIVE SPLICE IF SUFFICIENT STRENGTH
AT PREFERRED SPLICE LOCATIONS
REFER TO CAST CONNEX DIABLO BOLTED SPLICE
OR EQUIVALENT

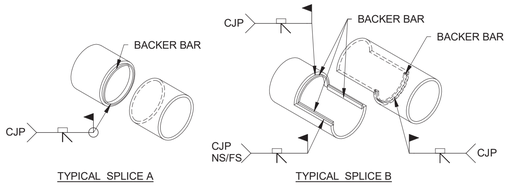

TYPICAL SPLICE A

TYPICAL SPLICE B

6 TYPICAL HSS SPLICE

3/4" = 1'-0"

SPLICE LOADS
(LRFD Factored)

HSS8.625x0.625
LC1
Mux = 90 k-ft
Muy = 30 k-ft
Vux = 15 kip
Vuy = 50 kip
Pu = ± 150 kip
LC2
Mux = 25 k-ft
Muy = 75 k-ft
Vux = 15 kip
Vuy = 50 kip
Pu = ± 150 kip

HSS8.625X0.500
LC1
Mux = 80 k-ft
Muy = 10 k-ft
Vux = 80 kip
Vuy = 80 kip
Pu = ± 150 kip
LC2
Mux = 20 k-ft
Muy = 45 k-ft
Vux = 80 kip
Vuy = 80 kip
Pu = ± 150 kip

HSS6.626X0.500
Mux = 5 k-ft
Muy = 5 k-ft
Vux = 5 kip
Vuy = 5 kip
Pu = ±150 kip

Notes:
N1. HSS TUBES: ASTM A1085 GR A (Fy=50 KSI)
N2. MINIMUM REQUIRED EFFECTIVE THROAT, WELD TO FOLLOW AWS D1.1/D1.1M:2015 PREQUALIFIED JOINT DETAILS FOR PJP

DESIGN BY:									
DRAWN BY:									
CHECKED BY:									
APPROVED BY:			01/27/2020	ISSUE FOR BID	CD	CC	TRM		
CDOT/APPROVED BY:		NO.	DATE	REVISIONS	DES.	DRW.	CHK.	DCCO	CDOT

SIMPSON GUMPERTZ & HEGER
Engineering of Structures and Building Enclosures
Simpson Gumpertz & Heger Inc.
135 South LaSalle Street, Suite 3800
Chicago, Illinois 60603
main: 312.754.7500 fax: 312.754.7501
www.sgh.com

PERKINS+WILL
The Wrigley Building
410 North Michigan Ave.
Suite 1600
Chicago, IL 60611
t 312.755.0770
f 312.755.0775
www.perkinswill.com

CDOT
CHICAGO DEPARTMENT OF TRANSPORTATION
DIVISION OF ENGINEERING

154 N DAMEN AVE - DAMEN GREEN LINE STATION

BRIDGE STEEL CONNECTION DETAILS

CDOT PROJECT D-7-135 | DATE: 01/27/2020

SPEC. NO.

DRAWING NO. **S42-29**

REVISION NO.

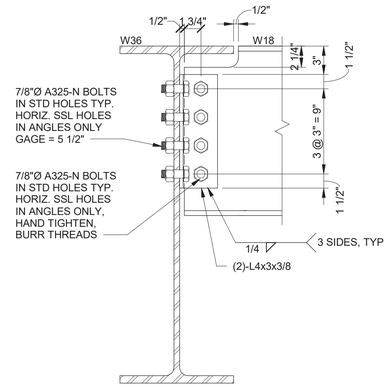

1 W18-TO-W36 CONNECTION
1 1/2" = 1'-0"

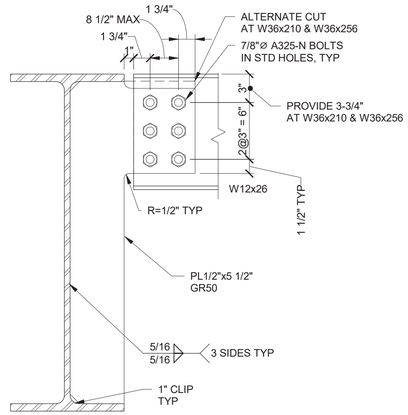

2 W12 TO W36 CONNECTION
1 1/2" = 1'-0"

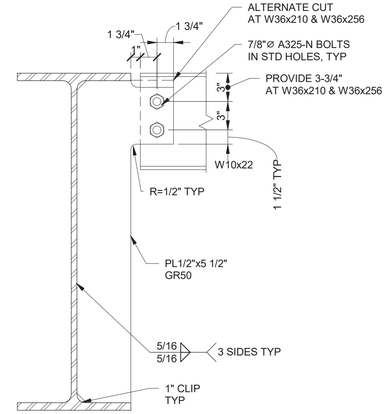

3 W10 TO W36 CONNECTION
1 1/2" = 1'-0"

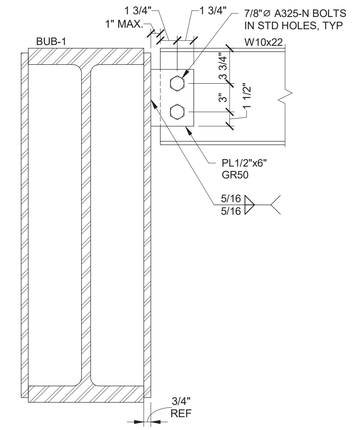

4 W10-TO-BUB-1 CONNECTION
1 1/2" = 1'-0"

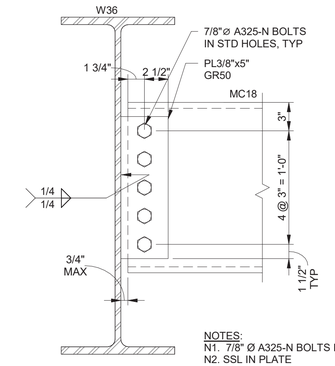

NOTES:
N1. 7/8" Ø A325-N BOLTS IN STD HOLES, UNO
N2. SSL IN PLATE

5 MC18 SIMPLE SHEAR
1 1/2" = 1'-0"

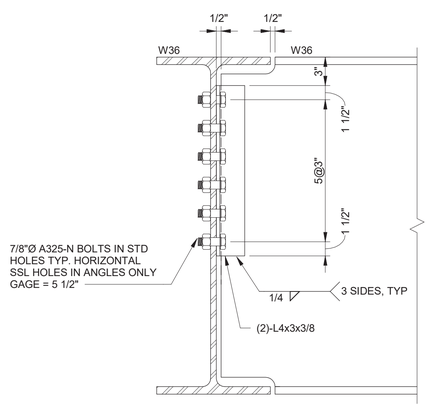

6 W36-TO-36 CONNECTION
1 1/2" = 1'-0"

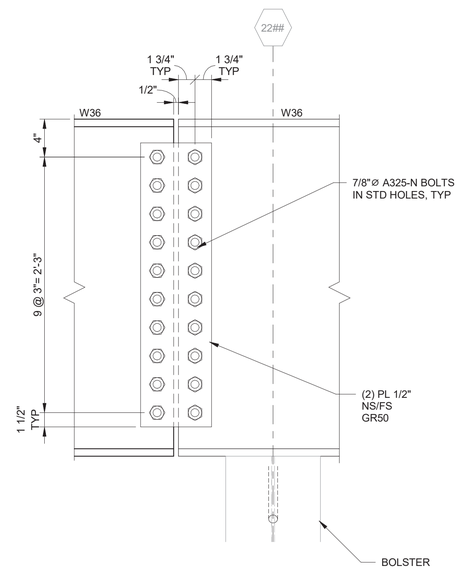

7 W36-TO-W36 WEB SPLICE
1 1/2" = 1'-0"

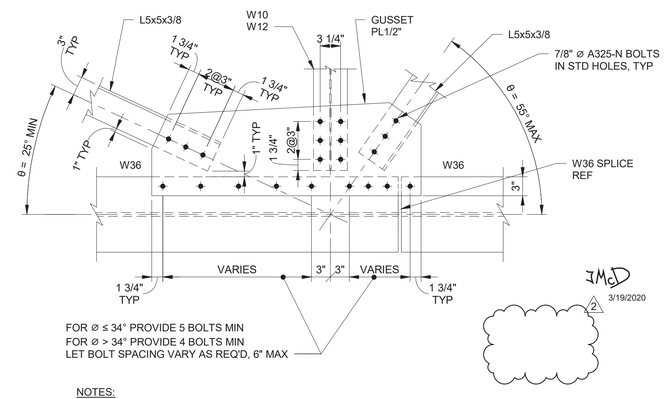

NOTES:
1. W10/W12 WEB CONNECTION NOT SHOWN

8 BRACING CONNECTION AT PLATFORM
1" = 1'-0"

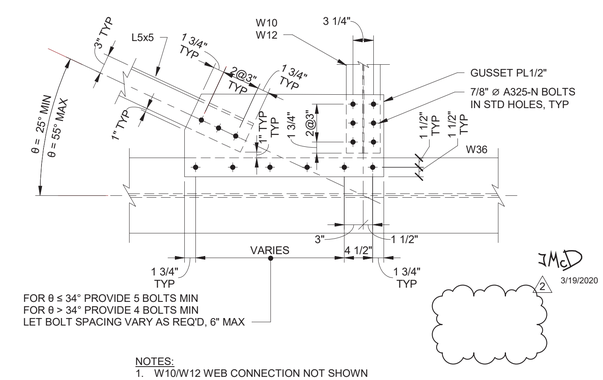

NOTES:
1. W10/W12 WEB CONNECTION NOT SHOWN

9 BRACING CONNECTION AT PLATFORM
1" = 1'-0"

DESIGN BY:									
DRAWN BY:									
CHECKED BY:									
APPROVED BY:			03/18/2020	BUILDING PERMIT CORRECTIONS 2	CD	CC	TRM		
CDOT/APPROVED BY:		NO.	DATE	REVISIONS	DES.	DRW.	CHK.	DCCO	CDOT

STATE OF ILLINOIS TERRY R. McDONNELL 081-006 LICENSED STRUCTURAL ENGINEER
Exp. 11/30/2020

SIMPSON GUMPERTZ & HEGER
Engineering of Structures and Building Enclosures
Simpson Gumpertz & Heger Inc.
135 South LaSalle Street, Suite 3800
Chicago, Illinois 60603
main: 312.754.7500 fax: 312.754.7501
www.sgh.com

PERKINS+WILL
The Wrigley Building
410 North Michigan Ave.
Suite 1600
Chicago, IL 60611
t 312.755.0770
f 312.755.0775
www.perkinswill.com

CDOT
CHICAGO DEPARTMENT OF TRANSPORTATION
DIVISION OF ENGINEERING

154 N DAMEN AVE - DAMEN GREEN LINE STATION

PLATFORM AND EXISTING STEEL CONNECTION DETAILS

CDOT PROJECT D-7-135 | DATE: 01/27/2020

SPEC. NO.

DRAWING NO. **S42-30**

REVISION NO.

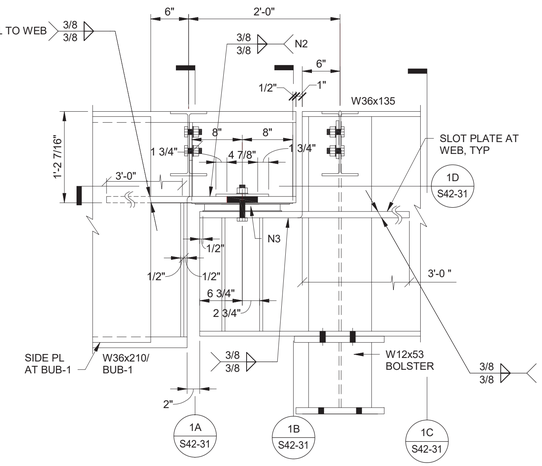

NOTES:
N1. 7/8"Ø A325-X BOLTS, FINGER TIGHTEN, BURR THREADS. STD HOLES UNO
N2. 15/16"X4-7/8" SLOT IN UPPER W36 FLANGE PLATE. SEE DETAIL 1/S41-36 FOR SLOTS IN UPPER EXPANSION BEARING ASSEMBLY
N3. SEE DETAIL 1/S41-36 FOR EXPANSION BEARING ASSEMBLY
N4. USE 5-1/2" GAGE OR AS NEEDED TO MATCH BEARING ASSEMBLY

1 W36 BEAM CONNECTION AT EXPANSION JOINT
1" = 1'-0"

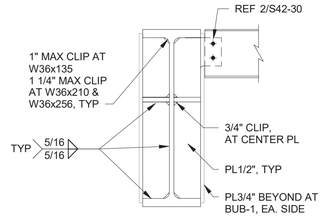

1A SECTION
3/4" = 1'-0"

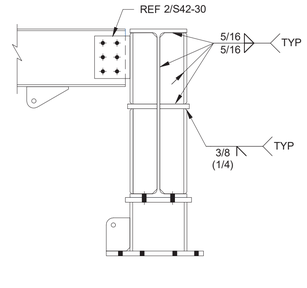

1C SECTION
3/4" = 1'-0"

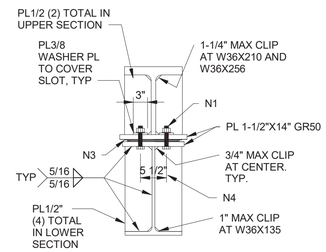

1B SECTION
3/4" = 1'-0"

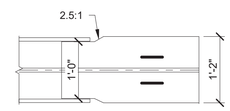

1D TAPERED FLANGE
3/4" = 1'-0"

DESIGN BY:									
DRAWN BY:									
CHECKED BY:									
APPROVED BY:			01/27/2020	ISSUE FOR BID	CD	CC	TRM		
CDOT/APPROVED BY:		NO.	DATE	REVISIONS	DES.	DRW.	CHK.	DCCO	CDOT

SIMPSON GUMPERTZ & HEGER
Engineering of Structures and Building Enclosures
Simpson Gumpertz & Heger Inc.
135 South LaSalle Street, Suite 3800
Chicago, Illinois 60603
main: 312.754.7500 fax: 312.754.7501
www.sgh.com

PERKINS+WILL
The Wrigley Building
410 North Michigan Ave.
Suite 1600
Chicago, IL 60611
t 312.755.0770
f 312.755.0775
www.perkinswill.com

CDOT
CHICAGO DEPARTMENT OF TRANSPORTATION
DIVISION OF ENGINEERING

154 N DAMEN AVE - DAMEN GREEN LINE STATION

PLATFORM AND EXISTING STEEL CONNECTION DETAILS

CDOT PROJECT D-7-135 | DATE: 01/27/2020

SPEC. NO.

DRAWING NO. **S42-31**

REVISION NO.

NOTES:
1. REFER TO GENERAL NOTES FOR ADDITIONAL INFORMATION ON ARCHITECTURALLY EXPOSED STRUCTURAL STEEL (AESS)
2. REFER TO AISC 303-16 CODE OF STANDARD PRACTICE FOR AESS SPECIFICATION INFORMATION.
   A. ALL WELDED CONNECTIONS ARE INCLUDED WITHIN MEMBER AESS CATEGORY INDICATED ABOVE.
   B. TWO CONNECTION EXISTS BETWEEN TWO DIFFERENT CATEGORIES, THE CONTRACTOR SHALL FOLLOW THE LARGEST NUMBER CATEGORY FOR THE CONNECTIONS AESS REQUIREMENTS.
3. CONNECTIONS INDICATED ON DRAWINGS REQUIRE A MOCKUP ACCORDING TO THE GENERAL NOTES AND PROJECT SPECIFICATIONS.

STEEL FINISH COLOR LEGEND

- DENOTES AESS - CATEGORY 2, COATED PER ARCH
- DENOTES AESS - CATEGORY 3, COATED PER ARCH
- DENOTES AESS - CATEGORY 4, COATED PER ARCH
- DENOTES HOT-DIP GALVANIZED STEEL
- DENOTES SHOP PRIMED STEEL
- DENOTES 316L STAINLESS STEEL
- DENOTES HOT-DIP GALVANIZED STEEL AND PAINTED PER ARCH
- DENOTES TRACK SUPPORTING STEEL PAINTED PER ARCH
- DENOTES GALVANIZED METAL DECK

PRINT THIS SHEET IN COLOR

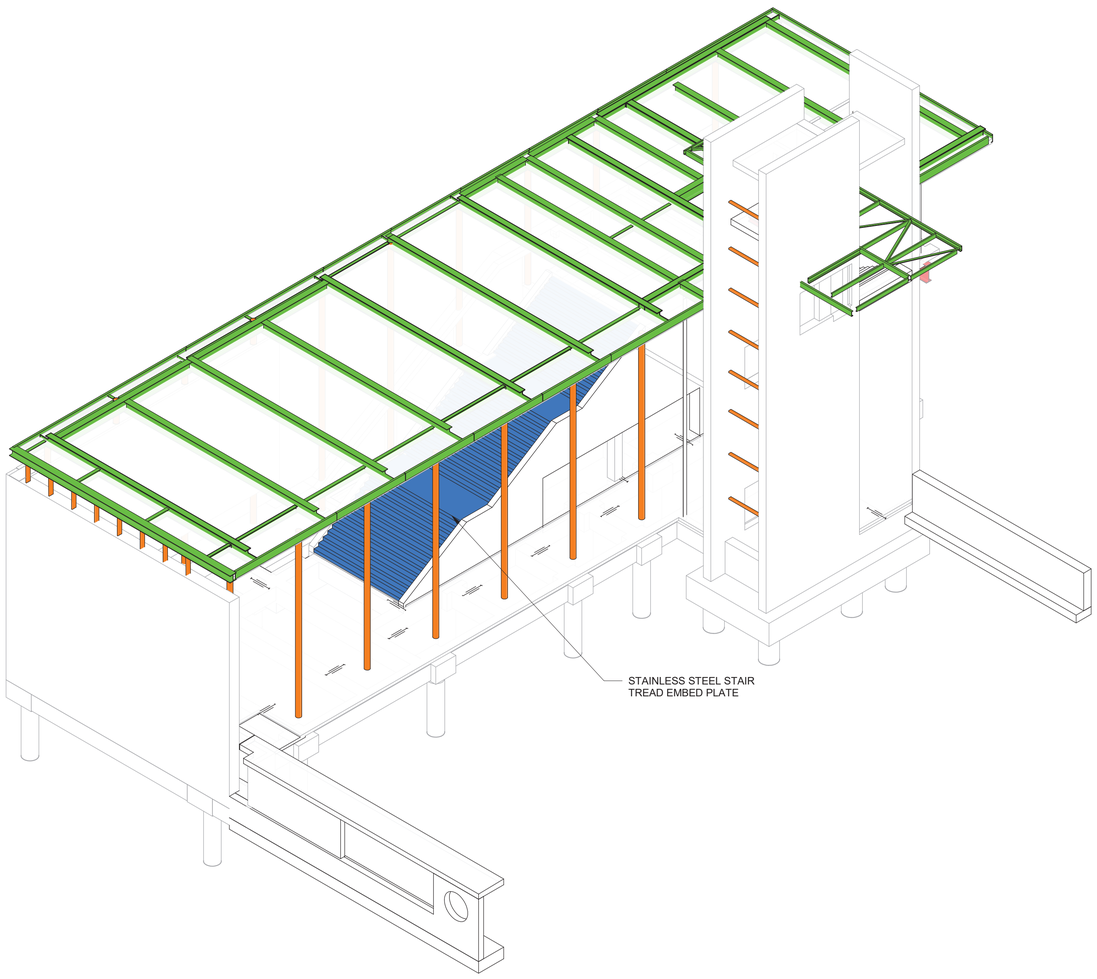

1 3D - STATION HOUSE SOUTH EAST PERSPECTIVE

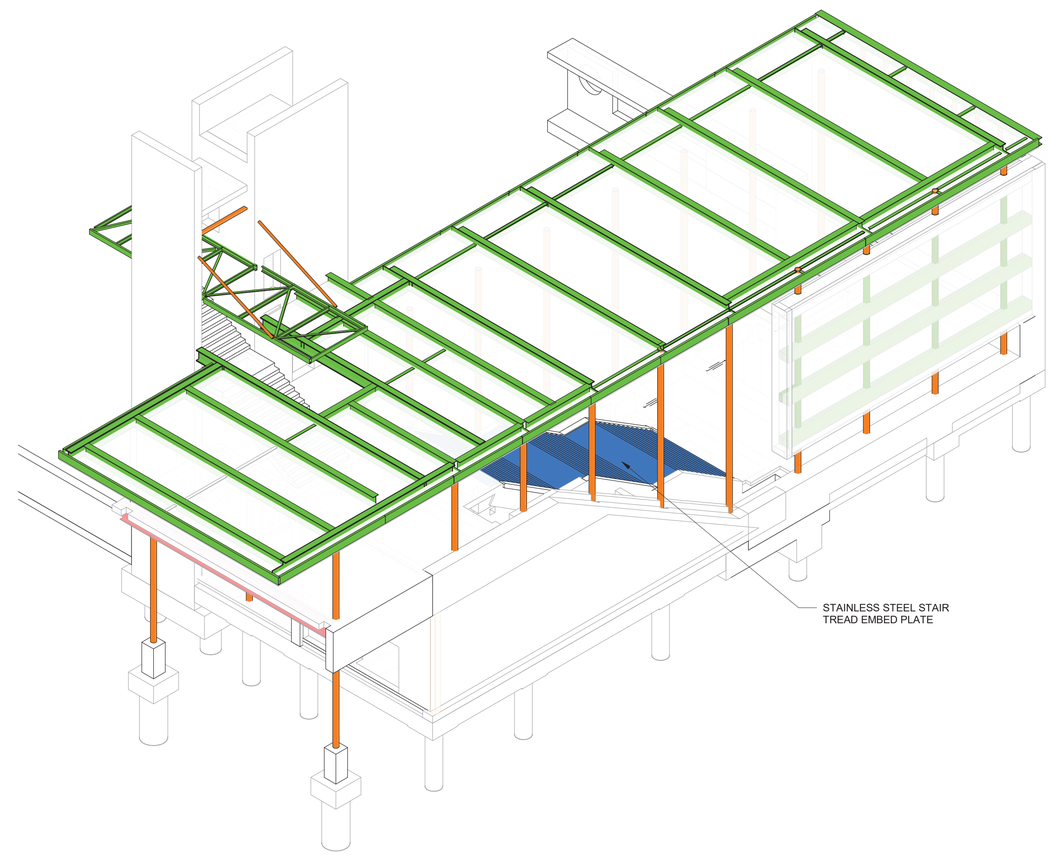

2 3D - STATION HOUSE NORTH WEST PERSPECTIVE

SHEET BEST VIEWED IN COLOR

DESIGN BY:								
DRAWN BY:								
CHECKED BY:								
APPROVED BY:			01/27/2020	ISSUE FOR BID	EJT	HMM	TRM	
CDOT/APPROVED BY:		NO.	DATE	REVISIONS	DES.	DRW.	CHK.	DCCO	CDOT

SIMPSON GUMPERTZ & HEGER
Engineering of Structures and Building Enclosures
Simpson Gumpertz & Heger Inc.
135 South LaSalle Street, Suite 3800
Chicago, Illinois 60603
main: 312.754.7500 fax: 312.754.7501
www.sgh.com

PERKINS+WILL
The Wrigley Building
410 North Michigan Ave.
Suite 1600
Chicago, IL 60611
t 312.755.0770
f 312.755.0775
www.perkinswill.com

CDOT
CHICAGO DEPARTMENT OF TRANSPORTATION
DIVISION OF ENGINEERING

154 N DAMEN AVE - DAMEN GREEN LINE STATION

AESS DRAWING

CDOT PROJECT D-7-135 | DATE: 01/27/2020

SPEC. NO.

DRAWING NO. S43-00

REVISION NO.

NOTES:
1. REFER TO GENERAL NOTES FOR ADDITIONAL INFORMATION ON ARCHITECTURALLY EXPOSED STRUCTURAL STEEL (AESS)
2. REFER TO AISC 303-16 CODE OF STANDARD PRACTICE FOR AESS SPECIFICATION INFORMATION.
   A. ALL WELDED CONNECTIONS ARE INCLUDED WITHIN MEMBER AESS CATEGORY INDICATED ABOVE.
   B. TWO CONNECTION EXISTS BETWEEN TWO DIFFERENT CATEGORIES, THE CONTRACTOR SHALL FOLLOW THE LARGEST NUMBER CATEGORY FOR THE CONNECTIONS AESS REQUIREMENTS.
3. CONNECTIONS INDICATED ON DRAWINGS REQUIRE A MOCKUP ACCORDING TO THE GENERAL NOTES AND PROJECT SPECIFICATIONS.

STEEL FINISH COLOR LEGEND

- DENOTES AESS - CATEGORY 2, COATED PER ARCH
- DENOTES AESS - CATEGORY 3, COATED PER ARCH
- DENOTES AESS - CATEGORY 4, COATED PER ARCH
- DENOTES HOT-DIP GALVANIZED STEEL
- DENOTES SHOP PRIMED STEEL
- DENOTES 316L STAINLESS STEEL
- DENOTES HOT-DIP GALVANIZED STEEL AND PAINTED PER ARCH
- DENOTES TRACK SUPPORTING STEEL PAINTED PER ARCH
- DENOTES GALVANIZED METAL DECK

PRINT THIS SHEET IN COLOR

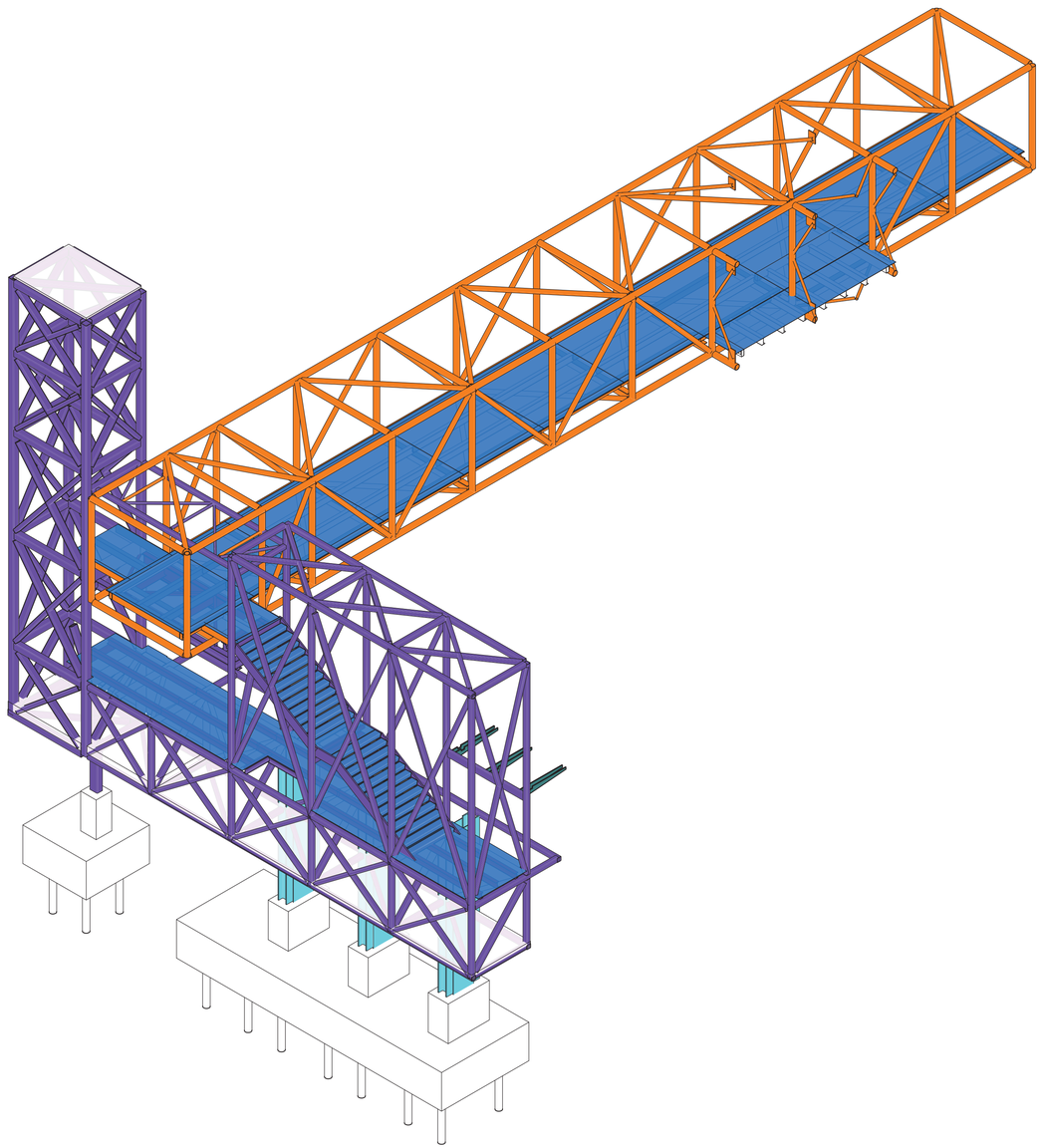

1 3D - PEDESTRIAN BRIDGE NORTH WEST PERSPECTIVE

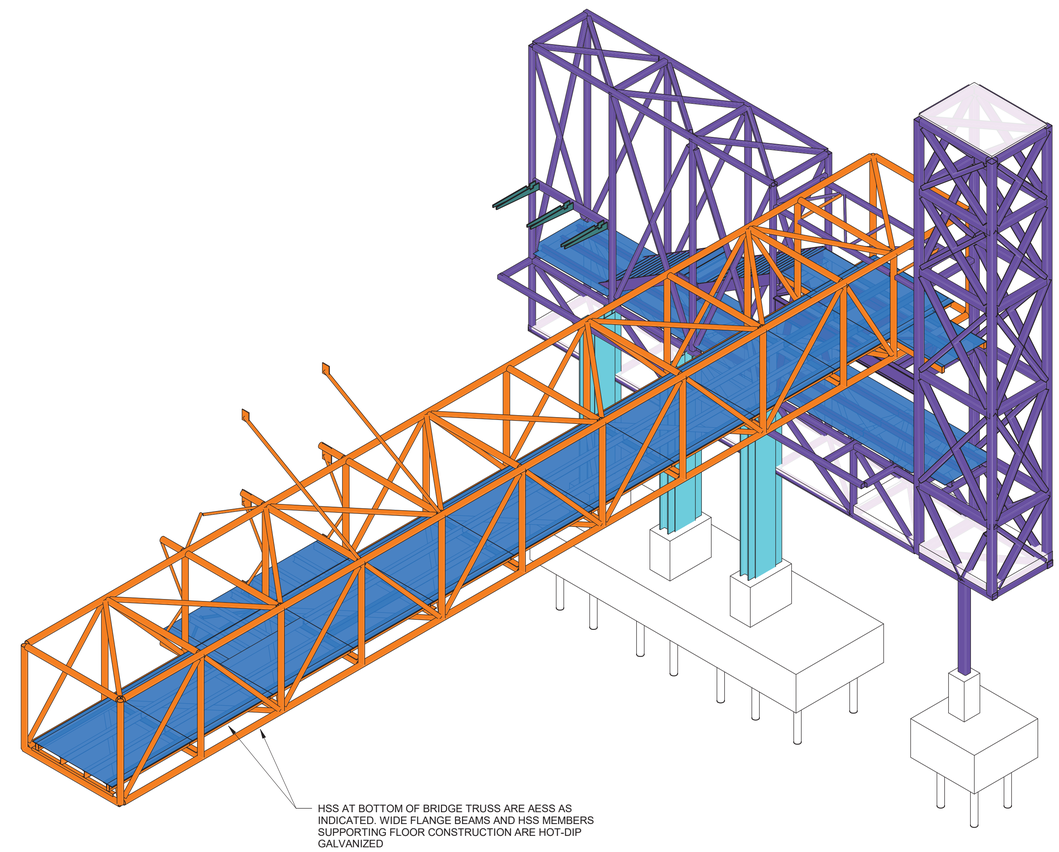

2 3D - PEDESTRIAN BRIDGE SOUTH EAST PERSPECTIVE

SHEET BEST VIEWED IN COLOR

DESIGN BY:									
DRAWN BY:									
CHECKED BY:									
APPROVED BY:			01/27/2020	ISSUE FOR BID	EJT	HMM	TRM		
CDOT/APPROVED BY:		NO.	DATE	REVISIONS	DES.	DRW.	CHK.	DCCO	CDOT

SIMPSON GUMPERTZ & HEGER
Engineering of Structures and Building Enclosures
Simpson Gumpertz & Heger Inc.
135 South LaSalle Street, Suite 3800
Chicago, Illinois 60603
main: 312.754.7500 fax: 312.754.7501
www.sgh.com

PERKINS+WILL
The Wrigley Building
410 North Michigan Ave.
Suite 1600
Chicago, IL 60611
t 312.755.0770
f 312.755.0775
www.perkinswill.com

CDOT
CHICAGO DEPARTMENT OF TRANSPORTATION
DIVISION OF ENGINEERING

154 N DAMEN AVE - DAMEN GREEN LINE STATION

AESS DRAWING

CDOT PROJECT D-7-135 | DATE: 01/27/2020

SPEC. NO.

DRAWING NO. **S43-01**

REVISION NO.

NOTES:
1. REFER TO GENERAL NOTES FOR ADDITIONAL INFORMATION ON ARCHITECTURALLY EXPOSED STRUCTURAL STEEL (AESS)
2. REFER TO AISC 303-16 CODE OF STANDARD PRACTICE FOR AESS SPECIFICATION INFORMATION.
   A. ALL WELDED CONNECTIONS ARE INCLUDED WITHIN MEMBER AESS CATEGORY INDICATED ABOVE.
   B. TWO CONNECTION EXISTS BETWEEN TWO DIFFERENT CATEGORIES, THE CONTRACTOR SHALL FOLLOW THE LARGEST NUMBER CATEGORY FOR THE CONNECTIONS AESS REQUIREMENTS.
3. CONNECTIONS INDICATED ON DRAWINGS REQUIRE A MOCKUP ACCORDING TO THE GENERAL NOTES AND PROJECT SPECIFICATIONS.

STEEL FINISH COLOR LEGEND

- DENOTES AESS - CATEGORY 2, COATED PER ARCH
- DENOTES AESS - CATEGORY 3, COATED PER ARCH
- DENOTES AESS - CATEGORY 4, COATED PER ARCH
- DENOTES HOT-DIP GALVANIZED STEEL
- DENOTES SHOP PRIMED STEEL
- DENOTES 316L STAINLESS STEEL
- DENOTES HOT-DIP GALVANIZED STEEL AND PAINTED PER ARCH
- DENOTES TRACK SUPPORTING STEEL PAINTED PER ARCH
- DENOTES GALVANIZED METAL DECK

PRINT THIS SHEET IN COLOR

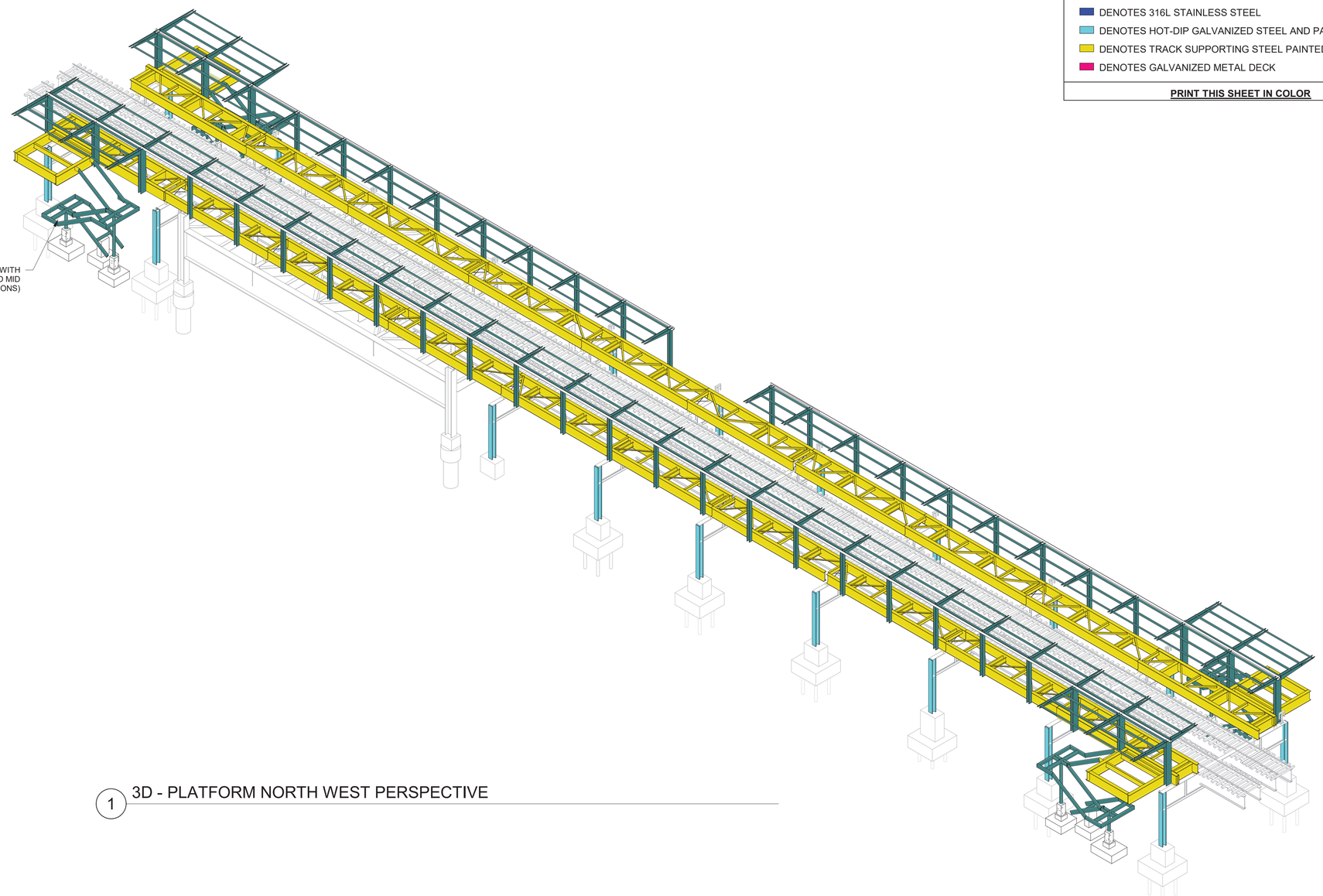

1 3D - PLATFORM NORTH WEST PERSPECTIVE

SHEET BEST VIEWED IN COLOR

DESIGN BY:									
DRAWN BY:									
CHECKED BY:									
APPROVED BY:			01/27/2020	ISSUE FOR BID	EJT	HMM	TRM		
CDOT/APPROVED BY:		NO.	DATE	REVISIONS	DES.	DRW.	CHK.	DCCO	CDOT

SIMPSON GUMPERTZ & HEGER
Engineering of Structures and Building Enclosures
Simpson Gumpertz & Heger Inc.
135 South LaSalle Street, Suite 3800
Chicago, Illinois 60603
main: 312.754.7500 fax: 312.754.7501
www.sgh.com

PERKINS+WILL
The Wrigley Building
410 North Michigan Ave.
Suite 1600
Chicago, IL 60611
t 312.755.0770
f 312.755.0775
www.perkinswill.com

CDOT
CHICAGO DEPARTMENT OF TRANSPORTATION
DIVISION OF ENGINEERING

154 N DAMEN AVE - DAMEN GREEN LINE STATION

AESS DRAWING

CDOT PROJECT D-7-135 | DATE: 01/27/2020

SPEC. NO.

DRAWING NO. **S43-02**

REVISION NO.

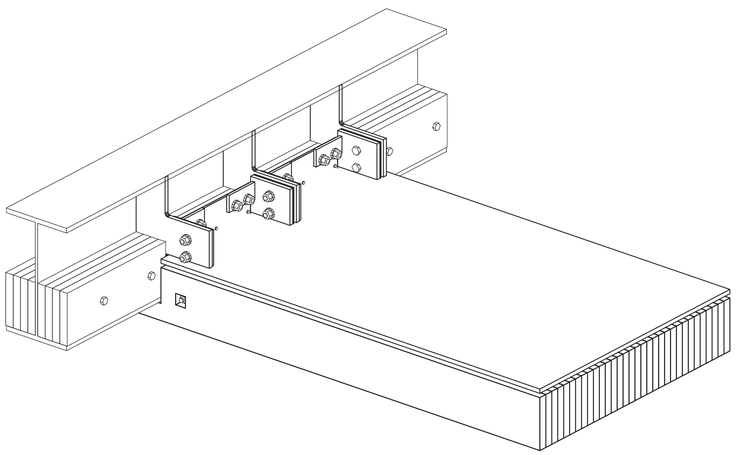

1 TYPICAL NLT PANEL AXONOMETRIC

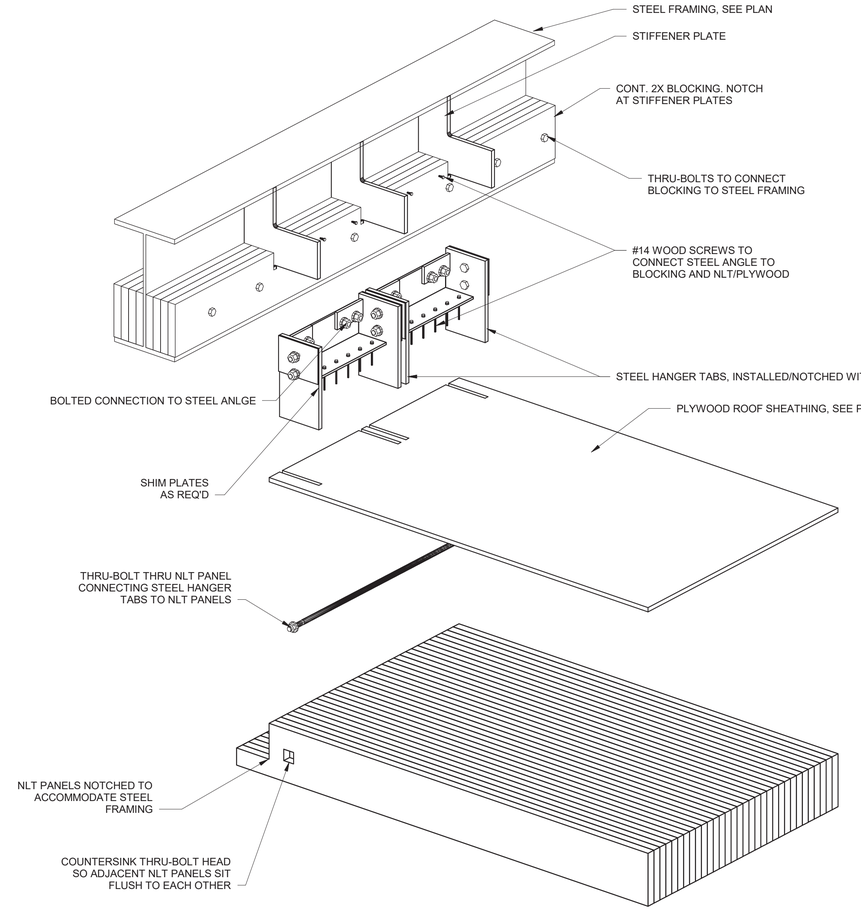

2 TYPICAL NLT PANEL AXONOMETRIC - EXPLODED

DESIGN BY:									
DRAWN BY:									
CHECKED BY:									
APPROVED BY:			01/27/2020	ISSUE FOR BID	EJT	MW	TRM		
CDOT/APPROVED BY:		NO.	DATE	REVISIONS	DES.	DRW.	CHK.	DCCO	CDOT

SIMPSON GUMPERTZ & HEGER
Engineering of Structures and Building Enclosures
Simpson Gumpertz & Heger Inc.
135 South LaSalle Street, Suite 3800
Chicago, Illinois 60603
main: 312.754.7500 fax: 312.754.7501
www.sgh.com

PERKINS+WILL
The Wrigley Building
410 North Michigan Ave.
Suite 1600
Chicago, IL 60611
t 312.755.0770
f 312.755.0775
www.perkinswill.com

CDOT
CHICAGO DEPARTMENT OF TRANSPORTATION
DIVISION OF ENGINEERING

154 N DAMEN AVE - DAMEN GREEN LINE STATION

NAIL LAMINATED TIMBER DETAILS

CDOT PROJECT D-7-135 | DATE: 01/27/2020

SPEC. NO.

DRAWING NO. **S50-00**

REVISION NO.

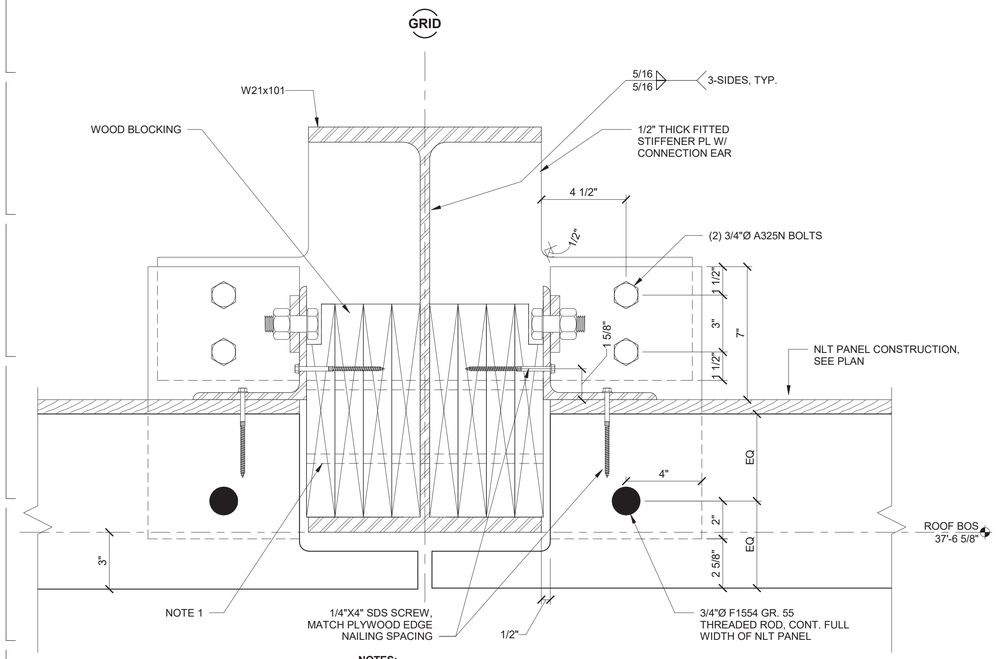

1 NLT TO STEEL BEAM

3" = 1'-0"

NOTES:
1. SEE DETAIL 2/S50-02 FOR BLOCKING AND BLOCKING CONNECTIONS

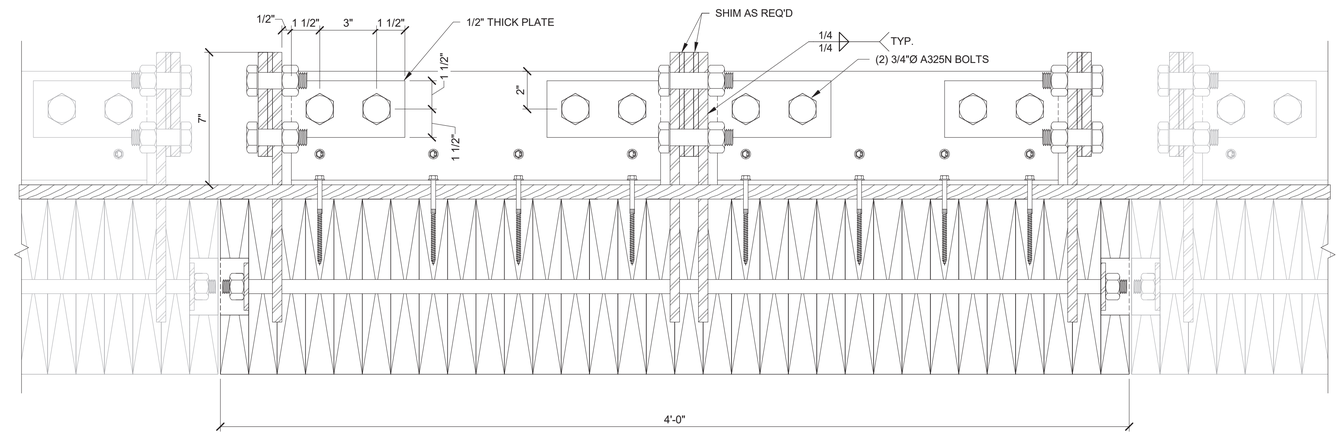

2 SECTION - TYPICAL 4 FT WIDE PREPANELIZED NLT BUILD-UP

3" = 1'-0"

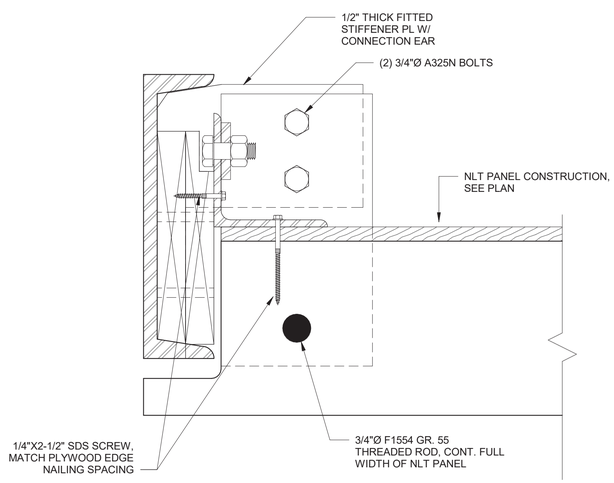

NOTES:
1. SEE DETAIL 2/S50-02 FOR BLOCKING AND BLOCKING CONNECTIONS
2. SEE DETAIL 1/S50-01 FOR BALANCE OF INFORMATION

3 NLT TO STEEL CHANNEL

3" = 1'-0"

DESIGN BY:									
DRAWN BY:									
CHECKED BY:									
APPROVED BY:			01/27/2020	ISSUE FOR BID	EJT	HMM	TRM		
CDOT/APPROVED BY:		NO.	DATE	REVISIONS	DES.	DRW.	CHK.	DCCO	CDOT

SIMPSON GUMPERTZ & HEGER
Engineering of Structures and Building Enclosures
Simpson Gumpertz & Heger Inc.
135 South LaSalle Street, Suite 3800
Chicago, Illinois 60603
main: 312.754.7500 fax: 312.754.7501
www.sgh.com

PERKINS+WILL
The Wrigley Building
410 North Michigan Ave.
Suite 1600
Chicago, IL 60611
t 312.755.0770
f 312.755.0775
www.perkinswill.com

CDOT
CHICAGO DEPARTMENT OF TRANSPORTATION
DIVISION OF ENGINEERING

154 N DAMEN AVE - DAMEN GREEN LINE STATION

NAIL LAMINATED TIMBER DETAILS

CDOT PROJECT D-7-135 | DATE: 01/27/2020

SPEC. NO.

DRAWING NO. **S50-01**

REVISION NO.

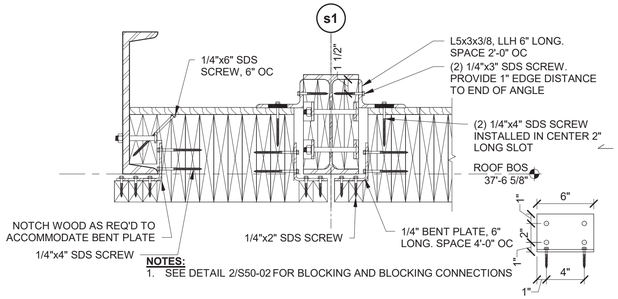

1 SECTION - TYPICAL NLT PARALLEL TO STEEL FRAMING
1 1/2" = 1'-0"

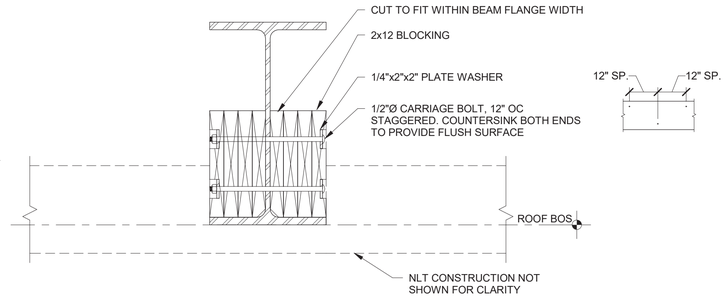

2 TYPICAL WOOD BLOCKING TO STEEL FRAMING
1 1/2" = 1'-0"

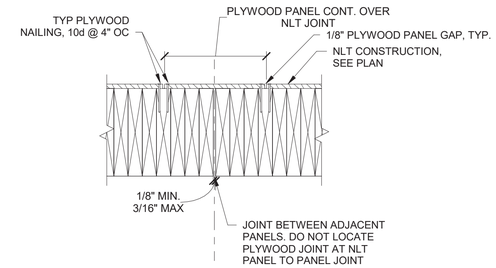

3 TYPICAL PLYWOOD DETAIL
1 1/2" = 1'-0"

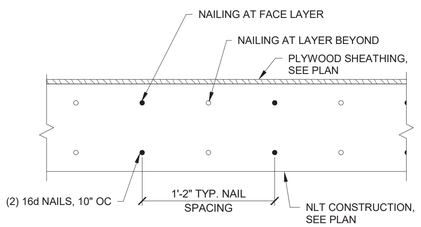

4 TYPICAL NLT NAILING PATTERN
1 1/2" = 1'-0"

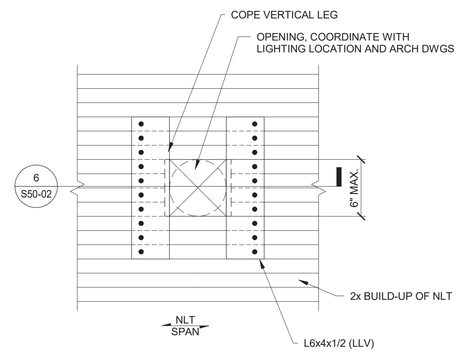

5 PLAN DETAIL - TYPICAL NLT OPENING
1 1/2" = 1'-0"

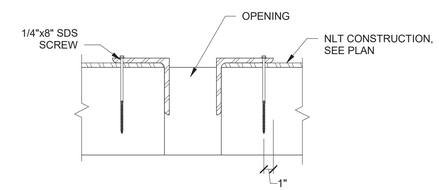

6 SECTION - TYPICAL NLT OPENING
1 1/2" = 1'-0"

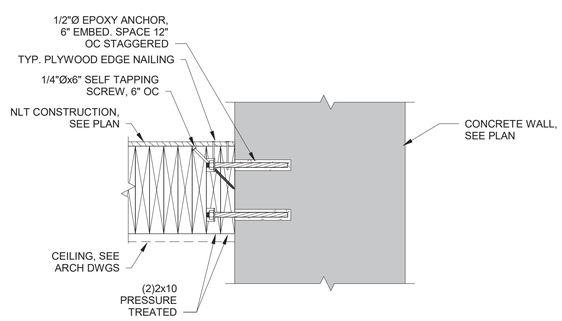

7 TYPICAL NLT TO CONCRETE WALL DETAIL
1 1/2" = 1'-0"

DESIGN BY:									
DRAWN BY:									
CHECKED BY:									
APPROVED BY:			01/27/2020	ISSUE FOR BID	EJT	EJT	TRM		
CDOT/APPROVED BY:		NO.	DATE	REVISIONS	DES.	DRW.	CHK.	DCCO	CDOT

SIMPSON GUMPERTZ & HEGER
Engineering of Structures and Building Enclosures
Simpson Gumpertz & Heger Inc.
135 South LaSalle Street, Suite 3800
Chicago, Illinois 60603
main: 312.754.7500 fax: 312.754.7501
www.sgh.com

PERKINS+WILL
The Wrigley Building
410 North Michigan Ave.
Suite 1600
Chicago, IL 60611
t 312.755.0770
f 312.755.0775
www.perkinswill.com

CDOT
CHICAGO DEPARTMENT OF TRANSPORTATION
DIVISION OF ENGINEERING

154 N DAMEN AVE - DAMEN GREEN LINE STATION

NAIL LAMINATED TIMBER DETAILS

CDOT PROJECT D-7-135 | DATE: 01/27/2020

SPEC. NO.

DRAWING NO. **S50-02**

REVISION NO.

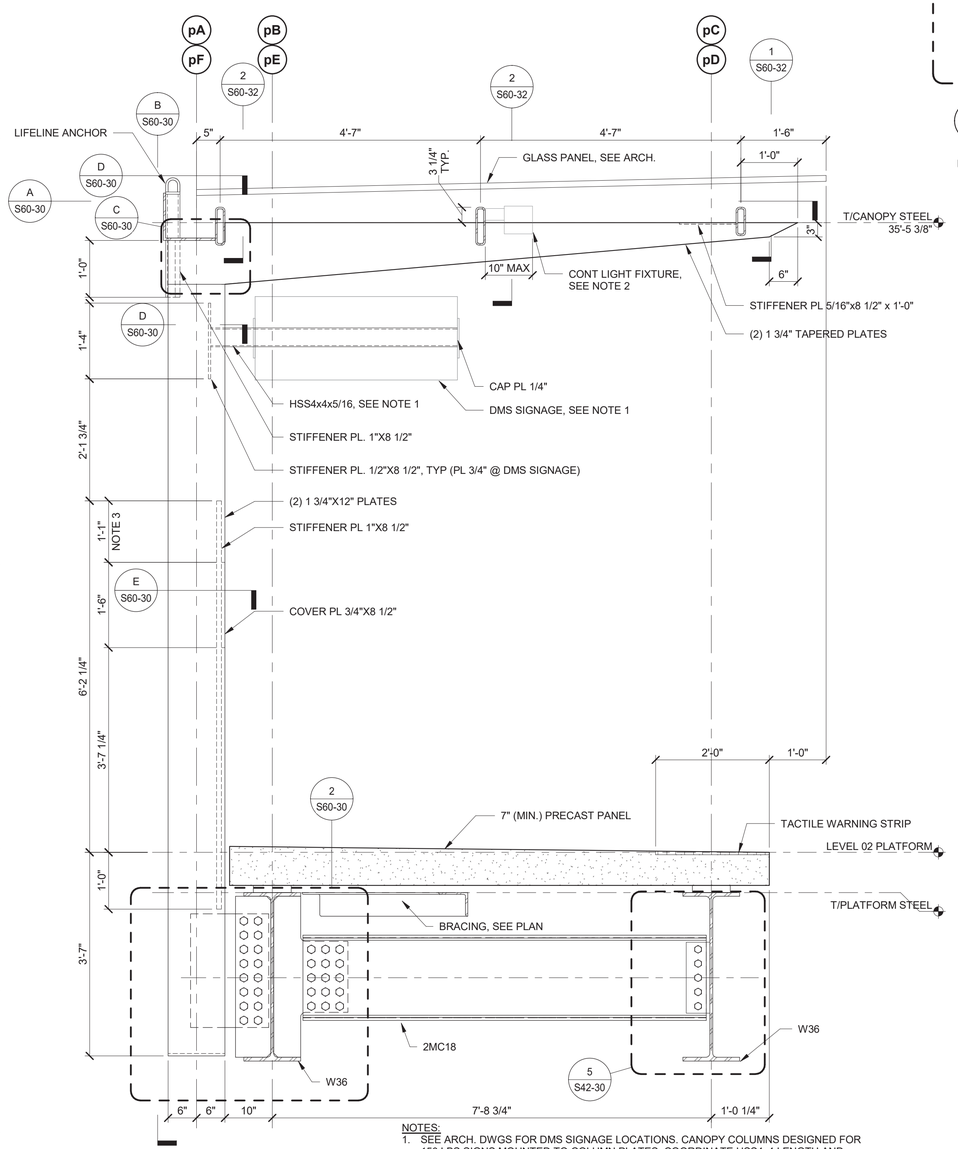

NOTES:
1. SEE ARCH. DWGS FOR DMS SIGNAGE LOCATIONS. CANOPY COLUMNS DESIGNED FOR 150 LBS SIGNS MOUNTED TO COLUMN PLATES. COORDINATE HSS4x4 LENGTH AND OPENING IN CANOPY COLUMN PL WITH DMS MANUFACTURER.
2. SEE ARCH. AND ELECTRICAL DWGS FOR LIGHT FIXTURE. SIGNAGE CONNECTION DESIGN IS DELEGATED TO THE CONTRACTOR.
3. EXTEND STIFFENER PL AT EVERY OTHER COLUMN; SEE ARCH DWGS
4. PROVIDE 3/8"Ø WEEP HOLE AT MID-SPAN OF HSS PURLINS, TYP.

1 PLATFORM CANOPY SECTION
3/4" = 1'-0"

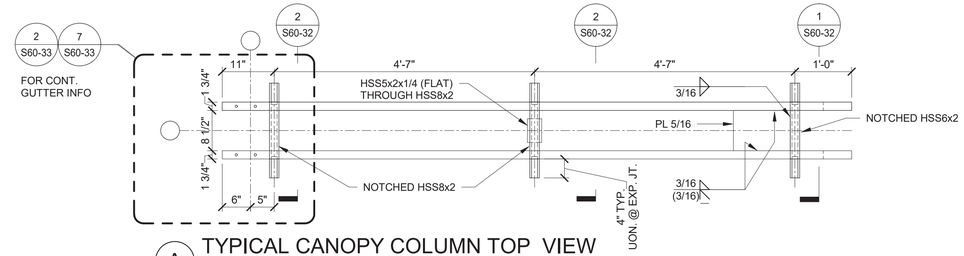

A TYPICAL CANOPY COLUMN TOP VIEW
3/4" = 1'-0"

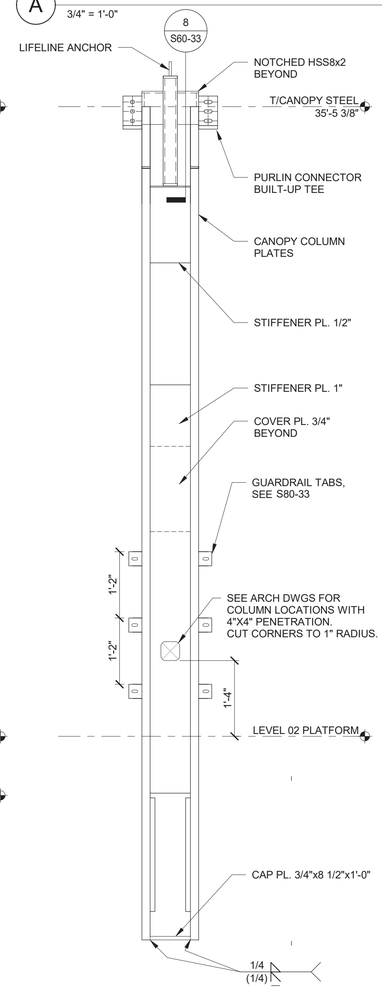

B TYPICAL CANOPY COLUMN END VIEW
3/4" = 1'-0"

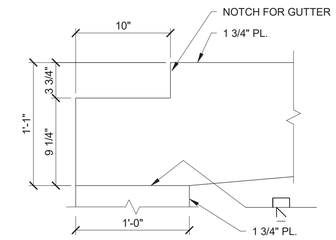

C COLUMN DETAIL
1 1/2" = 1'-0"

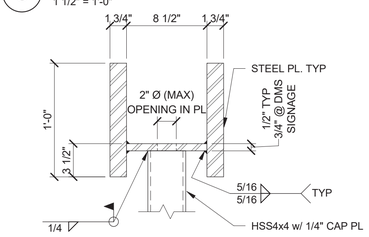

D COLUMN DETAIL
1 1/2" = 1'-0"

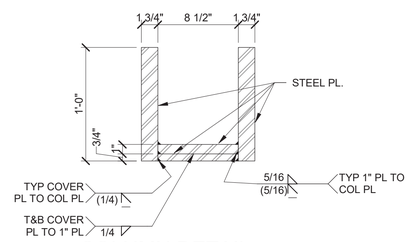

E COLUMN DETAIL
1 1/2" = 1'-0"

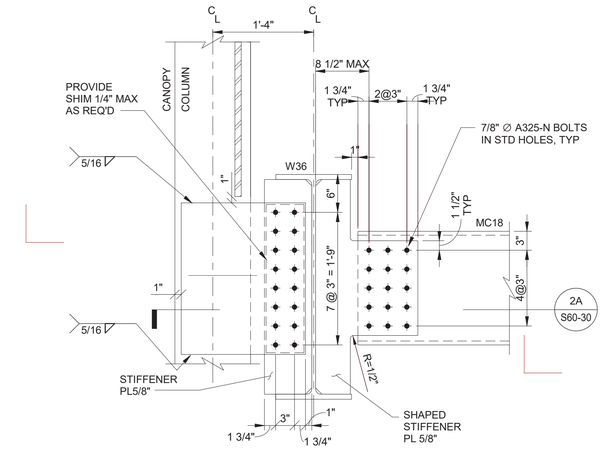

2 CANOPY CONNECTION TO PLATFORM
1" = 1'-0"

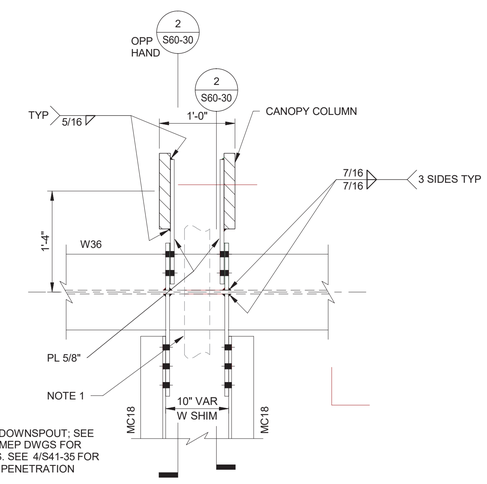

NOTES:
1. PLUMBING DOWNSPOUT; SEE ARCH AND MEP DWGS FOR LOCATIONS. SEE 4/S41-35 FOR BEAM WEB PENETRATION DETAIL.

2A CANOPY CONNECTION TO PLATFORM
1" = 1'-0"

DESIGN BY:								
DRAWN BY:								
CHECKED BY:								
APPROVED BY:			01/27/2020	ISSUE FOR BID	EJT	MW	TRM	
CDOT/APPROVED BY:		NO.	DATE	REVISIONS	DES.	DRW.	CHK.	DCCO	CDOT

SIMPSON GUMPERTZ & HEGER
Engineering of Structures and Building Enclosures
Simpson Gumpertz & Heger Inc.
135 South LaSalle Street, Suite 3800
Chicago, Illinois 60603
main: 312.754.7500 fax: 312.754.7501
www.sgh.com

PERKINS+WILL
The Wrigley Building
410 North Michigan Ave.
Suite 1600
Chicago, IL 60611
t 312.755.0770
f 312.755.0775
www.perkinswill.com

CDOT
CHICAGO DEPARTMENT OF TRANSPORTATION
DIVISION OF ENGINEERING

154 N DAMEN AVE - DAMEN GREEN LINE STATION

PLATFORM - CANOPY - TYPICAL SECTION

CDOT PROJECT D-7-135 | DATE: 01/27/2020

SPEC. NO.

DRAWING NO. **S60-30**

REVISION NO.

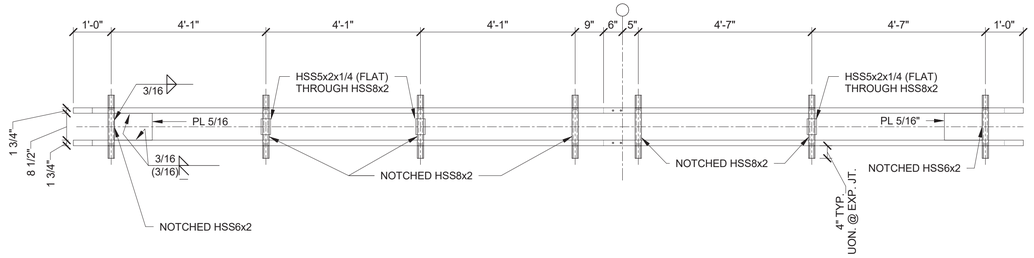

B STAIR CANOPY COLUMN TOP VIEW
1/2" = 1'-0"

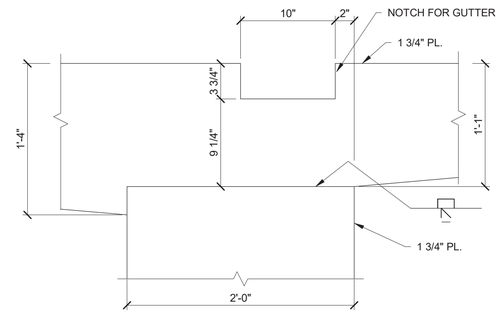

C COLUMN DETAIL
1 1/2" = 1'-0"

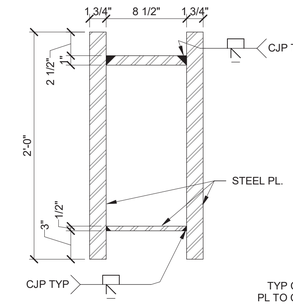

D COLUMN DETAIL
1 1/2" = 1'-0"

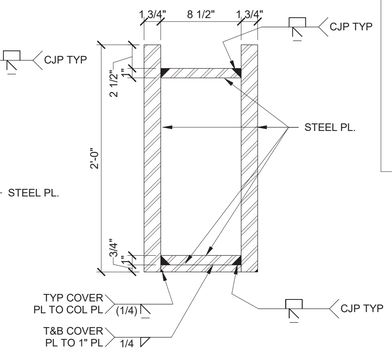

E COLUMN DETAIL
1 1/2" = 1'-0"

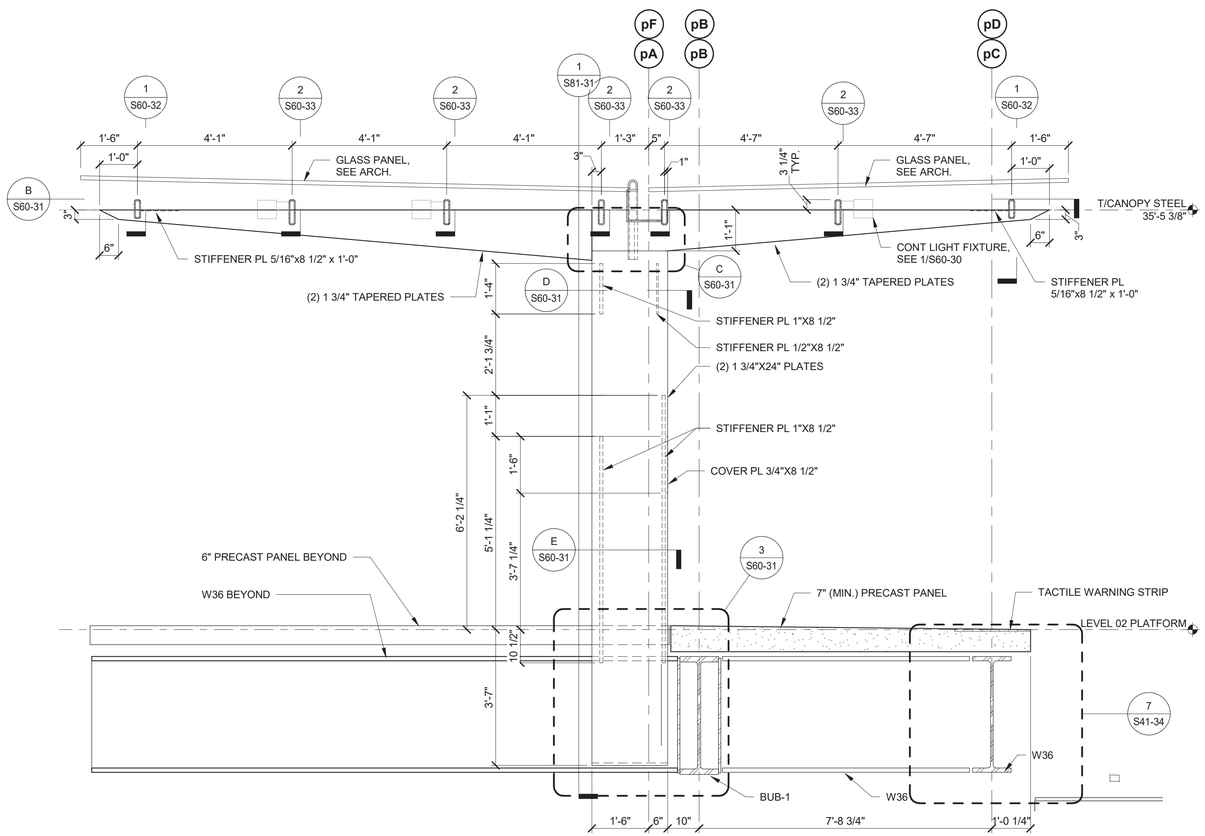

1 STAIR CANOPY SECTION
1/2" = 1'-0"

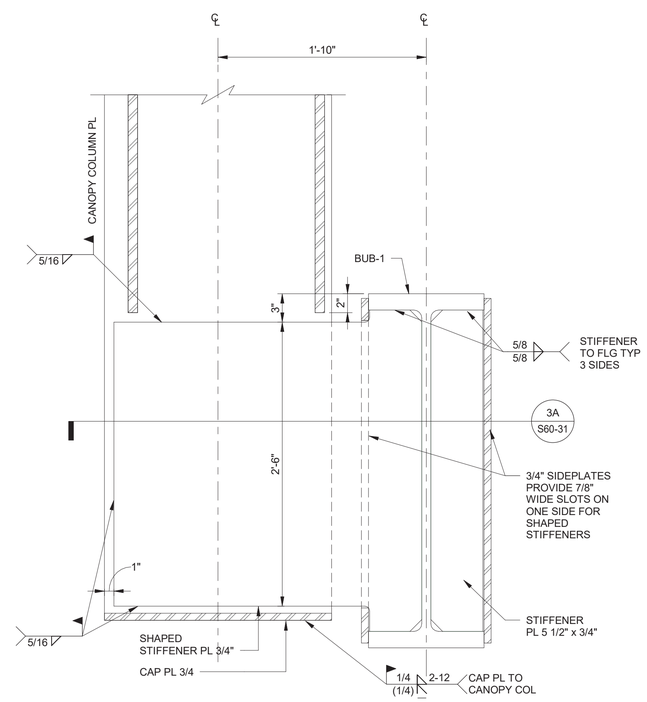

3 TYP CANOPY CONNECTION
1 1/2" = 1'-0"

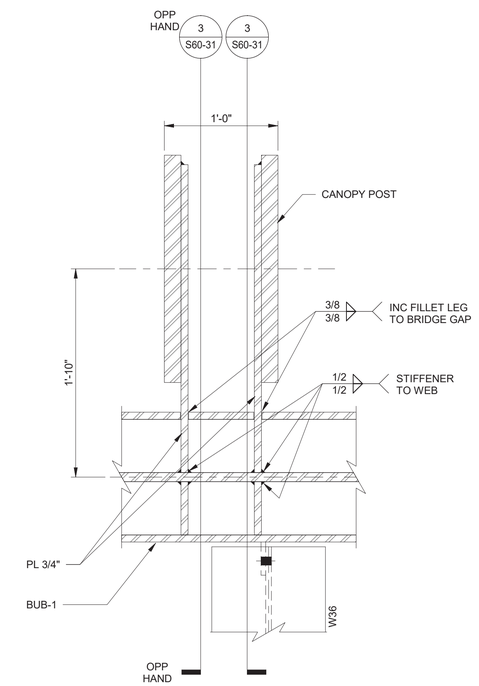

NOTES: ADJACENT W36 MOMENT CONNECTIONS NOT SHOWN

3A SECTION
1 1/2" = 1'-0"

DESIGN BY:									
DRAWN BY:									
CHECKED BY:									
APPROVED BY:			01/27/2020	ISSUE FOR BID	EJT	HMM	TRM		
CDOT/APPROVED BY:		NO.	DATE	REVISIONS	DES.	DRW.	CHK.	DCCO	CDOT

SIMPSON GUMPERTZ & HEGER
Engineering of Structures and Building Enclosures
Simpson Gumpertz & Heger Inc.
135 South LaSalle Street, Suite 3800
Chicago, Illinois 60603
main: 312.754.7500 fax: 312.754.7501
www.sgh.com

PERKINS+WILL
The Wrigley Building
410 North Michigan Ave.
Suite 1600
Chicago, IL 60611
t 312.755.0770
f 312.755.0775
www.perkinswill.com

CDOT
CHICAGO DEPARTMENT OF TRANSPORTATION
DIVISION OF ENGINEERING

154 N DAMEN AVE - DAMEN GREEN LINE STATION

PLATFORM - CANOPY - STAIR SECTION

CDOT PROJECT D-7-135 | DATE: 01/27/2020

SPEC. NO.

DRAWING NO. **S60-31**

REVISION NO.

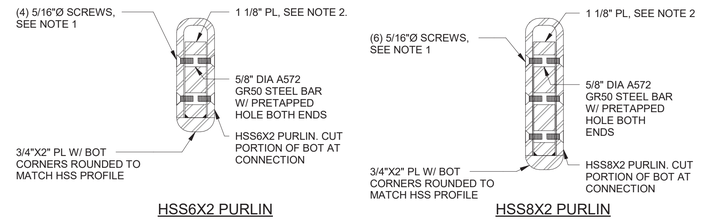

NOTES:
1. SCREWS: HEXAGON SOCKET, FLAT COUNTERSUNK HEAD CAP, ASME B18.3, 5/16"-18X7/8", ZINC-PLATED ALLOY STEEL.
2. **FIXED CONNECTIONS:** 1-11/16" SLOTTED HOLES IN ONE END; STD HOLES AT OTHER END.
   EXPANSION CONNECTIONS: 4 11/16" SLOTTED HOLES AT EXPANSION END; STD HOLES AT OTHER END.

A PURLIN CONNECTION DETAIL
3" = 1'-0"

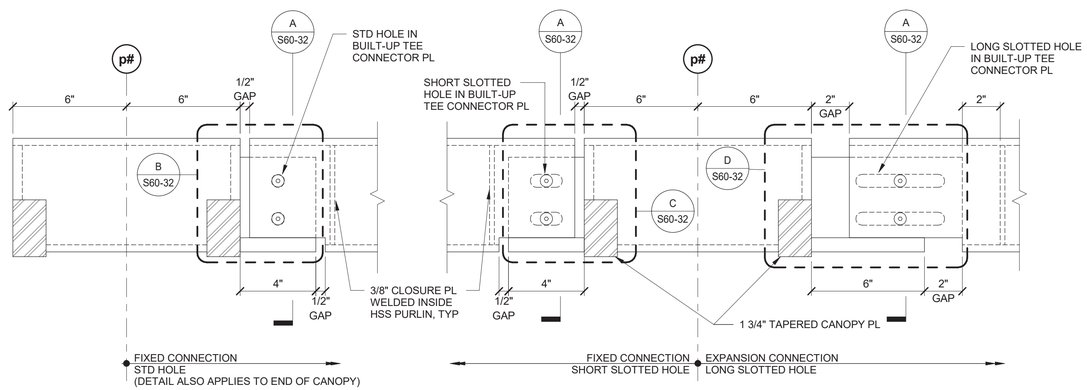

1 TYPICAL HSS 6X2 PURLIN TO CANOPY CONNECTION
3" = 1'-0"

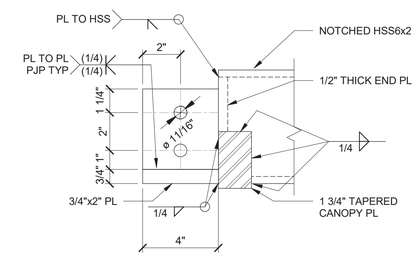

B HSS6X2 STD HOLE
3" = 1'-0"

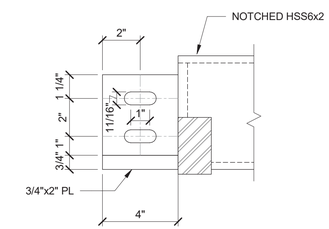

C HSS6X2 SHORT SLOTTED
3" = 1'-0"

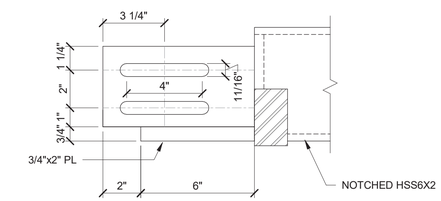

D HSS6X2 LONG SLOT
3" = 1'-0"

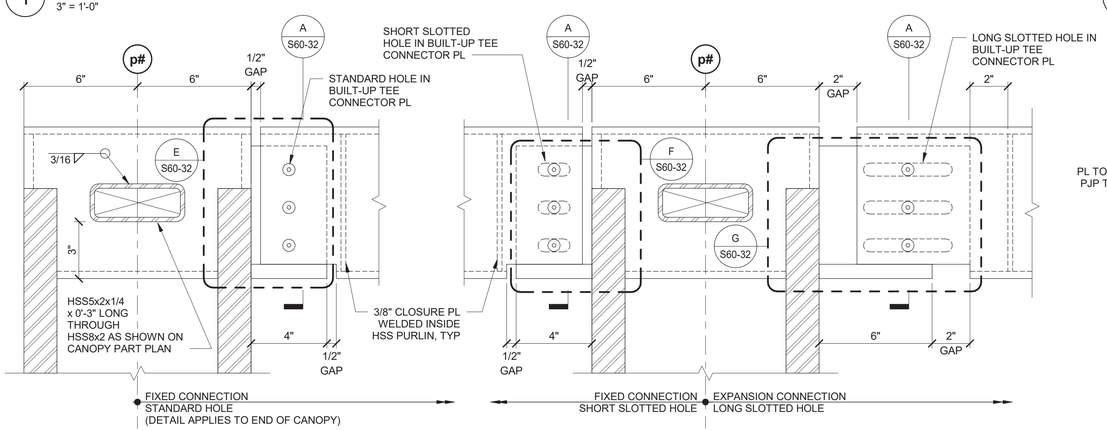

2 TYPICAL HSS 8X2 PURLIN TO CANOPY CONNECTION
3" = 1'-0"

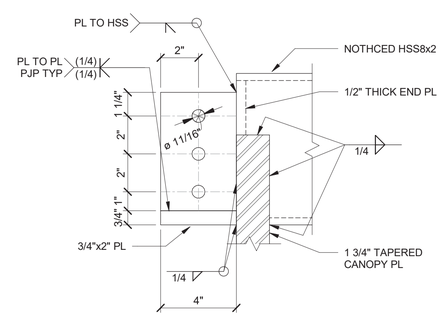

E HSS8x2 STD HOLE
3" = 1'-0"

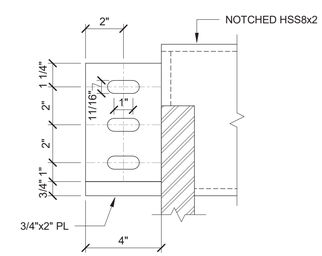

F HSS8x2 SHORT SLOTTED
3" = 1'-0"

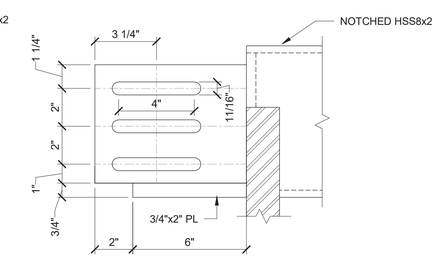

G HSS8x2 LONG SLOTTED
3" = 1'-0"

DESIGN BY:									
DRAWN BY:									
CHECKED BY:									
APPROVED BY:			01/27/2020	ISSUE FOR BID	EJT	HMM	TRM		
CDOT/APPROVED BY:		NO.	DATE	REVISIONS	DES.	DRW.	CHK.	DCCO	CDOT

SIMPSON GUMPERTZ & HEGER
Engineering of Structures and Building Enclosures
Simpson Gumpertz & Heger Inc.
135 South LaSalle Street, Suite 3800
Chicago, Illinois 60603
main: 312.754.7500 fax: 312.754.7501
www.sgh.com

PERKINS+WILL
The Wrigley Building
410 North Michigan Ave.
Suite 1600
Chicago, IL 60611
t 312.755.0770
f 312.755.0775
www.perkinswill.com

CDOT
CHICAGO DEPARTMENT OF TRANSPORTATION
DIVISION OF ENGINEERING

154 N DAMEN AVE - DAMEN GREEN LINE STATION

PLATFORM - CANOPY - PURLIN DETAILS

CDOT PROJECT D-7-135 | DATE: 01/27/2020

SPEC. NO.

DRAWING NO. **S60-32**

REVISION NO.

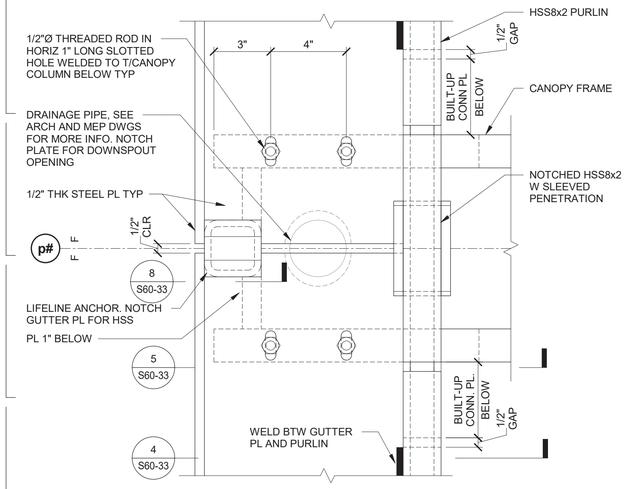

1 PLAN DETAIL AT TYPICAL CANOPY
3" = 1'-0"

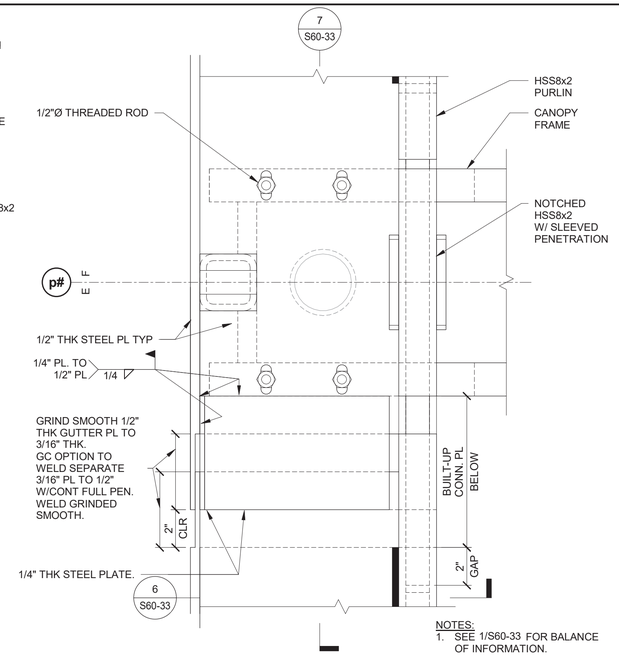

NOTES:
1. SEE 1/S60-33 FOR BALANCE OF INFORMATION.

2 PLAN DETAIL AT EXPANSION JOINT
3" = 1'-0"

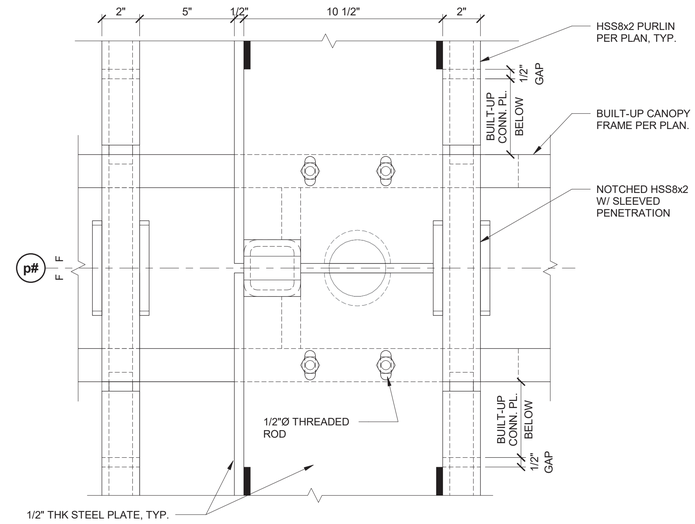

NOTES:
1. SEE 1/S60-33 FOR BALANCE OF INFORMATION.

3 PLAN DETAIL AT STAIR CANOPY
3" = 1'-0"

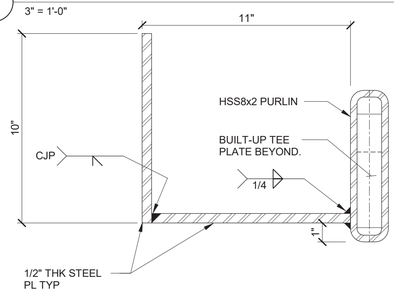

4 GUTTER DETAIL
3" = 1'-0"

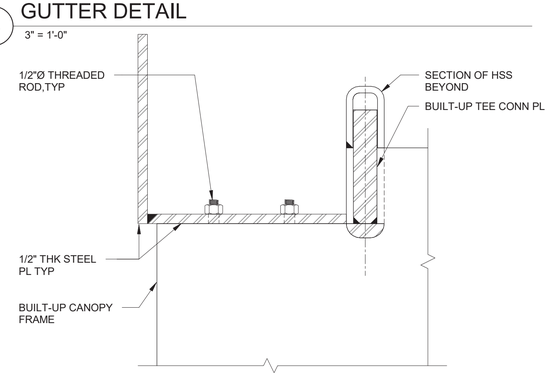

5 GUTTER DETAIL AT COLUMN
3" = 1'-0"

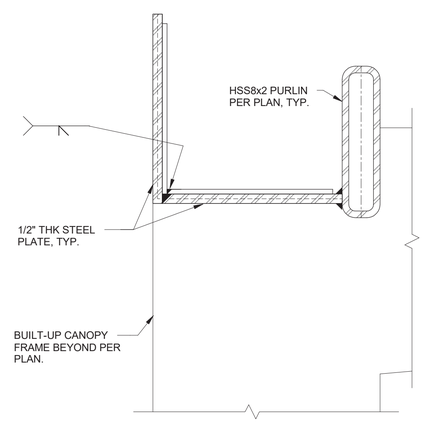

6 GUTTER DETAIL AT EXPANSION JOINT
3" = 1'-0"

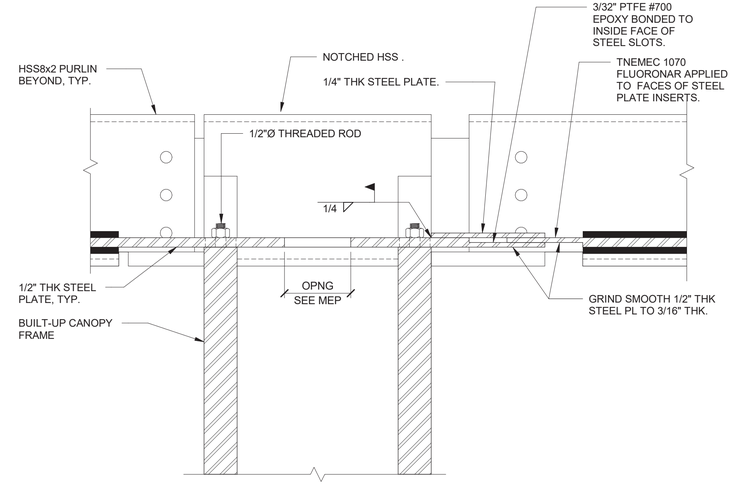

7 GUTTER SECTION AT EXPANSION JOINT
3" = 1'-0"

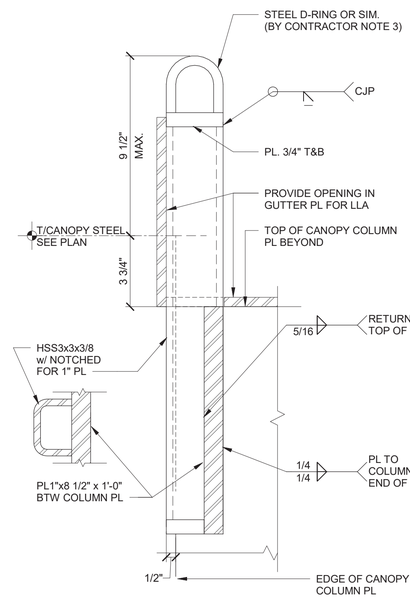

NOTES:
1. SEE ARCH. DWGS FOR LIFELINE ANCHOR (LLA) LOCATIONS.
2. LIFELINE ANCHOR SUPPORT DESIGNED FOR 5 KIP ULTIMATE LOAD IN ANY DIRECTION FOR EXTENSION SHOWN IN THE DETAIL.
3. CONTRACTOR TO PROVIDE D-RING AND ATTACHMENT TO CAP PLATE CAPABLE OF WITHSTANDING 5 KIP ULTIMATE LOAD IN ANY DIRECTION.

8 LIFELINE ANCHOR (LLA) DETAIL
3" = 1'-0"

DESIGN BY:									
DRAWN BY:									
CHECKED BY:									
APPROVED BY:			01/27/2020	ISSUE FOR BID	EJT	HMM	TRM		
CDOT/APPROVED BY:		NO.	DATE	REVISIONS	DES.	DRW.	CHK.	DCCO	CDOT

SIMPSON GUMPERTZ & HEGER
Engineering of Structures and Building Enclosures
Simpson Gumpertz & Heger Inc.
135 South LaSalle Street, Suite 3800
Chicago, Illinois 60603
main: 312.754.7500 fax: 312.754.7501
www.sgh.com

PERKINS+WILL
The Wrigley Building
410 North Michigan Ave.
Suite 1600
Chicago, IL 60611
t 312.755.0770
f 312.755.0775
www.perkinswill.com

CDOT
CHICAGO DEPARTMENT OF TRANSPORTATION
DIVISION OF ENGINEERING

154 N DAMEN AVE - DAMEN GREEN LINE STATION

PLATFORM - CANOPY - GUTTER DETAILS

CDOT PROJECT D-7-135 | DATE: 01/27/2020

SPEC. NO.

DRAWING NO. **S60-33**

REVISION NO.

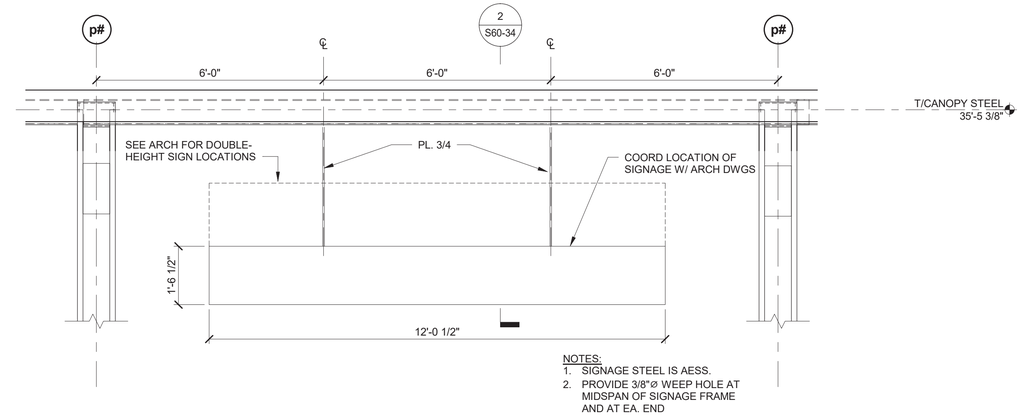

1 SIGNAGE ELEVATION
1/2" = 1'-0"

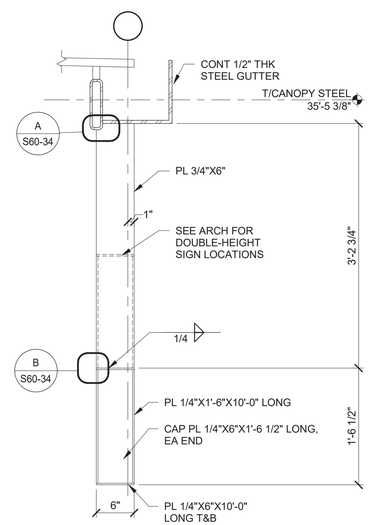

2 SECTION AT SIGNAGE
1" = 1'-0"

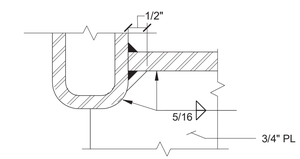

A SECTION AT SIGNAGE HANGER
6" = 1'-0"

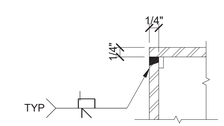

B SIGNAGE PLATE DETAIL
6" = 1'-0"

DESIGN BY:									
DRAWN BY:									
CHECKED BY:									
APPROVED BY:			01/27/2020	ISSUE FOR BID	EJT	HMM	TRM		
CDOT/APPROVED BY:		NO.	DATE	REVISIONS	DES.	DRW.	CHK.	DCCO	CDOT

SIMPSON GUMPERTZ & HEGER
Engineering of Structures and Building Enclosures
Simpson Gumpertz & Heger Inc.
135 South LaSalle Street, Suite 3800
Chicago, Illinois 60603
main: 312.754.7500 fax: 312.754.7501
www.sgh.com

PERKINS+WILL
The Wrigley Building
410 North Michigan Ave.
Suite 1600
Chicago, IL 60611
t 312.755.0770
f 312.755.0775
www.perkinswill.com

CDOT
CHICAGO DEPARTMENT OF TRANSPORTATION
DIVISION OF ENGINEERING

154 N DAMEN AVE - DAMEN GREEN LINE STATION

PLATFORM - CANOPY - MISC DETAILS

CDOT PROJECT D-7-135 | DATE: 01/27/2020

SPEC. NO.

DRAWING NO. **S60-34**

REVISION NO.

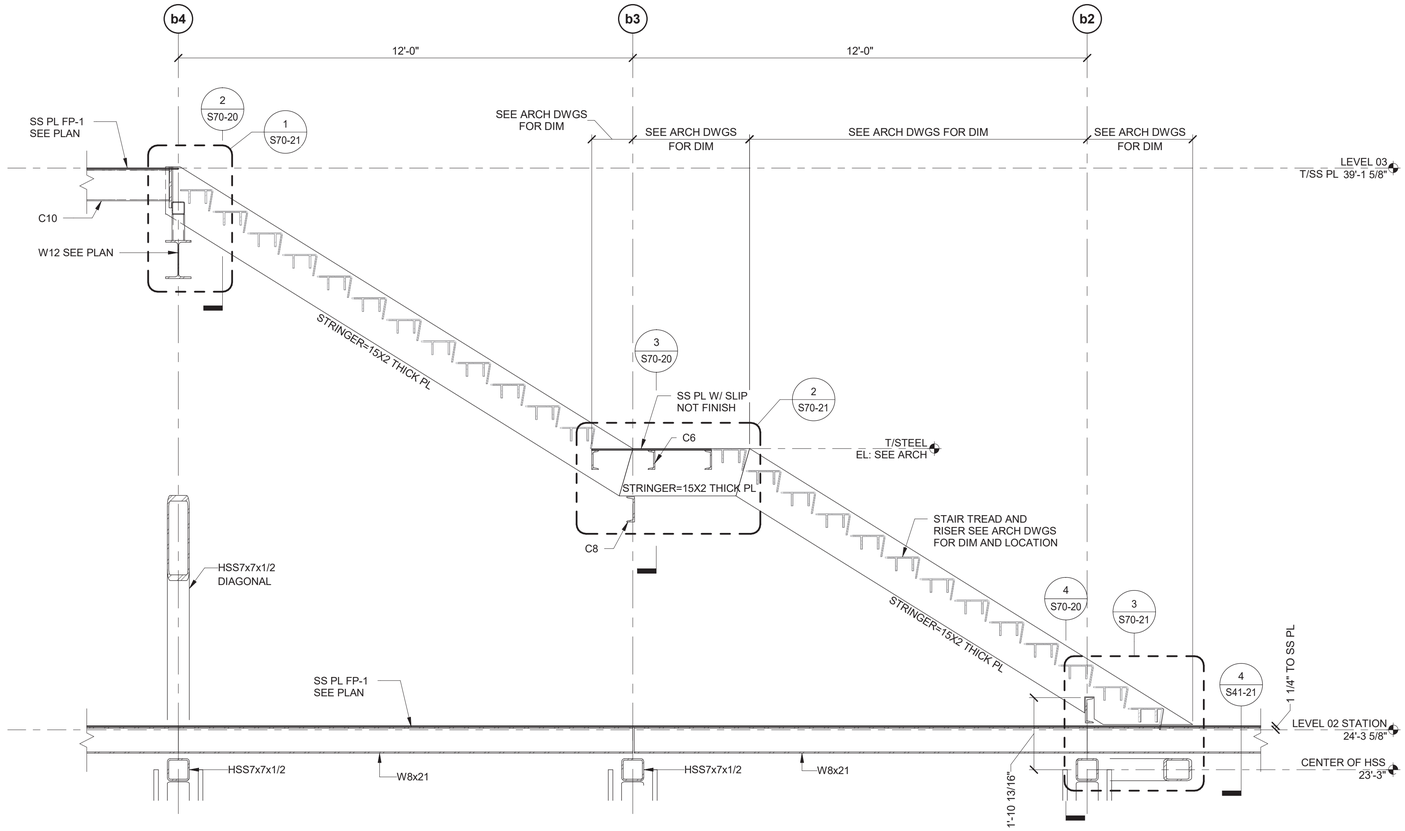

1 NORTH END STAIR SECTION
1/2" = 1'-0"

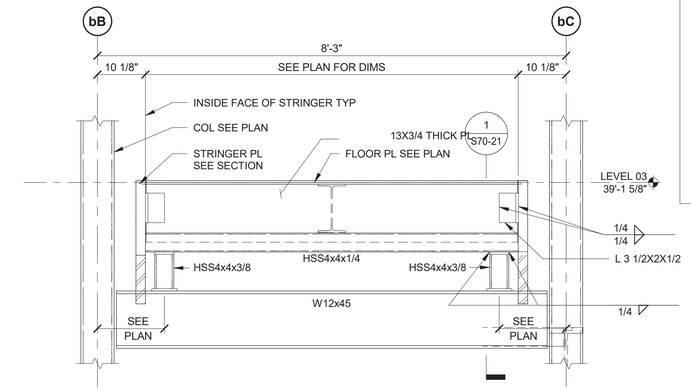

2 NORTH END STAIR TOP OF STAIR SECTION
3/4" = 1'-0"

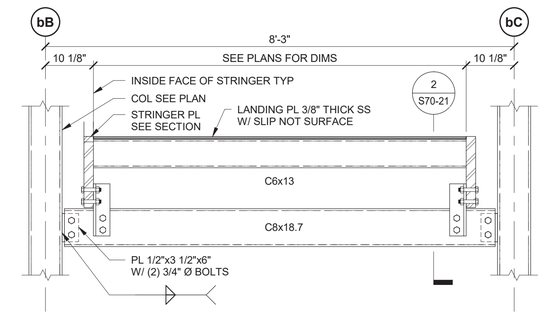

3 NORTH END STAIR LANDING SECTION
3/4" = 1'-0"

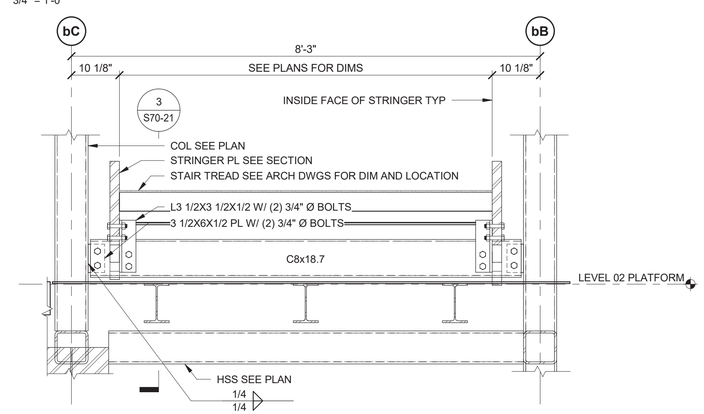

4 NORTH END STAIR BOTTOM OF STAIR SECTION
3/4" = 1'-0"

DESIGN BY:									
DRAWN BY:									
CHECKED BY:									
APPROVED BY:			01/27/2020	ISSUE FOR BID	EJT	HMM	TRM		
CDOT/APPROVED BY:		NO.	DATE	REVISIONS	DES.	DRW.	CHK.	DCCO	CDOT

SIMPSON GUMPERTZ & HEGER
Engineering of Structures and Building Enclosures
Simpson Gumpertz & Heger Inc.
135 South LaSalle Street, Suite 3800
Chicago, Illinois 60603
main: 312.754.7500 fax: 312.754.7501
www.sgh.com

PERKINS+WILL
The Wrigley Building
410 North Michigan Ave.
Suite 1600
Chicago, IL 60611
t 312.755.0770
f 312.755.0775
www.perkinswill.com

CDOT
CHICAGO DEPARTMENT OF TRANSPORTATION
DIVISION OF ENGINEERING

154 N DAMEN AVE - DAMEN GREEN LINE STATION

TOWER/BRIDGE - STAIR SECTION AND DETAILS

CDOT PROJECT D-7-135 | DATE: 01/27/2020

SPEC. NO.

DRAWING NO. **S70-20**

REVISION NO.

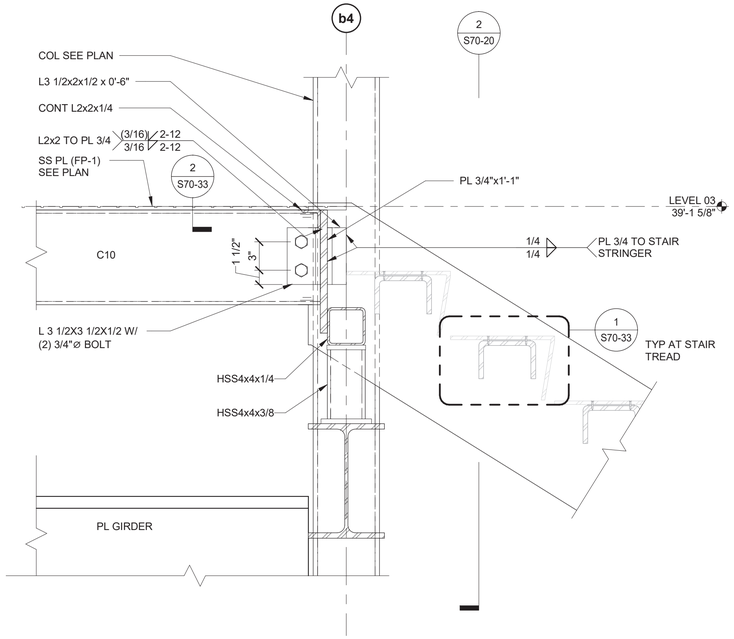

1 NORTH END STAIR TOP CONNECTION
1 1/2" = 1'-0"

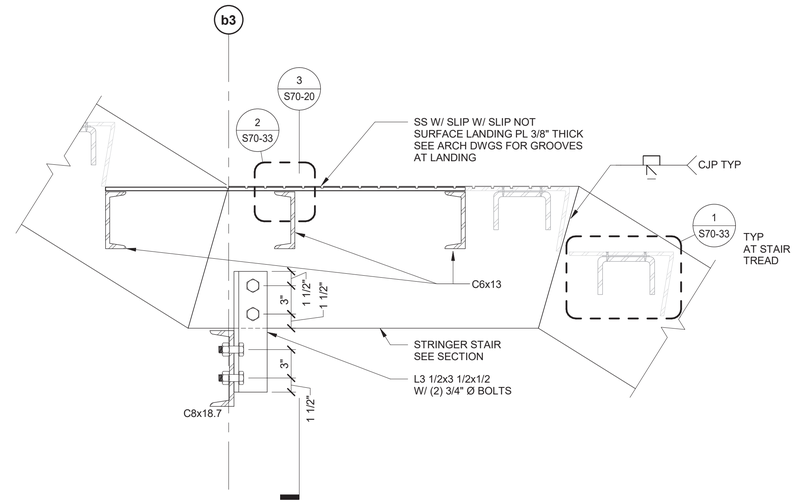

2 NORTH END LANDING CONNECTION
1 1/2" = 1'-0"

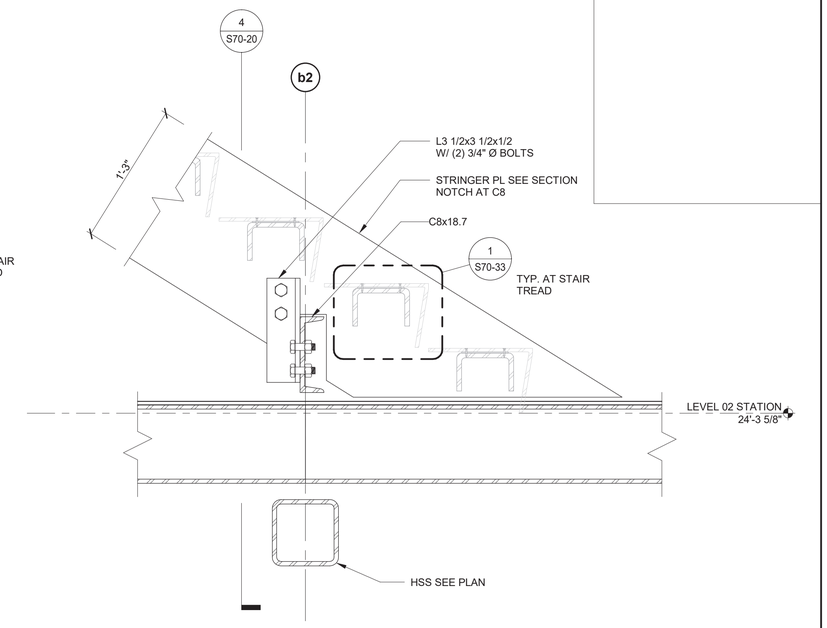

3 NORTH END STAIR BOTTOM CONNECTION
1 1/2" = 1'-0"

DESIGN BY:									
DRAWN BY:									
CHECKED BY:									
APPROVED BY:			01/27/2020	ISSUE FOR BID	EJT	HMM	TRM		
CDOT/APPROVED BY:		NO.	DATE	REVISIONS	DES.	DRW.	CHK.	DCCO	CDOT

SIMPSON GUMPERTZ & HEGER
Engineering of Structures and Building Enclosures
Simpson Gumpertz & Heger Inc.
135 South LaSalle Street, Suite 3800
Chicago, Illinois 60603
main: 312.754.7500 fax: 312.754.7501
www.sgh.com

PERKINS+WILL
The Wrigley Building
410 North Michigan Ave.
Suite 1600
Chicago, IL 60611
t 312.755.0770
f 312.755.0775
www.perkinswill.com

CDOT
CHICAGO DEPARTMENT OF TRANSPORTATION
DIVISION OF ENGINEERING

154 N DAMEN AVE - DAMEN GREEN LINE STATION

TOWER/BRIDGE - STAIR DETAILS

CDOT PROJECT D-7-135 | DATE: 01/27/2020

SPEC. NO.

DRAWING NO. **S70-21**

REVISION NO.

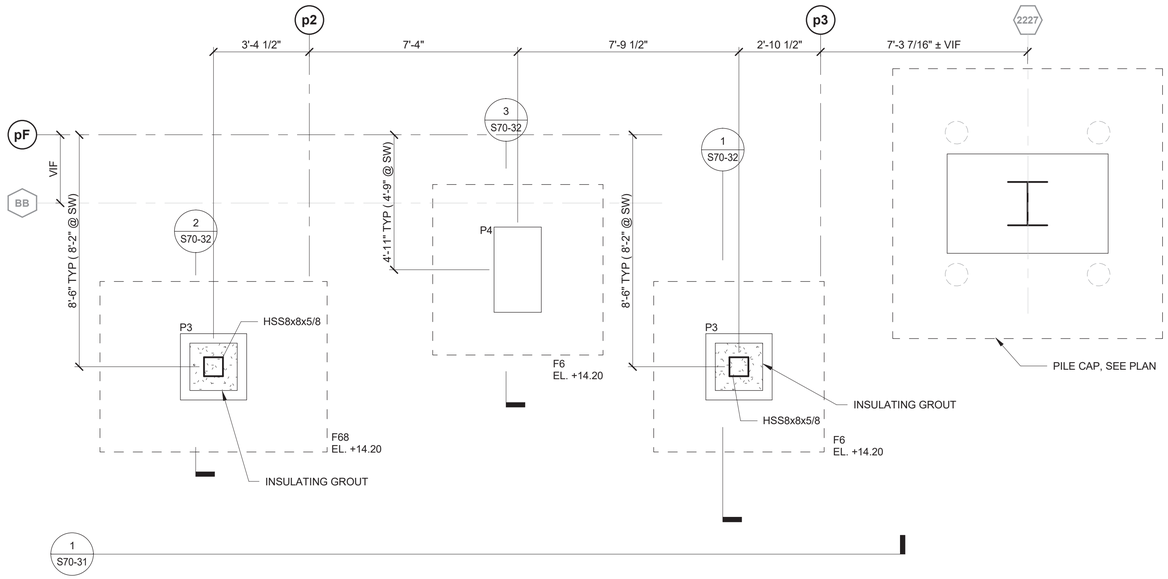

NOTES:
1. EL. +##.## ON PLAN INDICATES TOP OF FOOTING ELEVATION (CCD)
2. SEE FOUNDATION PLANS FOR PIER AND FOOTING LEGEND.
3. SEE CIVIL DWGS FOR GRADE AT BASE OF STAIR.

1 PART PLAN - STAIR FOUNDATION

3/8" = 1'-0"

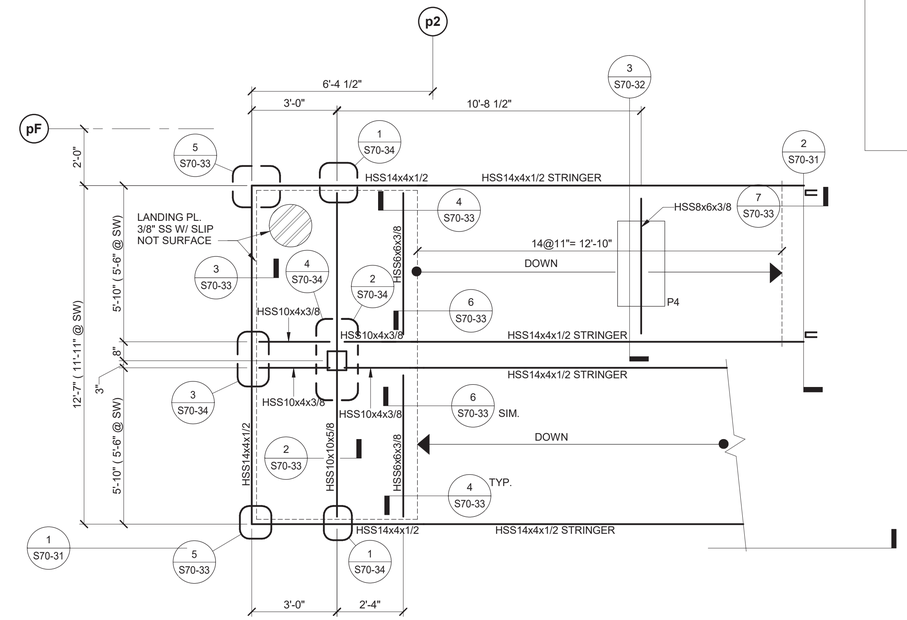

2 PART PLAN - STAIR LOWER LANDING

3/8" = 1'-0"

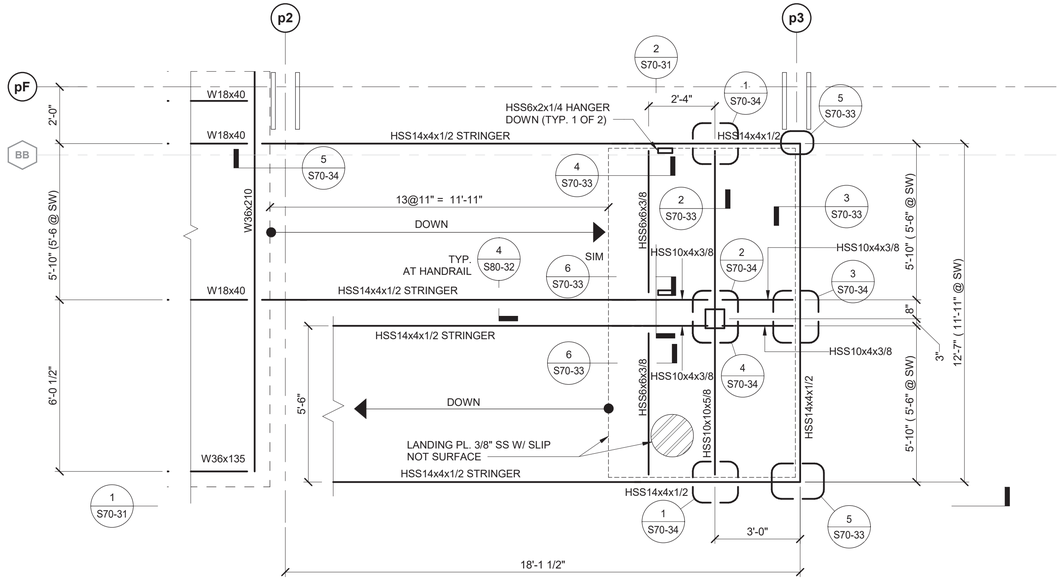

3 PART PLAN - STAIR UPPER LANDING

3/8" = 1'-0"

STAIR NOTES:
1. STAIR STRINGERS AND LANDING FRAMING IS AESS.
2. STAIR LANDING PLATES AND TREAD/RISER PLATES ARE SS WITH SLIP NOT SURFACE.
3. SOUTHWEST STAIR FOUNDATION AND FRAMING SHOWN; NORTHWEST, NORTHEAST, AND SOUTHEAST ARE SIMILAR WITH DIMENSIONAL VARIATIONS AS SHOWN.
4. SEE ARCHITECTURAL DRAWINGS FOR ADDITIONAL INFORMATION.
5. PLAN DIMENSIONS ARE CENTER-TO-CENTER (C/C), UON. SEE ARCH FOR CLEAR DIMENSIONS.

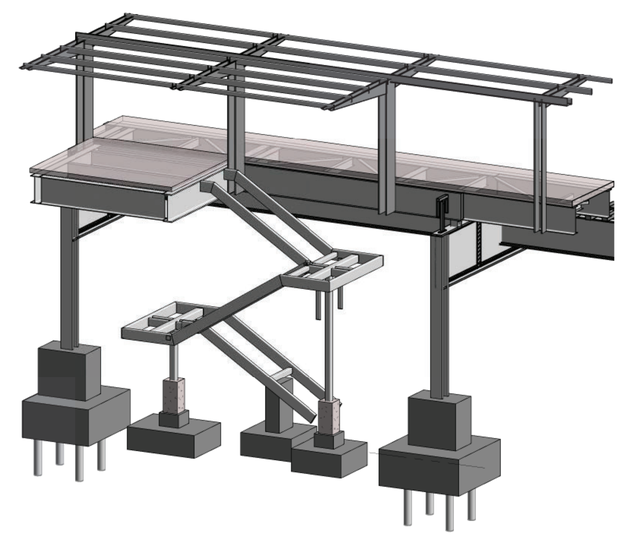

4 3D STAIR

DESIGN BY:									
DRAWN BY:									
CHECKED BY:									
APPROVED BY:			01/27/2020	ISSUE FOR BID	CJB	MW	TRM		
CDOT/APPROVED BY:		NO.	DATE	REVISIONS	DES.	DRW.	CHK.	DCCO	CDOT

SIMPSON GUMPERTZ & HEGER
Engineering of Structures and Building Enclosures
Simpson Gumpertz & Heger Inc.
135 South LaSalle Street, Suite 3800
Chicago, Illinois 60603
main: 312.754.7500 fax: 312.754.7501
www.sgh.com

PERKINS+WILL
The Wrigley Building
410 North Michigan Ave.
Suite 1600
Chicago, IL 60611
t 312.755.0770
f 312.755.0775
www.perkinswill.com

CDOT
CHICAGO DEPARTMENT OF TRANSPORTATION
DIVISION OF ENGINEERING

154 N DAMEN AVE - DAMEN GREEN LINE STATION

PLATFORM - STAIR PART PLAN

CDOT PROJECT D-7-135 | DATE: 01/27/2020

SPEC. NO.

DRAWING NO. **S70-30**

REVISION NO.

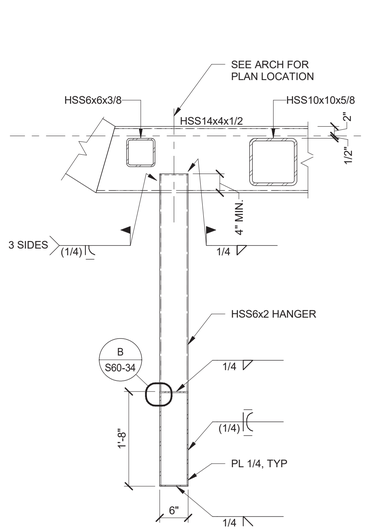

3 STAIR SIGNAGE SECTION
3/4" = 1'-0"

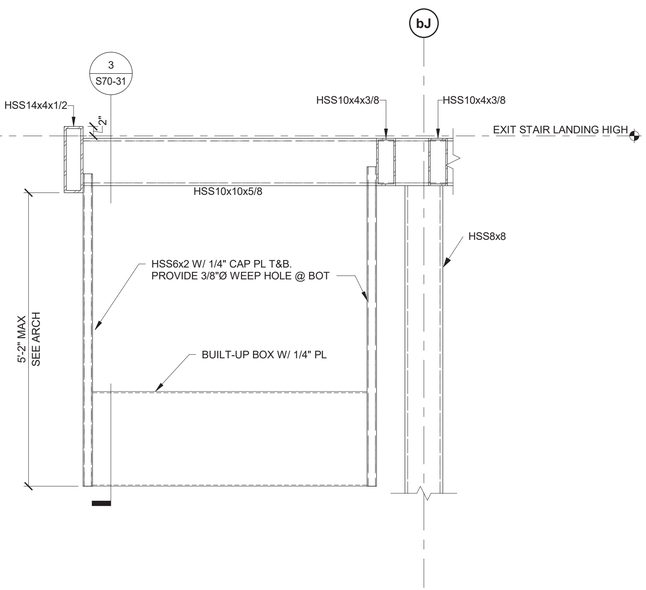

2 STAIR SIGNAGE SECTION
3/4" = 1'-0"

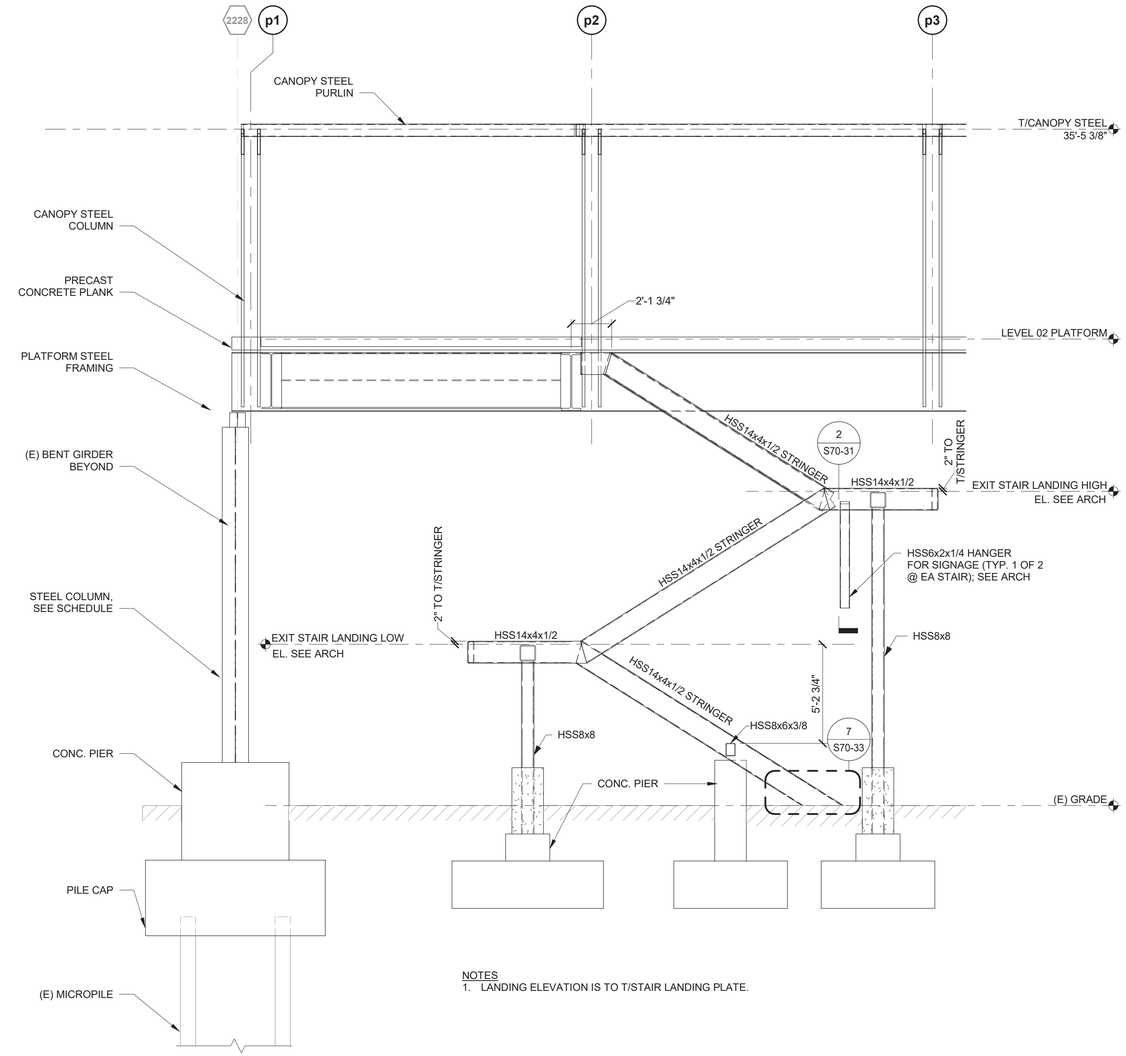

NOTES
1. LANDING ELEVATION IS TO T/STAIR LANDING PLATE.

1 STAIR SECTION
1/4" = 1'-0"

DESIGN BY:									
DRAWN BY:									
CHECKED BY:									
APPROVED BY:			01/27/2020	ISSUE FOR BID	CJB	MW	TRM		
CDOT/APPROVED BY:		NO.	DATE	REVISIONS	DES.	DRW.	CHK.	DCCO	CDOT

SIMPSON GUMPERTZ & HEGER
Engineering of Structures and Building Enclosures
Simpson Gumpertz & Heger Inc.
135 South LaSalle Street, Suite 3800
Chicago, Illinois 60603
main: 312.754.7500 fax: 312.754.7501
www.sgh.com

PERKINS+WILL
The Wrigley Building
410 North Michigan Ave.
Suite 1600
Chicago, IL 60611
t 312.755.0770
f 312.755.0775
www.perkinswill.com

CDOT
CHICAGO DEPARTMENT OF TRANSPORTATION
DIVISION OF ENGINEERING

154 N DAMEN AVE - DAMEN GREEN LINE STATION

PLATFORM - STAIR SECTIONS

CDOT PROJECT D-7-135 | DATE: 01/27/2020

SPEC. NO.

DRAWING NO. **S70-31**

REVISION NO.

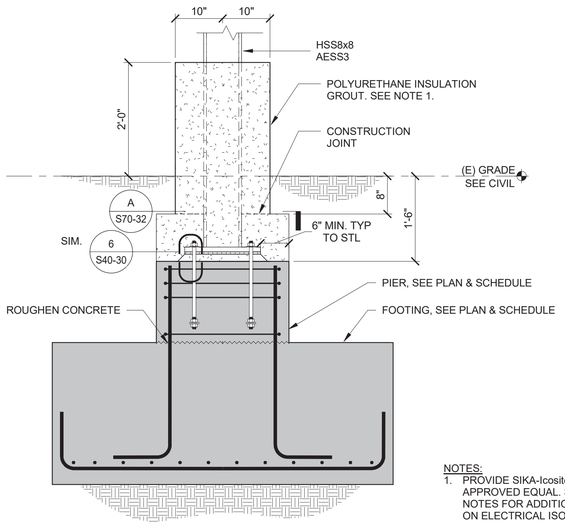

NOTES:
1. PROVIDE SIKA-Icosite KC 300 GROUT OR APPROVED EQUAL. SEE GENERAL NOTES FOR ADDITIONAL INFORMATION ON ELECTRICAL ISOLATION.

1 STAIR SECTION
3/4" = 1'-0"

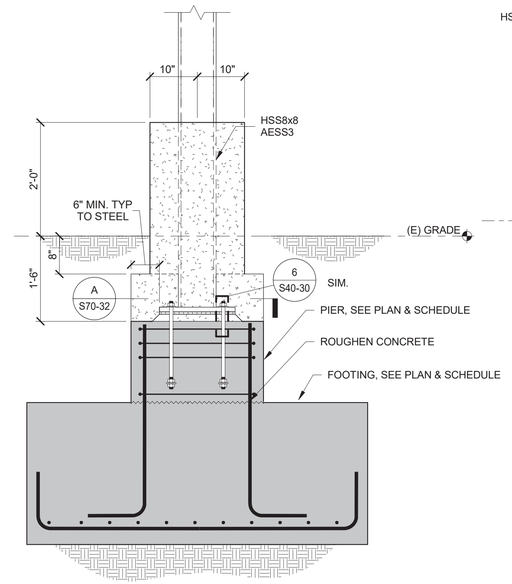

2 STAIR SECTION
3/4" = 1'-0"

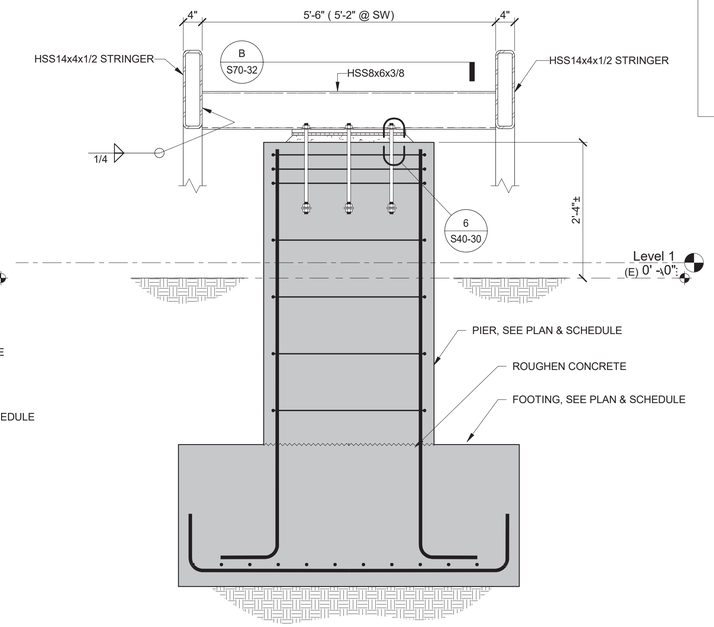

3 STAIR SECTION
3/4" = 1'-0"

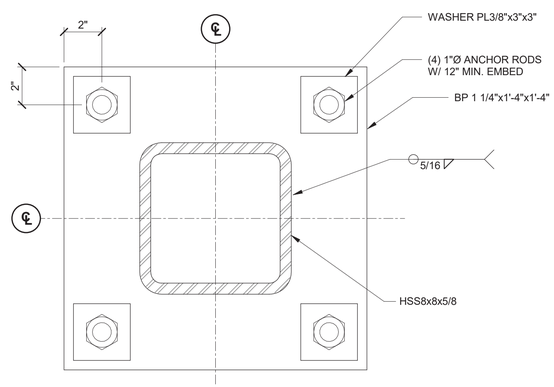

NOTES:
1. SEE BASE PLATE NOTES ON 1/S40-10
2. SEE 6/S40-30 FOR ANCHOR ROD AND BASE PLATE ISOLATION.

A BASE PLATE A DEATIL
3" = 1'-0"

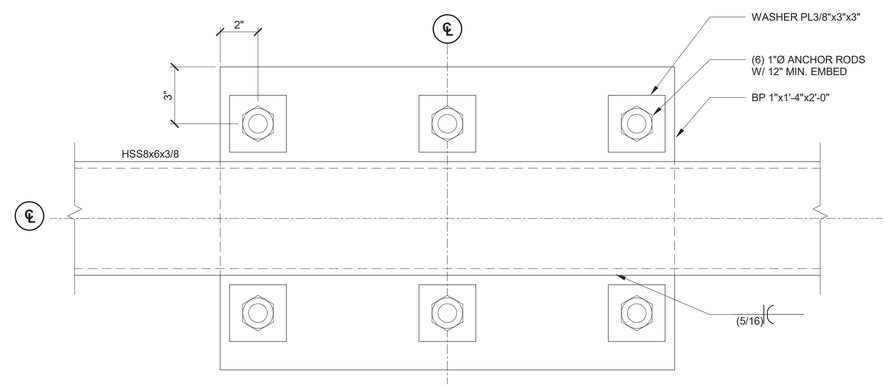

NOTES:
1. SEE BASE PLATE NOTES ON 1/S40-10
2. SEE 6/S40-30 FOR ANCHOR ROD AND BASE PLATE ISOLATION

B BASE PLATE B DETAIL
3" = 1'-0"

DESIGN BY:									
DRAWN BY:									
CHECKED BY:									
APPROVED BY:			01/27/2020	ISSUE FOR BID	EJT	HMM	TRM		
CDOT/APPROVED BY:		NO.	DATE	REVISIONS	DES.	DRW.	CHK.	DCCO	CDOT

SIMPSON GUMPERTZ & HEGER
Engineering of Structures and Building Enclosures
Simpson Gumpertz & Heger Inc.
135 South LaSalle Street, Suite 3800
Chicago, Illinois 60603
main: 312.754.7500 fax: 312.754.7501
www.sgh.com

PERKINS+WILL
The Wrigley Building
410 North Michigan Ave.
Suite 1600
Chicago, IL 60611
t 312.755.0770
f 312.755.0775
www.perkinswill.com

CDOT
CHICAGO DEPARTMENT OF TRANSPORTATION
DIVISION OF ENGINEERING

154 N DAMEN AVE - DAMEN GREEN LINE STATION

PLATFORM - STAIR SECTIONS

CDOT PROJECT D-7-135 | DATE: 01/27/2020

SPEC. NO.

DRAWING NO. **S70-32**

REVISION NO.

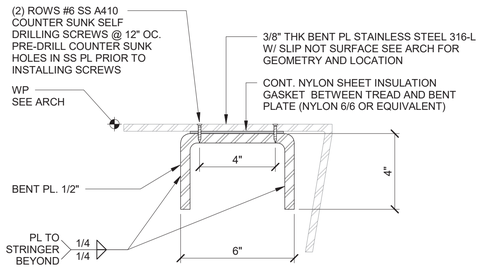

1 DETAIL - TYPICAL STAIR TREAD
3" = 1'-0"

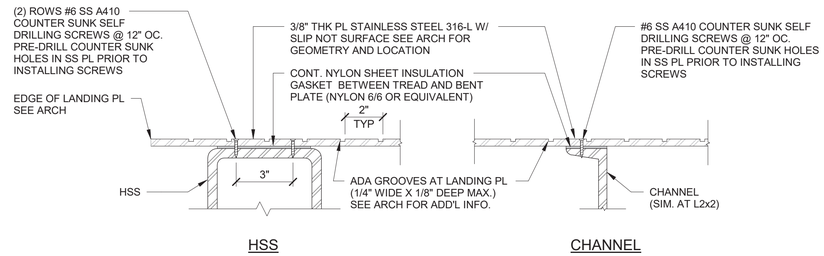

2 DETAIL - TYPICAL LANDING PL
3" = 1'-0"

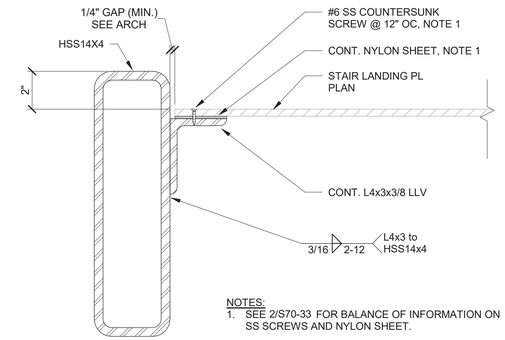

NOTES:
1. SEE 2/S70-33 FOR BALANCE OF INFORMATION ON SS SCREWS AND NYLON SHEET.

3 DETAIL - LANDING PL TO STRINGER
3" = 1'-0"

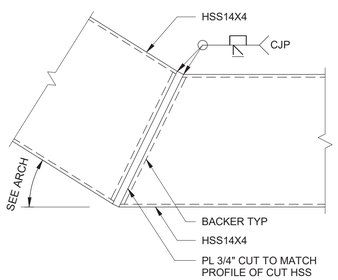

4 DETAIL - KINKED STRINGER
1 1/2" = 1'-0"

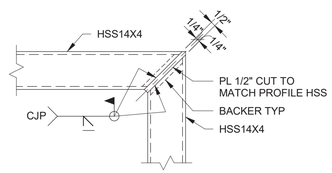

NOTES:
1. GC OPTION TO SHOP WELD BEVELED CORNER. SUBMIT ALTERNATE FIELD SPLICE LOCATIONS TO THE COMMISSIONER FOR REVIEW AND APPROVAL.

5 DETAIL - LANDING CORNER
1 1/2" = 1'-0"

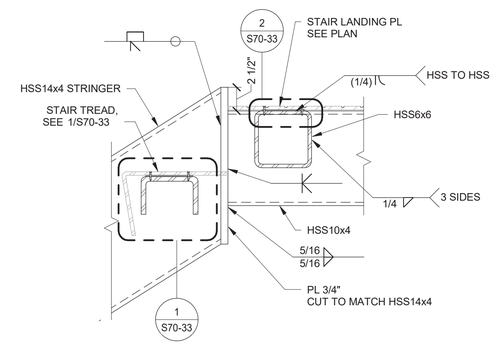

6 DETAIL - STRINGER TO LANDING
1 1/2" = 1'-0"

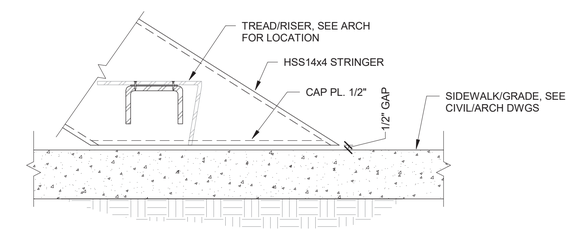

7 DETAIL - STAIR STRINGER AT GRADE
1 1/2" = 1'-0"

DESIGN BY:									
DRAWN BY:									
CHECKED BY:									
APPROVED BY:			01/27/2020	ISSUE FOR BID	EJT	HMM	TRM		
CDOT/APPROVED BY:		NO.	DATE	REVISIONS	DES.	DRW.	CHK.	DCCO	CDOT

SIMPSON GUMPERTZ & HEGER
Engineering of Structures and Building Enclosures
Simpson Gumpertz & Heger Inc.
135 South LaSalle Street, Suite 3800
Chicago, Illinois 60603
main: 312.754.7500 fax: 312.754.7501
www.sgh.com

PERKINS+WILL
The Wrigley Building
410 North Michigan Ave.
Suite 1600
Chicago, IL 60611
t 312.755.0770
f 312.755.0775
www.perkinswill.com

CDOT
CHICAGO DEPARTMENT OF TRANSPORTATION
DIVISION OF ENGINEERING

154 N DAMEN AVE - DAMEN GREEN LINE STATION

PLATFORM - STAIR DETAILS

CDOT PROJECT D-7-135 | DATE: 01/27/2020

SPEC. NO.

DRAWING NO. **S70-33**

REVISION NO.

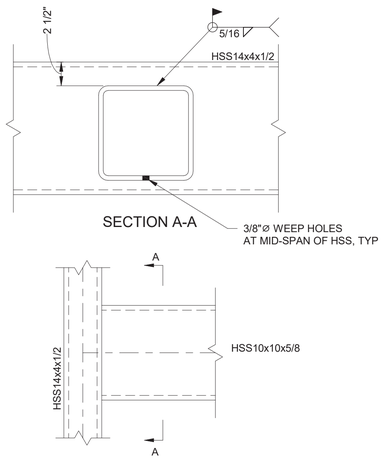

1 DETAIL - HSS TO STRINGER
1 1/2" = 1'-0"

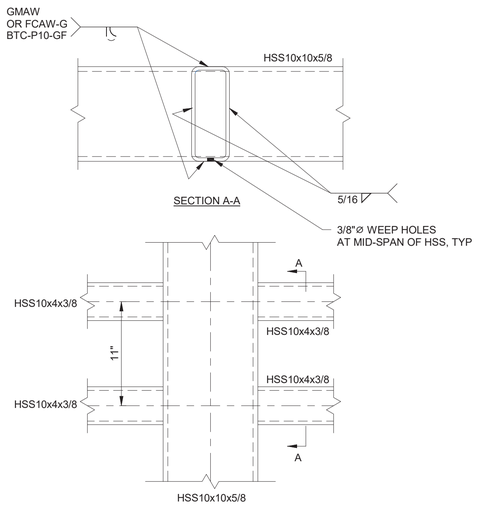

2 DETAIL - HSS-TO-HSS
1 1/2" = 1'-0"

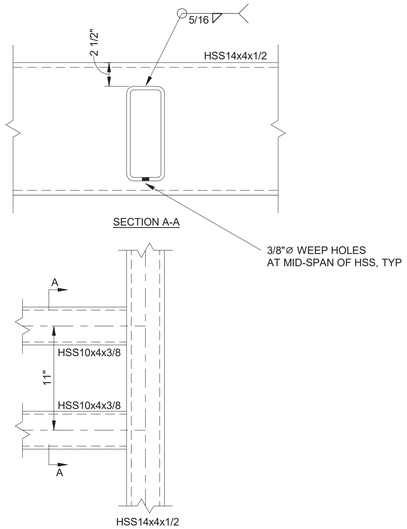

3 DETAIL - HSS-TO-HSS
1 1/2" = 1'-0"

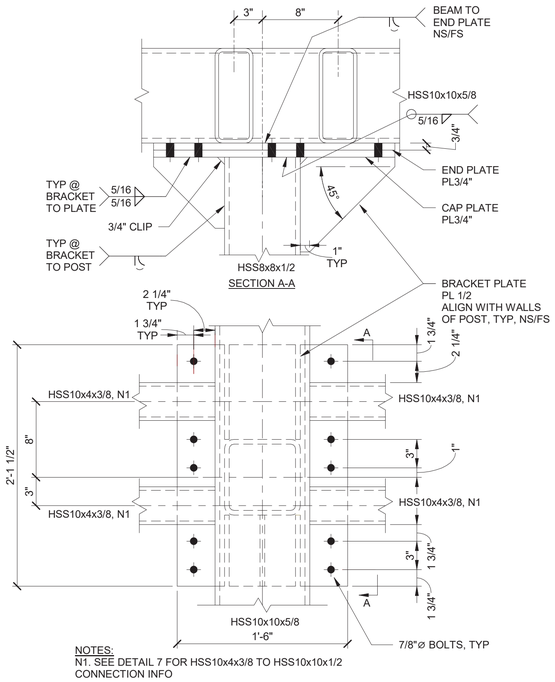

NOTES:
N1. SEE DETAIL 7 FOR HSS10x4x3/8 TO HSS10x10x1/2 CONNECTION INFO

4 DETAIL - HSS8x8 CAP PLATE
1 1/2" = 1'-0"

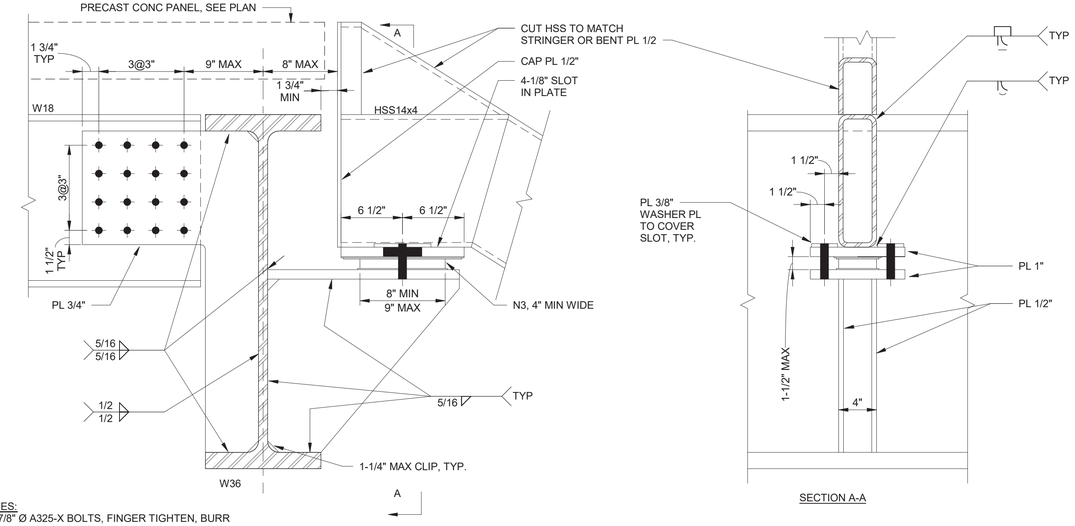

NOTES:
N1. 7/8" Ø A325-X BOLTS, FINGER TIGHTEN, BURR THREADS. STD HOLES UNO, N2
N2. 15/16"X4-1/8" SLOTS IN UPPER PLATE
N3. FABREEKA STRUCTURAL SLIDE BEARING PAD: DELEGATED DESIGN, TO BE DESIGNED BY CONTRACTOR, P = 27 KIP ASD

5 DETAIL - STAIR STRINGER TO PLATFORM
1 1/2" = 1'-0"

DESIGN BY:									
DRAWN BY:									
CHECKED BY:									
APPROVED BY:			01/27/2020	ISSUE FOR BID	EJT	HMM	TRM		
CDOT/APPROVED BY:		NO.	DATE	REVISIONS	DES.	DRW.	CHK.	DCCO	CDOT

SIMPSON GUMPERTZ & HEGER
Engineering of Structures and Building Enclosures
Simpson Gumpertz & Heger Inc.
135 South LaSalle Street, Suite 3800
Chicago, Illinois 60603
main: 312.754.7500 fax: 312.754.7501
www.sgh.com

PERKINS+WILL
The Wrigley Building
410 North Michigan Ave.
Suite 1600
Chicago, IL 60611
t 312.755.0770
f 312.755.0775
www.perkinswill.com

CDOT
CHICAGO DEPARTMENT OF TRANSPORTATION
DIVISION OF ENGINEERING

154 N DAMEN AVE - DAMEN GREEN LINE STATION

PLATFORM - STAIR DETAILS

CDOT PROJECT D-7-135 | DATE: 01/27/2020

SPEC. NO.

DRAWING NO. **S70-34**

REVISION NO.

STAINLESS STEEL NOTES

1. SUBMITTALS
   A. Shop Drawings: Show fabrication of stainless steel components.
   B. Stainless Steel Plates: Submit mill test reports per ASTM A276.

2. STAINLESS STEEL MATERIALS
   A. Metal Surfaces, General: Provide materials with smooth, flat surfaces, unless otherwise indicated. For metal fabrications exposed to view in the completed Work, provide materials without seam marks, roller marks, rolled trade names, or blemishes.
   B. Tubing: ASTM A554, Grade MT 316L, as welded with inside diameter bead not removed.
      1. Annealed after welding condition acceptable if it contributes to and does not affect the specified finish.
      2. Ship tubing with protective coating or wrapping to protect against blemishing.
   C. Bars and Shapes: ASTM A276, Type 316L (Fy = 30 ksi; Fu = 75 ksi)
   D. Plates: ASTM A240, Type 316L (Fy = 30 ksi; Fu = 75 ksi)
   E. Bolts + Screws: ASTM F593F, Type 316 (Fy = 30 ksi; Fu = 75 ksi)
   F. Nuts: ASTM F594, Type 316
   G. Anchor rods and associated nuts and hardware to be stainless steel by HILTI or approved equal.

3. STAINLESS STEEL FINISHES
   A. See architectural drawings for stainless steel finish.
   B. Surface Preparation:
      1. Grind and polish surfaces to produce uniform, directionally textured, polished finish indicated, free of cross scratches.
      2. Remove any heat tint, tool and die marks and stretch lines, or blend into finish.
      3. Run grain of directional finishes with long dimension of each piece.
   C. When polishing is completed, passivate and rinse surfaces. Remove embedded foreign matter and leave surfaces chemically clean.

4. WELDING PROCEDURES
   A. General
      1. Fit up parts in proper alignment with stainless steel or nonferrous jigs and alignment hardware.
      2. Keep electrodes in hermetically sealed containers until ready for use.
      3. Bake electrodes otherwise exposed in holding ovens following manufacturer's instructions at a minimum temperature of 200 degrees Fahrenheit until ready for use.
      4. Make arc strikes in weld metal ahead of weld.
      5. Mask both sides of joint against weld spatter or apply antispatter compound.
   B. The following processes are acceptable subject to compliance with AWS D1.1 Chapter 3 and the limitations of the listed standard specifications.
      1. Shielded Metal Arc Welding
         a. Procedure: ANSI/AWS B2.1-8-023.
      2. Gas Tungsten Arc Welding
         a. Procedure: ANSI/AWS B2.1-8-024.
      3. Gas Metal Arc Welding
      4. Flux Cored Arc Welding
         a. No CO2 in flux.
   C. Qualify procedures and personnel according to the following:
      1. AWS D1.6, "Structural Welding Code--Stainless Steel."

5. WELDING ELECTRODES
   A. Use prequalified filler metals for each welding process per AWS D1.6.
   B. Filler metal composition: ER316L or equivalent with equal or greater chromium, nickel and molybdenum content as base metal.
      1. Deposited weld metal ferrite content: FN 3 to 5.

6. WELD CLEANING
   A. Pre-weld Cleaning
      1. Clean surfaces to be joined including weld groove faces and adjacent surfaces for at least 1 inch on each side of the groove.
      2. Remove all contaminants such as cutting fluids, oil, waxes, oxides, skin oils.
      3. Acceptable cleaning methods:
         a. Brushing with dedicated stainless steel brushes.
         b. Blasting with grit containing no silica products.
         c. Machining and grinding with a chloride free cutting fluid as long as the process does not impede attaining the final surface finish.
         d. Pickling in nitric acid solution.
   B. Inter-pass Cleaning
      1. Clean root pass before welding second side. Grind or chip with stainless steel tools and arc gouge if required to expose sound weld metal.
      2. Grind to bright metal all arc gouged passes before further welding.
      3. Remove from each weld bead all slag by chipping and wire brushing after each pass of multi-pass welds.
   C. Post-weld Cleaning
      1. Solvent clean the surface free of all hydrocarbon contamination.
      2. Remove light oxide film and heat tint on both sides of plates by brushing with a dedicated stainless steel wire brush and pickling with a nitric acid and hydrofluoric acid solution or equivalent pickling paste.

7. INSTALLATION
   A. Cutting, Fitting, and Placement: Perform cutting, drilling, and fitting required for installing metal fabrications. Set metal fabrications accurately in location, alignment, and elevation; with edges and surfaces level, plumb, true, and free of rack; and measured from established lines and levels.
   B. Fastening to In-Place Construction: Provide anchorage devices and fasteners where metal fabrications are required to be fastened to in-place construction.

8. CLEANING
   A. Clean stainless steel by washing thoroughly with clean water and soap, rinsing with clean water, and wiping dry.
   B. Remove any embedded iron from incidental contact with ferrous elements or handling equipment by light grinding with dedicated stainless steel wire brushing and nitric acid passivation.
   C. Solvent clean surfaces of any organic compound contamination from transportation, handling, and erection.

9. PROTECTION
   A. Protect stainless steel finishes from damage during construction period with temporary protective coverings. Remove protective coverings at time of Substantial Completion.
   B. Restore finishes damaged during installation and construction period so no evidence remains of correction work. Return items that cannot be refinished in the field to the shop; make required alterations and refinish entire unit, or provide new units.

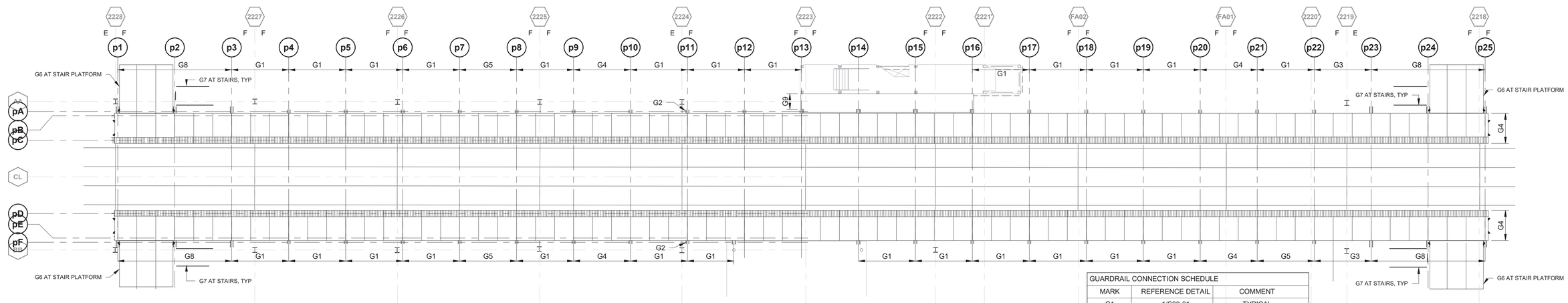

NOTE:
1. "E" AND "F" ON PLAN INDICATE EXPANSION AND FIXED CONNECTIONS, RESPECTIVELY, IN EXISTING TRACK -SUPPORTING STRUCTURE.
2. COORDINATE LOCATION AND EXTENTS OF GUARDRAIL TYPES WITH ARCHITECTURAL DRAWINGS.

1 GUARDRAIL CONNECTION KEY PLAN
1/16" = 1'-0"

GUARDRAIL CONNECTION SCHEDULE

MARK	REFERENCE DETAIL	COMMENT
G1	1/S80-31	TYPICAL
G2	2/S80-33	EJ AT COLUMN
G3	2/S80-31	EJ IN GUARDRAIL
G4	3/S80-31	BENCH
G5	1/S81-30	WINDSCREEN
G6	1/S80-32	STAIR PLATFORM
G7	4/S80-32	STAIR STRINGER
G8	1/S81-31	ENTRY BARRIER
G9	5/S80-32	NORTH END HSS

NOTES:
1. EJ = EXPANSION JOINT
2. GUARDRAIL CONNECTION POSTS AT 4'-0" OC (MAX) - SEE ARCH FOR ADD'L INFORMATION

DESIGN BY:									
DRAWN BY:									
CHECKED BY:									
APPROVED BY:			01/27/2020	ISSUE FOR BID	EJT	HMM	TRM		
CDOT/APPROVED BY:		NO.	DATE	REVISIONS	DES.	DRW.	CHK.	DCCO	CDOT

SIMPSON GUMPERTZ & HEGER
Engineering of Structures and Building Enclosures
Simpson Gumpertz & Heger Inc.
135 South LaSalle Street, Suite 3800
Chicago, Illinois 60603
main: 312.754.7500 fax: 312.754.7501
www.sgh.com

PERKINS+WILL
The Wrigley Building
410 North Michigan Ave.
Suite 1600
Chicago, IL 60611
t 312.755.0770
f 312.755.0775
www.perkinswill.com

CDOT
CHICAGO DEPARTMENT OF TRANSPORTATION
DIVISION OF ENGINEERING

154 N DAMEN AVE - DAMEN GREEN LINE STATION

GUARDRAIL CONNECTION KEY PLAN

CDOT PROJECT D-7-135 | DATE: 01/27/2020

SPEC. NO.

DRAWING NO. S80-30

REVISION NO.

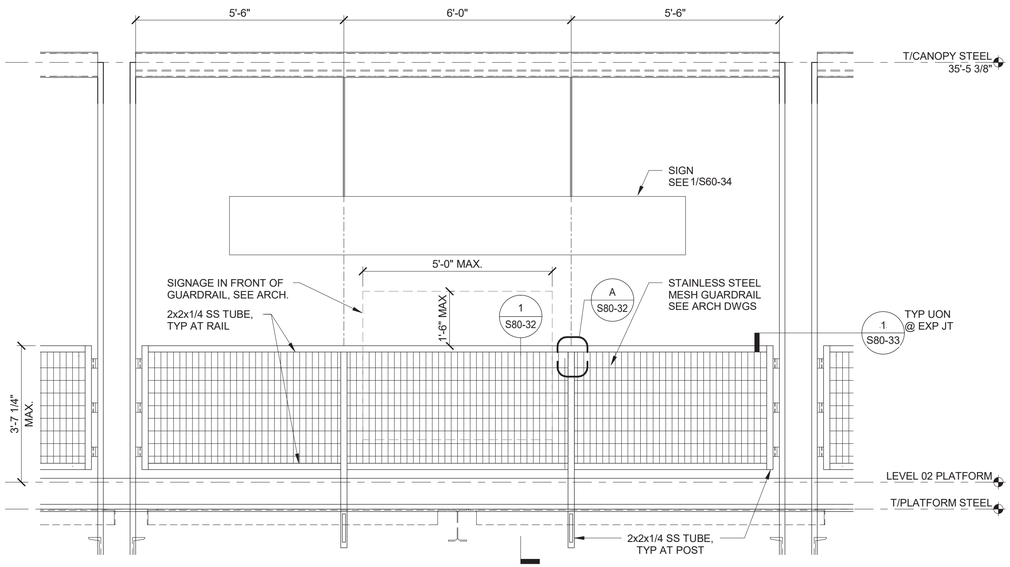

NOTES:
1. PROVIDE SS 1/4" CAP PLATE AT ENDS OF SS TUBES.
2. SEE ARCH DWGS FOR DIMENSIONS AT SOUTH PLATFORM BETWEEN GL p11 AND p12.

1 TYPICAL GUARDRAIL ELEVATION

1/2" = 1'-0"

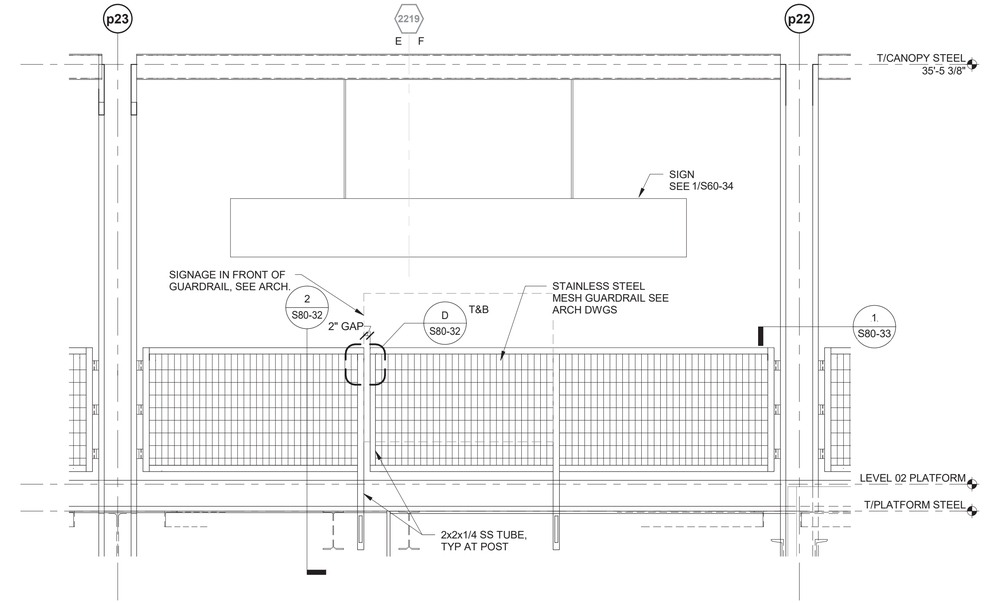

NOTE:
1. "E" AND "F" INDICATE EXPANSION AND FIXED CONNECTIONS, RESPECTIVELY, IN EXISTING TRACK -SUPPORTING STRUCTURE.
2. SEE DETAIL 1 THIS SHEET FOR BALANCE OF INFORMATION.

2 GUARDRAIL ELEVATION AT BENT 2219 EXPANSION JOINT

1/2" = 1'-0"

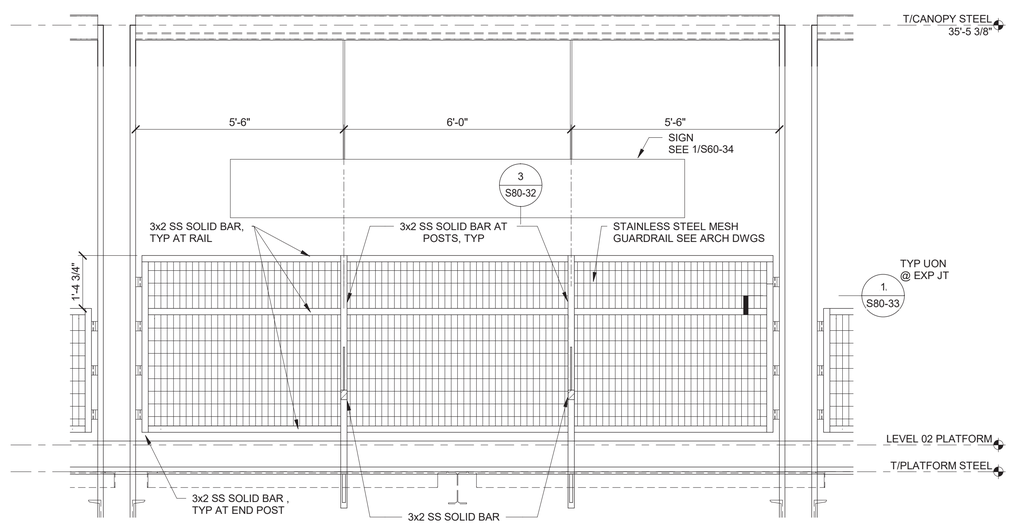

NOTE:
1. SEE ARCHITECTURAL DRAWINGS FOR BENCH LOCATIONS.

3 GUARDRAIL ELEVATION AT BENCH

1/2" = 1'-0"

DESIGN BY:									
DRAWN BY:									
CHECKED BY:									
APPROVED BY:			01/27/2020	ISSUE FOR BID	EJT	HMM	TRM		
CDOT/APPROVED BY:		NO.	DATE	REVISIONS	DES.	DRW.	CHK.	DCCO	CDOT

SIMPSON GUMPERTZ & HEGER
Engineering of Structures and Building Enclosures
Simpson Gumpertz & Heger Inc.
135 South LaSalle Street, Suite 3800
Chicago, Illinois 60603
main: 312.754.7500 fax: 312.754.7501
www.sgh.com

PERKINS+WILL
The Wrigley Building
410 North Michigan Ave.
Suite 1600
Chicago, IL 60611
t 312.755.0770
f 312.755.0775
www.perkinswill.com

CDOT
CHICAGO DEPARTMENT OF TRANSPORTATION
DIVISION OF ENGINEERING

154 N DAMEN AVE - DAMEN GREEN LINE STATION

GUARDRAIL ELEVATIONS

CDOT PROJECT D-7-135 | DATE: 01/27/2020

SPEC. NO.

DRAWING NO. **S80-31**

REVISION NO.

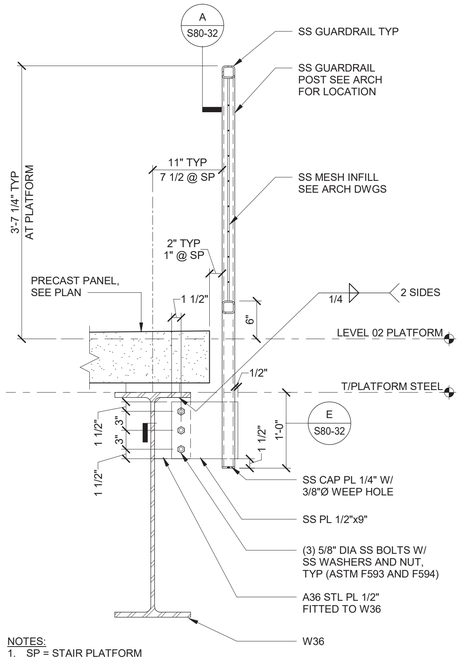

NOTES:
1. SP = STAIR PLATFORM

1 TYPICAL SECTION AT W36
1" = 1'-0"

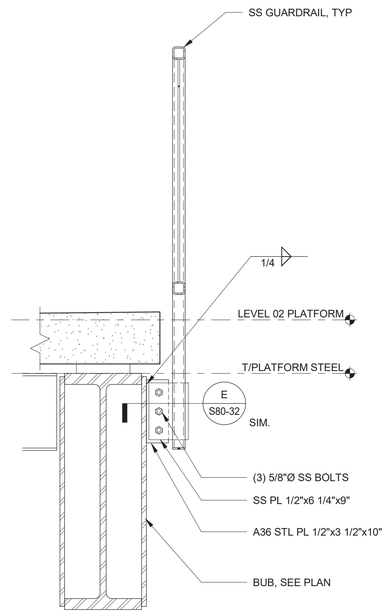

NOTES:
1. SEE DETAIL 1 THIS SHEET FOR BALANCE OF INFORMATION.

2 TYPICAL SECTION AT BUB
1" = 1'-0"

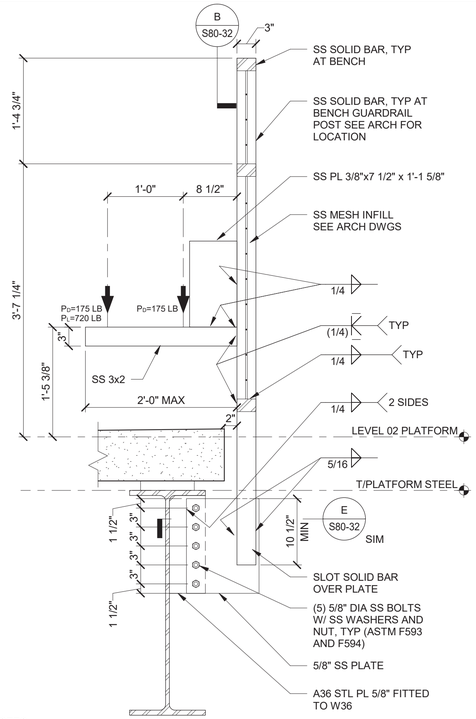

NOTES:
1. SEE ARCH. DWGS FOR ADD'L INFO ON BENCH ASSEMBLY.
2. BENCH DESIGN IS A DELEGATED DESIGN TO THE GC.
3. P_D = DEAD LOAD + P_L = LIVE LOAD USED FOR BASIS OF BENCH SUPPORT DESIGN; GC TO SUBMIT SUPERIMPOSED LOADS WITH BENCH SHOP DRAWINGS FOR REVIEW AND APPROVAL.
4. COORDINATE BENCH SUPPORT DETAILING WITH BENCH SHOP DRAWINGS.

3 TYPICAL SECTION AT BENCH
1" = 1'-0"

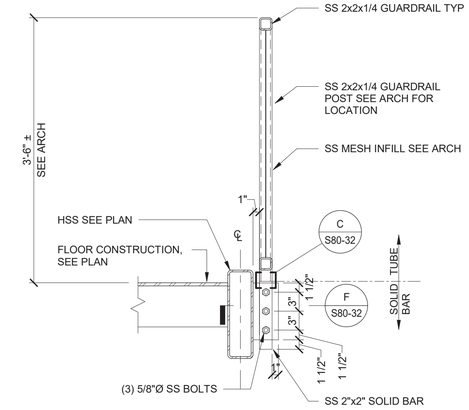

4 TYPICAL SECTION AT PLATFORM STAIR
1" = 1'-0"

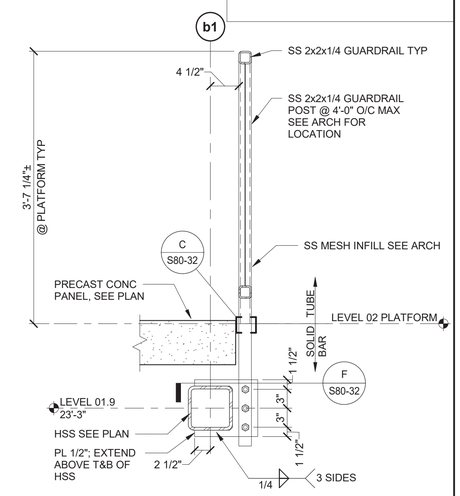

5 TYPICAL SECTION AT HSS
1" = 1'-0"

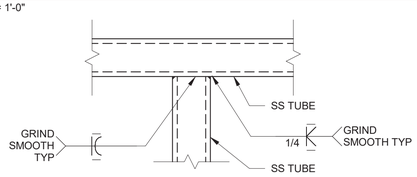

A DETAIL AT TUBE
3" = 1'-0"

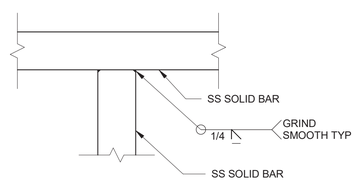

B DETAIL AT SOLID BAR
3" = 1'-0"

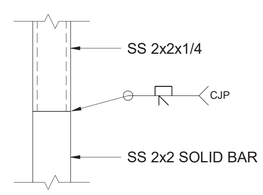

C DETAIL AT TUBE-TO-BAR
3" = 1'-0"

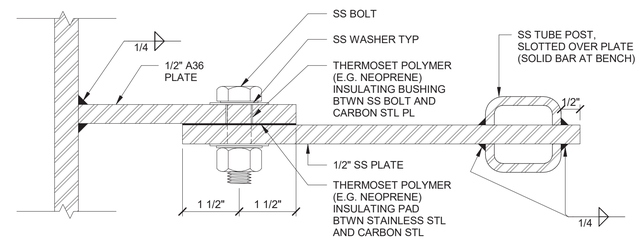

E DETAIL AT GUARDRAIL CONNECTION
6" = 1'-0"

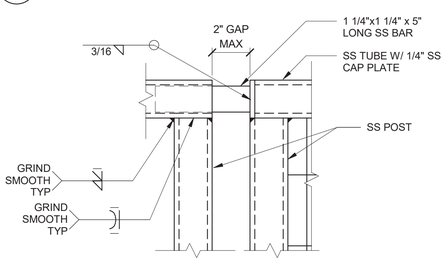

D DETAIL AT EXPANSION JOINT
3" = 1'-0"

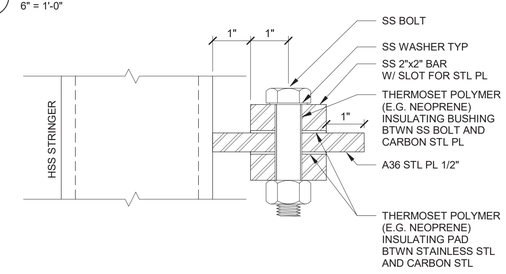

F GUARDRAIL - DETAIL - BOLTS AT BAR
6" = 1'-0"

DESIGN BY:									
DRAWN BY:									
CHECKED BY:									
APPROVED BY:			01/27/2020	ISSUE FOR BID	EJT	HMM	TRM		
CDOT/APPROVED BY:		NO.	DATE	REVISIONS	DES.	DRW.	CHK.	DCCO	CDOT

SIMPSON GUMPERTZ & HEGER
Engineering of Structures and Building Enclosures
Simpson Gumpertz & Heger Inc.
135 South LaSalle Street, Suite 3800
Chicago, Illinois 60603
main: 312.754.7500 fax: 312.754.7501
www.sgh.com

PERKINS+WILL
The Wrigley Building
410 North Michigan Ave.
Suite 1600
Chicago, IL 60611
t 312.755.0770
f 312.755.0775
www.perkinswill.com

CDOT
CHICAGO DEPARTMENT OF TRANSPORTATION
DIVISION OF ENGINEERING

154 N DAMEN AVE - DAMEN GREEN LINE STATION

GUARDRAIL CONNECTION SECTIONS AND DETAILS

CDOT PROJECT D-7-135 | DATE: 01/27/2020

SPEC. NO.

DRAWING NO. **S80-32**

REVISION NO.

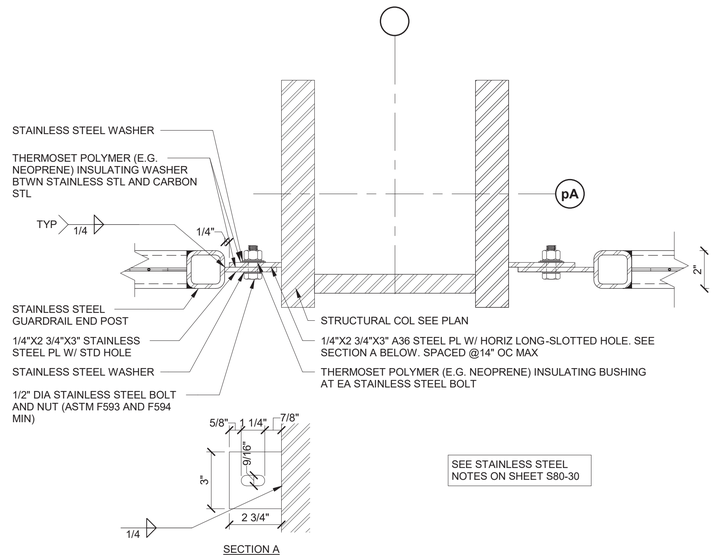

1 PLAN DETAIL AT TYPICAL GUARDRAIL TO CANOPY COLUMN

3" = 1'-0"

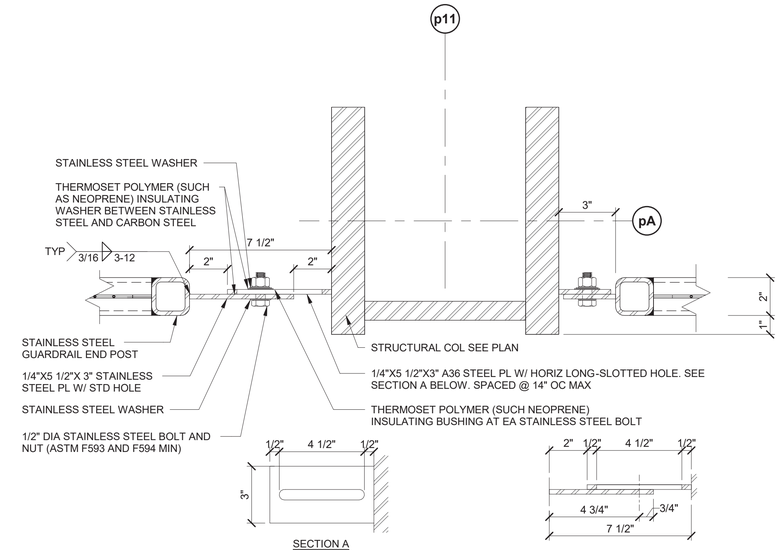

2 PLAN DETAIL AT GUARDRAIL TO CANOPY COLUMN AT EXPANSION JOINT

3" = 1'-0"

DESIGN BY:									
DRAWN BY:									
CHECKED BY:									
APPROVED BY:			01/27/2020	ISSUE FOR BID	EJT	HMM	TRM		
CDOT/APPROVED BY:		NO.	DATE	REVISIONS	DES.	DRW.	CHK.	DCCO	CDOT

SIMPSON GUMPERTZ & HEGER
Engineering of Structures and Building Enclosures
Simpson Gumpertz & Heger Inc.
135 South LaSalle Street, Suite 3800
Chicago, Illinois 60603
main: 312.754.7500 fax: 312.754.7501
www.sgh.com

PERKINS+WILL
The Wrigley Building
410 North Michigan Ave.
Suite 1600
Chicago, IL 60611
t 312.755.0770
f 312.755.0775
www.perkinswill.com

CDOT
CHICAGO DEPARTMENT OF TRANSPORTATION
DIVISION OF ENGINEERING

154 N DAMEN AVE - DAMEN GREEN LINE STATION

GUARDRAIL CONNECTION SECTIONS AND DETAILS

CDOT PROJECT D-7-135 | DATE: 01/27/2020

SPEC. NO.

DRAWING NO. **S80-33**

REVISION NO.

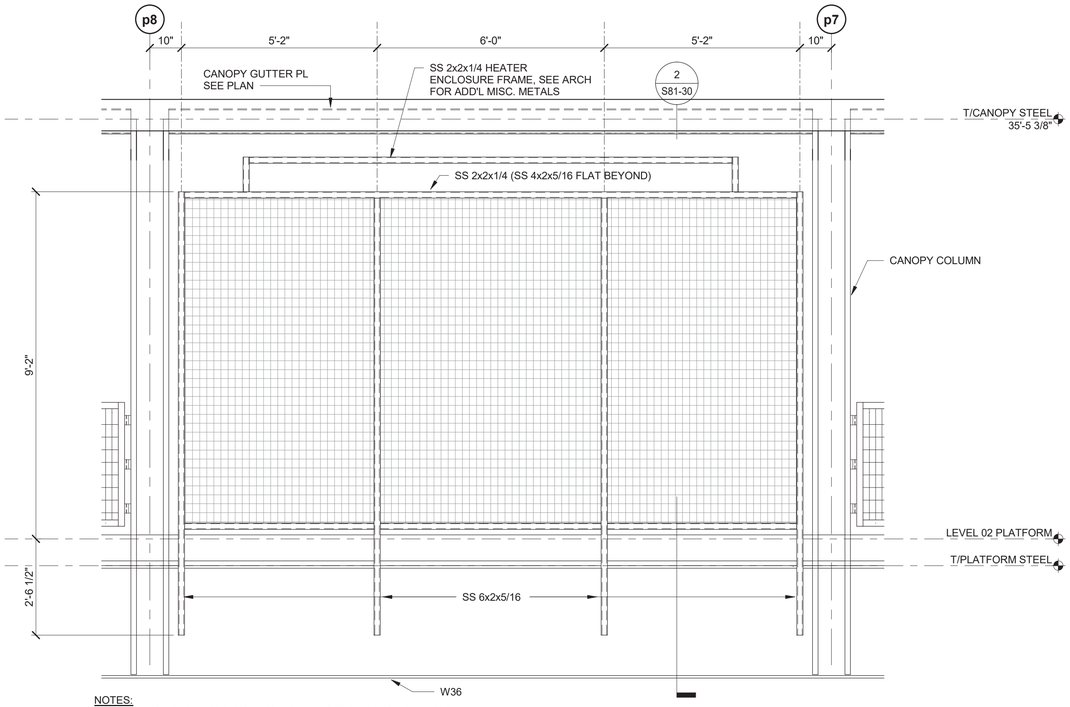

NOTES:
1. SEE ARCH DWGS FOR LOCATION OF WINDSCREENS ON PLATFORM LEVEL.
2. SEE ARCH DWGS FOR ADDITIONAL DETAILS.

1 WINDSCREEN ELEVATION
1/2" = 1'-0"

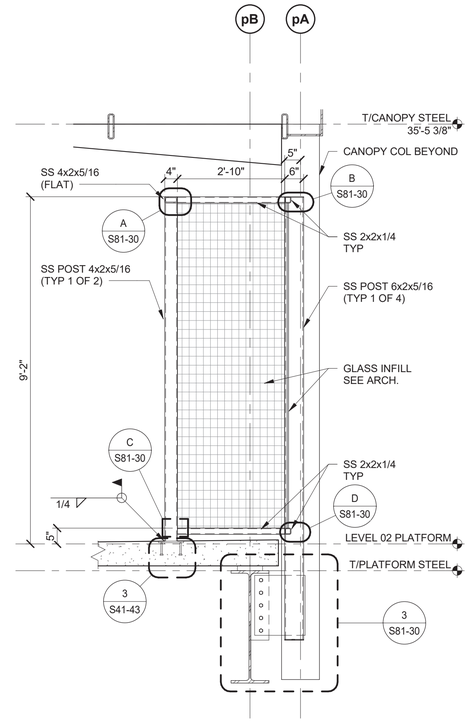

2 TYPICAL WINDSCREEN SECTION
1/2" = 1'-0"

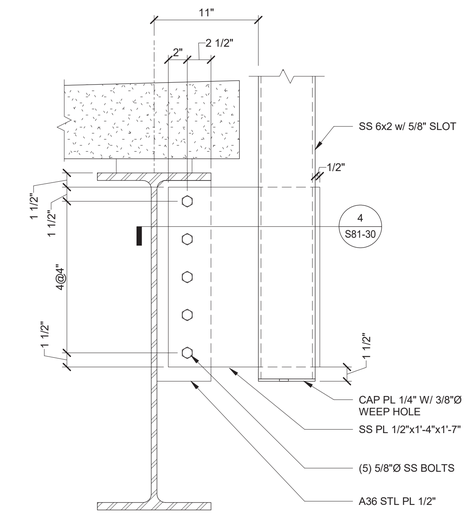

3 WINDSCREEN - DETAIL - POST TO W36
1 1/2" = 1'-0"

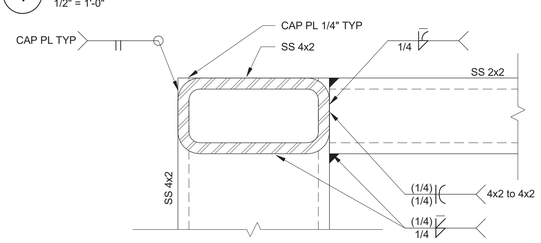

A TUBE-TO-TUBE CONNECTION
6" = 1'-0"

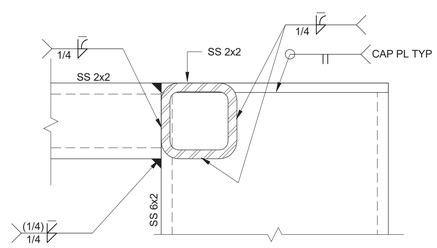

B TUBE-TO-TUBE CONNECTION
6" = 1'-0"

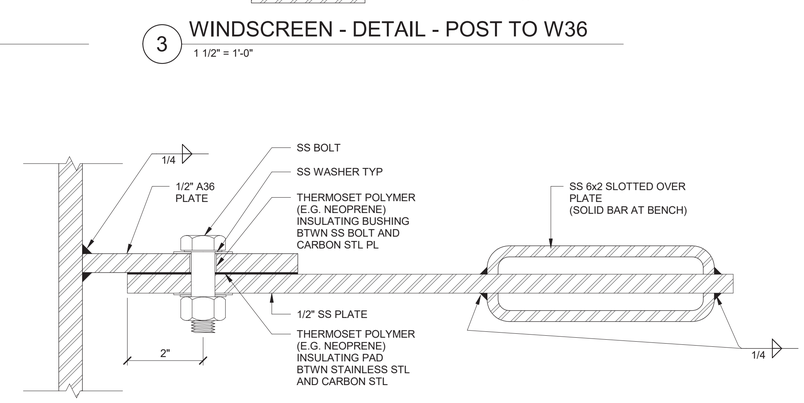

4 WINDSCREEN - DETAIL - CONNECTION PLAN
6" = 1'-0"

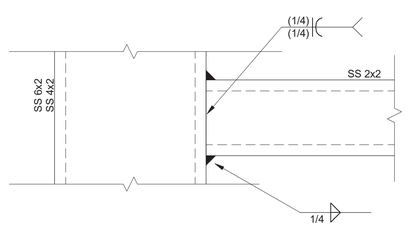

C TUBE-TO-TUBE CONNECTION
6" = 1'-0"

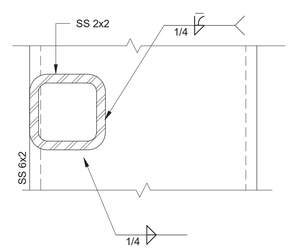

D TUBE-TO-TUBE CONNECTION
6" = 1'-0"

DESIGN BY:									
DRAWN BY:									
CHECKED BY:									
APPROVED BY:			01/27/2020	ISSUE FOR BID	EJT	HMM	TRM		
CDOT/APPROVED BY:		NO.	DATE	REVISIONS	DES.	DRW.	CHK.	DCCO	CDOT

SIMPSON GUMPERTZ & HEGER
Engineering of Structures and Building Enclosures
Simpson Gumpertz & Heger Inc.
135 South LaSalle Street, Suite 3800
Chicago, Illinois 60603
main: 312.754.7500 fax: 312.754.7501
www.sgh.com

PERKINS+WILL
The Wrigley Building
410 North Michigan Ave.
Suite 1600
Chicago, IL 60611
t 312.755.0770
f 312.755.0775
www.perkinswill.com

CDOT
CHICAGO DEPARTMENT OF TRANSPORTATION
DIVISION OF ENGINEERING

154 N DAMEN AVE - DAMEN GREEN LINE STATION

WINDSCREEN SECTION AND DETAILS

CDOT PROJECT D-7-135 | DATE: 01/27/2020

SPEC. NO.

DRAWING NO. **S81-30**

REVISION NO.

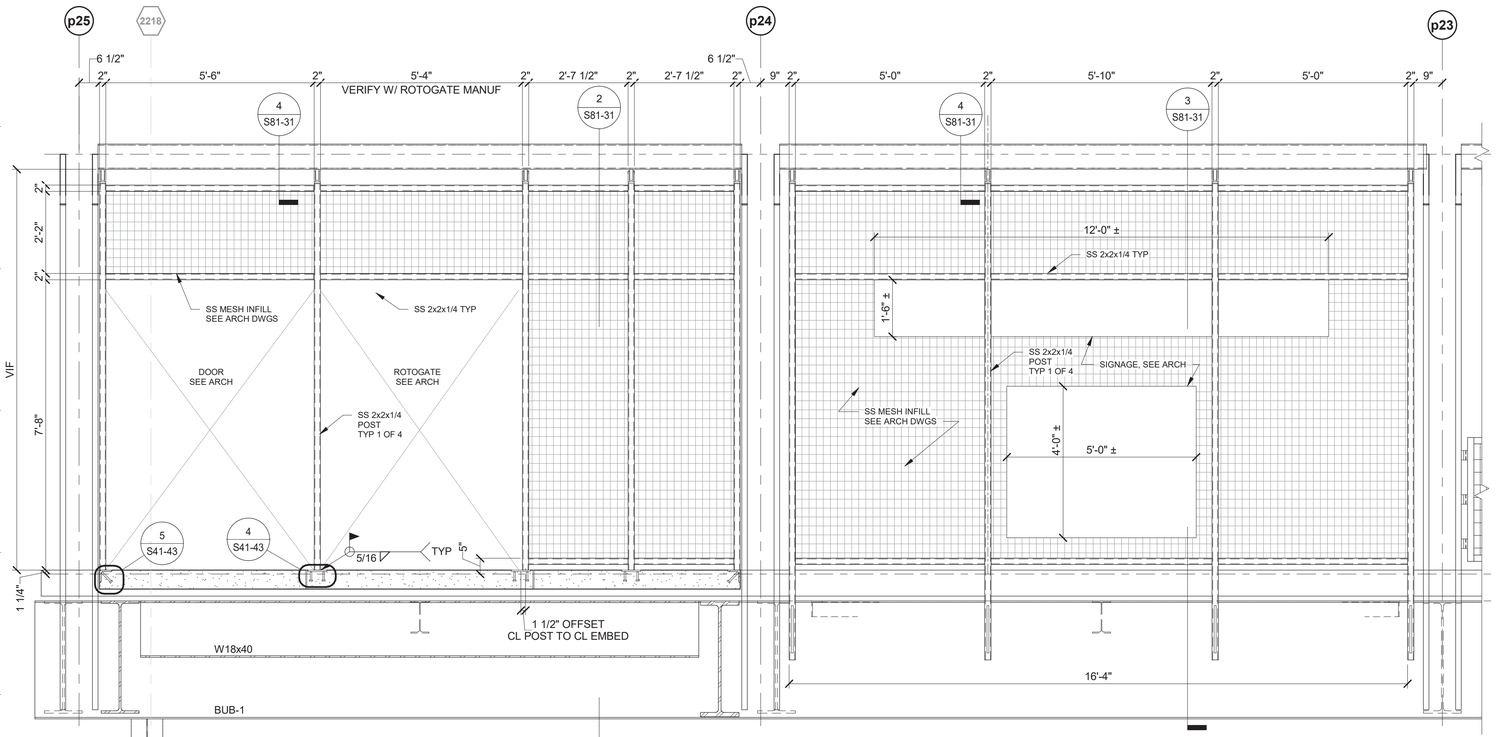

NOTES:
1. FIELD VERIFY PROJECT CONDITIONS PRIOR TO FABRICATION OF ENTRY BARRIER COMPONENTS.
2. SEE ARCH DWGS FOR DIMENSIONS, ELEVATIONS, AND OTHER INFORMATION NOT SHOWN.
3. BARRIER MEMBERS AND CONNECTIONS DESIGNED FOR WIND LOAD ON SOLID PROJECTED AREA AS SHOWN ON ARCH DWGS.

1 ENTRY BARRIER - ELEVATION
1/2" = 1'-0"

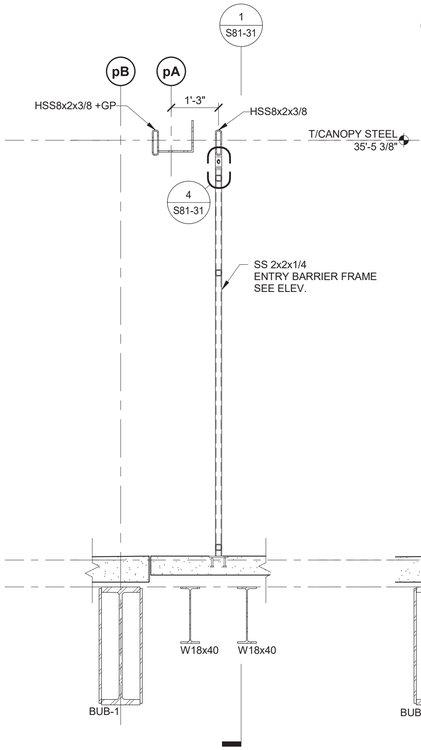

2 SECTION
1/2" = 1'-0"

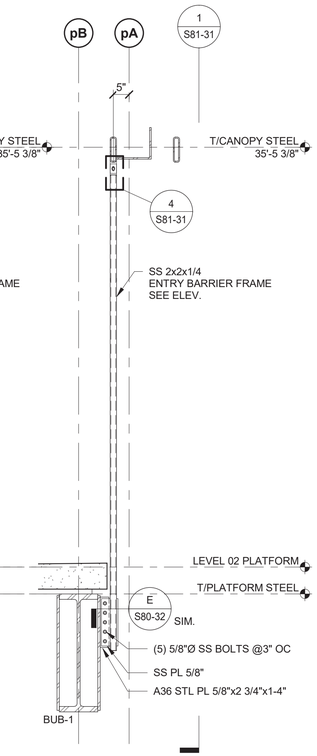

3 SECTION
1/2" = 1'-0"

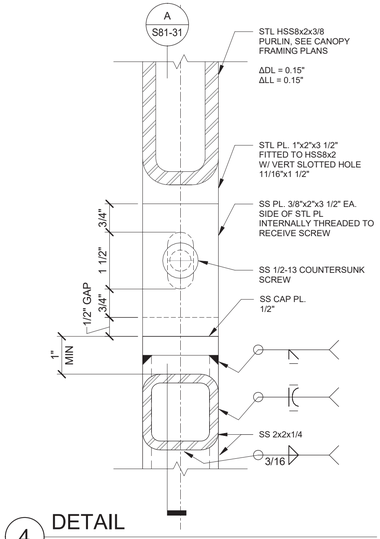

4 DETAIL
6" = 1'-0"

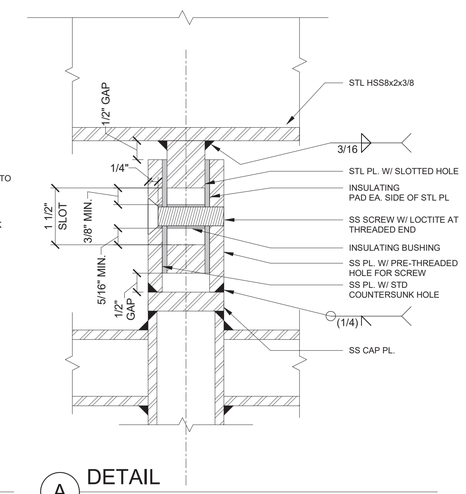

A DETAIL
6" = 1'-0"

DESIGN BY:									
DRAWN BY:									
CHECKED BY:									
APPROVED BY:			01/27/2020	ISSUE FOR BID	EJT	HMM	TRM		
CDOT/APPROVED BY:		NO.	DATE	REVISIONS	DES.	DRW.	CHK.	DCCO	CDOT

SIMPSON GUMPERTZ & HEGER
Engineering of Structures and Building Enclosures
Simpson Gumpertz & Heger Inc.
135 South LaSalle Street, Suite 3800
Chicago, Illinois 60603
main: 312.754.7500 fax: 312.754.7501
www.sgh.com

PERKINS+WILL
The Wrigley Building
410 North Michigan Ave.
Suite 1600
Chicago, IL 60611
t 312.755.0770
f 312.755.0775
www.perkinswill.com

CDOT
CHICAGO DEPARTMENT OF TRANSPORTATION
DIVISION OF ENGINEERING

154 N DAMEN AVE - DAMEN GREEN LINE STATION

ENTRY BARRIER SECTION AND DETAILS

CDOT PROJECT D-7-135 | DATE: 01/27/2020

SPEC. NO.

DRAWING NO. S81-31

REVISION NO.

STRUCTURAL DEMOLITION AND SUGGESTED STRUCTURAL TEMPORARY SHORING NOTES:

GENERAL

1. The intent of the structural demolition and suggested shoring (SD) drawings is to cover the scope of major structural items t o be demolished, and provide suggested phasing and shoring design for pricing purposes only.
2. The Contractor is fully responsible for the means and methods of shoring and demolition, and the integrity and stability of t he existing structure during demolition until the work is completed. Design, furnish, and install shoring in required locations where existing construction to remain will be affected by the demolition.
3. Existing construction shown for reference only and shall be field verified prior to the demolition work. dimensions and eleva tions noted as (+/-) and field conditions shall be verified in the field (VIF) by the contractor prior to the shoring and demolition work. Field survey shall utilize test pits as necessary to determine the vertical and horizontal dimensional locations of all potentially affected utilities.
4. Following the Contractor's survey, existing elements that conflict with new construction shall be documented and submitted to the Comissioner indicating the proposed element to be demolished for approval prior to shoring and demolition.
5. Contractor shall investigate the existence of vaulted sidewalks. Equipment shall not be driven over any sidewalk without an e valuation by a licensed Structural Engineer in the State of Illinois.
6. The Contractor shall use these drawings in conjunction with the survey drawings, existing CTA drawings, and the Architectural , MEP, and Civil demolition and phasing drawings. In the event of conflicting information, notify the Commissioner.
7. The Contractor shall familiarize itself with all existing strucures, sewer locations, and other utilities, site conditions, e xisting building drawings, surveys, and reports.
8. Contractor shall submit temporary shoring/demolition schedule, sequence, and earth retention and shoring engineering calculat ions to the Commissioner for review prior to the start of construction. Engineering shall be completed by a licensed structural engineer in the State of Illinois .
9. All work must comply with the CTA Adjacent Construction Manual. The contractor is responsible for monitoring adjacent buildin gs and the CTA structure for damage and movement throughout construction.
10. The demolition and suggested shoring sheets primarily deal with track structure shoring and do not cover all the shoring the contractor will need to provide. Additional shoring will be required for bridge and station construction.

SHORING

1. The suggested phasing, earth retention, and shoring design is provided for pricing purposes only. The Contractor is responsib le for final phasing, earth retention, and shoring design. The earth retention and shoring will be designed by a licensed structural engineer in the State of Illinois. Earth retention system to account for superimposed loading from the track structure shoring, if applicable.
2. The suggested shoring design for the existing bent girders is similar to the design used for the Lake Street Improvement proj ect (CDOT Project No. B-4-118). CDOT retained ownership of the shoring tower material. See Letter #047 prepared by Capitol Cement Company, Inc. and dated 18 Decem ber 2018 for additional information on the shoring inventory, location of the inventory, and information on material that was not retained (e.g. hydraulic jacks) .
3. The shoring tower is a CDOT-provided material for the project. Contractor shall provide pricing for general use of the CDOT -provided shoring towers. Pricing shall also include additional material and labor costs to account for variations between the Damen Green Line Station design shown within these drawings, and the Lake Street Improvement design shown in Shoring Shop Drawings, Submittal No. 071-01-02 prepared by Capitol Cement Company, Inc. and dated 15 June 2018 (CTA Submittal #21).
4. See Field Observation of Temporary Shoring Tower letter, prepared by Simpson Gumpertz & Heger Inc., and dated 29 November 201 8. Contractor shall compare condition of the shoring towers to the information provided in the letter, provide a Condition Assessment submittal, and noti fy the Commissioner of any discrepancies. Contractor is solely responsible for repairing or reinforcing any discrepency found.
5. Shoring tower shall be evaluated, and reinforced (if necessary) for the superimposed loads provided on the drawings.
6. Shoring plans provide dimensional constraints for shoring tower location with respect to new column and pile cap construction and existing below-grade utilities. Variations from the dimensional constraints will require an evaluation from a licensed structural engineer in the State of Il linois.
7. Before construction commences, a professional surveyor must check and record the elevation and location of each existing bent .
8. Provide shoring towers at each end of the existing bent girder prior to demolition.
9. Lake Street shall be closed and temporary shoring and temporary concrete barriers shall be completely in place prior to any d emolition including bolt/rivet removal.
10. Temporary sheeting designed and installed by the Contractor will be used during utility and foundation work as necessary to e nsure the safety of workers, the public, and the stability of the excavation.
11. Temporary shoring of existing bent girders shall be removed after all new steel columns, including bracing, is erected.
12. Earth retaining systems shall be designed to account for shoring tower loads imposed on grade.

DEMOLITION

1. The 'S' drawings cover limited select demolition where noted (i.e. existing rivet removal and replacement).
2. Contractor shall verify with CTA that the most current documents are available for review of the existing structure to be dem olished. See reference documents in the 's' drawings for additional information.
3. Prior to the start of the demolition work, verify that the scope of demolition indicated on the drawings will not damage, cut , or distrupt service of mechanical systems, electrical systems, and/or utilities embedded in the existing structure.
4. Use qualified, experienced personnel for demolition and removal operations. Demolition and removal operations shall be perfo rmed in a careful and orderly manner to prevent hazards to persons, damage to property, and the spreading of dust and debris.
5. Demolish existing structure using plasma cutting or other approved method. Use of an acetylene torch (flame cutting) is proh ibited.
6. Do not remove more of the existing structure than indicated on these drawings. Do not damage, mar, or cut the structure indic ated to remain or materials to be reused.
7. Bid shall include removing demolished materials from the site in accordance with all applicable laws, codes, and regulations.

MONITORING

1. At a minimum, columns within 25 ft of trenching or excavation operations must be surveyed for movement daily while trenches o r areas of excavation are open, weekly throughout construction, and at the conclusion of construction until it is determined that movement is within allowabl e criteria approved by the Commissioner.
2. Buildings and building foundations within 25 ft of trenching or excavation operations must be surveyed for movement daily whi le trenches or areas of excavation are open. Once trenching or excavation within 25 ft of a building or building foundation is backfilled, buildings and building fo undations must be surveyed at least weekly for at least 2 weeks or until it is determined that movement is within allowable criteria approved by the Commissioner.
3. A final survey of all buildings and building foundations must be conducted at the conclusion of construction. if any utilitie s are uncovered within an area of excavation, the surveyor must check and record their location and elevation. The location and elevation of the utility must be checked da ily while exposed. The Commissioner may direct the surveyor to check additional columns, buildings, building foundations, or utilities in areas of concern within the project limits at any time. Any settlement or deflection of any structure, column, building foundation, temporary shoring, or utility must be immediately brought to the attention of the Commissioner, and all work in the area must cease until a plan is approved by the Commissioner addressing the issue. This work will be paid separately, but will be considered included in the cost of the contract.

SPECIFICAITONS

1. See the following specification sections for additional information:
   - A. 02 16 10 Monitoring Adajacent Structure During Construction
   - B. 02 41 16 Structure Demolition
   - C. 02 41 19 Selective Structural Demolition
   - D. 31 09 13 Monitoring Track Structures During Construction
   - E. 31 15 00 Structural Shoring
   - F. 31 20 00 Earthwork
   - G. 31 50 00 Excavation Support and Protection

DESIGN BY:									
DRAWN BY:									
CHECKED BY:									
APPROVED BY:			01/27/2020	ISSUE FOR BID	CJB	MW	TRM		
CDOT/APPROVED BY:		NO.	DATE	REVISIONS	DES.	DRW.	CHK.	DCCO	CDOT

SIMPSON GUMPERTZ & HEGER
Engineering of Structures and Building Enclosures
Simpson Gumpertz & Heger Inc.
135 South LaSalle Street, Suite 3800
Chicago, Illinois 60603
main: 312.754.7500 fax: 312.754.7501
www.sgh.com

PERKINS+WILL
The Wrigley Building
410 North Michigan Ave.
Suite 1600
Chicago, IL 60611
t 312.755.0770
f 312.755.0775
www.perkinswill.com

CDOT
CHICAGO DEPARTMENT OF TRANSPORTATION
DIVISION OF ENGINEERING

154 N DAMEN AVE - DAMEN GREEN LINE STATION

STRUCTURAL DEMOLITION AND SUGGESTED SHORING NOTES

CDOT PROJECT D-7-135

DATE: 01/27/2020

SPEC. NO.

DRAWING NO. **SD00-00**

REVISION NO.

Recommended Installation Sequence

Note: Drawing is Best Viewed in Color

1	2	3	4	5	6

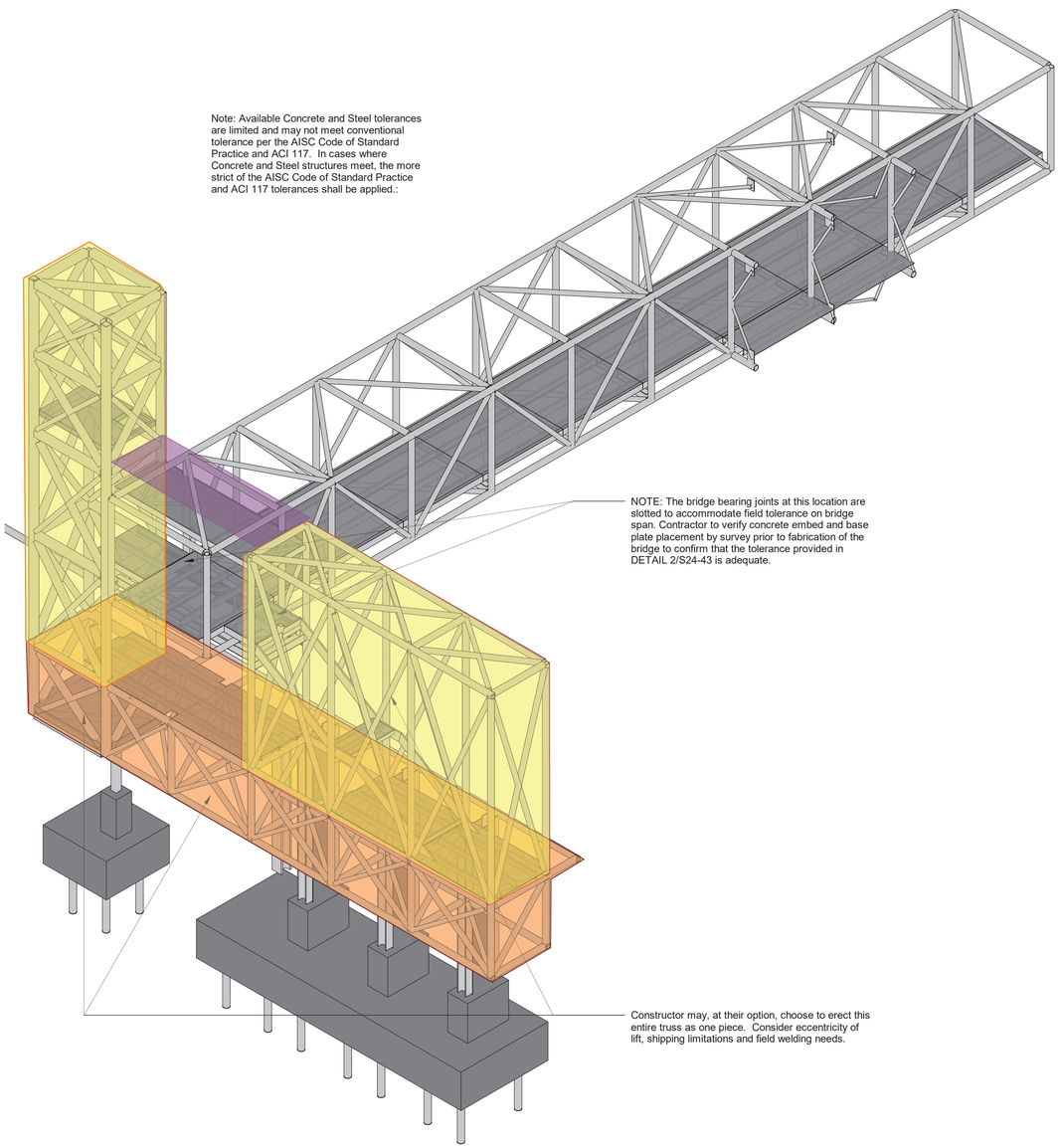

1 3D - PEDESTRIAN BRIDGE NORTH WEST PERSPECTIVE

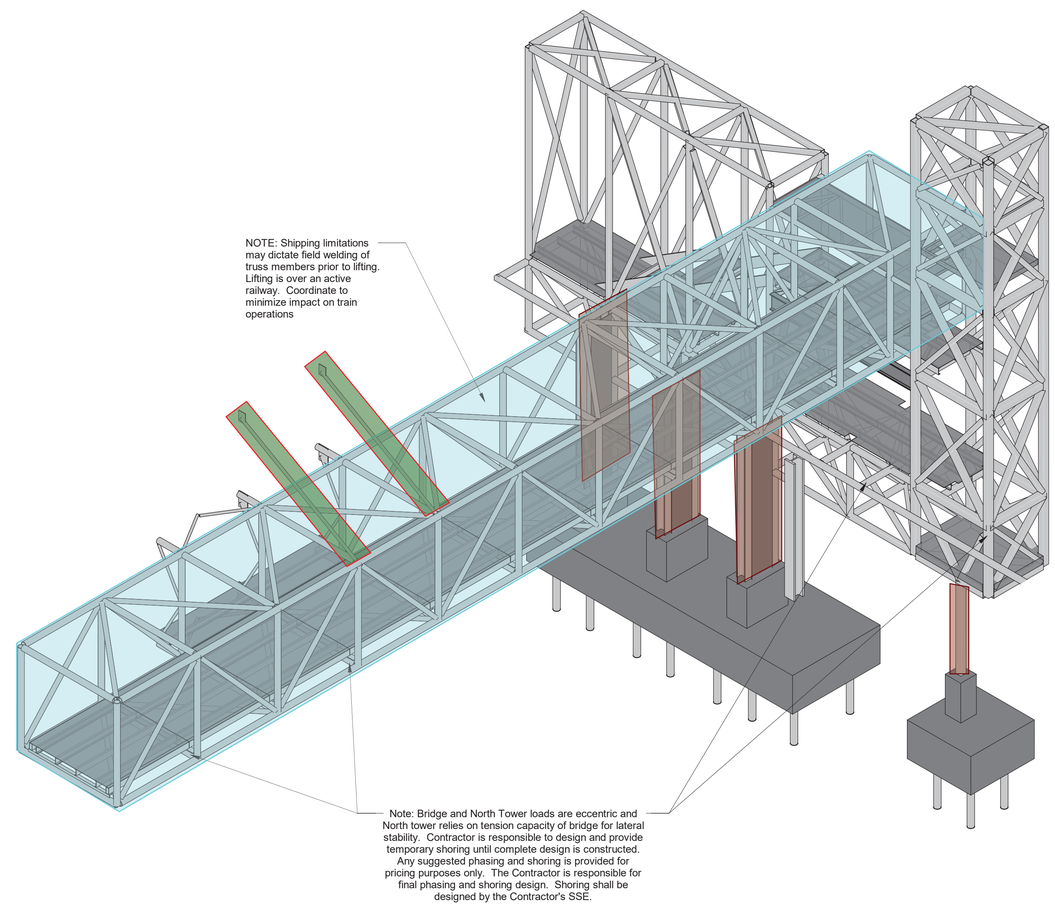

2 3D - PEDESTRIAN BRIDGE SOUTH EAST PERSPECTIVE

DESIGN BY:									
DRAWN BY:									
CHECKED BY:									
APPROVED BY:			01/27/2020	ISSUE FOR BID	EJT	HMM	TRM		
CDOT/APPROVED BY:		NO.	DATE	REVISIONS	DES.	DRW.	CHK.	DCCO	CDOT

SIMPSON GUMPERTZ & HEGER
Engineering of Structures and Building Enclosures
Simpson Gumpertz & Heger Inc.
135 South LaSalle Street, Suite 3800
Chicago, Illinois 60603
main: 312.754.7500 fax: 312.754.7501
www.sgh.com

PERKINS+WILL
The Wrigley Building
410 North Michigan Ave.
Suite 1600
Chicago, IL 60611
t 312.755.0770
f 312.755.0775
www.perkinswill.com

CDOT
CHICAGO DEPARTMENT OF TRANSPORTATION
DIVISION OF ENGINEERING

154 N DAMEN AVE - DAMEN GREEN LINE STATION

SUGGESTED BRIDGE ERECTION SEQUENCE

CDOT PROJECT D-7-135 | DATE: 01/27/2020

SPEC. NO.

DRAWING NO. **SD11-20**

REVISION NO.

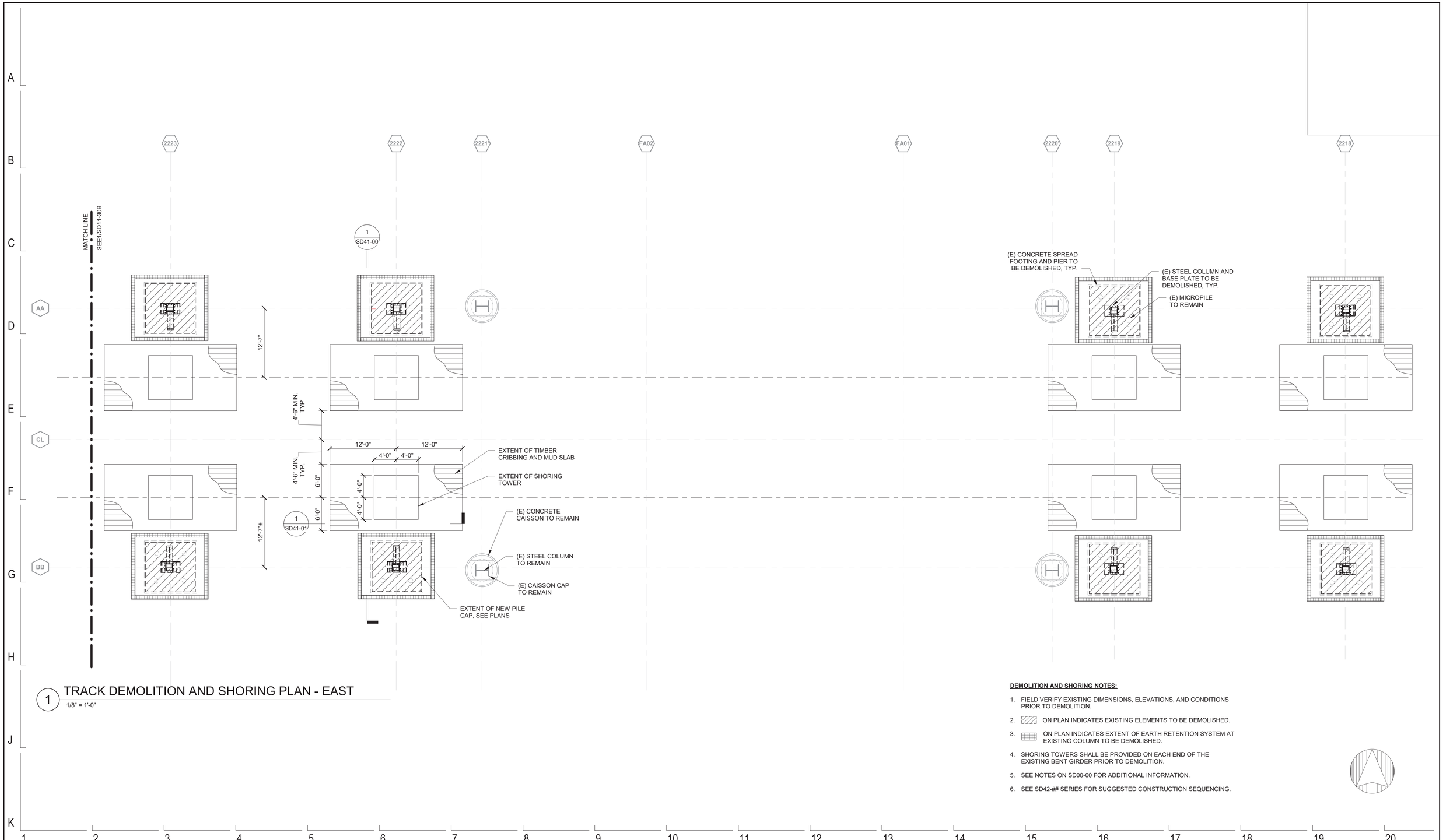

1 TRACK DEMOLITION AND SHORING PLAN - EAST

1/8" = 1'-0"

DEMOLITION AND SHORING NOTES:

1. FIELD VERIFY EXISTING DIMENSIONS, ELEVATIONS, AND CONDITIONS PRIOR TO DEMOLITION.
2. ON PLAN INDICATES EXISTING ELEMENTS TO BE DEMOLISHED.
3. ON PLAN INDICATES EXTENT OF EARTH RETENTION SYSTEM AT EXISTING COLUMN TO BE DEMOLISHED.
4. SHORING TOWERS SHALL BE PROVIDED ON EACH END OF THE EXISTING BENT GIRDER PRIOR TO DEMOLITION.
5. SEE NOTES ON SD00-00 FOR ADDITIONAL INFORMATION.
6. SEE SD42-## SERIES FOR SUGGESTED CONSTRUCTION SEQUENCING.

DESIGN BY:									
DRAWN BY:									
CHECKED BY:									
APPROVED BY:			01/27/2020	ISSUE FOR BID	CJB	MW	TRM		
CDOT/APPROVED BY:		NO.	DATE	REVISIONS	DES.	DRW.	CHK.	DCCO	CDOT

SIMPSON GUMPERTZ & HEGER
Engineering of Structures and Building Enclosures
Simpson Gumpertz & Heger Inc.
135 South LaSalle Street, Suite 3800
Chicago, Illinois 60603
main: 312.754.7500 fax: 312.754.7501
www.sgh.com

PERKINS+WILL
The Wrigley Building
410 North Michigan Ave.
Suite 1600
Chicago, IL 60611
t 312.755.0770
f 312.755.0775
www.perkinswill.com

CDOT
CHICAGO DEPARTMENT OF TRANSPORTATION
DIVISION OF ENGINEERING

154 N DAMEN AVE - DAMEN GREEN LINE STATION

TRACK DEMOLITION AND SHORING PLAN - EAST

CDOT PROJECT D-7-135

DATE: 01/27/2020

SPEC. NO.

DRAWING NO. **SD11-30A**

REVISION NO.

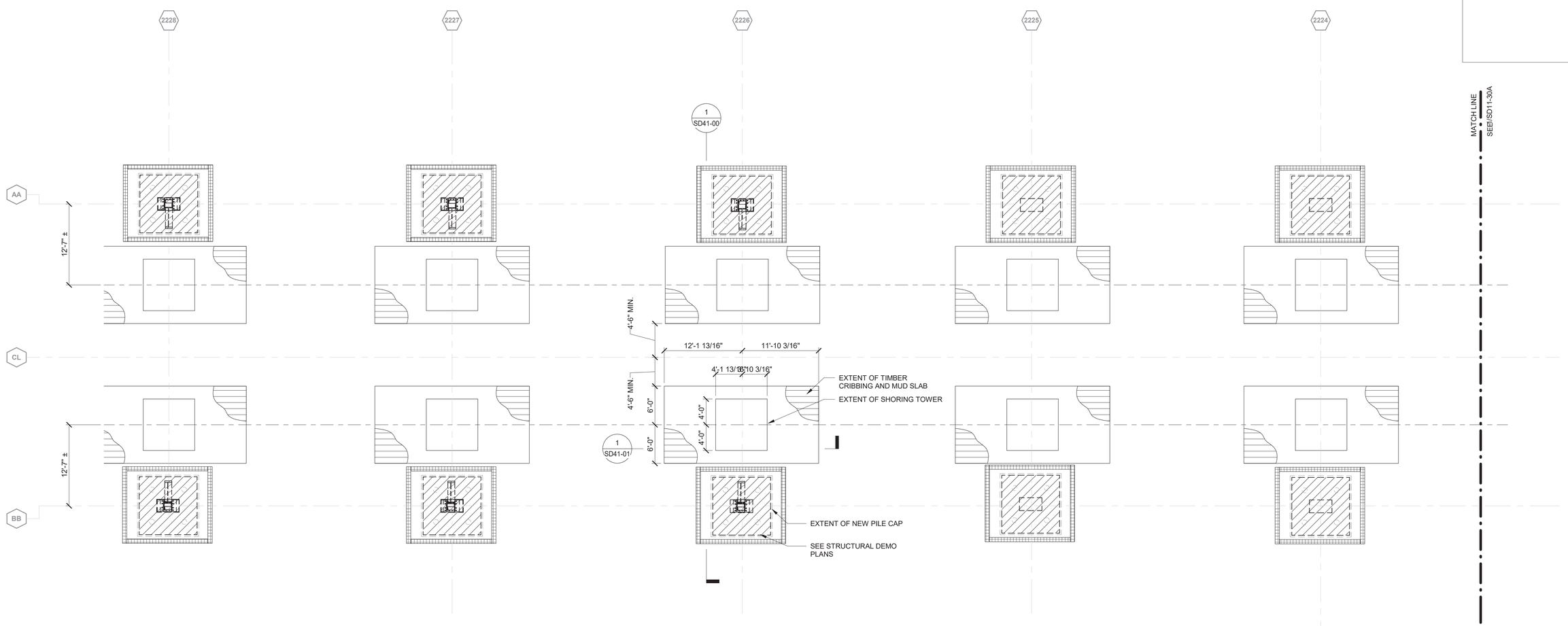

1 TRACK DEMOLITION AND SHORING PLAN - WEST

1/8" = 1'-0"

DEMOLITION AND SHORING NOTES:

1. FIELD VERIFY EXISTING DIMENSIONS, ELEVATIONS, AND CONDITIONS PRIOR TO DEMOLITION.
2. ON PLAN INDICATES EXISTING ELEMENTS TO BE DEMOLISHED.
3. ON PLAN INDICATES EXTENT OF EARTH RETENTION SYSTEM AT EXISTING COLUMN TO BE DEMOLISHED.
4. SHORING TOWERS SHALL BE PROVIDED ON EACH END OF THE EXISTING BENT GIRDER PRIOR TO DEMOLITION.
5. SEE NOTES ON SD00-00 FOR ADDITIONAL INFORMATION.
6. SEE SD42-## SERIES FOR SUGGESTED CONSTRUCTION SEQUENCING.

DESIGN BY:									
DRAWN BY:									
CHECKED BY:									
APPROVED BY:			01/27/2020	ISSUE FOR BID	CJB	MW	TRM		
CDOT/APPROVED BY:		NO.	DATE	REVISIONS	DES.	DRW.	CHK.	DCCO	CDOT

SIMPSON GUMPERTZ & HEGER
Engineering of Structures and Building Enclosures
Simpson Gumpertz & Heger Inc.
135 South LaSalle Street, Suite 3800
Chicago, Illinois 60603
main: 312.754.7500 fax: 312.754.7501
www.sgh.com

PERKINS+WILL
The Wrigley Building
410 North Michigan Ave.
Suite 1600
Chicago, IL 60611
t 312.755.0770
f 312.755.0775
www.perkinswill.com

CDOT
CHICAGO DEPARTMENT OF TRANSPORTATION
DIVISION OF ENGINEERING

154 N DAMEN AVE - DAMEN GREEN LINE STATION

TRACK DEMOLITION AND SHORING PLAN - WEST

CDOT PROJECT D-7-135 | DATE: 01/27/2020

SPEC. NO.

DRAWING NO. **SD11-30B**

REVISION NO.

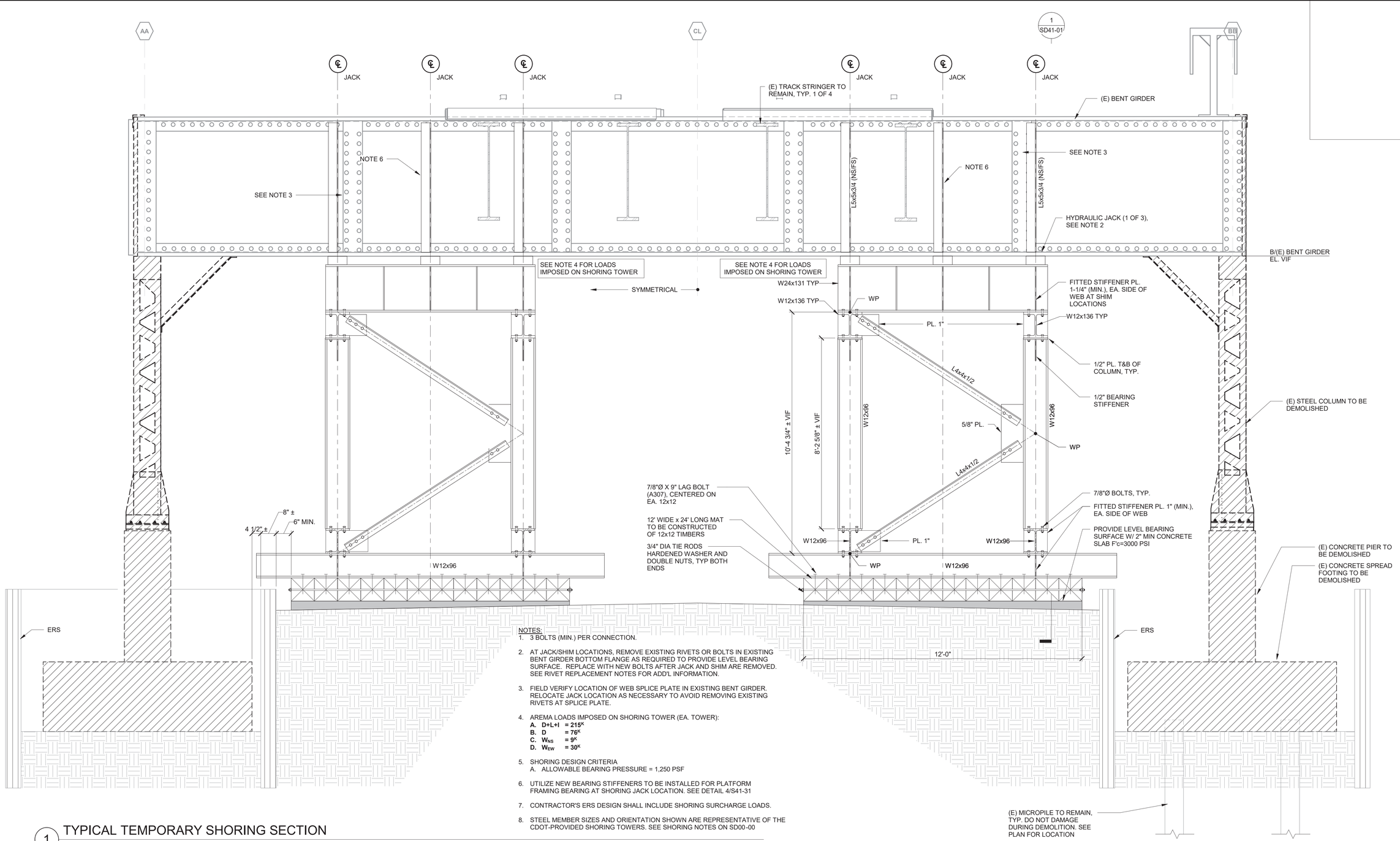

NOTES:

1. 3 BOLTS (MIN.) PER CONNECTION.
2. AT JACK/SHIM LOCATIONS, REMOVE EXISTING RIVETS OR BOLTS IN EXISTING BENT GIRDER BOTTOM FLANGE AS REQUIRED TO PROVIDE LEVEL BEARING SURFACE. REPLACE WITH NEW BOLTS AFTER JACK AND SHIM ARE REMOVED. SEE RIVET REPLACEMENT NOTES FOR ADD'L INFORMATION.
3. FIELD VERIFY LOCATION OF WEB SPLICE PLATE IN EXISTING BENT GIRDER. RELOCATE JACK LOCATION AS NECESSARY TO AVOID REMOVING EXISTING RIVETS AT SPLICE PLATE.
4. AREMA LOADS IMPOSED ON SHORING TOWER (EA. TOWER):
   A. D+L+I = 215^K
   B. D = 76^K
   C. W_{NS} = 9^K
   D. W_{EW} = 30^K
5. SHORING DESIGN CRITERIA
   A. ALLOWABLE BEARING PRESSURE = 1,250 PSF
6. UTILIZE NEW BEARING STIFFENERS TO BE INSTALLED FOR PLATFORM FRAMING BEARING AT SHORING JACK LOCATION. SEE DETAIL 4/S41-31
7. CONTRACTOR'S ERS DESIGN SHALL INCLUDE SHORING SURCHARGE LOADS.
8. STEEL MEMBER SIZES AND ORIENTATION SHOWN ARE REPRESENTATIVE OF THE CDOT-PROVIDED SHORING TOWERS. SEE SHORING NOTES ON SD00-00

1 TYPICAL TEMPORARY SHORING SECTION

1/2" = 1'-0"

DESIGN BY:									
DRAWN BY:									
CHECKED BY:									
APPROVED BY:			01/27/2020	ISSUE FOR BID	CJB	MW	TRM		
CDOT/APPROVED BY:		NO.	DATE	REVISIONS	DES.	DRW.	CHK.	DCCO	CDOT

SIMPSON GUMPERTZ & HEGER
Engineering of Structures and Building Enclosures
Simpson Gumpertz & Heger Inc.
135 South LaSalle Street, Suite 3800
Chicago, Illinois 60603
main: 312.754.7500 fax: 312.754.7501
www.sgh.com

PERKINS+WILL
The Wrigley Building
410 North Michigan Ave.
Suite 1600
Chicago, IL 60611
t 312.755.0770
f 312.755.0775
www.perkinswill.com

CDOT
CHICAGO DEPARTMENT OF TRANSPORTATION
DIVISION OF ENGINEERING

154 N DAMEN AVE - DAMEN GREEN LINE STATION

SHORING TOWER SECTIONS

CDOT PROJECT D-7-135 | DATE: 01/27/2020

SPEC. NO.

DRAWING NO. **SD41-00**

REVISION NO.

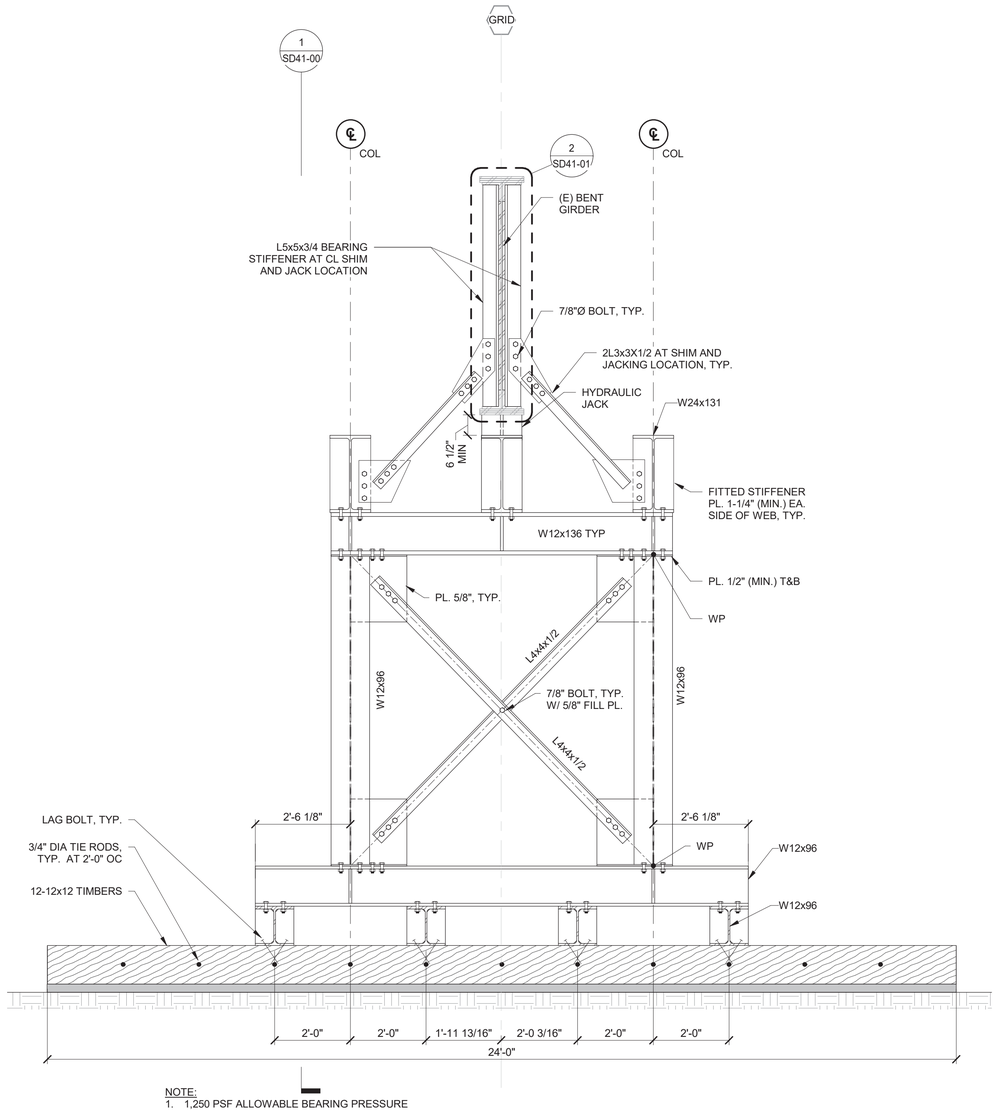

NOTE:
1. 1,250 PSF ALLOWABLE BEARING PRESSURE

1 TYPICAL SECTION SHOWING TEMPORARY SHORING

1/2" = 1'-0"

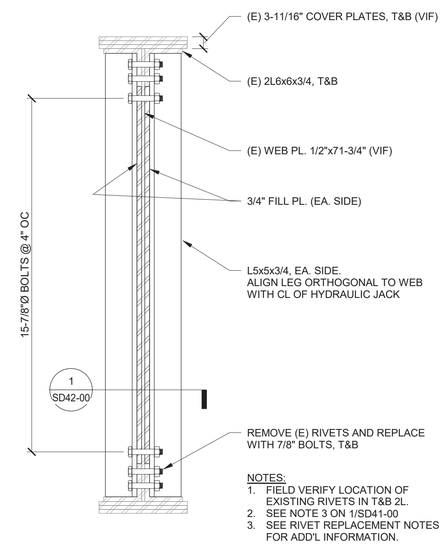

NOTES:
1. FIELD VERIFY LOCATION OF EXISTING RIVETS IN T&B 2L.
2. SEE NOTE 3 ON 1/SD41-00
3. SEE RIVET REPLACEMENT NOTES FOR ADD'L INFORMATION.

2 SHORING - STIFFENER DETAIL

1" = 1'-0"

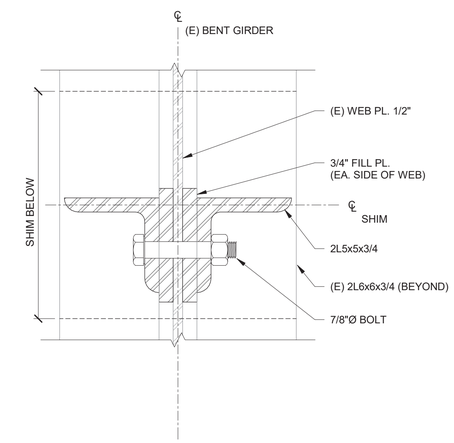

3 SHORING - JACK DETAIL

3" = 1'-0"

DESIGN BY:									
DRAWN BY:									
CHECKED BY:									
APPROVED BY:			01/27/2020	ISSUE FOR BID	EJT	HMM	TRM		
CDOT/APPROVED BY:		NO.	DATE	REVISIONS	DES.	DRW.	CHK.	DCCO	CDOT

SIMPSON GUMPERTZ & HEGER
Engineering of Structures and Building Enclosures
Simpson Gumpertz & Heger Inc.
135 South LaSalle Street, Suite 3800
Chicago, Illinois 60603
main: 312.754.7500 fax: 312.754.7501
www.sgh.com

PERKINS+WILL
The Wrigley Building
410 North Michigan Ave.
Suite 1600
Chicago, IL 60611
t 312.755.0770
f 312.755.0775
www.perkinswill.com

CDOT
CHICAGO DEPARTMENT OF TRANSPORTATION
DIVISION OF ENGINEERING

154 N DAMEN AVE - DAMEN GREEN LINE STATION

SHORING TOWER SECTIONS

CDOT PROJECT D-7-135

DATE: 01/27/2020

SPEC. NO.

DRAWING NO. SD41-01

REVISION NO.

SEQUENCE NOTES:

1. SEQUENCE DETAILS HEREIN ARE CONCEPTUAL. FINAL DESIGN OF TEMPORARY SHORING AND EARTH RETENTION SYSTEMS (ERS), AND SEQUENCING SHALL BE PERFORMED BY A LICENSED STRUCTURAL ENGINEER IN THE STATE OF ILLINOIS UNDER THE DIRECTION OF THE CONTRACTOR.
2. EL. +xx.x' INDICATES ELEVATION WITH RESPECT TO CHICAGO CITY DATUM (CCD).
3. DIMENSIONS NOTED AS ± SHALL BE FIELD VERIFIED BY THE CONTRACTOR PRIOR TO THE WORK.
4. STREET, CURB, AND SIDEWALK ELEVATIONS SHOWN ARE AT STATION 34 AS SHOWN ON SHEET C-3 IN THE LAKE STREET IMPROVEMENT DRAWINGS PREPARED BY TRANSYSTEMS. SIMILAR CONDITIONS APPLY AT OTHER BENT COLUMN REPLACEMENT LOCATIONS.
5. ESTABLISH BENCHMARK PLAN LOCATION AND ELEVATION FOR EXISTING BENT GIRDER PRIOR TO LOAD TRANSFER TO SHORING FOR CONSTRUCTION MONITORING.
6. SEQUENCING SHOWN IS SYMMETRICAL ABOUT CENTERLINE OF EXISTING TRACK. COLUMN REPLACEMENT SHALL OCCUR SIMULTANEOUSLY AT NORTH/SOUTH ENDS OF EXISTING BENT GIRDERS.

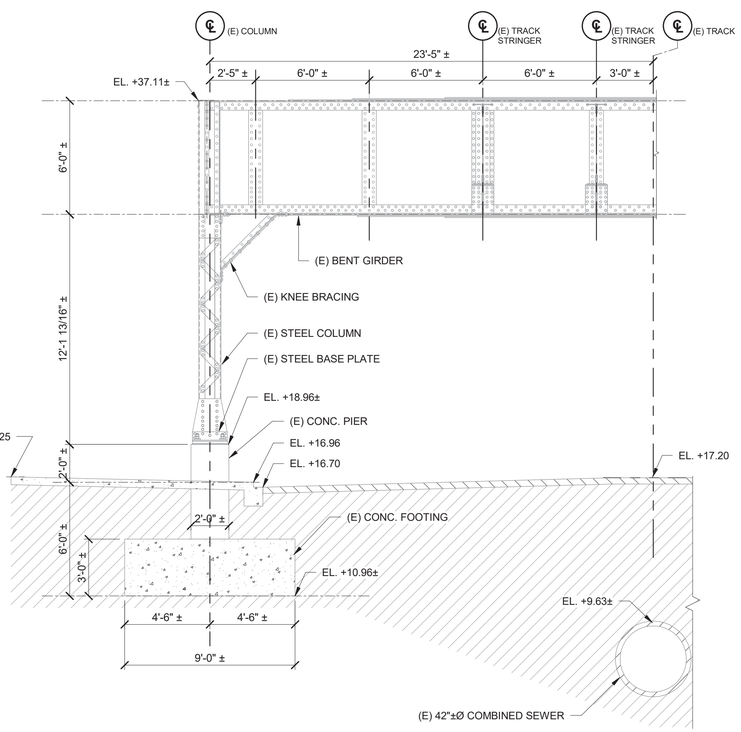

EXISTING CONDITIONS - STATION 34

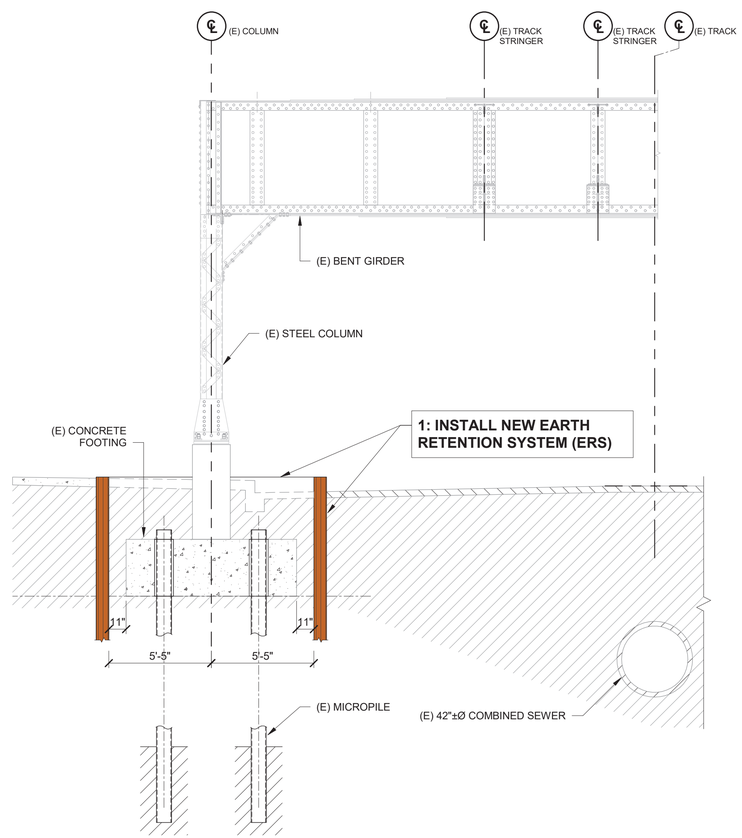

1 PHASE 1

1/4" = 1'-0"

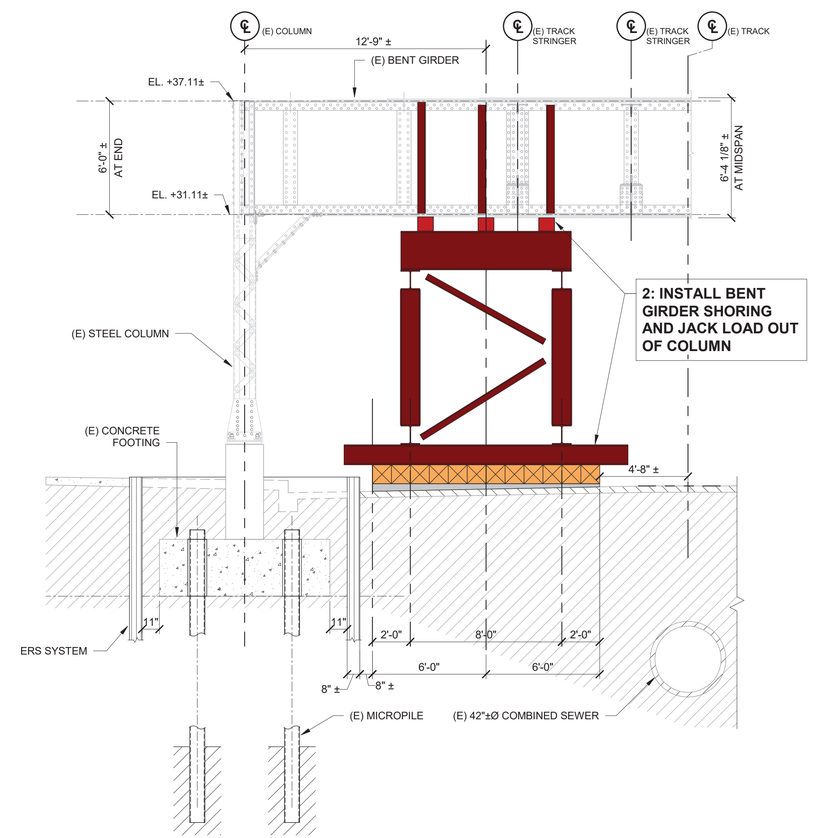

2 PHASE 2

1/4" = 1'-0"

SHEET BEST VIEWED IN COLOR

DESIGN BY:									
DRAWN BY:									
CHECKED BY:									
APPROVED BY:			01/27/2020	ISSUE FOR BID	EJT	HMM	TRM		
CDOT/APPROVED BY:		NO.	DATE	REVISIONS	DES.	DRW.	CHK.	DCCO	CDOT

SIMPSON GUMPERTZ & HEGER
Engineering of Structures and Building Enclosures
Simpson Gumpertz & Heger Inc.
135 South LaSalle Street, Suite 3800
Chicago, Illinois 60603
main: 312.754.7500 fax: 312.754.7501
www.sgh.com

PERKINS+WILL
The Wrigley Building
410 North Michigan Ave.
Suite 1600
Chicago, IL 60611
t 312.755.0770
f 312.755.0775
www.perkinswill.com

CDOT
CHICAGO DEPARTMENT OF TRANSPORTATION
DIVISION OF ENGINEERING

154 N DAMEN AVE - DAMEN GREEN LINE STATION

SUGGESTED CONSTRUCTION SEQUENCE

CDOT PROJECT D-7-135 | DATE: 01/27/2020

SPEC. NO.

DRAWING NO. SD42-00

REVISION NO.

SEQUENCE NOTES:

1. SEQUENCE DETAILS HEREIN ARE CONCEPTUAL. FINAL DESIGN OF TEMPORARY SHORING AND EARTH RETENTION SYSTEMS (ERS), AND SEQUENCING SHALL BE PERFORMED BY A LICENSED STRUCTURAL ENGINEER IN THE STATE OF ILLINOIS UNDER THE DIRECTION OF THE CONTRACTOR.
2. EL. +xx.x' INDICATES ELEVATION WITH RESPECT TO CHICAGO CITY DATUM (CCD).
3. DIMENSIONS NOTED AS ± SHALL BE FIELD VERIFIED BY THE CONTRACTOR PRIOR TO THE WORK.
4. STREET, CURB, AND SIDEWALK ELEVATIONS SHOWN ARE AT STATION 34 AS SHOWN ON SHEET C-3 IN THE LAKE STREET IMPROVEMENT DRAWINGS PREPARED BY TRANSYSTEMS. SIMILAR CONDITIONS APPLY AT OTHER BENT COLUMN REPLACEMENT LOCATIONS.
5. ESTABLISH BENCHMARK PLAN LOCATION AND ELEVATION FOR EXISTING BENT GIRDER PRIOR TO LOAD TRANSFER TO SHORING FOR CONSTRUCTION MONITORING.
6. SEQUENCING SHOWN IS SYMMETRICAL ABOUT CENTERLINE OF EXISTING TRACK. COLUMN REPLACEMENT SHALL OCCUR SIMULTANEOUSLY AT NORTH/SOUTH ENDS OF EXISTING BENT GIRDERS.

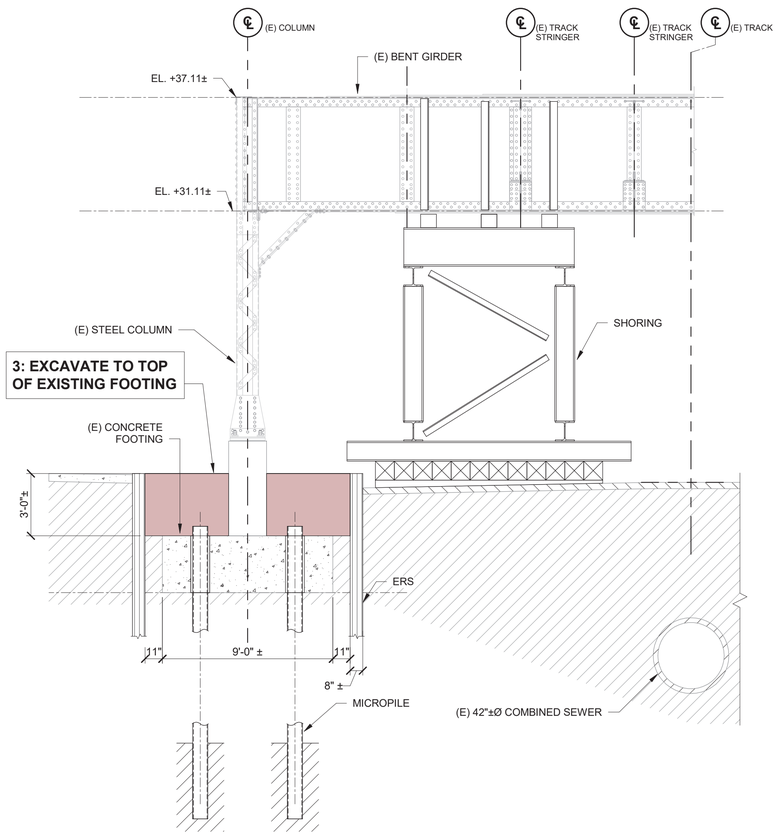

3 PHASE 3
1/4" = 1'-0"

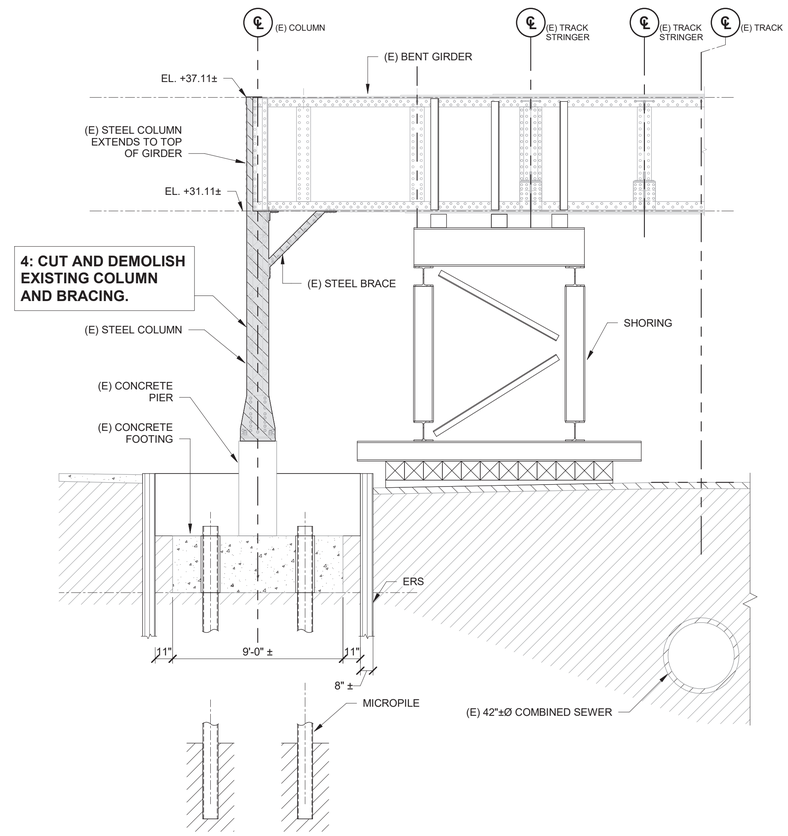

4 PHASE 4
1/4" = 1'-0"

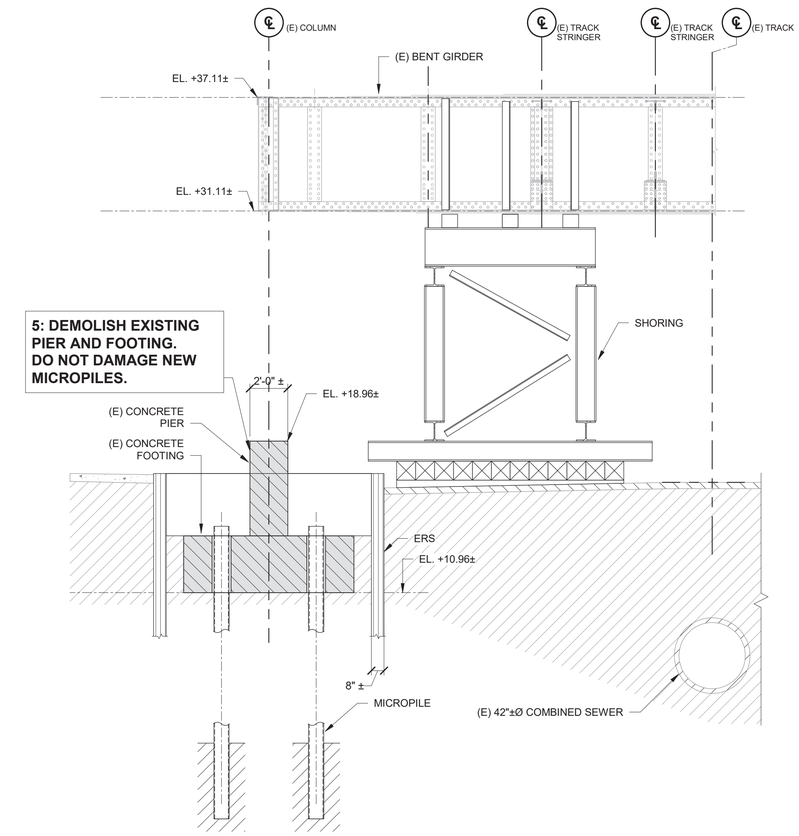

5 PHASE 5
1/4" = 1'-0"

SHEET BEST VIEWED IN COLOR

DESIGN BY:									
DRAWN BY:									
CHECKED BY:									
APPROVED BY:			01/27/2020	ISSUE FOR BID	EJT	HMM	TRM		
CDOT/APPROVED BY:		NO.	DATE	REVISIONS	DES.	DRW.	CHK.	DCCO	CDOT

SIMPSON GUMPERTZ & HEGER
Engineering of Structures and Building Enclosures
Simpson Gumpertz & Heger Inc.
135 South LaSalle Street, Suite 3800
Chicago, Illinois 60603
main: 312.754.7500 fax: 312.754.7501
www.sgh.com

PERKINS+WILL
The Wrigley Building
410 North Michigan Ave.
Suite 1600
Chicago, IL 60611
t 312.755.0770
f 312.755.0775
www.perkinswill.com

CDOT
CHICAGO DEPARTMENT OF TRANSPORTATION
DIVISION OF ENGINEERING

154 N DAMEN AVE - DAMEN GREEN LINE STATION

SUGGESTED CONSTRUCTION SEQUENCE

CDOT PROJECT D-7-135 | DATE: 01/27/2020

SPEC. NO.

DRAWING NO. SD42-01

REVISION NO.

SEQUENCE NOTES:

1. SEQUENCE DETAILS HEREIN ARE CONCEPTUAL. FINAL DESIGN OF TEMPORARY SHORING AND EARTH RETENTION SYSTEMS (ERS), AND SEQUENCING SHALL BE PERFORMED BY A LICENSED STRUCTURAL ENGINEER IN THE STATE OF ILLINOIS UNDER THE DIRECTION OF THE CONTRACTOR.
2. EL. +xx.x' INDICATES ELEVATION WITH RESPECT TO CHICAGO CITY DATUM (CCD).
3. DIMENSIONS NOTED AS ± SHALL BE FIELD VERIFIED BY THE CONTRACTOR PRIOR TO THE WORK.
4. STREET, CURB, AND SIDEWALK ELEVATIONS SHOWN ARE AT STATION 34 AS SHOWN ON SHEET C-3 IN THE LAKE STREET IMPROVEMENT DRAWINGS PREPARED BY TRANSYSTEMS. SIMILAR CONDITIONS APPLY AT OTHER BENT COLUMN REPLACEMENT LOCATIONS.
5. ESTABLISH BENCHMARK PLAN LOCATION AND ELEVATION FOR EXISTING BENT GIRDER PRIOR TO LOAD TRANSFER TO SHORING FOR CONSTRUCTION MONITORING.
6. SEQUENCING SHOWN IS SYMMETRICAL ABOUT CENTERLINE OF EXISTING TRACK. COLUMN REPLACEMENT SHALL OCCUR SIMULTANEOUSLY AT NORTH/SOUTH ENDS OF EXISTING BENT GIRDERS.

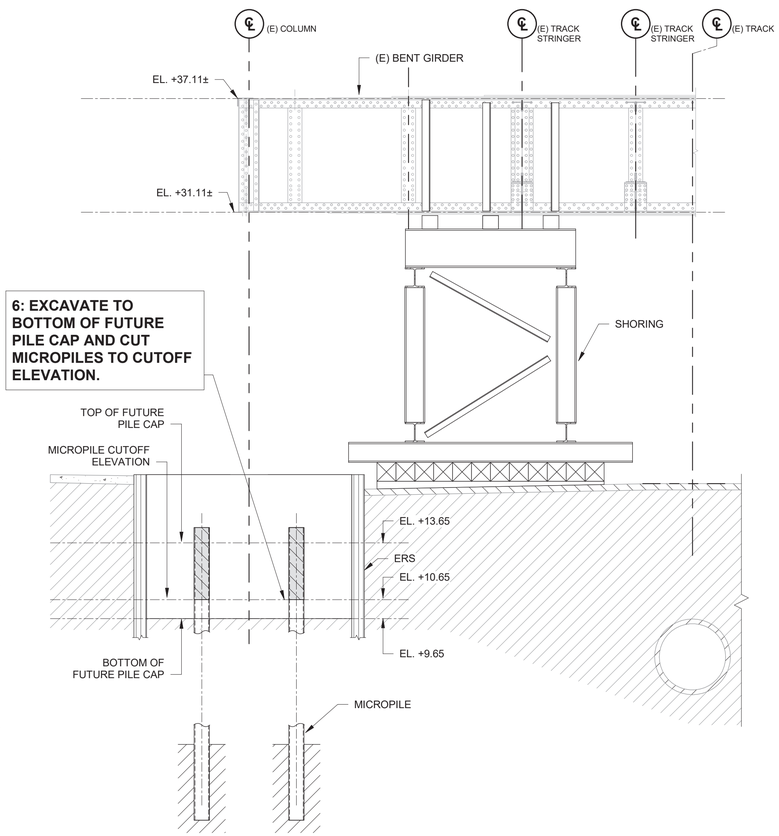

6 PHASE 6
1/4" = 1'-0"

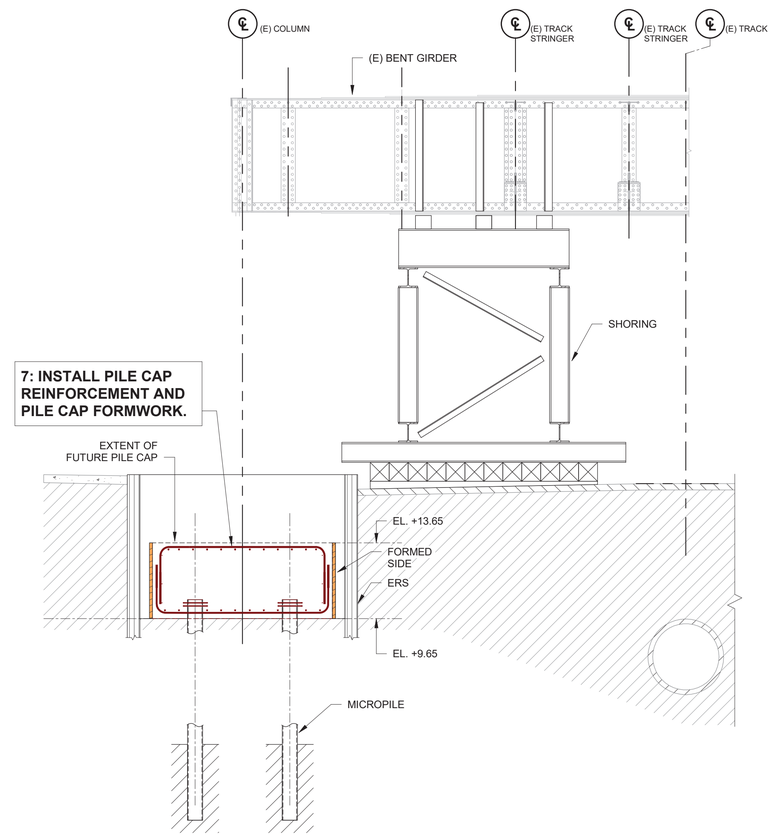

7 PHASE 7
1/4" = 1'-0"

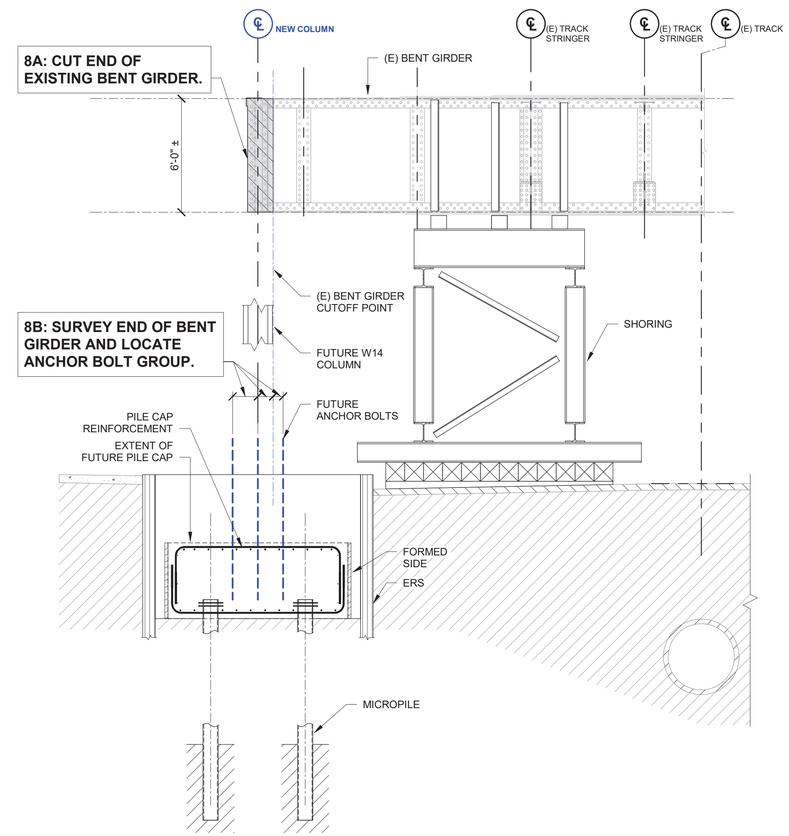

8 PHASE 8
1/4" = 1'-0"

SHEET BEST VIEWED IN COLOR

DESIGN BY:									
DRAWN BY:									
CHECKED BY:									
APPROVED BY:			01/27/2020	ISSUE FOR BID	EJT	HMM	TRM		
CDOT/APPROVED BY:		NO.	DATE	REVISIONS	DES.	DRW.	CHK.	DCCO	CDOT

SIMPSON GUMPERTZ & HEGER
Engineering of Structures and Building Enclosures
Simpson Gumpertz & Heger Inc.
135 South LaSalle Street, Suite 3800
Chicago, Illinois 60603
main: 312.754.7500 fax: 312.754.7501
www.sgh.com

PERKINS+WILL
The Wrigley Building
410 North Michigan Ave.
Suite 1600
Chicago, IL 60611
t 312.755.0770
f 312.755.0775
www.perkinswill.com

CDOT
CHICAGO DEPARTMENT OF TRANSPORTATION
DIVISION OF ENGINEERING

154 N DAMEN AVE - DAMEN GREEN LINE STATION

SUGGESTED CONSTRUCTION SEQUENCE

CDOT PROJECT D-7-135 | DATE: 01/27/2020

SPEC. NO.

DRAWING NO. SD42-02

REVISION NO.

SEQUENCE NOTES:

1. SEQUENCE DETAILS HEREIN ARE CONCEPTUAL. FINAL DESIGN OF TEMPORARY SHORING AND EARTH RETENTION SYSTEMS (ERS), AND SEQUENCING SHALL BE PERFORMED BY A LICENSED STRUCTURAL ENGINEER IN THE STATE OF ILLINOIS UNDER THE DIRECTION OF THE CONTRACTOR.
2. EL. +xx.x' INDICATES ELEVATION WITH RESPECT TO CHICAGO CITY DATUM (CCD).
3. DIMENSIONS NOTED AS ± SHALL BE FIELD VERIFIED BY THE CONTRACTOR PRIOR TO THE WORK.
4. STREET, CURB, AND SIDEWALK ELEVATIONS SHOWN ARE AT STATION 34 AS SHOWN ON SHEET C-3 IN THE LAKE STREET IMPROVEMENT DRAWINGS PREPARED BY TRANSYSTEMS. SIMILAR CONDITIONS APPLY AT OTHER BENT COLUMN REPLACEMENT LOCATIONS.
5. ESTABLISH BENCHMARK PLAN LOCATION AND ELEVATION FOR EXISTING BENT GIRDER PRIOR TO LOAD TRANSFER TO SHORING FOR CONSTRUCTION MONITORING.
6. SEQUENCING SHOWN IS SYMMETRICAL ABOUT CENTERLINE OF EXISTING TRACK. COLUMN REPLACEMENT SHALL OCCUR SIMULTANEOUSLY AT NORTH/SOUTH ENDS OF EXISTING BENT GIRDERS.

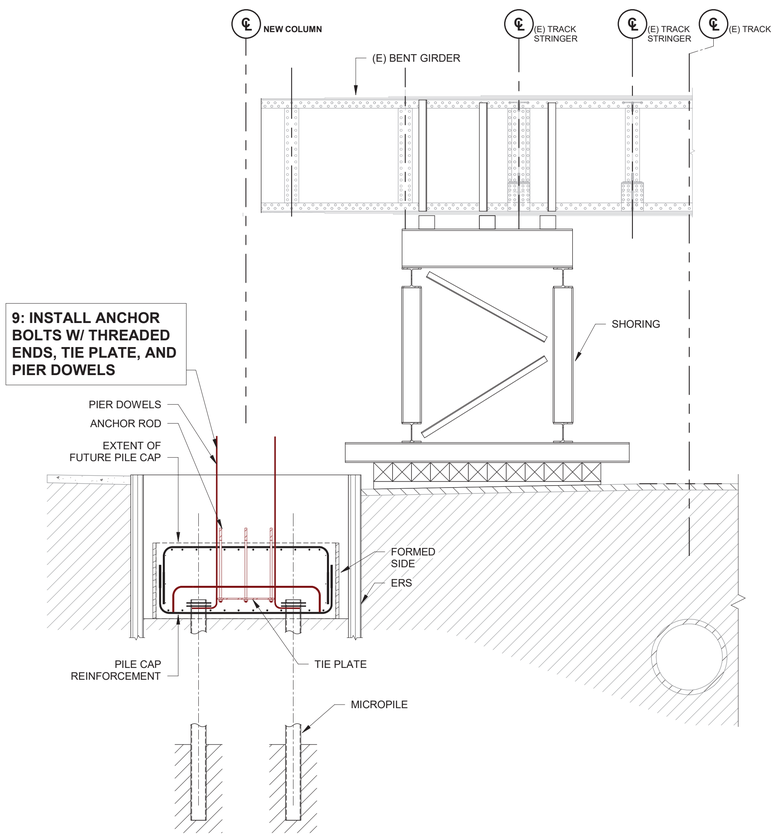

9 PHASE 9
1/4" = 1'-0"

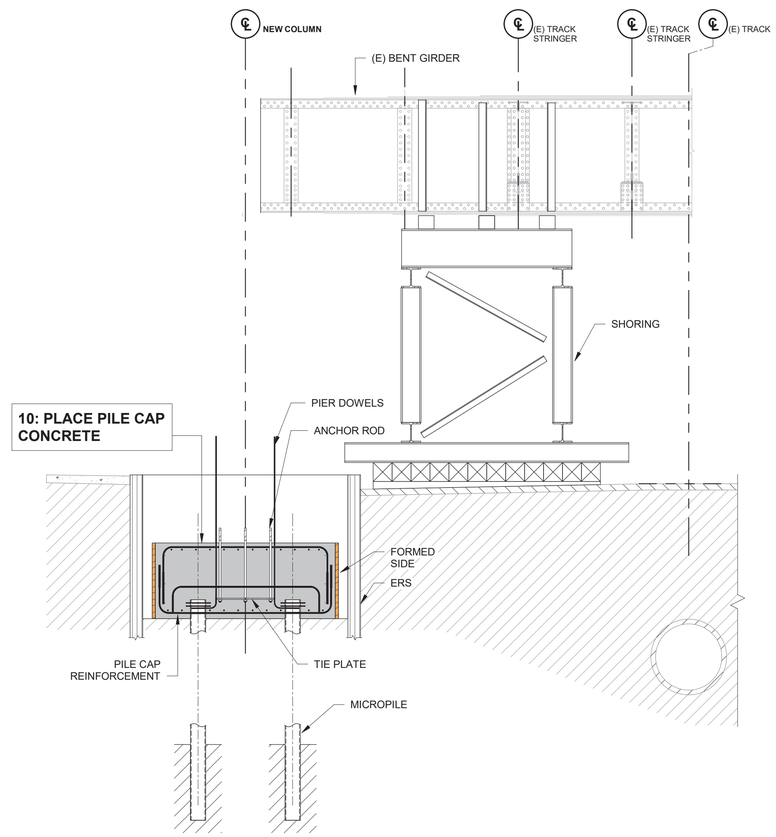

10 PHASE 10
1/4" = 1'-0"

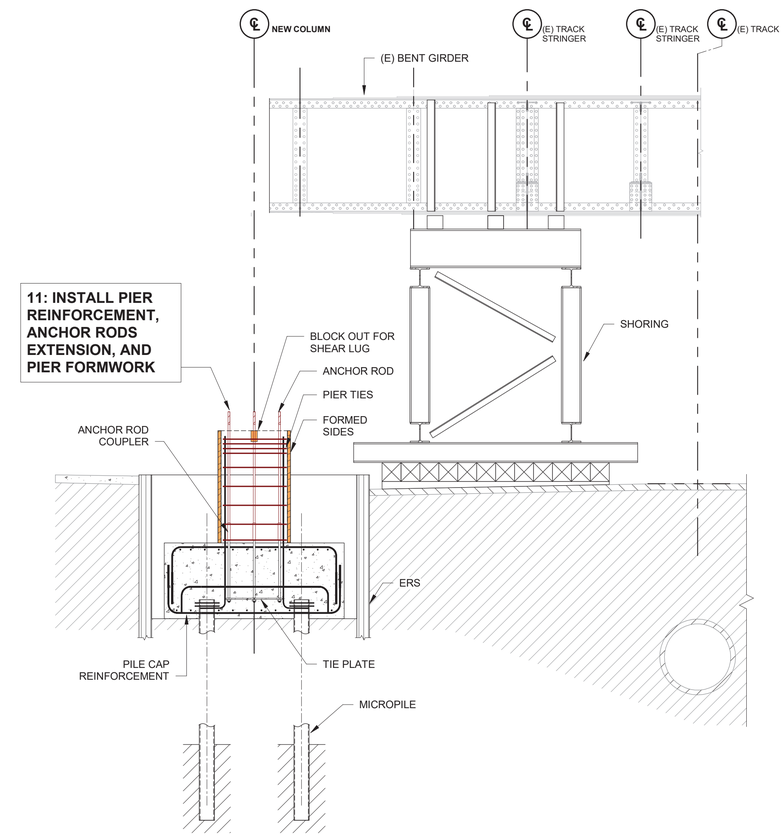

11 PHASE 11
1/4" = 1'-0"

SHEET BEST VIEWED IN COLOR

DESIGN BY:									
DRAWN BY:									
CHECKED BY:									
APPROVED BY:			01/27/2020	ISSUE FOR BID	EJT	HMM	TRM		
CDOT/APPROVED BY:		NO.	DATE	REVISIONS	DES.	DRW.	CHK.	DCCO	CDOT

SIMPSON GUMPERTZ & HEGER
Engineering of Structures and Building Enclosures
Simpson Gumpertz & Heger Inc.
135 South LaSalle Street, Suite 3800
Chicago, Illinois 60603
main: 312.754.7500 fax: 312.754.7501
www.sgh.com

PERKINS+WILL
The Wrigley Building
410 North Michigan Ave.
Suite 1600
Chicago, IL 60611
t 312.755.0770
f 312.755.0775
www.perkinswill.com

CDOT
CHICAGO DEPARTMENT OF TRANSPORTATION
DIVISION OF ENGINEERING

154 N DAMEN AVE - DAMEN GREEN LINE STATION

SUGGESTED CONSTRUCTION SEQUENCE

CDOT PROJECT D-7-135 | DATE: 01/27/2020

SPEC. NO.

DRAWING NO. SD42-03

REVISION NO.

SEQUENCE NOTES:

1. SEQUENCE DETAILS HEREIN ARE CONCEPTUAL. FINAL DESIGN OF TEMPORARY SHORING AND EARTH RETENTION SYSTEMS (ERS), AND SEQUENCING SHALL BE PERFORMED BY A LICENSED STRUCTURAL ENGINEER IN THE STATE OF ILLINOIS UNDER THE DIRECTION OF THE CONTRACTOR.
2. EL. +xx.x' INDICATES ELEVATION WITH RESPECT TO CHICAGO CITY DATUM (CCD).
3. DIMENSIONS NOTED AS ± SHALL BE FIELD VERIFIED BY THE CONTRACTOR PRIOR TO THE WORK.
4. STREET, CURB, AND SIDEWALK ELEVATIONS SHOWN ARE AT STATION 34 AS SHOWN ON SHEET C-3 IN THE LAKE STREET IMPROVEMENT DRAWINGS PREPARED BY TRANSYSTEMS. SIMILAR CONDITIONS APPLY AT OTHER BENT COLUMN REPLACEMENT LOCATIONS.
5. ESTABLISH BENCHMARK PLAN LOCATION AND ELEVATION FOR EXISTING BENT GIRDER PRIOR TO LOAD TRANSFER TO SHORING FOR CONSTRUCTION MONITORING.
6. SEQUENCING SHOWN IS SYMMETRICAL ABOUT CENTERLINE OF EXISTING TRACK. COLUMN REPLACEMENT SHALL OCCUR SIMULTANEOUSLY AT NORTH/SOUTH ENDS OF EXISTING BENT GIRDERS.

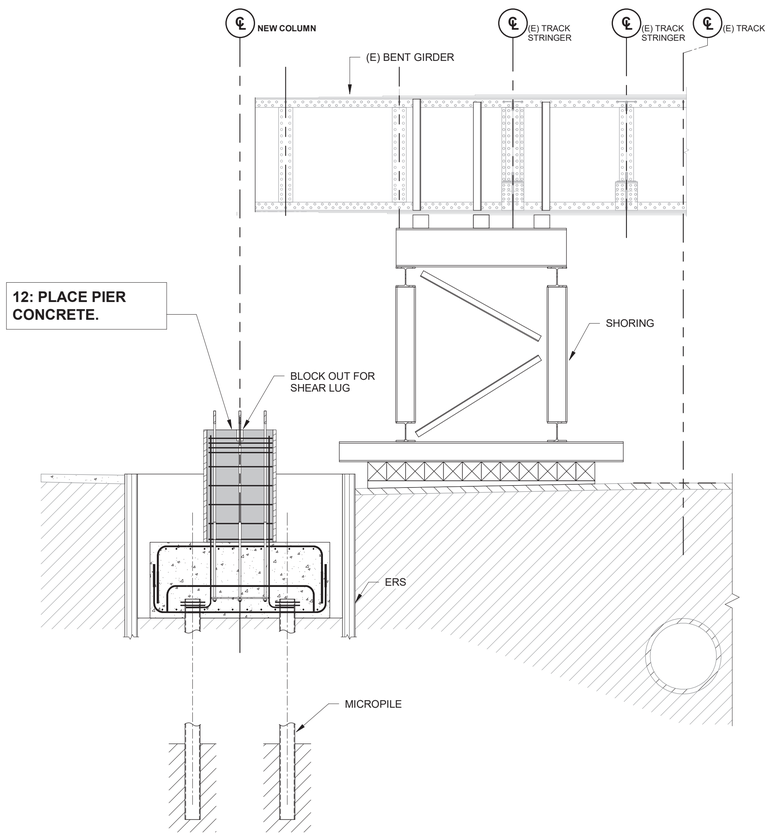

12 PHASE 12
1/4" = 1'-0"

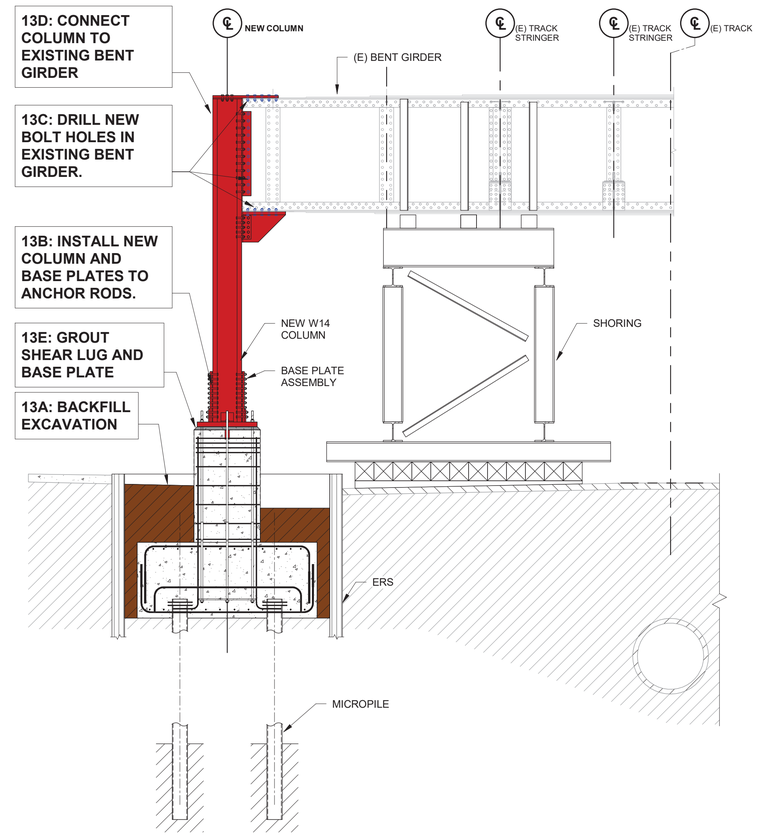

13 PHASE 13
1/4" = 1'-0"

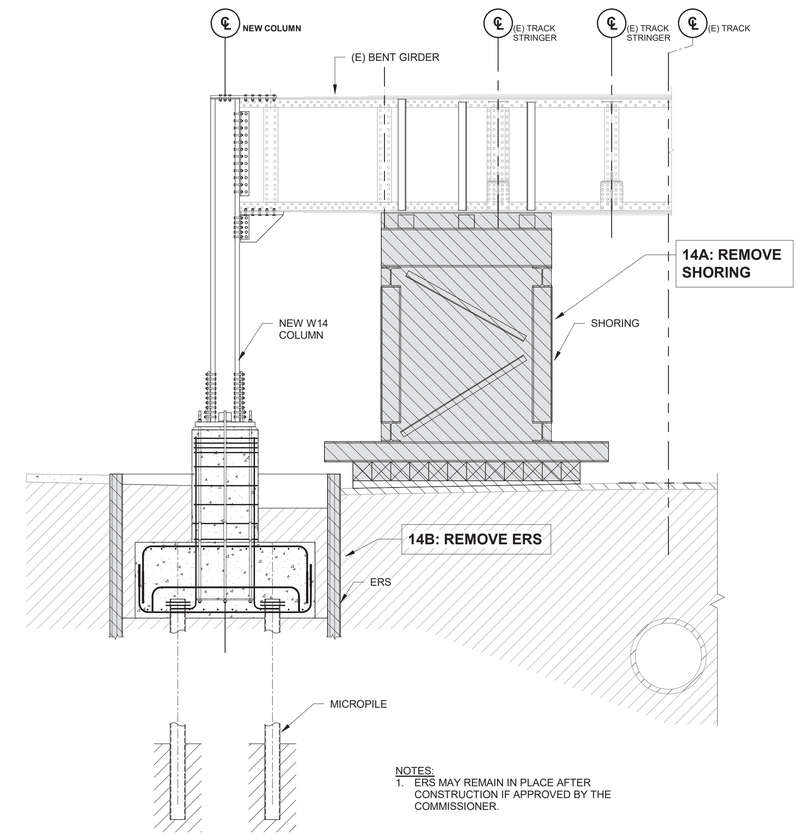

NOTES:
1. ERS MAY REMAIN IN PLACE AFTER CONSTRUCTION IF APPROVED BY THE COMMISSIONER.

14 PHASE 14
1/4" = 1'-0"

SHEET BEST VIEWED IN COLOR

DESIGN BY:									
DRAWN BY:									
CHECKED BY:									
APPROVED BY:			01/27/2020	ISSUE FOR BID	EJT	HMM	TRM		
CDOT/APPROVED BY:		NO.	DATE	REVISIONS	DES.	DRW.	CHK.	DCCO	CDOT

SIMPSON GUMPERTZ & HEGER
Engineering of Structures and Building Enclosures
Simpson Gumpertz & Heger Inc.
135 South LaSalle Street, Suite 3800
Chicago, Illinois 60603
main: 312.754.7500 fax: 312.754.7501
www.sgh.com

PERKINS+WILL
The Wrigley Building
410 North Michigan Ave.
Suite 1600
Chicago, IL 60611
t 312.755.0770
f 312.755.0775
www.perkinswill.com

CDOT
CHICAGO DEPARTMENT OF TRANSPORTATION
DIVISION OF ENGINEERING

154 N DAMEN AVE - DAMEN GREEN LINE STATION

SUGGESTED CONSTRUCTION SEQUENCE

CDOT PROJECT D-7-135 | DATE: 01/27/2020

SPEC. NO.

DRAWING NO. SD42-04

REVISION NO.

SEQUENCE NOTES:

1. SEQUENCE DETAILS HEREIN ARE CONCEPTUAL. FINAL DESIGN OF TEMPORARY SHORING AND EARTH RETENTION SYSTEMS (ERS), AND SEQUENCING SHALL BE PERFORMED BY A LICENSED STRUCTURAL ENGINEER IN THE STATE OF ILLINOIS UNDER THE DIRECTION OF THE CONTRACTOR.
2. EL. +xx.x' INDICATES ELEVATION WITH RESPECT TO CHICAGO CITY DATUM (CCD).
3. DIMENSIONS NOTED AS ± SHALL BE FIELD VERIFIED BY THE CONTRACTOR PRIOR TO THE WORK.
4. STREET, CURB, AND SIDEWALK ELEVATIONS SHOWN ARE AT STATION 34 AS SHOWN ON SHEET C-3 IN THE LAKE STREET IMPROVEMENT DRAWINGS PREPARED BY TRANSYSTEMS. SIMILAR CONDITIONS APPLY AT OTHER BENT COLUMN REPLACEMENT LOCATIONS.
5. ESTABLISH BENCHMARK PLAN LOCATION AND ELEVATION FOR EXISTING BENT GIRDER PRIOR TO LOAD TRANSFER TO SHORING FOR CONSTRUCTION MONITORING.
6. SEQUENCING SHOWN IS SYMMETRICAL ABOUT CENTERLINE OF EXISTING TRACK. COLUMN REPLACEMENT SHALL OCCUR SIMULTANEOUSLY AT NORTH/SOUTH ENDS OF EXISTING BENT GIRDERS.

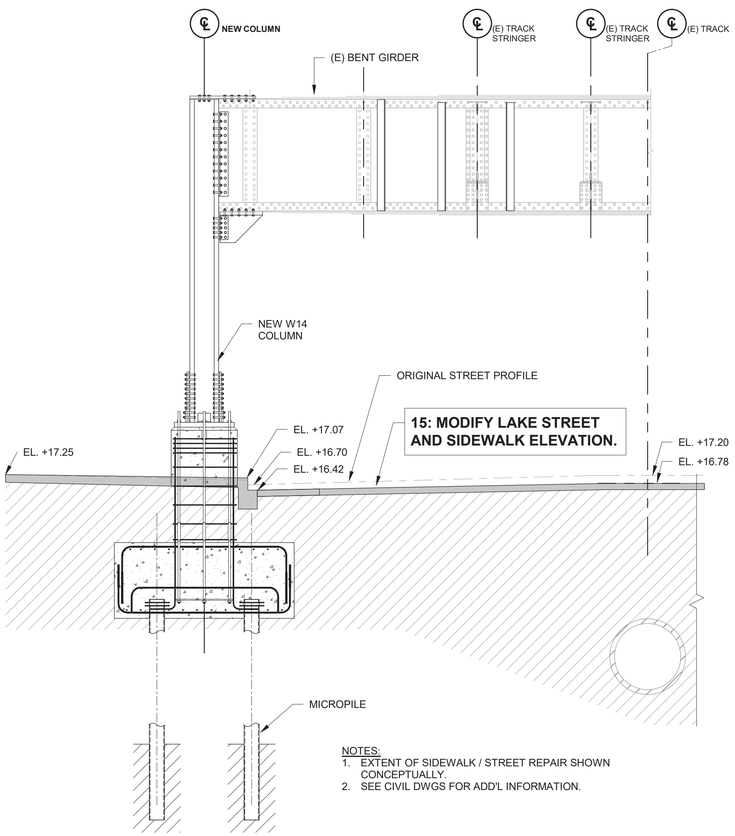

NOTES:
1. EXTENT OF SIDEWALK / STREET REPAIR SHOWN CONCEPTUALLY.
2. SEE CIVIL DWGS FOR ADD'L INFORMATION.

15 PHASE 15
1/4" = 1'-0"

SHEET BEST VIEWED IN COLOR

DESIGN BY:									
DRAWN BY:									
CHECKED BY:									
APPROVED BY:			01/27/2020	ISSUE FOR BID	EJT	HMM	TRM		
CDOT/APPROVED BY:		NO.	DATE	REVISIONS	DES.	DRW.	CHK.	DCCO	CDOT

SIMPSON GUMPERTZ & HEGER
Engineering of Structures and Building Enclosures
Simpson Gumpertz & Heger Inc.
135 South LaSalle Street, Suite 3800
Chicago, Illinois 60603
main: 312.754.7500 fax: 312.754.7501
www.sgh.com

PERKINS+WILL
The Wrigley Building
410 North Michigan Ave.
Suite 1600
Chicago, IL 60611
t 312.755.0770
f 312.755.0775
www.perkinswill.com

CDOT
CHICAGO DEPARTMENT OF TRANSPORTATION
DIVISION OF ENGINEERING

154 N DAMEN AVE - DAMEN GREEN LINE STATION

SUGGESTED CONSTRUCTION SEQUENCE

CDOT PROJECT D-7-135

DATE: 01/27/2020

SPEC. NO.

DRAWING NO. SD42-05

REVISION NO.

Drawing Notes:

1. For General Notes, Abbreviations and Symbols, See Drawings S00-01 through S00-03
2. Contractor shall visually inspect the condition of attachment points to the existing structure prior to installation to ensure that the existing structure is free of from damage, section loss, rust, scale, voids, cracks, spalls or any other visually observable adverse condition. If any such conditions are identified, contact CTA prior to proceeding with work.
3. Refer to Drawings TPE 10.01 to TPE 10.03 and TPE 40.02 for cable routing.

Washington Substation Work Items

1. Extend dielectric floor in Washington Substation to a minimum of 3ft past the new switchgear enclosures. See Drawing EWA-101-AE.
2. Dielectric floor shall be installed per Specification 096710 to achieve a flat floor. Install switchgear to meet manufacturer's levelness/flatness requirements.
3. Concrete floor shall be prepared to receive dielectric coating per Specification 096710 and shall be completed using temporary means of collecting and containing dust as required. See Specification 024500.
4. Do not mar, cut, or otherwise damage existing concrete reinforcement during installation. If required, perform non-destructive examination to identify the depth of rebar.
5. Contractor shall only use existing penetrations in substation floor and existing cable tray to route new electrical cables from the substation to the electrical riser.
6. Electrical switchgear equipment cabinet shall be anchored to the floor per switchgear manufacturer's requirements. Concrete expansion anchors shall be isolated from the electrical switchgear cabinet with solid nylon washers.

Traction Power Physical Design

1. Provide traction power cable/conduit supports on existing steel, as shown on sheets TPS1.01 through TPS1.14.
2. Spacing of supports for traction power cables not enclosed in conduit for the cable's entire span shall not exceed 20ft o/c.
3. Spacing of supports for traction power cables enclosed in conduit shall not exceed 8ft o/c.
4. Contractor to verify existing steel web thicknesses are 1/2" min.
5. Upon leaving the cable riser, all traction power cables shall maintain a minimum of 14ft-6 clearance between grade and low point of cable. Additional supports may be required at low points of cable run to maintain the required clearance. Refer to
6. Provide new opening in web of in-place trackway girder as shown on Drawing TPS2.01. Reinforce the opening as indicated. Do not weld to existing trackway framing. 2 / TPS1.00
7. All steel supports shall be ASTM A36 UON.
8. Use galvanized ASTM A325 high strength 3/4" dia. bolts in 13/16" holes for structural attachment.
9. All holes made in Train Carrying Members shall be drilled full size. Burning and Reaming of holes is not allowed.
10. Hot Dip Galvanize all steel after welding and drilling, ASTM A123.
11. All timber shall be Dense Structural Grade Yellow Pine, pressure treated with AWPA Type P1(95) for Creo-Pine to a net retention of 8 lb per cu. ft. Support hardware for timber and portion of structure covered by support hardware shall be painted with one coat of rustproofing paint.
12. Through bolts shall be 3/4" A307 Galvanized, UON.

Access Platforms

1. Provide two new access platforms for switching of Traction Power cables. See Drawing TPS1.02. Contractor shall field-locate platforms within designated bays.
2. See drawings TPS1.02 for member sizes.
3. Bolt timber joists to angles only. Use 3/8" DIA hot dip galvanized carriage bolts with heavy hex lock nuts UON. Counterblow 1" deep. Back fill counterbore with "duct seal" or equal.
4. Through bolt timber supports to angle frame using 3/4" DIA A307 bolts, nuts and two washers in 13/16" holes.
5. All holes made into train carrying members shall be drilled full size, burning and reaming of holes shall not be allowed.
6. Fasteners used for platform frame assembly or stringer connections shall consist of high strength steel 7/8" DIA bolts (ASTM A325 UON), washers and nuts installed in 15/16" holes unless otherwise noted. These fasteners shall conform to latest edition ASTM specifications A325, F436 and A563 respectively. See specifications for method of fastener installation.
7. Do not weld switch platform to structure.
8. All frame connections shall be shop welded all around with 1/4" continuous fillet welds using E70 electrodes unless otherwise noted.
9. Mounting of timber supports shown are for typical switch enclosure installation. Any deviation in switch enclosure dimension will require modifications of the platform framing and location of timber supports.
10. Mounting bolts for enclosure shall be 1/2" DIA stainless steel conforming to ASTM A193. Square plate washers, lock washers and nuts shall be stainless steel.
11. All new miscellaneous steel shall receive the following:
    A. One (1) shop coat and one (1) field coat of 2-part aluminum pigmented epoxy mastic, 5 mil DFT per coat.
    B. One (1) field finish coat of aliphatic acrylic urethane, 1.5 mils DFT. Color to match that of existing track stringer.
    C. Shop and field contact surfaces, or surfaces within 2" of field welds, shall not be painted in the shop.
    D. All paints used shall be productions of the same manufacturer, and shall be applied in accordance with paint manufacturers published instructions and recommendations.
12. All timber shall be treated with AWPA type P1 for Ceo-Pine.
13. Hazardous Working Conditions: Caution all employees of the presence of contact rail (600 volts DC) and moving trains on the CTA tracks. Take all necessary precautions to prevent damage to life or property through contact with the electrical or operation systems. Any contact with the live contact rail or "live" portions of train under-carriage may result in a severe burn or death.
14. All dimensions are in feet and inches unless shown otherwise. Contractor shall verify all existing dimesions in field prior to commencing any fabrication, or erection.

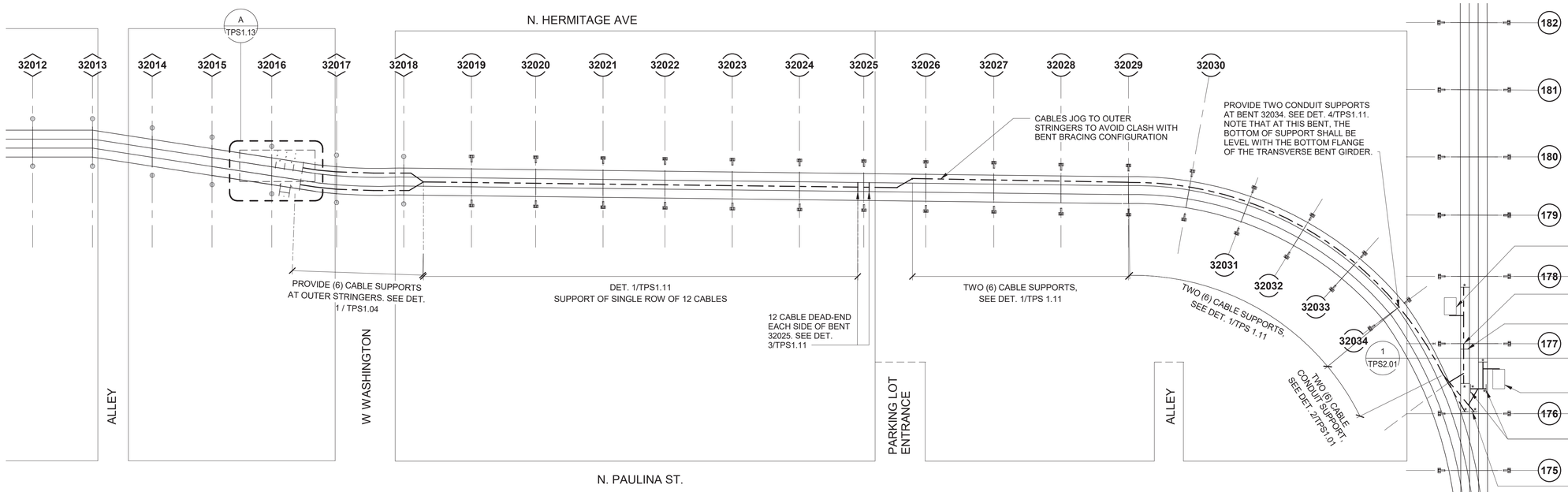

PLAN NOTES:

1. TRACTION POWER CABLE ROUTE SHOWN INDICATIVELY ONLY. FOR ROUTE DETAILS SEE TPE 10-01 TO TPE 10-3, AND TPE 40-02.
2. * REFERS TO TIMBER DEAD-END. SEE DET. 2/TPS 1.12 UON ON PLAN.

1 PLAN
1" = 40'-0"

2 DETAIL OF MAX. TRACTION POWER CABLE SAG
1/2" = 1'-0"

DESIGN BY:								
DRAWN BY:								
CHECKED BY:								
APPROVED BY:			01/27/2020	ISSUE FOR BID	EAE	EAE	CMH	
CDOT/APPROVED BY:		NO.	DATE	REVISIONS	DES.	DRW.	CHK.	DCCO	CDOT

SIMPSON GUMPERTZ & HEGER
Engineering of Structures and Building Enclosures
Simpson Gumpertz & Heger Inc.
135 South LaSalle Street, Suite 3800
Chicago, Illinois 60603
main: 312.754.7500 fax: 312.754.7501
www.sgh.com

PERKINS+WILL
The Wrigley Building
410 North Michigan Ave.
Suite 1600
Chicago, IL 60611
t 312.755.0770
f 312.755.0775
www.perkinswill.com

CDOT
CHICAGO DEPARTMENT OF TRANSPORTATION
DIVISION OF ENGINEERING

154 N DAMEN AVE - DAMEN GREEN LINE STATION

TRACTION POWER - PLAN

CDOT PROJECT D-7-135

DATE: 01/27/2020

SPEC. NO.

DRAWING NO. TPS1.00

REVISION NO.

DRAWING NOTES:

1. SEE DRAWING TPS1.00
2. ELEVATION ABOVE GRADE AT LOWEST POINT ON CABLE TO BE NO LESS THAN 14'-6". CABLE SUPPORTS SHALL BE ABOVE 14'-6" OR ABOVE THE ELEVATION OF THE LOWEST POINT OF ADJACENT STRUCTURE.
3. CONTRACTOR TO VERIFY ALL EXISTING WEB THICKNESSES ARE 1/2" MIN. UON.

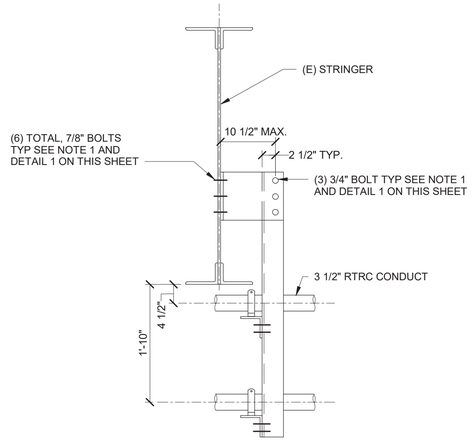

NOTES:
1. CONNECT NEW STEEL TO EXISTING CTA STRUCTURE WITH 7/8" H.S.BOLTS. ALL OTHER CONNECTIONS SHOULD BE MADE USING 3/4" H.S.BOLTS.

A CONDUIT SUPPORT
NTS

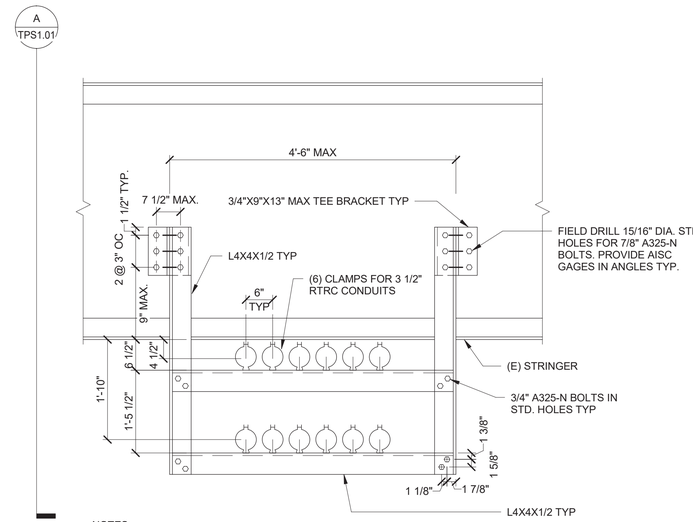

NOTES:
1. CONNECT NEW STEEL TO EXISTING CTA STRUCTURE WITH 7/8" H.S.BOLTS. ALL OTHER CONNECTIONS SHOULD BE MADE USING 3/4" H.S.BOLTS.

1 CONDUIT SUPPORT
NTS

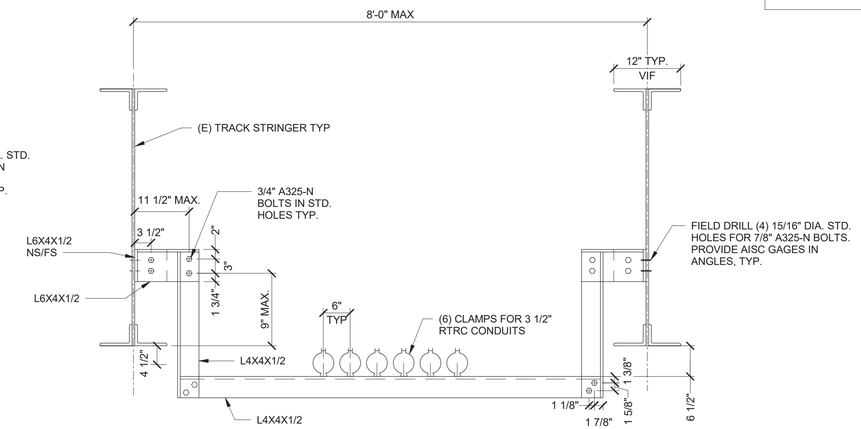

NOTES:
1. CONNECT NEW STEEL TO EXISTING CTA STRUCTURE WITH 7/8" H.S.BOLTS. ALL OTHER CONNECTIONS SHOULD BE MADE USING 3/4" H.S.BOLTS.

2 CONDUIT SUPPORT
NTS

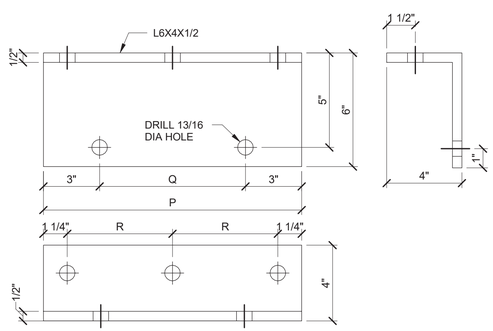

3 DETAIL OF LUG ANGLE
NTS

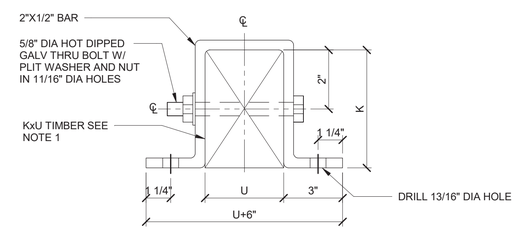

TABLE OF VARIABLE DIMENSIONS K & U ARE TIMBER SIZES						REMARKS
U–CLAMP	K	U	Q	P	R	
TYPE C	6"	6"	9 1/2"	15 1/2"	6 1/2"	–
TYPE D	6"	8"	11 1/2"	17 1/2"	7 1/2"	DEAD END

NOTE:
1. ALL TIMBER SHALL BE DENSE STRUCTURAL GRADE YELLOW PINE PRESSURE TREATED WITH AWPA TYPE P1(95) FOR CREO-PINE TO A NET RETENTION OF 8 PCF. SUPPORT HARDWARE FOR TIMBER AND PORTION OF STRUCTURE COVERED BY SUPPORT HARDWARE SHALL BE PAINTED WITH ONE COAT OF RUSTPROOFING PAINT.

4 DETAIL OF U CLAMP
3/4" = 1'-0"

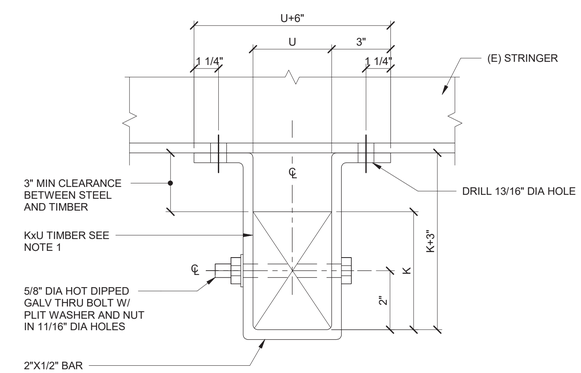

NOTE:
1. ALL TIMBER SHALL BE DENSE STRUCTURAL GRADE YELLOW PINE PRESSURE TREATED WITH AWPA TYPE P1(95) FOR CREO-PINE TO A NET RETENTION OF 8 PCF. SUPPORT HARDWARE FOR TIMBER AND PORTION OF STRUCTURE COVERED BY SUPPORT HARDWARE SHALL BE PAINTED WITH ONE COAT OF RUSTPROOFING PAINT.

5 DETAIL OF U CLAMP OUTSIDE STRAP
NTS

DESIGN BY:								
DRAWN BY:								
CHECKED BY:								
APPROVED BY:			01/27/2020	ISSUE FOR BID	EAE	EAE	CMH	
CDOT/APPROVED BY:		NO.	DATE	REVISIONS	DES.	DRW.	CHK.	DCCO	CDOT

SIMPSON GUMPERTZ & HEGER
Engineering of Structures and Building Enclosures
Simpson Gumpertz & Heger Inc.
135 South LaSalle Street, Suite 3800
Chicago, Illinois 60603
main: 312.754.7500 fax: 312.754.7501
www.sgh.com

PERKINS+WILL
The Wrigley Building
410 North Michigan Ave.
Suite 1600
Chicago, IL 60611
t 312.755.0770
f 312.755.0775
www.perkinswill.com

CDOT
CHICAGO DEPARTMENT OF TRANSPORTATION
DIVISION OF ENGINEERING

154 N DAMEN AVE - DAMEN GREEN LINE STATION

TRACTION POWER - STANDARD STRUCTURAL DETAILS

CDOT PROJECT D-7-135 | DATE: 01/27/2020

SPEC. NO.

DRAWING NO. **TPS1.01**

REVISION NO.

DRAWING NOTES:

1. SEE DRAWING TPS1.00
2. ELEVATION ABOVE GRADE AT LOWEST POINT ON CABLE TO BE NO LESS THAN 14'-6". CABLE SUPPORTS SHALL BE ABOVE 14'-6" OR ABOVE THE ELEVATION OF THE LOWEST POINT OF ADJACENT STRUCTURE.
3. CONTRACTOR TO VERIFY ALL EXISTING WEB THICKNESSES ARE 1/2" MIN. UON.

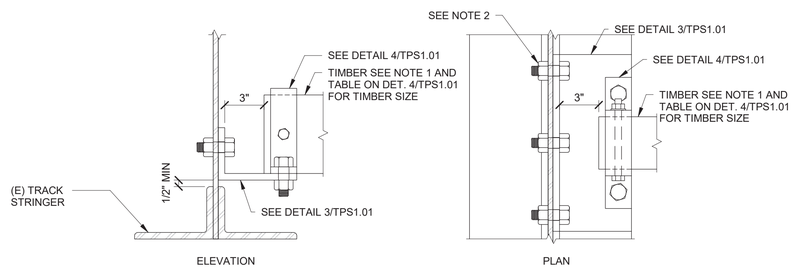

NOTE:
1. ALL TIMBER SHALL BE DENSE STRUCTURAL GRADE YELLOW PINE PRESSURE TREATED WITH AWPA TYPE P1(95) FOR CREO-PINE TO A NET RETENTION OF 8 PCF. SUPPORT HARDWARE FOR TIMBER AND PORTION OF STRUCTURE COVERED BY SUPPORT HARDWARE SHALL BE PAINTED WITH ONE COAT OF RUSTPROOFING PAINT.
2. USE GALVANIZED ASTM A325 HIGH STRENGTH 3/4" DIA BOLTS IN 13/16" DIA HOLES FOR STRUCTURAL ATTACHMENT.

2 DETAIL OF WEB MOUNTED CROSS ARM TIMBER
NTS

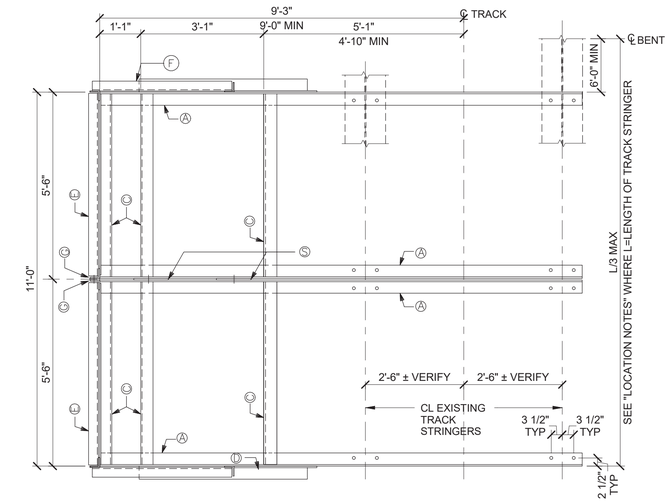

3 SOLID WEB TRACK STRINGER PLAN VIEW
NTS

STRUCTURAL STEEL SCHEDULE			
ITEM	SHAPE	LENGTH *	NOTES
A	L(4"x4"x1/2")	12'-3"	
B	L(4"x4"x1/2")	9'-0"	
C	L(4"x4"x1/2")	5'-4 13/16"	
D	L(4"x4"x1/2")	6'-5"	
D1	L(4"x4"x1/2")	6'-2"	
E	L(3"x3"x3/8")	5'-4 7/16"	
F	L(3"x3"x3/8")	3'-6 1/2"	
G	L(3"x3"x3/8")	7'-9"	
H	L(3"x3"x3/8")	4'-3"	
J	L(4"x4"x1/2")	7'-0" MIN	
J1	L(4"x4"x1/2")	4'-6"	
K	L(4"x4"x1/2")	4'-1" MIN	
L	WT (12"x27.5")	0'-9"	
M	BAR (4"x3/8")	3'-6"	KICK PLATE
N	L(3"x3"x3/8")	0'-3 1/2"	
P	L(4"x4"x1/2")	7'-2"	
P1	L(4"x4"x1/2")	6'-9"	
R	L(4"x4"x1/2")	6'-4"	
R1	L(4"x4"x1/2")	5'-10"	
S	PLATE (3/8"x9")	0'-9"	GUSSET PLATE
T	PLATE (3/8"x3")	0'-3"	GUSSET PLATE

CONTRACTOR SHALL VERIFY DIMENSIONS OF ALL EXISTING STRUCTURES IN FIELD PRIOR TO ANY FABRICATION, OR ERECTION. ADJUST ANGLE LENGTH BASED ON FIELD-SURVEY RESULTS.

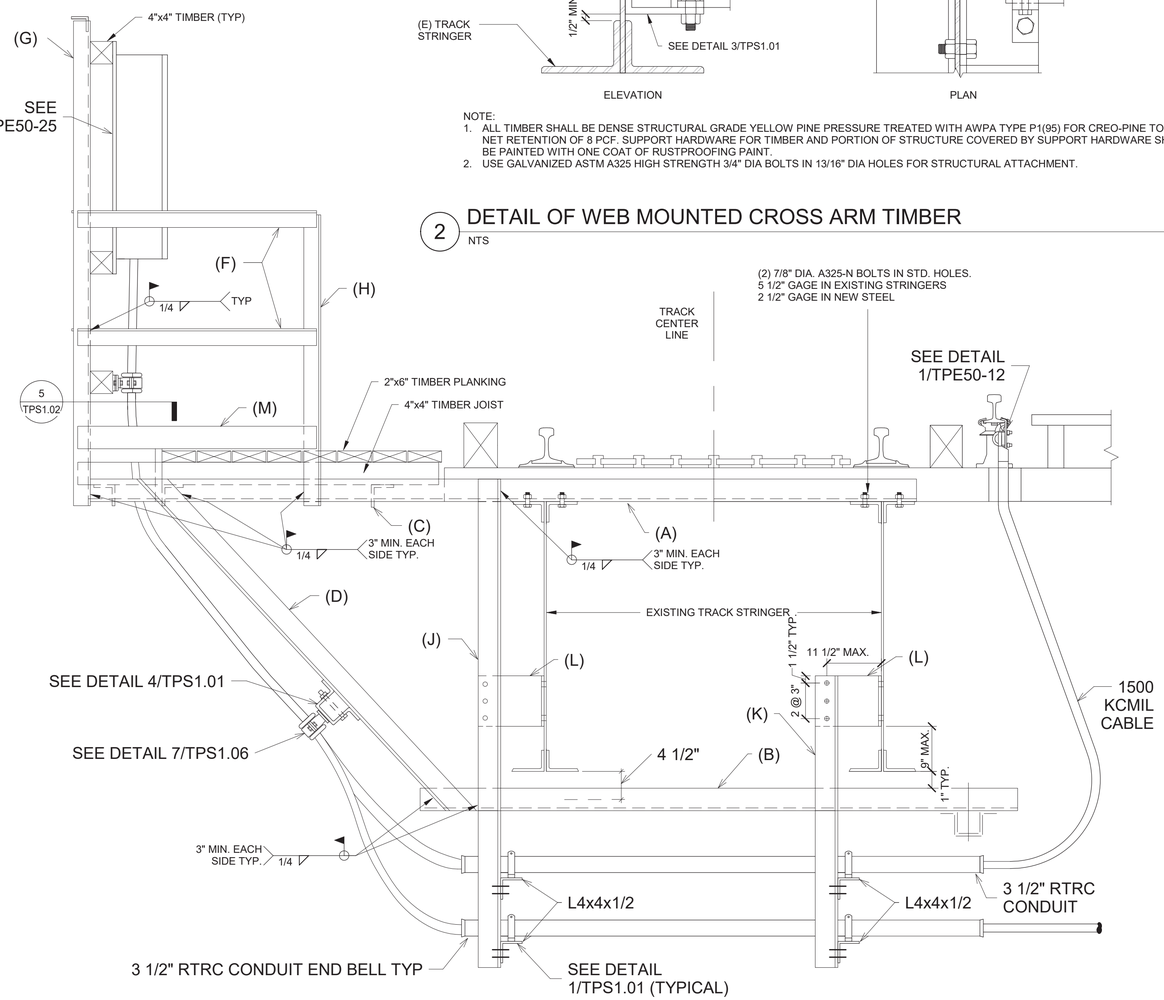

1 SOLID WEB TRACK STRINGER - PLATFORM SECTION DETAIL
NTS

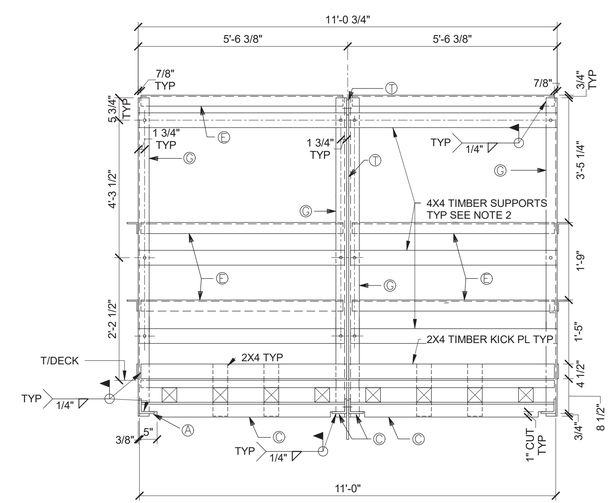

4 SECTION
NTS

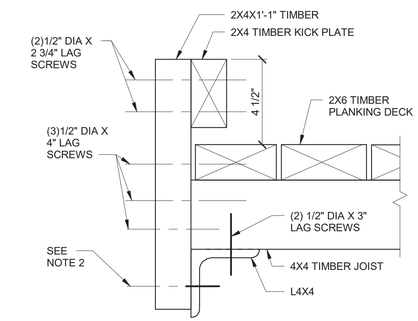

7 DETAIL - SECTION
NTS

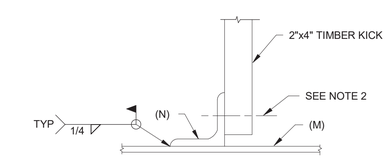

5 DETAIL - PLAN
NTS

DESIGN BY:									
DRAWN BY:									
CHECKED BY:									
APPROVED BY:			01/27/2020	ISSUE FOR BID	ETF	ETF	CMH		
CDOT/APPROVED BY:		NO.	DATE	REVISIONS	DES.	DRW.	CHK.	DCCO	CDOT

SIMPSON GUMPERTZ & HEGER
Engineering of Structures and Building Enclosures
Simpson Gumpertz & Heger Inc.
135 South LaSalle Street, Suite 3800
Chicago, Illinois 60603
main: 312.754.7500 fax: 312.754.7501
www.sgh.com

PERKINS+WILL
The Wrigley Building
410 North Michigan Ave.
Suite 1600
Chicago, IL 60611
t 312.755.0770
f 312.755.0775
www.perkinswill.com

CDOT
CHICAGO DEPARTMENT OF TRANSPORTATION
DIVISION OF ENGINEERING

154 N DAMEN AVE - DAMEN GREEN LINE STATION

TRACTION POWER - STANDARD STRUCTURAL DETAILS

CDOT PROJECT D-7-135 | DATE: 01/27/2020

SPEC. NO.

DRAWING NO. TPS1.02

REVISION NO.

DRAWING NOTES:

1. SEE DRAWING TPS1.00
2. ELEVATION ABOVE GRADE AT LOWEST POINT ON CABLE TO BE NO LESS THAN 14'-6". CABLE SUPPORTS SHALL BE ABOVE 14'-6" OR ABOVE THE ELEVATION OF THE LOWEST POINT OF ADJACENT STRUCTURE.
3. CONTRACTOR TO VERIFY ALL EXISTING WEB THICKNESSES ARE 1/2" MIN. UON.

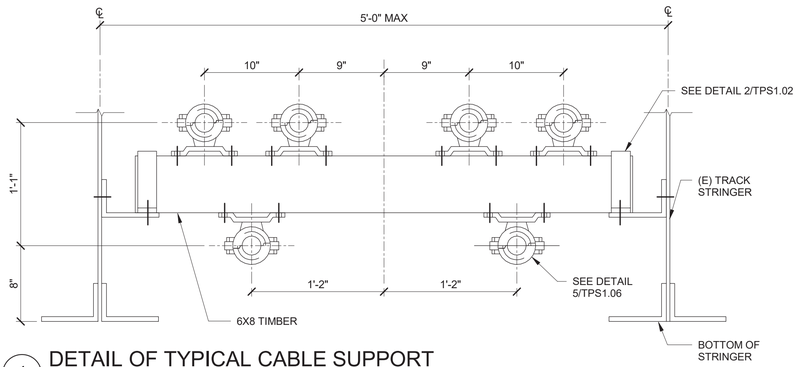

1 DETAIL OF TYPICAL CABLE SUPPORT
NTS

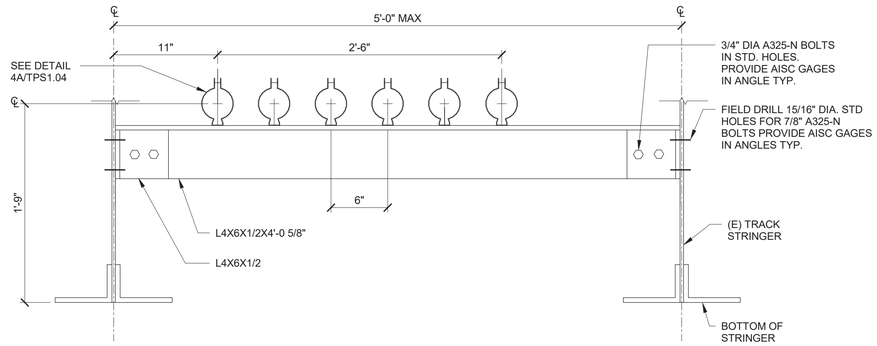

2 DETAIL OF TYPICAL CONDUIT SUPPORT
NTS

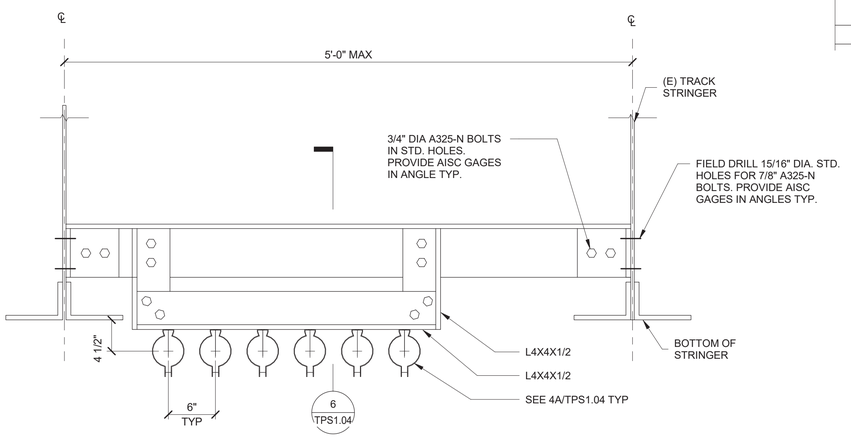

3 DETAIL OF TYPICAL CONDUIT SUPPORT
NTS

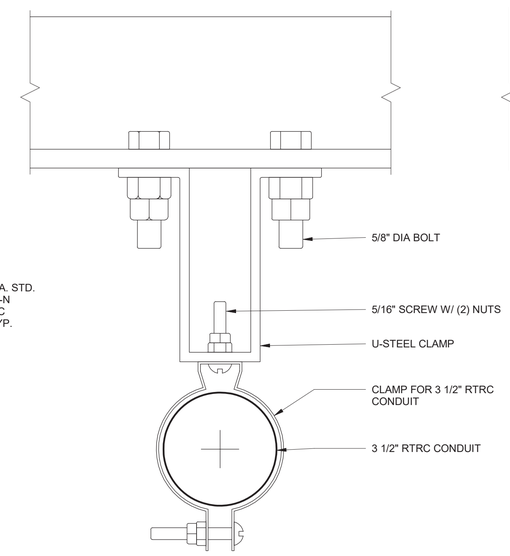

4 DETAIL OF TYPICAL CONDUIT SUPPORT
NTS

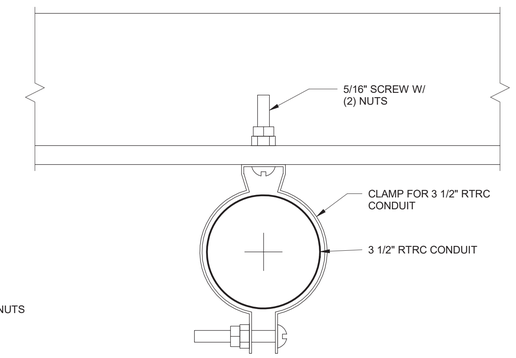

4A DETAIL OF TYPICAL CONDUIT SUPPORT
NTS

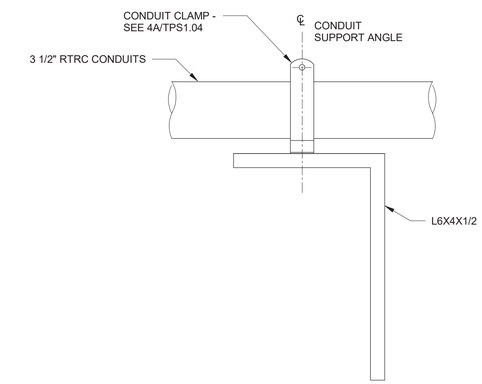

6 DETAIL OF TYPICAL CONDUIT SUPPORT
NTS

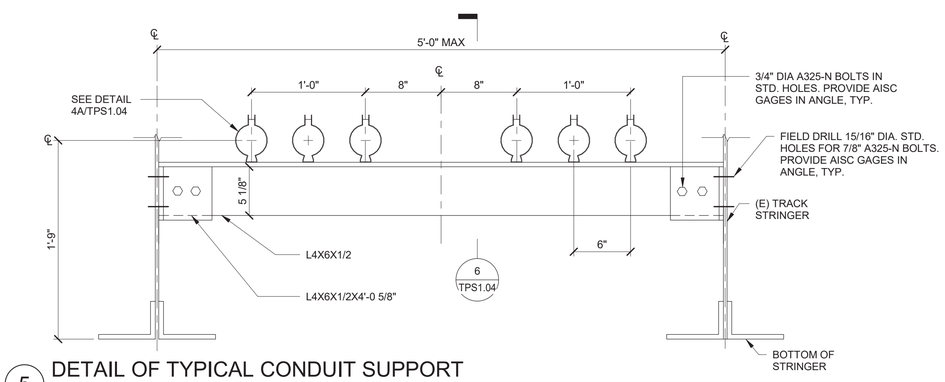

5 DETAIL OF TYPICAL CONDUIT SUPPORT
NTS

DESIGN BY:								
DRAWN BY:								
CHECKED BY:								
APPROVED BY:			01/27/2020	ISSUE FOR BID	EAE	EAE	CMH	
CDOT/APPROVED BY:		NO.	DATE	REVISIONS	DES.	DRW.	CHK.	DCCO	CDOT

SIMPSON GUMPERTZ & HEGER
Engineering of Structures and Building Enclosures
Simpson Gumpertz & Heger Inc.
135 South LaSalle Street, Suite 3800
Chicago, Illinois 60603
main: 312.754.7500 fax: 312.754.7501
www.sgh.com

PERKINS+WILL
The Wrigley Building
410 North Michigan Ave.
Suite 1600
Chicago, IL 60611
t 312.755.0770
f 312.755.0775
www.perkinswill.com

CDOT
CHICAGO DEPARTMENT OF TRANSPORTATION
DIVISION OF ENGINEERING

154 N DAMEN AVE - DAMEN GREEN LINE STATION

TRACTION POWER - STANDARD STRUCTURAL DETAILS

CDOT PROJECT D-7-135 | DATE: 01/27/2020

SPEC. NO.

DRAWING NO. TPS1.04

REVISION NO.

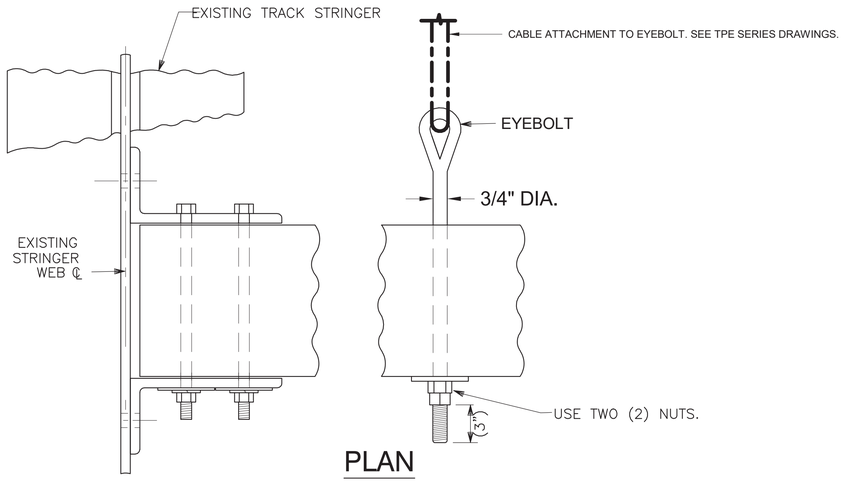

PLAN

DRAWING NOTES:

1. SEE DRAWING TPS1.00
2. ALL STEEL: ASTM A36
3. USE GALVANIZED ASTM A325 HIGH STRENGTH 3/4" DIA. BOLTS IN 13/16" HOLES FOR STRUCTURAL ATTACHMENT.
4. ALL HOLES MADE IN TRAIN CARRYING MEMBERS SHALL BE DRILLED FULL SIZE. BURNING AND REAMING OF HOLES IS NOT ALLOWED.
5. HOT DIP GALVANIZE ALL STEEL AFTER WELDING AND DRILLING, ASTM A123.
6. ALL TIMBER SHALL BE DENSE STRUCTURAL GRADE YELLOW PINE PRESSURE TREATED WITH AWPA TYPE P1(95) FOR CREO-PINE TO A NET RETENTION OF 8 LB/CU. FT. SUPPORT HARDWARE FOR TIMBER AND PORTION OF STRUCTURE COVERED BY SUPPORT HARDWARE SHALL BE PAINTED WITH ONE COAT OF RUSTPROOFING PAINT.
7. THROUGH BOLTS SHALL BE 3/4" A307 GALVANIZED UNLESS OTHERWISE NOTED.

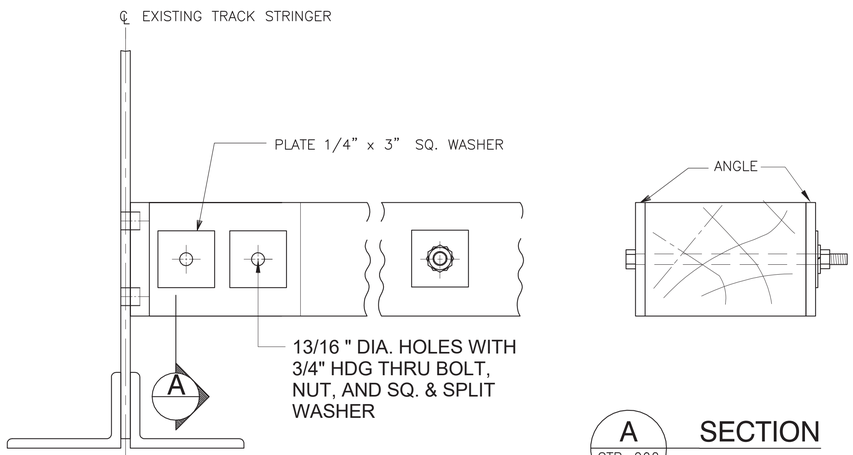

A / STP-202 SECTION

2 / STP-202 DETAIL OF CONNECTION AT WEB PLATE

1 CABLE DEAD-END DETAILS
12" = 1'-0"

DESIGN BY:									
DRAWN BY:									
CHECKED BY:									
APPROVED BY:			01/27/2020	ISSUE FOR BID	EAE	EAE	CMH		
CDOT/APPROVED BY:		NO.	DATE	REVISIONS	DES.	DRW.	CHK.	DCCO	CDOT

SIMPSON GUMPERTZ & HEGER
Engineering of Structures and Building Enclosures
Simpson Gumpertz & Heger Inc.
135 South LaSalle Street, Suite 3800
Chicago, Illinois 60603
main: 312.754.7500 fax: 312.754.7501
www.sgh.com

PERKINS+WILL
The Wrigley Building
410 North Michigan Ave.
Suite 1600
Chicago, IL 60611
t 312.755.0770
f 312.755.0775
www.perkinswill.com

CDOT
CHICAGO DEPARTMENT OF TRANSPORTATION
DIVISION OF ENGINEERING

154 N DAMEN AVE - DAMEN GREEN LINE STATION

TRACTION POWER - STANDARD STRUCTURAL DETAILS

CDOT PROJECT D-7-135 | DATE: 01/27/2020

SPEC. NO.

DRAWING NO. TPS1.05

REVISION NO.

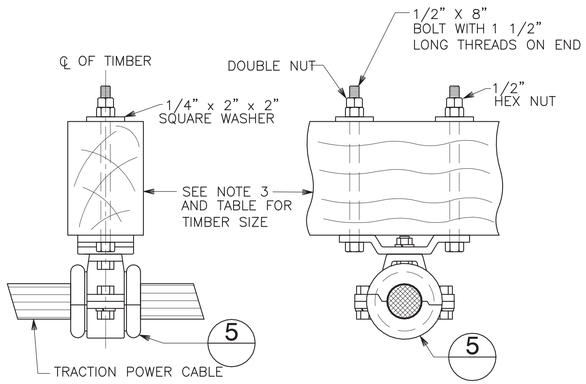

6 STP-210 DETAIL OF SPOOL TYPE INSULATOR CABLE SUPPORT

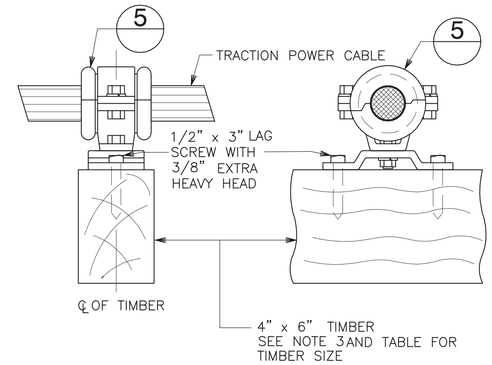

7 STP-210 DETAIL OF SPOOL TYPE INSULATOR CABLE SUPPORT

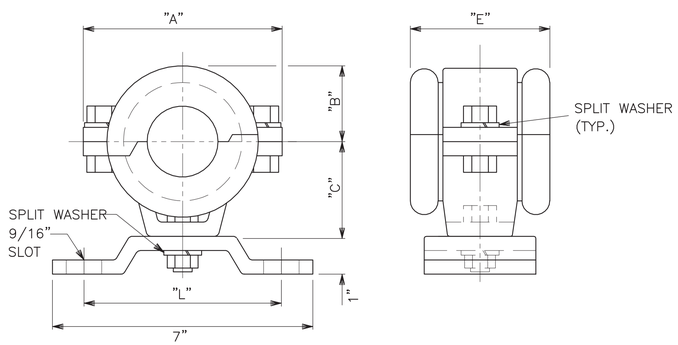

DELTA–STAR SPOOL INSULATOR CABLE SUPPORTS – TYPE "SSL"								
PORCELAIN SPOOLS CATALOG NUMBER	CABLE SIZE	CABLE DIAMETER	DIMENSIONS					
			"A"	"B"	"C"	"E"	"L"	
							MIN.	MAX.
350109	500KCMIL	1 1 4"	4 3/4"	1 3/4"	2 1/4"	3"	5"	5 3/4"
350115	1500KCMIL	2"	5 1/4"	2"	2 1/2"	3 3/4"	5"	5 3/4"

5 STP-210 DETAILS OF SPOOL INSULATOR

NOTES:

1. LUG ANGLE SHALL BE MOUNTED HORIZONTALLY FOR CROSS ARM SUPPORT WITH TIMBER MOUNTED ABOVE LUG ANGLE.
2. LOCATION OF HOLES DRILLED IN TRACK STRINGER FLANGE ANGLES FOR MOUNTING U–CLAMPS SHALL BE AS RECOMMENDED IN THE AMERICAN INSTITUTE OF STEEL CONSTRUCTION (LATEST EDITION).
3. ALL TIMBER SHALL BE DENSE STRUCTURAL GRADE YELLOW PINE PRESSURE TREATED WITH AWPA TYPE P1(95) FOR CREO–PINE TO A NET RETENTION OF 8 lb/cu. ft . SUPPORT HARDWARE FOR TIMBER AND PORTION OF STRUCTURE COVERED BY SUPPORT HARDWARE SHALL BE PAINTED WITH ONE COAT OF RUSTPROOFING PAINT.
4. ALL HOLES MADE IN TRAIN CARRYING MEMBERS SHALL BE DRILLED FULL SIZE. BURNING AND REAMING OF HOLES IS NOT ALLOWED.
5. USE GALVANIZED ASTM A325 HIGH STRENGTH 3/4" BOLTS IN 13/16" HOLES FOR STRUCTURAL ATTACHMENT.
6. ALL DIMENSIONS ARE IN MILLIMETERS UNLESS SHOWN OTHERWISE.
7. SEE DRAWING TPS1.00

DESIGN BY:									
DRAWN BY:									
CHECKED BY:									
APPROVED BY:			01/27/2020	ISSUE FOR BID	EAE	EAE	CMH		
CDOT/APPROVED BY:		NO.	DATE	REVISIONS	DES.	DRW.	CHK.	DCCO	CDOT

SIMPSON GUMPERTZ & HEGER
Engineering of Structures and Building Enclosures
Simpson Gumpertz & Heger Inc.
135 South LaSalle Street, Suite 3800
Chicago, Illinois 60603
main: 312.754.7500 fax: 312.754.7501
www.sgh.com

PERKINS+WILL
The Wrigley Building
410 North Michigan Ave.
Suite 1600
Chicago, IL 60611
t 312.755.0770
f 312.755.0775
www.perkinswill.com

CDOT
CHICAGO DEPARTMENT OF TRANSPORTATION
DIVISION OF ENGINEERING

154 N DAMEN AVE - DAMEN GREEN LINE STATION

TRACTION POWER - STANDARD STRUCTURAL DETAILS

CDOT PROJECT D-7-135 | DATE: 01/27/2020

SPEC. NO.

DRAWING NO. **TPS1.06**

REVISION NO.

NOTES:

1. SEE DRAWING TPS1.00
2. ELEVATION ABOVE GRADE AT LOWEST POINT ON CABLE TO BE NO LESS THAN 14'-6". CABLE SUPPORTS SHALL BE ABOVE 14'-6" OR ABOVE THE ELEVATION OF THE LOWEST POINT OF ADJACENT STRUCTURE.
3. ALL CABLES SHOWN INDICATIVELY ONLY. FOR CABLE DETAILS REFER TO ELECTRICAL DRAWINGS.
4. CONTRACTOR TO VERIFY ALL EXISTING WEB THICKNESSES ARE 1/2" MIN. UON.
5. SEE SHEET S21-31 FOR NEW BOLT HOLES IN EXISTING STRUCTURE.

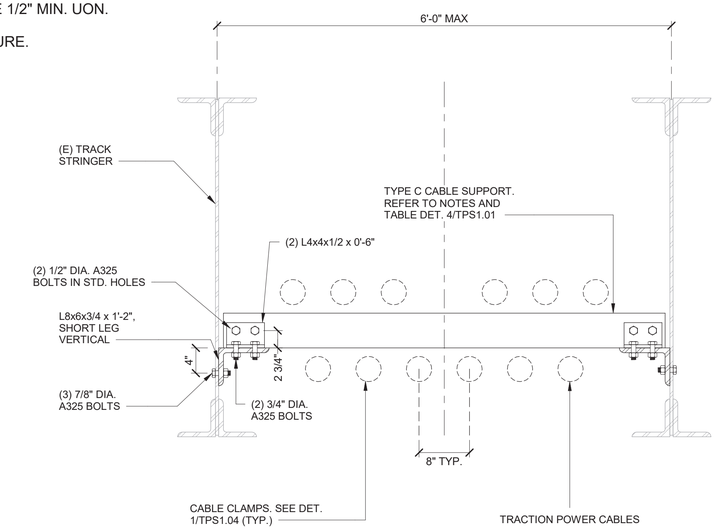

2 DETAIL OF 6x2 CABLE SUPPORT
1" = 1'-0"

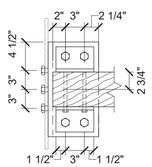

PLAN ON SUPPORT, TYP.

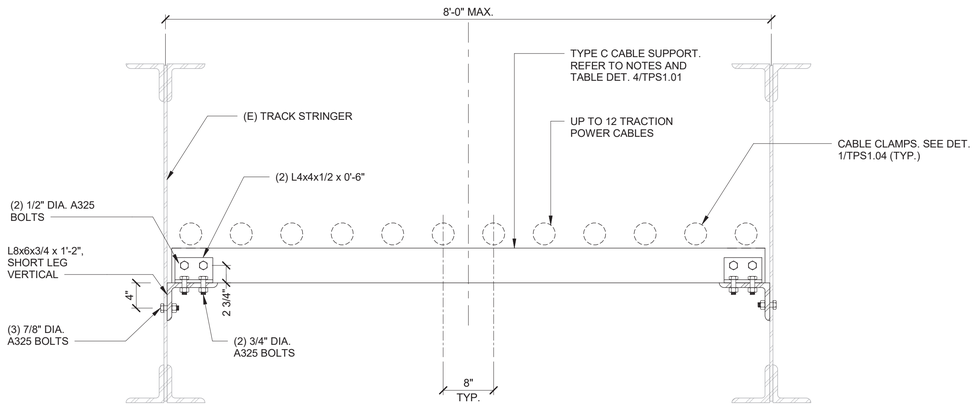

NOTES:

1. FROM BENT 32027 ONWARDS, THIS DETAIL IS USED AT EITHER THE TWO CENTRAL, OR ONE OUTER AND ONE INNER STRINGER IN ORDER TO PASS CABLES THROUGH THE OPENING AT EACH BENT LOCATION CREATED BY THE EXISTING CROSS BRACING.

1 DETAIL OF 12x1 CABLE WEB SUPPORT
1" = 1'-0"

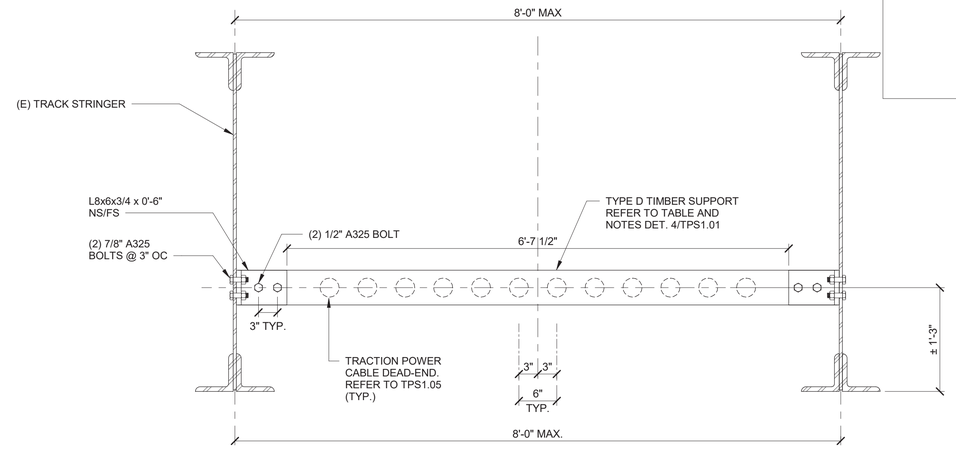

NOTE: PULLING LOADS SHALL NOT EXCEED 4,000 LBS

3 DETAIL OF 12x1 CABLE DEAD-END WEB SUPPORT
1" = 1'-0"

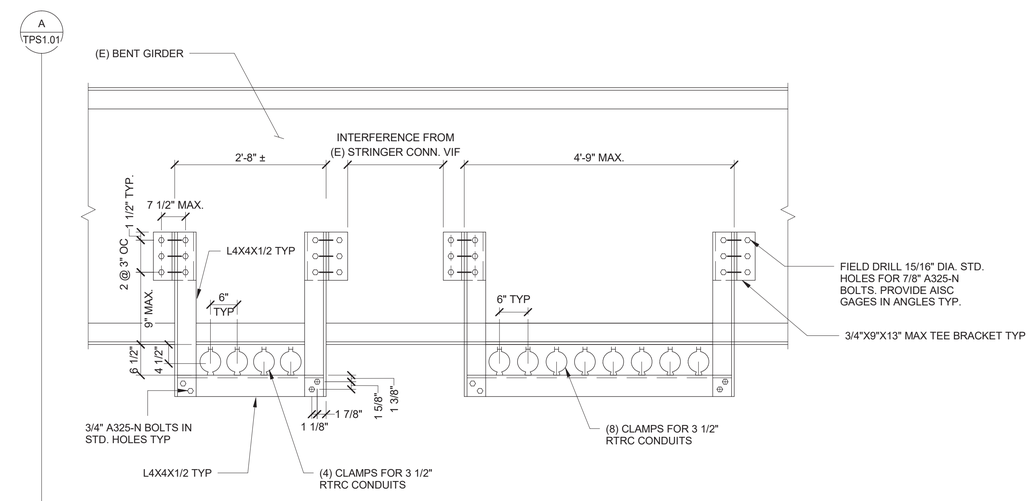

NOTES:
1. CONNECT NEW STEEL TO EXISTING CTA STRUCTURE WITH 7/8" H.S.BOLTS. ALL OTHER CONNECTIONS SHOULD BE MADE USING 3/4" H.S.BOLTS.
2. (E) STRINGERS TO BENT GIRDER CONNECTIONS, (E) BENT GIRDER STIFFENERS, (E) BENT GIRDER BRACING AND GUSSET NOT SHOWN FOR CLARITY. VIF ALL (E) CONSTRUCTION PRIOR TO ANY FABRICATION OR ERECTION.

4 CONDUIT SUPPORT AT BENT 32034
3/4" = 1'-0"

DESIGN BY:									
DRAWN BY:									
CHECKED BY:									
APPROVED BY:			01/27/2020	ISSUE FOR BID	EAE	EAE	CMH		
CDOT/APPROVED BY:		NO.	DATE	REVISIONS	DES.	DRW.	CHK.	DCCO	CDOT

SIMPSON GUMPERTZ & HEGER
Engineering of Structures and Building Enclosures
Simpson Gumpertz & Heger Inc.
135 South LaSalle Street, Suite 3800
Chicago, Illinois 60603
main: 312.754.7500 fax: 312.754.7501
www.sgh.com

PERKINS+WILL
The Wrigley Building
410 North Michigan Ave.
Suite 1600
Chicago, IL 60611
t 312.755.0770
f 312.755.0775
www.perkinswill.com

CDOT
CHICAGO DEPARTMENT OF TRANSPORTATION
DIVISION OF ENGINEERING

154 N DAMEN AVE - DAMEN GREEN LINE STATION

TRACTION POWER - CUSTOM STRUCTURAL DETAILS

CDOT PROJECT D-7-135 | DATE: 01/27/2020

SPEC. NO.

DRAWING NO. TPS1.11

REVISION NO.

NOTES:

1. SEE DRAWING TPS1.00
2. ELEVATION ABOVE GRADE AT LOWEST POINT ON CABLE TO BE NO LESS THAN 14'-6". CABLE SUPPORTS SHALL BE ABOVE 14'-6" OR ABOVE THE ELEVATION OF THE LOWEST POINT OF ADJACENT STRUCTURE.
3. ALL CABLES SHOWN INDICATIVELY ONLY. FOR CABLE DETAILS REFER TO ELECTRICAL DRAWINGS.
4. CONTRACTOR TO VERIFY ALL EXISTING WEB THICKNESSES ARE 1/2" MIN. UON.
5. SEE SHEET S21-31 FOR NEW BOLT HOLES IN EXISTING STRUCTURE.

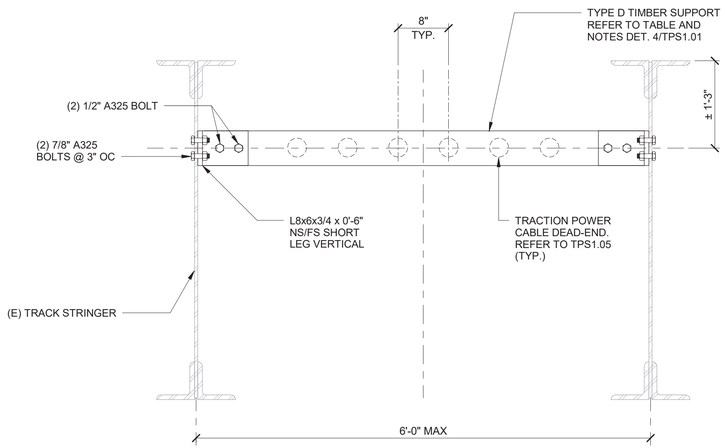

NOTE: PULLING LOADS SHALL NOT EXCEED 4,000 LBS

1 DETAIL OF 6x1 HI CABLE DEAD-END SUPPORT
1" = 1'-0"

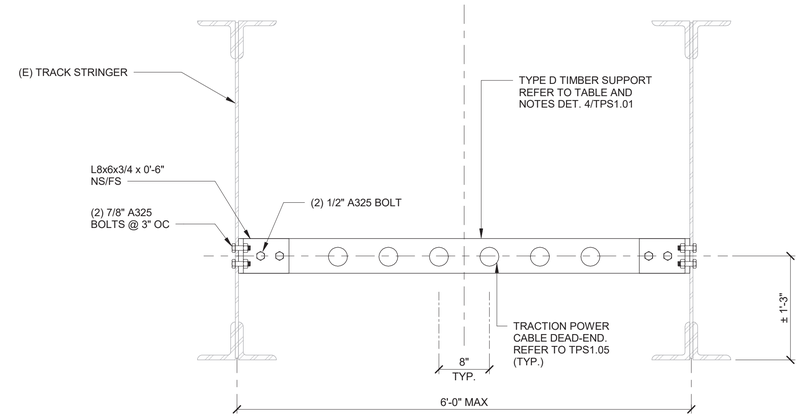

NOTE: PULLING LOADS SHALL NOT EXCEED 4,000 LBS

2 DETAIL OF 6x1 LO CABLE DEAD-END SUPPORT
1" = 1'-0"

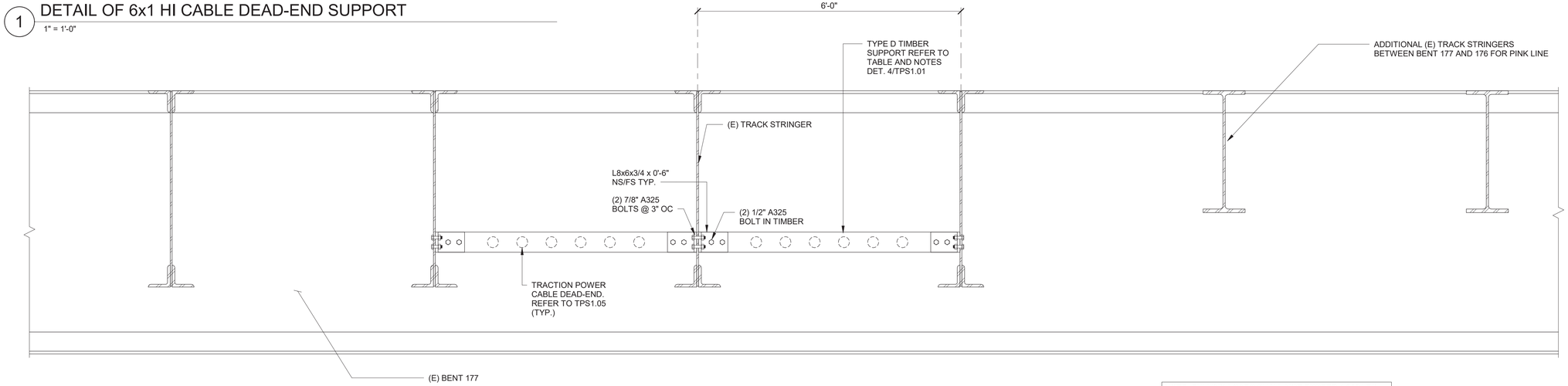

NOTE: PULLING LOADS SHALL NOT EXCEED 4,000 LBS

3 DETAIL OF (2) 6x1 CABLE DEAD-END SUPPORT EAST OF GREEN LINE BENT 176 LOOKING EAST
3/4" = 1'-0"

DESIGN BY:									
DRAWN BY:									
CHECKED BY:									
APPROVED BY:			01/27/2020	ISSUE FOR BID	EAE	EAE	CMH		
CDOT/APPROVED BY:		NO.	DATE	REVISIONS	DES.	DRW.	CHK.	DCCO	CDOT

SIMPSON GUMPERTZ & HEGER
Engineering of Structures and Building Enclosures
Simpson Gumpertz & Heger Inc.
135 South LaSalle Street, Suite 3800
Chicago, Illinois 60603
main: 312.754.7500 fax: 312.754.7501
www.sgh.com

PERKINS+WILL
The Wrigley Building
410 North Michigan Ave.
Suite 1600
Chicago, IL 60611
t 312.755.0770
f 312.755.0775
www.perkinswill.com

CDOT
CHICAGO DEPARTMENT OF TRANSPORTATION
DIVISION OF ENGINEERING

154 N DAMEN AVE - DAMEN GREEN LINE STATION

TRACTION POWER - CUSTOM STRUCTURAL DETAILS

CDOT PROJECT D-7-135 | DATE: 01/27/2020

SPEC. NO.

DRAWING NO. TPS1.12

REVISION NO.

NOTES:

1. SEE DRAWING TPS1.00
2. ELEVATION ABOVE GRADE AT LOWEST POINT ON CABLE TO BE NO LESS THAN 14'-6". CABLE SUPPORTS SHALL BE ABOVE 14'-6" OR ABOVE THE ELEVATION OF THE LOWEST POINT OF ADJACENT STRUCTURE.
3. ALL CABLES SHOWN INDICATIVELY ONLY. FOR CABLE DETAILS REFER TO ELECTRICAL DRAWINGS
4. CONTRACTOR TO VERIFY ALL EXISTING WEB THICKNESSES ARE 1/2" MIN. UON.
5. SEE SHEET S21-31 FOR NEW BOLT HOLES IN EXISTING STRUCTURE.

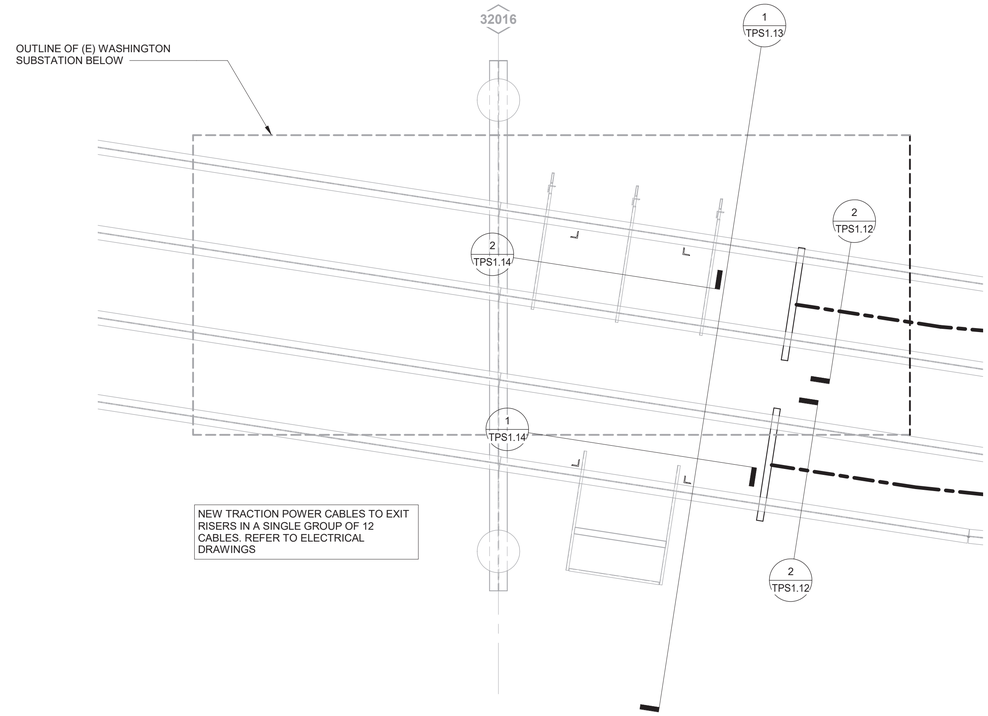

A PLAN AT EXISTING SUBSTATION
3/16" = 1'-0"

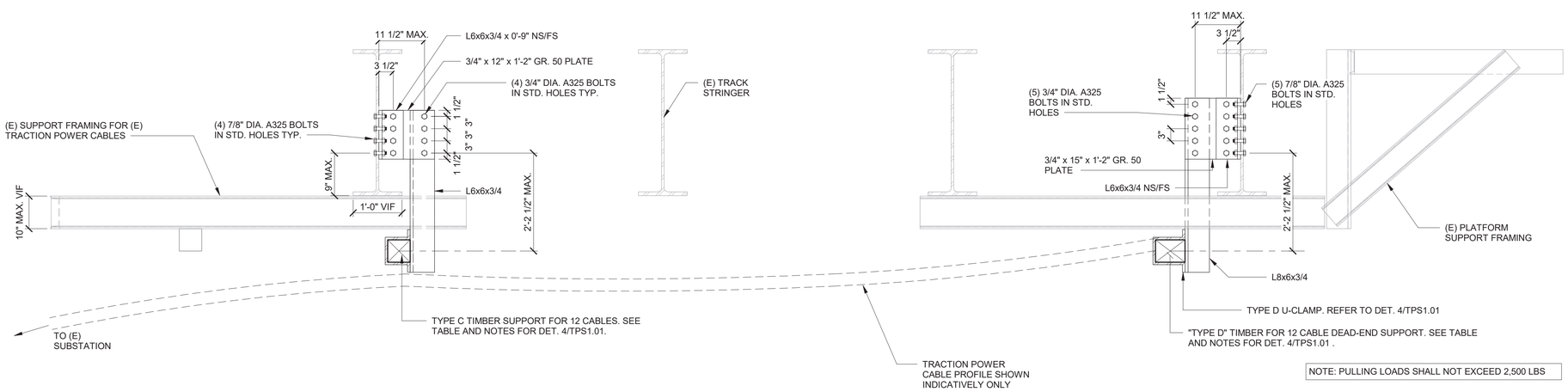

1 SECTION LOOKING SOUTH - EXISTING SUBSTATION
3/4" = 1'-0"

DESIGN BY:									
DRAWN BY:									
CHECKED BY:									
APPROVED BY:			01/27/2020	ISSUE FOR BID	EAE	EAE	CMH		
CDOT/APPROVED BY:		NO.	DATE	REVISIONS	DES.	DRW.	CHK.	DCCO	CDOT

SIMPSON GUMPERTZ & HEGER
Engineering of Structures and Building Enclosures
Simpson Gumpertz & Heger Inc.
135 South LaSalle Street, Suite 3800
Chicago, Illinois 60603
main: 312.754.7500 fax: 312.754.7501
www.sgh.com

PERKINS+WILL
The Wrigley Building
410 North Michigan Ave.
Suite 1600
Chicago, IL 60611
t 312.755.0770
f 312.755.0775
www.perkinswill.com

CDOT
CHICAGO DEPARTMENT OF TRANSPORTATION
DIVISION OF ENGINEERING

154 N DAMEN AVE - DAMEN GREEN LINE STATION

TRACTION POWER - CUSTOM STRUCTURAL DETAILS

CDOT PROJECT D-7-135 | DATE: 01/27/2020

SPEC. NO.

DRAWING NO. **TPS1.13**

REVISION NO.

NOTES:

1. SEE DRAWING TPS1.00
2. ELEVATION ABOVE GRADE AT LOWEST POINT ON CABLE TO BE NO LESS THAN 14'-6". CABLE SUPPORTS SHALL BE ABOVE 14'-6" OR ABOVE THE ELEVATION OF THE LOWEST POINT OF ADJACENT STRUCTURE.
3. ALL CABLES SHOWN INDICATIVELY ONLY. FOR CABLE DETAILS REFER TO ELECTRICAL DRAWINGS
4. REFER TO TPS1.13 FOR ADDITIONAL DETAIL
5. CONTRACTOR TO VERIFY ALL EXISTING WEB THICKNESSES ARE 1/2" MIN. UON.
6. SEE SHEET S21-31 FOR NEW BOLT HOLES IN EXISTING STRUCTURE.

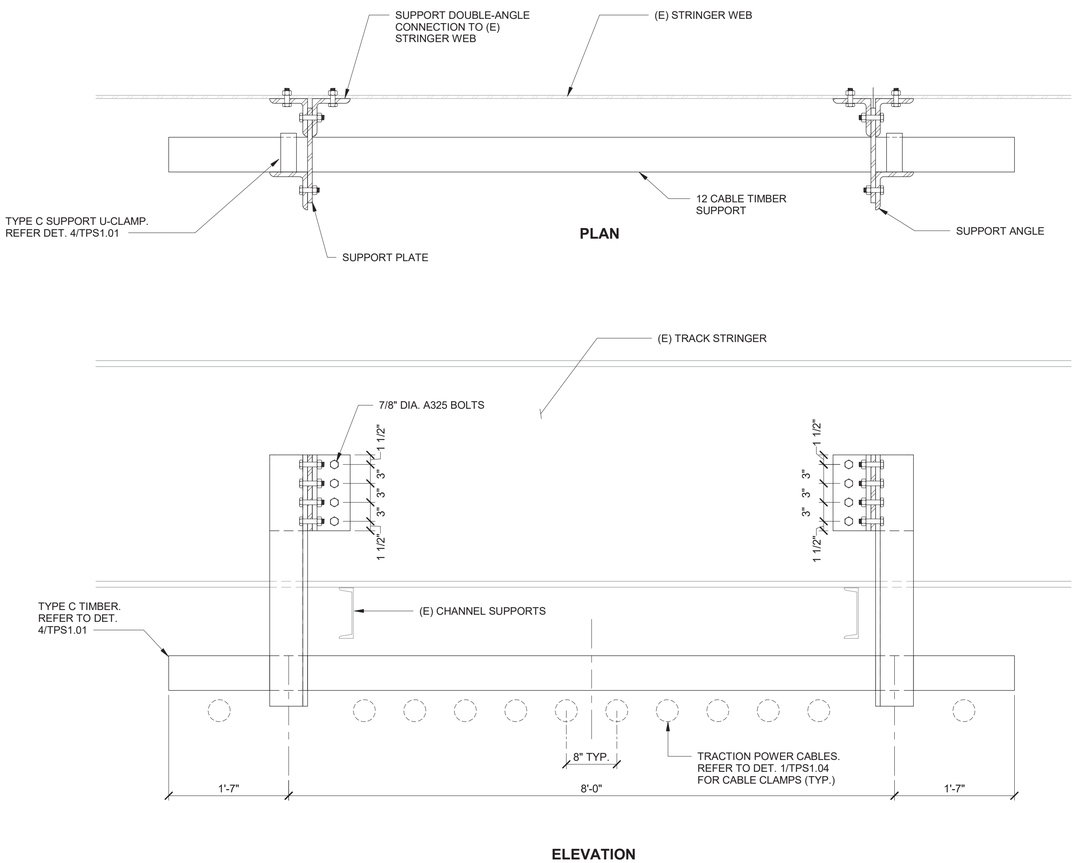

1 SECTION - NEW SUPPORT AT EXISTING SUBSTATION
1" = 1'-0"

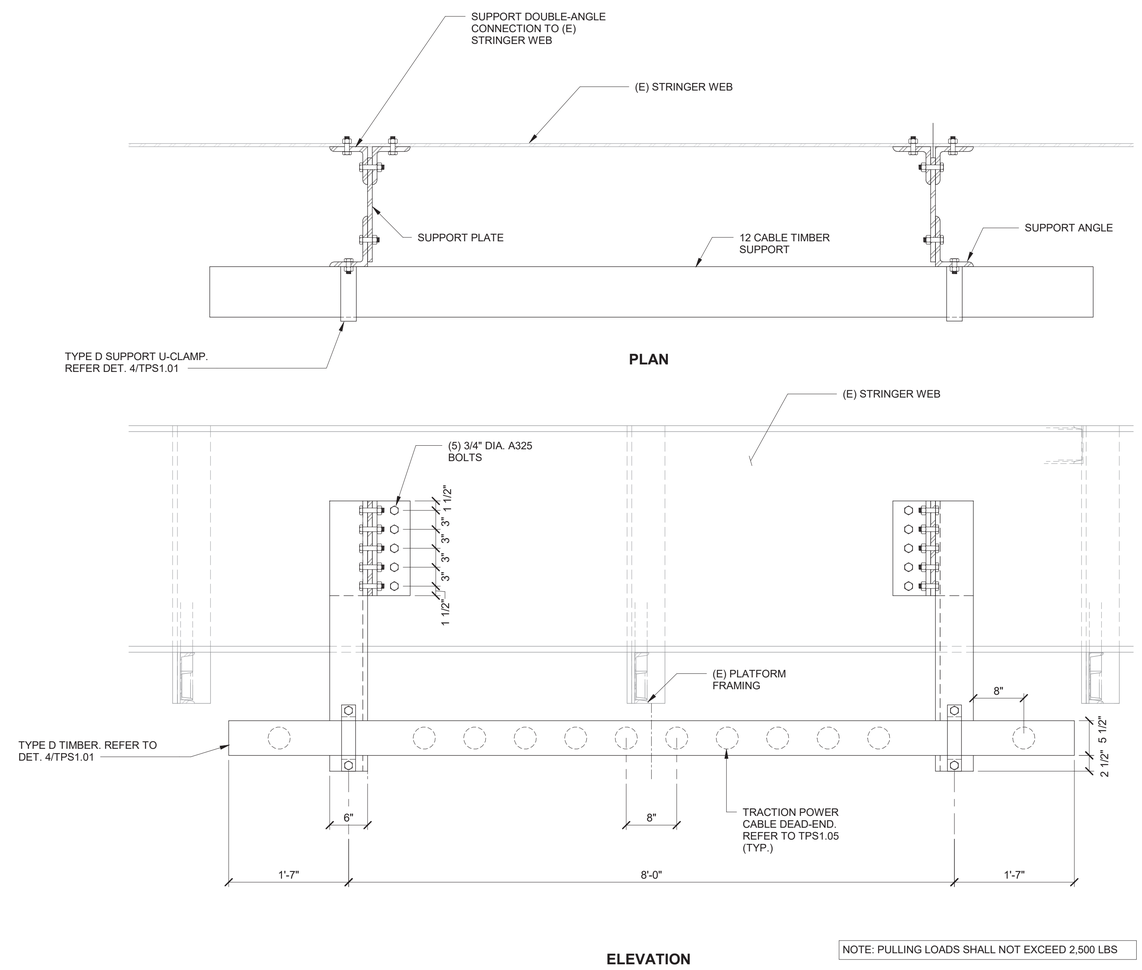

NOTE: PULLING LOADS SHALL NOT EXCEED 2,500 LBS

2 SECTION - NEW DEAD-END AT EXISTING SUBSTATION
1" = 1'-0"

DESIGN BY:									
DRAWN BY:									
CHECKED BY:									
APPROVED BY:			01/27/2020	ISSUE FOR BID	EAE	EAE	CMH		
CDOT/APPROVED BY:		NO.	DATE	REVISIONS	DES.	DRW.	CHK.	DCCO	CDOT

SIMPSON GUMPERTZ & HEGER
Engineering of Structures and Building Enclosures
Simpson Gumpertz & Heger Inc.
135 South LaSalle Street, Suite 3800
Chicago, Illinois 60603
main: 312.754.7500 fax: 312.754.7501
www.sgh.com

PERKINS+WILL
The Wrigley Building
410 North Michigan Ave.
Suite 1600
Chicago, IL 60611
t 312.755.0770
f 312.755.0775
www.perkinswill.com

CDOT
CHICAGO DEPARTMENT OF TRANSPORTATION
DIVISION OF ENGINEERING

154 N DAMEN AVE - DAMEN GREEN LINE STATION

TRACTION POWER - CUSTOM STRUCTURAL DETAILS

CDOT PROJECT D-7-135 | DATE: 01/27/2020

SPEC. NO.

DRAWING NO. **TPS1.14**

REVISION NO.

NOTES:

1. SEE DRAWING TPS1.00

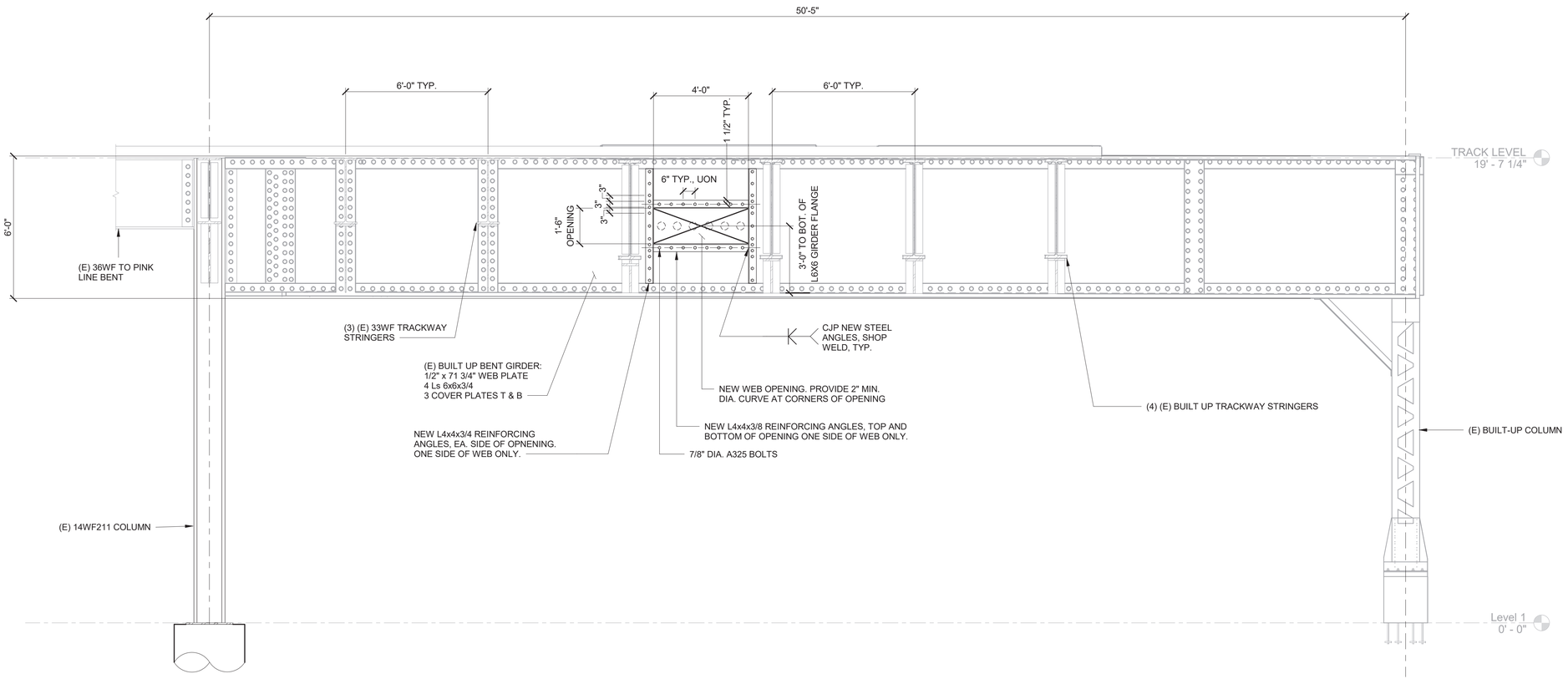

1 SECTION LOOKING WEST - GREENLINE BENT 177

3/8" = 1'-0"

DESIGN BY:									
DRAWN BY:									
CHECKED BY:									
APPROVED BY:			01/27/2020	ISSUE FOR BID	EAE	EAE	CMH		
CDOT/APPROVED BY:		NO.	DATE	REVISIONS	DES.	DRW.	CHK.	DCCO	CDOT

SIMPSON GUMPERTZ & HEGER
Engineering of Structures and Building Enclosures
Simpson Gumpertz & Heger Inc.
135 South LaSalle Street, Suite 3800
Chicago, Illinois 60603
main: 312.754.7500 fax: 312.754.7501
www.sgh.com

PERKINS+WILL
The Wrigley Building
410 North Michigan Ave.
Suite 1600
Chicago, IL 60611
t 312.755.0770
f 312.755.0775
www.perkinswill.com

CDOT
CHICAGO DEPARTMENT OF TRANSPORTATION
DIVISION OF ENGINEERING

154 N DAMEN AVE - DAMEN GREEN LINE STATION

TRACTION POWER - SECTION AT GREENLINE BENT 177

CDOT PROJECT D-7-135 | DATE: 01/27/2020

SPEC. NO.

DRAWING NO. **TPS2.01**

REVISION NO.