| TOTAL SHEETS | SHEET NO. |
|---|---|
| 1434 | 429 |

DRAWING NO. **GEN-99**

## STANDARD SYMBOLS

- FO — 9-1-1 FIBER OPTIC CABLE
- W — EXISTING WATER DISTRIBUTION
- G — PEOPLES GAS
- C — CITY ELECTRIC
- E — COMMONWEALTH EDISON
- T — TELEPHONE
- EXISTING SEWER
- CTV — CABLE TELEVISION
- A — CITY ELECTRIC (AERIAL)
- EXISTING BUILDING LINE

(NOTE: TOPOGRAPHIC SYMBOLS ARE FOR EXISTING FEATURES UNLESS OTHERWISE NOTED.)

- MANHOLE, EXISTING
- MANHOLE, PROPOSED
- FIRE HYDRANT
- LIGHT STANDARD
- BUFFALO BOX, WATER
- WATER METER BOX
- WATER VALVE VAULT
- BUFFALO BOX, GAS
- MANHOLE, GAS
- MANHOLE, CITY ELECTRIC
- MANHOLE, CITY ELECTRIC
- MANHOLE, COMMONWEALTH EDISON
- MANHOLE, TELEPHONE
- POWER POLE
- TRAFFIC SIGNAL
- TRAFFIC SIGNAL CONTROL BOX
- STREET LIGHTING CONTROL BOX
- INLET, EXISTING
- INLET, PROPOSED
- CATCH BASIN, EXISTING
- CATCH BASIN, PROPOSED
- CATCH BASIN TO BE FILLED/REMOVED
- ADJ CATCH BASIN TO BE ADJUSTED
- R CATCH BASIN TO BE RECONSTRUCTED
- ADJ SEWER MANHOLE TO BE REMOVED
- ADJ SEWER MANHOLE TO BE ADJUSTED
- R SEWER MANHOLE TO BE RECONSTRUCTED
- ADJ WATER VAULT TO BE ADJUSTED
- ADJ WATER METER TO BE ADJUSTED
- ADJ CITY ELECTRIC MANHOLE TO BE ADJUSTED
- ADJ CITY ELECTRIC HANDHOLE TO BE ADJUSTED
- TREE, EXISTING TO REMAIN
- TREE, EXISTING TO BE REMOVED
- BUSH OR SHRUB, EXISTING
- SOIL BORING
- ORDINANCE GRADE
- SIGN

# VOLUME 2 OF 4

**OUC EFP FILES:**

EFP-107977
EFP-108167
EFP-108168

PRIOR TO CONSTRUCTION, THE CONTRACTOR IS REQUIRED TO CALL D.I.G.G.E.R. AT 811 OR 312-744-7000 FOR UNDERGROUND UTILITY LOCATIONS.

# STATE OF ILLINOIS
# CITY OF CHICAGO
LORI E. LIGHTFOOT, MAYOR

# DEPARTMENT OF TRANSPORTATION
GIA BIAGI, COMMISSIONER

# DIVISION OF ENGINEERING
DANIEL BURKE, P.E., S.E. MANAGING DEPUTY COMMISSIONER

# CONTRACT PLANS
FOR

# JACKSON PARK MOBILITY IMPROVEMENTS

S. LAKE SHORE DRIVE (US 41) FROM E. HAYES DRIVE TO E. 57TH DRIVE
S. STONY ISLAND AVENUE FROM E. 64TH STREET TO E. 59TH STREET
S. CORNELL DRIVE FROM 6400 S TO E. HAYES DRIVE
E. HAYES DRIVE FROM S. CORNELL DRIVE TO S. LAKE SHORE DRIVE
E. 63RD STREET FROM S. STONY ISLAND AVENUE TO S. CORNELL DRIVE
MIDWAY PLAISANCE FROM S. STONY ISLAND AVENUE TO S. CORNELL DRIVE

| | |
|---|---|
| SECTION | 19-B7203-00-PV |
| STATE JOB NO. | C-88-001-20 |
| C.D.O.T. PROJECT NO. | B-7-203 |

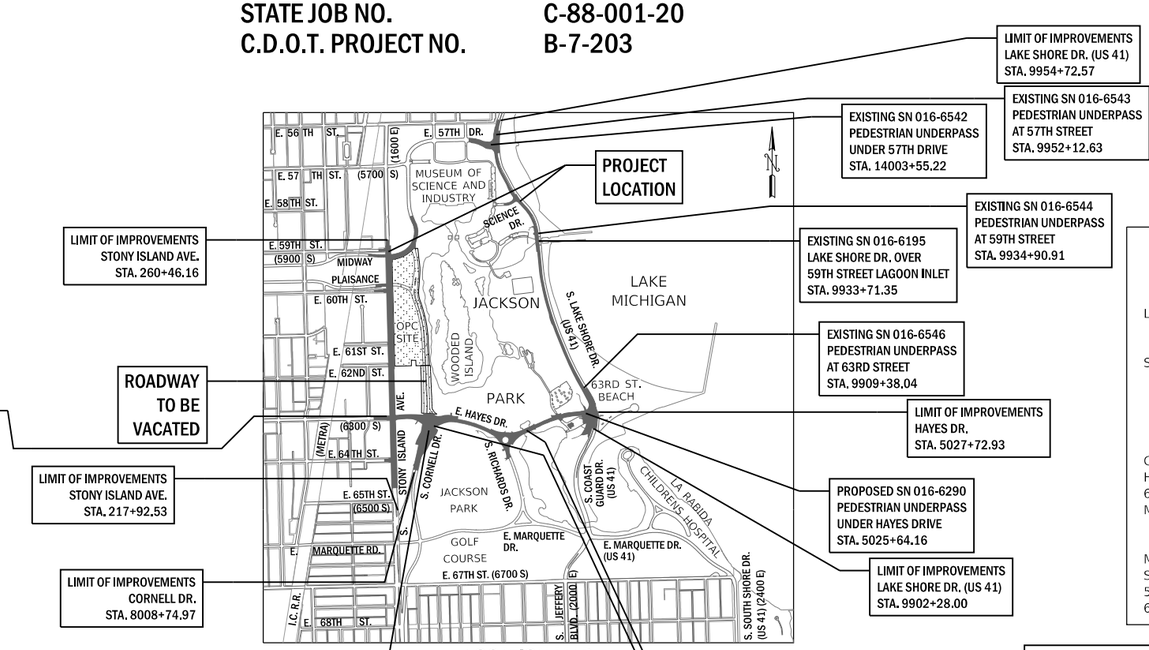


LOCATION MAP

GROSS LENGTH = 15817.73 FT. = 3.00 MILES
NET LENGTH = 15817.73 FT. = 3.00 MILES

1"= 100' 1"= 10' — 0 10' 20' 30' 100' 200' 300'
1"= 50' 1"= 5' — 0 5' 10' 50' 100'
1"= 40' — 0 50' 100'
1"= 30' — 0 50' 100'
1"= 20' — 0 50' 100'

FULL SIZE PLANS HAVE BEEN PREPARED USING STANDARD ENGINEERING SCALES. REDUCED SIZED PLANS WILL NOT CONFORM TO STANDARD SCALES. IN MAKING MEASUREMENTS ON REDUCED PLANS, THE ABOVE SCALES MAY BE USED.

## TRAFFIC DATA

| | AVERAGE DAILY TRAFFIC 2019 | AVERAGE DAILY TRAFFIC 2050 | SPEED LIMIT DESIGN | SPEED LIMIT POSTED |
|---|---|---|---|---|
| LAKE SHORE DRIVE | | | | |
| 57TH DR TO SCIENCE DR | 45,400 | 60,600 | 40 | 35 |
| SCIENCE DR TO HAYES DR | 46,300 | 60,600 | 40 | 35 |
| STONY ISLAND AVENUE | | | | |
| 59TH ST TO MP (N) | 14,700 | 13,500 | 30 | 30 |
| MP (N) TO MP (S) | 15,100 | 13,500 | 30 | 30 |
| MP (S) TO 60TH ST | 14,100 | 13,500 | 30 | 30 |
| 60TH ST TO 63RD ST | 13,800 | 17,200 | 30 | 30 |
| 63RD ST TO 64TH ST | 15,000 | 18,300 | 30 | 30 |
| CORNELL DRIVE | 22,100 | 14,100 | 35 | 30 |
| HAYES DRIVE | 12,600 | 23,100 | 35 | 30 |
| 63RD STREET | 11,500 | 17,600 | 35 | 30 |
| MIDWAY PLAISANCE (N) | | | | |
| W OF STONY ISLAND | 8,100 | 13,900 | 30 | 30 |
| E OF STONY ISLAND | 6,700 | 8,500 | 30 | 30 |
| MIDWAY PLAISANCE (S) | 7,400 | 7,200 | 30 | 30 |
| SCIENCE DRIVE | 800 | 800 | 30 | 30 |
| 57TH DRIVE | 32,900 | 24,800 | 30 | 30 |
| 64TH STREET | 3,300 | 3,700 | 30 | 30 |

DEPARTMENT OF PROCUREMENT SERVICES
MONICA JIMENEZ, FIRST DEPUTY PROCUREMENT OFFICER

C*NECT

## INDEX OF SHEETS

| DRAWING NO. | SHEET NO. | DESCRIPTION |
|---|---|---|
| VOLUME 1 | | |
| GENERAL SHEETS | | |
| 1 | GEN-1 | COVER |
| 2 | GEN-2 | SIGNATURE SHEET |
| 3 | GEN-3 | INDEX OF SHEETS AND STANDARDS |
| 4 TO 5 | GEN-4 TO GEN-5 | GENERAL NOTES |
| 5A | GEN-5A | DEEP FOUNDATION REVIEW PLAN |
| 6 TO 13 | GEN-6 TO GEN-13 | SUMMARY OF QUANTITIES |
| 14 TO 47 | GEN-14 TO GEN-47 | SCHEDULE OF QUANTITIES |
| 48 TO 57 | GEN-48 TO GEN-57 | ALIGNMENT PLAN |
| 58 TO 59 | GEN-58 TO GEN-59 | CONTROL POINTS AND TIES |
| 60 TO 63 | GEN-60 TO GEN-63 | BENCHMARKS |
| 64 TO 71 | GEN-64 TO GEN-71 | EXISTING BORING LOCATION PLAN |
| 72 | GEN-72 | PAVEMENT CORE SUMMARY |
| 73 TO 98 | GEN-73 TO GEN-98 | TYPICAL SECTIONS |
| MAINTENANCE OF TRAFFIC | | |
| 99 | MOT-1 | MAINTENANCE OF TRAFFIC GENERAL NOTES |
| 100 TO 107 | MOT-2 TO MOT-9 | MAINTENANCE OF TRAFFIC SUGGESTED SEQUENCE OF CONSTRUCTION |
| 108 TO 113 | MOT-10 TO MOT-15 | MAINTENANCE OF TRAFFIC TYPICAL SECTIONS |
| 114 TO 225 | MOT-16 TO MOT-127 | MAINTENANCE OF TRAFFIC PHASE AND STAGE PLANS |
| 226 TO 245 | MOT-128 TO MOT-147 | DETOUR ROUTES AND ALTERNATE ROUTES |
| 246 TO 252 | MOT-148 TO MOT-154 | PEDESTRIAN DETOUR ROUTES |
| 253 TO 257 | MOT-155 TO MOT-159 | MAINTENANCE OF TRAFFIC DETAILS |
| CIVIL | | |
| 258 | C-1 | ROADWAY PLAN - EXISTING & PROPOSED CONDITIONS - LEGENDS AND NOTES |
| 259 | C-2 | ROADWAY PLAN - EXISTING & PROPOSED CONDITIONS - KEY PLAN |
| 260 TO 323 | C-3 TO C-66 | ROADWAY PLAN - EXISTING & PROPOSED CONDITIONS |
| 324 TO 339 | C-67 TO C-82 | ROADWAY PROFILES |
| 340 TO 345 | C-83 TO C-88 | PATH PROFILES |
| 346 TO 361 | C-89 TO C-104 | JOINTING DETAILS |
| 362 TO 380 | C-105 TO C-123 | ADA CURB RAMP DETAILS |
| 381 TO 393 | C-124 TO C-136 | GRADING DETAILS |
| 394 TO 428 | C-137 TO C-171 | CIVIL DETAILS |
| VOLUME 2 | | |
| GENERAL SHEETS | | |
| 429 | GEN-99 | COVER |
| 430 | GEN-100 | INDEX OF SHEETS VOLUME 2 |
| DRAINAGE AND UTILITIES | | |
| 431 TO 504 | DRN-1 TO DRN-74 | DRAINAGE PLAN EXISTING & PROPOSED CONDITIONS |
| 505 TO 515 | DRN-75 TO DRN-85 | DRAINAGE PROFILES |
| 516 TO 543 | DD-1 TO DD-28 | DRAINAGE DETAILS |
| PUMP STATIONS | | |
| 544 TO 566 | PS-1 TO PS-23 | PUMP STATION PLANS |
| EROSION CONTROL PLAN | | |
| 567 | EC-1 | EROSION CONTROL PLAN - EROSION CONTROL NOTES |
| 568 TO 603 | EC-2 TO EC-37 | EROSION CONTROL PLAN |
| LANDSCAPING PLAN | | |
| 604 TO 642 | LS-1 TO LS-37 | LANDSCAPING PLAN - TREE REMOVAL AND PROTECTION |
| 641 | LS-38 | LANDSCAPING PLAN - TREE PROTECTION DETAILS |
| 642 TO 656 | LS-39 TO LS-53 | LANDSCAPING PLAN - PROPOSED PLANTING |
| 657 | LS-54 | LANDSCAPING PLAN - TREE PLANTING DETAILS |
| 658 | LS-55 | LANDSCAPING PLAN - TREE GRATE PLANTING DETAILS |
| 659 | LS-56 | LANDSCAPING PLAN - IRRIGATION DETAILS |
| WATER MAIN | | |
| 660 | WM-1 | WATER MAIN REPLACEMENT - KEY PLAN |
| 661 TO 674 | WM-2 TO WM-15 | WATER MAIN REPLACEMENT PLAN AND PROFILE |
| 675 TO 689 | WM-16 TO WM-30 | WATER MAIN REPLACEMENT CDWM WATER MAIN DETAILS |
| PAVEMENT MARKING AND SIGNING | | |
| 690 | PMK-1 | PAVEMENT MARKING AND SIGNING - KEY PLAN |
| 691 TO 758 | PMK-2 TO PMK-69 | PAVEMENT MARKING AND SIGNING - EXISTING & PROPOSED CONDITIONS |
| 759 TO 760 | PMK-70 TO PMK-71 | PAVEMENT MARKING AND SIGNING - SIGNING DETAILS |
| 761 TO 764 | PMK-72 TO PMK-75 | PAVEMENT MARKING AND SIGNING - PAVEMENT MARKING DETAILS |

## INDEX OF SHEETS (CONTINUED)

| DRAWING NO. | SHEET NO. | DESCRIPTION |
|---|---|---|
| VOLUME 3 | | |
| GENERAL SHEETS | | |
| 765 | GEN-101 | COVER |
| 766 | GEN-102 | INDEX OF SHEETS VOLUME 3 |
| STRUCTURAL | | |
| 767 TO 782 | SA-1 TO SA-16 | RETAINING WALL C (STRUCTURE NO. 016-6542) |
| 783 TO 817 | SAX-1 TO SAX-35 | EXISTING PLANS FOR STRUCTURE NO. 016-6542 |
| 818 TO 829 | SB-1 TO SB-12 | BARRIER MODIFICATIONS (STRUCTURE NO. 016-6543) |
| 830 TO 844 | SBX-1 TO SBX-15 | EXISTING PLANS FOR STRUCTURE NO. 016-6543 |
| 845 TO 862 | SC-1 TO SC-18 | PEDESTRIAN UNDERPASS WIDENING (STRUCTURE NO. 016-6544) |
| 863 TO 907 | SCX-1 TO SCX-45 | EXISTING PLANS FOR STRUCTURE NO. 016-6544 |
| 908 TO 937 | SD-1 TO SD-30 | STRUCTURE NO. 016-6195 |
| 938 TO 975 | SDX-1 TO SDX-38 | EXISTING PLANS FOR STRUCTURE NO. 016-6195 |
| 976 TO 995 | SE-1 TO SE-20 | STRUCTURE NO. 016-6546 |
| 996 TO 1045 | SEX-1 TO SEX-50 | EXISTING PLANS FOR STRUCTURE NO. 016-6546 |
| 1046 TO 1076 | SF-1 TO SF-31 | STRUCTURE NO. 016-6290 |
| 1077 TO 1084 | SG-1 TO SG-8 | STRUCTURE NO. 016-6196 |
| 1085 TO 1087 | SGX-1 TO SGX-3 | EXISTING PLANS FOR STRUCTURE NO. 016-6196 |
| 1088 TO 1117 | SH-1 TO SH-30 | STRUCTURE NO. 016-6291 |
| 1118 TO 1151 | SI-1 TO SI-34 | STRUCTURE NO. 016-6250 |
| 1152 TO 1156 | SJ-1 TO SJ-5 | CUT-OFF WALL DETAILS |
| VOLUME 4 | | |
| GENERAL SHEETS | | |
| 1157 | GEN-103 | COVER |
| 1158 | GEN-104 | INDEX OF SHEETS VOLUME 4 |
| TRAFFIC SIGNALS | | |
| 1159 TO 1176 | TCS-1 TO TCS-18 | TRAFFIC CONTROL SIGNALS |
| 1177 TO 1186 | TST-1 TO TST-10 | TRAFFIC SIGNAL TIMING SCHEDULES |
| ELECTRICAL | | |
| 1187 | E-1 | CDOT STANDARD CODES FOR TRAFFIC SIGNALS AND STREET LIGHTING |
| 1188 TO 1212 | E-2 TO E-26 | LIGHTING AND ELECTRICAL UNDERGROUND CONDUIT FACILITIES |
| 1213 TO 1235 | E-27 TO E-49 | CDOT ARTERIAL LIGHTING INSTALLATION PLAN |
| 1236 TO 1261 | E-50 TO E-75 | CDOT ARTERIAL LIGHTING REMOVAL PLAN |
| 1262 TO 1264 | E-76 TO E-78 | CPD ELECTRICAL INSTALLATION PLAN |
| 1265 TO 1276 | E-79 TO E-90 | CPD ORNAMENTAL LIGHTING INSTALLATION PLAN |
| 1277 TO 1279 | E-91 TO E-93 | CPD ELECTRICAL REMOVAL PLAN |
| 1280 TO 1287 | E-94 TO E-101 | CPD ORNAMENTAL LIGHTING REMOVAL PLAN |
| 1288 | E-102 | CPD UNDERPASS LIGHTING - INSTALLATION & REMOVAL PLAN - 59TH ST. UNDERPASS |
| 1289 | E-103 | CPD UNDERPASS LIGHTING - INSTALLATION & REMOVAL PLAN - 59TH INLET UNDERPASS |
| 1290 | E-104 | CPD UNDERPASS LIGHTING - INSTALLATION & REMOVAL PLAN - 63RD ST. UNDERPASS |
| 1291 | E-105 | CPD UNDERPASS LIGHTING - INSTALLATION PLAN - CORNELL DR. UNDERPASS |
| 1292 | E-106 | CPD UNDERPASS LIGHTING - INSTALLATION PLAN - HAYES DR. UNDERPASS |
| 1293 | E-107 | CPD UNDERPASS LIGHTING - INSTALLATION PLAN - HAYES DR. UNDERPASS |
| 1294 TO 1295 | E-108 TO E-109 | CPD ELECTRICAL UPGRADES |
| 1296 | E-110 | MSI ORNAMENTAL LIGHTING REMOVAL PLAN |
| 1297 | E-111 | MSI ORNAMENTAL LIGHTING INSTALLATION PLAN |
| 1298 TO 1302 | E-112 TO E-116 | IDOT ELECTRICAL INSTALLATION PLAN |
| 1303 TO 1307 | E-117 TO E-121 | IDOT ELECTRICAL REMOVAL PLAN |
| 1308 TO 1324 | E-122 TO E-138 | CDOT ELECTRICAL DETAILS |
| 1325 | E-139 | CPD/MSI ELECTRICAL DETAILS |
| 1326 TO 1327 | E-140 TO E-141 | CPD ELECTRICAL DETAILS |
| 1328 | E-142 | MSI ELECTRICAL DETAILS |
| 1329 | E-143 | ELECTRICAL DETAILS |
| CROSS SECTIONS | | |
| 1330 TO 1353 | XS-1 TO XS-24 | CROSS SECTIONS - S. STONY ISLAND AVE. |
| 1354 TO 1359 | XS-25 TO XS-30 | CROSS SECTIONS - MIDWAY PLAISANCE (N) |
| 1360 TO 1365 | XS-31 TO XS-36 | CROSS SECTIONS - E. 63RD ST. |
| 1366 TO 1371 | XS-37 TO XS-42 | CROSS SECTIONS - S. CORNELL DR. |
| 1372 TO 1390 | XS-43 TO XS-61 | CROSS SECTIONS - E. HAYES DR. |
| 1391 TO 1393 | XS-62 TO XS-65 | CROSS SECTIONS - S. RICHARDS DR. |
| 1394 TO 1427 | XS-66 TO XS-98 | CROSS SECTIONS - S. LAKE SHORE DR. |
| 1428 TO 1434 | XS-99 TO XS-105 | CROSS SECTIONS - CPD PATHS |

PLOT DATE: 2/15/2021
PLOT SCALE: 40.0000 ' / in.
FILE NAME: pw:\cdot-pw-int.bentley.com:CDOT-PW-INT\Documents\Projects\3153\CAD\Sheets\GeneralUtil-Index2.dgn

| | | | | |
|---|---|---|---|---|
| DESIGN: MPK | | | | |
| DRAWN: MPK | | | | |
| CHECKED: KS | | | | |
| APPROVED: | NO. | BY | DATE | DESCRIPTION |
| DATE: 01/22/2021 | REVISIONS | | | |

CDOT CHICAGO DEPARTMENT OF TRANSPORTATION

C*NECT

**INDEX OF SHEETS VOLUME 2**

**JACKSON PARK MOBILITY IMPROVEMENTS**

STA. TO STA.

| | |
|---|---|
| CONTRACT NO. - | TOTAL SHEETS 1434 / SHEET NO. 430 |
| PROJECT NO. B-7-203 | DRAWING NO. GEN-100 |
| SCALE: NONE | |

## EXISTING CONDITIONS

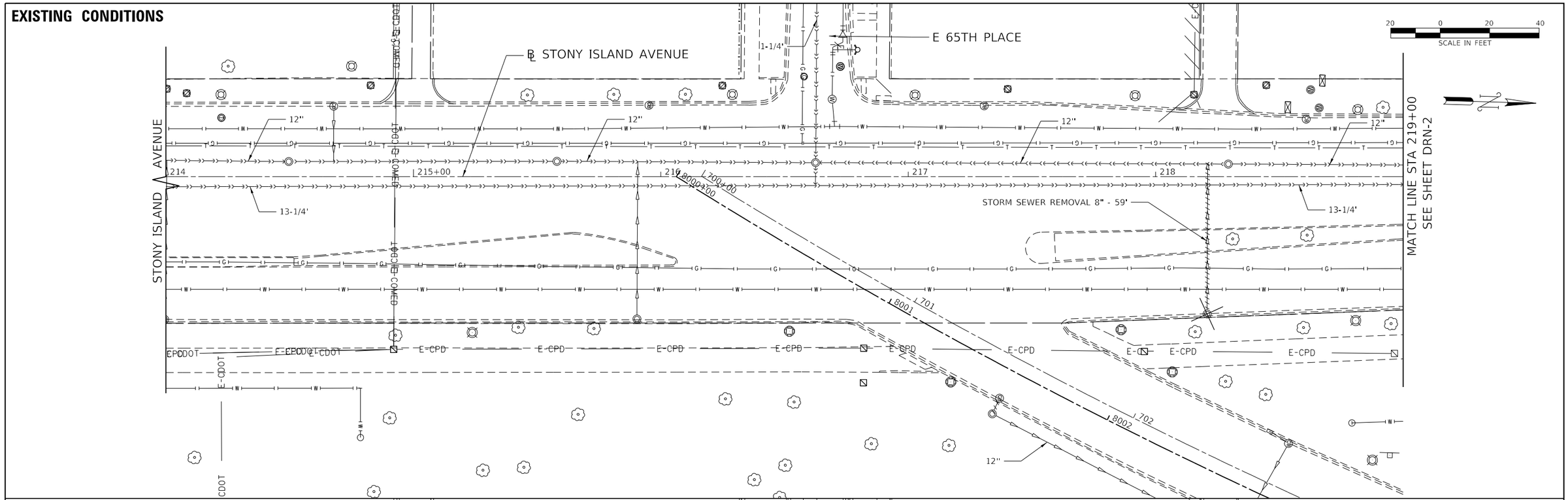


## PROPOSED CONDITIONS

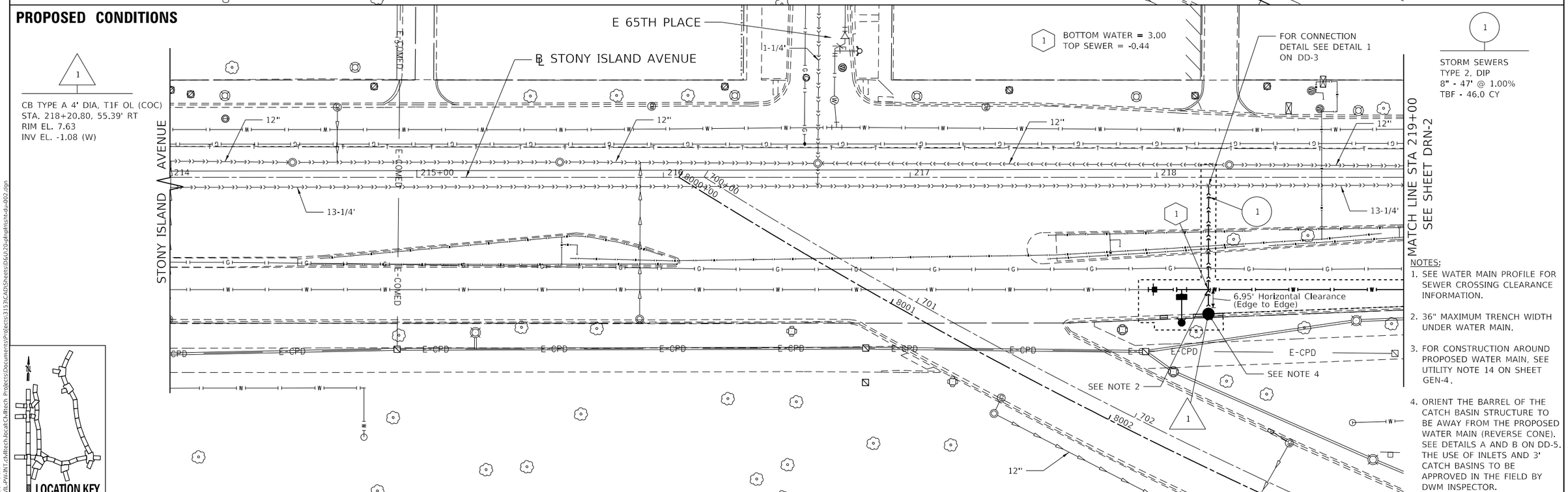


1

CB TYPE A 4' DIA, T1F OL (COC)
STA. 218+20.80, 55.39' RT
RIM EL. 7.63
INV EL. -1.08 (W)

1

STORM SEWERS
TYPE 2, DIP
8" - 47' @ 1.00%
TBF - 46.0 CY

NOTES:

1. SEE WATER MAIN PROFILE FOR SEWER CROSSING CLEARANCE INFORMATION.
2. 36" MAXIMUM TRENCH WIDTH UNDER WATER MAIN.
3. FOR CONSTRUCTION AROUND PROPOSED WATER MAIN, SEE UTILITY NOTE 14 ON SHEET GEN-4.
4. ORIENT THE BARREL OF THE CATCH BASIN STRUCTURE TO BE AWAY FROM THE PROPOSED WATER MAIN (REVERSE CONE). SEE DETAILS A AND B ON DD-5. THE USE OF INLETS AND 3' CATCH BASINS TO BE APPROVED IN THE FIELD BY DWM INSPECTOR.



LOCATION KEY

| | | | | |
|---|---|---|---|---|
| DESIGN: MSA | | | $REV3 | |
| DRAWN: MSA | | | $REV2 | |
| CHECKED: TKL | | | $REV1 | |
| APPROVED: | NO. | BY | DATE | DESCRIPTION |
| DATE: 01/22/2021 | REVISIONS | | | |

CDOT CHICAGO DEPARTMENT OF TRANSPORTATION

C*NECT

DRAINAGE PLAN
EXISTING & PROPOSED CONDITIONS
S. STONY ISLAND AVE.

JACKSON PARK MOBILITY IMPROVEMENTS

STA. 214+00 TO STA. 219+00

| | | |
|---|---|---|
| CONTRACT NO. - | TOTAL SHEETS 1434 | SHEET NO. 431 |
| PROJECT NO. B-7-203 | DRAWING NO. DRN-1 | |
| SCALE: 1"=20' | | |

PLOT DATE: 5/17/2021
PLOT SCALE: 40.0000 ' / in.
FILE NAME: pw:\\CIVIL-PW-INT.civiltech.local:Civiltech Projects\Documents\Projects\3153\CAD\Sheets\D&U\20-plnpln\sht-du-002.dgn

## EXISTING CONDITIONS

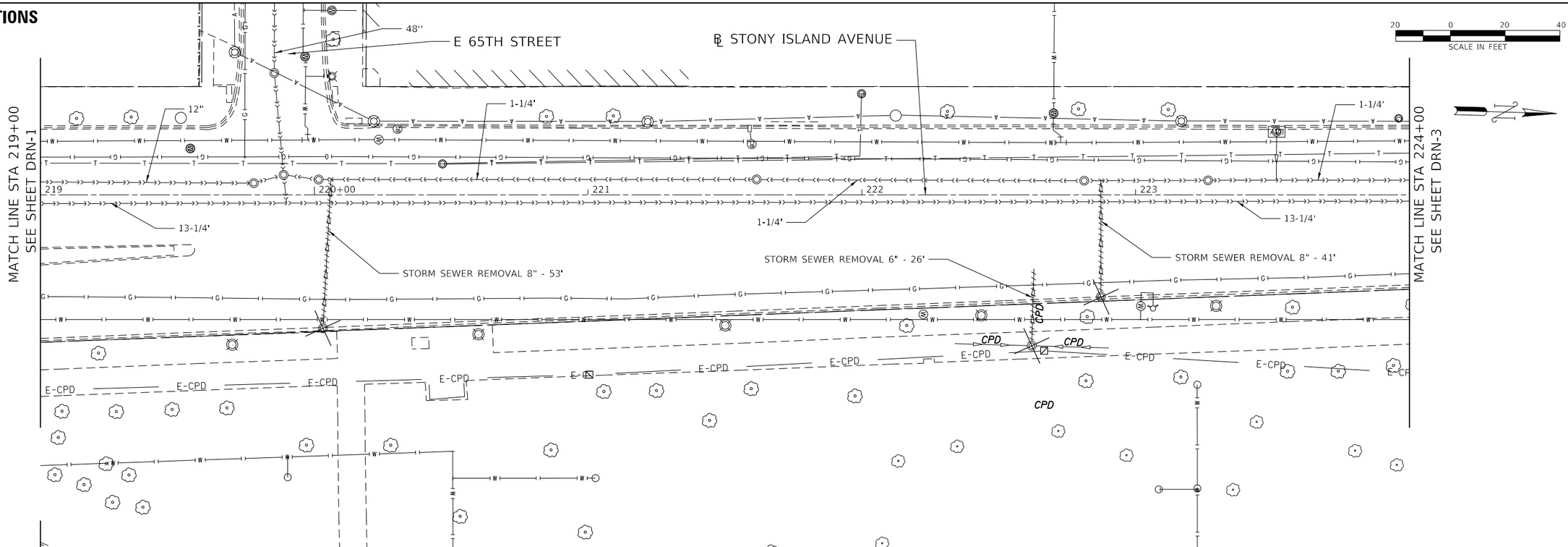


## PROPOSED CONDITIONS

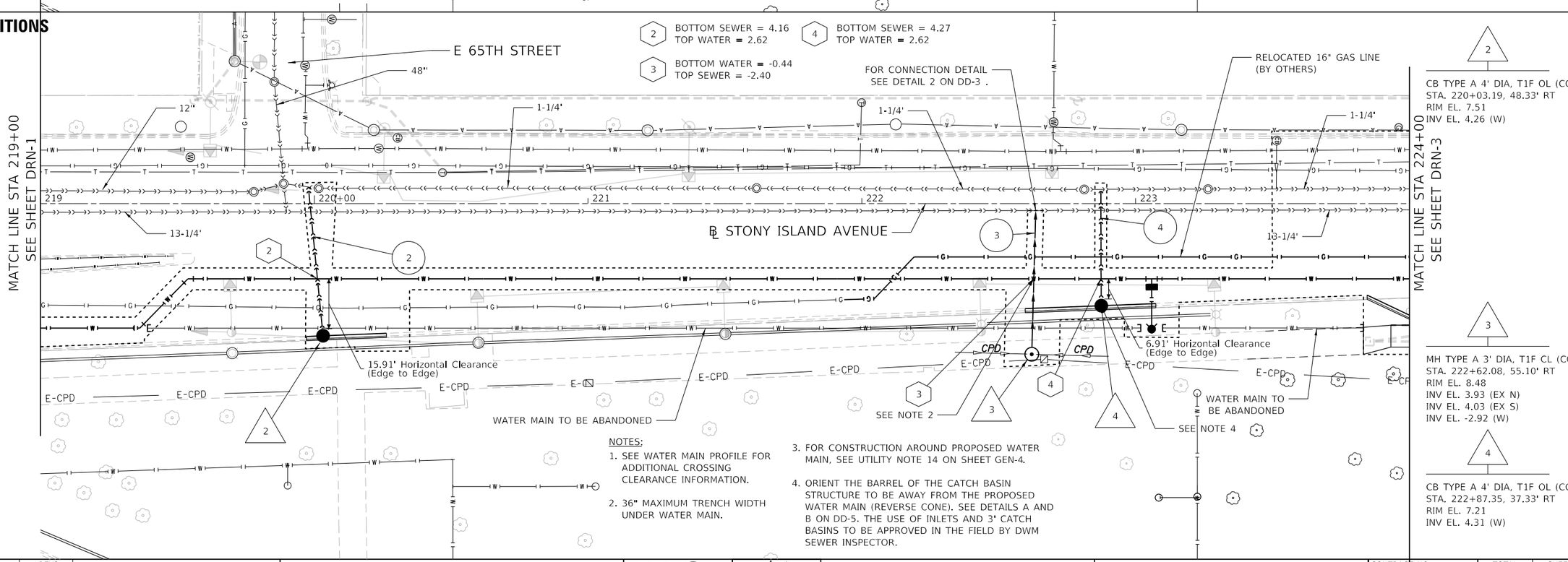


NOTES:

1. SEE WATER MAIN PROFILE FOR ADDITIONAL CROSSING CLEARANCE INFORMATION.
2. 36" MAXIMUM TRENCH WIDTH UNDER WATER MAIN.
3. FOR CONSTRUCTION AROUND PROPOSED WATER MAIN, SEE UTILITY NOTE 14 ON SHEET GEN-4.
4. ORIENT THE BARREL OF THE CATCH BASIN STRUCTURE TO BE AWAY FROM THE PROPOSED WATER MAIN (REVERSE CONE). SEE DETAILS A AND B ON DD-5. THE USE OF INLETS AND 3' CATCH BASINS TO BE APPROVED IN THE FIELD BY DWM SEWER INSPECTOR.

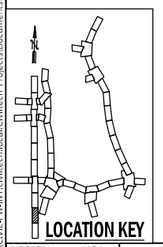


| DESIGN: MSA | | | | |
|---|---|---|---|---|
| DRAWN: MSA | | | | |
| CHECKED: TKL | | | | |
| APPROVED: | NO. | BY | DATE | DESCRIPTION |
| DATE: 01/22/2021 | REVISIONS | | | |

| | | | |
|---|---|---|---|
| ▵REV3 | | | |
| ▵REV2 | | | |
| ▵REV1 | | | |

CDOT CHICAGO DEPARTMENT OF TRANSPORTATION

C*NECT

**DRAINAGE PLAN**
**EXISTING & PROPOSED CONDITIONS**
**S. STONY ISLAND AVE.**

**JACKSON PARK MOBILITY IMPROVEMENTS**

STA. 219+00 TO STA. 224+00

| CONTRACT NO. - | TOTAL SHEETS | SHEET NO. |
|---|---|---|
| PROJECT NO. B-7-203 | 1434 | 432 |
| SCALE: 1"=20' | DRAWING NO. DRN-2 | |

PLOT DATE: 5/17/2021
PLOT SCALE: 40.0000 ' / in.
FILE NAME: pw:\\CIVIL-PW-NT-cdot.tech.local:CivilTech Projects:Documents\Projects\31537\CADD\Sheets\DRAIN\DRN-dp.dgn

## EXISTING CONDITIONS

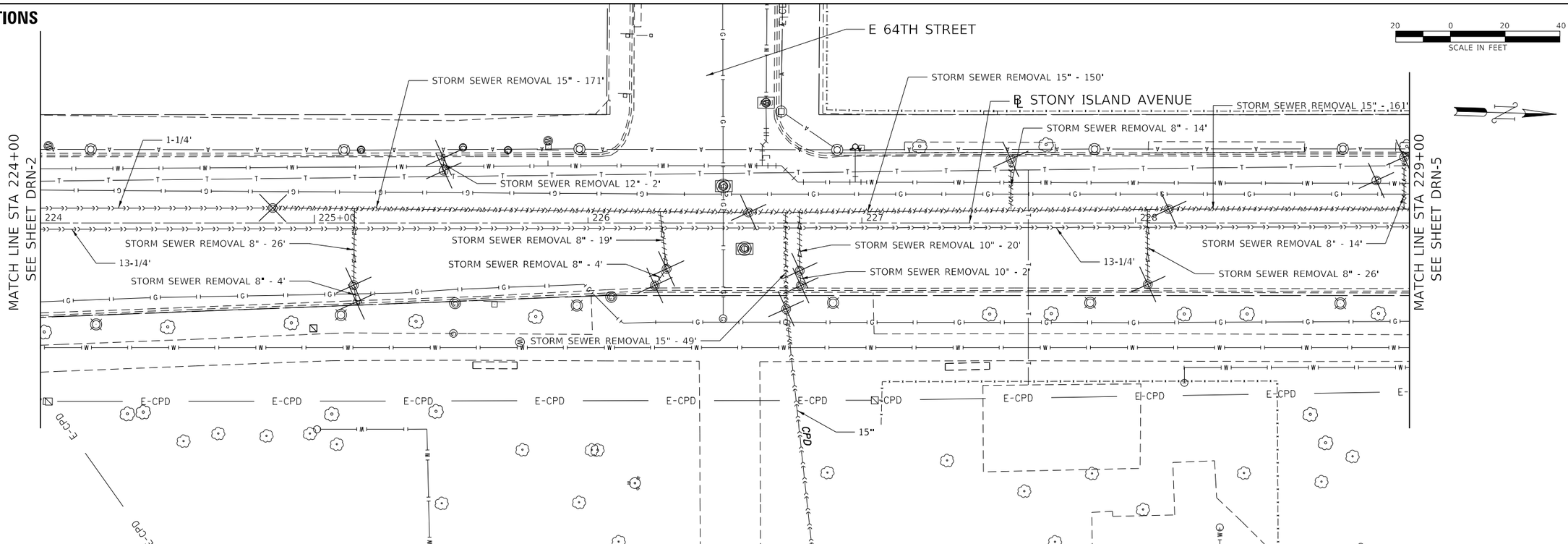


## PROPOSED CONDITIONS

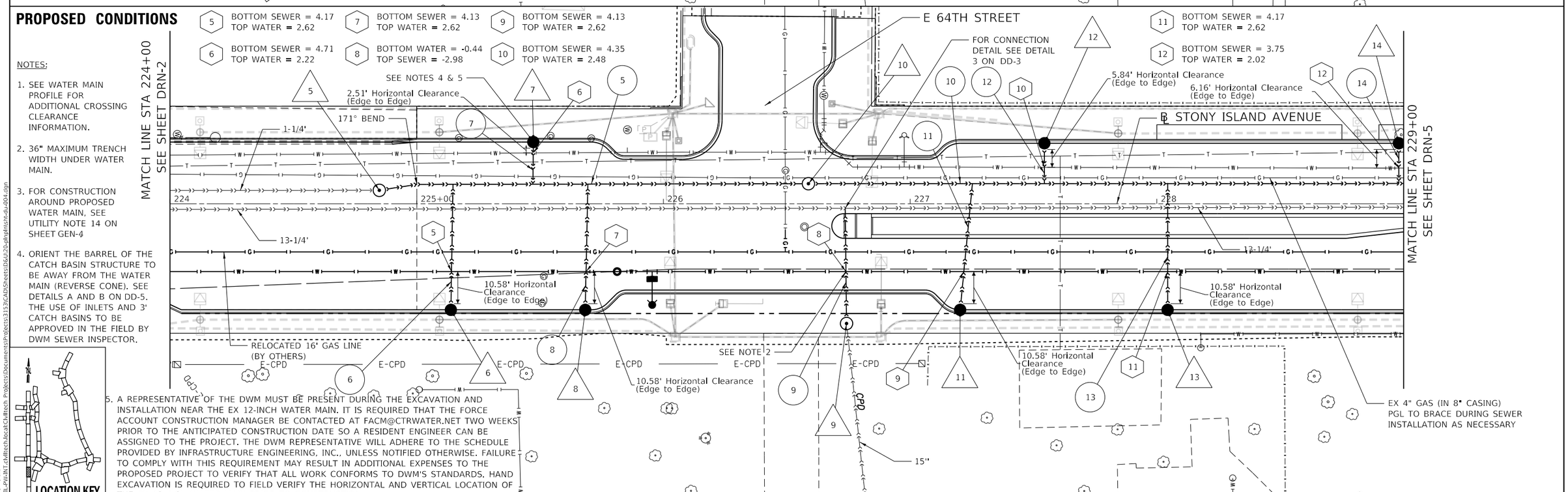


NOTES:

1. SEE WATER MAIN PROFILE FOR ADDITIONAL CROSSING CLEARANCE INFORMATION.
2. 36" MAXIMUM TRENCH WIDTH UNDER WATER MAIN.
3. FOR CONSTRUCTION AROUND PROPOSED WATER MAIN, SEE UTILITY NOTE 14 ON SHEET GEN-4
4. ORIENT THE BARREL OF THE CATCH BASIN STRUCTURE TO BE AWAY FROM THE WATER MAIN (REVERSE CONE). SEE DETAILS A AND B ON DD-5. THE USE OF INLETS AND 3' CATCH BASINS TO BE APPROVED IN THE FIELD BY DWM SEWER INSPECTOR.
5. A REPRESENTATIVE OF THE DWM MUST BE PRESENT DURING THE EXCAVATION AND INSTALLATION NEAR THE EX 12-INCH WATER MAIN. IT IS REQUIRED THAT THE FORCE ACCOUNT CONSTRUCTION MANAGER BE CONTACTED AT FACM@CTRWATER.NET TWO WEEKS PRIOR TO THE ANTICIPATED CONSTRUCTION DATE SO A RESIDENT ENGINEER CAN BE ASSIGNED TO THE PROJECT. THE DWM REPRESENTATIVE WILL ADHERE TO THE SCHEDULE PROVIDED BY INFRASTRUCTURE ENGINEERING, INC., UNLESS NOTIFIED OTHERWISE. FAILURE TO COMPLY WITH THIS REQUIREMENT MAY RESULT IN ADDITIONAL EXPENSES TO THE PROPOSED PROJECT TO VERIFY THAT ALL WORK CONFORMS TO DWM'S STANDARDS. HAND EXCAVATION IS REQUIRED TO FIELD VERIFY THE HORIZONTAL AND VERTICAL LOCATION OF THE EX 12-INCH WATER MAIN PRIOR TO CONSTRUCTION.



LOCATION KEY

PLOT DATE: 5/17/2021
PLOT SCALE: 40.0000 ' / in.
FILE NAME: pw:\\CIVIL-PW-INT.civiltech.local:Civiltech Projects\Documents\Projects\3153\CAD\Sheets\D&U\20-plnpln\sht-du-004.dgn

| | | | | | |
|---|---|---|---|---|---|
| DESIGN: | MSA | | | $REV3 | |
| DRAWN: | MSA | | | $REV2 | |
| CHECKED: | TKL | | | $REV1 | |
| APPROVED: | | NO. | BY | DATE | DESCRIPTION |
| DATE: 03/26/2021 | | REVISIONS | | | |

CDOT CHICAGO DEPARTMENT OF TRANSPORTATION

C*NECT

DRAINAGE PLAN
EXISTING & PROPOSED CONDITIONS
S. STONY ISLAND AVE.

JACKSON PARK MOBILITY IMPROVEMENTS

STA. 224+00 TO STA. 229+00

| | | |
|---|---|---|
| CONTRACT NO. - | TOTAL SHEETS 1434 | SHEET NO. 433 |
| PROJECT NO. B-7-203 | DRAWING NO. DRN-3 | |
| SCALE: 1"=20' | | |

5

MH TYPE B 3' DIA, T1F CL (COC)
STA. 224+84.83, 5.43' LT
RIM EL. 8.18
INV EL. -2.45 (N/S)

12

CB TYPE A 4' DIA, T1F OL (COC)
STA. 227+54.40, 24.50' LT
RIM EL. 7.72
INV EL. 4.39 (E)

6

CB TYPE A 4' DIA, T1F OL (COC)
STA. 225+13.82, 43.00' RT
RIM EL. 7.51
INV EL. 4.24 (W)

13

CB TYPE A 4' DIA, T1F OL (COC)
STA. 228+04.37, 43.00' RT
RIM EL. 7.37
INV EL. 4.24 (W)

7

CB TYPE A 4' DIA, T1F OL (COC)
STA. 225+47.24, 25.02' LT
RIM EL. 7.62
INV EL. 4.72 (E)

14

CB TYPE A 4' DIA, T1F OL (COC)
STA. 228+98.09, 24.50' LT
RIM EL. 7.13
INV EL. 3.79 (E)

8

CB TYPE A 4' DIA, T1F OL (COC)
STA. 225+68.29, 43.00' RT
RIM EL. 7.97
INV EL. 4.20 (W)

9

MH TYPE A 3' DIA, T1F CL (COC)
STA. 226+74.22, 48.53' RT
RIM EL. 8.80
INV EL. UNKNOWN (EX E)
INV EL. -4.30 (W)

10

MH TYPE A 3' DIA, T1F CL (COC)
STA. 226+58.76, 8.11' LT
RIM EL. 8.57
INV EL. -2.82 (N/S)

11

CB TYPE A 4' DIA, T1F OL (COC)
STA. 227+20.27, 43.00' RT
RIM EL. 7.98
INV EL. 4.20 (W)

5

STORM SEWERS
TYPE 2, RCP
24" - 169' @ 0.22%
TBF - 255.0 CY

12

STORM SEWERS
TYPE 1, DIP
8" - 14' @ 0.54%
TBF - 3.0 CY

6

STORM SEWERS
TYPE 2, DIP
8" - 48' @ 0.54%
TBF - 7.0 CY

13

STORM SEWERS
TYPE 1, DIP
8" - 49' @ 0.54%
TBF - 5.0 CY

7

STORM SEWERS
TYPE 1, DIP
8" - 17' @ 0.54%
TBF - 2.0 CY

14

STORM SEWERS
TYPE 1, DIP
8" - 14' @ 0.54%
TBF - 3.0 CY

8

STORM SEWERS
TYPE 2, DIP
8" - 44' @ 0.54%
TBF - 8.0 CY

9

STORM SEWERS
TYPE 3, DIP
16" - 40' @ 0.32%
TBF - 71.0 CY

10

STORM SEWERS
TYPE 2, DIP
30" - 312' @ 0.13%
TBF - 508.0 CY

11

STORM SEWERS
TYPE 2, DIP
8" - 44' @ 0.54%
TBF - 8.0 CY

PLOT DATE: 5/17/2021
PLOT SCALE: 40.0000 ' / in.
FILE NAME: pw:\\CIVIL-PW-INT.civiltech.local:Civiltech Projects\Documents\Projects\3153\CAD\Sheets\D&U\20-plnpln\sht-du-004b.dgn

| | | | | |
|---|---|---|---|---|
| DESIGN: MSA | | | | |
| DRAWN: MSA | | | | |
| CHECKED: TKL | | | | |
| APPROVED: | NO. | BY | DATE | DESCRIPTION |
| DATE: 01/22/2021 | REVISIONS | | | |

CDOT CHICAGO DEPARTMENT OF TRANSPORTATION

C*NECT

DRAINAGE PLAN
NOTES
S. STONY ISLAND AVE.

JACKSON PARK MOBILITY IMPROVEMENTS

STA. 224+00 TO STA. 229+00

CONTRACT NO. -
PROJECT NO. B-7-203
SCALE: NONE

| TOTAL SHEETS | SHEET NO. |
|---|---|
| 1434 | 434 |

DRAWING NO. DRN-4

## EXISTING CONDITIONS

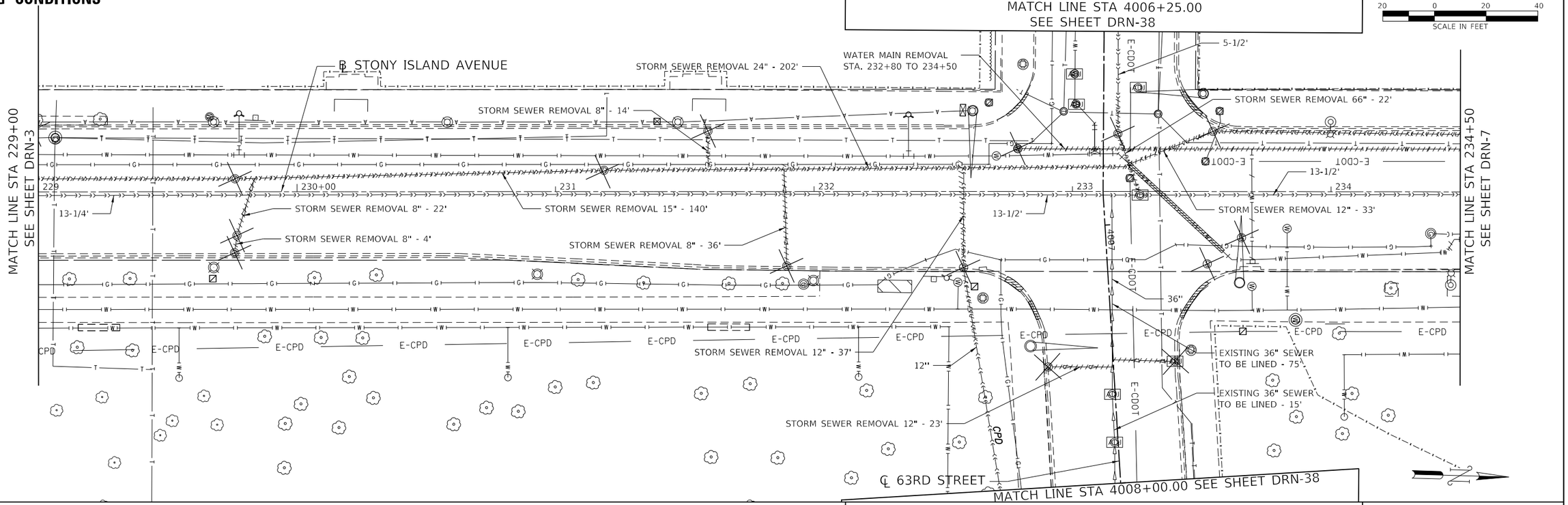


## PROPOSED CONDITIONS

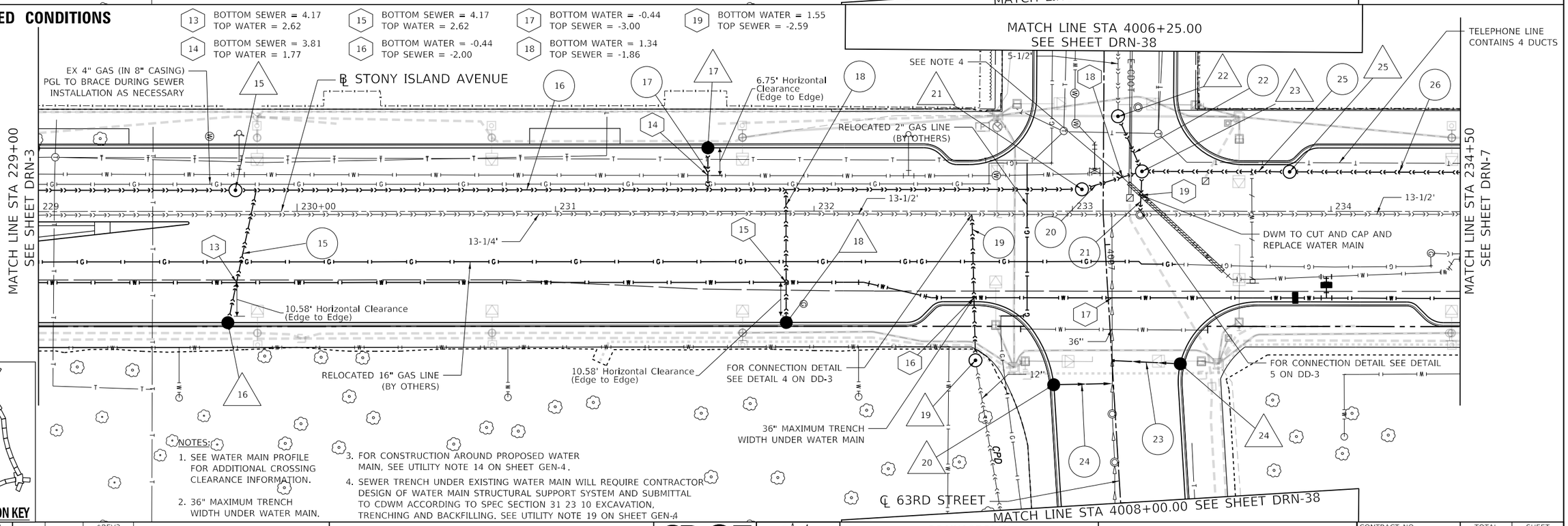


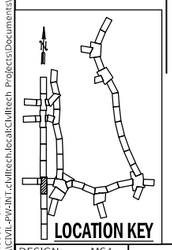


NOTES:

1. SEE WATER MAIN PROFILE FOR ADDITIONAL CROSSING CLEARANCE INFORMATION.
2. 36" MAXIMUM TRENCH WIDTH UNDER WATER MAIN.
3. FOR CONSTRUCTION AROUND PROPOSED WATER MAIN, SEE UTILITY NOTE 14 ON SHEET GEN-4.
4. SEWER TRENCH UNDER EXISTING WATER MAIN WILL REQUIRE CONTRACTOR DESIGN OF WATER MAIN STRUCTURAL SUPPORT SYSTEM AND SUBMITTAL TO CDWM ACCORDING TO SPEC SECTION 31 23 10 EXCAVATION, TRENCHING AND BACKFILLING. SEE UTILITY NOTE 19 ON SHEET GEN-4

| | | | | |
|---|---|---|---|---|
| DESIGN: MSA | | | $REV3 | |
| DRAWN: MSA | | | $REV2 | |
| CHECKED: TKL | | | $REV1 | |
| APPROVED: | NO. | BY | DATE | DESCRIPTION |
| DATE: 03/26/2021 | REVISIONS | | | |

CDOT CHICAGO DEPARTMENT OF TRANSPORTATION

C²NECT

**DRAINAGE PLAN**
**EXISTING & PROPOSED CONDITIONS**
**S. STONY ISLAND AVE.**

**JACKSON PARK MOBILITY IMPROVEMENTS**

STA. 229+00 TO STA. 234+50

| | |
|---|---|
| CONTRACT NO. - | TOTAL SHEETS 1434 / SHEET NO. 435 |
| PROJECT NO. B-7-203 | DRAWING NO. DRN-5 |
| SCALE: 1"=20' | |

PLOT DATE: 5/17/2021
PLOT SCALE: 40.0000 ' / in.
FILE NAME: pw:\\CIVIL-PW-INT.cloudtech-local:CivilTech Projects:Documents\P-0\Jects\3153\CADD\Sheets\DGU\20-drngNotes-du-005.dgn

15

MH TYPE A 3' DIA, T1F CL (COC)
STA. 229+76.22, 8.20' LT
RIM EL. 7.81
INV EL. -3.24 (N/S)

22

MH TYPE A 3' DIA, T1F CL (COC)
STA. 233+17.53, 36.63' LT
RIM EL. 7.53
INV EL. -8.04 (NE/EX W)

16

CB TYPE A 4' DIA, T1F OL (COC)
STA. 229+73.25, 43.00' RT
RIM EL. 7.00
INV EL. 4.24 (NW)

23

TUMBLING BASIN, 96" DIA
STA. 233+26.84, 15.35' LT
RIM EL. 7.76
INV EL. -3.99 (N)
INV EL. -8.11 (SW/E)
INV EL. -4.43 (SE)
NO SUMP REQUIRED

17

CB TYPE A 4' DIA, T1F OL (COC)
STA. 231+58.97, 24.50' LT
RIM EL. 7.07
INV EL. 3.85 (E)

24

CB TYPE A 4' DIA, T1F OL (COC)
STA. 233+41.75, 59.00' RT
RIM EL. 7.08
INV EL. 2.58 (SE)

18

CB TYPE A 4' DIA, T1F OL (COC)
STA. 231+89.25, 43.00' RT
RIM EL. 6.89
INV EL. 4.24 (W)

25

MH TYPE A 3' DIA, T1F CL (COC)
STA. 233+83.95, 15.24' LT
RIM EL. 7.55
INV EL. -3.85 (N/S)

19

MH TYPE A 3' DIA, T1F CL (COC)
STA. 232+62.43, 57.66' RT
RIM EL. 8.08
INV EL. -0.74 (EX E)
INV EL. -2.94 (W)

20

CB TYPE A 4' DIA, T1F OL (COC)
STA. 4007+52.78, 23.06' RT
RIM EL. 7.13
INV EL. 2.63 (N)

21

MH TYPE A 3' DIA, T1F CL (COC)
STA. 233+03.65, 8.40' LT
RIM EL. 7.92
INV EL. -4.36 (NW/S)

15

STORM SEWERS
TYPE 1, DIP
8" - 51' @ 0.54%
TBF - 5.0 CY

22

STORM SEWERS
TYPE 3, RCP
66" - 18' @ 0.40%
TBF - 59.0 CY

16

STORM SEWERS
TYPE 2, DIP
30" - 322' @ 0.35%
TBF - 557.0 CY

23

STORM SEWERS
TYPE 2, ESVCP
8" - 24' @ 0.54%
TBF - 5.0 CY

17

STORM SEWERS
TYPE 1, DIP
8" - 14' @ 0.54%
TBF - 3.0 CY

24

STORM SEWERS
TYPE 2, DIP
8" - 21' @ 0.54%
TBF - 6.0 CY

18

STORM SEWERS
TYPE 1, DIP
8" - 50' @ 0.54%
TBF - 4.0 CY

25

STORM SEWERS
TYPE 3, DIP
18" - 53' @ 0.26%
TBF - 82.0 CY

19

STORM SEWERS
TYPE 3, DIP
12" - 49' @ 0.50%
TBF - 66.0 CY

26

STORM SEWERS
TYPE 2, DIP
18" - 226' @ 0.26%
TBF - 322.0 CY

20

STORM SEWERS
TYPE 2, DIP
30" - 19' @ 0.35%
TBF - 36.0 CY

21

STORM SEWERS
TYPE 3, RCP
66" - 8' @ 0.40%
TBF - 27.0 CY

PLOT DATE: 5/17/2021
PLOT SCALE: 40.0000 ' / in.
FILE NAME: pw:\\CIVIL-PW-INT.civiltech.local:Civiltech Projects\Documents\Projects\3153\CAD\Sheets\D&U\20-plnpln\sht-du-005b.dgn

| | | | | |
|---|---|---|---|---|
| DESIGN: MSA | | | | |
| DRAWN: MSA | | | | |
| CHECKED: TKL | | | | |
| APPROVED: | NO. | BY | DATE | DESCRIPTION |
| DATE: 03/26/2021 | REVISIONS | | | |

CDOT CHICAGO DEPARTMENT OF TRANSPORTATION

C*NECT

DRAINAGE PLAN
NOTES
S. STONY ISLAND AVE.

JACKSON PARK MOBILITY IMPROVEMENTS

STA. 229+00 TO STA. 234+50

| | | |
|---|---|---|
| CONTRACT NO. - | TOTAL SHEETS 1434 | SHEET NO. 436 |
| PROJECT NO. B-7-203 | DRAWING NO. DRN-6 | |
| SCALE: NONE | | |

## EXISTING CONDITIONS

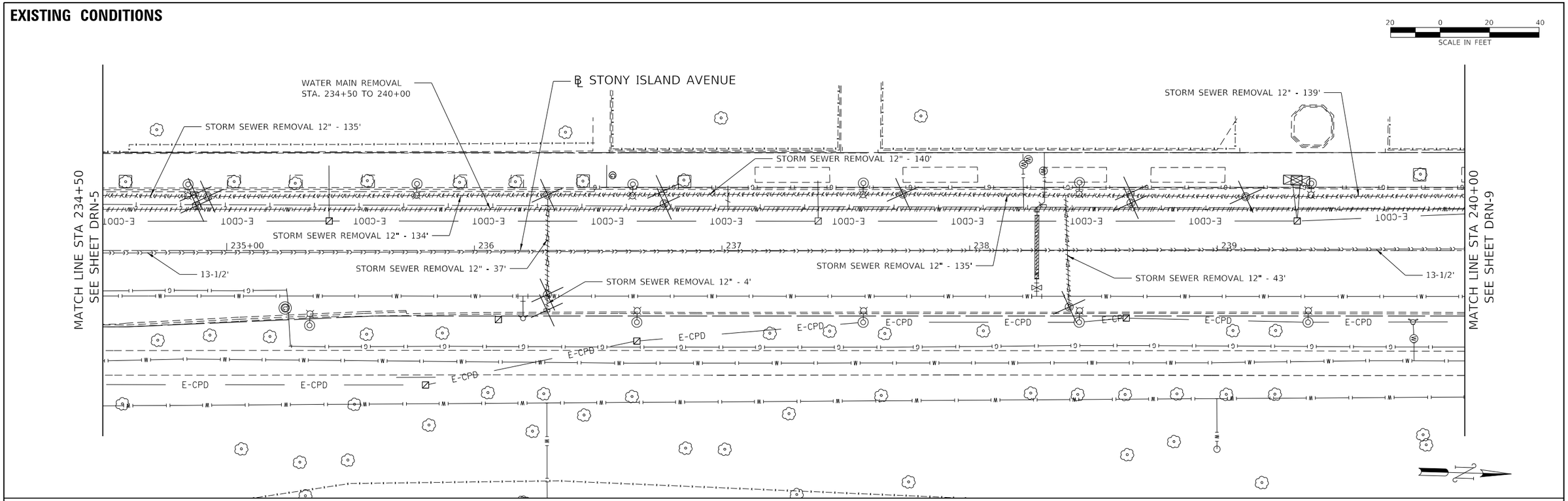


## PROPOSED CONDITIONS

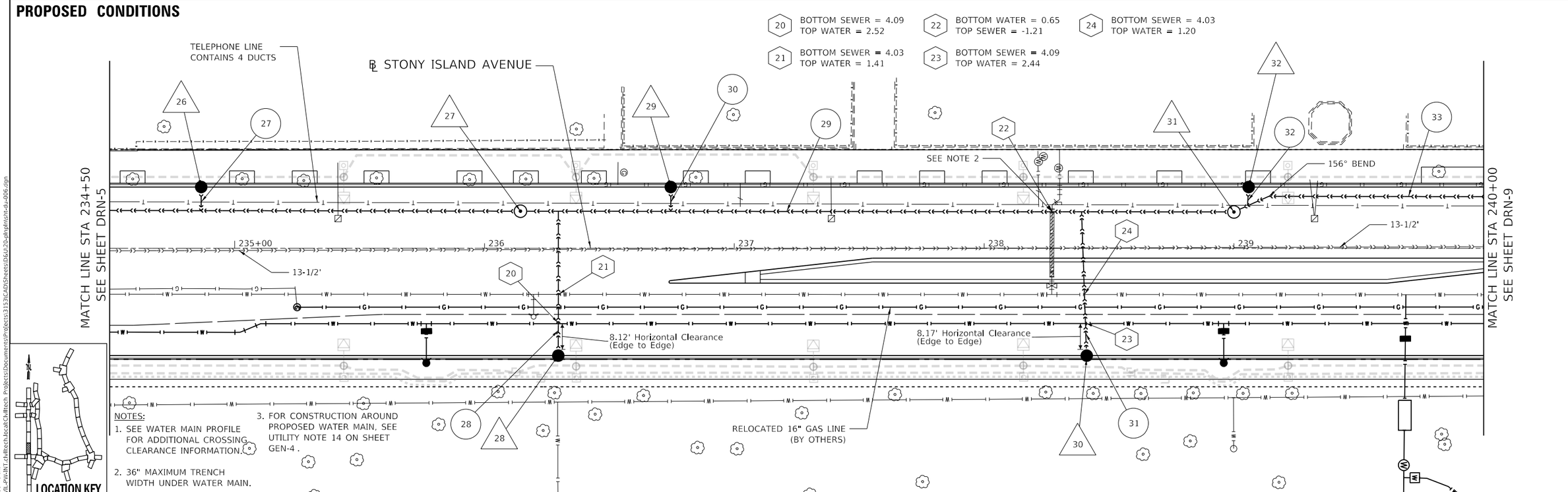


NOTES:

1. SEE WATER MAIN PROFILE FOR ADDITIONAL CROSSING CLEARANCE INFORMATION.
2. 36" MAXIMUM TRENCH WIDTH UNDER WATER MAIN.
3. FOR CONSTRUCTION AROUND PROPOSED WATER MAIN, SEE UTILITY NOTE 14 ON SHEET GEN-4 .



LOCATION KEY

| | | | | |
|---|---|---|---|---|
| DESIGN: MSA | | | SREV3 | |
| DRAWN: MSA | | | SREV2 | |
| CHECKED: TKL | | | SREV1 | |
| APPROVED: | NO. | BY | DATE | DESCRIPTION |
| DATE: 03/26/2021 | REVISIONS | | | |

CDOT CHICAGO DEPARTMENT OF TRANSPORTATION

C*NECT

DRAINAGE PLAN
EXISTING & PROPOSED CONDITIONS
S. STONY ISLAND AVE.

JACKSON PARK MOBILITY IMPROVEMENTS

STA. 234+50 TO STA. 240+00

CONTRACT NO. -
PROJECT NO. B-7-203
SCALE: 1"=20'

TOTAL SHEETS 1434
SHEET NO. 437
DRAWING NO. DRN-7

PLOT DATE: 5/17/2021
PLOT SCALE: 40.0000 ' / in.
FILE NAME: pw:\\CIVIL-PW-INT.civiltech.local:Civiltech Projects\Documents\Projects\3153\CAD\Sheets\D&U\20-plnpln\sht-du-006.dgn

26

CB TYPE A 4' DIA, T1F OL (COC)
STA. 234+86.62, 24.55' LT
RIM EL. 7.05
INV EL. 2.55 (E)

27

MH TYPE A 3' DIA, T1F CL (COC)
STA. 236+29.66, 14.84' LT
RIM EL. 7.22
INV EL. -3.26 (N/S)

28

CB TYPE A 4' DIA, T1F OL (COC)
STA. 236+29.55, 42.98' RT
RIM EL. 6.74
INV EL. 4.15 (W)

29

CB TYPE A 4' DIA, T1F OL (COC)
STA. 236+74.59, 24.50' LT
RIM EL. 6.70
INV EL. 2.20 (E)

30

CB TYPE A 4' DIA, T1F OL (COC)
STA. 238+41.08, 43.00' RT
RIM EL. 6.82
INV EL. 4.15 (W)

31

MH TYPE A 3' DIA, T1F CL (COC)
STA. 239+00.00, 14.52' LT
RIM EL. 7.07
INV EL. -2.53 (NW/S)

32

CB TYPE A 4' DIA, T1F OL (COC)
STA. 239+05.91, 24.50' LT
RIM EL. 6.77
INV EL. 2.27 (NE)

27

STORM SEWERS
TYPE 2, ESVCP
8" - 7' @ 1.00%
TBF - 3.0 CY

28

STORM SEWERS
TYPE 1, DIP
8" - 55' @ 0.54%
TBF - 3.0 CY

29

STORM SEWERS
TYPE 2, DIP
18" - 281' @ 0.26%
TBF - 354.0 CY

30

STORM SEWERS
TYPE 2, ESVCP
8" - 7' @ 1.00%
TBF - 3.0 CY

31

STORM SEWERS
TYPE 1, DIP
8" - 55' @ 0.54%
TBF - 4.0 CY

32

STORM SEWERS
TYPE 2, ESVCP
8" - 5' @ 1.00%
TBF - 2.0 CY

33

STORM SEWERS
TYPE 2, DIP
18" - 151' @ 0.26%
TBF - 171.0 CY

PLOT DATE: 5/17/2021
PLOT SCALE: 40.0000 ' / in.
FILE NAME: pw:\\CIVIL-PW-INT.civiltech.local:Civiltech Projects\Documents\Projects\3153\CAD\Sheets\D&U\20-plnpln\sht-du-006b.dgn

| | | | | |
|---|---|---|---|---|
| DESIGN: MSA | | | | |
| DRAWN: MSA | | | | |
| CHECKED: TKL | | | | |
| APPROVED: | NO. | BY | DATE | DESCRIPTION |
| DATE: 01/22/2021 | REVISIONS | | | |

CDOT CHICAGO DEPARTMENT OF TRANSPORTATION

C*NECT

DRAINAGE PLAN
NOTES
S. STONY ISLAND AVE.

JACKSON PARK MOBILITY IMPROVEMENTS

STA. 234+50 TO STA. 240+00

CONTRACT NO. -
PROJECT NO. B-7-203
SCALE: NONE

| TOTAL SHEETS | SHEET NO. |
|---|---|
| 1434 | 438 |

DRAWING NO. DRN-8

## EXISTING CONDITIONS

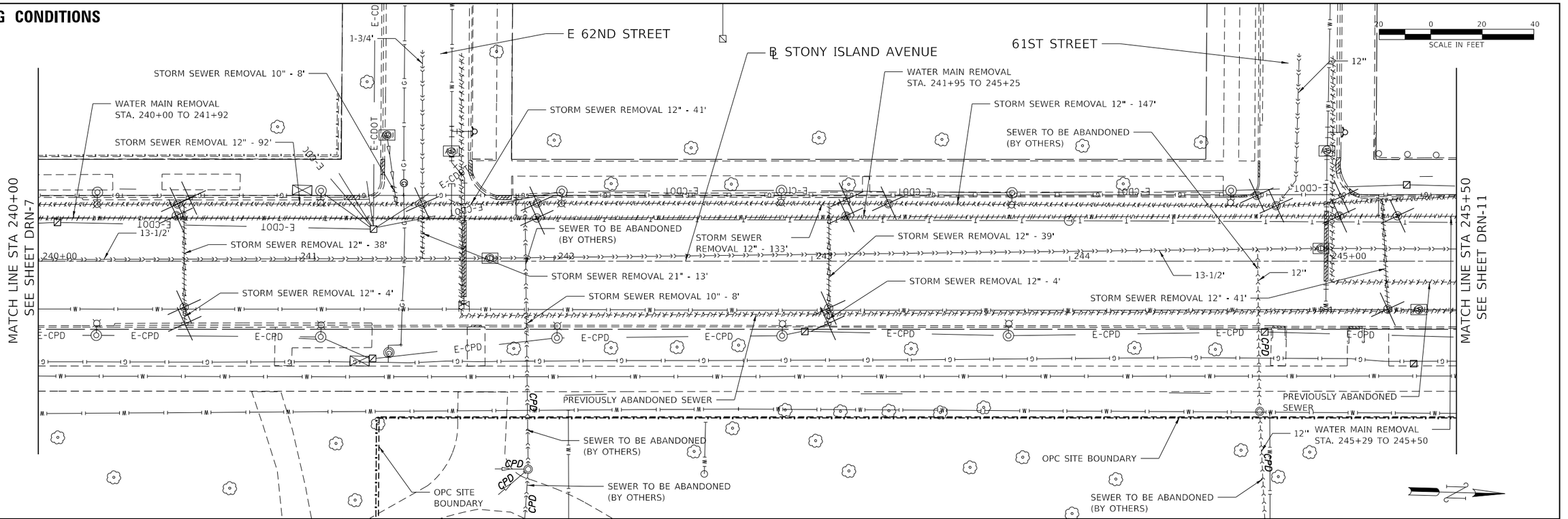


## PROPOSED CONDITIONS

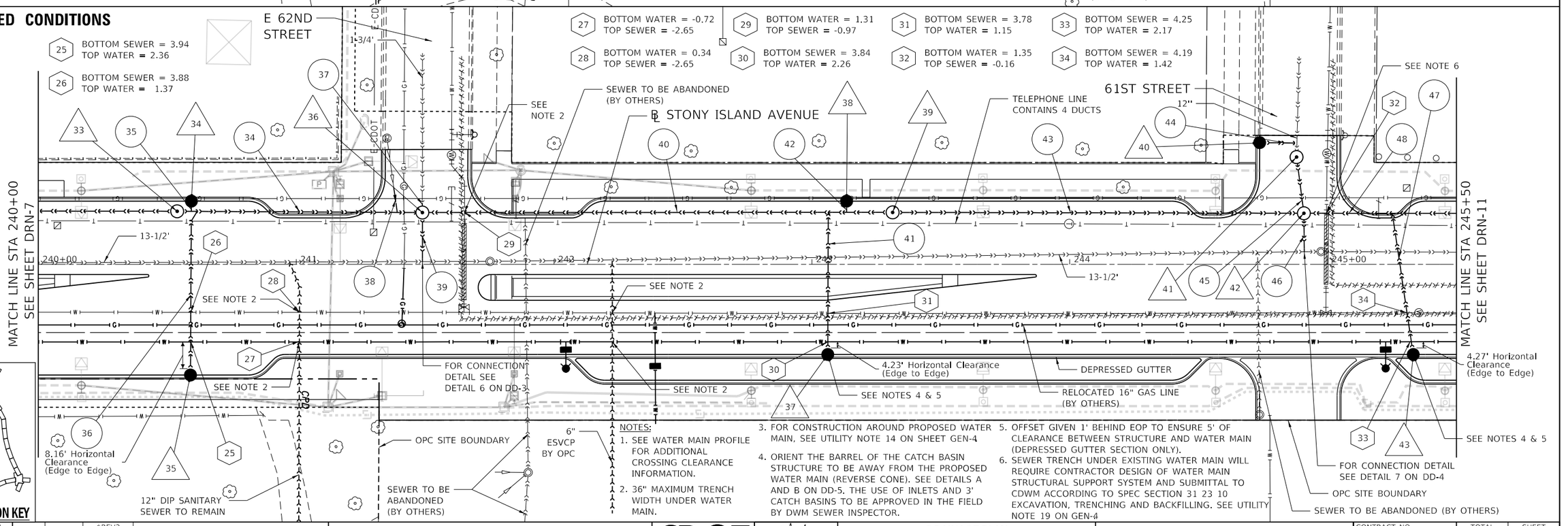


NOTES:

1. SEE WATER MAIN PROFILE FOR ADDITIONAL CROSSING CLEARANCE INFORMATION.
2. 36" MAXIMUM TRENCH WIDTH UNDER WATER MAIN.
3. FOR CONSTRUCTION AROUND PROPOSED WATER MAIN, SEE UTILITY NOTE 14 ON SHEET GEN-4
4. ORIENT THE BARREL OF THE CATCH BASIN STRUCTURE TO BE AWAY FROM THE PROPOSED WATER MAIN (REVERSE CONE). SEE DETAILS A AND B ON DD-5. THE USE OF INLETS AND 3' CATCH BASINS TO BE APPROVED IN THE FIELD BY DWM SEWER INSPECTOR.
5. OFFSET GIVEN 1' BEHIND EOP TO ENSURE 5' OF CLEARANCE BETWEEN STRUCTURE AND WATER MAIN (DEPRESSED GUTTER SECTION ONLY).
6. SEWER TRENCH UNDER EXISTING WATER MAIN WILL REQUIRE CONTRACTOR DESIGN OF WATER MAIN STRUCTURAL SUPPORT SYSTEM AND SUBMITTAL TO CDWM ACCORDING TO SPEC SECTION 31 23 10 EXCAVATION, TRENCHING AND BACKFILLING. SEE UTILITY NOTE 19 ON GEN-4

| | | | | | |
|---|---|---|---|---|---|
| DESIGN: MSA | | | $REV3 | | |
| DRAWN: MSA | | | $REV2 | | |
| CHECKED: TKL | | | $REV1 | | |
| APPROVED: | NO. | BY | DATE | DESCRIPTION | |
| DATE: 03/29/2021 | REVISIONS | | | | |

CDOT CHICAGO DEPARTMENT OF TRANSPORTATION

CONNECT

**DRAINAGE PLAN**
**EXISTING & PROPOSED CONDITIONS**
**S. STONY ISLAND AVE.**

**JACKSON PARK MOBILITY IMPROVEMENTS**
STA. 240+00 TO STA. 245+50

| | |
|---|---|
| CONTRACT NO. | - |
| PROJECT NO. | B-7-203 |
| SCALE: | 1"=20' |
| TOTAL SHEETS | 1434 |
| SHEET NO. | 439 |
| DRAWING NO. | DRN-9 |

PLOT DATE: 5/17/2021
PLOT SCALE: 40.0000 ' / in.
FILE NAME: pw:\\CTVL-PW-INT.cdot.tech.local\CDoTech Projects\Documents\Projects\3133\CADSheets\D&U\20-plnpln\sht-du-007.dgn

33

MH TYPE A 3' DIA, T1F CL (COC)
STA. 240+53.83, 20.56' LT
RIM EL. 6.89
INV EL. -2.14 (N/S)

34

CB TYPE A 4' DIA, T1F OL (COC)
STA. 240+59.35, 24.50' LT
RIM EL. 6.76
INV EL. 2.26 (E)

35

CB TYPE A 4' DIA, T1F OL (COC)
STA. 240+58.99, 42.96' RT
RIM EL. 6.91
INV EL. 4.00 (W)

36

MH TYPE C SINGLE-DROP,
3' DIA, T1F CL (COC)
STA. 241+48.94, 20.07' LT
RIM EL. 7.40
INV EL. -2.59 (N)
INV EL. -2.41 (S)
INV EL. -6.49 (E)
INV EL. -2.99 (EX W)

37

CB TYPE A 4' DIA, T1F OL (COC)
STA. 243+06.14, 36.00' RT
RIM EL. 6.73
INV EL. 3.87 (W)

38

CB TYPE A 4' DIA, T1F OL (COC)
STA. 243+13.46, 24.50' LT
RIM EL. 6.49
INV EL. 1.99 (E)

39

MH TYPE A 3' DIA, T1F CL (COC)
STA. 243+31.30, 20.12' LT
RIM EL. 6.67
INV EL. -1.61 (N/S)

40

CB TYPE A 4' DIA, T1F OL (COC)
STA. 244+73.66, 47.21' LT
RIM EL. 6.89
INV EL. 2.50 (N)

41

MH TYPE A 3' DIA, T1F CL (COC)
STA. 244+87.97, 41.60' LT
RIM EL. 7.31
INV EL. -1.64 (E)
INV EL. -0.64 (EX W)

42

MH TYPE C SINGLE-DROP,
3' DIA, T1F CL (COC)
STA. 244+90.81, 19.80' LT
RIM EL. 7.47
INV EL. -2.24 (N)
INV EL. -2.01 (S)
INV EL. -5.74 (E)
INV EL. -1.79 (W)

43

CB TYPE A 4' DIA, T1F OL (COC)
STA. 245+33.19, 36.00' RT
RIM EL. 7.06
INV EL. 4.28 (W)

34

STORM SEWERS
TYPE 2, DIP
18" - 90' @ 0.30%
TBF - 104.0 CY

35

STORM SEWERS
TYPE 2, ESVCP
8" - 2' @ 1.00%
TBF - 2.0 CY

36

STORM SEWERS
TYPE 1, DIP
8" - 61' @ 0.54%
TBF - 4.0 CY

37

STORM SEWERS
TYPE 2, ESVCP
21" - 2' @ 0.50%
TBF - 3.0 CY

38

STORM SEWERS
TYPE 2, ESVCP
10" - 10' @ 0.54%
TBF - 4.0 CY

39

STORM SEWERS
TYPE 3, RCP
24" - 12' @ 0.18%
TBF - 26.0 CY

40

STORM SEWERS
TYPE 2, DIP
18" - 178' @ 0.55%
TBF - 193.0 CY

41

STORM SEWERS
TYPE 1, DIP
8" - 57' @ 0.54%
TBF - 4.0 CY

42

STORM SEWERS
TYPE 2, ESVCP
8" - 2' @ 1.00%
TBF - 2.0 CY

43

STORM SEWERS
TYPE 2, DIP
18" - 155' @ 0.26%
TBF - 163.0 CY

44

STORM SEWERS
TYPE 2, ESVCP
8" - 12' @ 1.00%
TBF - 4.0 CY

45

STORM SEWERS
TYPE 2, DIP
24" - 17' @ 0.88%
TBF - 20.0 CY

46

STORM SEWERS
TYPE 3, DIP
24" - 8' @ 0.50%
TBF - 17.0 CY

47

STORM SEWERS
TYPE 1, DIP
8" - 57' @ 0.54%
TBF - 4.0 CY

48

STORM SEWERS
TYPE 2, DIP
24" - 246' @ 0.50%
TBF - 272.0 CY

PLOT DATE: 5/17/2021
PLOT SCALE: 40.0000 ' / in.
FILE NAME: pw:\\CIVIL-PW-INT.civiltech.local:Civiltech Projects\Documents\Projects\3153\CAD\Sheets\D&U\20-plnpln\sht-du-007b.dgn

| | | | | |
|---|---|---|---|---|
| DESIGN: MSA | | | | |
| DRAWN: MSA | | | | |
| CHECKED: TKL | | | | |
| APPROVED: | NO. | BY | DATE | DESCRIPTION |
| DATE: 01/22/2021 | REVISIONS | | | |

CDOT CHICAGO DEPARTMENT OF TRANSPORTATION

C*NECT

DRAINAGE PLAN
NOTES
S. STONY ISLAND AVE.

JACKSON PARK MOBILITY IMPROVEMENTS

STA. 240+00 TO STA. 245+50

CONTRACT NO. -
PROJECT NO. B-7-203
SCALE: NONE

| TOTAL SHEETS | SHEET NO. |
|---|---|
| 1434 | 440 |

DRAWING NO. DRN-10

## EXISTING CONDITIONS

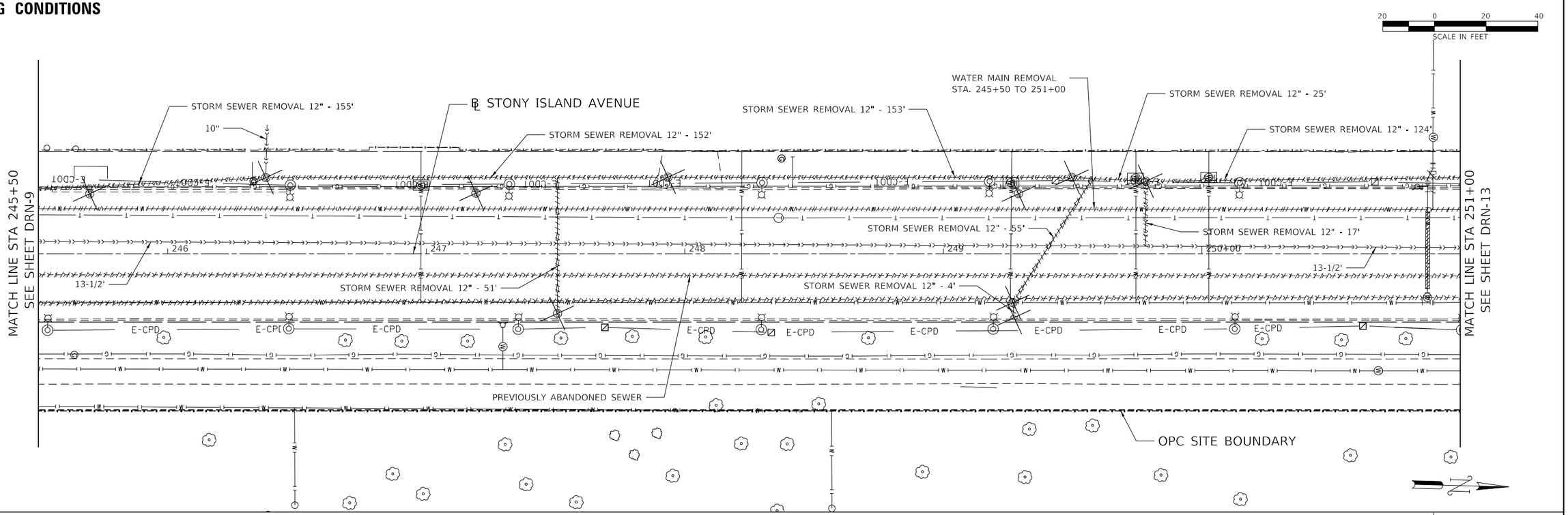


## PROPOSED CONDITIONS

35 BOTTOM SEWER = 4.32
TOP WATER = 2.08

37 BOTTOM SEWER = 4.27
TOP WATER = 2.06

39 BOTTOM WATER = 1.06
TOP SEWER = -0.63

36 BOTTOM SEWER = 4.26
TOP WATER = 1.47

38 BOTTOM SEWER = 4.21
TOP WATER = 1.90

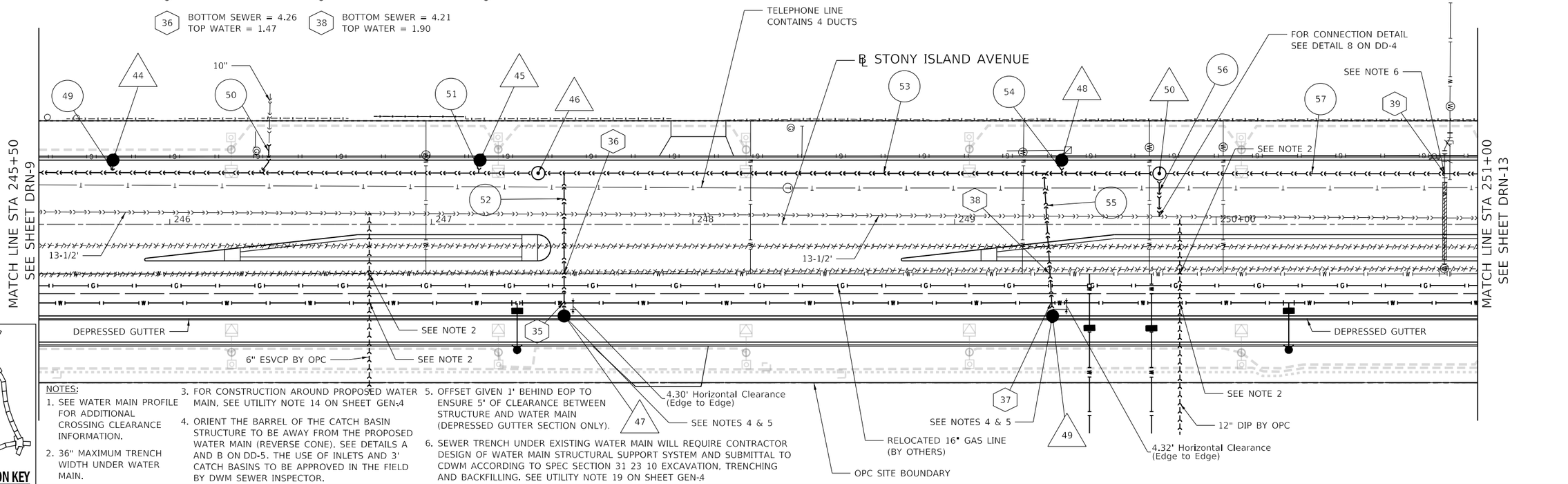


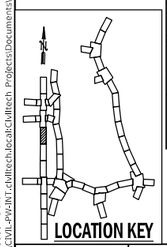


NOTES:

1. SEE WATER MAIN PROFILE FOR ADDITIONAL CROSSING CLEARANCE INFORMATION.
2. 36" MAXIMUM TRENCH WIDTH UNDER WATER MAIN.
3. FOR CONSTRUCTION AROUND PROPOSED WATER MAIN, SEE UTILITY NOTE 14 ON SHEET GEN-4
4. ORIENT THE BARREL OF THE CATCH BASIN STRUCTURE TO BE AWAY FROM THE PROPOSED WATER MAIN (REVERSE CONE). SEE DETAILS A AND B ON DD-5. THE USE OF INLETS AND 3' CATCH BASINS TO BE APPROVED IN THE FIELD BY DWM SEWER INSPECTOR.
5. OFFSET GIVEN 1' BEHIND EOP TO ENSURE 5' OF CLEARANCE BETWEEN STRUCTURE AND WATER MAIN (DEPRESSED GUTTER SECTION ONLY).
6. SEWER TRENCH UNDER EXISTING WATER MAIN WILL REQUIRE CONTRACTOR DESIGN OF WATER MAIN STRUCTURAL SUPPORT SYSTEM AND SUBMITTAL TO CDWM ACCORDING TO SPEC SECTION 31 23 10 EXCAVATION, TRENCHING AND BACKFILLING. SEE UTILITY NOTE 19 ON SHEET GEN-4

| | | | | |
|---|---|---|---|---|
| DESIGN: MSA | | | $REV3 | |
| DRAWN: MSA | | | $REV2 | |
| CHECKED: TKL | | | $REV1 | |
| APPROVED: | NO. | BY | DATE | DESCRIPTION |
| DATE: 03/26/2021 | REVISIONS | | | |

CHICAGO DEPARTMENT OF TRANSPORTATION

C*NECT

**DRAINAGE PLAN**
**EXISTING & PROPOSED CONDITIONS**
**S. STONY ISLAND AVE.**

**JACKSON PARK MOBILITY IMPROVEMENTS**

STA. 245+50 TO STA. 251+00

| | |
|---|---|
| CONTRACT NO. - | TOTAL SHEETS 1434 |
| PROJECT NO. B-7-203 | SHEET NO. 441 |
| SCALE: 1"=20' | DRAWING NO. DRN-11 |

PLOT DATE: 5/17/2021
PLOT SCALE: 40.0000 ' / in.
FILE NAME: ow:\\CIVIL-PW-NT-cl\Tech_local\CivilTech Projects\Documents\Projects\31531\CADD\Sheets\DRAIN20-plnphtsht-dl-008.dgn

44

CB TYPE A 4' DIA, T1F OL (COC)
STA. 245+78.30, 24.5' LT
RIM EL. 6.91
INV EL. 2.41 (E)

45

CB TYPE A 4' DIA, T1F OL (COC)
STA. 247+18.62, 24.50' LT
RIM EL. 6.98
INV EL. 2.48 (E)

46

MH TYPE A 3' DIA, T1F CL (COC)
STA. 247+40.86, 19.53' LT
RIM EL. 7.18
INV EL. -1.01 (N/S)

47

CB TYPE A 4' DIA, T1F OL (COC)
STA. 247+50.73, 36.00' RT
RIM EL. 7.24
INV EL. 4.35 (W)

48

CB TYPE A 4' DIA, T1F OL (COC)
STA. 249+41.02, 24.50' LT
RIM EL. 6.91
INV EL. 2.42 (E)

49

CB TYPE A 4' DIA, T1F OL (COC)
STA. 249+37.44, 36.00' RT
RIM EL. 7.17
INV EL. 4.30 (W)

50

MH TYPE C DOUBLE-DROP,
3' DIA, T1F CL (COC)
STA. 249+78.31, 19.38' LT
RIM EL. 7.20
INV EL. -0.54 (S)
INV EL. -2.94 (N)
INV EL. -3.23 (E)

49

STORM SEWERS
TYPE 2, ESVCP
8" - 2' @ 1.00%
TBF - 2.0 CY

50

STORM SEWERS
TYPE 2, ESVCP
10" - 11' @ 0.50%
TBF - 8.0 CY

51

STORM SEWERS
TYPE 2, ESVCP
8" - 3' @ 1.00%
TBF - 2.0 CY

52

STORM SEWERS
TYPE 1, DIP
8" - 56' @ 0.54%
TBF - 5.0 CY

53

STORM SEWERS
TYPE 2, DIP
24" - 233' @ 0.20%
TBF - 211.0 CY

54

STORM SEWERS
TYPE 2, ESVCP
8" - 3' @ 1.00%
TBF - 2.0 CY

55

STORM SEWERS
TYPE 1, DIP
8" - 56' @ 0.54%
TBF - 4.0 CY

56

STORM SEWERS
TYPE 2, ESVCP
12" - 9' @ 2.00%
TBF - 12.0 CY

57

STORM SEWERS
TYPE 2, DIP
24" - 320' @ 0.25%
TBF - 396.0 CY

PLOT DATE: 5/17/2021
PLOT SCALE: 40.0000 ' / in.
FILE NAME: pw:\\CIVIL-PW-INT.civiltech.local:Civiltech Projects\Documents\Projects\3153\CAD\Sheets\D&U\20-plnpln\sht-du-008b.dgn

| | | | | |
|---|---|---|---|---|
| DESIGN: MSA | | | | |
| DRAWN: MSA | | | | |
| CHECKED: TKL | | | | |
| APPROVED: | NO. | BY | DATE | DESCRIPTION |
| DATE: 01/22/2021 | REVISIONS | | | |

CDOT CHICAGO DEPARTMENT OF TRANSPORTATION

C*NECT

DRAINAGE PLAN
NOTES
S. STONY ISLAND AVE.

JACKSON PARK MOBILITY IMPROVEMENTS

STA. 245+50 TO STA. 251+00

| | | |
|---|---|---|
| CONTRACT NO. - | TOTAL SHEETS 1434 | SHEET NO. 442 |
| PROJECT NO. B-7-203 | DRAWING NO. DRN-12 | |
| SCALE: NONE | | |

## EXISTING CONDITIONS

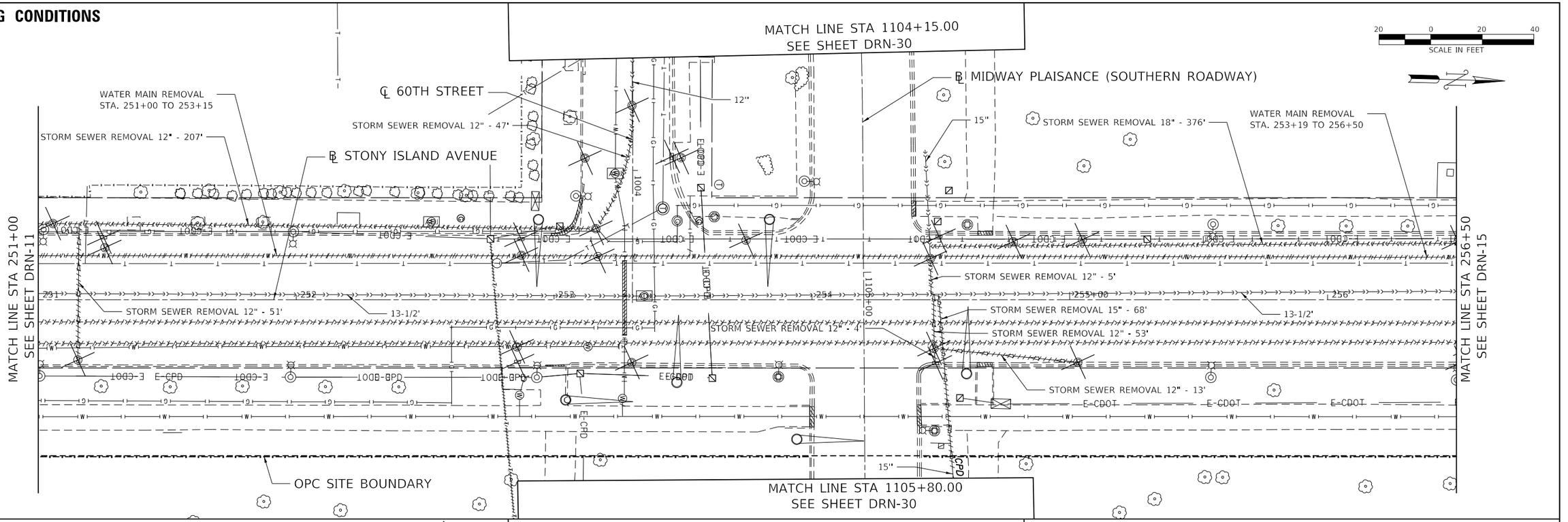


## PROPOSED CONDITIONS

NOTES:

1. SEE WATER MAIN PROFILE FOR ADDITIONAL CROSSING CLEARANCE INFORMATION.
2. 36" MAXIMUM TRENCH WIDTH UNDER WATER MAIN.
3. FOR CONSTRUCTION AROUND PROPOSED WATER MAIN, SEE UTILITY NOTE 14 ON SHEET GEN-4
4. ORIENT THE BARREL OF THE CATCH BASIN STRUCTURE TO BE AWAY FROM THE PROPOSED WATER MAIN (REVERSE CONE). SEE DETAILS A AND B ON DD-5. THE USE OF INLETS AND 3' CATCH BASINS TO BE APPROVED IN THE FIELD BY DWM SEWER INSPECTOR.
5. OFFSET GIVEN 1' BEHIND EOP TO ENSURE CLEARANCE BETWEEN STRUCTURE AND WATER MAIN (DEPRESSED GUTTER SECTION ONLY).

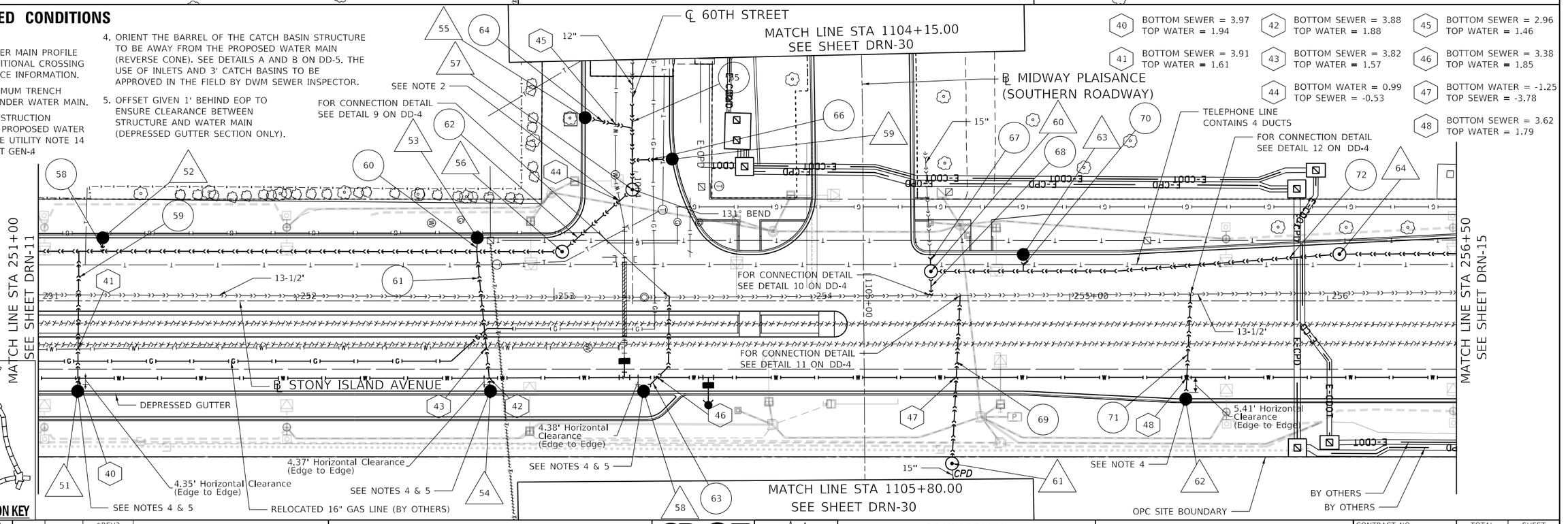


40 BOTTOM SEWER = 3.97 TOP WATER = 1.94
41 BOTTOM SEWER = 3.91 TOP WATER = 1.61
42 BOTTOM SEWER = 3.88 TOP WATER = 1.88
43 BOTTOM SEWER = 3.82 TOP WATER = 1.57
44 BOTTOM WATER = 0.99 TOP SEWER = -0.53
45 BOTTOM SEWER = 2.96 TOP WATER = 1.46
46 BOTTOM SEWER = 3.38 TOP WATER = 1.85
47 BOTTOM WATER = -1.25 TOP SEWER = -3.78
48 BOTTOM SEWER = 3.62 TOP WATER = 1.79

| | | | | | |
|---|---|---|---|---|---|
| DESIGN: MSA | | | $REV3 | | |
| DRAWN: MSA | | | $REV2 | | |
| CHECKED: TKL | | | $REV1 | | |
| APPROVED: | NO. | BY | DATE | DESCRIPTION | |
| DATE: 03/29/2021 | REVISIONS | | | | |

CDOT CHICAGO DEPARTMENT OF TRANSPORTATION

C*NECT

**DRAINAGE PLAN**
**EXISTING & PROPOSED CONDITIONS**
**S. STONY ISLAND AVE.**

**JACKSON PARK MOBILITY IMPROVEMENTS**
STA. 251+00 TO STA. 256+50

| | |
|---|---|
| CONTRACT NO. | - |
| PROJECT NO. | B-7-203 |
| SCALE: | 1"=20' |

| TOTAL SHEETS | SHEET NO. |
|---|---|
| 1434 | 443 |

DRAWING NO. **DRN-13**

PLOT DATE: 5/17/2021
PLOT SCALE: 40.0000 ' / in.
FILE NAME: pw:\\CIVIL-PW-NT.cdot.tech-local:CivilTech Projects\Documents\Projects\3153\CADD\Sheets\DGU\20-drnplnsht-du-009.dgn

51

CB TYPE A 4' DIA, T1F OL (COC)
STA. 251+15.23, 36.00' RT
RIM EL. 7.19
INV EL. 4.00 (W)

52

CB TYPE A 4' DIA, T1F OL (COC)
STA. 251+25.00, 24.50' LT
RIM EL. 7.32
INV EL. 2.82 (E)

53

CB TYPE A 4' DIA, T1F OL (COC)
STA. 252+70.22, 24.50' LT
RIM EL. 6.61
INV EL. 2.11 (E)

54

CB TYPE A 4' DIA, T1F OL (COC)
STA. 252+75.33, 36.00' RT
RIM EL. 6.88
INV EL. 3.91 (W)

55

CB TYPE A 4' DIA, T1F OL (COC)
STA. 253+12.04, 71.11' LT
RIM EL. 6.71
INV EL. 3.06 (NE)

56

MH TYPE A 3' DIA, T1F CL (COC)
STA. 253+03.14, 19.10' LT
RIM EL. 6.81
INV EL. -2.14 (NW/S)

57

MH TYPE C SINGLE-DROP,
3' DIA, T1F CL (COC)
STA. 253+30.36, 43.19' LT
RIM EL. 7.04
INV EL. 2.82 (W)
INV EL. -2.06 (SE)

58

CB TYPE A 4' DIA, T1F OL (COC)
STA. 253+34.71, 36.00' RT
RIM EL. 6.86
INV EL. 3.46 (NW)

59

CB TYPE A 4' DIA, T1F OL (COC)
STA. 253+45.81, 55.03' LT
RIM EL. 6.34
INV EL. 0.40 (S)

60

MH TYPE C DOUBLE-DROP,
3' DIA, T1F CL (COC)
STA. 254+46.17, 11.46' LT
RIM EL. 7.18
INV EL. 1.93 (N/W)
INV EL. -4.74 (E)

61

MH TYPE A 3' DIA, T1F CL (COC)
STA. 254+54.34, 63.10' RT
RIM EL. 7.52
INV EL. UNKNOWN (E)
INV EL. -5.00 (W)

62

CB TYPE A 4' DIA, T1F OL (COC)
STA. 255+45.00, 38.00' RT
RIM EL. 6.65
INV EL. 3.65 (W)

63

CB TYPE A 4' DIA, T1F OL (COC)
STA. 254+81.96, 18.00' LT
RIM EL. 6.68
INV EL. 2.57 (W)

64

MH TYPE A 3' DIA, T1F CL (COC)
STA. 256+04.59, 18.15' LT
RIM EL. 7.24
INV EL. 2.24 (N/S)

58

STORM SEWERS
TYPE 2, ESVCP
8" - 3' @ 1.00%
TBF - 2.0 CY

59

STORM SEWERS
TYPE 1, DIP
8" - 56' @ 0.54%
TBF - 5.0 CY

60

STORM SEWERS
TYPE 2, ESVCP
8" - 3' @ 1.00%
TBF - 2.0 CY

61

STORM SEWERS
TYPE 1, DIP
8" - 56' @ 0.54%
TBF - 4.0 CY

62

STORM SEWERS
TYPE 2, DIP
18" - 32' @ 0.26%
TBF - 35.0 CY

63

STORM SEWERS
TYPE 2, DIP
8" - 36' @ 1.00%
TBF - 6.0 CY

64

STORM SEWERS
TYPE 2, DIP
8" - 16' @ 1.00%
TBF - 4.0 CY

65

STORM SEWERS
TYPE 1, DIP
18" - 32' @ 0.26%
TBF - 5.0 CY

66

STORM SEWERS
TYPE 2, ESVCP
8" - 13' @ 1.00%
TBF - 6.0 CY

67

STORM SEWERS
TYPE 2, ESVCP
15" - 4' @ 0.40%
TBF - 2.0 CY

68

STORM SEWERS
TYPE 3, RCP
24" - 2' @ 0.50%
TBF - 4.0 CY

69

STORM SEWERS
TYPE 3, DIP
16" - 58' @ 0.60%
TBF - 98.0 CY

70

STORM SEWERS
TYPE 2, ESVCP
8" - 4' @ 1.00%
TBF - 2.0 CY

71

STORM SEWERS
TYPE 1, DIP
8" - 35' @ 0.60%
TBF - 4.0 CY

72

STORM SEWERS
TYPE 2, DIP
24" - 154' @ 0.20%
TBF - 33.0 CY

PLOT DATE: 5/17/2021
PLOT SCALE: 40.0000 ' / in.
FILE NAME: pw:\\CIVIL-PW-INT.civiltech.local:CivilTech Projects\Documents\Projects\3153\CADSheets\DGU20-plnpln\cnt-du-009b.dgn

| | | | | |
|---|---|---|---|---|
| DESIGN: MSA | | | | |
| DRAWN: MSA | | | | |
| CHECKED: TKL | | | | |
| APPROVED: | NO. | BY | DATE | DESCRIPTION |
| DATE: 01/22/2021 | REVISIONS | | | |

CDOT CHICAGO DEPARTMENT OF TRANSPORTATION

C*NECT

DRAINAGE PLAN
NOTES
S. STONY ISLAND AVE.

JACKSON PARK MOBILITY IMPROVEMENTS

STA. 251+00 TO STA. 256+50

| | |
|---|---|
| CONTRACT NO. - | TOTAL SHEETS 1434 / SHEET NO. 444 |
| PROJECT NO. B-7-203 | |
| DRAWING NO. DRN-14 | |
| SCALE: NONE | |

## EXISTING CONDITIONS

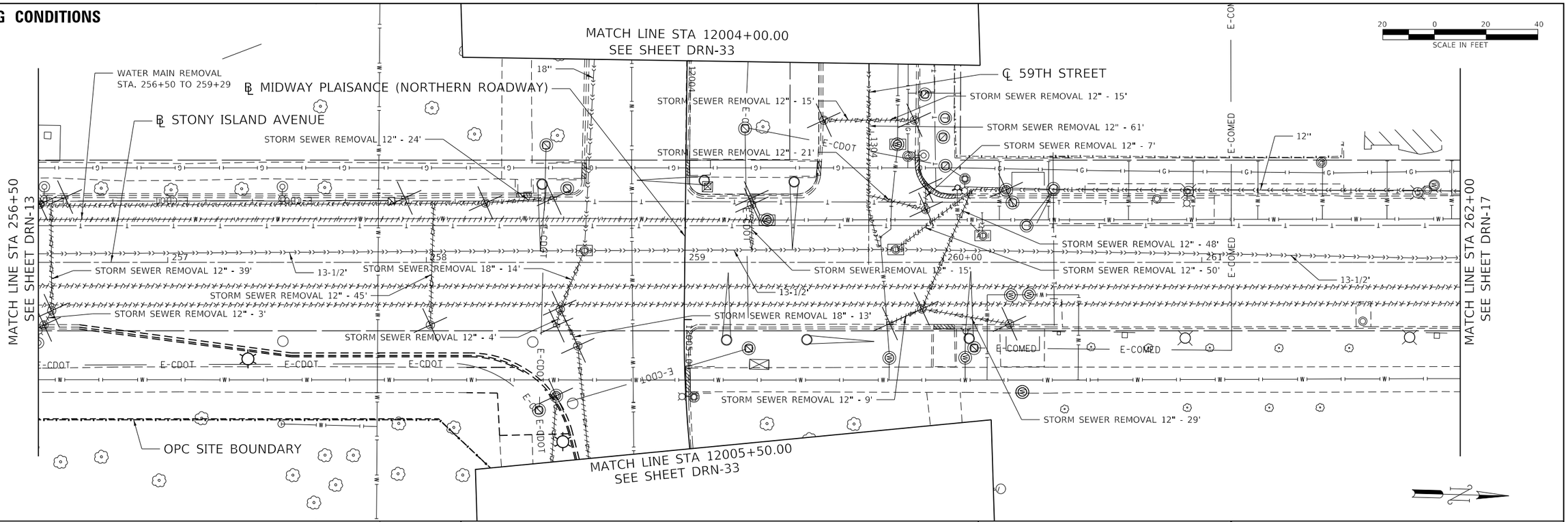


## PROPOSED CONDITIONS

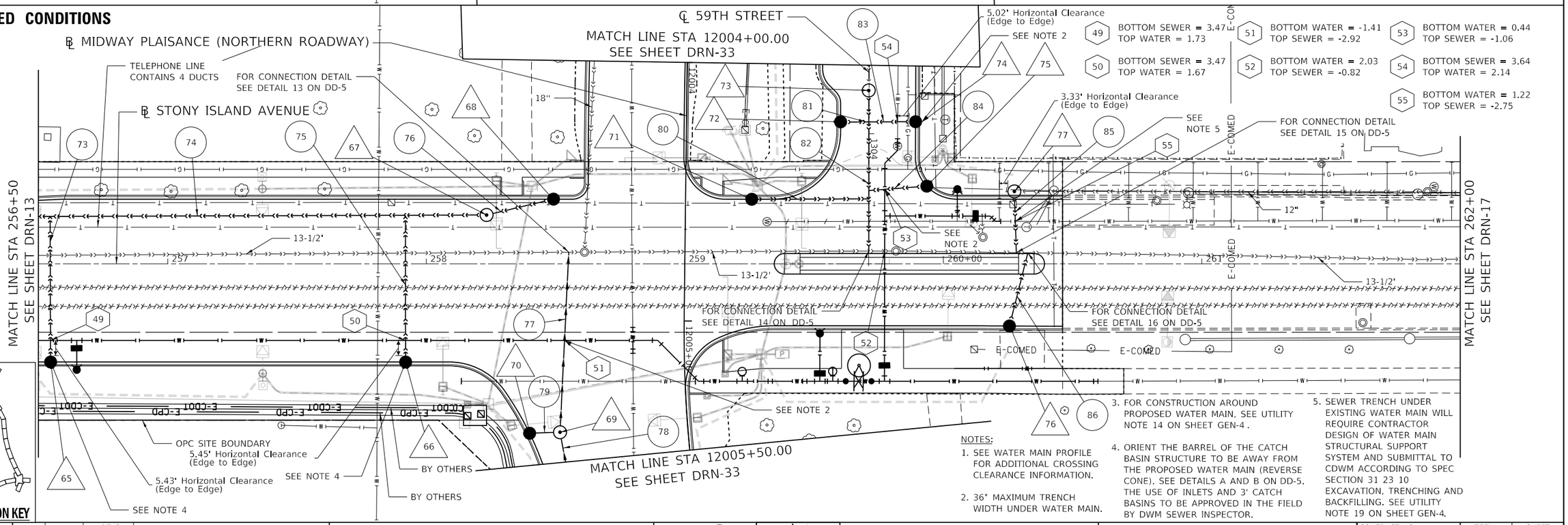


| | | |
|---|---|---|
| 49 BOTTOM SEWER = 3.47 TOP WATER = 1.73 | 51 BOTTOM WATER = -1.41 TOP SEWER = -2.92 | 53 BOTTOM WATER = 0.44 TOP SEWER = -1.06 |
| 50 BOTTOM SEWER = 3.47 TOP WATER = 1.67 | 52 BOTTOM WATER = 2.03 TOP SEWER = -0.82 | 54 BOTTOM SEWER = 3.64 TOP WATER = 2.14 |
| | | 55 BOTTOM WATER = 1.22 TOP SEWER = -2.75 |




NOTES:

1. SEE WATER MAIN PROFILE FOR ADDITIONAL CROSSING CLEARANCE INFORMATION.
2. 36" MAXIMUM TRENCH WIDTH UNDER WATER MAIN.
3. FOR CONSTRUCTION AROUND PROPOSED WATER MAIN, SEE UTILITY NOTE 14 ON SHEET GEN-4 .
4. ORIENT THE BARREL OF THE CATCH BASIN STRUCTURE TO BE AWAY FROM THE PROPOSED WATER MAIN (REVERSE CONE). SEE DETAILS A AND B ON DD-5. THE USE OF INLETS AND 3' CATCH BASINS TO BE APPROVED IN THE FIELD BY DWM SEWER INSPECTOR.
5. SEWER TRENCH UNDER EXISTING WATER MAIN WILL REQUIRE CONTRACTOR DESIGN OF WATER MAIN STRUCTURAL SUPPORT SYSTEM AND SUBMITTAL TO CDWM ACCORDING TO SPEC SECTION 31 23 10 EXCAVATION, TRENCHING AND BACKFILLING. SEE UTILITY NOTE 19 ON SHEET GEN-4.

| | | | | | |
|---|---|---|---|---|---|
| DESIGN: MSA | | | SREV3 | | |
| DRAWN: MSA | | | SREV2 | | |
| CHECKED: TKL | | | SREV1 | | |
| APPROVED: | NO. | BY | DATE | DESCRIPTION | |
| DATE: 03/26/2021 | REVISIONS | | | | |

CDOT CHICAGO DEPARTMENT OF TRANSPORTATION

C*NECT

DRAINAGE PLAN
EXISTING & PROPOSED CONDITIONS
S. STONY ISLAND AVE.

JACKSON PARK MOBILITY IMPROVEMENTS

STA. 256+50 TO STA. 262+00

CONTRACT NO. -
PROJECT NO. B-7-203
SCALE: 1"=20'

| TOTAL SHEETS | SHEET NO. |
|---|---|
| 1434 | 445 |

DRAWING NO. DRN-15

PLOT DATE: 5/17/2021
PLOT SCALE: 40.0000 ' / in.
FILE NAME: pw:\\CIVIL-PW-INT.civiltech.local:Civiltech Projects\Documents\Projects\3153\CAD\Sheets\D&U\20-plnpln\sht-du-010.dgn

65
CB TYPE A 4' DIA, T1F OL (COC)
STA. 256+54.69, 38.00' RT
RIM EL. 6.66
INV EL. 3.50 (W)

66
CB TYPE A 4' DIA, T1F OL (COC)
STA. 257+92.01, 38.00' RT
RIM EL. 6.57
INV EL. 3.50 (W)

67
MH TYPE A 3' DIA, T1F CL (COC)
STA. 258+22.93, 22.87' LT
RIM EL. 6.91
INV EL. 2.67 (N/S)

68
CB TYPE A 4' DIA, T1F OL (COC)
STA. 258+49.23, 25.03' LT
RIM EL. 6.68
INV EL. 2.89 (SE)

69
TUMBLING BASIN, 48" DIA
STA. 258+51.74, 65.15' RT
RIM EL. 6.42
INV EL. 3.15 (E/S)
INV EL. -4.38 (W)
2' SUMP

70
CB TYPE A 4' DIA, T1F OL (COC)
STA. 258+40, 65.54' RT
RIM EL. 6.26
INV EL. 3.19 (N)

71
CB TYPE A 4' DIA, T1F OL (COC)
STA. 259+25.92, 24.94' LT
RIM EL. 6.72
INV EL. 2.22 (E)

72
CB TYPE A 4' DIA, T1F OL (COC)
STA. 259+60.29, 54.87' LT
RIM EL. 6.94
INV EL. 2.44 (N)

73
MH TYPE C SINGLE-DROP,
3' DIA, T1F CL (COC)
STA. 259+71.17, 67.03' LT
RIM EL. 7.61
INV EL. -0.68 (EX W)
INV EL. -4.23 (E)

74
CB TYPE A 4' DIA, T1F OL (COC)
STA. 259+89.24, 54.92' LT
RIM EL. 6.41
INV EL. 3.67 (S)

75
CB TYPE A 4' DIA, T1F OL (COC)
STA. 259+93.62, 30.01' LT
RIM EL. 6.80
INV EL. -1.35 (SE)

76
CB TYPE A 4' DIA, T1F OL (COC)
STA. 260+25.59, 24.05' RT
RIM EL. 6.60
INV EL. 2.10 (W)

77
MH TYPE C SINGLE-DROP,
3' DIA, T1F CL (COC)
STA. 260+27.50, 27.98' LT
RIM EL. 7.07
INV EL. -4.75 (E)
INV EL. 1.81 (EX N)

73
STORM SEWERS
TYPE 2, DIP
8" - 57' @ 0.54%
TBF - 7.0 CY

74
STORM SEWERS
TYPE 2, DIP
24" - 214' @ 0.20%
TBF - 30.0 CY

75
STORM SEWERS
TYPE 1, DIP
8" - 57' @ 0.54%
TBF - 6.0 CY

76
STORM SEWERS
TYPE 2, DIP
8" - 22' @ 1.00%
TBF - 3.0 CY

77
STORM SEWERS
TYPE 2, DIP
18" - 63' @ 0.26%
TBF - 94.0 CY

78
STORM SEWERS
TYPE 1, DIP
18" - 52' @ 0.26%
TBF - 1.0 CY

79
STORM SEWERS
TYPE 1, ESVCP
8" - 7' @ 0.54%
TBF - 2.0 CY

80
STORM SEWERS
TYPE 2, ESVCP
8" - 43' @ 0.60%
TBF - 5.0 CY

81
STORM SEWERS
TYPE 2, ESVCP
8" - 9' @ 0.60%
TBF - 3.0 CY

82
STORM SEWERS
TYPE 3, DIP
18" - 55' @ 0.50%
TBF - 87.0 CY

83
STORM SEWERS
TYPE 1, DIP
8" - 18' @ 0.60%
TBF - 3.0 CY

84
STORM SEWERS
TYPE 2, DIP
8" - 21' @ 0.54%
TBF - 19.0 CY

85
STORM SEWERS
TYPE 3, DIP
24" - 17' @ 0.50%
TBF - 30.0 CY

86
STORM SEWERS
TYPE 2, DIP
8" - 22' @ 0.60%
TBF - 6.0 CY

PLOT DATE: 5/17/2021
PLOT SCALE: 40.0000 ' / in.
FILE NAME: pw:\\CIVIL-PW-INT.civiltech.local:Civiltech Projects\Documents\Projects\3153\CAD\Sheets\D&U\20-plnpln\sht-du-010b.dgn

| | | | | |
|---|---|---|---|---|
| DESIGN: MSA | | | | |
| DRAWN: MSA | | | | |
| CHECKED: TKL | | | | |
| APPROVED: | NO. | BY | DATE | DESCRIPTION |
| DATE: 03/26/2021 | REVISIONS | | | |

CDOT CHICAGO DEPARTMENT OF TRANSPORTATION

C*NECT

DRAINAGE PLAN
NOTES
S. STONY ISLAND AVE.

JACKSON PARK MOBILITY IMPROVEMENTS

STA. 256+50 TO STA. 262+00

CONTRACT NO. -
PROJECT NO. B-7-203
SCALE: NONE

| TOTAL SHEETS | SHEET NO. |
|---|---|
| 1434 | 446 |

DRAWING NO. DRN-16

## EXISTING CONDITIONS

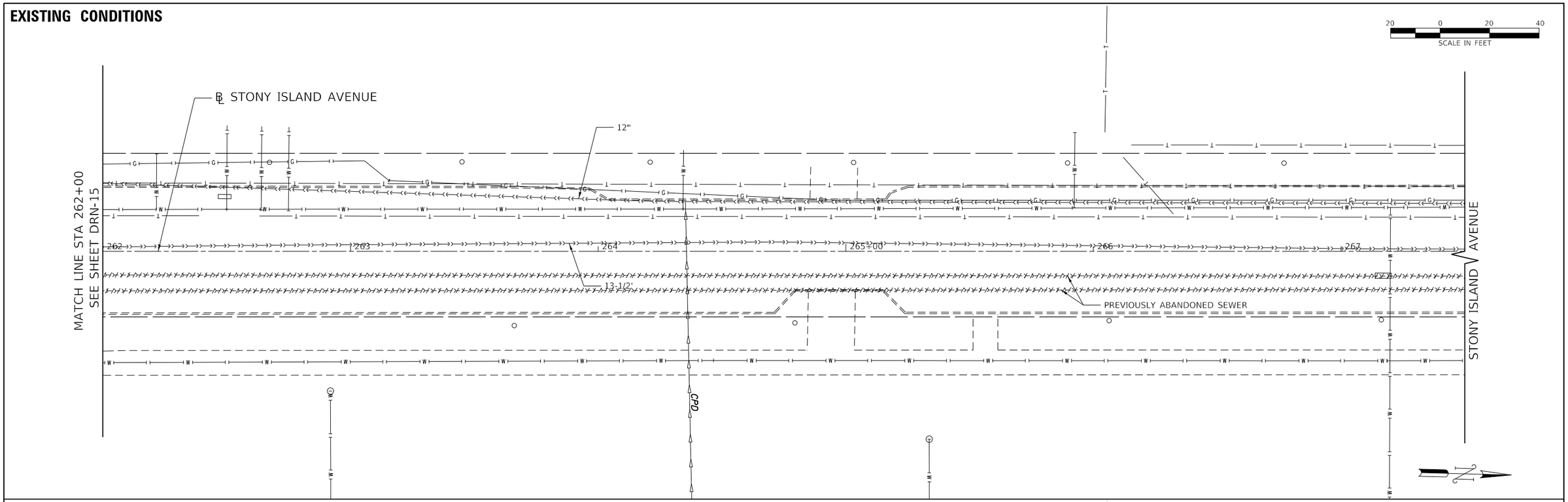


## PROPOSED CONDITIONS

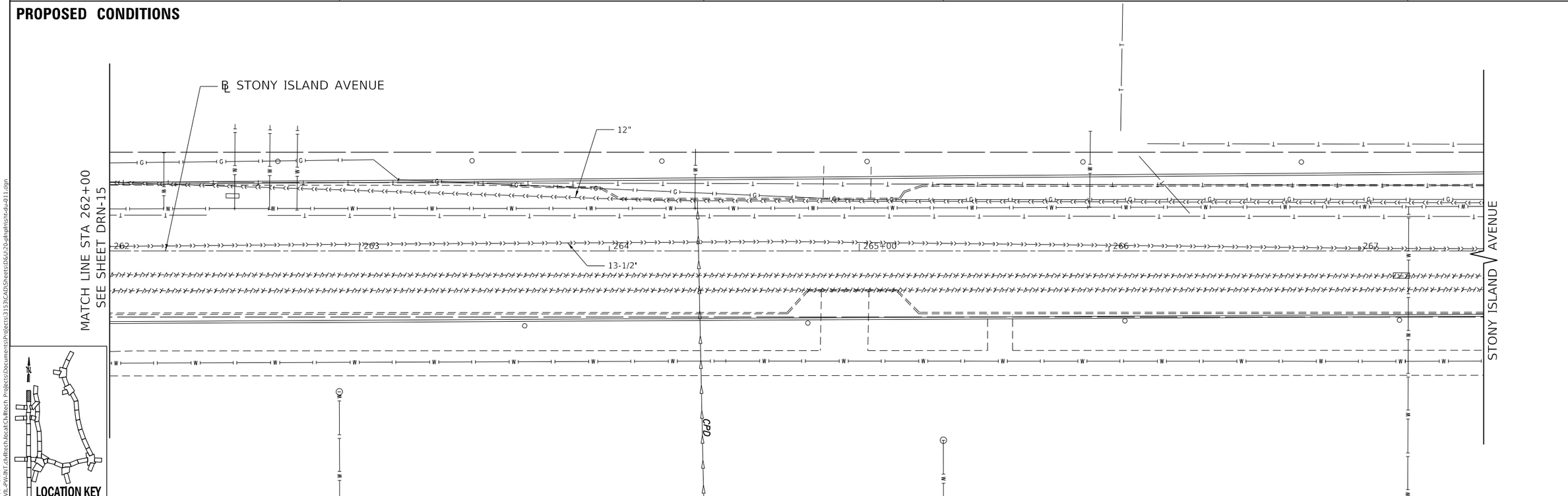





LOCATION KEY

| | | | | |
|---|---|---|---|---|
| DESIGN: MSA | | | $REV3 | |
| DRAWN: MSA | | | $REV2 | |
| CHECKED: TKL | | | $REV1 | |
| APPROVED: | NO. | BY | DATE | DESCRIPTION |
| DATE: 01/22/2021 | REVISIONS | | | |

CDOT CHICAGO DEPARTMENT OF TRANSPORTATION

C*NECT

DRAINAGE PLAN
EXISTING & PROPOSED CONDITIONS
S. STONY ISLAND AVE.

JACKSON PARK MOBILITY IMPROVEMENTS

STA. 262+00 TO STA. 267+50

CONTRACT NO. -
PROJECT NO. B-7-203
SCALE: 1"=20'

| TOTAL SHEETS | SHEET NO. |
|---|---|
| 1434 | 447 |

DRAWING NO. DRN-17

PLOT DATE: 5/17/2021
PLOT SCALE: 40.0000 ' / in.
FILE NAME: pw:\\CIVIL-PW-INT.civiltech.local:Civiltech Projects\Documents\Projects\3153\CAD\Sheets\D&U\20-plnpln\sht-du-011.dgn

## EXISTING CONDITIONS

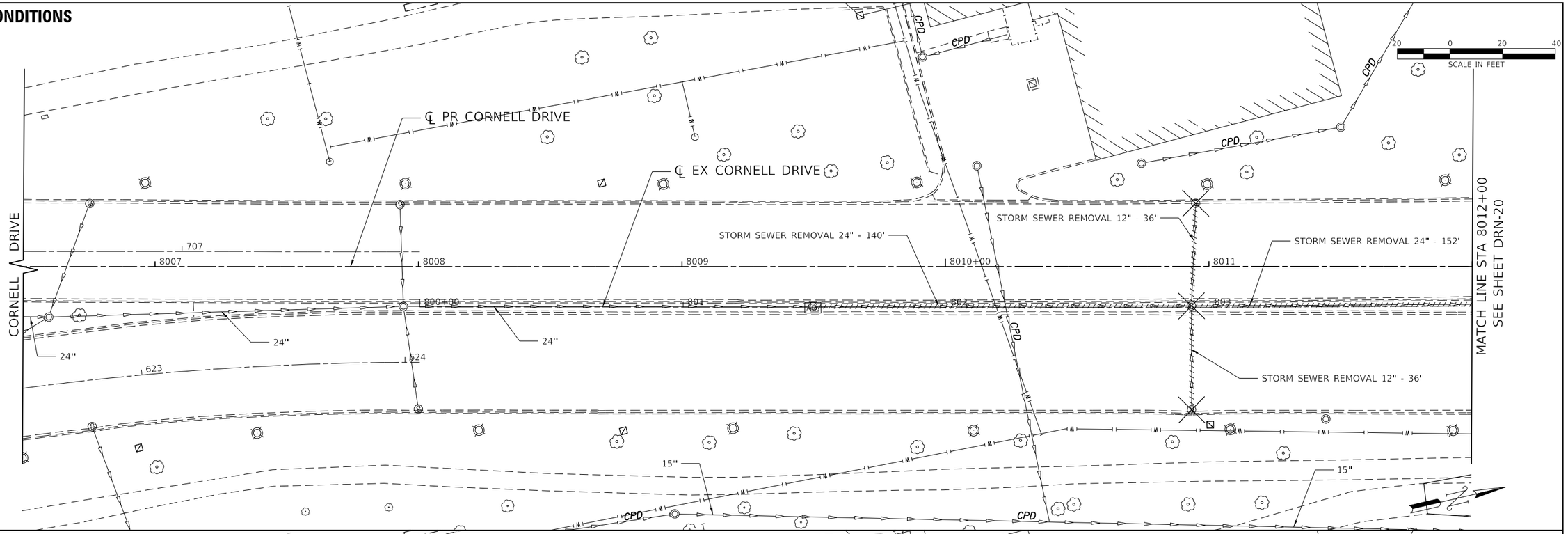


## PROPOSED CONDITIONS

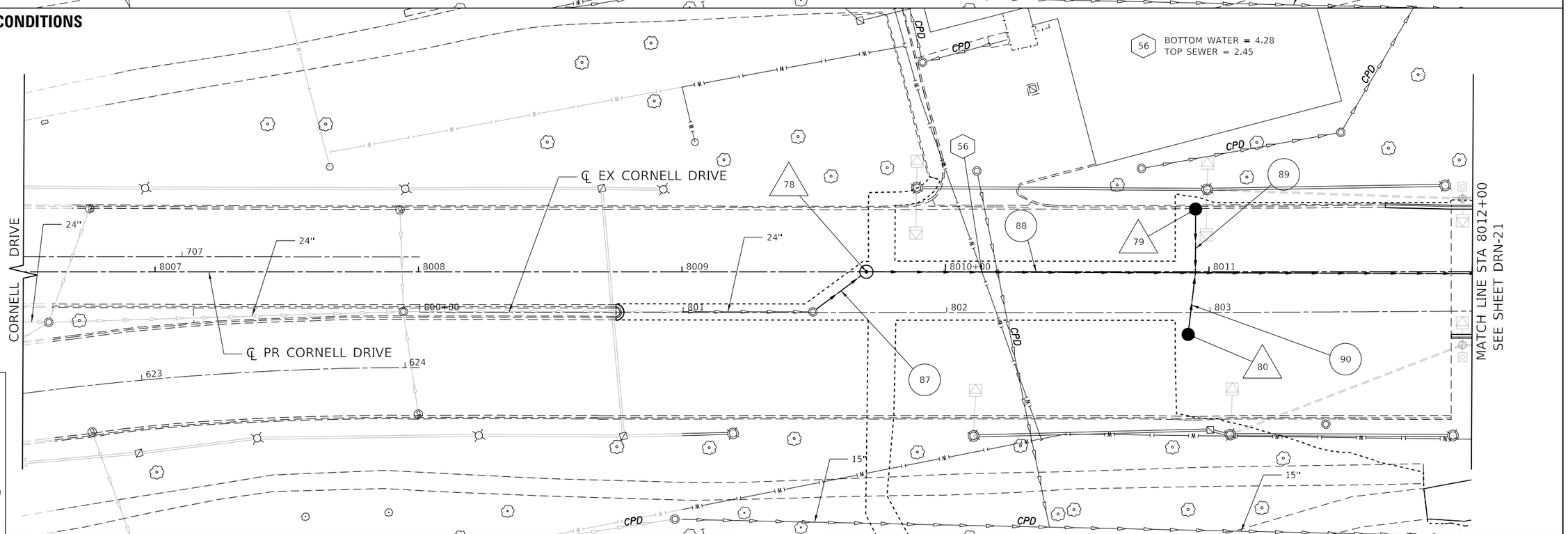


LOCATION KEY

| | | | | | |
|---|---|---|---|---|---|
| DESIGN: MSA | | | $REV3 | | |
| DRAWN: MSA | | | $REV2 | | |
| CHECKED: TKL | | | $REV1 | | |
| APPROVED: | NO. | BY | DATE | DESCRIPTION | |
| DATE: 01/22/2021 | REVISIONS | | | | |

CDOT CHICAGO DEPARTMENT OF TRANSPORTATION

C*NECT

**DRAINAGE PLAN**
**EXISTING & PROPOSED CONDITIONS**
**S. CORNELL DR.**

**JACKSON PARK MOBILITY IMPROVEMENTS**

STA. 8006+50 TO STA. 8012+00

| | |
|---|---|
| CONTRACT NO. - | TOTAL SHEETS 1434 / SHEET NO. 448 |
| PROJECT NO. B-7-203 | DRAWING NO. DRN-18 |
| SCALE: 1"=20' | |

PLOT DATE: 5/17/2021
PLOT SCALE: 40.0000 ' / in.
FILE NAME: pw:\\CIVIL-PW-INT-civiltech.local\CivilTech Projects\Documents\Projects\3153\CADD\Sheets\D&U\20-dnpln\sht-du-912.dgn

78

MH TYPE A 3' DIA, T1F CL (COC)
STA. 8009+70.00, 0.00' RT/LT
RIM EL. 10.06
INV EL. 0.56 (N)
INV EL. 2.04 (SE)

79

CB TYPE A 4' DIA, T1F OL (COC)
STA. 8010+94.98, 23.77' LT
RIM EL. 9.43
INV EL. 4.93 (E)

80

CB TYPE A 4' DIA, T1F OL (COC)
STA. 8010+92.12, 23.75' RT
RIM EL. 9.77
INV EL. 5.27 (W)

87

STORM SEWERS
TYPE 2, RCP
24" - 22' @ 0.36%
TBF - 20.0 CY

88

STORM SEWERS
TYPE 2, RCP
24" - 271' @ 0.29%
TBF - 333.0 CY

89

STORM SEWERS
TYPE 2, ESVCP
8" - 22' @ 1.00%
TBF - 19.0 CY

90

STORM SEWERS
TYPE 2, ESVCP
8" - 21' @ 1.00%
TBF - 19.0 CY

PLOT DATE: 5/17/2021
PLOT SCALE: 40.0000 ' / in.
FILE NAME: pw:\\CIVIL-PW-INT.civiltech.local:Civiltech Projects\Documents\Projects\3153\CAD\Sheets\D&U\20-plnpln\sht-du-012b.dgn

| | | | | |
|---|---|---|---|---|
| DESIGN: MSA | | | | |
| DRAWN: MSA | | | | |
| CHECKED: TKL | | | | |
| APPROVED: | NO. | BY | DATE | DESCRIPTION |
| DATE: 01/22/2021 | REVISIONS | | | |

CDOT CHICAGO DEPARTMENT OF TRANSPORTATION

C*NECT

DRAINAGE PLAN
NOTES
S. CORNELL DR.

JACKSON PARK MOBILITY IMPROVEMENTS

STA. 8006+50 TO STA. 8012+00

| | | |
|---|---|---|
| CONTRACT NO. - | TOTAL SHEETS 1434 | SHEET NO. 449 |
| PROJECT NO. B-7-203 | DRAWING NO. DRN-19 | |
| SCALE: NONE | | |

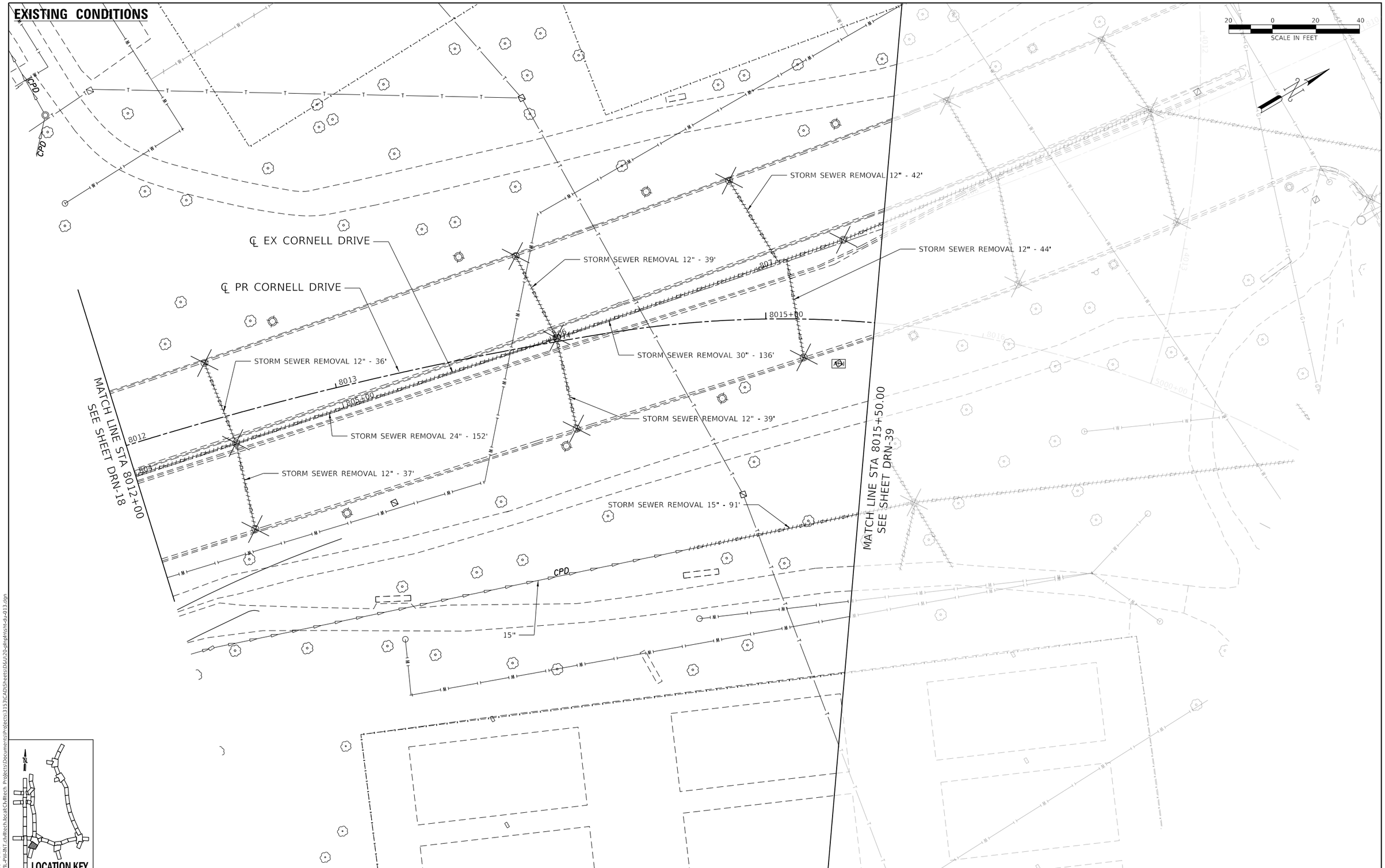


PLOT DATE: 5/17/2021
PLOT SCALE: 40.0000 ' / in.
FILE NAME: pw:\\CIVIL-PW-INT.civiltech.local:Civiltech Projects\Documents\Projects\3153\CAD\Sheets\D&U\20-plnpln\sht-du-013.dgn

| | | | | |
|---|---|---|---|---|
| DESIGN: MSA | | | | |
| DRAWN: MSA | | | | |
| CHECKED: TKL | | | | |
| APPROVED: | NO. | BY | DATE | DESCRIPTION |
| DATE: 01/22/2021 | REVISIONS | | | |

CDOT CHICAGO DEPARTMENT OF TRANSPORTATION

C*NECT

DRAINAGE PLAN
EXISTING CONDITIONS
S. CORNELL DR.

JACKSON PARK MOBILITY IMPROVEMENTS

STA. 8012+00 TO STA. 8015+00

CONTRACT NO. -
PROJECT NO. B-7-203
SCALE: 1"=20'

| TOTAL SHEETS | SHEET NO. |
|---|---|
| 1434 | 450 |

DRAWING NO. DRN-20

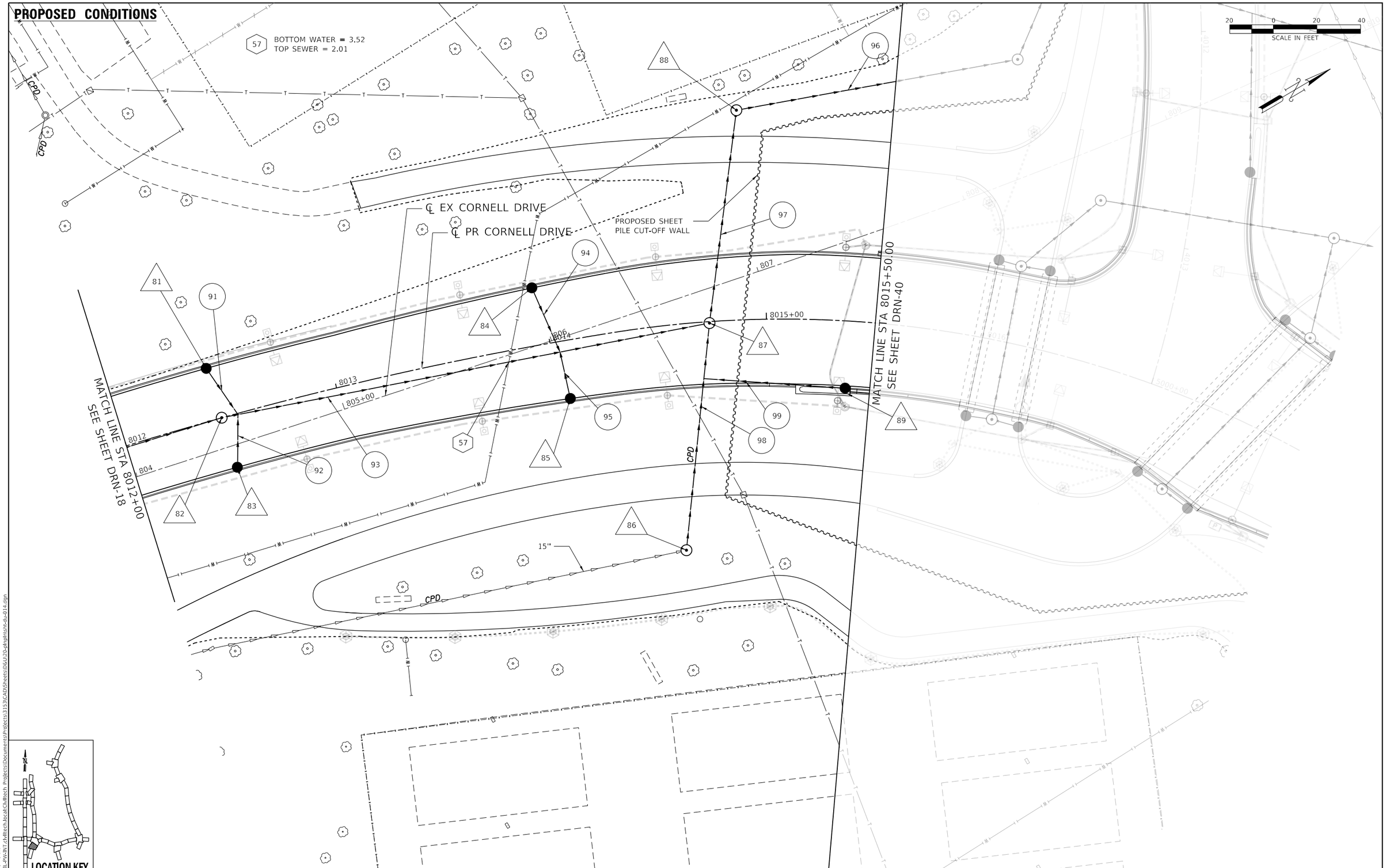


| | | | | |
|---|---|---|---|---|
| DESIGN: MSA | | | | |
| DRAWN: MSA | | | | |
| CHECKED: TKL | | | | |
| APPROVED: | NO. | BY | DATE | DESCRIPTION |
| DATE: 01/22/2021 | REVISIONS | | | |

CDOT CHICAGO DEPARTMENT OF TRANSPORTATION

C*NECT

DRAINAGE PLAN
PROPOSED CONDITIONS
S. CORNELL DR.

JACKSON PARK MOBILITY IMPROVEMENTS

STA. 8012+00 TO STA. 8015+00

| | | |
|---|---|---|
| CONTRACT NO. - | TOTAL SHEETS 1434 | SHEET NO. 451 |
| PROJECT NO. B-7-203 | DRAWING NO. DRN-21 | |
| SCALE: 1"=20' | | |

PLOT DATE: 5/17/2021
PLOT SCALE: 40.0000 ' / in.
FILE NAME: pw:\\CIVIL-PW-INT.civiltech.local:Civiltech Projects\Documents\Projects\3153\CAD\Sheets\D&U\20-plnpln\sht-du-014.dgn

81

CB TYPE A 4' DIA, T1F OL (COC)
STA. 8012+44.84, 23.75' LT
RIM EL. 8.91
INV EL. 4.41 (E)

87

MH TYPE B 3' DIA, T1F CL (COC)
STA. 8014+74.64, 0.00' RT/LT
RIM EL. 12.47
INV EL. 0.48 (SE)
INV EL. -0.76 (NW/SW)

82

MH TYPE A 3' DIA, T1F CL (COC)
STA. 8012+45.59, 0.00' RT/LT
RIM EL. 9.38
INV EL. -0.23 (N/S)

88

MH TYPE B 3' DIA, T1F CL (COC)
STA. 8014+92.74, 91.10' LT
RIM EL. 8.14
INV EL. -1.00 (N/SE)

83

CB TYPE A 4' DIA, T1F OL (COC)
STA. 8012+46.40, 23.75' RT
RIM EL. 8.91
INV EL. 4.41 (W)

89

CB TYPE A 4' DIA, T1F OL (COC)
STA. 8015+38.01, 30.81' RT
RIM EL. 13.63
INV EL. 9.13 (SW)

84

CB TYPE A 4' DIA, T1F OL (COC)
STA. 8013+96.33, 26.45' LT
RIM EL. 9.88
INV EL. 5.38 (E)

85

CB TYPE A 4' DIA, T1F OL (COC)
STA. 8014+04.86, 26.59' RT
RIM EL. 10.07
INV EL. 5.57 (W)

86

MH TYPE B 3' DIA, T1F CL (COC)
STA. 8014+65.72, 102.29' RT
RIM EL. 9.83
INV EL. 0.73 (EX S/NW)

91

STORM SEWERS
TYPE 2, ESVCP
8" - 24' @ 1.00%
TBF - 6.0 CY

97

STORM SEWERS
TYPE 2, RCP
30" - 93' @ 0.26%
TBF - 152.0 CY

92

STORM SEWERS
TYPE 2, ESVCP
8" - 22' @ 1.00%
TBF - 6.0 CY

98

STORM SEWERS
TYPE 2, ESVCP
15" - 100' @ 0.25%
TBF - 131.0 CY

93

STORM SEWERS
TYPE 2, DIP
30" - 228' @ 0.23%
TBF - 384.0 CY

99

STORM SEWERS
TYPE 2, DIP
8" - 63' @ 0.54%
TBF - 50 CY

94

STORM SEWERS
TYPE 2, ESVCP
8" - 30' @ 1.00%
TBF - 30.0 CY

95

STORM SEWERS
TYPE 2, ESVCP
8" - 19' @ 1.00%
TBF - 19.0 CY

96

STORM SEWERS
TYPE 2, RCP
30" - 126' @ 0.14%
TBF - 0.0 CY

PLOT DATE: 5/17/2021
PLOT SCALE: 40.0000 ' / in.
FILE NAME: pw:\\CIVIL-PW-NT.dwltech.local:CivilTech Projects\Documents\Projects\3153\CADDSheets\DGN\20-drnplnnt-dsgn1-4b.dgn

| | | | | |
|---|---|---|---|---|
| DESIGN: MSA | | | | |
| DRAWN: MSA | | | | |
| CHECKED: TKL | | | | |
| APPROVED: | NO. | BY | DATE | DESCRIPTION |
| DATE: 01/22/2021 | REVISIONS | | | |

CDOT CHICAGO DEPARTMENT OF TRANSPORTATION

C*NECT

DRAINAGE PLAN
NOTES
S. CORNELL DR.

JACKSON PARK MOBILITY IMPROVEMENTS

STA. 8012+00 TO STA. 8015+00

| | | |
|---|---|---|
| CONTRACT NO. - | TOTAL SHEETS | SHEET NO. |
| PROJECT NO. B-7-203 | 1434 | 452 |
| SCALE: NONE | DRAWING NO. DRN-22 | |

## EXISTING CONDITIONS

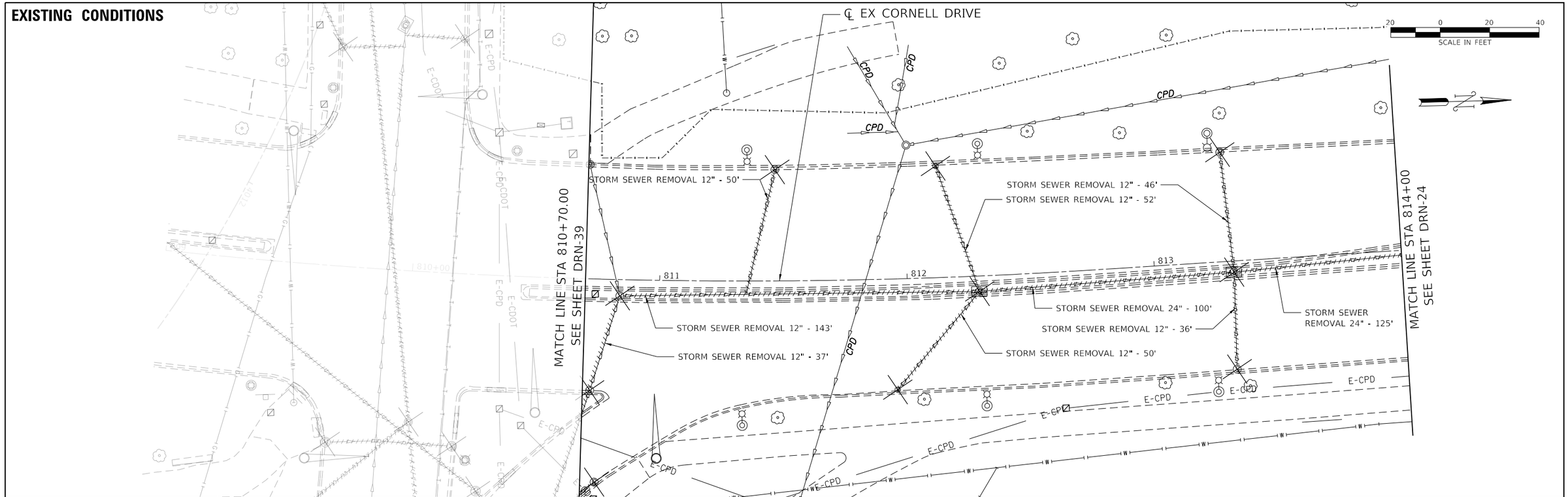


## PROPOSED CONDITIONS

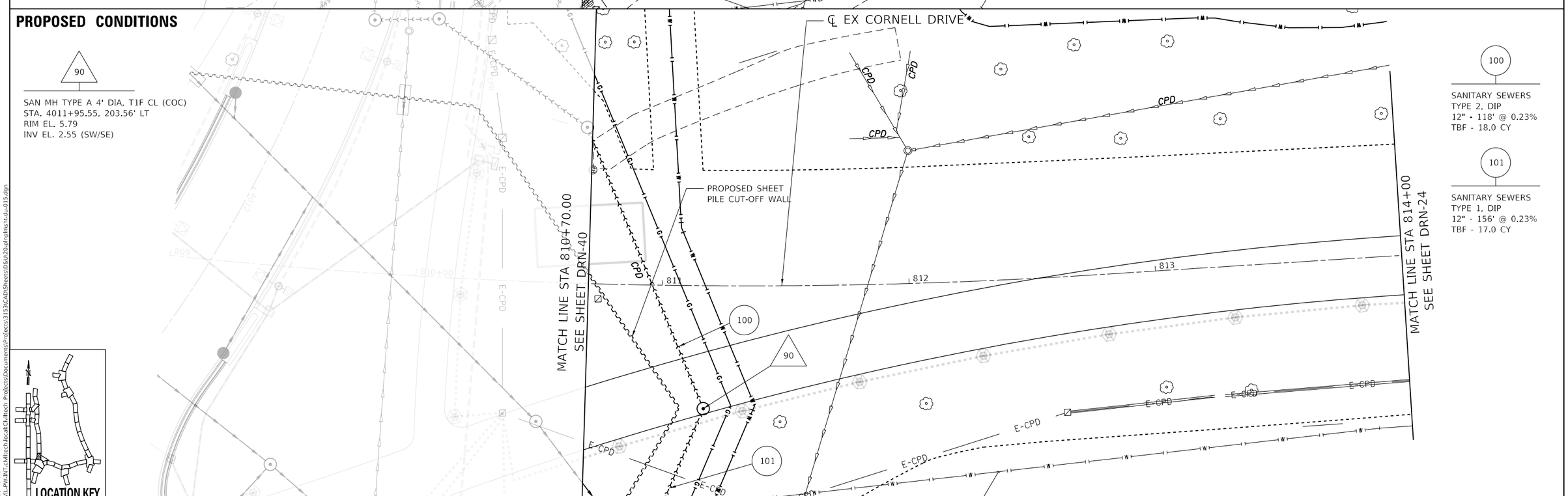


| | | | | | |
|---|---|---|---|---|---|
| DESIGN: MSA | | | $REV3 | | |
| DRAWN: MSA | | | $REV2 | | |
| CHECKED: TKL | | | $REV1 | | |
| APPROVED: | NO. | BY | DATE | DESCRIPTION | |
| DATE: 01/22/2021 | REVISIONS | | | | |

CDOT CHICAGO DEPARTMENT OF TRANSPORTATION

C*NECT

DRAINAGE PLAN
EXISTING & PROPOSED CONDITIONS
S. CORNELL DR.

JACKSON PARK MOBILITY IMPROVEMENTS

STA. 810+70 TO STA. 814+00

CONTRACT NO. -
PROJECT NO. B-7-203
SCALE: 1"=20'

| TOTAL SHEETS | SHEET NO. |
|---|---|
| 1434 | 453 |

DRAWING NO. DRN-23

PLOT DATE: 5/17/2021
PLOT SCALE: 40.0000 ' / in.
FILE NAME: pw:\\CIVIL-PW-INT.civiltech.local:Civiltech Projects\Documents\Projects\3153\CAD\Sheets\D&U\20-plnpln\sht-du-015.dgn

## EXISTING CONDITIONS

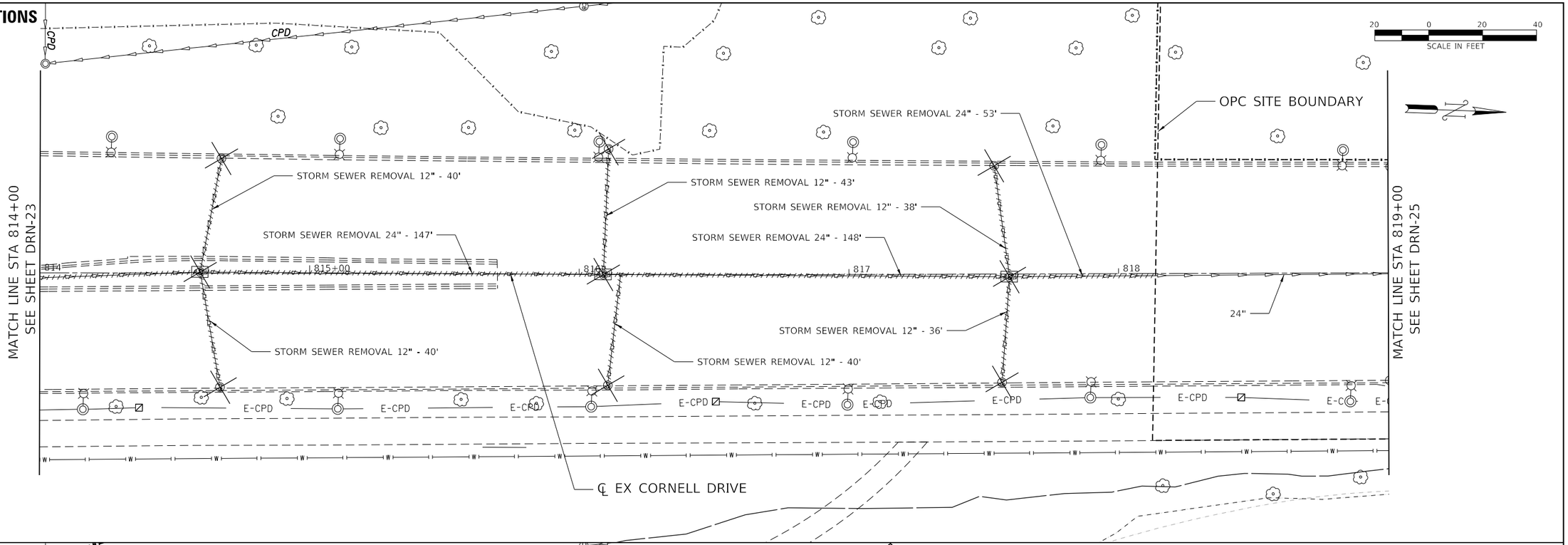


## PROPOSED CONDITIONS

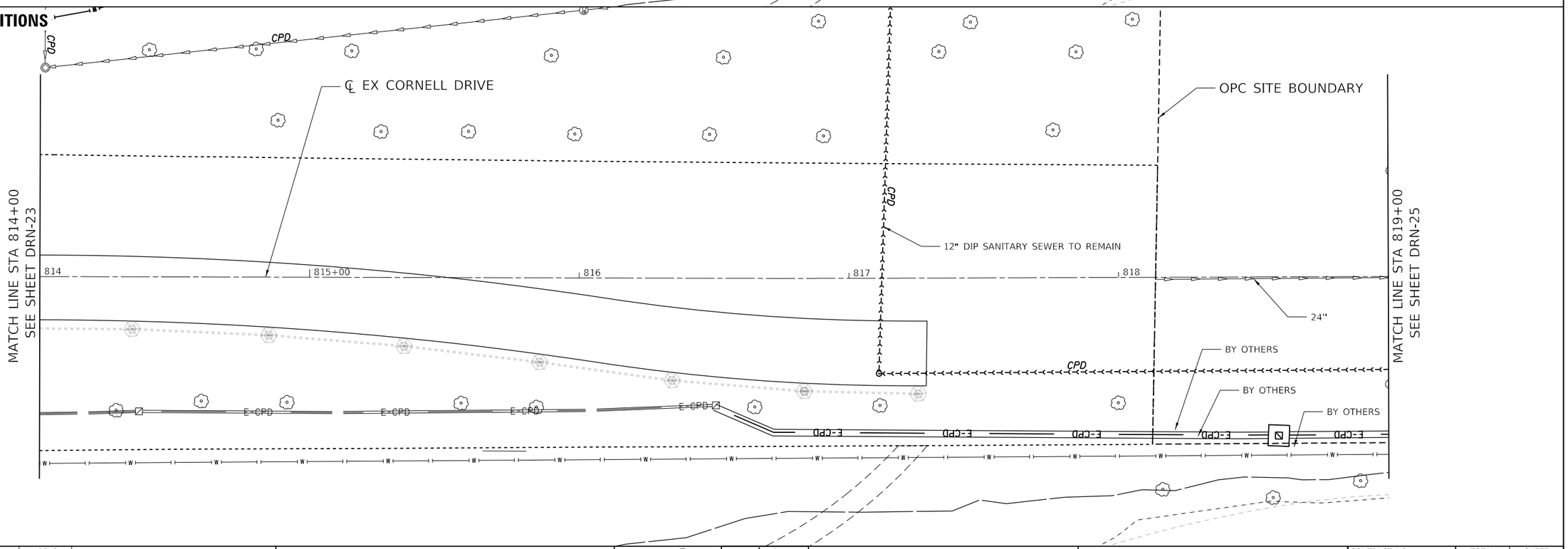


| | | | | | |
|---|---|---|---|---|---|
| DESIGN: | MSA | | | SREV3 | |
| DRAWN: | MSA | | | SREV2 | |
| CHECKED: | TKL | | | SREV1 | |
| APPROVED: | | NO. | BY | DATE | DESCRIPTION |
| DATE: 01/22/2021 | | REVISIONS | | | |

CDOT CHICAGO DEPARTMENT OF TRANSPORTATION

C*NECT

DRAINAGE PLAN
EXISTING & PROPOSED CONDITIONS
S. CORNELL DR.

JACKSON PARK MOBILITY IMPROVEMENTS

STA. 814+00 TO STA. 819+00

CONTRACT NO. -
PROJECT NO. B-7-203
SCALE: 1"=20'

| TOTAL SHEETS | SHEET NO. |
|---|---|
| 1434 | 454 |

DRAWING NO. DRN-24

PLOT DATE: 5/17/2021
PLOT SCALE: 40.0000 ' / in.
FILE NAME: pw:\\CIVIL-PW-INT.civiltech.local:Civiltech Projects\Documents\Projects\3153\CAD\Sheets\D&U\20-plnpln\sht-du-016.dgn

## EXISTING CONDITIONS

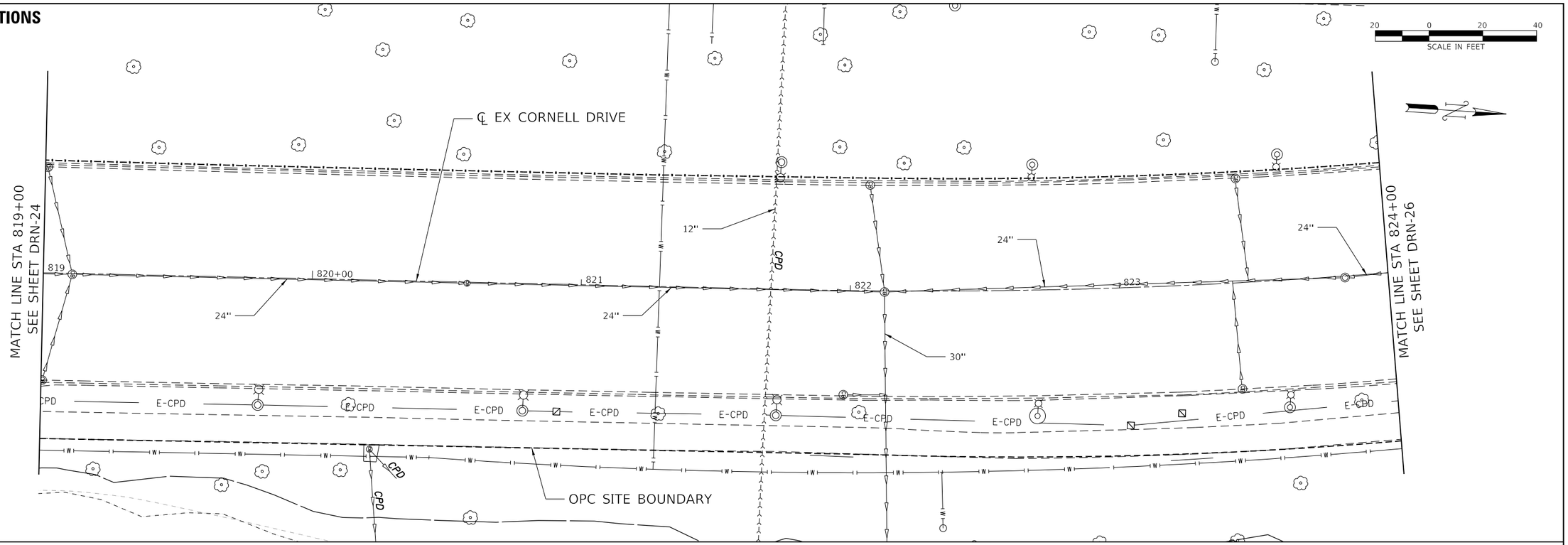


## PROPOSED CONDITIONS

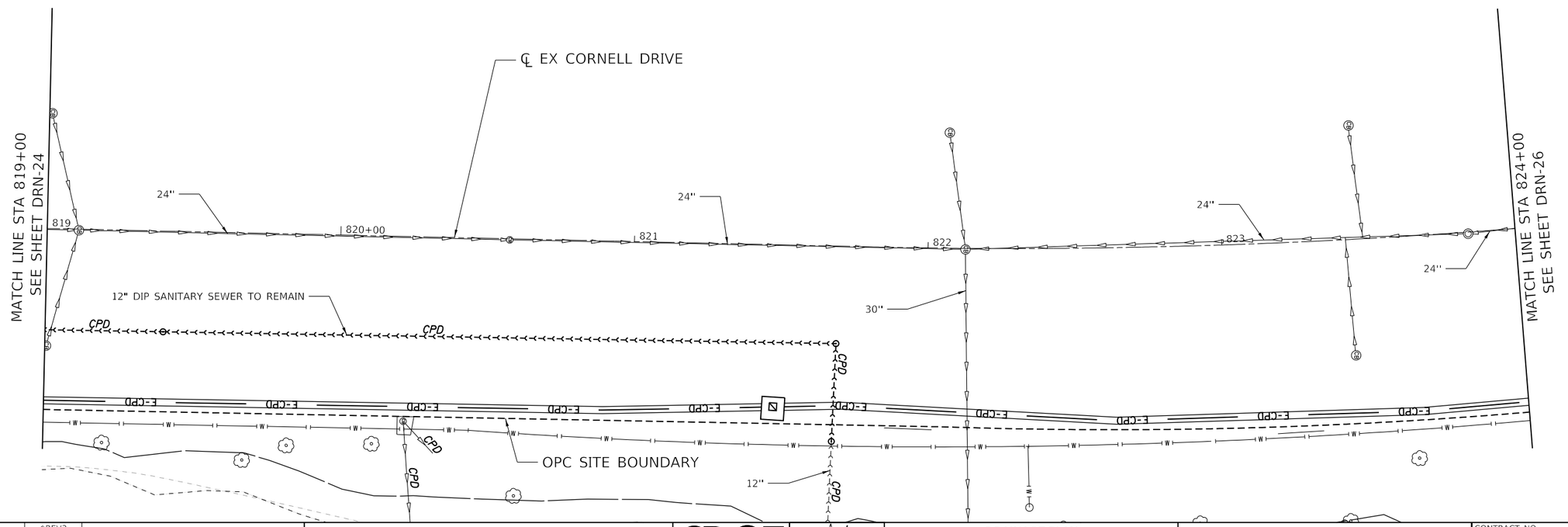


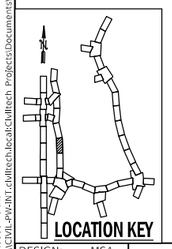


| | | | | | |
|---|---|---|---|---|---|
| DESIGN: MSA | | | | ŞREV3 | |
| DRAWN: MSA | | | | ŞREV2 | |
| CHECKED: TKL | | | | ŞREV1 | |
| APPROVED: | NO. | BY | DATE | DESCRIPTION | |
| DATE: 01/22/2021 | REVISIONS | | | | |

CDOT CHICAGO DEPARTMENT OF TRANSPORTATION

C*NECT

**DRAINAGE PLAN**
**EXISTING & PROPOSED CONDITIONS**
**S. CORNELL DR.**

**JACKSON PARK MOBILITY IMPROVEMENTS**

STA. 819+00 TO STA. 824+00

| | |
|---|---|
| CONTRACT NO. - | |
| PROJECT NO. B-7-203 | |
| SCALE: 1"=20' | |

| TOTAL SHEETS | SHEET NO. |
|---|---|
| 1434 | 455 |
| DRAWING NO. DRN-25 | |

PLOT DATE: 5/17/2021
PLOT SCALE: 40.0000 ' / in.
FILE NAME: pw:\\CIVIL-PW-INT.cloudtech.local:CivilTech Projects\Documents\Projects\3153\CADDSheets\DGU\20-drnplnsht-du-017.dgn

## EXISTING CONDITIONS

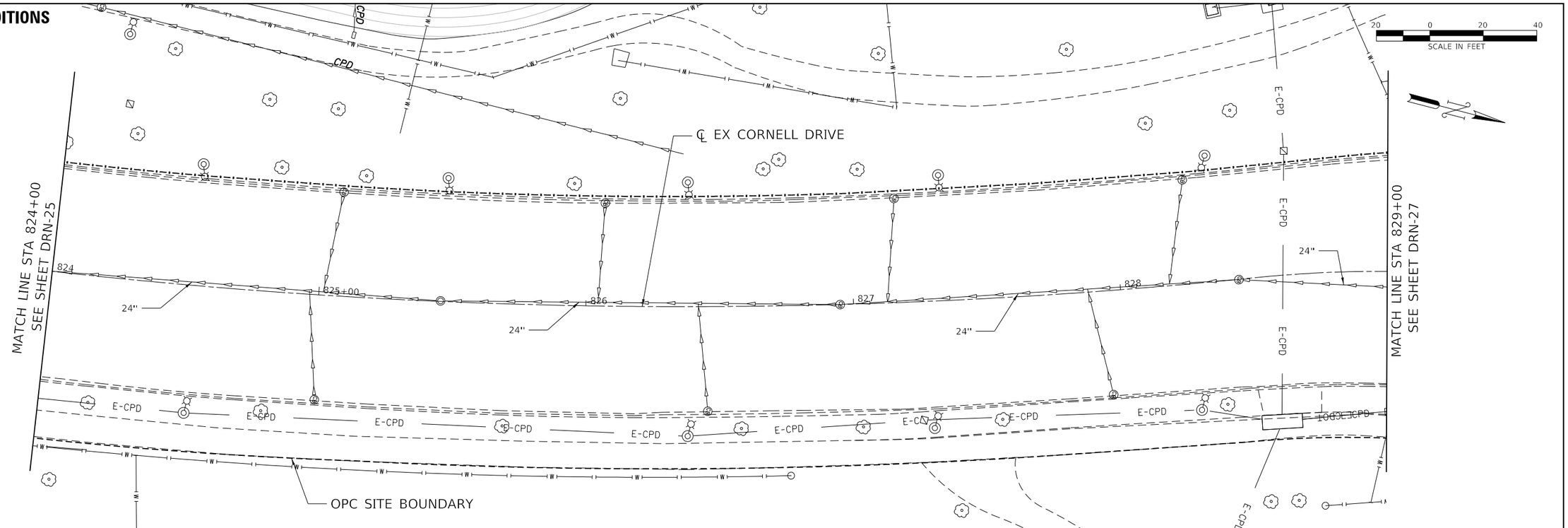


## PROPOSED CONDITIONS

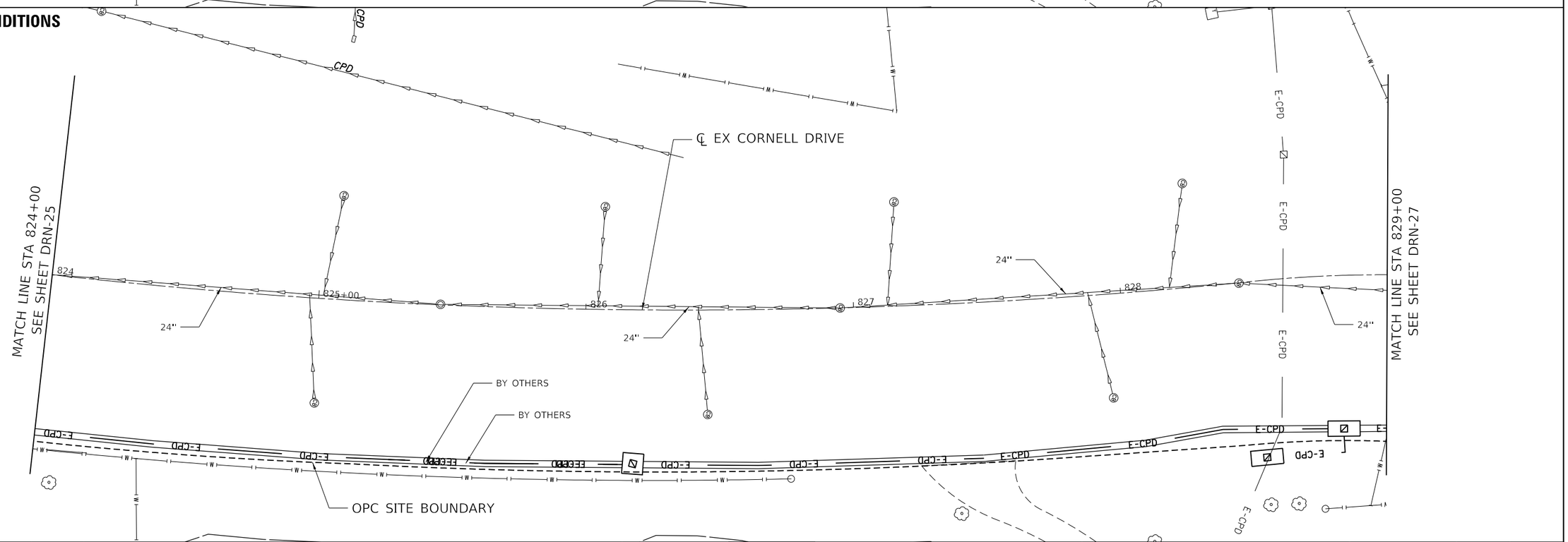





PLOT DATE: 5/17/2021
PLOT SCALE: 40.0000 ' / in.
FILE NAME: pw:\\CIVIL-PW-INT.civiltech.local:Civiltech Projects\Documents\Projects\3153\CAD\Sheets\D&U\20-plnpln\sht-du-018.dgn

| | | | | | |
|---|---|---|---|---|---|
| DESIGN: | MSA | | | $REV3 | |
| DRAWN: | MSA | | | $REV2 | |
| CHECKED: | TKL | | | $REV1 | |
| APPROVED: | | NO. | BY | DATE | DESCRIPTION |
| DATE: 01/22/2021 | | REVISIONS | | | |

CDOT CHICAGO DEPARTMENT OF TRANSPORTATION

C*NECT

DRAINAGE PLAN
EXISTING & PROPOSED CONDITIONS
S. CORNELL DR.

JACKSON PARK MOBILITY IMPROVEMENTS

STA. 824+00 TO STA. 829+00

| | | | |
|---|---|---|---|
| CONTRACT NO. - | TOTAL SHEETS | SHEET NO. |
| PROJECT NO. B-7-203 | 1434 | 456 |
| SCALE: 1"=20' | DRAWING NO. DRN-26 | |

## EXISTING CONDITIONS

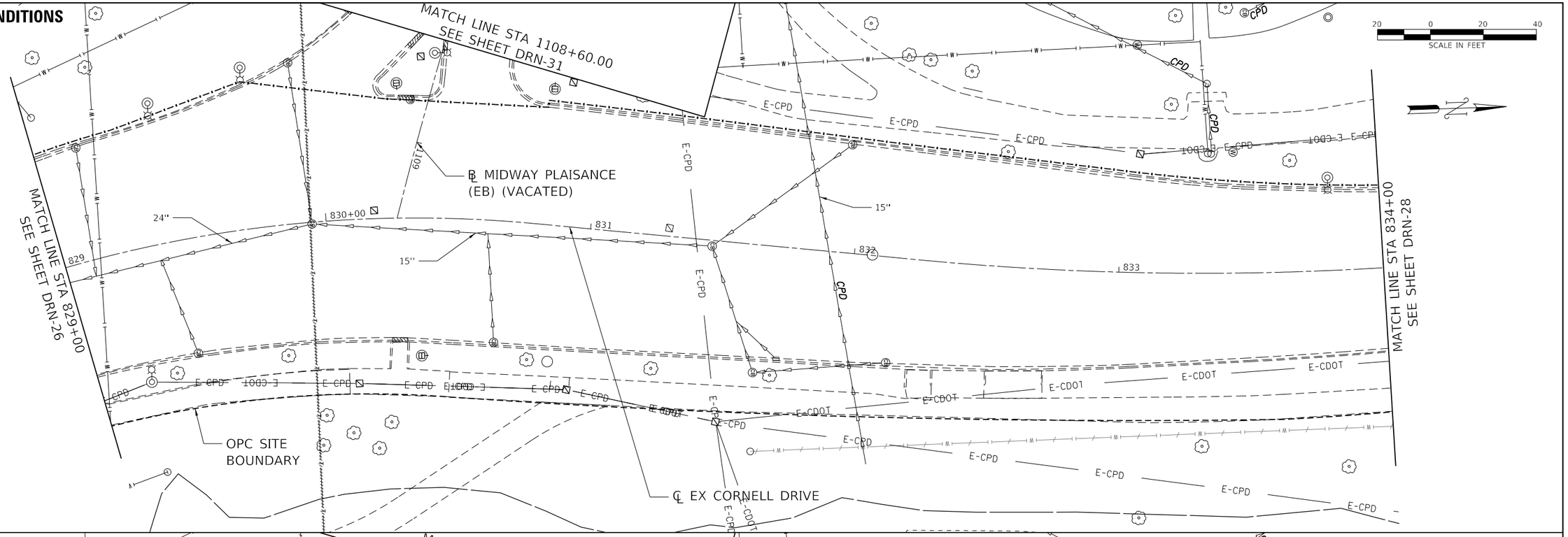


## PROPOSED CONDITIONS

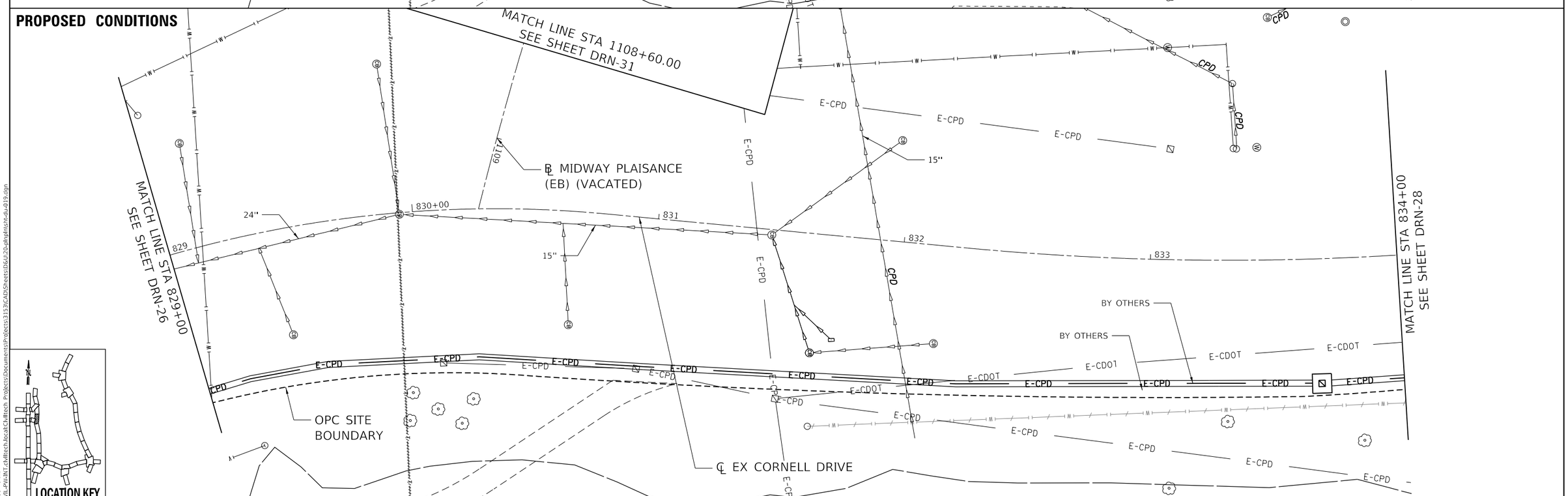


PLOT DATE: 5/17/2021
PLOT SCALE: 40.0000 ' / in.
FILE NAME: pw:\\CIVIL-PW-INT.civiltech.local:Civiltech Projects\Documents\Projects\3153\CAD\Sheets\D&U\20-plnpln\sht-du-019.dgn

| | | | | | |
|---|---|---|---|---|---|
| DESIGN: | MSA | | | SREV3 | |
| DRAWN: | MSA | | | SREV2 | |
| CHECKED: | TKL | | | SREV1 | |
| APPROVED: | | NO. | BY | DATE | DESCRIPTION |
| DATE: 01/22/2021 | | | | REVISIONS | |

CDOT CHICAGO DEPARTMENT OF TRANSPORTATION

C*NECT

DRAINAGE PLAN
EXISTING & PROPOSED CONDITIONS
S. CORNELL DR.

JACKSON PARK MOBILITY IMPROVEMENTS

STA. 829+00 TO STA. 834+00

| | | |
|---|---|---|
| CONTRACT NO. - | TOTAL SHEETS 1434 | SHEET NO. 457 |
| PROJECT NO. B-7-203 | DRAWING NO. DRN-27 | |
| SCALE: 1"=20' | | |

## EXISTING CONDITIONS

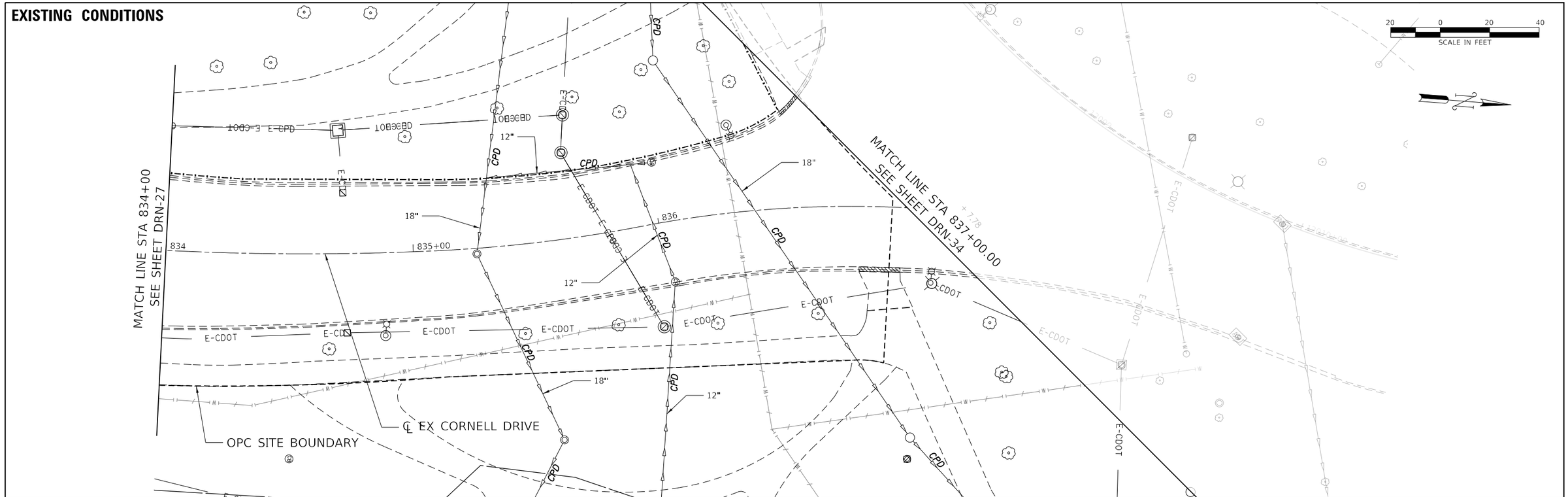


## PROPOSED CONDITIONS

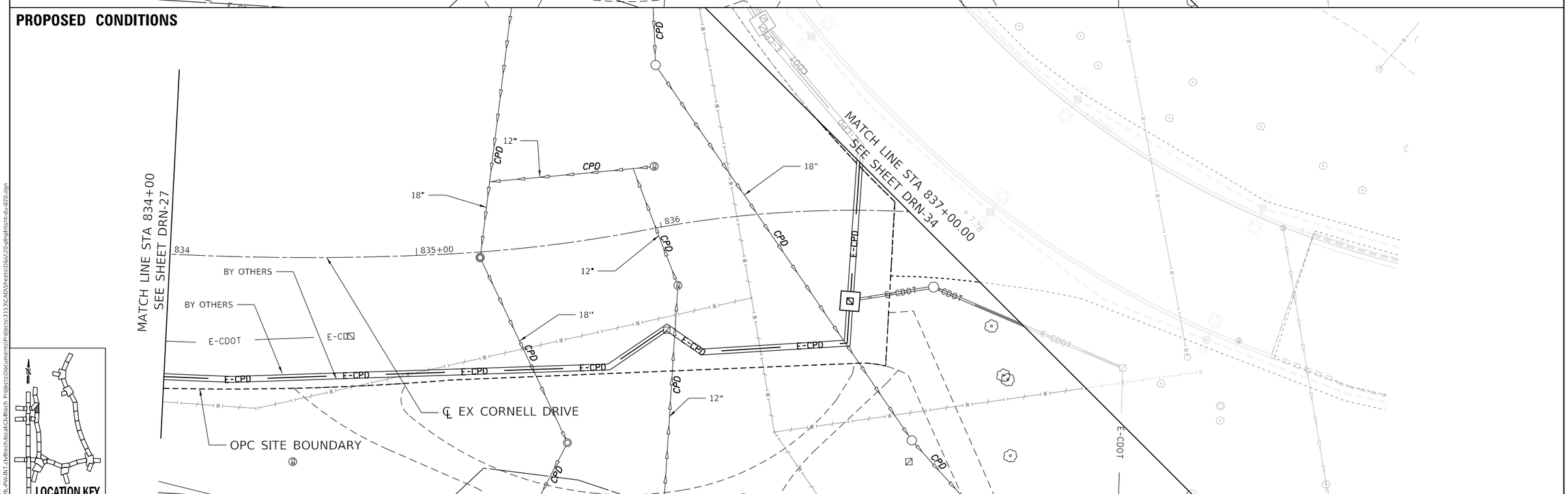





PLOT DATE: 5/17/2021
PLOT SCALE: 40.0000 ' / in.
FILE NAME: pw:\\CIVIL-PW-INT.civiltech.local:Civiltech Projects\Documents\Projects\3153\CAD\Sheets\D&U\20-plnpln\sht-du-020.dgn

| | | | | |
|---|---|---|---|---|
| DESIGN: MSA | | | $REV3 | |
| DRAWN: MSA | | | $REV2 | |
| CHECKED: TKL | | | $REV1 | |
| APPROVED: | NO. | BY | DATE | DESCRIPTION |
| DATE: 01/22/2021 | REVISIONS | | | |

CDOT CHICAGO DEPARTMENT OF TRANSPORTATION

C*NECT

DRAINAGE PLAN
EXISTING & PROPOSED CONDITIONS
S. CORNELL DR.

JACKSON PARK MOBILITY IMPROVEMENTS

STA. 834+00 TO STA. 837+00

| | | |
|---|---|---|
| CONTRACT NO. - | TOTAL SHEETS 1434 | SHEET NO. 458 |
| PROJECT NO. B-7-203 | DRAWING NO. DRN-28 | |
| SCALE: 1"=20' | | |

## EXISTING CONDITIONS

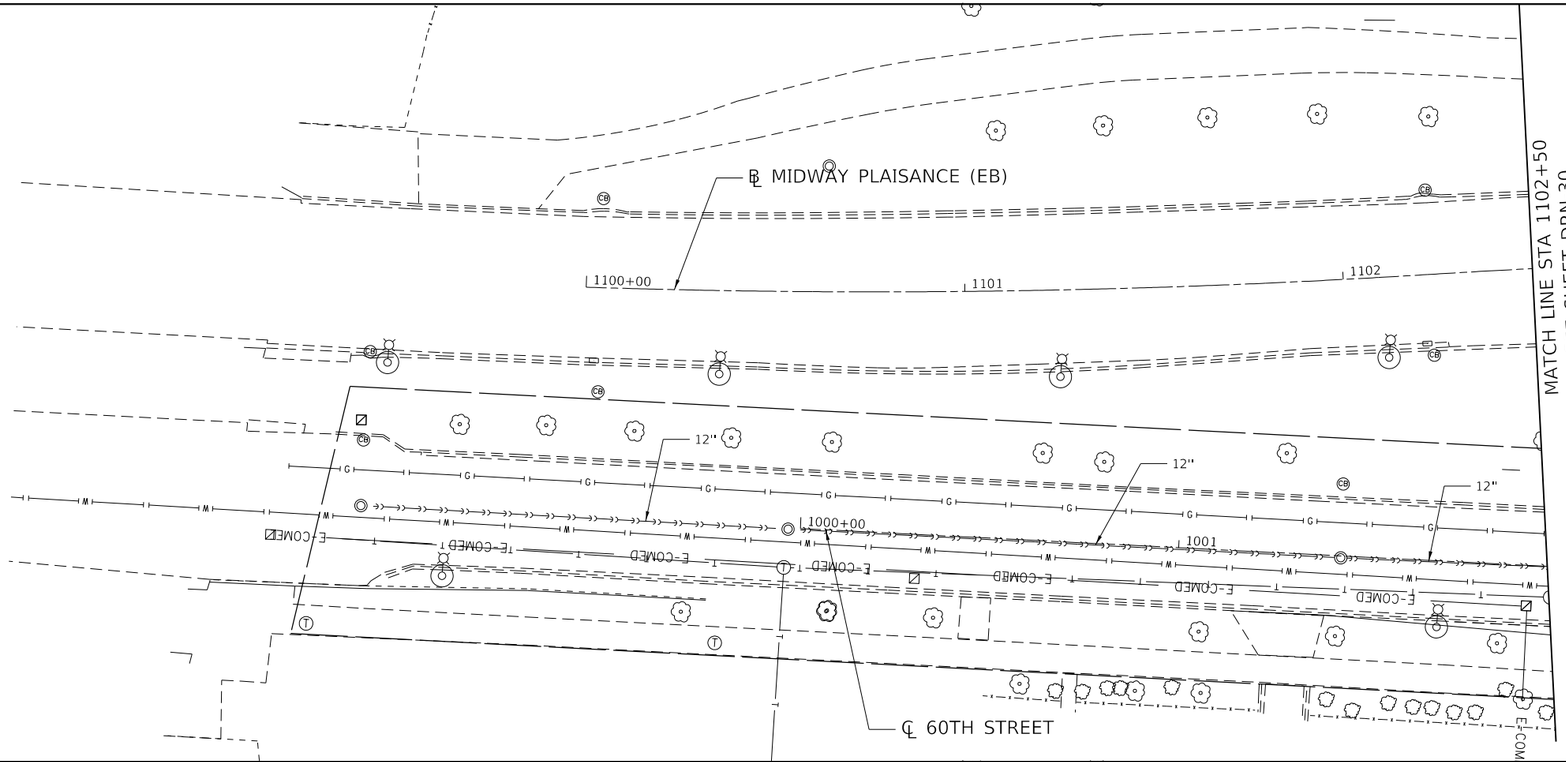


20 0 20 40
SCALE IN FEET

N

## PROPOSED CONDITIONS

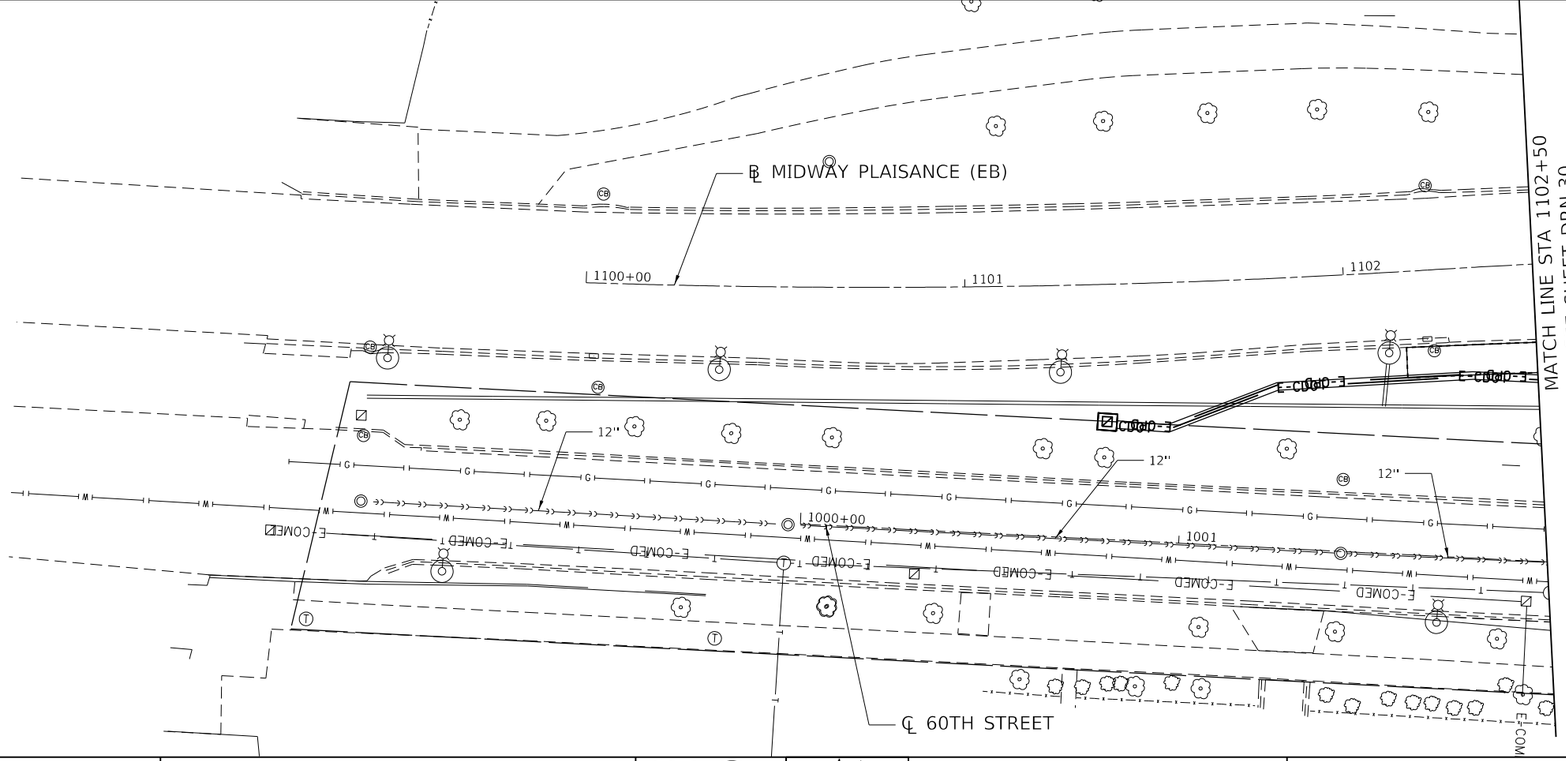


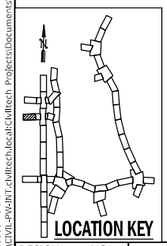


| | | | | | |
|---|---|---|---|---|---|
| DESIGN: MSA | | | $REV3 | | |
| DRAWN: MSA | | | $REV2 | | |
| CHECKED: TKL | | | $REV1 | | |
| APPROVED: | NO. | BY | DATE | DESCRIPTION | |
| DATE: 01/22/2021 | REVISIONS | | | | |

CDOT CHICAGO DEPARTMENT OF TRANSPORTATION

C*NECT

**DRAINAGE PLAN**
**EXISTING & PROPOSED CONDITIONS**
**E. MIDWAY PLAISANCE (S)**

**JACKSON PARK MOBILITY IMPROVEMENTS**

STA. 1100+00 TO STA. 1102+50

| | |
|---|---|
| CONTRACT NO. | - |
| PROJECT NO. | B-7-203 |
| SCALE: 1"=20' | |

| TOTAL SHEETS | SHEET NO. |
|---|---|
| 1434 | 459 |

DRAWING NO. **DRN-29**

PLOT DATE: 5/17/2021
PLOT SCALE: 40.0000 ' / in.
FILE NAME: pw:\\CTVL-PW-INT.cdot.tech.local\CivilTech Projects\Documents\Projects\3133\CADSheets\D&U\20-plnpln\sht-du-021.dgn

## EXISTING CONDITIONS

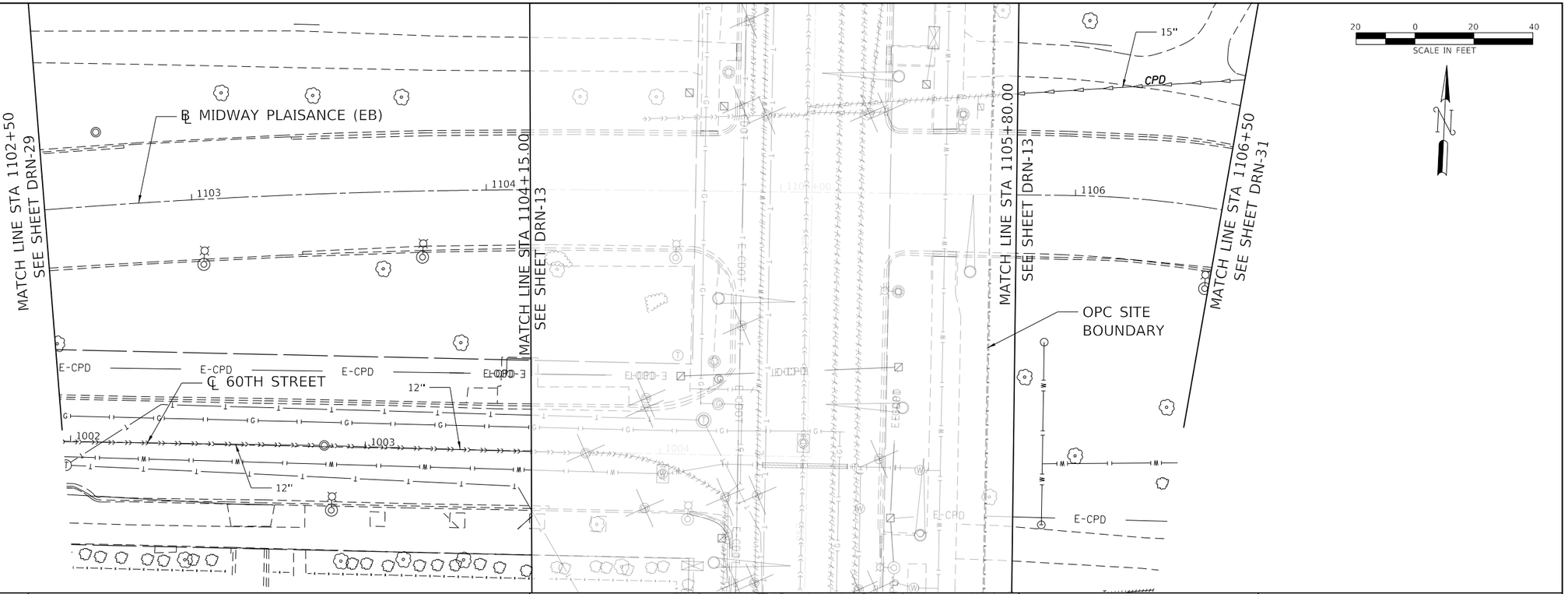


## PROPOSED CONDITIONS

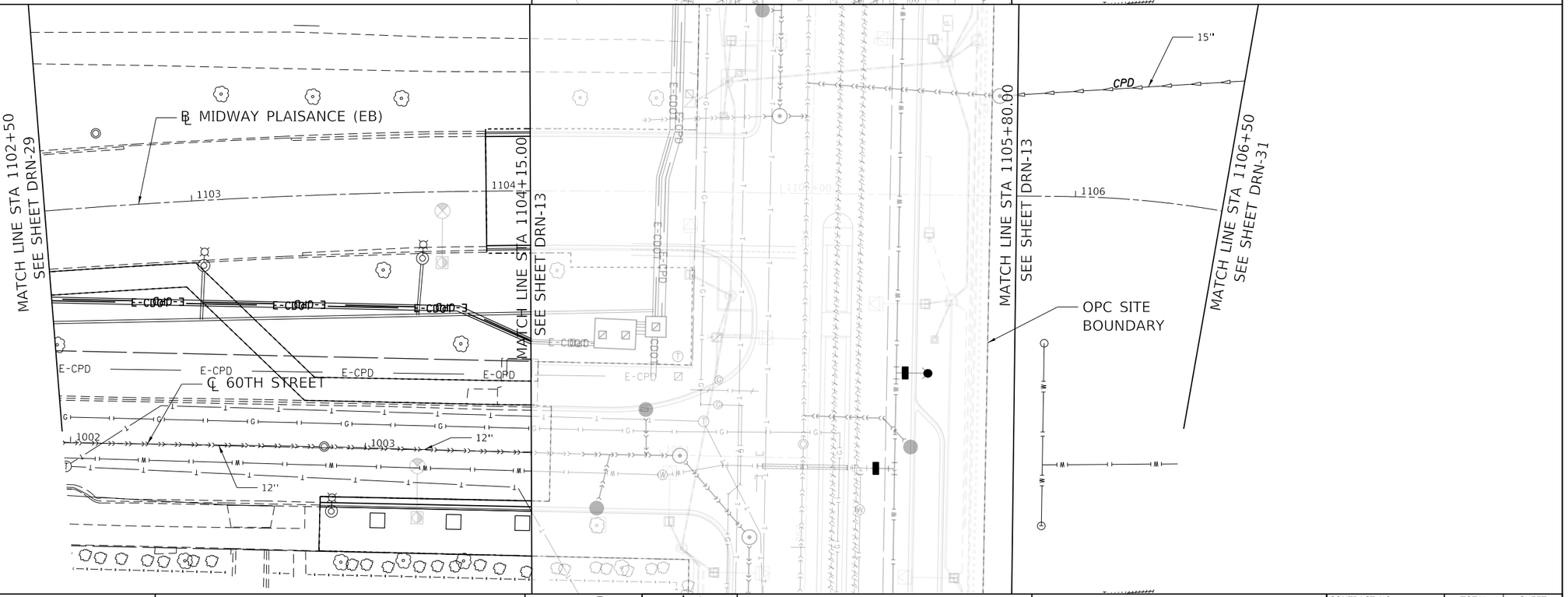


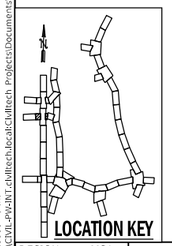


LOCATION KEY

| | | | | | |
|---|---|---|---|---|---|
| DESIGN: MSA | | | $REV3 | | |
| DRAWN: MSA | | | $REV2 | | |
| CHECKED: TKL | | | $REV1 | | |
| APPROVED: | NO. | BY | DATE | DESCRIPTION | |
| DATE: 01/22/2021 | REVISIONS | | | | |

CDOT CHICAGO DEPARTMENT OF TRANSPORTATION

C*NECT

DRAINAGE PLAN
EXISTING & PROPOSED CONDITIONS
E. MIDWAY PLAISANCE (S)

JACKSON PARK MOBILITY IMPROVEMENTS

STA. 1102+50 TO STA. 1106+50

| | | | |
|---|---|---|---|
| CONTRACT NO. - | TOTAL SHEETS | SHEET NO. | |
| PROJECT NO. B-7-203 | 1434 | 460 | |
| SCALE: 1"=20' | DRAWING NO. DRN-30 | | |

PLOT DATE: 5/17/2021
PLOT SCALE: 40.0000 ' / in.
FILE NAME: pw:\\CIVIL-PW-INT.civiltech.local:Civiltech Projects\Documents\Projects\3153\CAD\Sheets\D&U\20-plnpln\sht-du-022.dgn

## EXISTING CONDITIONS

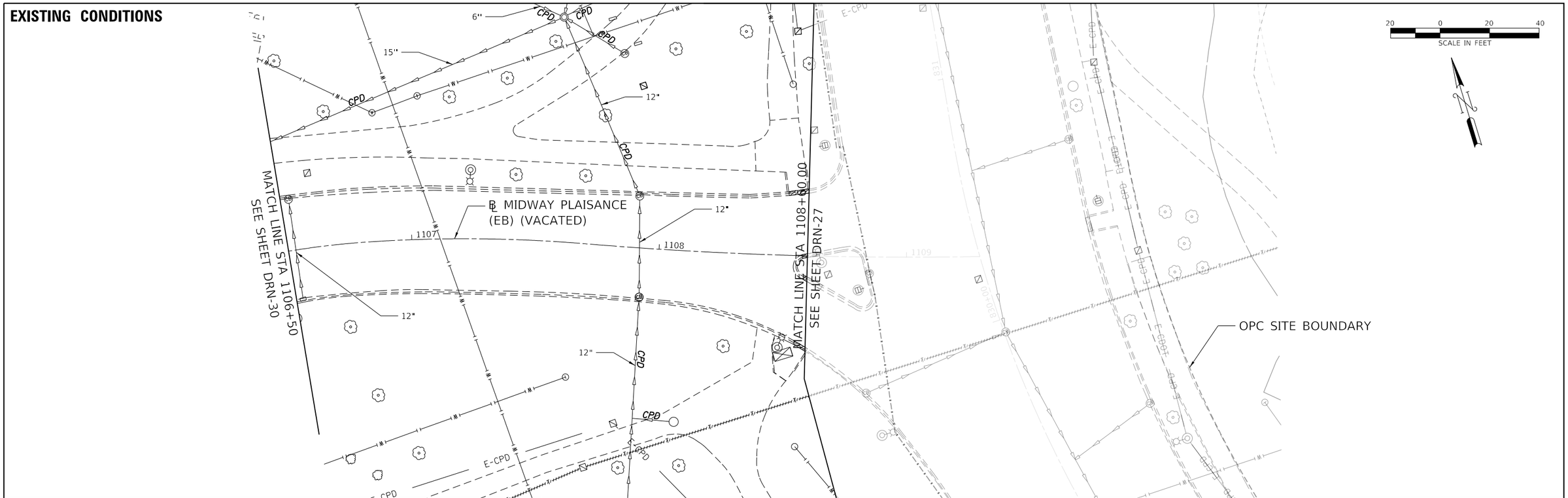


## PROPOSED CONDITIONS

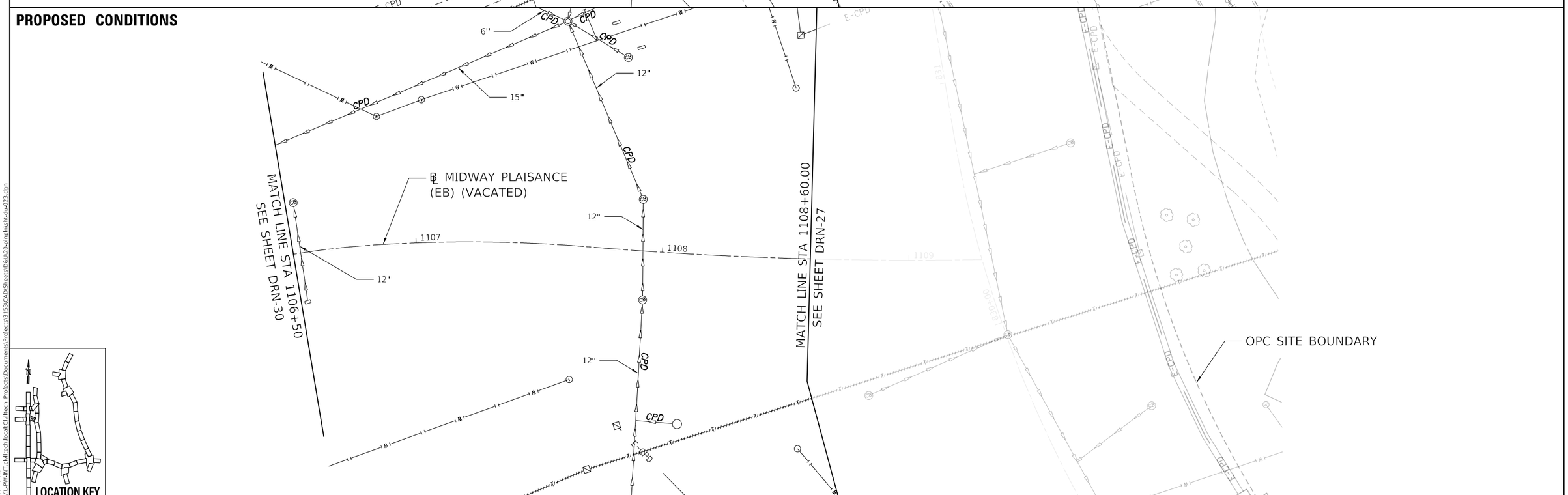


PLOT DATE: 5/17/2021
PLOT SCALE: 40.0000 ' / in.
FILE NAME: pw:\\CIVIL-PW-INT.civiltech.local:Civiltech Projects\Documents\Projects\3153\CAD\Sheets\D&U\20-plnpln\sht-du-023.dgn

| | | | | |
|---|---|---|---|---|
| DESIGN: MSA | | | $REV3 | |
| DRAWN: MSA | | | $REV2 | |
| CHECKED: TKL | | | $REV1 | |
| APPROVED: | NO. | BY | DATE | DESCRIPTION |
| DATE: 03/29/2021 | REVISIONS | | | |

CDOT CHICAGO DEPARTMENT OF TRANSPORTATION

C*NECT

DRAINAGE PLAN
EXISTING & PROPOSED CONDITIONS
E. MIDWAY PLAISANCE (S)

JACKSON PARK MOBILITY IMPROVEMENTS

STA. 1106+50 TO STA. 1108+60

| | | |
|---|---|---|
| CONTRACT NO. - | TOTAL SHEETS 1434 | SHEET NO. 461 |
| PROJECT NO. B-7-203 | DRAWING NO. DRN-31 | |
| SCALE: 1"=20' | | |

## EXISTING CONDITIONS

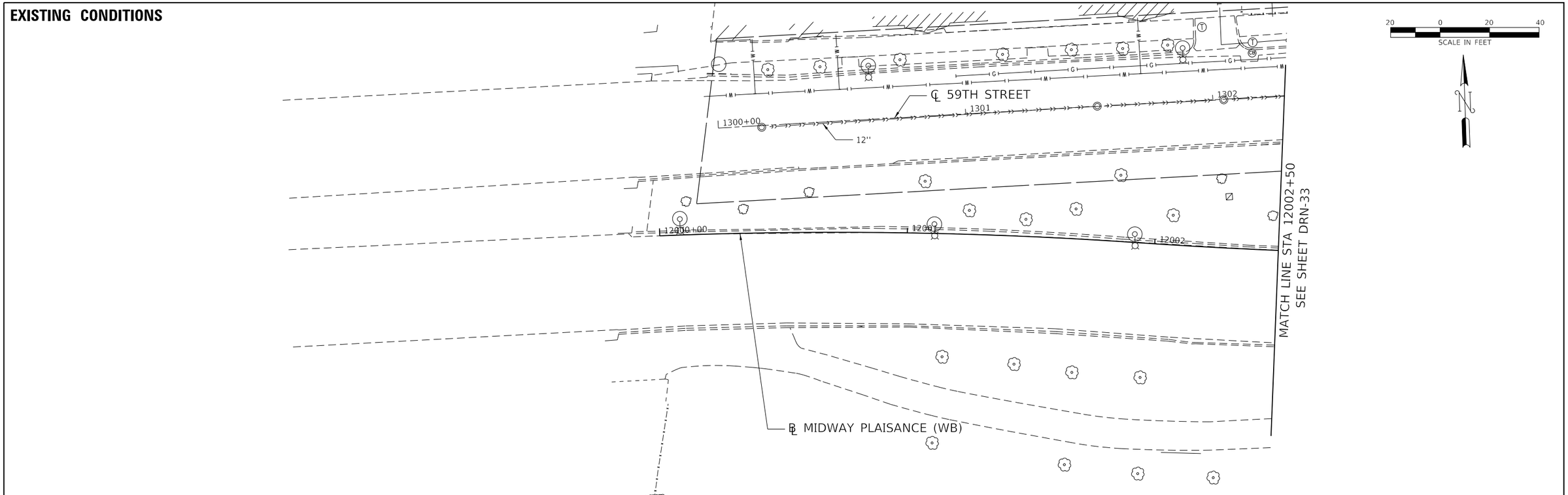


## PROPOSED CONDITIONS

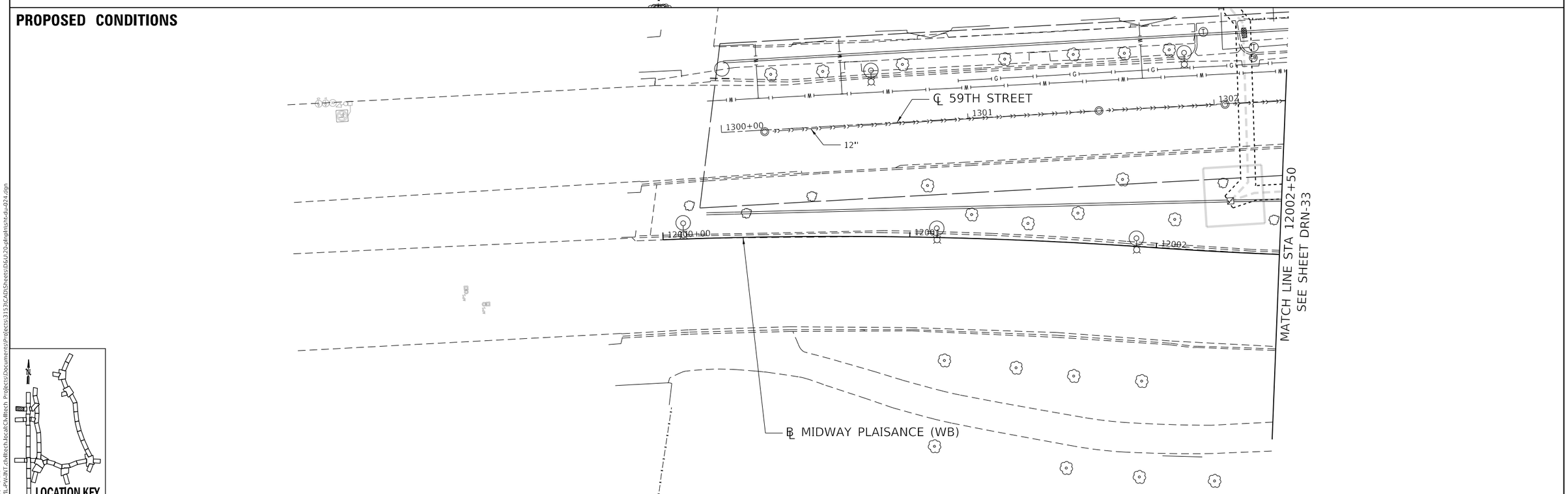





LOCATION KEY

PLOT DATE: 5/17/2021
PLOT SCALE: 40.0000 ' / in.
FILE NAME: pw:\\CIVIL-PW-INT.civiltech.local:Civiltech Projects\Documents\Projects\3153\CAD\Sheets\D&U\20-plnpln\sht-du-024.dgn

| | | | | |
|---|---|---|---|---|
| DESIGN: MSA | | | $REV3 | |
| DRAWN: MSA | | | $REV2 | |
| CHECKED: TKL | | | $REV1 | |
| APPROVED: | NO. | BY | DATE | DESCRIPTION |
| DATE: 01/22/2021 | REVISIONS | | | |

CDOT CHICAGO DEPARTMENT OF TRANSPORTATION

C*NECT

DRAINAGE PLAN
EXISTING & PROPOSED CONDITIONS
E. MIDWAY PLAISANCE (N)

JACKSON PARK MOBILITY IMPROVEMENTS

STA. 12000+00 TO STA. 12002+50

| | | |
|---|---|---|
| CONTRACT NO. - | TOTAL SHEETS 1434 | SHEET NO. 462 |
| PROJECT NO. B-7-203 | DRAWING NO. DRN-32 | |
| SCALE: 1"=20' | | |

## EXISTING CONDITIONS

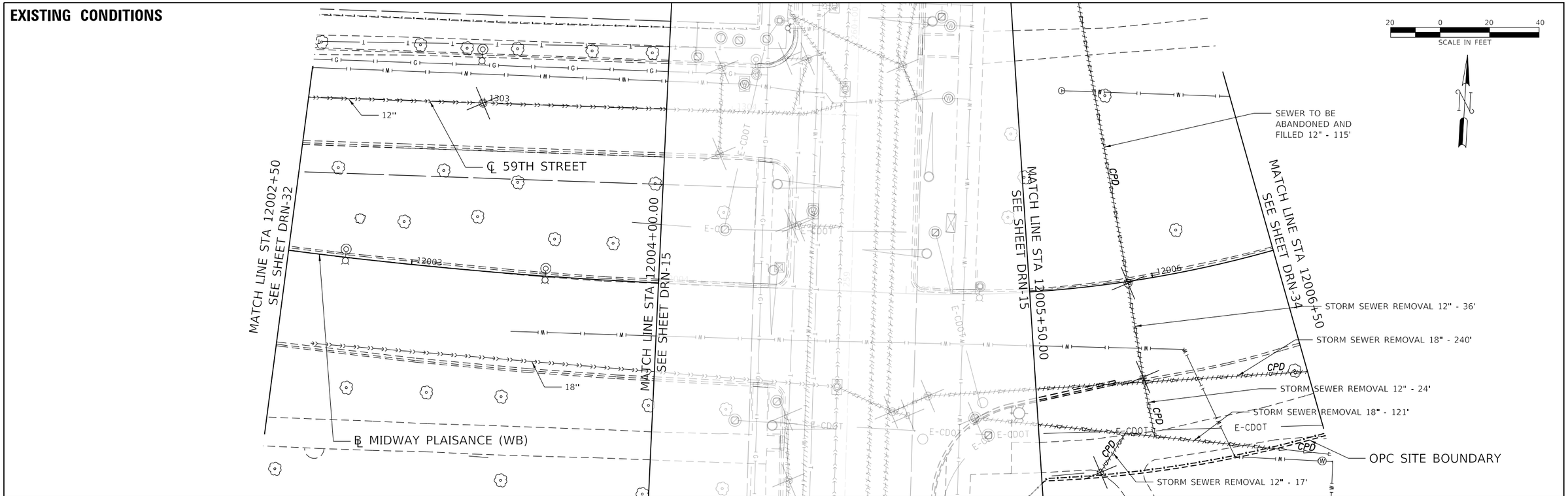


## PROPOSED CONDITIONS

91

CB TYPE A 4' DIA, T1F OL (COC)
STA. 12005+89.66, 0.00' RT/LT
RIM EL. 6.55
INV EL. TBD (EX N)
INV EL. 3.66 (S)

92

MH TYPE B 3' DIA, T1F CL (COC)
STA. 12005+90.53, 46.12' RT
RIM EL. 6.51
INV EL. 3.43 (N)
INV EL. 3.29 (NE/W)

102

STORM SEWERS
TYPE 1, DIP
8" - 42' @ 0.55%
TBF - 2.0 CY

58 BOTTOM SEWER = 3.52
TOP WATER = 2.01

59 BOTTOM SEWER = 3.36
TOP WATER = 1.85







LOCATION KEY

PLOT DATE: 5/17/2021
PLOT SCALE: 40.0000 ' / in.
FILE NAME: pw:\\CIVIL-PW-INT.civiltech.local:Civiltech Projects\Documents\Projects\3153\CAD\Sheets\D&U\20-plnpln\sht-du-025.dgn

| | | | | | |
|---|---|---|---|---|---|
| DESIGN: MSA | | | $REV3 | | |
| DRAWN: MSA | | | $REV2 | | |
| CHECKED: TKL | | | $REV1 | | |
| APPROVED: | NO. | BY | DATE | DESCRIPTION | |
| DATE: 01/22/2021 | REVISIONS | | | | |

CDOT CHICAGO DEPARTMENT OF TRANSPORTATION

C*NECT

DRAINAGE PLAN
EXISTING & PROPOSED CONDITIONS
E. MIDWAY PLAISANCE (N)

JACKSON PARK MOBILITY IMPROVEMENTS

STA. 12002+50 TO STA. 12006+50

| | | |
|---|---|---|
| CONTRACT NO. - | TOTAL SHEETS 1434 | SHEET NO. 463 |
| PROJECT NO. B-7-203 | DRAWING NO. DRN-33 | |
| SCALE: 1"=20' | | |

## EXISTING CONDITIONS

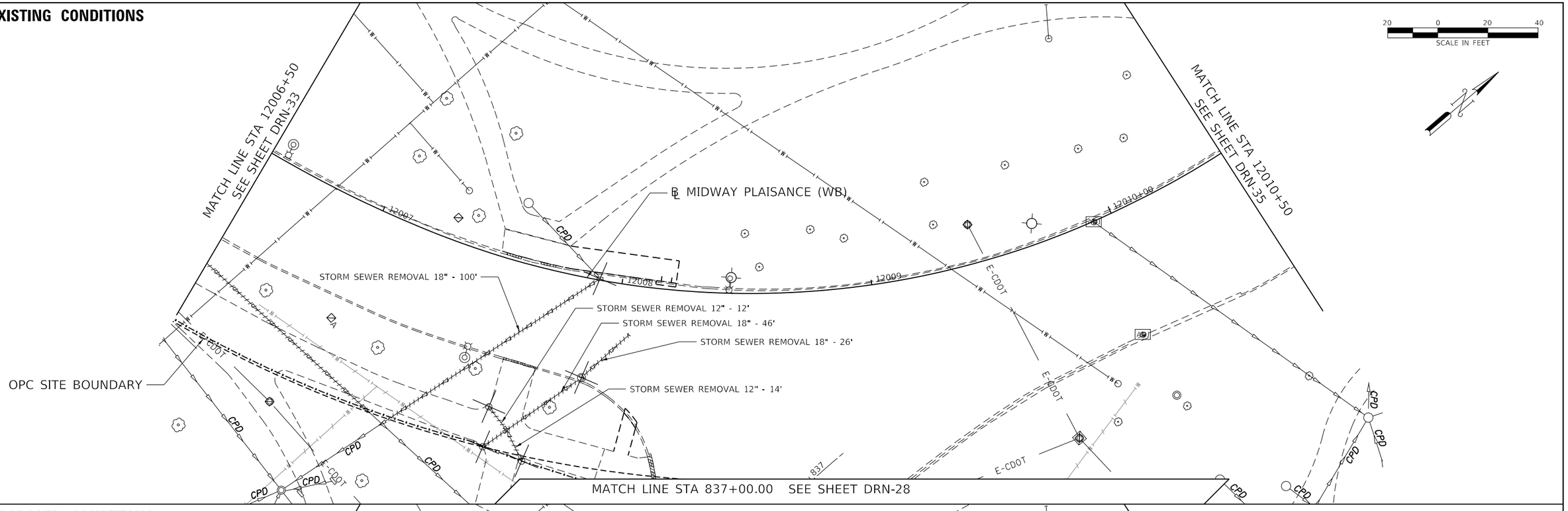


## PROPOSED CONDITIONS

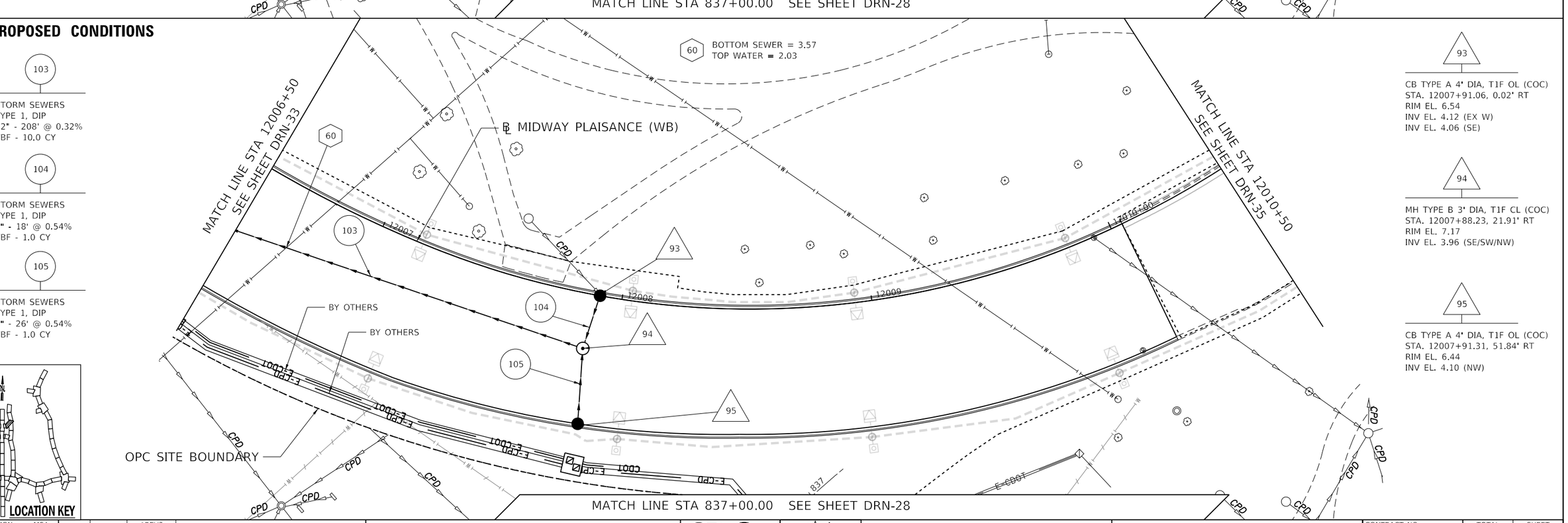


**103**

STORM SEWERS
TYPE 1, DIP
12" - 208' @ 0.32%
TBF - 10.0 CY

**104**

STORM SEWERS
TYPE 1, DIP
8" - 18' @ 0.54%
TBF - 1.0 CY

**105**

STORM SEWERS
TYPE 1, DIP
8" - 26' @ 0.54%
TBF - 1.0 CY

**93**

CB TYPE A 4' DIA, T1F OL (COC)
STA. 12007+91.06, 0.02' RT
RIM EL. 6.54
INV EL. 4.12 (EX W)
INV EL. 4.06 (SE)

**94**

MH TYPE B 3' DIA, T1F CL (COC)
STA. 12007+88.23, 21.91' RT
RIM EL. 7.17
INV EL. 3.96 (SE/SW/NW)

**95**

CB TYPE A 4' DIA, T1F OL (COC)
STA. 12007+91.31, 51.84' RT
RIM EL. 6.44
INV EL. 4.10 (NW)




| | | | | | |
|---|---|---|---|---|---|
| DESIGN: MSA | | | $REV3 | | |
| DRAWN: MSA | | | $REV2 | | |
| CHECKED: TKL | | | $REV1 | | |
| APPROVED: | NO. | BY | DATE | DESCRIPTION | |
| DATE: 01/22/2021 | REVISIONS | | | | |

CDOT CHICAGO DEPARTMENT OF TRANSPORTATION

C*NECT

**DRAINAGE PLAN**
**EXISTING & PROPOSED CONDITIONS**
**E. MIDWAY PLAISANCE (N)**

**JACKSON PARK MOBILITY IMPROVEMENTS**

STA. 12006+50 TO STA. 12010+50

| | |
|---|---|
| CONTRACT NO. - | TOTAL SHEETS 1434 / SHEET NO. 464 |
| PROJECT NO. B-7-203 | DRAWING NO. DRN-34 |
| SCALE: 1"=20' | |

PLOT DATE: 1/17/2021
PLOT SCALE: 40.0000 ' / in.
FILE NAME: pw:\\CIVIL-PW-INT-civiltech.local\CivilTech Projects\Documents\Projects\313\CADD\Sheets\06\20-dmpMain-dv-d76.dgn

## EXISTING CONDITIONS

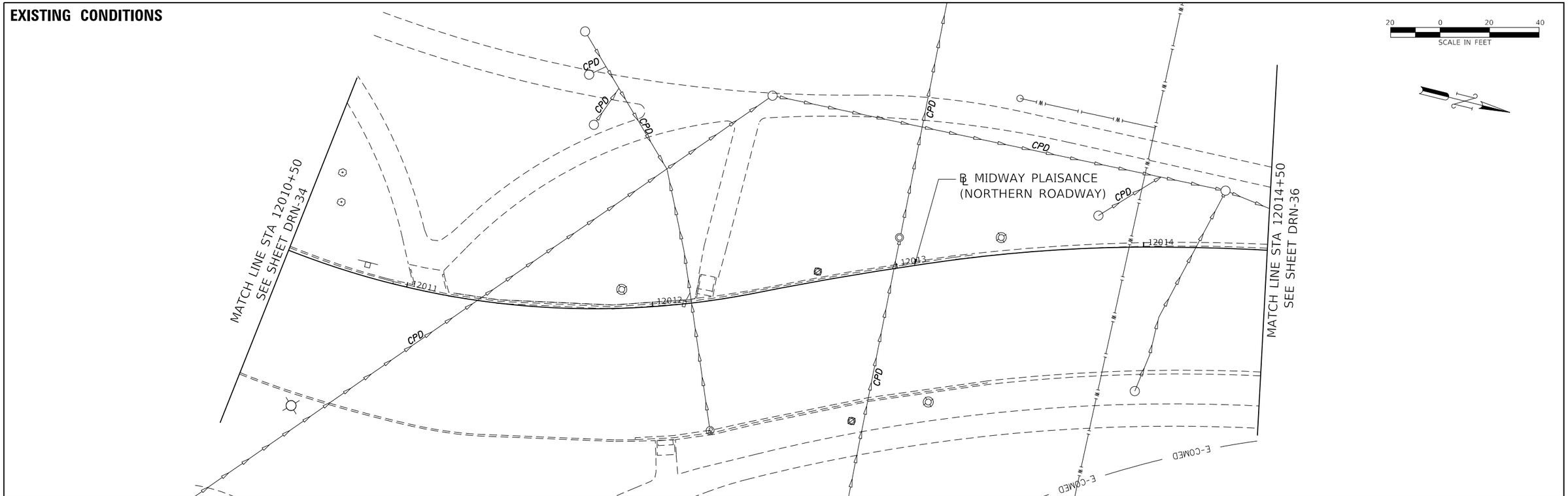


## PROPOSED CONDITIONS

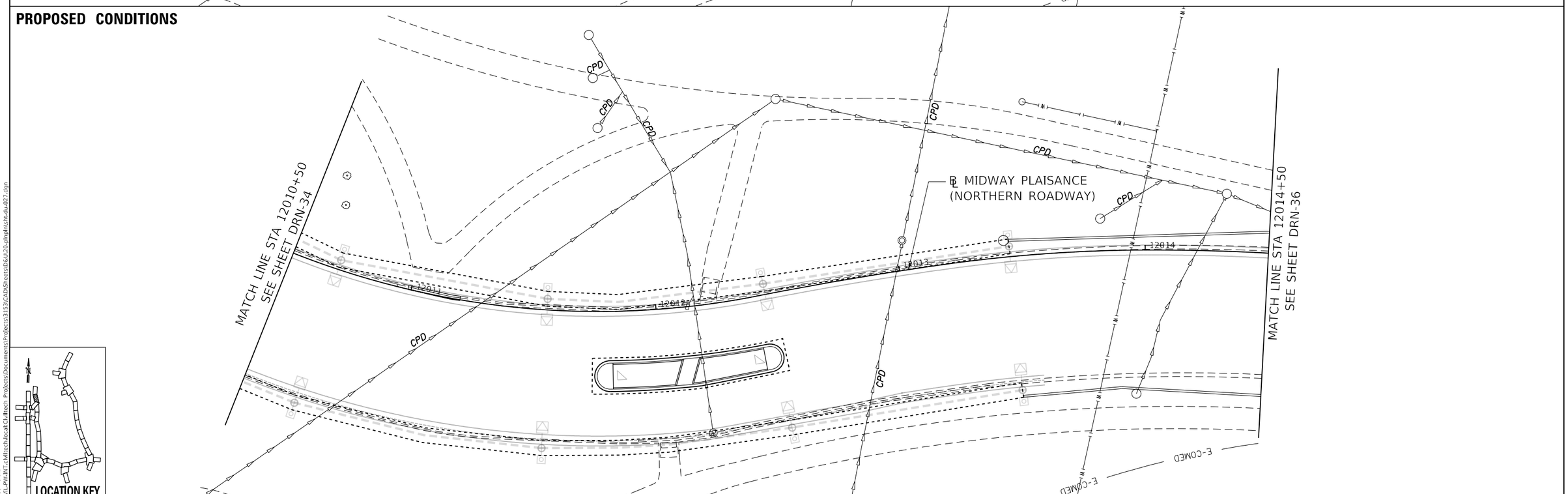





PLOT DATE: 5/17/2021
PLOT SCALE: 40.0000 ' / in.
FILE NAME: pw:\\CIVIL-PW-INT.civiltech.local:Civiltech Projects\Documents\Projects\3153\CAD\Sheets\D&U\20-plnpln\sht-du-027.dgn

| | | | | | |
|---|---|---|---|---|---|
| DESIGN: | MSA | | | $REV3 | |
| DRAWN: | MSA | | | $REV2 | |
| CHECKED: | TKL | | | $REV1 | |
| APPROVED: | | NO. | BY | DATE | DESCRIPTION |
| DATE: 01/22/2021 | | REVISIONS | | | |

CDOT CHICAGO DEPARTMENT OF TRANSPORTATION

C*NECT

DRAINAGE PLAN
EXISTING & PROPOSED CONDITIONS
E. MIDWAY PLAISANCE (N)

JACKSON PARK MOBILITY IMPROVEMENTS

STA. 12010+50 TO STA. 12014+50

| | | |
|---|---|---|
| CONTRACT NO. - | TOTAL SHEETS 1434 | SHEET NO. 465 |
| PROJECT NO. B-7-203 | DRAWING NO. DRN-35 | |
| SCALE: 1"=20' | | |

## EXISTING CONDITIONS

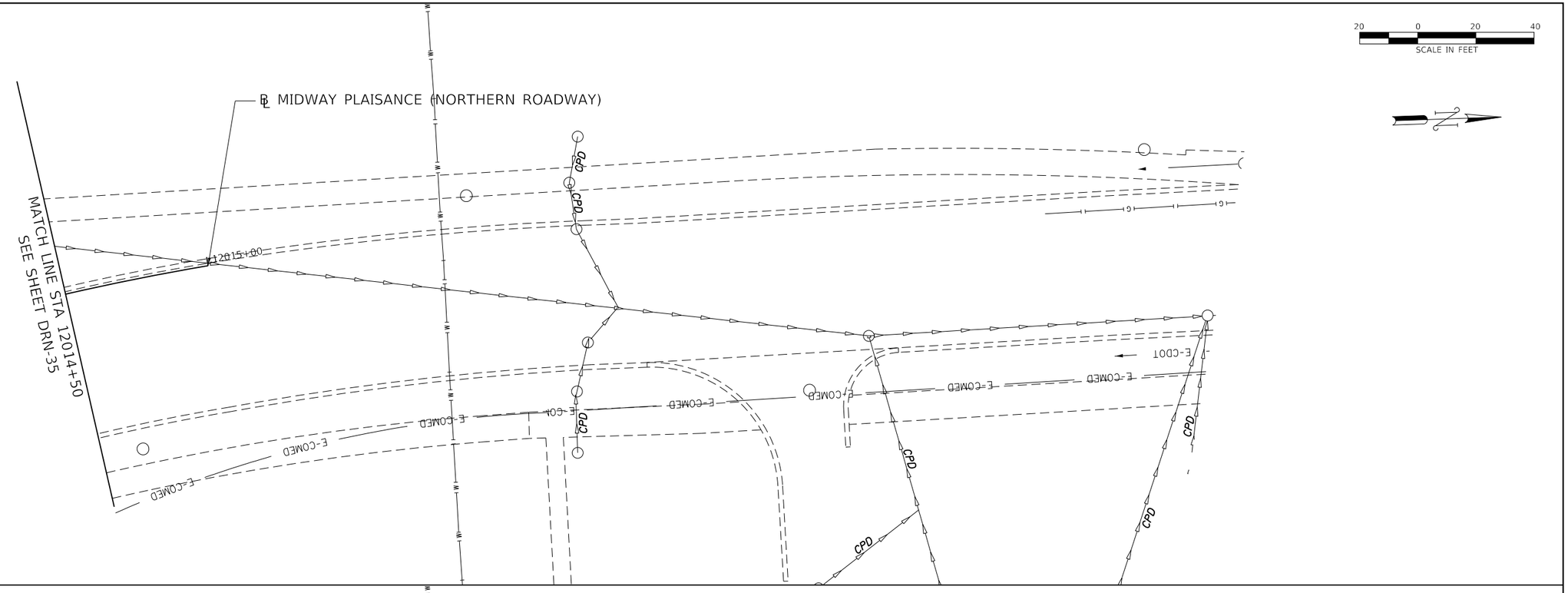


## PROPOSED CONDITIONS

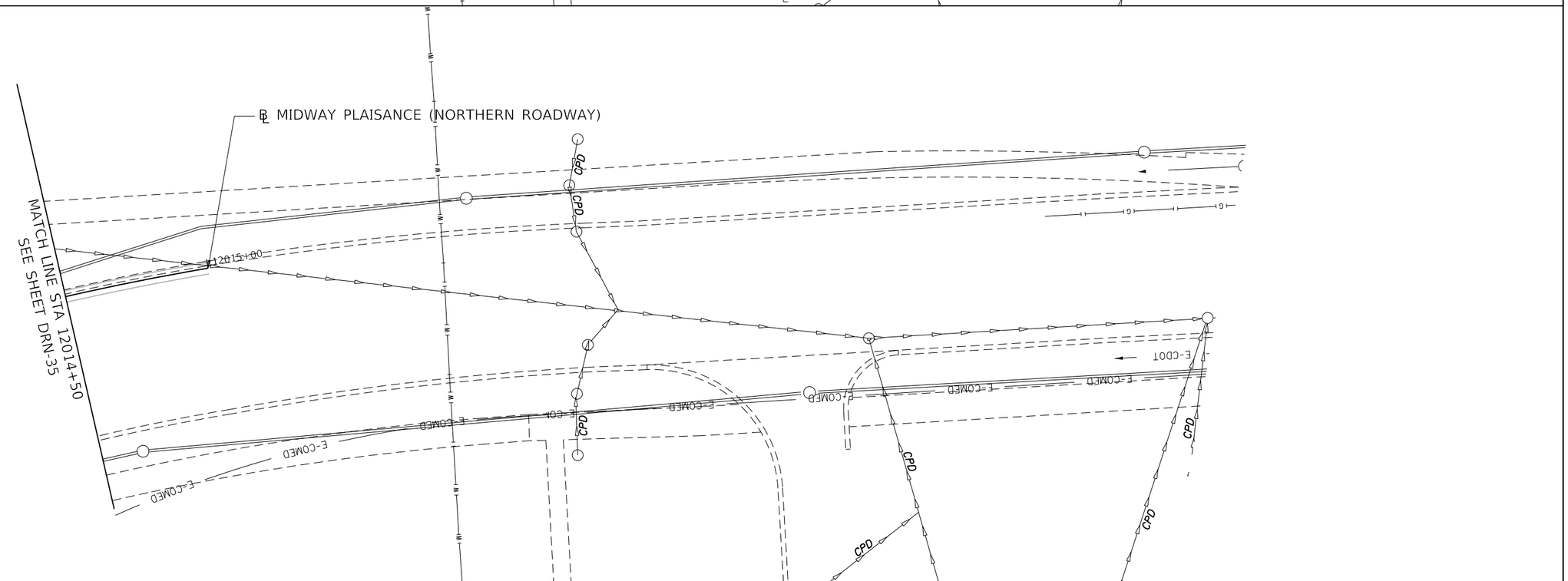


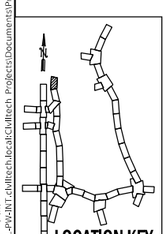

LOCATION KEY

| | | | | | |
|---|---|---|---|---|---|
| DESIGN: | MSA | | | $REV3 | |
| DRAWN: | MSA | | | $REV2 | |
| CHECKED: | TKL | | | $REV1 | |
| APPROVED: | | NO. | BY | DATE | DESCRIPTION |
| DATE: 01/22/2021 | | | | REVISIONS | |

CDOT CHICAGO DEPARTMENT OF TRANSPORTATION

C*NECT

DRAINAGE PLAN
EXISTING & PROPOSED CONDITIONS
E. MIDWAY PLAISANCE (N)

JACKSON PARK MOBILITY IMPROVEMENTS

STA. 12014+50 TO STA. 12015+00

| | | |
|---|---|---|
| CONTRACT NO. - | TOTAL SHEETS 1434 | SHEET NO. 466 |
| PROJECT NO. B-7-203 | DRAWING NO. DRN-36 | |
| SCALE: 1"=20' | | |

PLOT DATE: 5/17/2021
PLOT SCALE: 40.0000 ' / in.
FILE NAME: pw:\\CIVIL-PW-INT.civiltech.local:Civiltech Projects\Documents\Projects\3153\CAD\Sheets\D&U\20-plnpln\sht-du-028.dgn

## EXISTING CONDITIONS

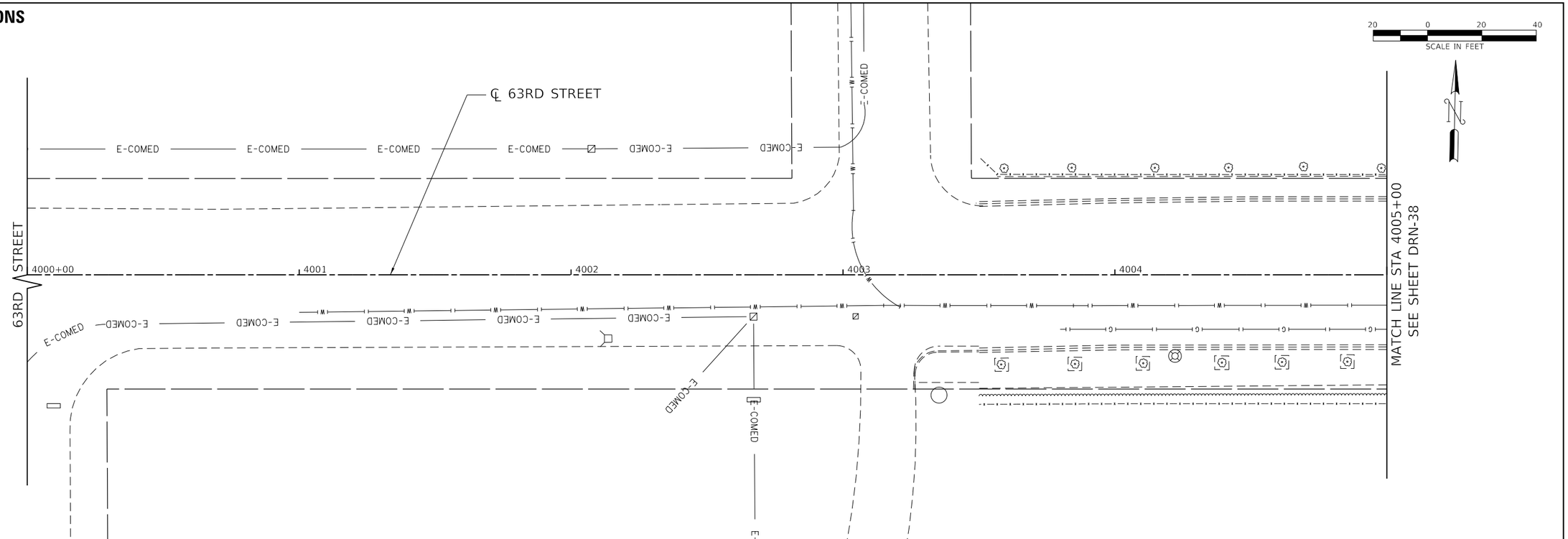


## PROPOSED CONDITIONS

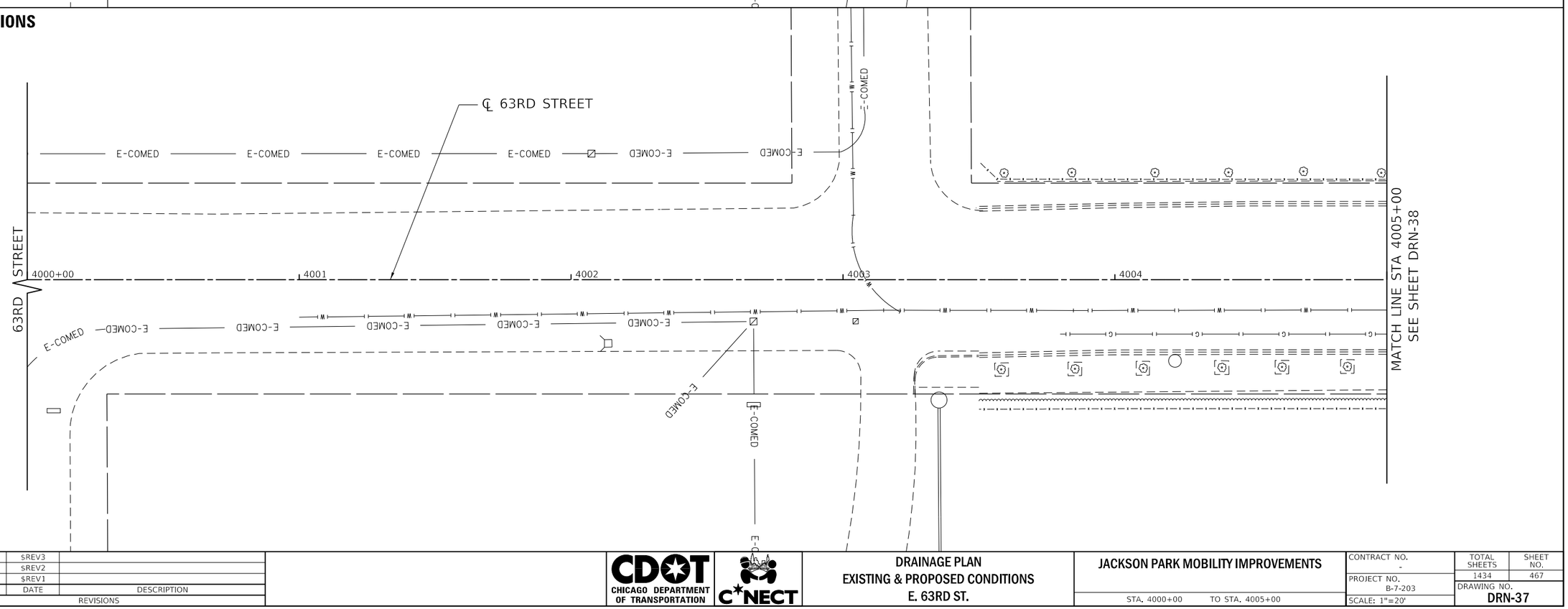


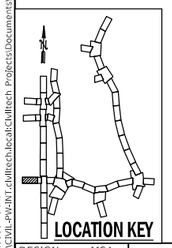


PLOT DATE: 5/17/2021
PLOT SCALE: 40.0000 ' / in.
FILE NAME: pw:\\CIVIL-PW-NT.cdot.tech.local:Civil\tech Projects\Documents\Projects 3153\CADD\Sheets\D&U\20-plnphtsht-du-029.dgn

| | | | | |
|---|---|---|---|---|
| DESIGN: MSA | | | SREV3 | |
| DRAWN: MSA | | | SREV2 | |
| CHECKED: TKL | | | SREV1 | |
| APPROVED: | NO. | BY | DATE | DESCRIPTION |
| DATE: 01/22/2021 | REVISIONS | | | |

CHICAGO DEPARTMENT OF TRANSPORTATION

CONNECT

**DRAINAGE PLAN**
**EXISTING & PROPOSED CONDITIONS**
**E. 63RD ST.**

**JACKSON PARK MOBILITY IMPROVEMENTS**

STA. 4000+00 TO STA. 4005+00

| | |
|---|---|
| CONTRACT NO. - | TOTAL SHEETS 1434 |
| PROJECT NO. B-7-203 | SHEET NO. 467 |
| SCALE: 1"=20' | DRAWING NO. DRN-37 |

## EXISTING CONDITIONS

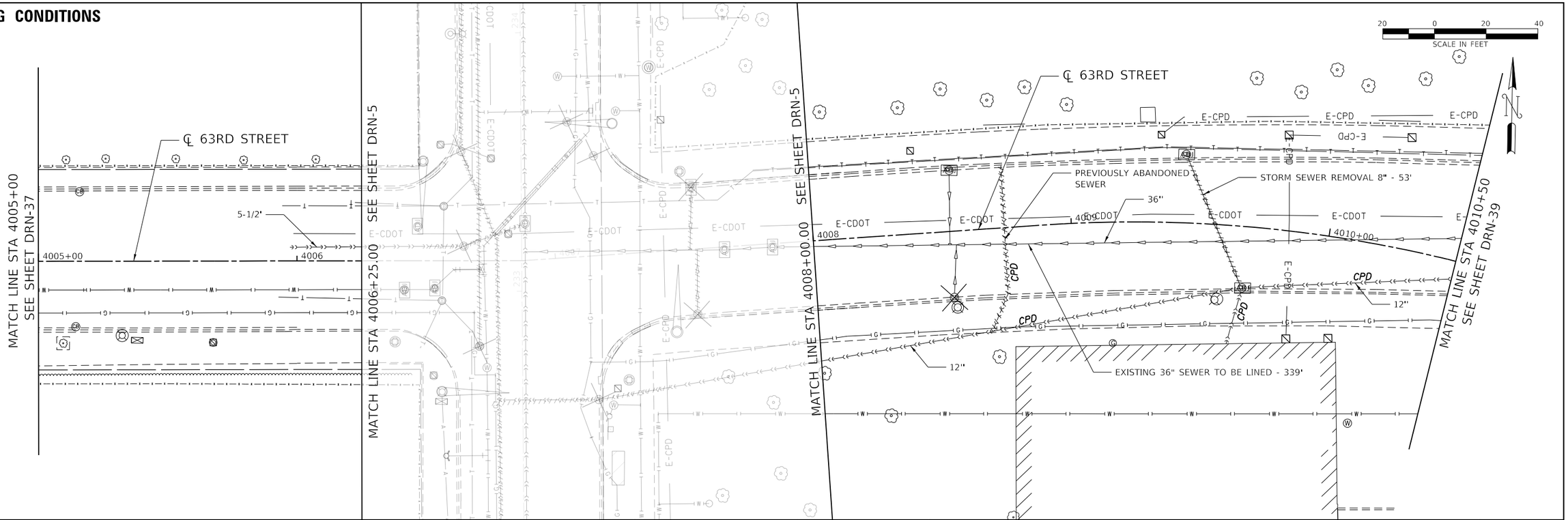


## PROPOSED CONDITIONS

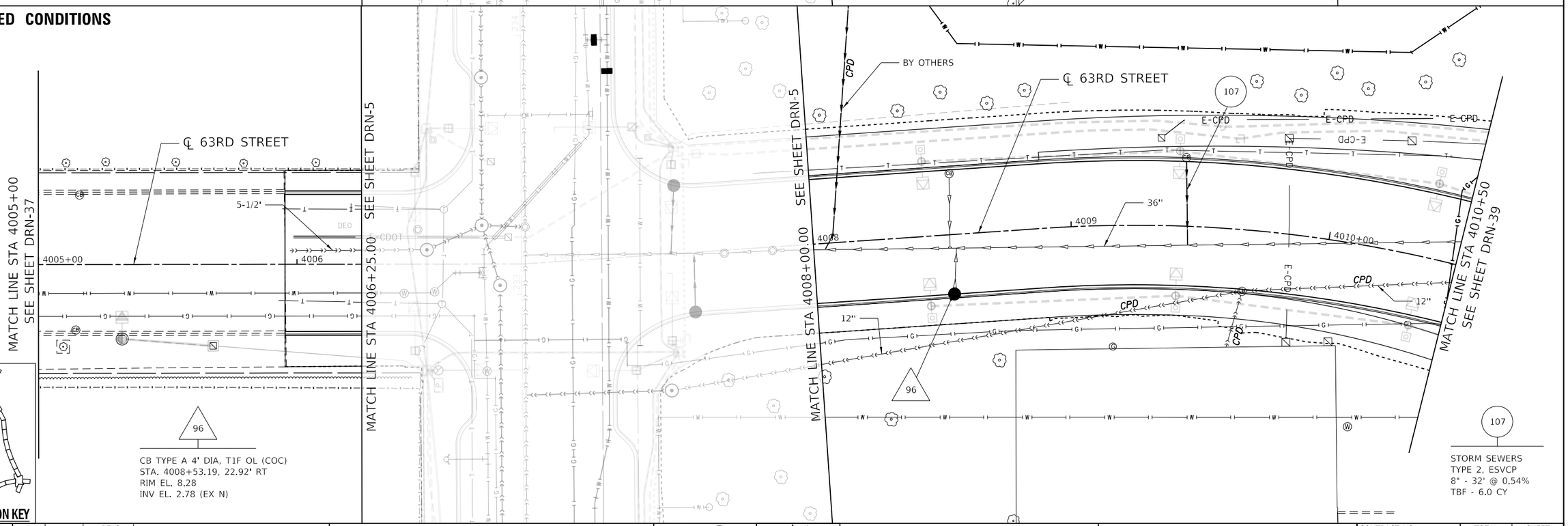


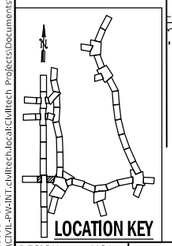


96

CB TYPE A 4' DIA, T1F OL (COC)
STA. 4008+53.19, 22.92' RT
RIM EL. 8.28
INV EL. 2.78 (EX N)

107

STORM SEWERS
TYPE 2, ESVCP
8" - 32' @ 0.54%
TBF - 6.0 CY

| | | | | | |
|---|---|---|---|---|---|
| DESIGN: MSA | | | $REV3 | | |
| DRAWN: MSA | | | $REV2 | | |
| CHECKED: TKL | | | $REV1 | | |
| APPROVED: | NO. | BY | DATE | DESCRIPTION | |
| DATE: 01/22/2021 | REVISIONS | | | | |

CHICAGO DEPARTMENT OF TRANSPORTATION

C*NECT

**DRAINAGE PLAN**
**EXISTING & PROPOSED CONDITIONS**
**E. 63RD ST.**

**JACKSON PARK MOBILITY IMPROVEMENTS**

STA. 4005+00 TO STA. 4010+50

| | |
|---|---|
| CONTRACT NO. | - |
| PROJECT NO. | B-7-203 |
| SCALE: | 1"=20' |

| TOTAL SHEETS | SHEET NO. |
|---|---|
| 1434 | 468 |

DRAWING NO. **DRN-38**

PLOT DATE: 5/17/2021
PLOT SCALE: 40.0000 ' / in.
FILE NAME: pw:\CDVL-PW-INT.cdwltech.local\CivilTech Projects\Documents\Projects\3133\CADSheets\D&U\20-plnpln\sht-du-d30.dgn

# EXISTING CONDITIONS

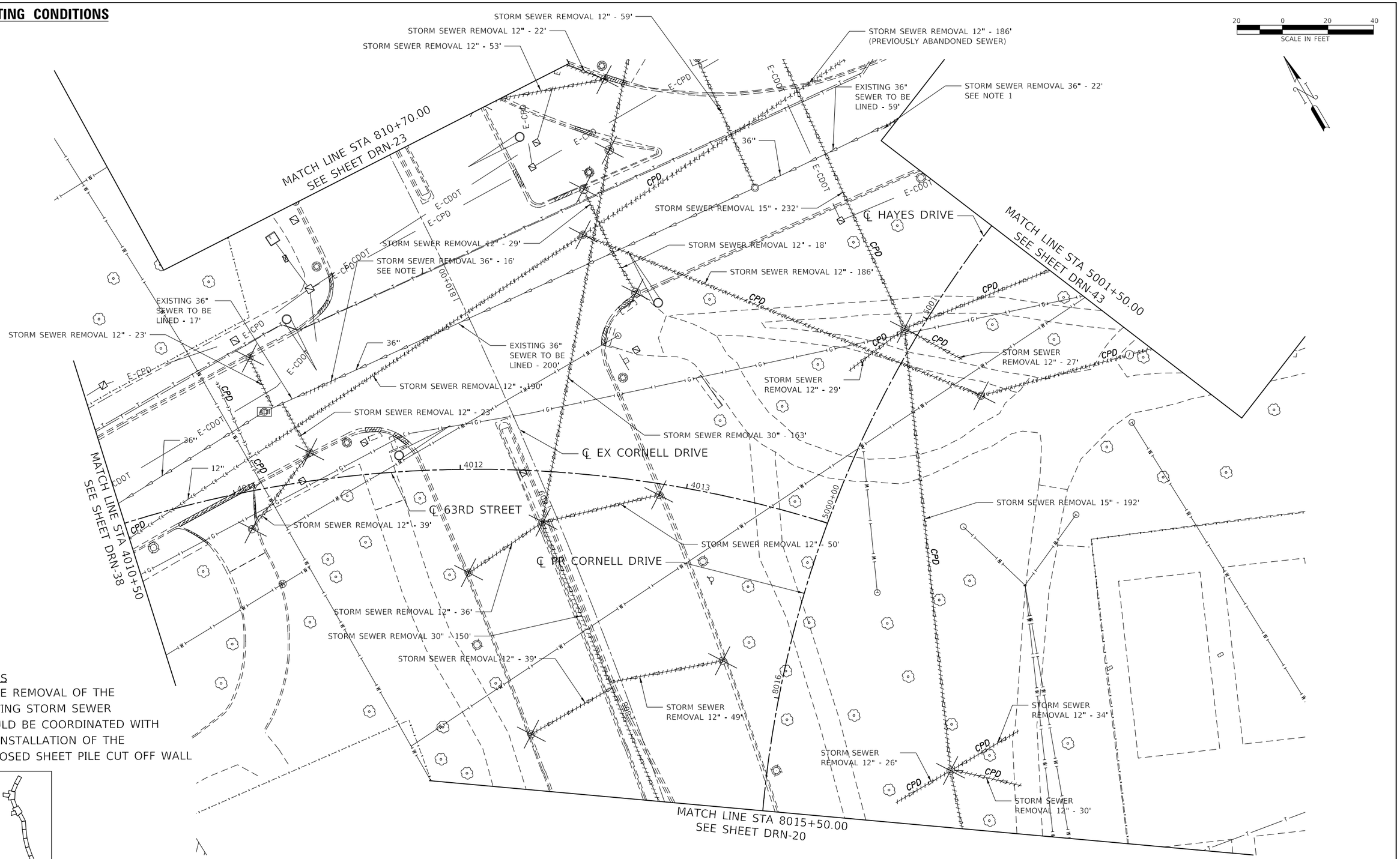


NOTES

1. THE REMOVAL OF THE EXISTING STORM SEWER SHOULD BE COORDINATED WITH THE INSTALLATION OF THE PROPOSED SHEET PILE CUT OFF WALL

LOCATION KEY

| | | | | | |
|---|---|---|---|---|---|
| DESIGN: MSA | | | | | |
| DRAWN: MSA | | | | | |
| CHECKED: TKL | | | | | |
| APPROVED: | NO. | BY | DATE | DESCRIPTION | |
| DATE: 01/22/2021 | REVISIONS | | | | |

CDOT CHICAGO DEPARTMENT OF TRANSPORTATION

C*NECT

**DRAINAGE PLAN**
**EXISTING CONDITIONS**
**E. 63RD ST./E. HAYES DR./S. CORNELL DR.**

**JACKSON PARK MOBILITY IMPROVEMENTS**

STA. 4010+50 TO STA. 5001+50

| | |
|---|---|
| CONTRACT NO. - | TOTAL SHEETS 1434 |
| PROJECT NO. B-7-203 | SHEET NO. 469 |
| SCALE: 1"=20' | DRAWING NO. DRN-39 |

PLOT DATE: 5/17/2021
PLOT SCALE: 40.0000 ' / in.
FILE NAME: pw:\\CWIL-PW-INT.civiltech.local\Civiltech Projects\Documents\Projects\3153\C4D\Sheets\D6&J2D-alignNoSht-du431.dgn

## PROPOSED CONDITIONS

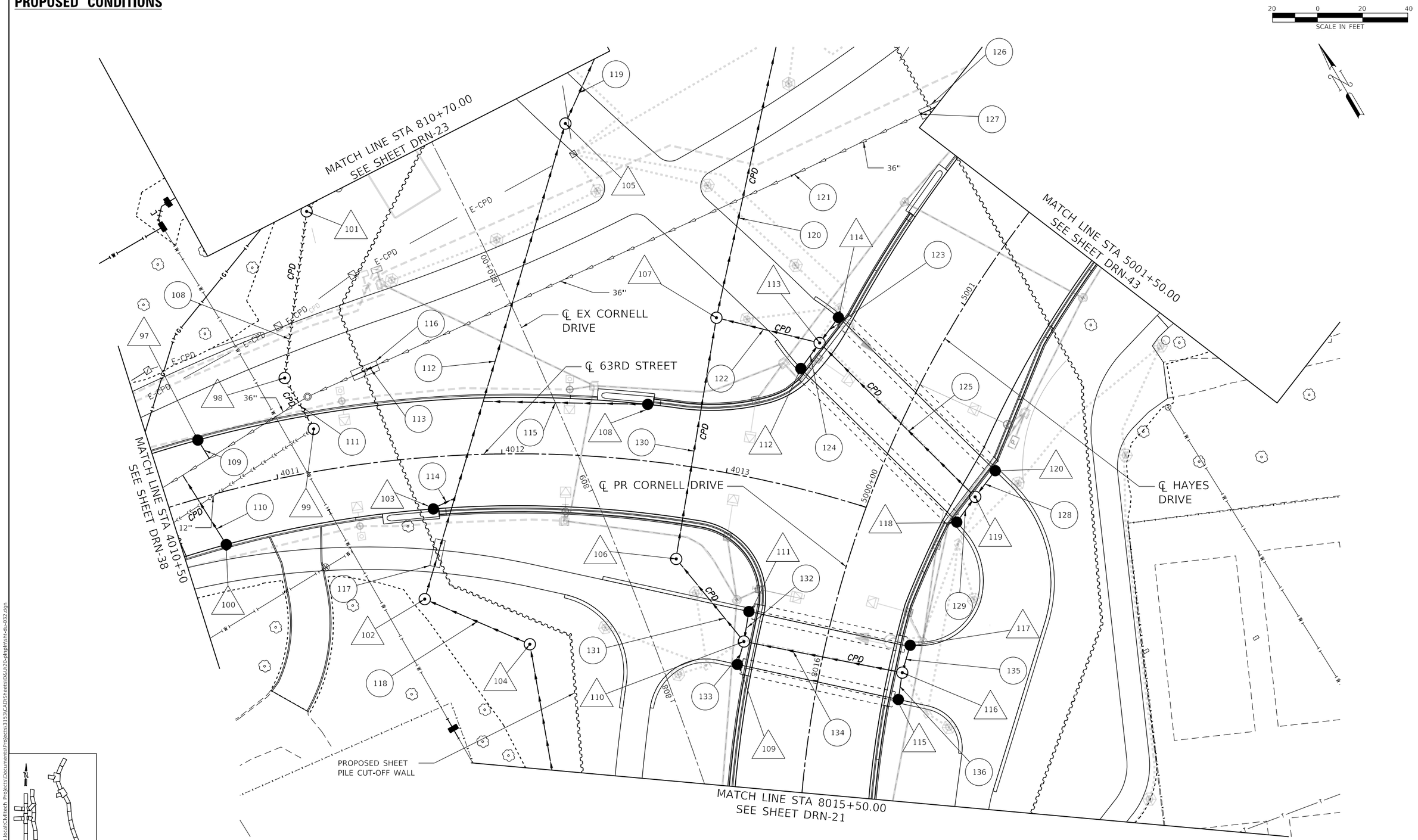


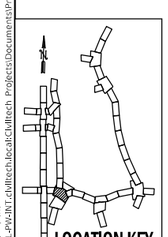


| | | | | |
|---|---|---|---|---|
| DESIGN: MSA | | | | |
| DRAWN: MSA | | | | |
| CHECKED: TKL | | | | |
| APPROVED: | NO. | BY | DATE | DESCRIPTION |
| DATE: 01/22/2021 | REVISIONS | | | |

CDOT CHICAGO DEPARTMENT OF TRANSPORTATION

C*NECT

DRAINAGE PLAN
PROPOSED CONDITIONS
E. 63RD ST./E. HAYES DR./S. CORNELL DR.

JACKSON PARK MOBILITY IMPROVEMENTS

STA. 4010+50 TO STA. 5001+50

| | | |
|---|---|---|
| CONTRACT NO. - | TOTAL SHEETS 1434 | SHEET NO. 470 |
| PROJECT NO. B-7-203 | DRAWING NO. DRN-40 | |
| SCALE: 1"=20' | | |

PLOT DATE: 5/17/2021
PLOT SCALE: 40.0000 ' / in.
FILE NAME: pw:\\CIVIL-PW-INT.civiltech.local:Civiltech Projects\Documents\Projects\3153\CAD\Sheets\D&U\20-plnpln\sht-du-032.dgn

97

CB TYPE A 4' DIA, T1F OL (COC)
STA. 4010+70.24, 25.00' LT
RIM EL. 7.88
INV EL. 3.38 (SW)

98

SAN MH TYPE A 4' DIA, T1F CL (COC)
STA. 4011+11.18, 43.24' LT
RIM EL. 7.32
INV EL. 2.12 (S/NE)

99

SAN MH TYPE A 4' DIA, T1F CL (COC)
STA. 4011+19.35, 18.73' LT
RIM EL. 8.31
INV EL. 2.07 (N/EX W)

100

CB TYPE A 4' DIA, T1F OL (COC)
STA. 4010+70.24, 23.00' RT
RIM EL. 7.92
INV EL. 4.10 (NE)

101

SAN MH TYPE A 4' DIA, T1F CL (COC)
STA. 4011+26.75, 110.61' LT
RIM EL. 7.41
INV EL. 2.28 (NE/SW)

102

MH TYPE B 3' DIA, T1F CL (COC)
STA. 4011+63.05, 55.81' RT
RIM EL. 7.78
INV EL. -1.34 (S/NE)

103

CB TYPE A 4' DIA, T1F OL (COC)
STA. 4011+67.86, 23.00' RT
RIM EL. 10.53
INV EL. 6.03 (SE)

104

MH TYPE A 3' DIA, T1F CL (COC)
STA. 8015+57.48, 113.62' LT
RIM EL. 7.94
INV EL. -1.22 (N/SW)

105

MH TYPE A 3' DIA, T1F CL (COC)
STA. 4012+23.45, 146.80' LT
RIM EL. 2.72
INV EL. -1.78 (NE/SW)

106

MH TYPE A 4' DIA, T1F CL (COC)
STA. 8016+35.96 73.37' LT
RIM EL. 5.86
INV EL. -5.03 (NE)
INV EL. -4.57 (S)

107

MH TYPE A 6' DIA, T1F CL (COC)
STA. 5000+47.08, 93.96' LT
RIM EL. 2.02
INV EL. -5.33 (SE/SW)
INV EL. -8.24 (NE)

108

CB TYPE A 4' DIA. T1F OL (COC)
STA. 4012+61.96, 25.00' LT
RIM EL. 11.77
INV EL. 7.27 (NW)

109

CB TYPE A 4' DIA, T1F OL (COC)
STA. 8016+00.45, 36.36' LT
RIM EL. 0.21
INV EL. -4.29 (NE)

110

MH TYPE A 7' DIA, T1F CL (COC)
STA. 8016+10.26, 35.57' LT
RIM EL. 0.38
INV EL. -4.35 (N/SE/NE/SW)

111

CB TYPE A 4' DIA, T1F OL (COC)
STA. 8016+22.81, 36.36' LT
RIM EL. 0.21
INV EL. -4.28 (SW)

112

CB TYPE A 4' DIA, T1F OL (COC)
STA. 5000+43.34, 50.55' LT
RIM EL. -1.36
INV EL. -5.16 (NE)

113

MH TYPE A 5' DIA, T1F CL (COC)
STA. 5000+55.97, 47.99' LT
RIM EL. -1.17
INV EL. -5.22 (NW/S/NE/SW)

114

CB TYPE A 4' DIA, T1F OL (COC)
STA. 5000+68.72, 45.79' LT
RIM EL. -1.39
INV EL. -5.16 (SW)

115

CB TYPE A 4' DIA, T1F OL (COC)
STA. 8015+98.67, 36.62' RT
RIM EL. -0.09
INV EL. -4.09 (NE)

116

MH TYPE A 4' DIA, T1F CL (COC)
STA. 8016+11.63, 35.93' RT
RIM EL. 0.10
INV EL. -4.15 (NW/NE/SW)

117

CB TYPE A 4' DIA, T1F OL (COC)
STA. 8016+25.22, 36.60' RT
RIM EL. -0.09
INV EL. -4.09 (SW)

118

CB TYPE A 4' DIA, T1F OL (COC)
STA. 5000+08.42, 39.88' RT
RIM EL. -0.91
INV EL. -4.88 (NE)

119

MH TYPE A 4' DIA, T1F CL (COC)
STA. 5000+23.07, 43.23' RT
RIM EL. -0.72
INV EL. -4.94 (N/NE/SW)

120

CB TYPE A 4' DIA, T1F OL (COC)
STA. 5000+38.69, 46.73' RT
RIM EL. -0.93
INV EL. -4.88 (SW)

108

SANITARY SEWERS
TYPE 2, DIP
12" - 69' @ 0.23%
TBF - 17.0 CY

109

STORM SEWERS
TYPE 2, ESVCP
8" - 7' @ 0.54%
TBF - 3.0 CY

110

STORM SEWERS
TYPE 2, ESVCP
8" - 34' @ 0.54%
TBF - 6.0 CY

111

SANITARY SEWERS
TYPE 2, DIP
12" - 21' @ 0.26%
TBF - 7.0 CY

112

STORM SEWERS
TYPE 2, RCP
30" - 215' @ 0.20%
TBF - 139.0 CY

113

STORM SEWERS
TYPE 2, RCP
36" - 16' @ 0.12%
TBF - 0.0 CY

114

STORM SEWERS
TYPE 2, ESVCP
8" - 8' @ 0.54%
TBF - 7 CY

115

STORM SEWERS
TYPE 1, ESVCP
8" - 71' @ 0.54%
TBF - 3 CY

116

STORM SEWERS
STEEL CASING
48" - 16' @ 0.12%

117

STORM SEWERS
STEEL CASING
48" - 16' @ 0.12%

118

STORM SEWERS
TYPE 2, RCP
30" - 46' @ 0.14%
TBF - 0.0 CY

119

STORM SEWERS
TYPE 2, DIP
30" - 136' @ 0.20%
TBF - 58.0 CY

120

STORM SEWERS
TYPE 3, DIP
24" - 137' @ 0.18%
TBF - 262.0 CY

121

STORM SEWERS
TYPE 2, RCP
36" - 6' @ TBD
TBF - 0.0 CY

122

STORM SEWERS
TYPE 2, DIP
18" - 42' @ 0.22%
TBF - 13.0 CY

123

STORM SEWERS
TYPE 2, ESVCP
8" - 10' @ 0.60%
TBF - 2.0 CY

124

STORM SEWERS
TYPE 2, ESVCP
8" - 10' @ 0.60%
TBF - 2.0 CY

125

STORM SEWERS
TYPE 1, DIP
18" - 92' @ 0.30%
TBF - 11.0 CY

126

STORM SEWERS
STEEL CASING
42" - 16' @ 0.20%

127

STORM SEWERS
TYPE 2, DIP
36" - 16' @ 0.12%
TBF - 0.0 CY

128

STORM SEWERS
TYPE 2, ESVCP
8" - 10' @ 0.60%
TBF - 2.0 CY

129

STORM SEWERS
TYPE 2, ESVCP
8" - 9' @ 0.60%
TBF - 2.0 CY

130

STORM SEWERS
TYPE 2, DIP
18" - 103' @ 0.29%
TBF - 113.0 CY

131

STORM SEWERS
TYPE 2, DIP
18" - 43' @ 0.35%
TBF - 35.0 CY

132

STORM SEWERS
TYPE 2, ESVCP
8" - 9' @ 0.75%
TBF - 2.0 CY

133

STORM SEWERS
TYPE 2, ESVCP
8" - 6' @ 1.00%
TBF - 2.0 CY

134

STORM SEWERS
TYPE 1, DIP
18" - 67' @ 0.30%
TBF - 11.0 CY

135

STORM SEWERS
TYPE 2, ESVCP
8" - 8' @ 0.75%
TBF - 2.0 CY

136

STORM SEWERS
TYPE 2, ESVCP
8" - 8' @ 0.75%
TBF - 2.0 CY

PLOT DATE: 5/17/2021
PLOT SCALE: 40.0000 ' / in.
FILE NAME: pw:\\CIVIL-PW-INT.dsMtech.local:CivilTech Projects\Documents\Projects\3153\CADDSheets\DGU20-dhpltnt-du-a932b.dgn

| | | | | |
|---|---|---|---|---|
| DESIGN: MSA | | | | |
| DRAWN: MSA | | | | |
| CHECKED: TKL | | | | |
| APPROVED: | NO. | BY | DATE | DESCRIPTION |
| DATE: 01/22/2021 | REVISIONS | | | |

CDOT CHICAGO DEPARTMENT OF TRANSPORTATION

C*NECT

DRAINAGE PLAN
NOTES
E. 63RD ST./E. HAYES DR./S. CORNELL DR.

JACKSON PARK MOBILITY IMPROVEMENTS
STA. 4010+50 TO STA. 5001+50

| | |
|---|---|
| CONTRACT NO. | - |
| PROJECT NO. | B-7-203 |
| SCALE: NONE | |

| TOTAL SHEETS | SHEET NO. |
|---|---|
| 1434 | 471 |
| DRAWING NO. | DRN-41 |

## EXISTING CONDITIONS

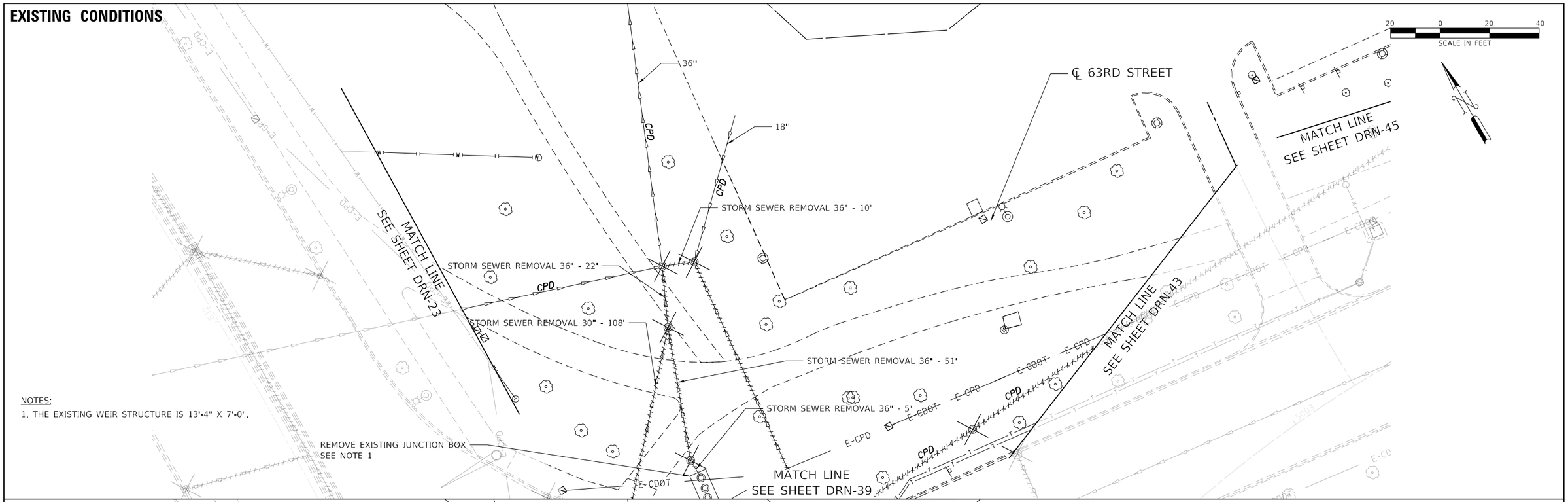


NOTES:

1. THE EXISTING WEIR STRUCTURE IS 13'-4" X 7'-0".

## PROPOSED CONDITIONS

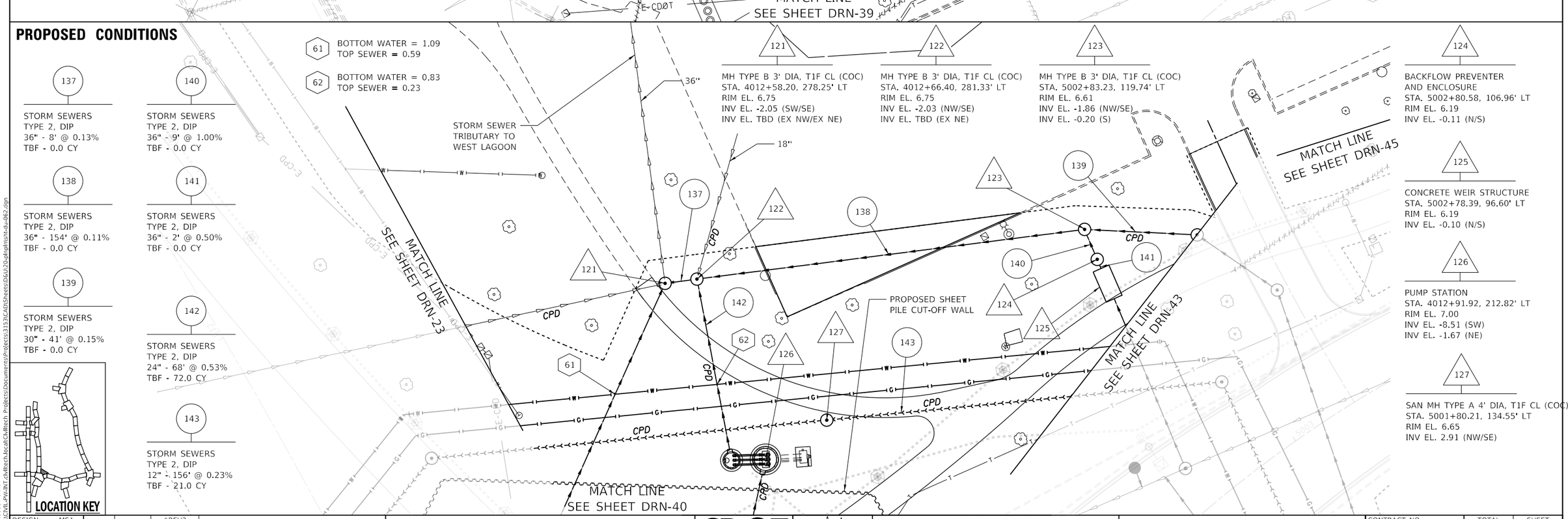


**137**
STORM SEWERS
TYPE 2, DIP
36" - 8' @ 0.13%
TBF - 0.0 CY

**138**
STORM SEWERS
TYPE 2, DIP
36" - 154' @ 0.11%
TBF - 0.0 CY

**139**
STORM SEWERS
TYPE 2, DIP
30" - 41' @ 0.15%
TBF - 0.0 CY

**140**
STORM SEWERS
TYPE 2, DIP
36" - 9' @ 1.00%
TBF - 0.0 CY

**141**
STORM SEWERS
TYPE 2, DIP
36" - 2' @ 0.50%
TBF - 0.0 CY

**142**
STORM SEWERS
TYPE 2, DIP
24" - 68' @ 0.53%
TBF - 72.0 CY

**143**
STORM SEWERS
TYPE 2, DIP
12" - 156' @ 0.23%
TBF - 21.0 CY

**121**
MH TYPE B 3' DIA, T1F CL (COC)
STA. 4012+58.20, 278.25' LT
RIM EL. 6.75
INV EL. -2.05 (SW/SE)
INV EL. TBD (EX NW/EX NE)

**122**
MH TYPE B 3' DIA, T1F CL (COC)
STA. 4012+66.40, 281.33' LT
RIM EL. 6.75
INV EL. -2.03 (NW/SE)
INV EL. TBD (EX NE)

**123**
MH TYPE B 3' DIA, T1F CL (COC)
STA. 5002+83.23, 119.74' LT
RIM EL. 6.61
INV EL. -1.86 (NW/SE)
INV EL. -0.20 (S)

**124**
BACKFLOW PREVENTER AND ENCLOSURE
STA. 5002+80.58, 106.96' LT
RIM EL. 6.19
INV EL. -0.11 (N/S)

**125**
CONCRETE WEIR STRUCTURE
STA. 5002+78.39, 96.60' LT
RIM EL. 6.19
INV EL. -0.10 (N/S)

**126**
PUMP STATION
STA. 4012+91.92, 212.82' LT
RIM EL. 7.00
INV EL. -8.51 (SW)
INV EL. -1.67 (NE)

**127**
SAN MH TYPE A 4' DIA, T1F CL (COC)
STA. 5001+80.21, 134.55' LT
RIM EL. 6.65
INV EL. 2.91 (NW/SE)




| | | | | |
|---|---|---|---|---|
| DESIGN: MSA | | | SREV3 | |
| DRAWN: MSA | | | SREV2 | |
| CHECKED: TKL | | | SREV1 | |
| APPROVED: | NO. | BY | DATE | DESCRIPTION |
| DATE: 03/26/2021 | REVISIONS | | | |

CHICAGO DEPARTMENT OF TRANSPORTATION

C*NECT

**DRAINAGE PLAN**
**EXISTING & PROPOSED CONDITIONS**
**E. 63RD ST./E. HAYES DR./S. CORNELL DR.**

**JACKSON PARK MOBILITY IMPROVEMENTS**

STA. N/A TO STA. N/A

| | |
|---|---|
| CONTRACT NO. - | TOTAL SHEETS 1434 |
| PROJECT NO. B-7-203 | SHEET NO. 472 |
| SCALE: 1"=20' | DRAWING NO. DRN-42 |

PLOT DATE: 5/17/2021
PLOT SCALE: 40.0000 ' / in.
FILE NAME: pw:\\CIVIL-PW-NT.cdot.tech.local:CivilTech Projects\Documents\Projects\3153\CADD\Sheets\DGN\20-drnplnsht-du-062.dgn

## EXISTING CONDITIONS

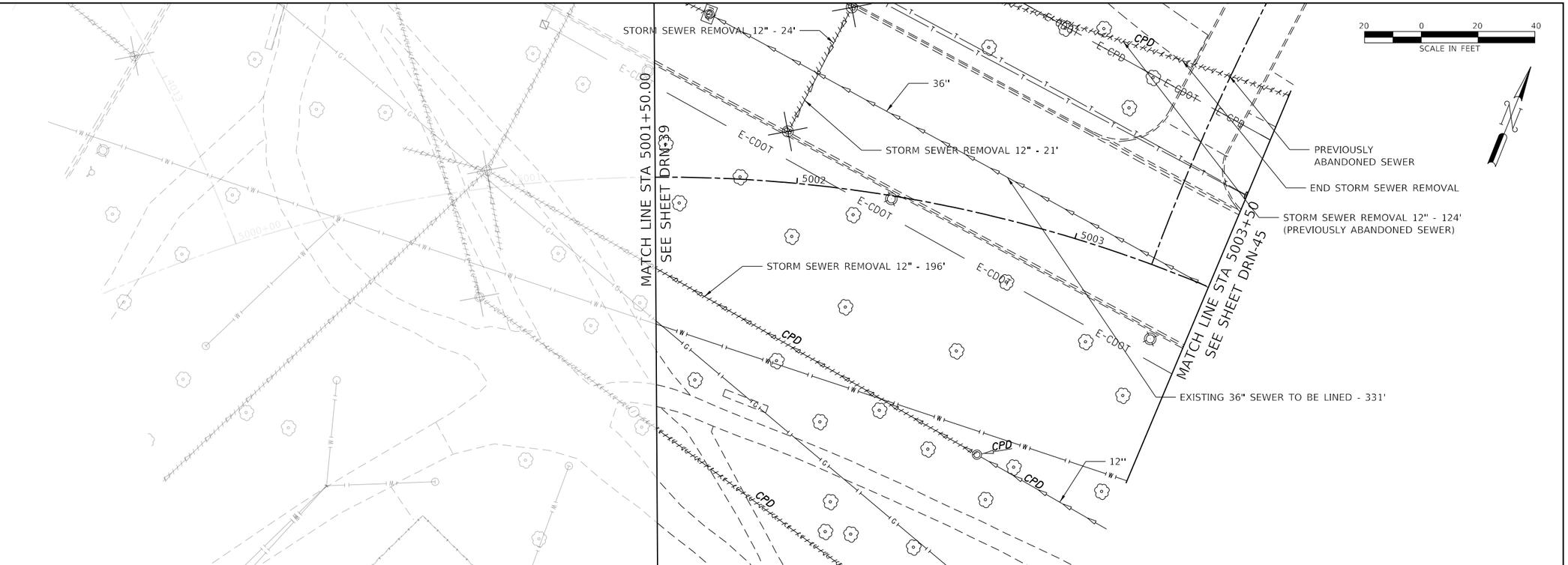


## PROPOSED CONDITIONS

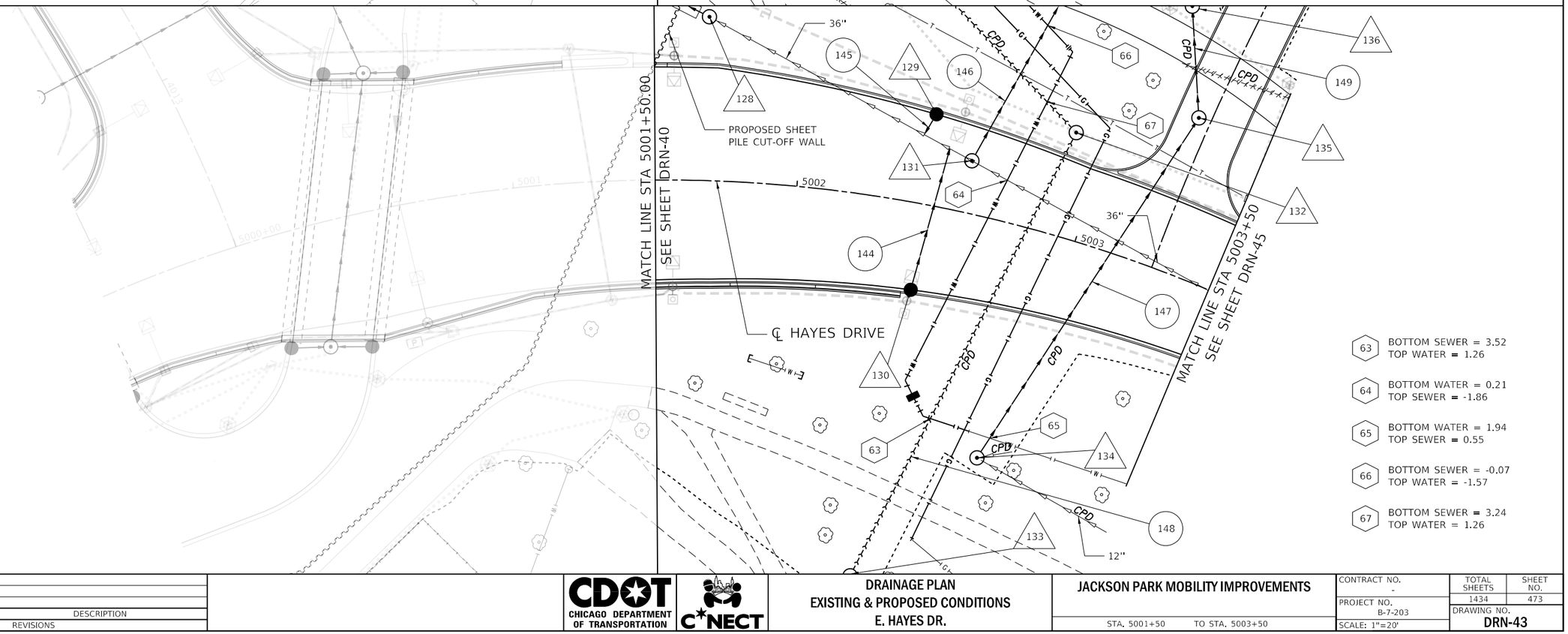


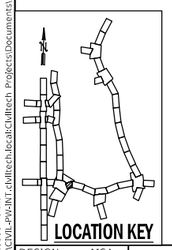


| DESIGN: MSA | | | $REV3 | |
|---|---|---|---|---|
| DRAWN: MSA | | | $REV2 | |
| CHECKED: TKL | | | $REV1 | |
| APPROVED: | NO. | BY | DATE | DESCRIPTION |
| DATE: 03/26/2021 | REVISIONS | | | |

CDOT CHICAGO DEPARTMENT OF TRANSPORTATION

C*NECT

**DRAINAGE PLAN**
**EXISTING & PROPOSED CONDITIONS**
**E. HAYES DR.**

**JACKSON PARK MOBILITY IMPROVEMENTS**

STA. 5001+50 TO STA. 5003+50

| CONTRACT NO. | TOTAL SHEETS | SHEET NO. |
|---|---|---|
| - | 1434 | 473 |
| PROJECT NO. B-7-203 | DRAWING NO. DRN-43 | |
| SCALE: 1"=20' | | |

PLOT DATE: 5/17/2021
PLOT SCALE: 40.0000 ' / in.
FILE NAME: pw:\\CIVIL-PW-INT.civiltech.local:CivilTech Projects\Documents\Projects\3153\CADD\Sheets\D&J\20-plnpln\sht-du-033.dgn

128

MH TYPE A 6' DIA W/2 T1FCL RP
STA. 5001+67.46, 57.66 LT
RIM EL. 8.33
INV EL. -4.96 (E)
INV EL. -5.11 (W)

129

CB TYPE A 4' DIA, T1F OL (COC)
STA. 5002+43.77, 31.95 LT
RIM EL. 9.84
INV EL. 5.34 (S)

130

CB TYPE A 4' DIA, T1F OL (COC)
STA. 5002+46.26, 30.42' RT
RIM EL. 9.77
INV EL. 5.27 (N)

131

TUMBLING BASIN, 72" DIA
STA. 5002+58.46, 18.35' LT
RIM EL. 9.75
INV EL. -0.01 (N)
INV EL. -4.92 (EX E/EX W)
2' SUMP

132

SAN MH TYPE A 4' DIA, T1F CL (COC)
STA. 5002+89.96, 36.89 LT
RIM EL. 7.73
INV EL. 3.27 (NW/S)

133

SAN MH TYPE A 4' DIA, T1F CL (COC)
STA. 5002+43.33, 133.28 RT
RIM EL. 7.70
INV EL. 3.65 (N)

134

TUMBLING BASIN, 72" DIA
STA. 5002+87.10, 82.74' RTI
RIM EL. 8.13
INV EL. -1.48 (N)
INV EL. 3.33 (EX E)
INV EL. 4.03 (EX NE)
NO SUMP REQUIRED

135

MH TYPE A 5' DIA, T1F CL (COC)
STA. 5003+26.08, 55.12' LT
RIM EL. 6.76
INV EL. -1.75 (S/NW)

136

MH TYPE A 6' DIA, T1F CL (COC)
STA. 5003+12.89, 91.50' LT
RIM EL. 6.73
INV EL. -1.80 (S/NW)

144

STORM SEWERS
TYPE 2, ESVCP
8" - 49' @ 0.60%
TBF - 53.0 CY

145

STORM SEWERS
TYPE 3, ESVCP
8" - 6' @ 1.00%
TBF - 10.0 CY

146

STORM SEWERS
TYPE 2, DIP
36" - 73' @ 0.12%
TBF - 66.0 CY

147

STORM SEWERS
TYPE 2, DIP
24" - 138' @ 0.20%
TBF - 151.0 CY

148

SANITARY SEWERS
TYPE 2, DIP
12" - 171' @ 0.22%
TBF - 25.0 CY

149

STORM SEWERS
TYPE 2, DIP
30" - 34' @ 0.15%
TBF - 36.0 CY

PLOT DATE: 5/17/2021
PLOT SCALE: 40.0000 ' / in.
FILE NAME: pw:\\CIVIL-PW-INT.civiltech.local:Civiltech Projects\Documents\Projects\3153\CAD\Sheets\D&U\20-plnpln\sht-du-033b.dgn

| | | | | |
|---|---|---|---|---|
| DESIGN: MSA | | | | |
| DRAWN: MSA | | | | |
| CHECKED: TKL | | | | |
| APPROVED: | NO. | BY | DATE | DESCRIPTION |
| DATE: 03/26/2021 | REVISIONS | | | |

CDOT CHICAGO DEPARTMENT OF TRANSPORTATION

C*NECT

DRAINAGE PLAN
NOTES
E. HAYES DR.

JACKSON PARK MOBILITY IMPROVEMENTS

STA. 5001+50 TO STA. 5003+50

CONTRACT NO. -
PROJECT NO. B-7-203
SCALE: NONE

TOTAL SHEETS 1434
SHEET NO. 474
DRAWING NO. DRN-44

## EXISTING CONDITIONS

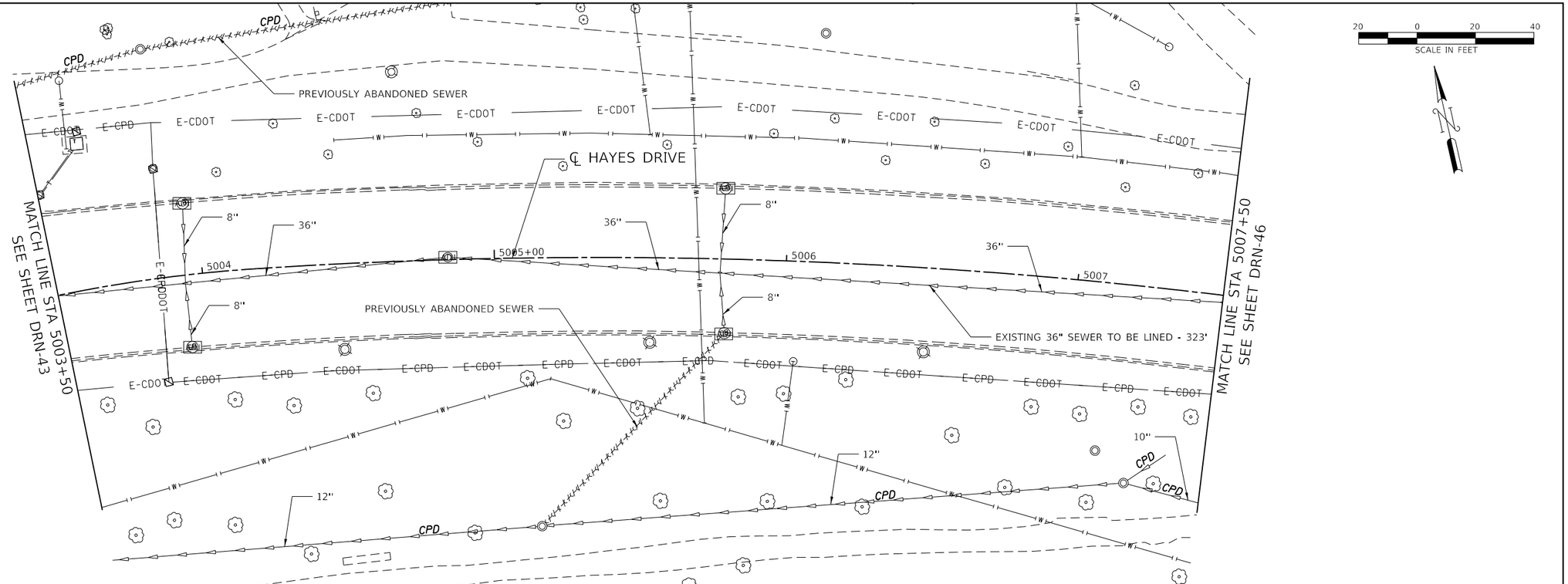


## PROPOSED CONDITIONS

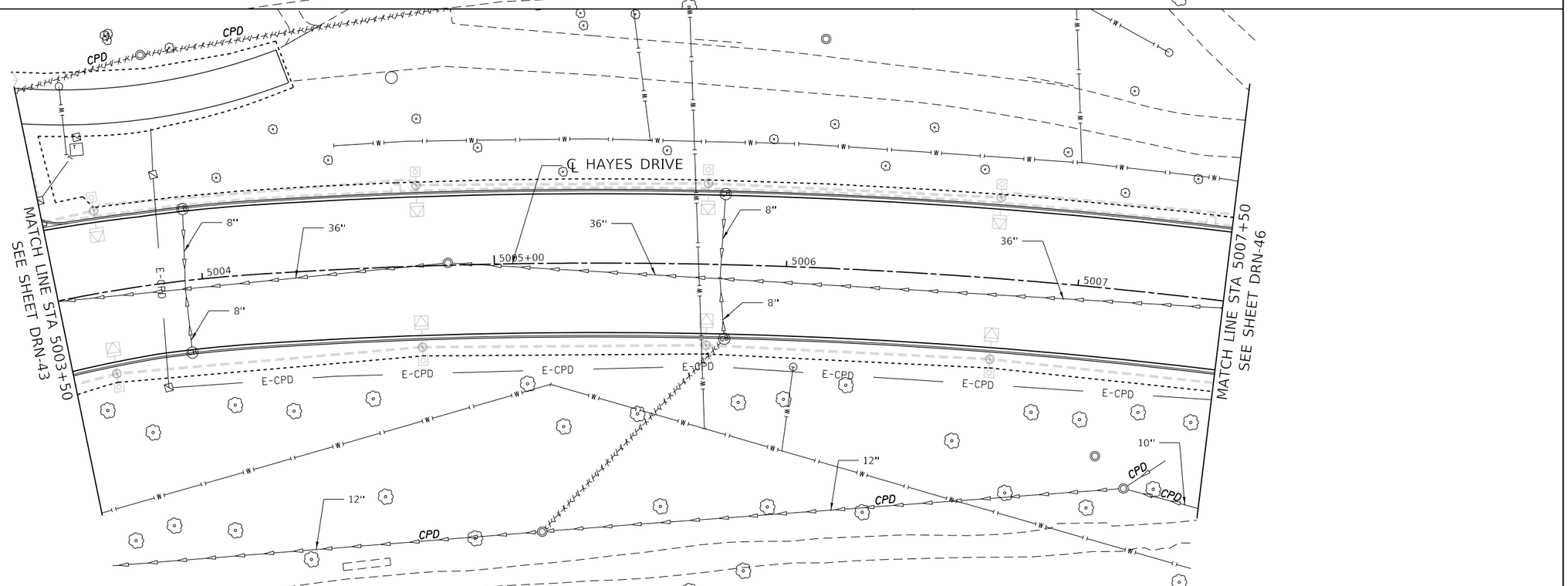


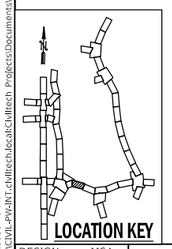


LOCATION KEY

| | | | | |
|---|---|---|---|---|
| DESIGN: MSA | | | $REV3 | |
| DRAWN: MSA | | | $REV2 | |
| CHECKED: TKL | | | $REV1 | |
| APPROVED: | NO. | BY | DATE | DESCRIPTION |
| DATE: 01/22/2021 | REVISIONS | | | |

CDOT CHICAGO DEPARTMENT OF TRANSPORTATION

C*NECT

DRAINAGE PLAN
EXISTING & PROPOSED CONDITIONS
E. HAYES DR.

JACKSON PARK MOBILITY IMPROVEMENTS

STA. 5003+50 TO STA. 5007+50

| | | |
|---|---|---|
| CONTRACT NO. - | TOTAL SHEETS 1434 | SHEET NO. 475 |
| PROJECT NO. B-7-203 | DRAWING NO. DRN-45 | |
| SCALE: 1"=20' | | |

PLOT DATE: 5/17/2021
PLOT SCALE: 40.0000 ' / in.
FILE NAME: pw:\\CIVIL-PW-INT.civiltech.local:Civiltech Projects\Documents\Projects\3153\CAD\Sheets\D&U\20-plnpln\sht-du-034.dgn

## EXISTING CONDITIONS

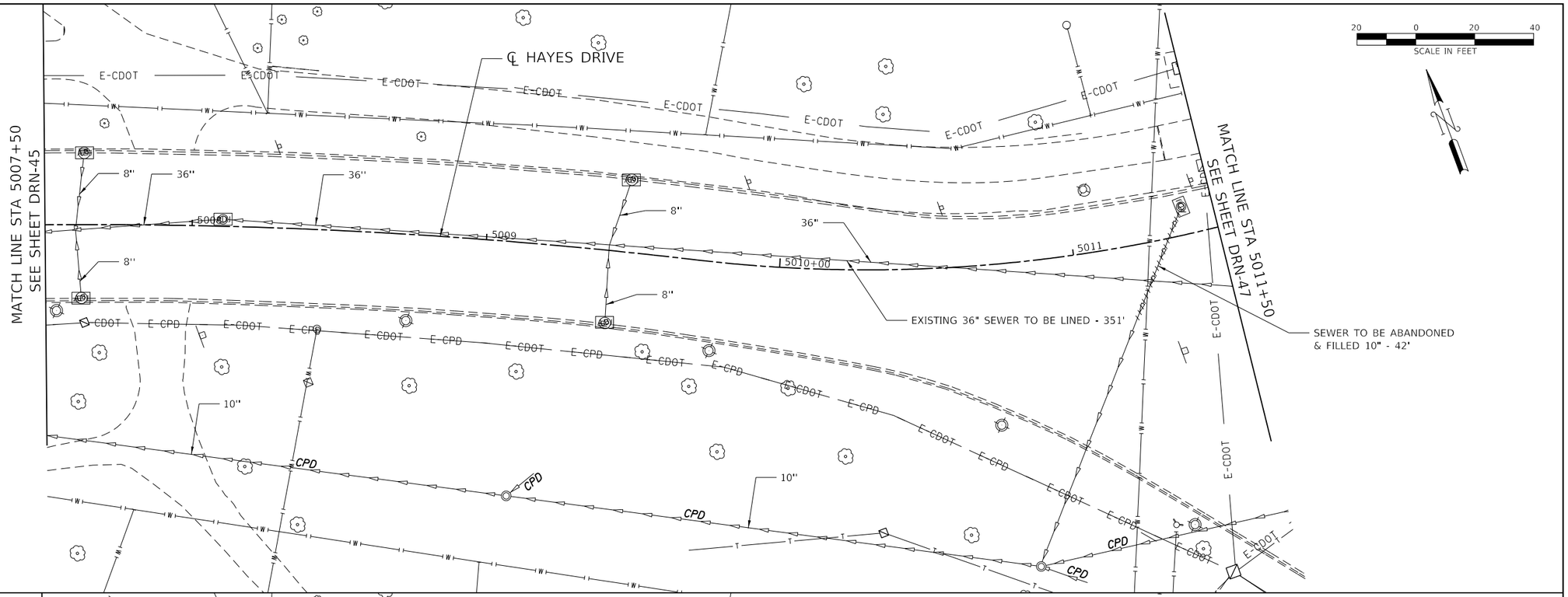


## PROPOSED CONDITIONS

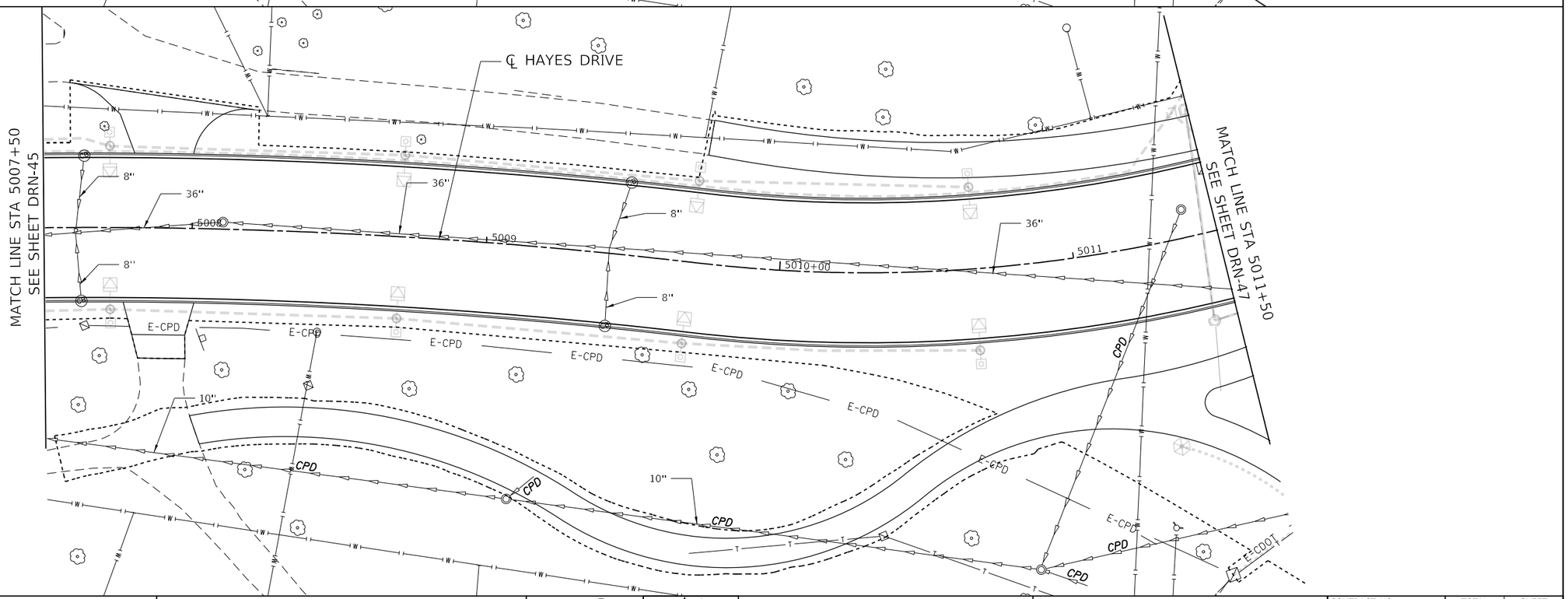


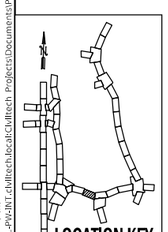

LOCATION KEY

| | | | | | |
|---|---|---|---|---|---|
| DESIGN: | MSA | | | $REV3 | |
| DRAWN: | MSA | | | $REV2 | |
| CHECKED: | TKL | | | $REV1 | |
| APPROVED: | | NO. | BY | DATE | DESCRIPTION |
| DATE: 01/22/2021 | | | | REVISIONS | |

CDOT CHICAGO DEPARTMENT OF TRANSPORTATION

C*NECT

DRAINAGE PLAN
EXISTING & PROPOSED CONDITIONS
E. HAYES DR.

JACKSON PARK MOBILITY IMPROVEMENTS

STA. 5007+50 TO STA. 5011+50

| | | |
|---|---|---|
| CONTRACT NO. - | TOTAL SHEETS 1434 | SHEET NO. 476 |
| PROJECT NO. B-7-203 | DRAWING NO. DRN-46 | |
| SCALE: 1"=20' | | |

PLOT DATE: 5/17/2021
PLOT SCALE: 40.0000 ' / in.
FILE NAME: pw:\\CIVIL-PW-INT.civiltech.local:Civiltech Projects\Documents\Projects\3153\CAD\Sheets\D&U\20-plnpln\sht-du-035.dgn

## EXISTING CONDITIONS

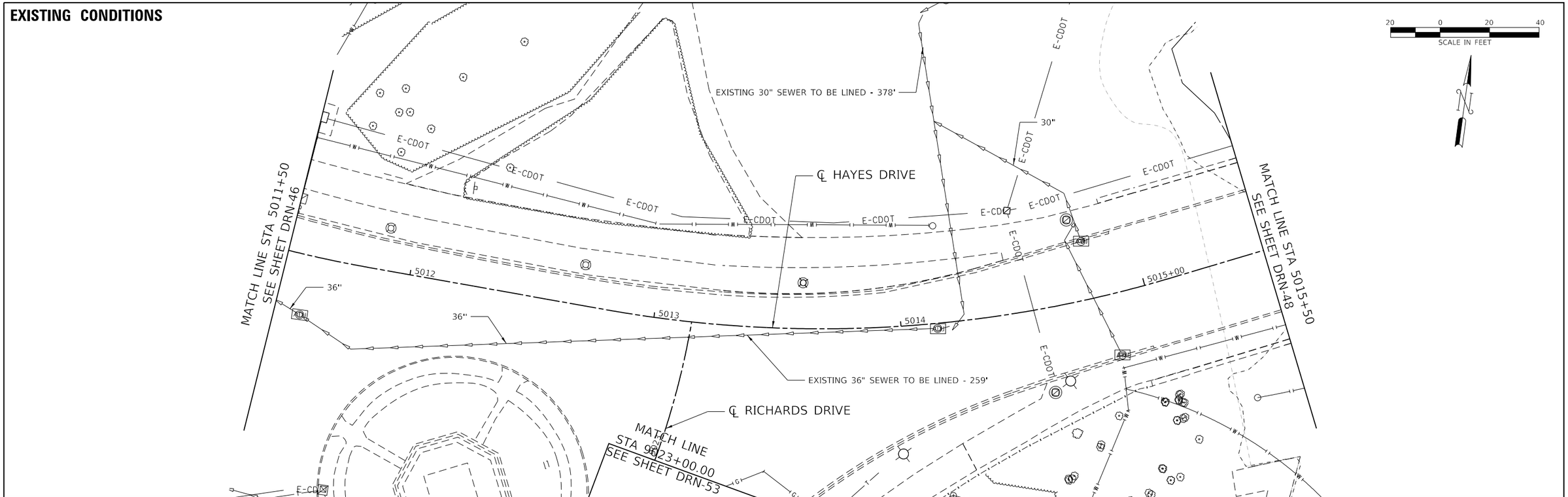


## PROPOSED CONDITIONS

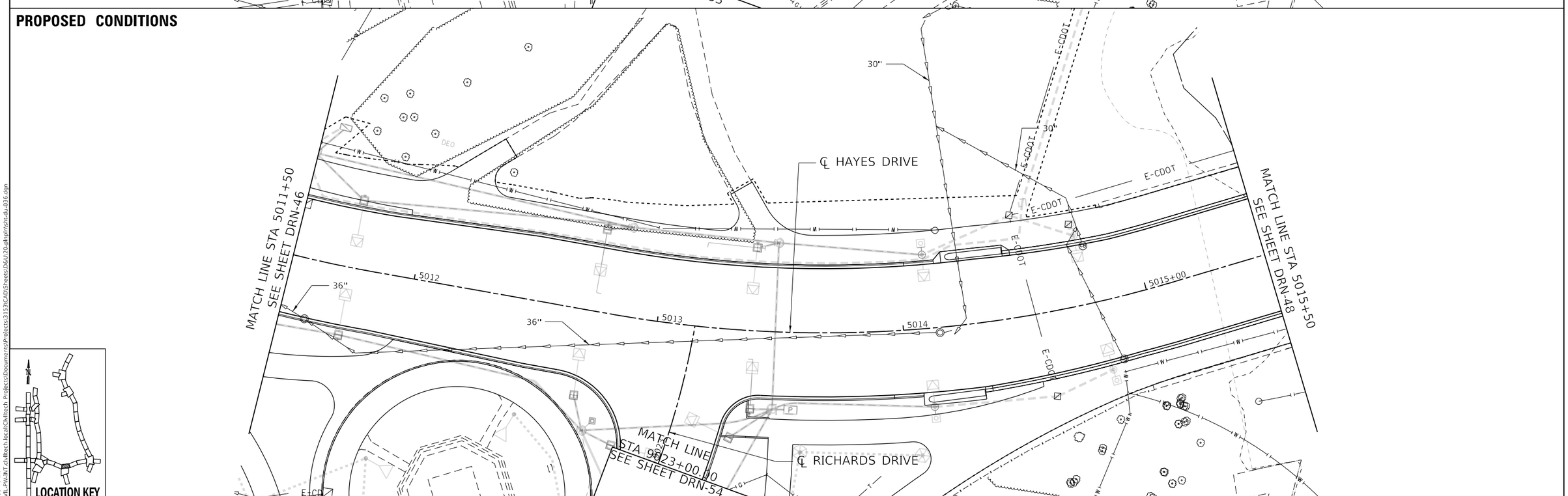


| | | | | |
|---|---|---|---|---|
| DESIGN: MSA | | | SREV3 | |
| DRAWN: MSA | | | SREV2 | |
| CHECKED: TKL | | | SREV1 | |
| APPROVED: | NO. | BY | DATE | DESCRIPTION |
| DATE: 01/22/2021 | REVISIONS | | | |

CDOT CHICAGO DEPARTMENT OF TRANSPORTATION

C*NECT

DRAINAGE PLAN
EXISTING & PROPOSED CONDITIONS
E. HAYES DR.

JACKSON PARK MOBILITY IMPROVEMENTS

STA. 5011+50 TO STA. 5015+50

| | | |
|---|---|---|
| CONTRACT NO. - | TOTAL SHEETS 1434 | SHEET NO. 477 |
| PROJECT NO. B-7-203 | DRAWING NO. DRN-47 | |
| SCALE: 1"=20' | | |

PLOT DATE: 5/17/2021
PLOT SCALE: 40.0000 ' / in.
FILE NAME: pw:\\CIVIL-PW-INT.civiltech.local:Civiltech Projects\Documents\Projects\3153\CAD\Sheets\D&U\20-plnpln\sht-du-036.dgn

## EXISTING CONDITIONS

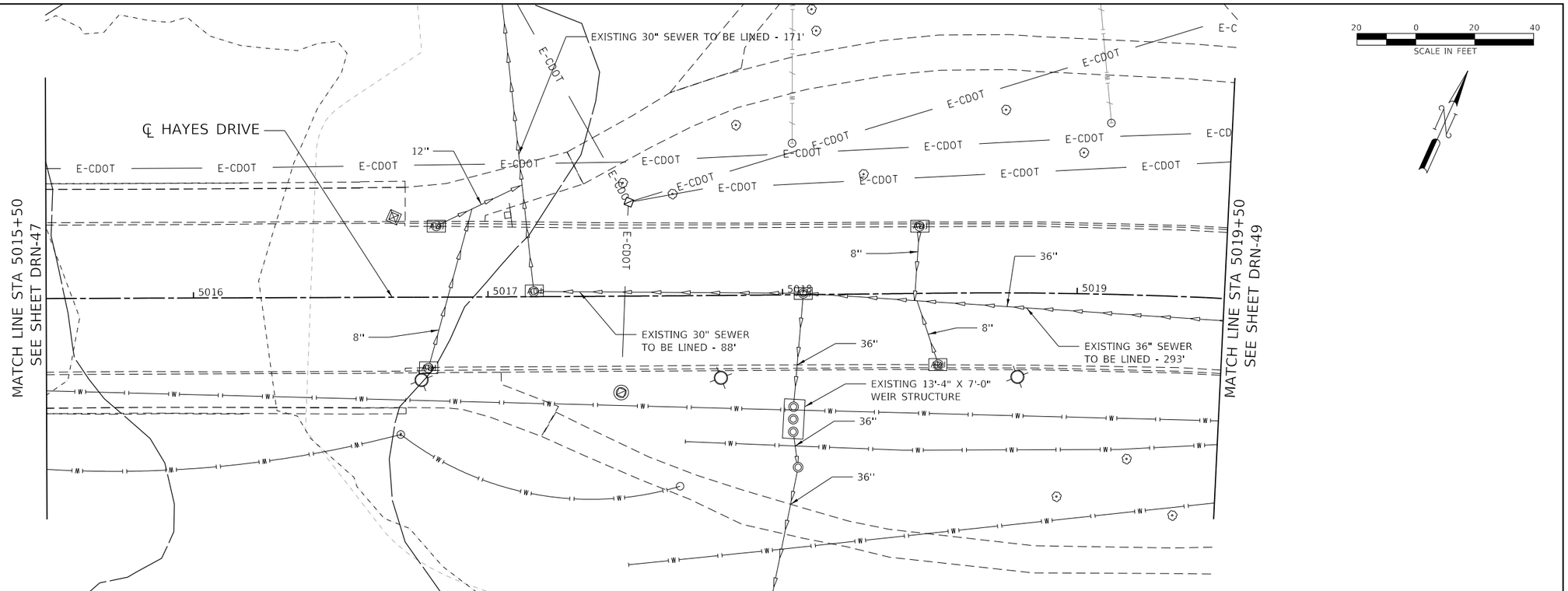


## PROPOSED CONDITIONS

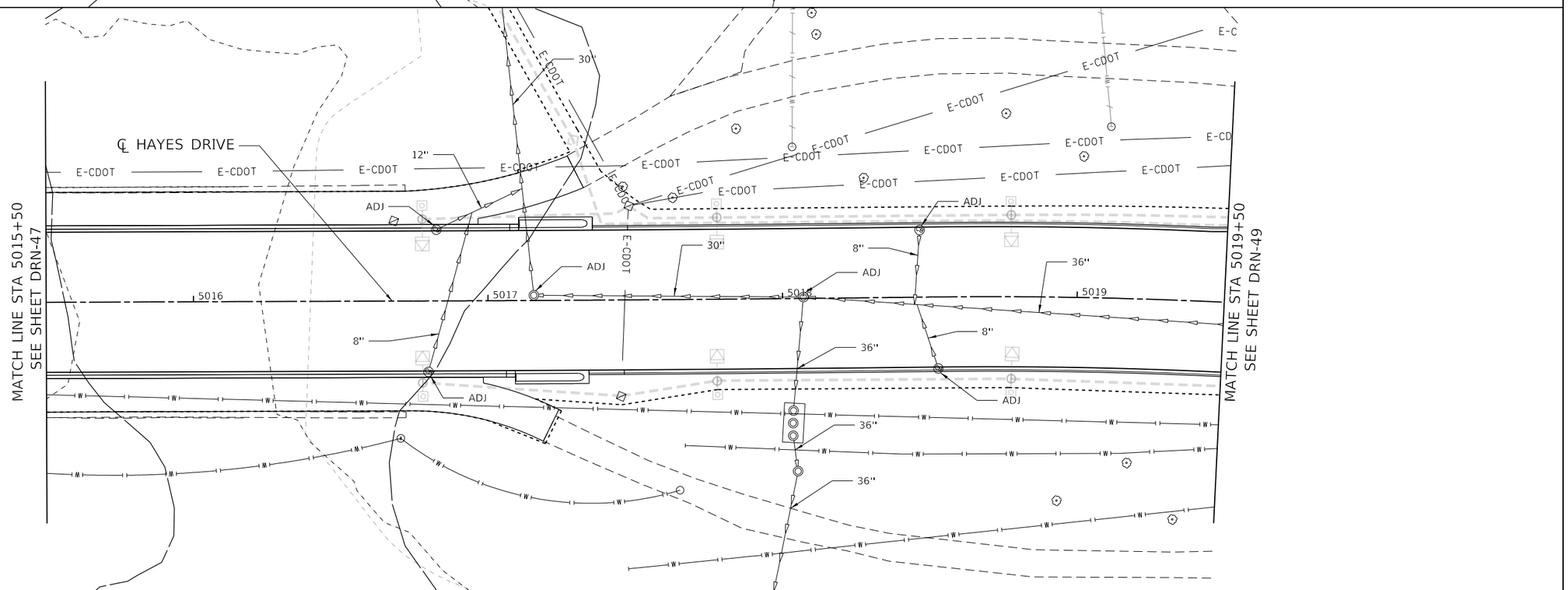


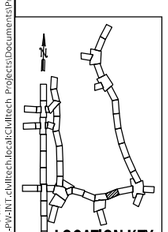

LOCATION KEY

PLOT DATE: 5/17/2021
PLOT SCALE: 40.0000 ' / in.
FILE NAME: pw:\\CIVIL-PW-INT.civiltech.local:Civiltech Projects\Documents\Projects\3153\CAD\Sheets\D&U\20-plnpln\sht-du-037.dgn

| DESIGN: MSA | | | $REV3 | |
|---|---|---|---|---|
| DRAWN: MSA | | | $REV2 | |
| CHECKED: TKL | | | $REV1 | |
| APPROVED: | NO. | BY | DATE | DESCRIPTION |
| DATE: 01/22/2021 | REVISIONS | | | |

CDOT CHICAGO DEPARTMENT OF TRANSPORTATION

C*NECT

DRAINAGE PLAN
EXISTING & PROPOSED CONDITIONS
E. HAYES DR.

JACKSON PARK MOBILITY IMPROVEMENTS

STA. 5015+50 TO STA. 5019+50

| CONTRACT NO. - | TOTAL SHEETS | SHEET NO. |
|---|---|---|
| PROJECT NO. B-7-203 | 1434 | 478 |
| SCALE: 1"=20' | DRAWING NO. DRN-48 | |

## EXISTING CONDITIONS

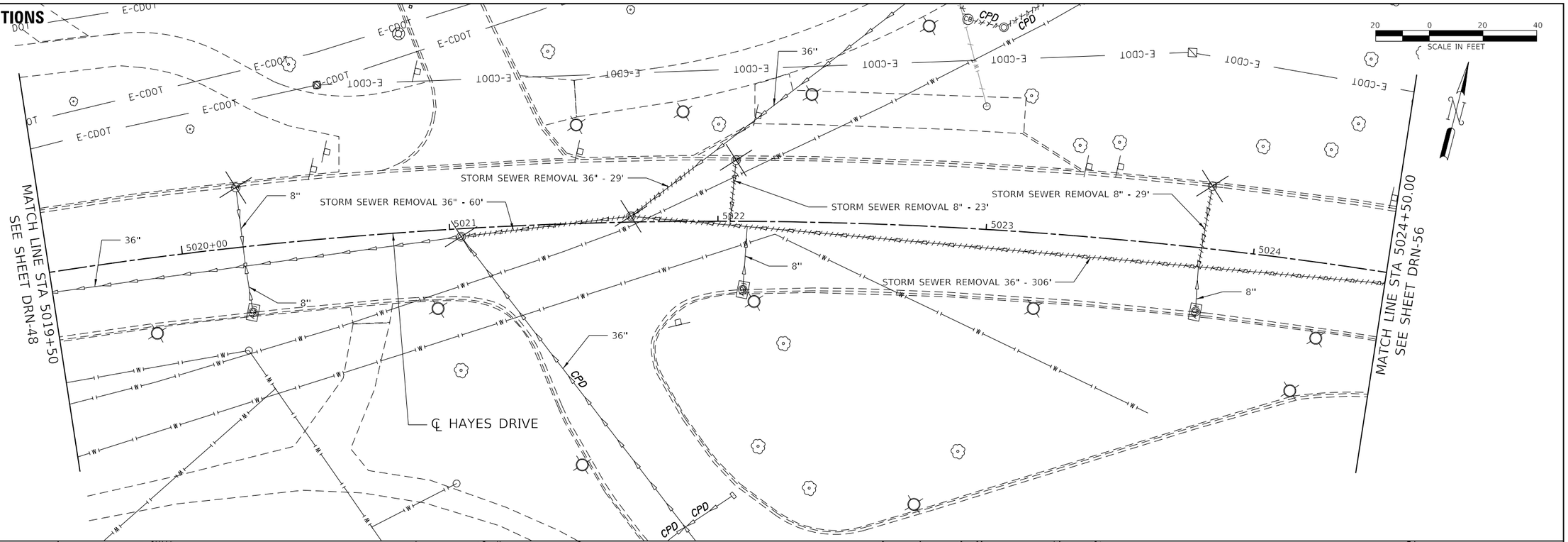


## PROPOSED CONDITIONS

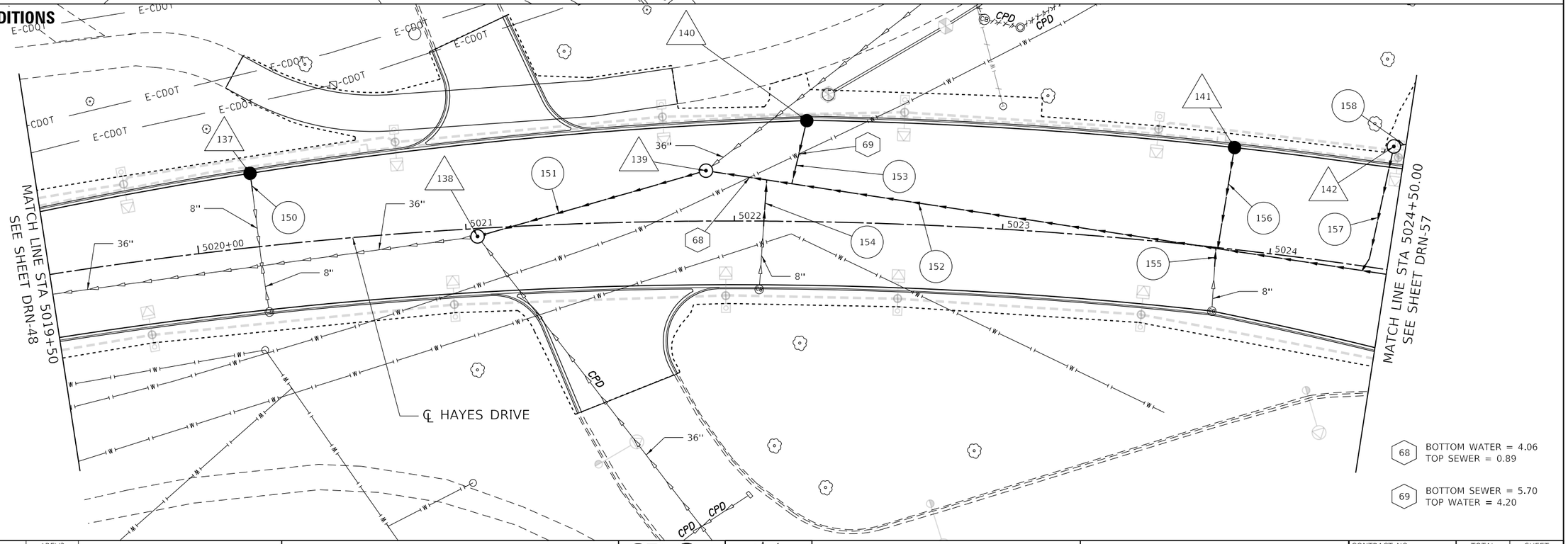


68 BOTTOM WATER = 4.06
TOP SEWER = 0.89

69 BOTTOM SEWER = 5.70
TOP WATER = 4.20

LOCATION KEY

| | | | | | |
|---|---|---|---|---|---|
| DESIGN: MSA | | | | $REV3 | |
| DRAWN: MSA | | | | $REV2 | |
| CHECKED: TKL | | | | $REV1 | |
| APPROVED: | NO. | BY | DATE | DESCRIPTION | |
| DATE: 03/26/2021 | REVISIONS | | | | |

CHICAGO DEPARTMENT OF TRANSPORTATION

C★NECT

DRAINAGE PLAN
EXISTING & PROPOSED CONDITIONS
E. HAYES DR.

JACKSON PARK MOBILITY IMPROVEMENTS

STA. 5019+50 TO STA. 5024+50

| | | | |
|---|---|---|---|
| CONTRACT NO. - | | TOTAL SHEETS | SHEET NO. |
| PROJECT NO. B-7-203 | | 1434 | 479 |
| SCALE: 1"=20' | | DRAWING NO. DRN-49 | |

PLOT DATE: 5/17/2021
PLOT SCALE: 40.0000 ' / in.
FILE NAME: pw:\\CTVIL-PW-INT.cbultech.local\Civiltech Projects\Documents\Projects\3153\CADSheets\D&U\20-plnpln\sht-du-438.dgn

137

CB TYPE A 4' DIA, T1F OL (COC)
STA. 5020+22.25, 27.56' LT
RIM EL. 10.99
INV EL. 6.49 (SE)

138

MH TYPE B 3' DIA, T1F CL (COC)
STA. 5021+04.14, 2.96' LT
RIM EL. 10.74
INV EL. -2.27 (NE)
INV EL. -2.27 (EX SW/EX SE)

139

MH TYPE B 3' DIA, T1F CL (COC)
STA. 5021+89.56, 18.80' LT
RIM EL. 9.90
INV EL. -2.17 (SE/W)
INV EL. -1.86 (EX NE)

140

CB TYPE A 4' DIA, T1F OL (COC)
STA. 5022+26.40, 37.62' LT
RIM EL. 9.31
INV EL. 5.76 (SE)

141

CB TYPE A 4' DIA, T1F OL (COC)
STA. 5023+82.51, 38.75' LT
RIM EL. 8.36
INV EL. 3.86 (S)

142

MH TYPE A 4' DIA, T1F CL (COC)
STA. 5024+39.87, 45.78' LT
RIM EL. 9.00
INV EL. -0.29 (NW/S)

150

STORM SEWERS
TYPE 3, ESVCP
8" - 5' @ 0.54%
TBF - 1.0 CY

151

STORM SEWERS
TYPE 2, RCP
36" - 84' @ 0.12%
TBF - 169.0 CY

152

STORM SEWERS
TYPE 2, RCP
36" - 311' @ 0.11%
TBF - 517.0 CY

153

STORM SEWERS
TYPE 2, ESVCP
8" - 22' @ 0.54%
TBF - 4.0 CY

154

STORM SEWERS
TYPE 2, ESVCP
8" - 18' @ 0.54%
TBF - 6.0 CY

155

STORM SEWERS
TYPE 2, ESVCP
8" - 7' @ 0.54%
TBF - 3.0 CY

156

STORM SEWERS
TYPE 2, ESVCP
8" - 36' @ 0.54%
TBF - 9.0 CY

157

STORM SEWERS
TYPE 2, ESVCP
18" - 46' @ 0.26%
TBF - 54.0 CY

158

STORM SEWERS
TYPE 2, DIP
18" - 5' @ 1.00%
TBF - 0.0 CY

PLOT DATE: 5/17/2021
PLOT SCALE: 40.0000 ' / in.
FILE NAME: pw:\\CIVIL-PW-INT.civiltech.local:Civiltech Projects\Documents\Projects\3153\CAD\Sheets\D&U\20-plnpln\sht-du-038b.dgn

| | | | | |
|---|---|---|---|---|
| DESIGN: MSA | | | | |
| DRAWN: MSA | | | | |
| CHECKED: TKL | | | | |
| APPROVED: | NO. | BY | DATE | DESCRIPTION |
| DATE: 01/22/2021 | REVISIONS | | | |

CDOT CHICAGO DEPARTMENT OF TRANSPORTATION

C*NECT

DRAINAGE PLAN
NOTES
E. HAYES DR.

JACKSON PARK MOBILITY IMPROVEMENTS

STA. 5019+50 TO STA. 5024+50

CONTRACT NO. -
PROJECT NO. B-7-203
SCALE: NONE

| TOTAL SHEETS | SHEET NO. |
|---|---|
| 1434 | 480 |

DRAWING NO. DRN-50

## EXISTING CONDITIONS

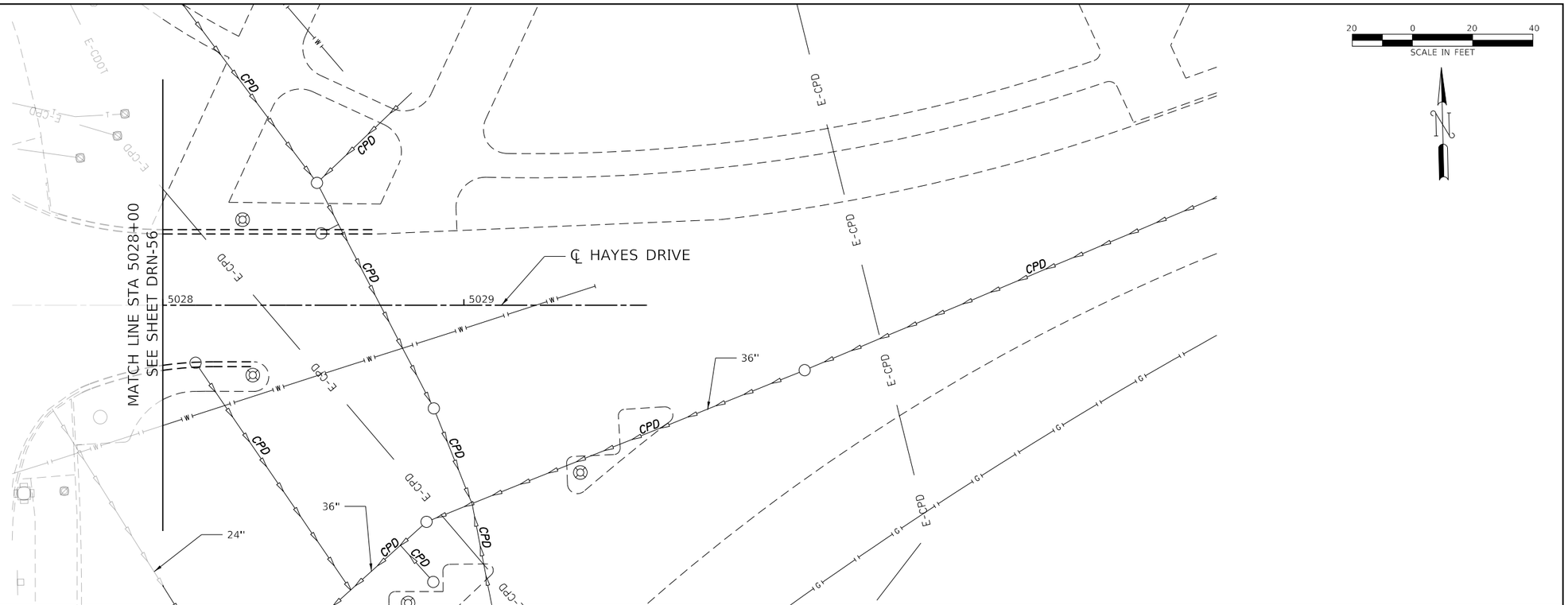


## PROPOSED CONDITIONS

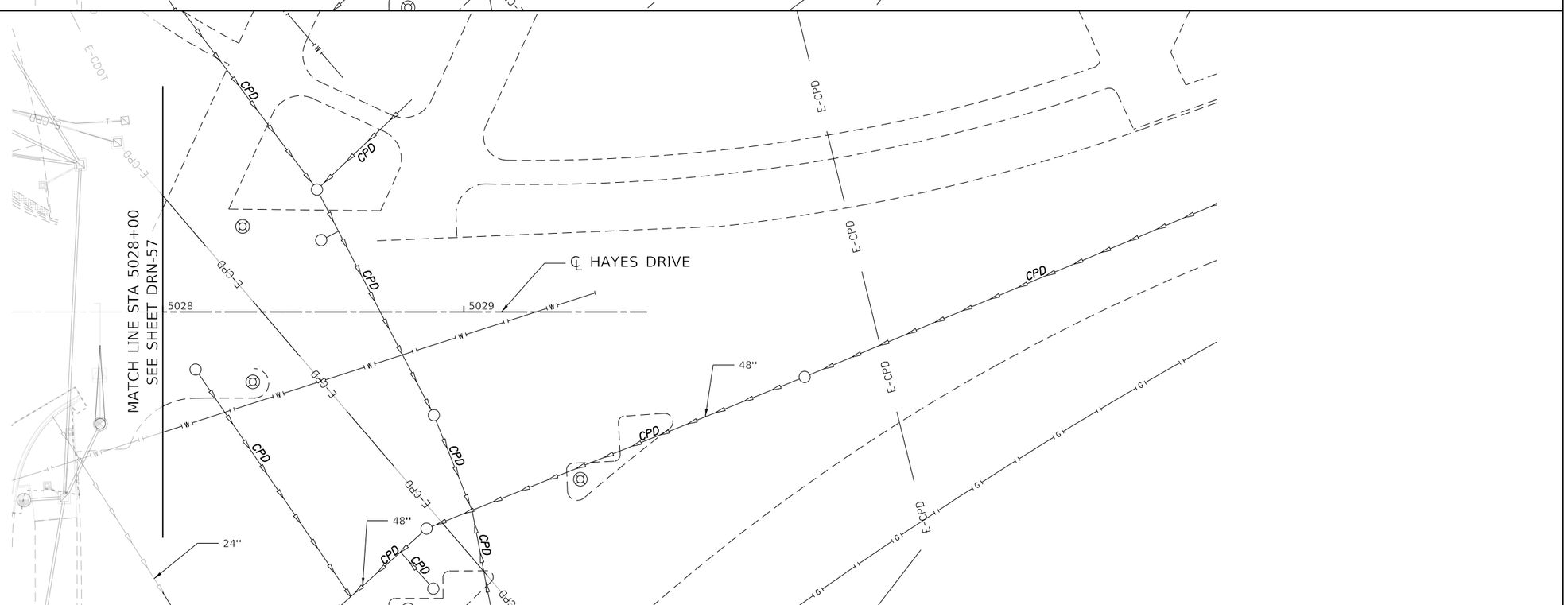


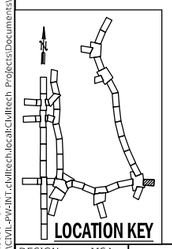


| | | | | |
|---|---|---|---|---|
| DESIGN: MSA | | | $REV3 | |
| DRAWN: MSA | | | $REV2 | |
| CHECKED: TKL | | | $REV1 | |
| APPROVED: | NO. | BY | DATE | DESCRIPTION |
| DATE: 01/22/2021 | REVISIONS | | | |

CDOT CHICAGO DEPARTMENT OF TRANSPORTATION

C*NECT

DRAINAGE PLAN
EXISTING & PROPOSED CONDITIONS
E. HAYES DR.

JACKSON PARK MOBILITY IMPROVEMENTS

STA. 5028+00 TO STA. 5029+50

| | | |
|---|---|---|
| CONTRACT NO. - | TOTAL SHEETS 1434 | SHEET NO. 481 |
| PROJECT NO. B-7-203 | DRAWING NO. DRN-51 | |
| SCALE: 1"=20' | | |

PLOT DATE: 5/17/2021
PLOT SCALE: 40.0000 ' / in.
FILE NAME: pw:\\CIVIL-PW-INT.civiltech.local:Civiltech Projects\Documents\Projects\3153\CAD\Sheets\D&U\20-plnpln\sht-du-040.dgn

## EXISTING CONDITIONS

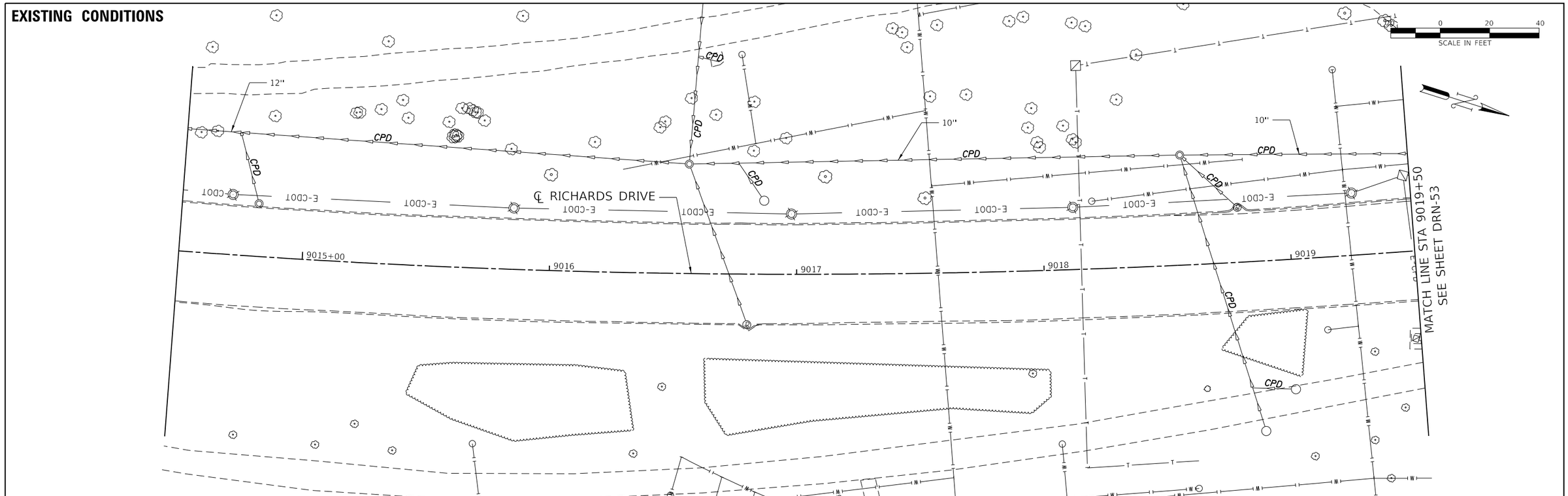


## PROPOSED CONDITIONS

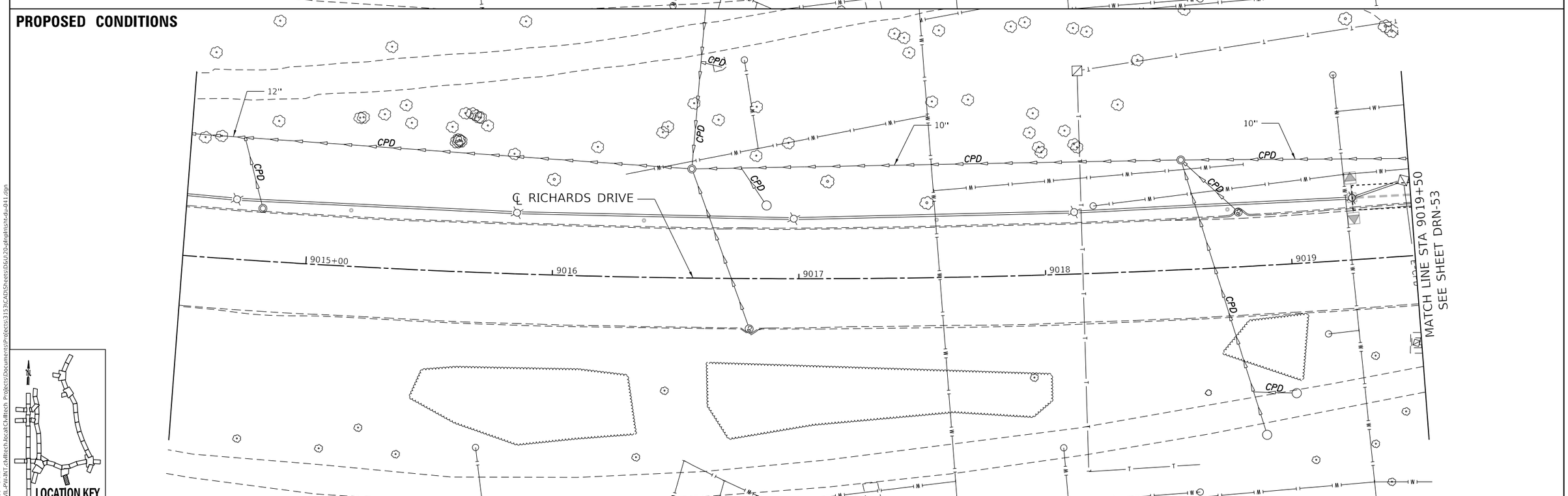





LOCATION KEY

PLOT DATE: 5/17/2021
PLOT SCALE: 40.0000 ' / in.
FILE NAME: pw:\\CIVIL-PW-INT.civiltech.local:Civiltech Projects\Documents\Projects\3153\CAD\Sheets\D&U\20-plnpln\sht-du-041.dgn

| | | | | | |
|---|---|---|---|---|---|
| DESIGN: | MSA | | | $REV3 | |
| DRAWN: | MSA | | | $REV2 | |
| CHECKED: | TKL | | | $REV1 | |
| APPROVED: | | NO. | BY | DATE | DESCRIPTION |
| DATE: 01/22/2021 | | REVISIONS | | | |

CDOT CHICAGO DEPARTMENT OF TRANSPORTATION

C*NECT

DRAINAGE PLAN
EXISTING & PROPOSED CONDITIONS
S. RICHARDS DR.

JACKSON PARK MOBILITY IMPROVEMENTS

STA. 9014+50 TO STA. 9019+50

| | | |
|---|---|---|
| CONTRACT NO. - | TOTAL SHEETS 1434 | SHEET NO. 482 |
| PROJECT NO. B-7-203 | DRAWING NO. DRN-52 | |
| SCALE: 1"=20' | | |

# EXISTING CONDITIONS

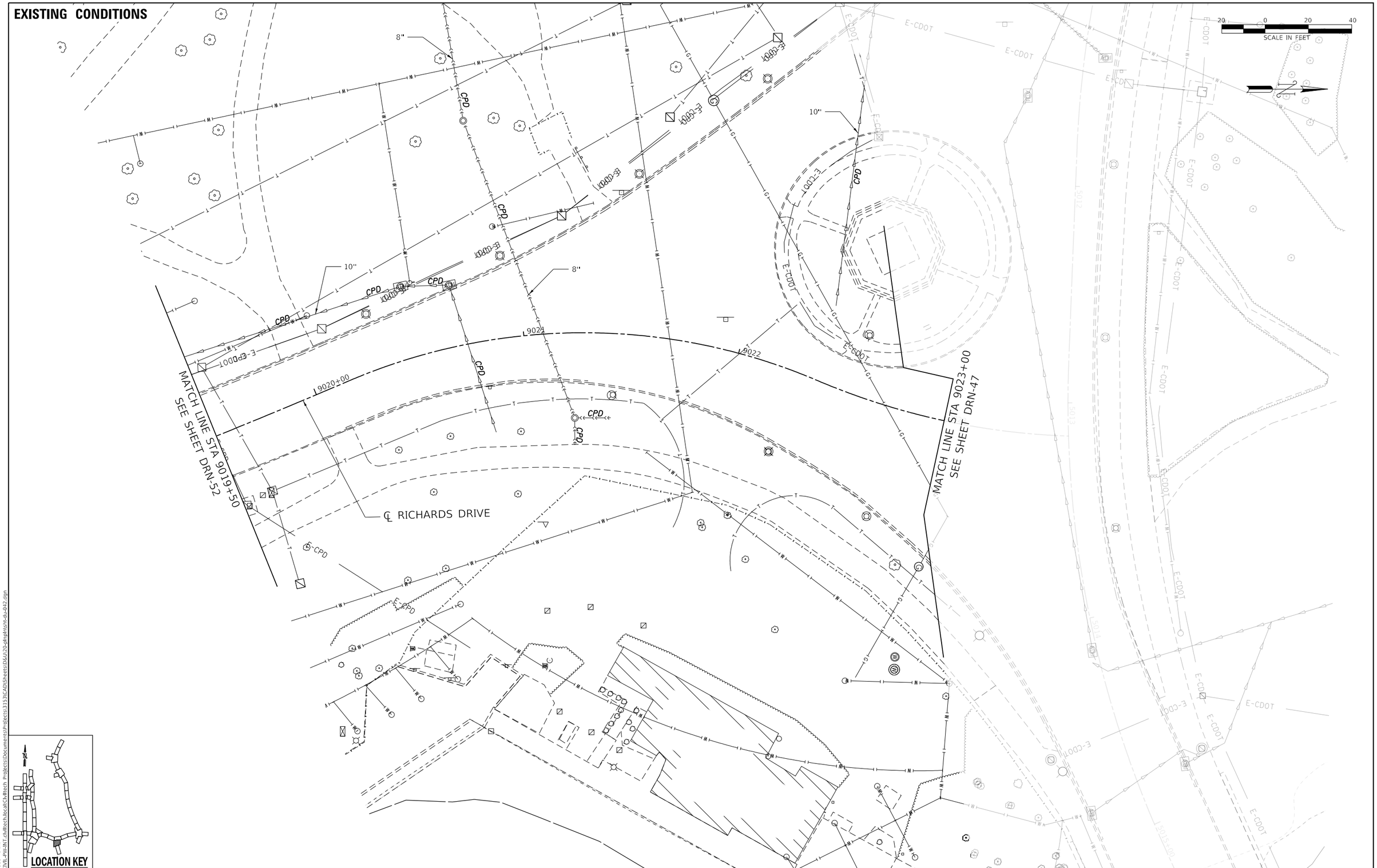


| | | | | | |
|---|---|---|---|---|---|
| DESIGN: MSA | | | | | |
| DRAWN: MSA | | | | | |
| CHECKED: TKL | | | | | |
| APPROVED: | NO. | BY | DATE | DESCRIPTION | |
| DATE: 01/22/2021 | REVISIONS | | | | |

CDOT CHICAGO DEPARTMENT OF TRANSPORTATION

C*NECT

DRAINAGE PLAN
EXISTING CONDITIONS
S. RICHARDS DR.

JACKSON PARK MOBILITY IMPROVEMENTS

STA. 9019+50 TO STA. 9023+00

| | | |
|---|---|---|
| CONTRACT NO. - | TOTAL SHEETS 1434 | SHEET NO. 483 |
| PROJECT NO. B-7-203 | DRAWING NO. DRN-53 | |
| SCALE: 1"=20' | | |

PLOT DATE: 5/17/2021
PLOT SCALE: 40.0000 ' / in.
FILE NAME: pw:\\CIVIL-PW-INT.civiltech.local:Civiltech Projects\Documents\Projects\3153\CAD\Sheets\D&U\20-plnpln\sht-du-042.dgn

## PROPOSED CONDITIONS




| | | | | | |
|---|---|---|---|---|---|
| DESIGN: MSA | | | | | |
| DRAWN: MSA | | | | | |
| CHECKED: TKL | | | | | |
| APPROVED: | NO. | BY | DATE | DESCRIPTION | |
| DATE: 01/22/2021 | REVISIONS | | | | |

CDOT CHICAGO DEPARTMENT OF TRANSPORTATION

C*NECT

DRAINAGE PLAN
PROPOSED CONDITIONS
S. RICHARDS DR.

JACKSON PARK MOBILITY IMPROVEMENTS

STA. 9019+50 TO STA. 9023+00

| | | |
|---|---|---|
| CONTRACT NO. - | TOTAL SHEETS 1434 | SHEET NO. 484 |
| PROJECT NO. B-7-203 | DRAWING NO. DRN-54 | |
| SCALE: 1"=20' | | |

PLOT DATE: 5/17/2021
PLOT SCALE: 40.0000 ' / in.
FILE NAME: pw:\\CIVIL-PW-INT.civiltech.local:Civiltech Projects\Documents\Projects\3153\CAD\Sheets\D&U\20-plnpln\sht-du-063.dgn

## EXISTING CONDITIONS

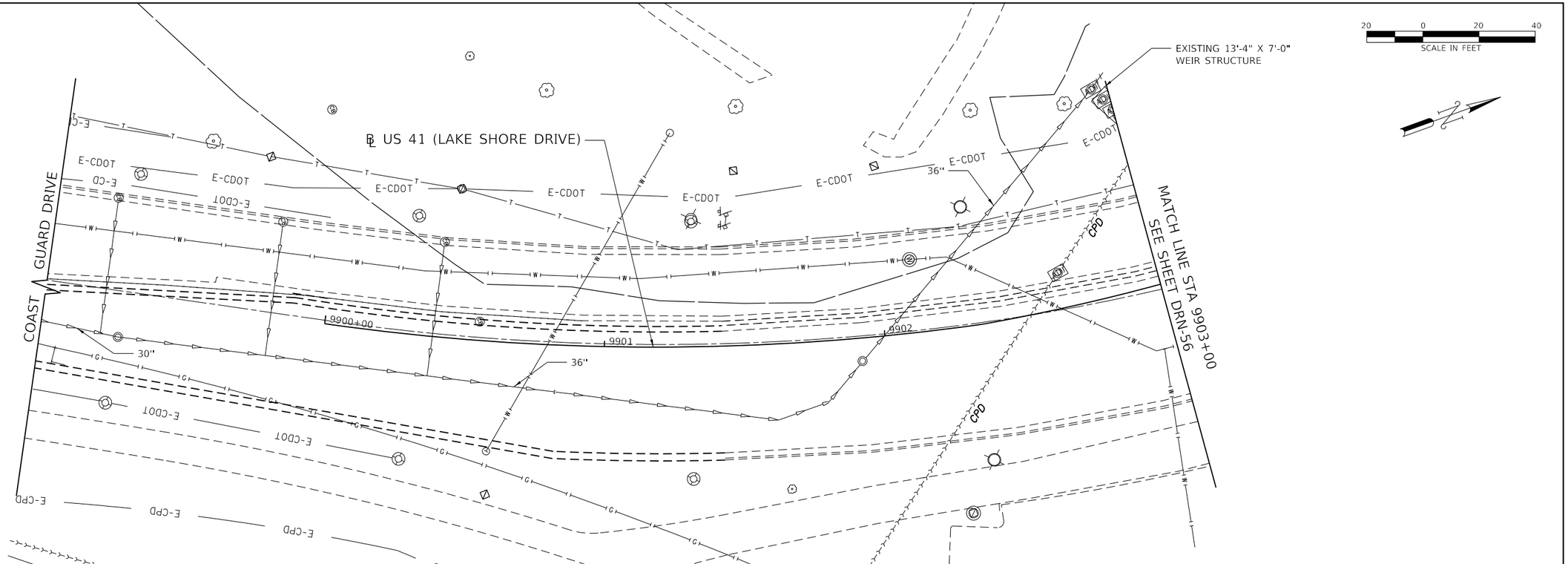


## PROPOSED CONDITIONS

159
STORM SEWERS
TYPE 2, DIP
36" - 69' @ 0.45%
TBF - 0.0 CY

162
STORM SEWERS
TYPE 2, DIP
36" - 55' @ 0.40%
TBF - 0.0 CY

160
STORM SEWERS
TYPE 2, DIP
36" - 32' @ 0.41%
TBF - 0.0 CY

163
STORM SEWERS
TYPE 2, DIP
36" - 3' @ 1.00%
TBF - 0.0 CY

161
STORM SEWERS
TYPE 2, DIP
36" - 43' @ 0.70%
TBF - 57.0 CY

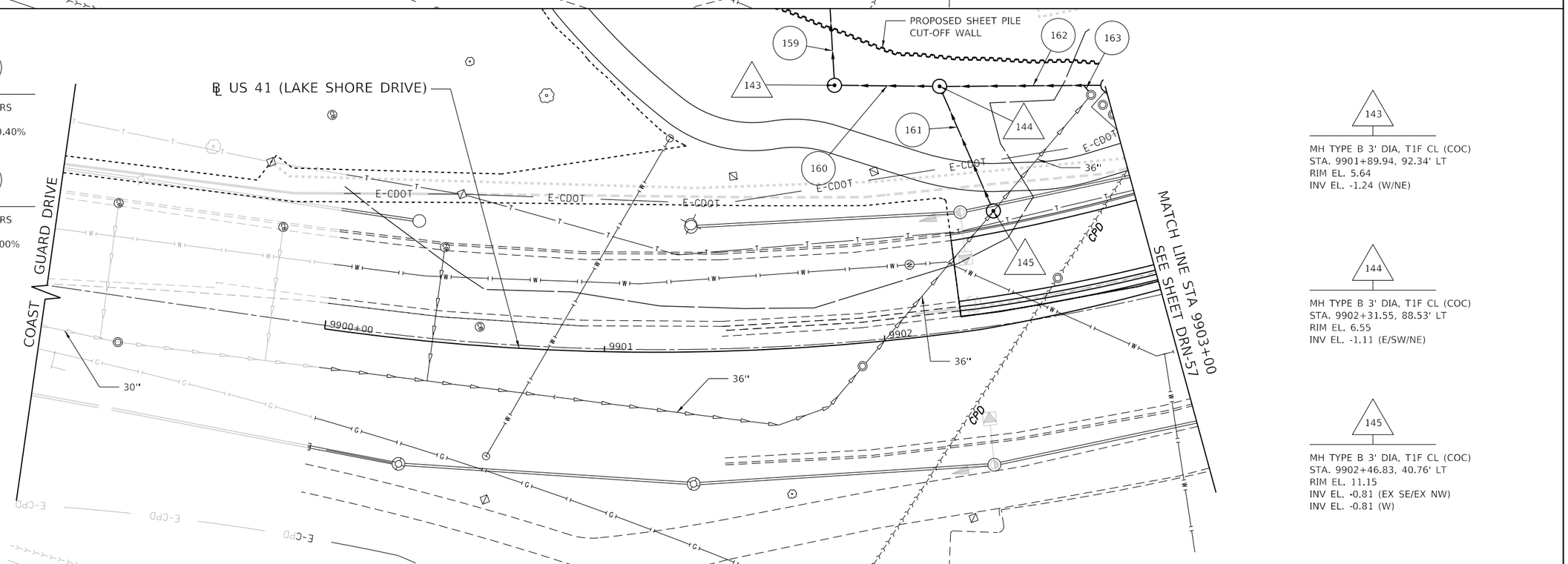


143
MH TYPE B 3' DIA, T1F CL (COC)
STA. 9901+89.94, 92.34' LT
RIM EL. 5.64
INV EL. -1.24 (W/NE)

144
MH TYPE B 3' DIA, T1F CL (COC)
STA. 9902+31.55, 88.53' LT
RIM EL. 6.55
INV EL. -1.11 (E/SW/NE)

145
MH TYPE B 3' DIA, T1F CL (COC)
STA. 9902+46.83, 40.76' LT
RIM EL. 11.15
INV EL. -0.81 (EX SE/EX NW)
INV EL. -0.81 (W)

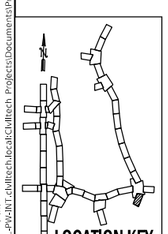

LOCATION KEY

PLOT DATE: 5/17/2021
PLOT SCALE: 40.0000 ' / in.
FILE NAME: pw:\\CIVIL-PW-INT.civiltech.local:Civiltech Projects\Documents\Projects\3153\CAD\Sheets\D&U\20-plnpln\sht-du-043.dgn

| | | | | | |
|---|---|---|---|---|---|
| DESIGN: | MSA | | | $REV3 | |
| DRAWN: | MSA | | | $REV2 | |
| CHECKED: | TKL | | | $REV1 | |
| APPROVED: | | NO. | BY | DATE | DESCRIPTION |
| DATE: 01/22/2021 | | | | REVISIONS | |

CDOT CHICAGO DEPARTMENT OF TRANSPORTATION

C*NECT

DRAINAGE PLAN
EXISTING & PROPOSED CONDITIONS
S. LAKE SHORE DR.

JACKSON PARK MOBILITY IMPROVEMENTS

STA. 9900+00 TO STA. 9903+00

| | | |
|---|---|---|
| CONTRACT NO. - | TOTAL SHEETS 1434 | SHEET NO. 485 |
| PROJECT NO. B-7-203 | DRAWING NO. DRN-55 | |
| SCALE: 1"=20' | | |

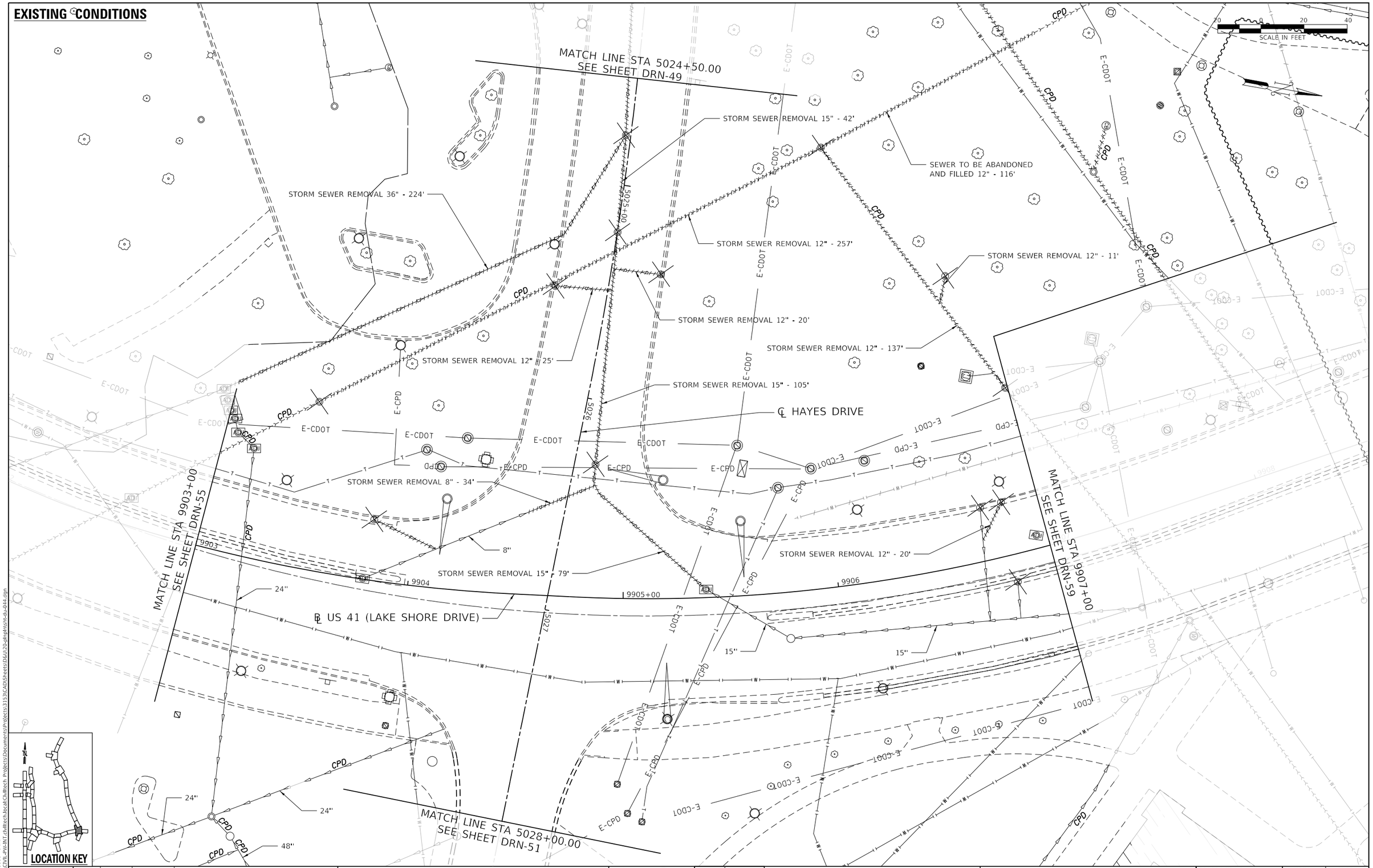


| | | | | |
|---|---|---|---|---|
| DESIGN: MSA | | | | |
| DRAWN: MSA | | | | |
| CHECKED: TKL | | | | |
| APPROVED: | NO. | BY | DATE | DESCRIPTION |
| DATE: 01/22/2021 | REVISIONS | | | |

CDOT CHICAGO DEPARTMENT OF TRANSPORTATION

C*NECT

DRAINAGE PLAN
EXISTING CONDITIONS
S. LAKE SHORE DR.

JACKSON PARK MOBILITY IMPROVEMENTS

STA. 9903+00 TO STA. 9907+00

| | | |
|---|---|---|
| CONTRACT NO. - | TOTAL SHEETS 1434 | SHEET NO. 486 |
| PROJECT NO. B-7-203 | DRAWING NO. DRN-56 | |
| SCALE: 1"=20' | | |

PLOT DATE: 5/17/2021
PLOT SCALE: 40.0000 ' / in.
FILE NAME: pw:\\CIVIL-PW-INT.civiltech.local:Civiltech Projects\Documents\Projects\3153\CAD\Sheets\D&U\20-plnpln\sht-du-044.dgn

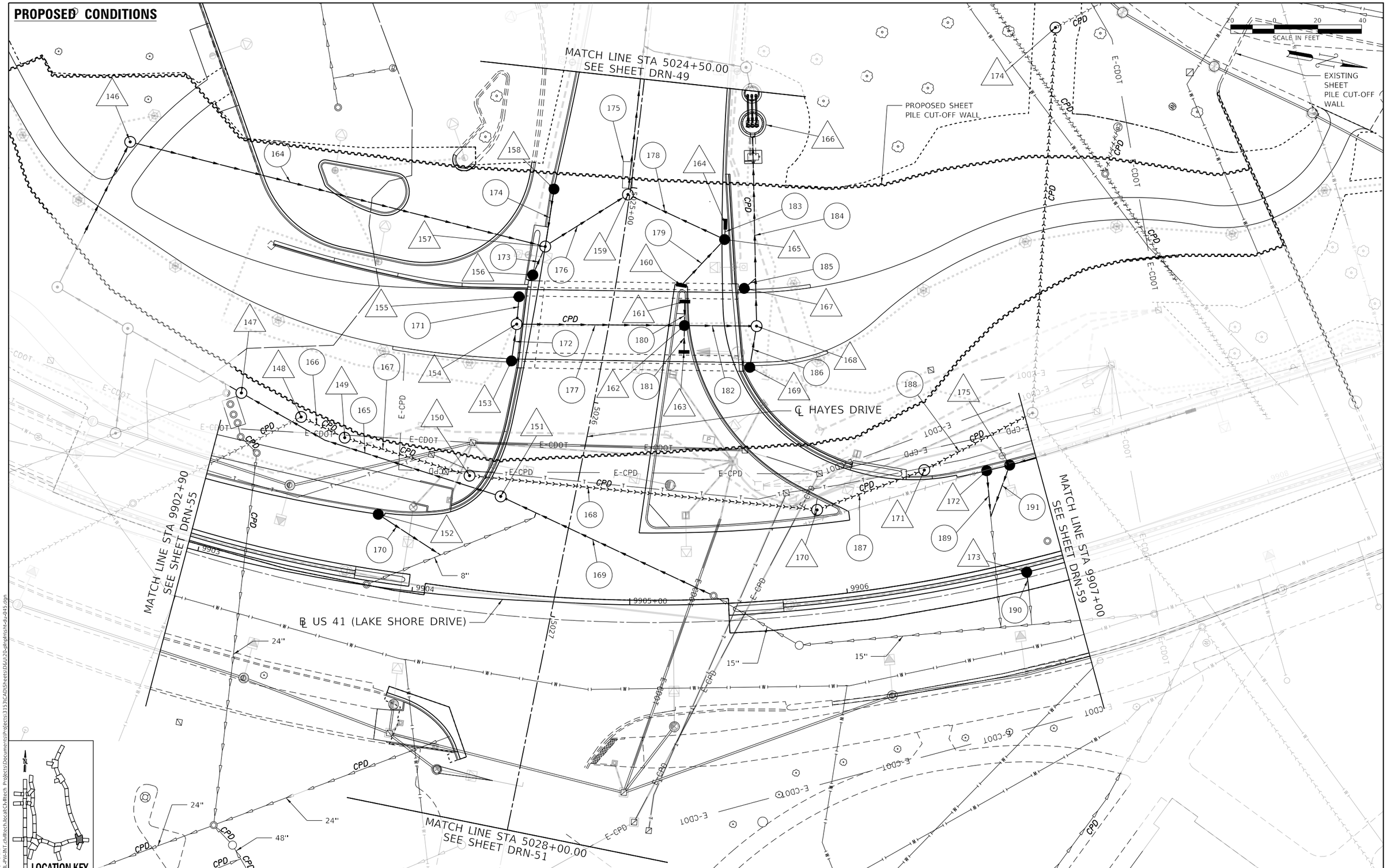


| | | | | |
|---|---|---|---|---|
| DESIGN: MSA | | | | |
| DRAWN: MSA | | | | |
| CHECKED: TKL | | | | |
| APPROVED: | NO. | BY | DATE | DESCRIPTION |
| DATE: 03/26/2021 | REVISIONS | | | |

CDOT CHICAGO DEPARTMENT OF TRANSPORTATION

C*NECT

DRAINAGE PLAN
PROPOSED CONDITIONS
S. LAKE SHORE DR.

JACKSON PARK MOBILITY IMPROVEMENTS

STA. 9903+00 TO STA. 9907+00

CONTRACT NO. -
PROJECT NO. B-7-203
SCALE: 1"=20'

| TOTAL SHEETS | SHEET NO. |
|---|---|
| 1434 | 487 |

DRAWING NO. DRN-57

PLOT DATE: 5/17/2021
PLOT SCALE: 40.0000 ' / in.
FILE NAME: pw:\\CIVIL-PW-INT.civiltech.local:Civiltech Projects\Documents\Projects\3153\CAD\Sheets\D&U\20-plnpln\sht-du-045.dgn

146

MH TYPE B 3' DIA, T1F CL (COC)
STA. 5025+13.03, 230.20' RT
RIM EL. 5.05
INV EL. -1.55 (N/E)

147

MH TYPE B 3' DIA, T1F CL (COC)
STA. 9903+01.00, 75.10' LT
RIM EL. 8.32
INV EL. 1.81 (NE)
INV EL. -0.89 (SW)

148

SAN MH TYPE A 4' DIA, T1F CL (COC)
STA. 9903+33.58, 70.68' LT
RIM EL. 9.24
INV EL. 0.26 (N)
INV EL. TBD (EX SE)

149

SAN MH TYPE A 4' DIA, T1F CL (COC)
STA. 9903+57.24, 65.18' LT
RIM EL. 9.84
INV EL. 0.19 (N/S)

150

SAN MH TYPE A 4' DIA, T1F CL (COC)
STA. 9904+21.68, 55.45' LT
RIM EL. 9.97
INV EL. -0.03 (N/S)

151

MH TYPE A 4' DIA, T1F CL (COC)
STA. 9904+37.76, 47.05' LT
RIM EL. 9.95
INV EL. 2.21 (NE/S)

152

CB TYPE A 4' DIA, T24F&G
STA. 9903+79.57, 33.00' LT
RIM EL. 10.71
INV EL. 6.42 (NE)

153

CB TYPE A 4' DIA, T1F OL (COC)
STA. 5025+88.62, 40.80' RT
RIM EL. -5.00
INV EL. -8.42 (W)

154

MH TYPE A 4' DIA, T1F CL (COC)
STA. 5025+71.18, 41.58' RT
RIM EL. -5.79
INV EL. -9.52 (N)
INV EL. -8.49 (E/W)

155

CB TYPE A 4' DIA, T1F OL (COC)
STA. 5025+58.29, 42.74' RT
RIM EL. -5.82
INV EL. -8.42 (E)

156

CB TYPE A 4' DIA, T1F OL (COC)
STA. 5025+47.09, 38.24' RT
RIM EL. 8.00
INV EL. 3.50 (W)

157

MH TYPE B 3' DIA, T1F CL (COC)
STA. 5025+33.02, 34.75' RT
RIM EL. 7.79
INV EL. -1.78 (S/NW)
INV EL. 3.45 (E)
INV EL. 3.04 (W)

158

CB TYPE A 4' DIA, T1F OL (COC)
STA. 5025+05.79, 34.75' RT
RIM EL. 7.67
INV EL. 3.17 (E)

159

MH TYPE B 3' DIA, T1F CL (COC)
STA. 5025+03.44, 0.85' RT
RIM EL. 8.30
INV EL. 3.08 (NE)
INV EL. -1.83 (SE/W)

160

INLET TYPE A T1F OL (COC)
STA. 5025+40.54, 29.65' LT
RIM EL. 7.93
INV EL. 3.44 (NW)

161

INLET TYPE A T1F OL (COC)
STA. 719+75.66, 11.54' LT
RIM EL. -6.60
INV EL. -9.80 (E)

162

CB TYPE A 4' DIA, T1F OL (COC)
STA. 719+75.66, 0.54' LT
RIM EL. -6.43
INV EL. -9.85 (S/E/W)
INV EL. -9.87 (N)

163

INLET TYPE A T1F OL (COC)
STA. 719+75.66, 11.54' RT
RIM EL. -6.60
INV EL. -9.80 (W)

164

INLET TYPE A T1F OL (COC)
STA. 5025+10.43, 45.30' LT
RIM EL. 7.48
INV EL. 3.32 (E)

165

CB TYPE A 4' DIA, T1F OL (COC)
STA. 5025+17.22, 45.96' LT
RIM EL. 7.51
INV EL. 3.30 (SW/SE)
INV EL. 3.31 (W)

166

PUMP STATION
STA. 5024+64.32, 51.51' LT
RIM EL. 10.00
INV EL. -10.14 (NE)
INV EL. -0.24 (SW)

167

CB TYPE A 4' DIA, T1F OL (COC)
STA. 5025+37.33, 58.3' LT
RIM EL. -5.22
INV EL. -9.22 (NW)

168

MH TYPE A 6' DIA, T1F CL (COC)
STA. 5025+52.86' 66.78' LT
RIM EL. -5.88
INV EL. -9.50 (SE)
INV EL. -9.98 (S/W)

169

CB TYPE A 4' DIA, T1F OL (COC)
STA. 5025+71.26, 67.04' LT
RIM EL. -5.16
INV EL. -9.43 (NW)

170

SAN MH TYPE A 4' DIA, T1F CL (COC)
STA. 9905+90.41, 39.47' LT
RIM EL. 10.37
INV EL. -0.63 (NW/S)

171

SAN MH TYPE A 4' DIA, T1F CL (COC)
STA. 9906+45.15, 50.22' LT
RIM EL. 10.15
INV EL. -0.81 (NW/SE)

172

CB TYPE A 4' DIA, T24F&G
STA. 9906+75.05, 44.00' LT
RIM EL. 9.59
INV EL. 5.09 (NE)

173

CB TYPE A 4' DIA, T1 OL
STA. 9906+82.26, 5.50' RT
RIM EL. 10.77
INV EL. 6.27 (NE)

174

SAN MH TYPE A 4' DIA, T1F CL (COC)
STA. 9907+73.84, 229.36' LT
RIM EL. 10.36
INV EL. -1.73 (E)
INV EL. TBD (EX NW)

175

CB TYPE A 4' DIA, T24F&G
STA. 9906+86.60, 44.00' LT
RIM EL. 9.60
INV EL. 5.10 (SE/NW)

164

STORM SEWERS
TYPE 2, DIP
36" - 191' @ 0.12%
TBF - 175.0 CY

165

STORM SEWERS
TYPE 2, DIP
16" - 124' @ 0.32%
TBF - 90.0 CY

166

SANITARY SEWERS
TYPE 2, DIP
12" - 17' @ 0.39%
TBF - 0.0 CY

167

SANITARY SEWERS
TYPE 2, DIP
12" - 55' @ 0.39%
TBF - 0.0 CY

168

SANITARY SEWERS
TYPE 2, DIP
12" - 155' @ 0.39%
TBF - 193.0 CY

169

STORM SEWERS
TYPE 2, DIP
16" - 104' @ 0.31%
TBF - 94.0 CY

170

STORM SEWERS
TYPE 2, ESVCP
8" - 32' @ 0.54%
TBF - 6.0 CY

171

STORM SEWERS
TYPE 1, ESVCP
8" - 12' @ 0.58%
TBF - 1.0 CY

172

STORM SEWERS
TYPE 1, ESVCP
8" - 12' @ 0.58%
TBF - 1.0 CY

173

STORM SEWERS
TYPE 2, ESVCP
8" - 10' @ 0.54%
TBF - 2.0 CY

174

STORM SEWERS
TYPE 2, DIP
8" - 22' @ 0.60%
TBF - 5.0 CY

175

STORM SEWERS
STEEL CASING
48" - 16' @ 0.11%

176

STORM SEWERS
TYPE 2, RCP
36" - 40' @ 0.12%
TBF - 55.0 CY

177

STORM SEWERS
TYPE 1, DIP
18" - 76' @ 0.44%
TBF - 4.0 CY

178

STORM SEWERS
TYPE 2, ESVCP
12" - 44' @ 0.50%
TBF - 9.0 CY

179

STORM SEWERS
TYPE 2, ESVCP
8" - 26' @ 0.54%
TBF - 5.0 CY

180

STORM SEWERS
TYPE 1, DIP
8" - 8' @ 0.54%
TBF - 2.0 CY

181

STORM SEWERS
TYPE 1, DIP
8" - 9' @ 0.54%
TBF - 2.0 CY

182

STORM SEWERS
TYPE 1, DIP
18" - 25' @ 0.44%
TBF - 2.0 CY

183

STORM SEWERS
TYPE 2, DIP
8" - 2' @ 0.54%
TBF - 1.0 CY

184

STORM SEWERS
TYPE 3, DIP
24" - 84' @ 0.19%
TBF - 147.0 CY

185

STORM SEWERS
TYPE 2, ESVCP
8" - 5' @ 0.55%
TBF - 5.0 CY

186

STORM SEWERS
TYPE 2, ESVCP
8" - 14' @ 0.54%
TBF - 2.0 CY

187

SANITARY SEWERS
TYPE 2, DIP
12" - 47' @ 0.39%
TBF - 63.0 CY

188

SANITARY SEWERS
TYPE 2, DIP
12" - 51' @ 0.39%
TBF - 0.0 CY

189

STORM SEWERS
TYPE 2, ESVCP
8" - 19' @ 0.54%
TBF - 4.0 CY

190

STORM SEWERS
TYPE 2, ESVCP
8" - 7' @ 0.54%
TBF - 2.0 CY

191

STORM SEWERS
TYPE 2, ESVCP
8" - 23' @ 0.54%
TBF - 5.0 CY

PLOT DATE: 5/17/2021
PLOT SCALE: 40.0000 ' / in.
FILE NAME: pw:\\CIVIL-PW-INT.dsiTech.local:CivilTech Projects\Documents\Projects\3153\CADDSheets\DGU20-drngNote-du-045b.dgn

| | | | | |
|---|---|---|---|---|
| DESIGN: MSA | | | | |
| DRAWN: MSA | | | | |
| CHECKED: TKL | | | | |
| APPROVED: | NO. | BY | DATE | DESCRIPTION |
| DATE: 03/26/2021 | REVISIONS | | | |

CDOT CHICAGO DEPARTMENT OF TRANSPORTATION

C*NECT

DRAINAGE PLAN
NOTES
S. LAKE SHORE DR.

JACKSON PARK MOBILITY IMPROVEMENTS

STA. 9903+00 TO STA. 9907+00

| | |
|---|---|
| CONTRACT NO. | - |
| PROJECT NO. | B-7-203 |
| SCALE: NONE | |

| TOTAL SHEETS | SHEET NO. |
|---|---|
| 1434 | 488 |

DRAWING NO.
DRN-58

## EXISTING CONDITIONS

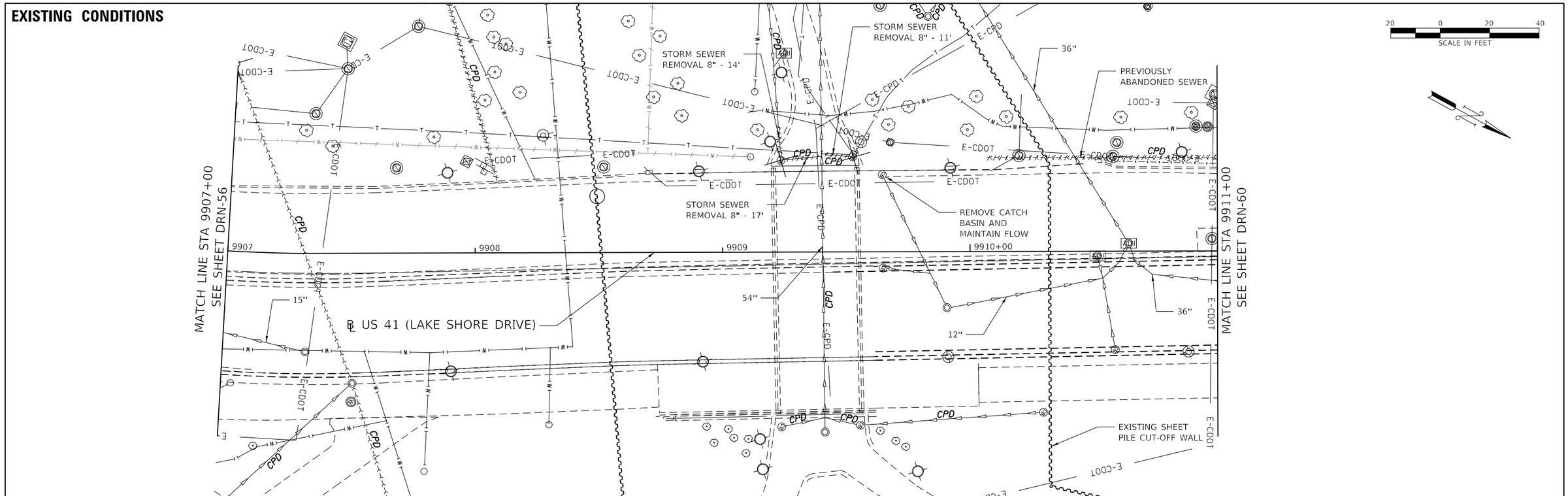


## PROPOSED CONDITIONS

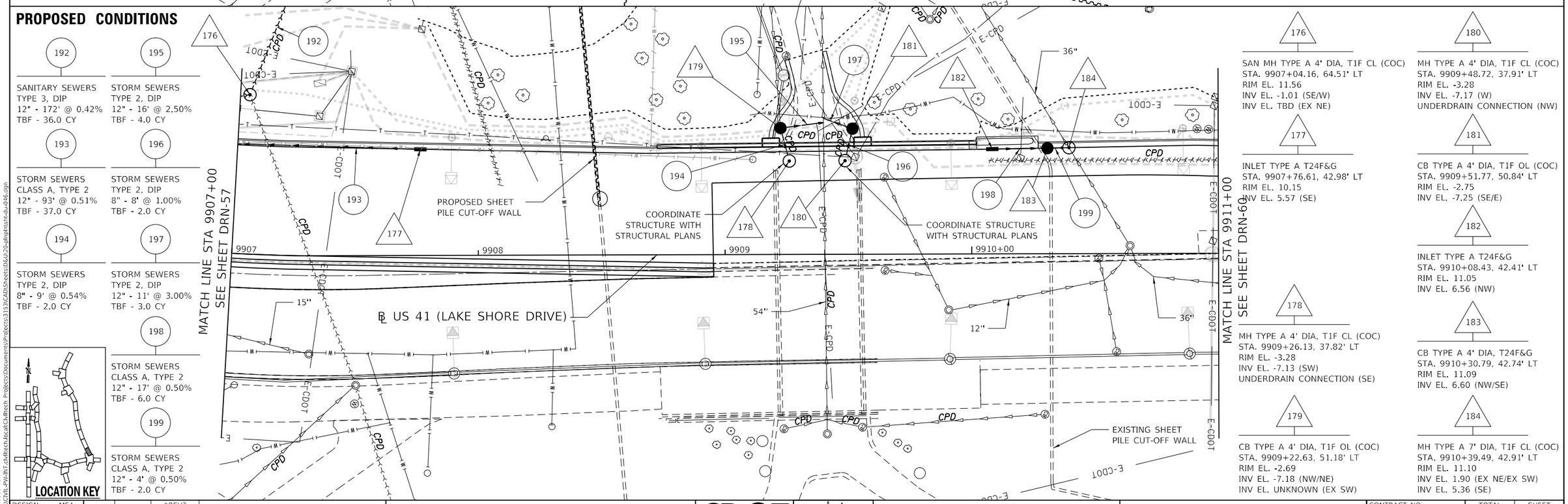


192 — SANITARY SEWERS TYPE 3, DIP 12" - 172' @ 0.42% TBF - 36.0 CY

195 — STORM SEWERS TYPE 2, DIP 12" - 16' @ 2.50% TBF - 4.0 CY

193 — STORM SEWERS CLASS A, TYPE 2 12" - 93' @ 0.51% TBF - 37.0 CY

196 — STORM SEWERS TYPE 2, DIP 8" - 8' @ 1.00% TBF - 2.0 CY

194 — STORM SEWERS TYPE 2, DIP 8" - 9' @ 0.54% TBF - 2.0 CY

197 — STORM SEWERS TYPE 2, DIP 12" - 11' @ 3.00% TBF - 3.0 CY

198 — STORM SEWERS CLASS A, TYPE 2 12" - 17' @ 0.50% TBF - 6.0 CY

199 — STORM SEWERS CLASS A, TYPE 2 12" - 4' @ 0.50% TBF - 2.0 CY

176 — SAN MH TYPE A 4' DIA, T1F CL (COC) STA. 9907+04.16, 64.51' LT RIM EL. 11.56 INV EL. -1.01 (SE/W) INV EL. TBD (EX NE)

177 — INLET TYPE A T24F&G STA. 9907+76.61, 42.98' LT RIM EL. 10.15 INV EL. 5.57 (SE)

178 — MH TYPE A 4' DIA, T1F CL (COC) STA. 9909+26.13, 37.82' LT RIM EL. -3.28 INV EL. -7.13 (SW) UNDERDRAIN CONNECTION (SE)

179 — CB TYPE A 4' DIA, T1F OL (COC) STA. 9909+22.63, 51.18' LT RIM EL. -2.69 INV EL. -7.18 (NW/NE) INV EL. UNKNOWN (EX SW)

180 — MH TYPE A 4' DIA, T1F CL (COC) STA. 9909+48.72, 37.91' LT RIM EL. -3.28 INV EL. -7.17 (W) UNDERDRAIN CONNECTION (NW)

181 — CB TYPE A 4' DIA, T1F OL (COC) STA. 9909+51.77, 50.84' LT RIM EL. -2.75 INV EL. -7.25 (SE/E)

182 — INLET TYPE A T24F&G STA. 9910+08.43, 42.41' LT RIM EL. 11.05 INV EL. 6.56 (NW)

183 — CB TYPE A 4' DIA, T24F&G STA. 9910+30.79, 42.74' LT RIM EL. 11.09 INV EL. 6.60 (NW/SE)

184 — MH TYPE A 7' DIA, T1F CL (COC) STA. 9910+39.49, 42.91' LT RIM EL. 11.10 INV EL. 1.90 (EX NE/EX SW) INV EL. 5.36 (SE)




| | | | | |
|---|---|---|---|---|
| DESIGN: MSA | | | $REV3 | |
| DRAWN: MSA | | | $REV2 | |
| CHECKED: TKL | | | $REV1 | |
| APPROVED: | NO. | BY | DATE | DESCRIPTION |
| DATE: 01/22/2021 | REVISIONS | | | |

CDOT CHICAGO DEPARTMENT OF TRANSPORTATION

C*NECT

DRAINAGE PLAN
EXISTING & PROPOSED CONDITIONS
S. LAKE SHORE DR.

JACKSON PARK MOBILITY IMPROVEMENTS

STA. 9907+00 TO STA. 9911+00

CONTRACT NO. -
PROJECT NO. B-7-203
SCALE: 1"=20'

| TOTAL SHEETS | SHEET NO. |
|---|---|
| 1434 | 489 |

DRAWING NO. DRN-59

PLOT DATE: 5/17/2021
PLOT SCALE: 40.0000 ' / in.
FILE NAME: pw:\\CIVIL-PW-INT.civiltech.local:Civiltech Projects\Documents\Projects\3153\CAD\Sheets\D&U\20-plnpln\sht-du-046.dgn

## EXISTING CONDITIONS

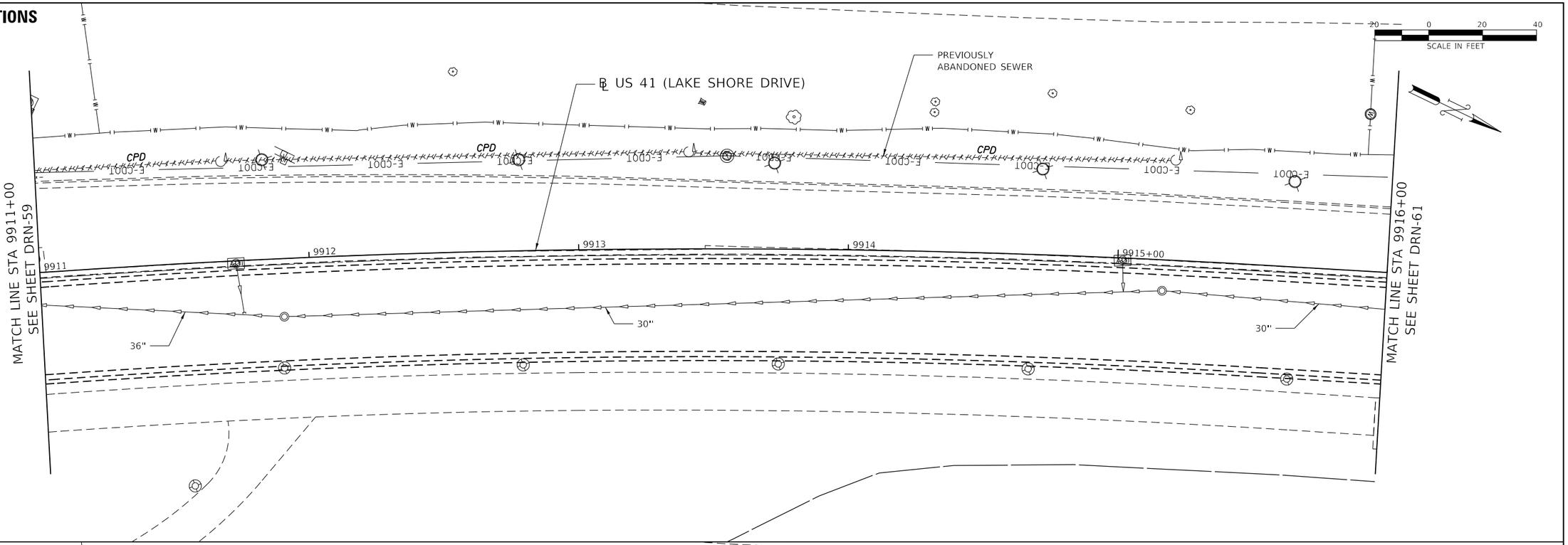


## PROPOSED CONDITIONS

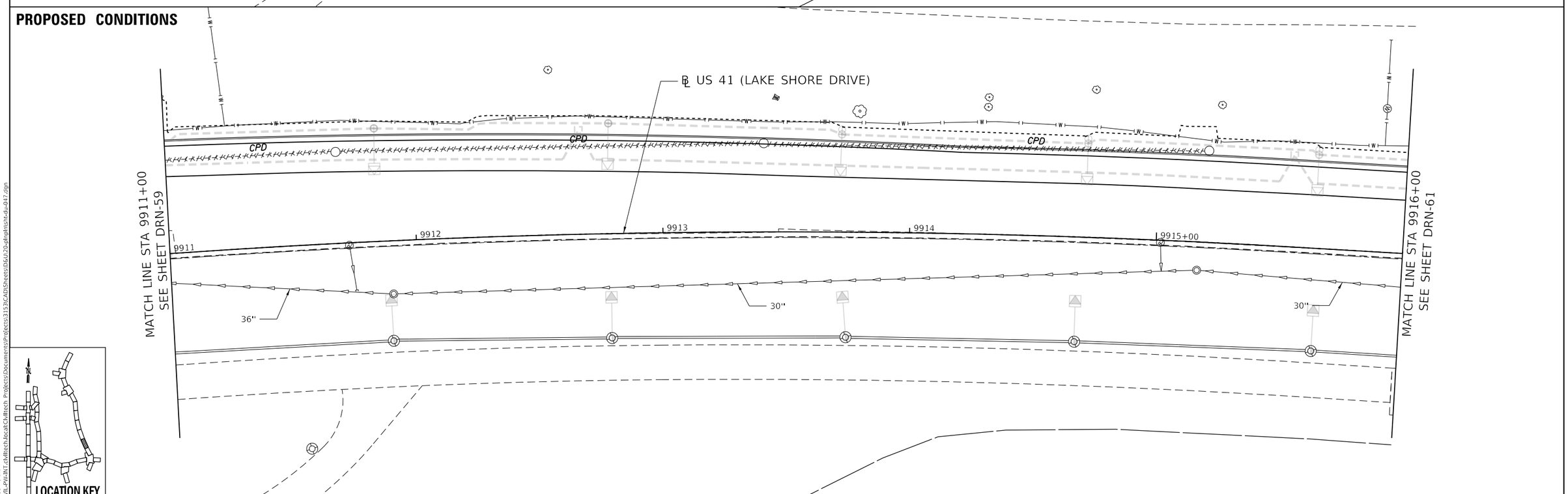




LOCATION KEY

| | | | | | |
|---|---|---|---|---|---|
| DESIGN: | MSA | | | SREV3 | |
| DRAWN: | MSA | | | SREV2 | |
| CHECKED: | TKL | | | SREV1 | |
| APPROVED: | | NO. | BY | DATE | DESCRIPTION |
| DATE: 01/22/2021 | | REVISIONS | | | |

CDOT CHICAGO DEPARTMENT OF TRANSPORTATION

C*NECT

DRAINAGE PLAN
EXISTING & PROPOSED CONDITIONS
S. LAKE SHORE DR.

JACKSON PARK MOBILITY IMPROVEMENTS

STA. 9911+00 TO STA. 9916+00

CONTRACT NO. -
PROJECT NO. B-7-203
SCALE: 1"=20'

| TOTAL SHEETS | SHEET NO. |
|---|---|
| 1434 | 490 |

DRAWING NO. DRN-60

PLOT DATE: 5/17/2021
PLOT SCALE: 40.0000 ' / in.
FILE NAME: pw:\\CIVIL-PW-INT.civiltech.local:Civiltech Projects\Documents\Projects\3153\CAD\Sheets\D&U\20-plnpln\sht-du-047.dgn

## EXISTING CONDITIONS

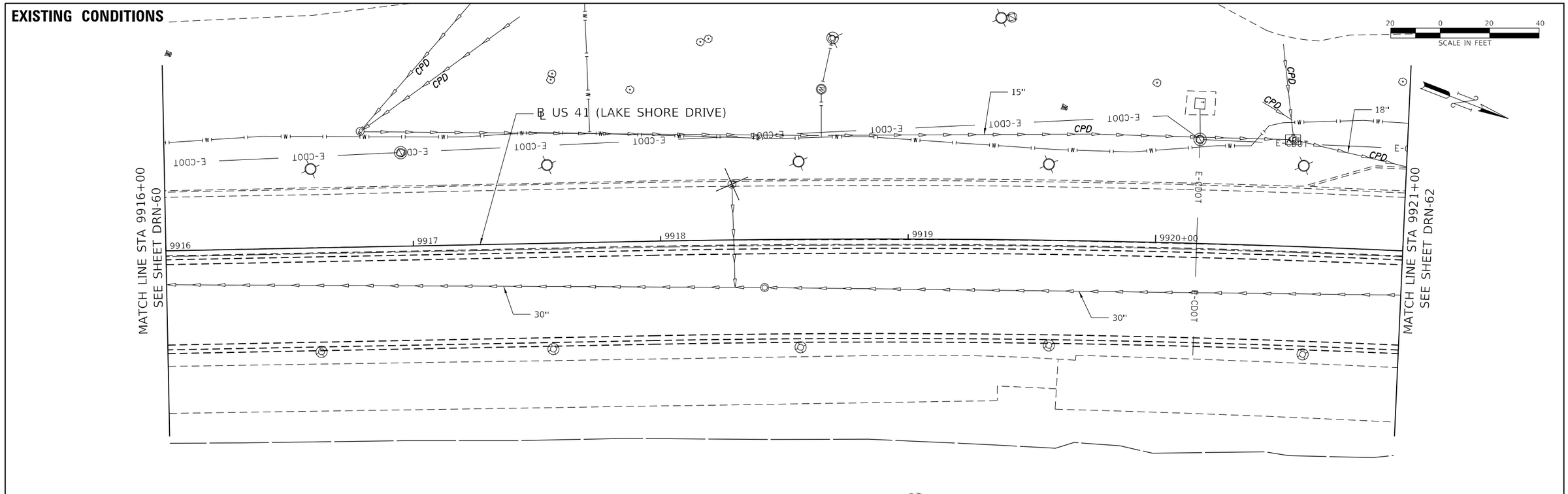


## PROPOSED CONDITIONS

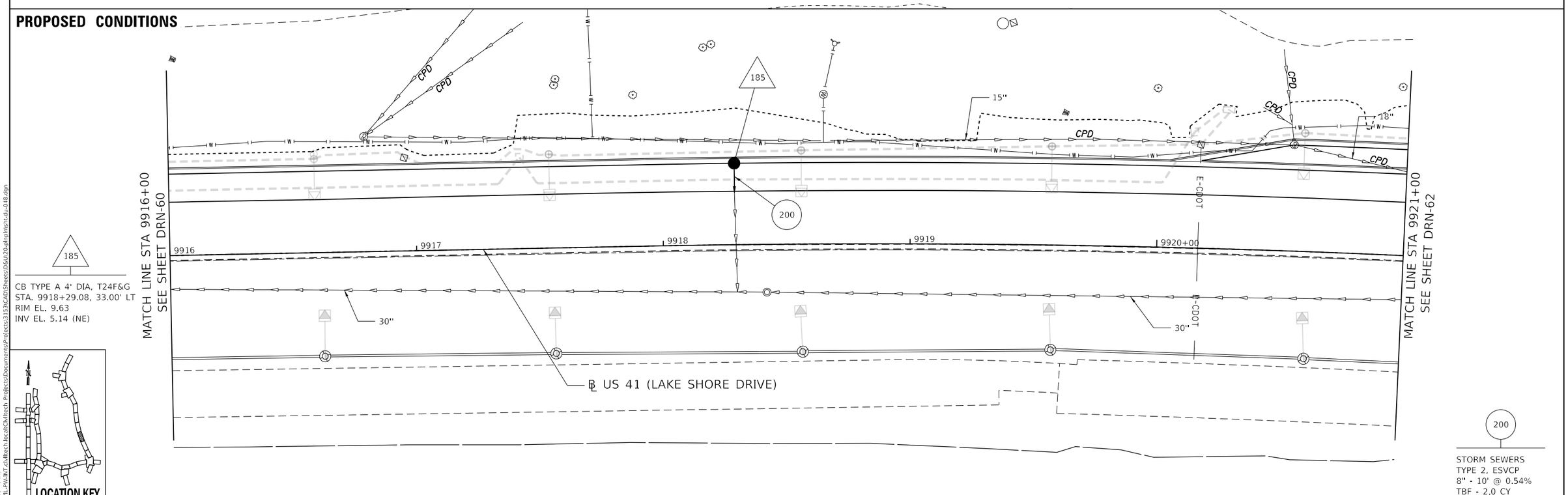


185

CB TYPE A 4' DIA, T24F&G
STA. 9918+29.08, 33.00' LT
RIM EL. 9.63
INV EL. 5.14 (NE)

200

STORM SEWERS
TYPE 2, ESVCP
8" - 10' @ 0.54%
TBF - 2.0 CY




LOCATION KEY

PLOT DATE: 5/17/2021
PLOT SCALE: 40.0000 ' / in.
FILE NAME: pw:\\CIVIL-PW-INT.civiltech.local:Civiltech Projects\Documents\Projects\3153\CAD\Sheets\D&U\20-plnpln\sht-du-048.dgn

| | | | | | |
|---|---|---|---|---|---|
| DESIGN: | MSA | | | $REV3 | |
| DRAWN: | MSA | | | $REV2 | |
| CHECKED: | TKL | | | $REV1 | |
| APPROVED: | | NO. | BY | DATE | DESCRIPTION |
| DATE: 01/22/2021 | | REVISIONS | | | |

CDOT CHICAGO DEPARTMENT OF TRANSPORTATION

C*NECT

DRAINAGE PLAN
EXISTING & PROPOSED CONDITIONS
S. LAKE SHORE DR.

JACKSON PARK MOBILITY IMPROVEMENTS

STA. 9916+00 TO STA. 9921+00

| | | |
|---|---|---|
| CONTRACT NO. - | TOTAL SHEETS 1434 | SHEET NO. 491 |
| PROJECT NO. B-7-203 | DRAWING NO. DRN-61 | |
| SCALE: 1"=20' | | |

## EXISTING CONDITIONS

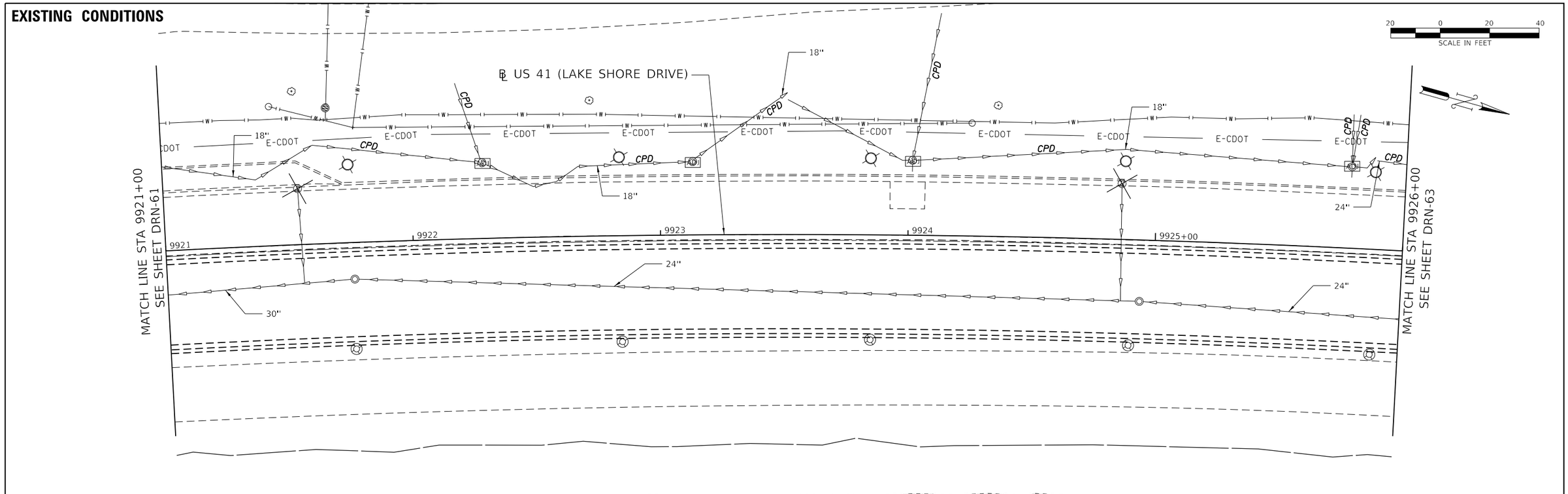


## PROPOSED CONDITIONS

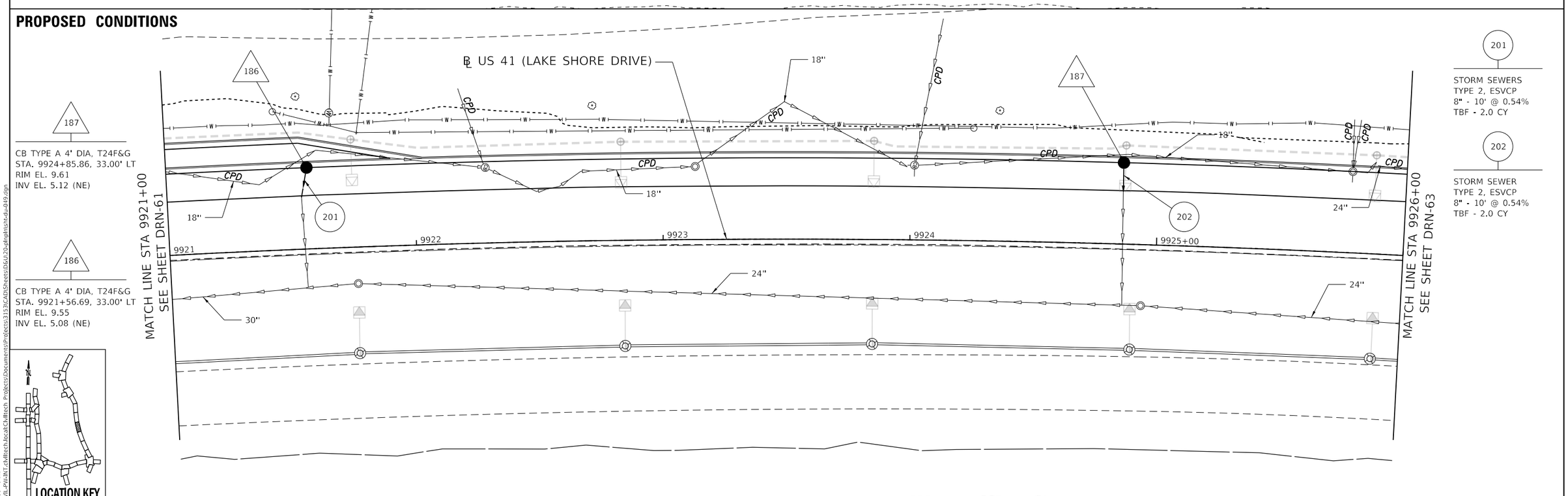


187

CB TYPE A 4' DIA, T24F&G
STA. 9924+85.86, 33.00' LT
RIM EL. 9.61
INV EL. 5.12 (NE)

186

CB TYPE A 4' DIA, T24F&G
STA. 9921+56.69, 33.00' LT
RIM EL. 9.55
INV EL. 5.08 (NE)

201

STORM SEWERS
TYPE 2, ESVCP
8" - 10' @ 0.54%
TBF - 2.0 CY

202

STORM SEWER
TYPE 2, ESVCP
8" - 10' @ 0.54%
TBF - 2.0 CY




LOCATION KEY

PLOT DATE: 5/17/2021
PLOT SCALE: 40.0000 ' / in.
FILE NAME: pw:\\CIVIL-PW-INT.civiltech.local:Civiltech Projects\Documents\Projects\3153\CAD\Sheets\D&U\20-plnpln\sht-du-049.dgn

| | | | | |
|---|---|---|---|---|
| DESIGN: MSA | | | SREV3 | |
| DRAWN: MSA | | | SREV2 | |
| CHECKED: TKL | | | SREV1 | |
| APPROVED: | NO. | BY | DATE | DESCRIPTION |
| DATE: 01/22/2021 | REVISIONS | | | |

CDOT CHICAGO DEPARTMENT OF TRANSPORTATION

C*NECT

DRAINAGE PLAN
EXISTING & PROPOSED CONDITIONS
S. LAKE SHORE DR.

JACKSON PARK MOBILITY IMPROVEMENTS

STA. 9921+00 TO STA. 9926+00

CONTRACT NO. -
PROJECT NO. B-7-203
SCALE: 1"=20'

| TOTAL SHEETS | SHEET NO. |
|---|---|
| 1434 | 492 |

DRAWING NO. DRN-62

## EXISTING CONDITIONS

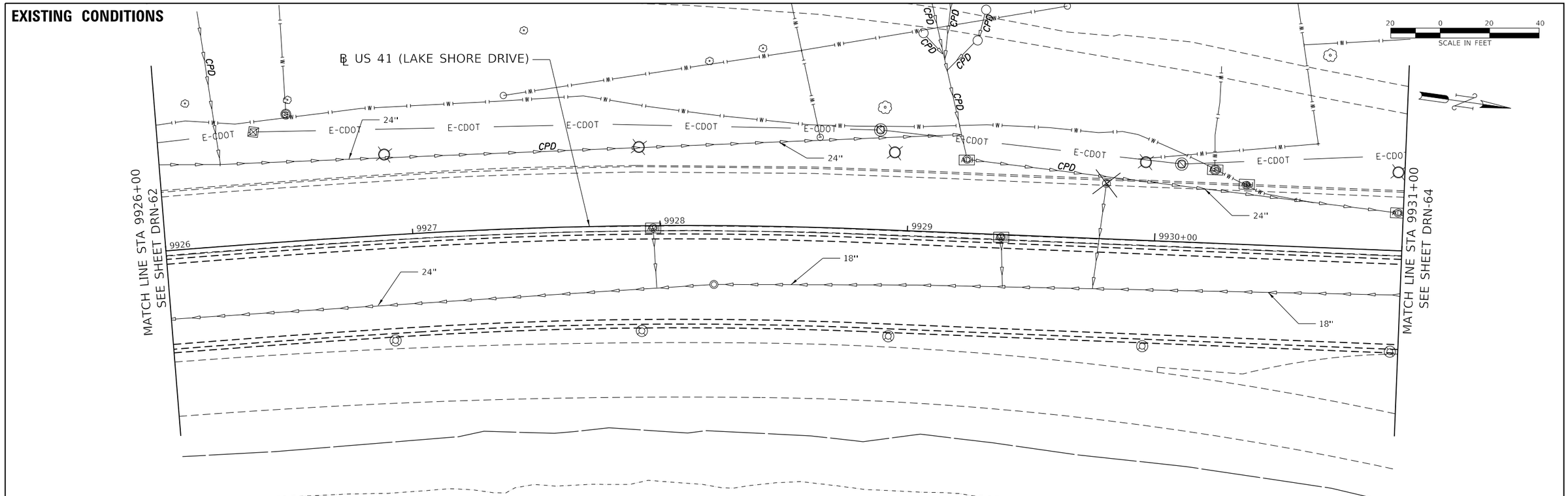


## PROPOSED CONDITIONS

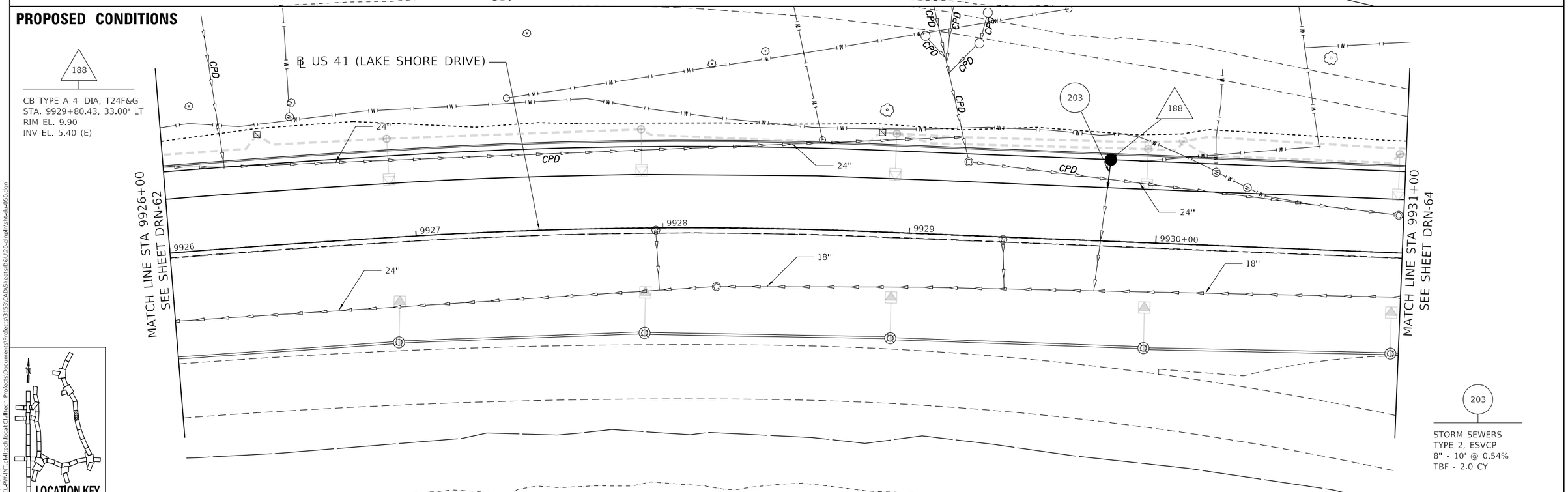


188

CB TYPE A 4' DIA, T24F&G
STA. 9929+80.43, 33.00' LT
RIM EL. 9.90
INV EL. 5.40 (E)

203

STORM SEWERS
TYPE 2, ESVCP
8" - 10' @ 0.54%
TBF - 2.0 CY




PLOT DATE: 5/17/2021
PLOT SCALE: 40.0000 ' / in.
FILE NAME: pw:\\CIVIL-PW-INT.civiltech.local:Civiltech Projects\Documents\Projects\3153\CAD\Sheets\D&U\20-plnpln\sht-du-050.dgn

| | | | | |
|---|---|---|---|---|
| DESIGN: MSA | | | SREV3 | |
| DRAWN: MSA | | | SREV2 | |
| CHECKED: TKL | | | SREV1 | |
| APPROVED: | NO. | BY | DATE | DESCRIPTION |
| DATE: 01/22/2021 | REVISIONS | | | |

CDOT CHICAGO DEPARTMENT OF TRANSPORTATION

C*NECT

DRAINAGE PLAN
EXISTING & PROPOSED CONDITIONS
S. LAKE SHORE DR.

JACKSON PARK MOBILITY IMPROVEMENTS

STA. 9926+00 TO STA. 9931+00

| | | |
|---|---|---|
| CONTRACT NO. - | TOTAL SHEETS 1434 | SHEET NO. 493 |
| PROJECT NO. B-7-203 | DRAWING NO. DRN-63 | |
| SCALE: 1"=20' | | |

## EXISTING CONDITIONS

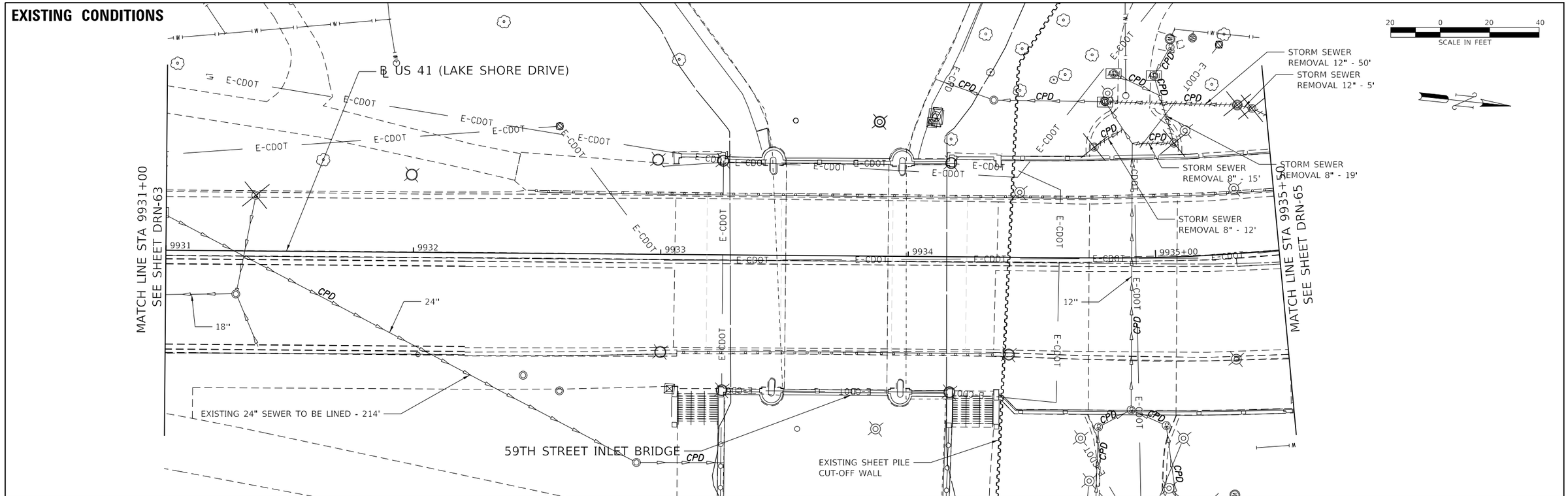


## PROPOSED CONDITIONS

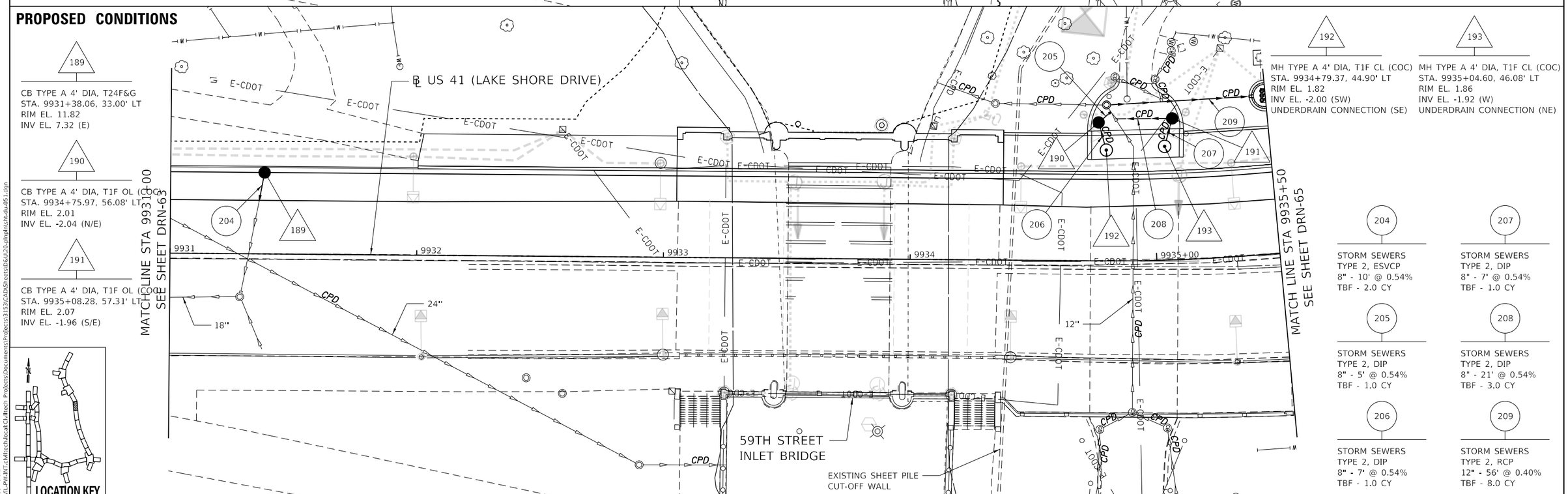


189
CB TYPE A 4' DIA, T24F&G
STA. 9931+38.06, 33.00' LT
RIM EL. 11.82
INV EL. 7.32 (E)

190
CB TYPE A 4' DIA, T1F OL (COC)
STA. 9934+75.97, 56.08' LT
RIM EL. 2.01
INV EL. -2.04 (N/E)

191
CB TYPE A 4' DIA, T1F OL (COC)
STA. 9935+08.28, 57.31' LT
RIM EL. 2.07
INV EL. -1.96 (S/E)

192
MH TYPE A 4' DIA, T1F CL (COC)
STA. 9934+79.37, 44.90' LT
RIM EL. 1.82
INV EL. -2.00 (SW)
UNDERDRAIN CONNECTION (SE)

193
MH TYPE A 4' DIA, T1F CL (COC)
STA. 9935+04.60, 46.08' LT
RIM EL. 1.86
INV EL. -1.92 (W)
UNDERDRAIN CONNECTION (NE)

204
STORM SEWERS
TYPE 2, ESVCP
8" - 10' @ 0.54%
TBF - 2.0 CY

207
STORM SEWERS
TYPE 2, DIP
8" - 7' @ 0.54%
TBF - 1.0 CY

205
STORM SEWERS
TYPE 2, DIP
8" - 5' @ 0.54%
TBF - 1.0 CY

208
STORM SEWERS
TYPE 2, DIP
8" - 21' @ 0.54%
TBF - 3.0 CY

206
STORM SEWERS
TYPE 2, DIP
8" - 7' @ 0.54%
TBF - 1.0 CY

209
STORM SEWERS
TYPE 2, RCP
12" - 56' @ 0.40%
TBF - 8.0 CY


LOCATION KEY

| | | | | |
|---|---|---|---|---|
| DESIGN: MSA | | | SREV3 | |
| DRAWN: MSA | | | SREV2 | |
| CHECKED: TKL | | | SREV1 | |
| APPROVED: | NO. | BY | DATE | DESCRIPTION |
| DATE: 01/22/2021 | REVISIONS | | | |

CDOT CHICAGO DEPARTMENT OF TRANSPORTATION

C*NECT

DRAINAGE PLAN
EXISTING & PROPOSED CONDITIONS
S. LAKE SHORE DR.

JACKSON PARK MOBILITY IMPROVEMENTS
STA. 9931+00 TO STA. 9935+50

CONTRACT NO. -
PROJECT NO. B-7-203
SCALE: 1"=20'

| TOTAL SHEETS | SHEET NO. |
|---|---|
| 1434 | 494 |

DRAWING NO. DRN-64

PLOT DATE: 5/17/2021
PLOT SCALE: 40.0000 ' / in.
FILE NAME: pw:\\CIVIL-PW-INT.civiltech.local:Civiltech Projects\Documents\Projects\3153\CAD\Sheets\D&U\20-plnpln\sht-du-051.dgn

## EXISTING CONDITIONS

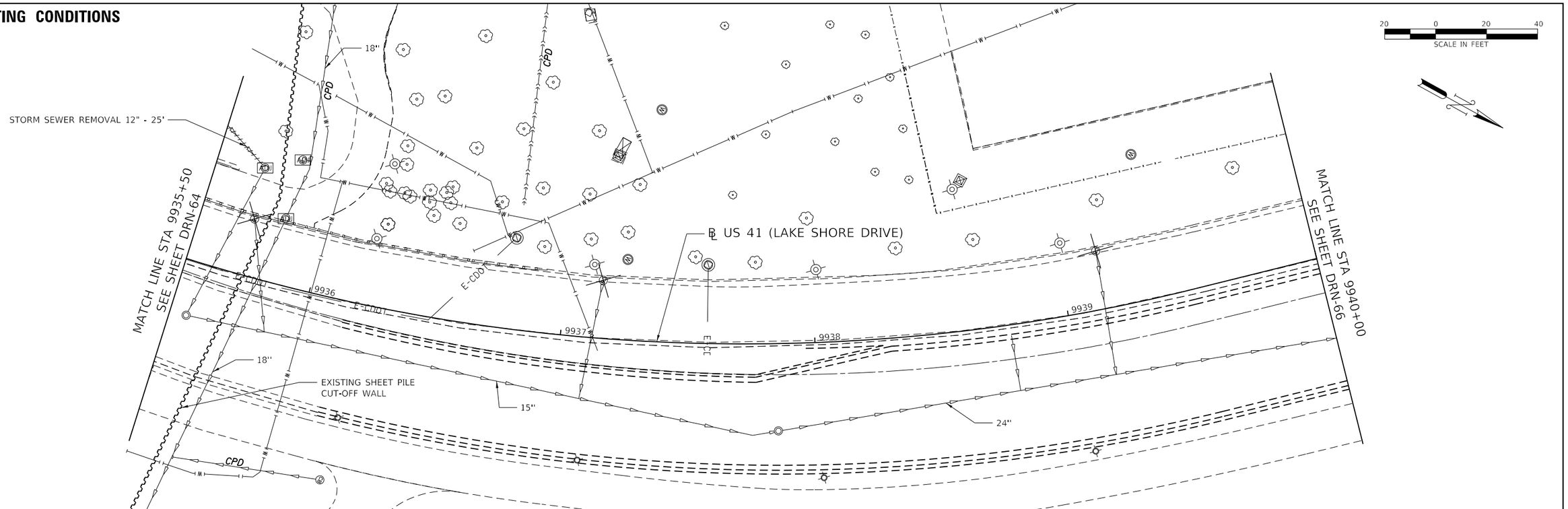


## PROPOSED CONDITIONS

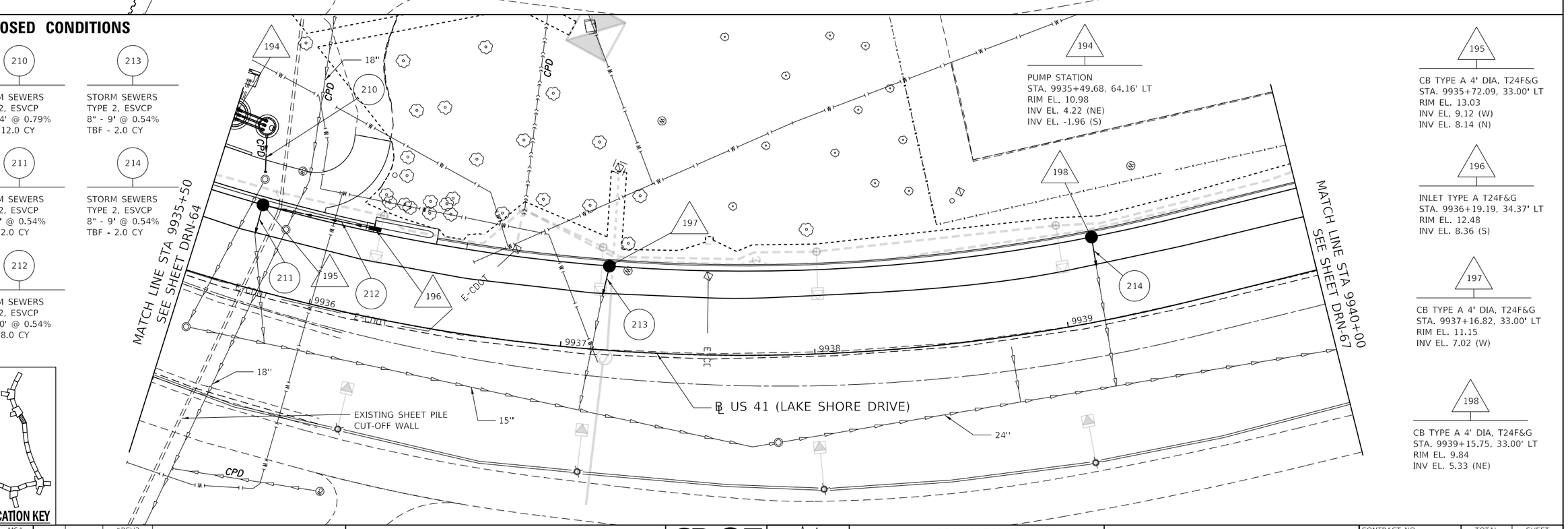





| | | | | | |
|---|---|---|---|---|---|
| DESIGN: | MSA | | | SREV3 | |
| DRAWN: | MSA | | | SREV2 | |
| CHECKED: | TKL | | | SREV1 | |
| APPROVED: | | NO. | BY | DATE | DESCRIPTION |
| DATE: 01/22/2021 | | | | REVISIONS | |

CDOT CHICAGO DEPARTMENT OF TRANSPORTATION

C*NECT

DRAINAGE PLAN
EXISTING & PROPOSED CONDITIONS
S. LAKE SHORE DR.

JACKSON PARK MOBILITY IMPROVEMENTS

STA. 9935+50 TO STA. 9940+00

| | | |
|---|---|---|
| CONTRACT NO. - | TOTAL SHEETS 1434 | SHEET NO. 495 |
| PROJECT NO. B-7-203 | DRAWING NO. DRN-65 | |
| SCALE: 1"=20' | | |

PLOT DATE: 5/17/2021
PLOT SCALE: 40.0000 ' / in.
FILE NAME: pw:\\CIVIL-PW-INT.civiltech.local:Civiltech Projects\Documents\Projects\3153\CAD\Sheets\D&U\20-plnpln\sht-du-052.dgn

## EXISTING CONDITIONS

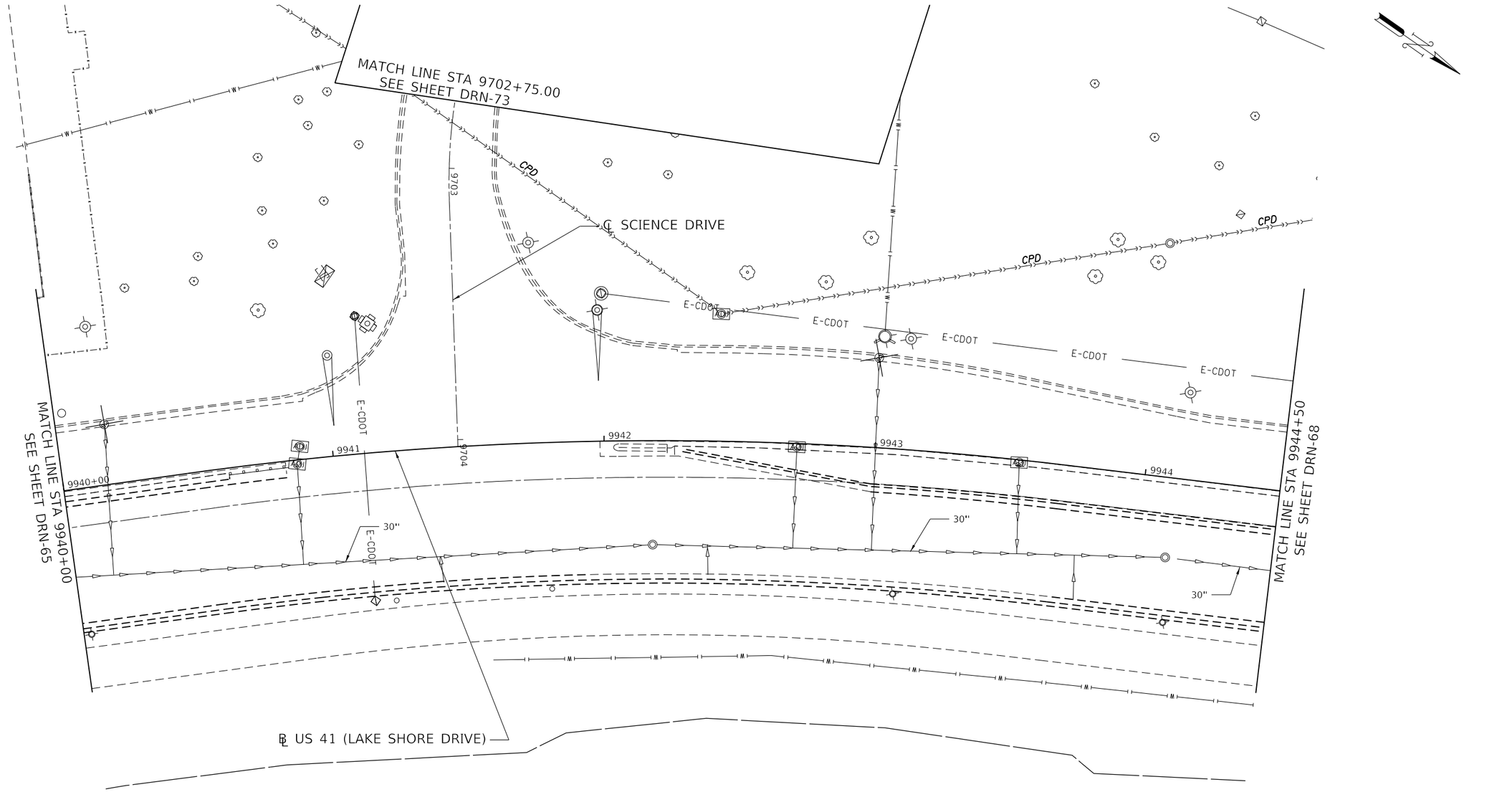


LOCATION KEY

| | | | | | |
|---|---|---|---|---|---|
| DESIGN: MSA | | | | | |
| DRAWN: MSA | | | | | |
| CHECKED: TKL | | | | | |
| APPROVED: | NO. | BY | DATE | DESCRIPTION | |
| DATE: 01/22/2021 | REVISIONS | | | | |

CHICAGO DEPARTMENT OF TRANSPORTATION

C*NECT

DRAINAGE PLAN
EXISTING CONDITIONS
S. LAKE SHORE DR.

JACKSON PARK MOBILITY IMPROVEMENTS

STA. 9940+00 TO STA. 9944+50

| | | | |
|---|---|---|---|
| CONTRACT NO. - | | TOTAL SHEETS | SHEET NO. |
| PROJECT NO. B-7-203 | | 1434 | 496 |
| SCALE: 1"=20' | DRAWING NO. DRN-66 | | |

PLOT DATE: 5/17/2021
PLOT SCALE: 40.0000 ' / in.
FILE NAME: pw:\\CTVL-PW-INT.cdot.tech.local:CivilTech Projects:Documents:Projects:3133\CADSheets\D&U\20-plnpln\sht-du-053.dgn

## PROPOSED CONDITIONS

20 0 20 40
SCALE IN FEET

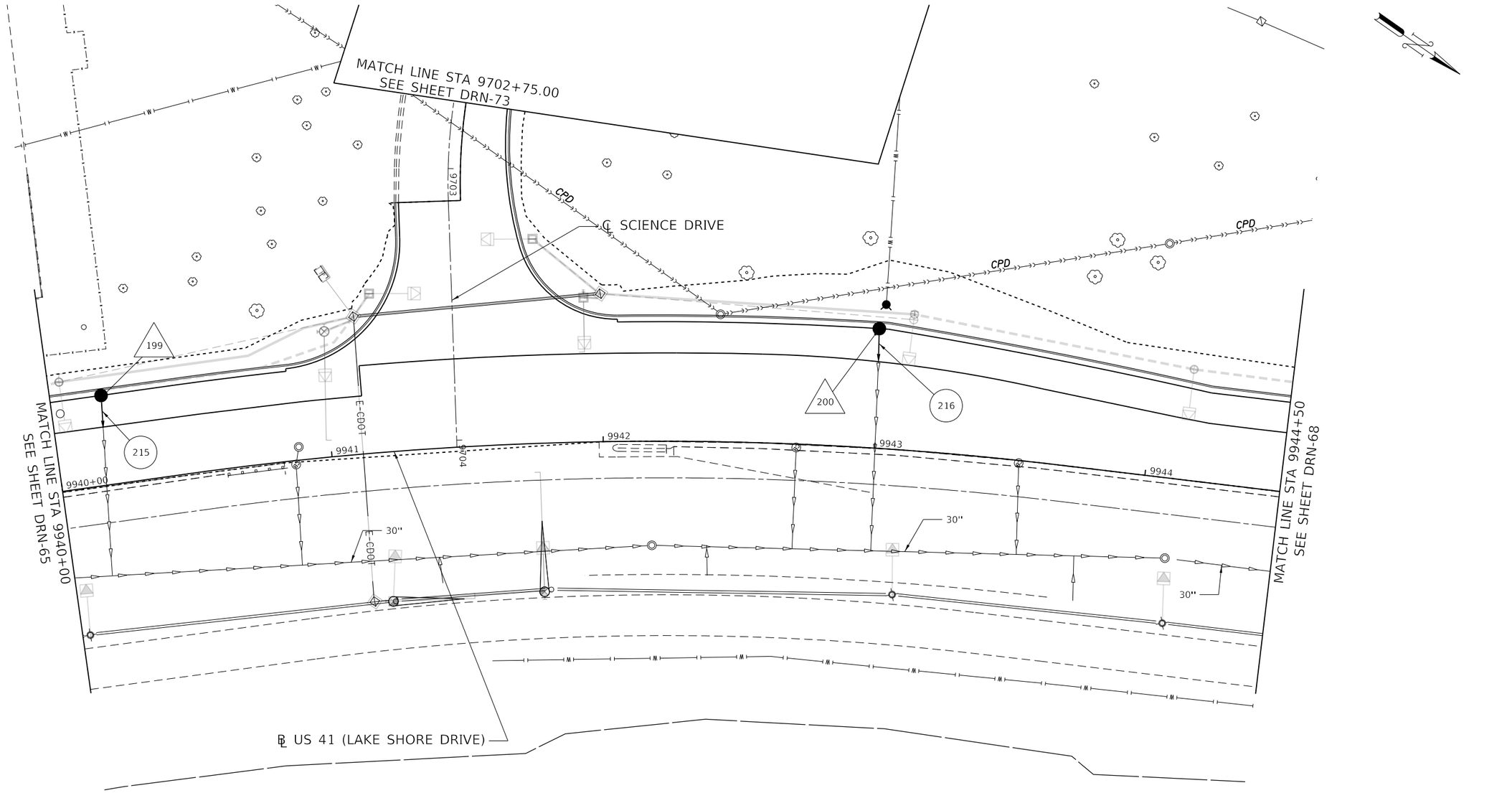


199
CB TYPE A 4' DIA, T24F&G
STA. 9940+18.89, 33.00' LT
RIM EL. 11.30
INV EL. 6.80 (NE)

200
CB TYPE A 4' DIA, T24F&G
STA. 9942+98.93, 44.00' LT
RIM EL. 11.88
INV EL. 7.38 (NE)

215
STORM SEWERS
TYPE 2, ESVCP
8" - 9' @ 0.54%
TBF - 2.0 CY

216
STORM SEWERS
TYPE 2, ESVCP
8" - 10' @ 0.54%
TBF - 2.0 CY

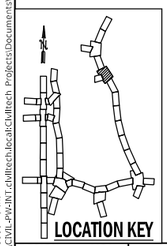

LOCATION KEY

| | | | | |
|---|---|---|---|---|
| DESIGN: MSA | | | | |
| DRAWN: MSA | | | | |
| CHECKED: TKL | | | | |
| APPROVED: | NO. | BY | DATE | DESCRIPTION |
| DATE: 01/22/2021 | REVISIONS | | | |

CDOT CHICAGO DEPARTMENT OF TRANSPORTATION

C*NECT

DRAINAGE PLAN
PROPOSED CONDITIONS
S. LAKE SHORE DR.

JACKSON PARK MOBILITY IMPROVEMENTS
STA. 9940+00 TO STA. 9944+50

| | | | |
|---|---|---|---|
| CONTRACT NO. - | | TOTAL SHEETS | SHEET NO. |
| PROJECT NO. B-7-203 | | 1434 | 497 |
| SCALE: 1"=20' | DRAWING NO. DRN-67 | | |

PLOT DATE: 5/17/2021
PLOT SCALE: 40.0000 ' / in.
FILE NAME: pw:\\CTVL-PW-INT.cdot.tech.local:CivilTech Projects\Documents\Projects\3133\CADSheets\D&U\20-plnpln\sht-du-054.dgn

## EXISTING CONDITIONS

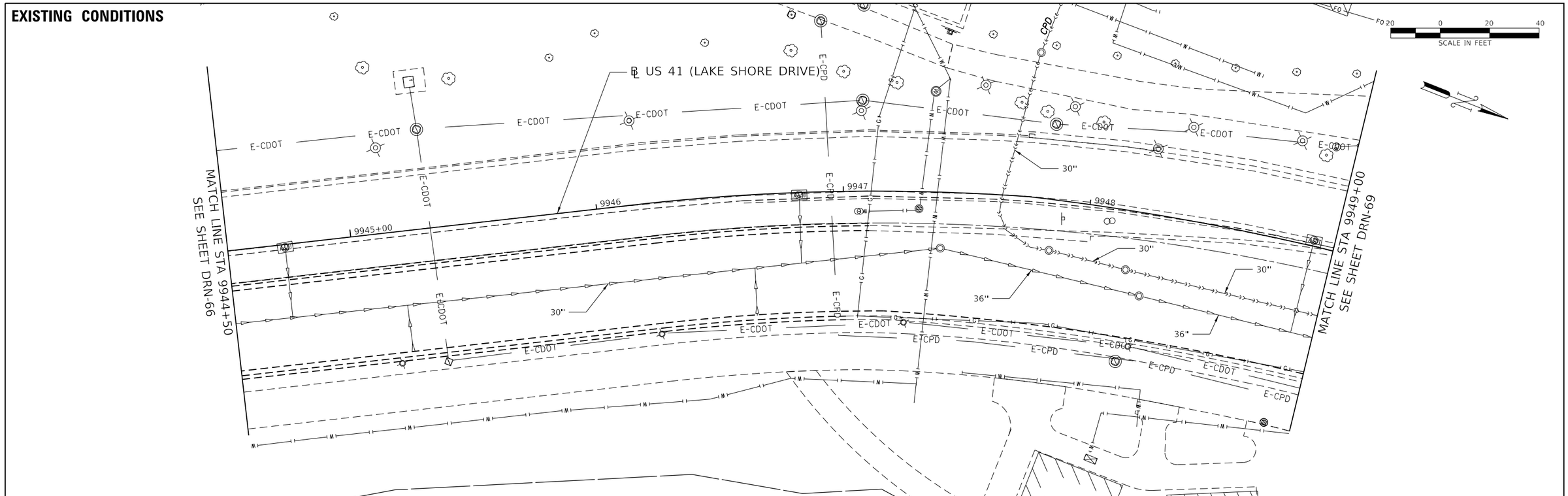


## PROPOSED CONDITIONS

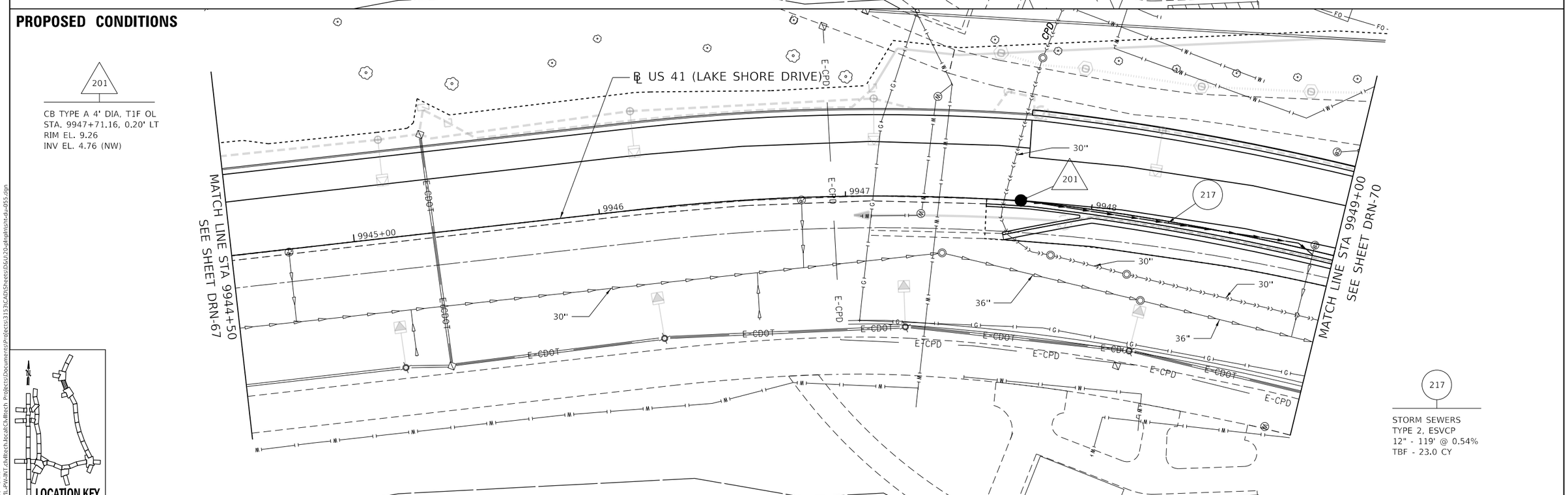


201

CB TYPE A 4' DIA, T1F OL
STA. 9947+71.16, 0.20' LT
RIM EL. 9.26
INV EL. 4.76 (NW)

217

STORM SEWERS
TYPE 2, ESVCP
12" - 119' @ 0.54%
TBF - 23.0 CY



LOCATION KEY

| | | | | |
|---|---|---|---|---|
| DESIGN: MSA | | | SREV3 | |
| DRAWN: MSA | | | SREV2 | |
| CHECKED: TKL | | | SREV1 | |
| APPROVED: | NO. | BY | DATE | DESCRIPTION |
| DATE: 01/22/2021 | REVISIONS | | | |

CDOT CHICAGO DEPARTMENT OF TRANSPORTATION

C*NECT

DRAINAGE PLAN
EXISTING & PROPOSED CONDITIONS
S. LAKE SHORE DR.

JACKSON PARK MOBILITY IMPROVEMENTS

STA. 9944+50 TO STA. 9949+00

| | | |
|---|---|---|
| CONTRACT NO. - | TOTAL SHEETS | SHEET NO. |
| PROJECT NO. B-7-203 | 1434 | 498 |
| SCALE: 1"=20' | DRAWING NO. DRN-68 | |

PLOT DATE: 5/17/2021
PLOT SCALE: 40.0000 ' / in.
FILE NAME: pw:\\CIVIL-PW-INT.civiltech.local:Civiltech Projects\Documents\Projects\3153\CAD\Sheets\D&U\20-plnpln\sht-du-055.dgn

## EXISTING CONDITIONS

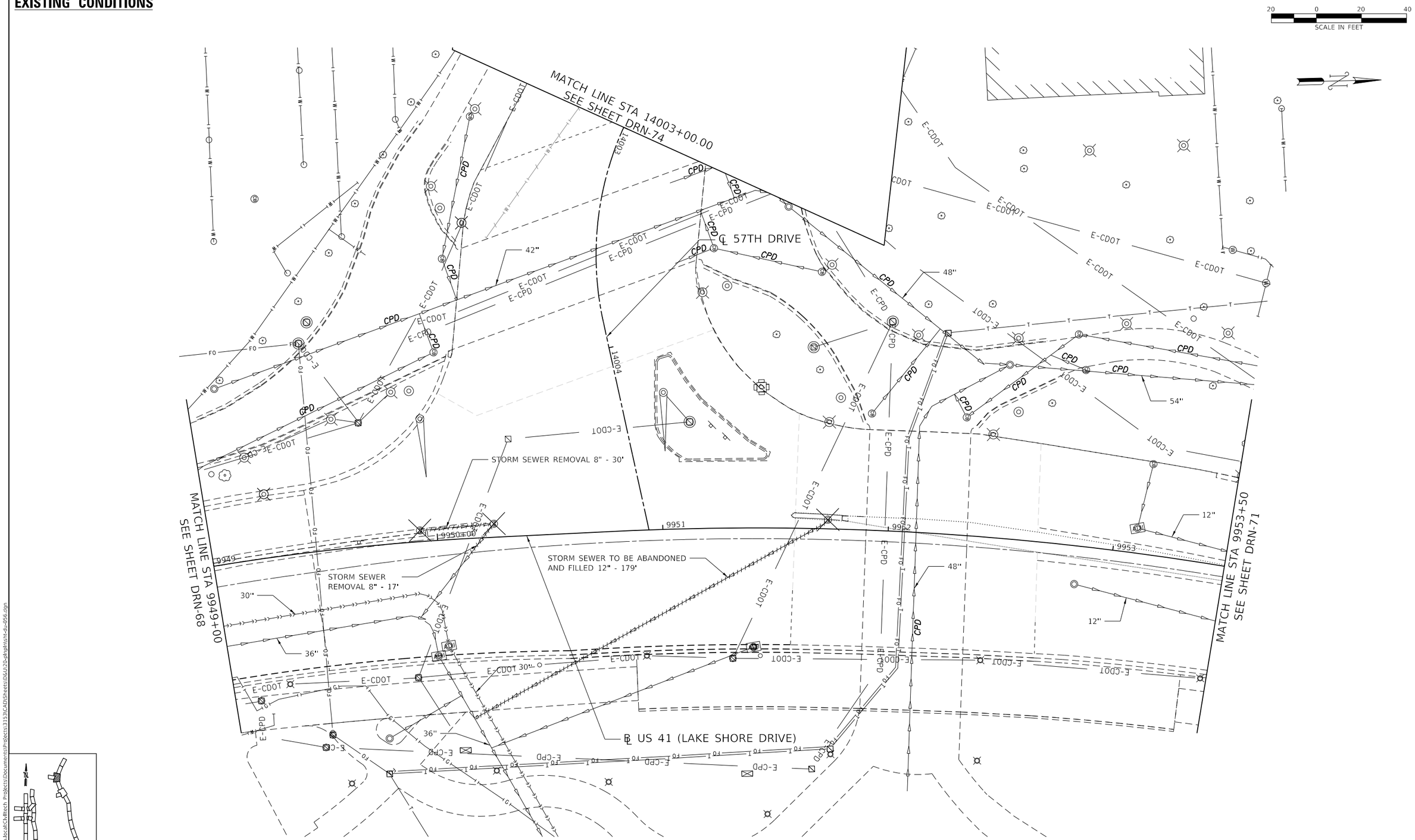


| | | | | |
|---|---|---|---|---|
| DESIGN: MSA | | | | |
| DRAWN: MSA | | | | |
| CHECKED: TKL | | | | |
| APPROVED: | NO. | BY | DATE | DESCRIPTION |
| DATE: 01/22/2021 | REVISIONS | | | |

CDOT CHICAGO DEPARTMENT OF TRANSPORTATION

C*NECT

DRAINAGE PLAN
EXISTING CONDITIONS
S. LAKE SHORE DR.

JACKSON PARK MOBILITY IMPROVEMENTS

STA. 9949+00 TO STA. 9953+50

| | | |
|---|---|---|
| CONTRACT NO. - | TOTAL SHEETS 1434 | SHEET NO. 499 |
| PROJECT NO. B-7-203 | DRAWING NO. DRN-69 | |
| SCALE: 1"=20' | | |

PLOT DATE: 5/17/2021
PLOT SCALE: 40.0000 ' / in.
FILE NAME: pw:\\CIVIL-PW-INT.civiltech.local:Civiltech Projects\Documents\Projects\3153\CAD\Sheets\D&U\20-plnpln\sht-du-056.dgn

## PROPOSED CONDITIONS

202

CB TYPE A 4' DIA, T1F OL
STA. 9949+90.86, 0.00' RT/LT
RIM EL. 8.55
INV EL. 4.05 (NE)

203

CB TYPE A 4' DIA, T1F OL
STA. 9950+14.51, 6.20' RT
RIM EL. 8.28
INV EL. 4.05 (EX SE)

204

CB TYPE A, 4' DIA, T1F OL
STA. 9952+92.23, 0.00' RT/LT
RIM EL. 9.30
INV EL. 4.79 (NW)

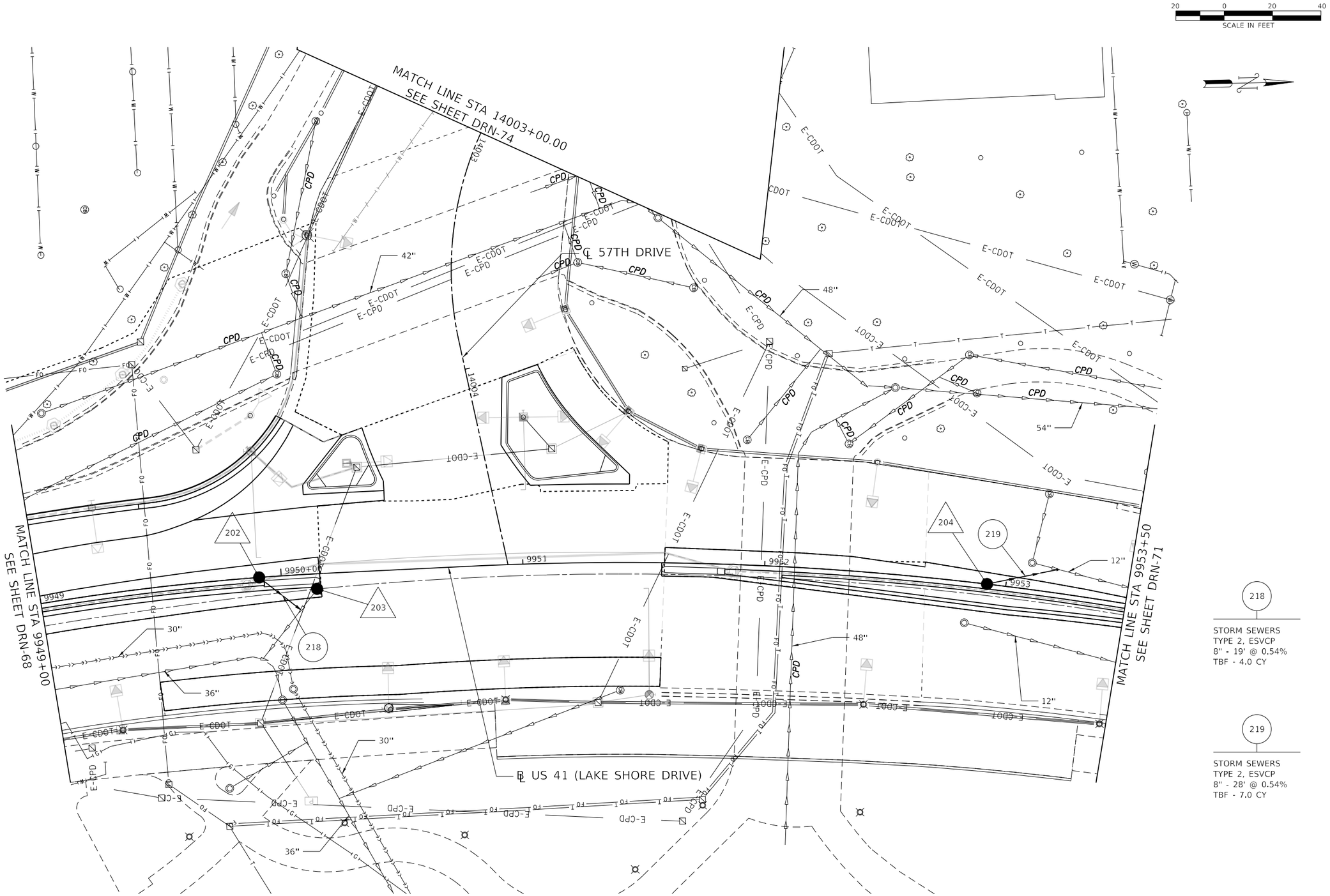


218

STORM SEWERS
TYPE 2, ESVCP
8" - 19' @ 0.54%
TBF - 4.0 CY

219

STORM SEWERS
TYPE 2, ESVCP
8" - 28' @ 0.54%
TBF - 7.0 CY

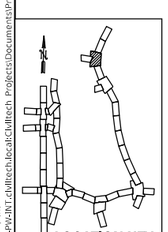

LOCATION KEY

PLOT DATE: 5/17/2021
PLOT SCALE: 40.0000 ' / in.
FILE NAME: pw:\\CIVIL-PW-INT.civiltech.local:Civiltech Projects\Documents\Projects\3153\CAD\Sheets\D&U\20-plnpln\sht-du-057.dgn

| | | | | | |
|---|---|---|---|---|---|
| DESIGN: | MSA | | | | |
| DRAWN: | MSA | | | | |
| CHECKED: | TKL | | | | |
| APPROVED: | | NO. | BY | DATE | DESCRIPTION |
| DATE: 01/22/2021 | | REVISIONS | | | |

CDOT CHICAGO DEPARTMENT OF TRANSPORTATION

C*NECT

DRAINAGE PLAN
PROPOSED CONDITIONS
S. LAKE SHORE DR.

JACKSON PARK MOBILITY IMPROVEMENTS

STA. 9949+00 TO STA. 9953+50

| | | |
|---|---|---|
| CONTRACT NO. - | TOTAL SHEETS 1434 | SHEET NO. 500 |
| PROJECT NO. B-7-203 | DRAWING NO. DRN-70 | |
| SCALE: 1"=20' | | |

## EXISTING CONDITIONS

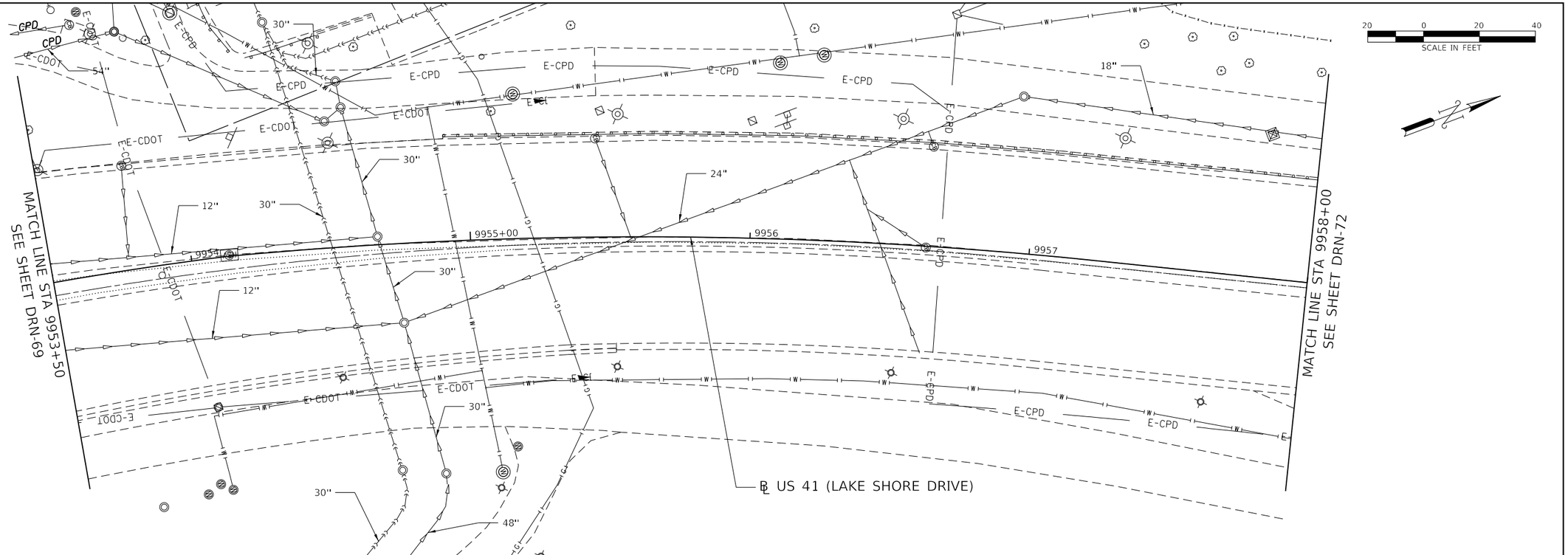


## PROPOSED CONDITIONS

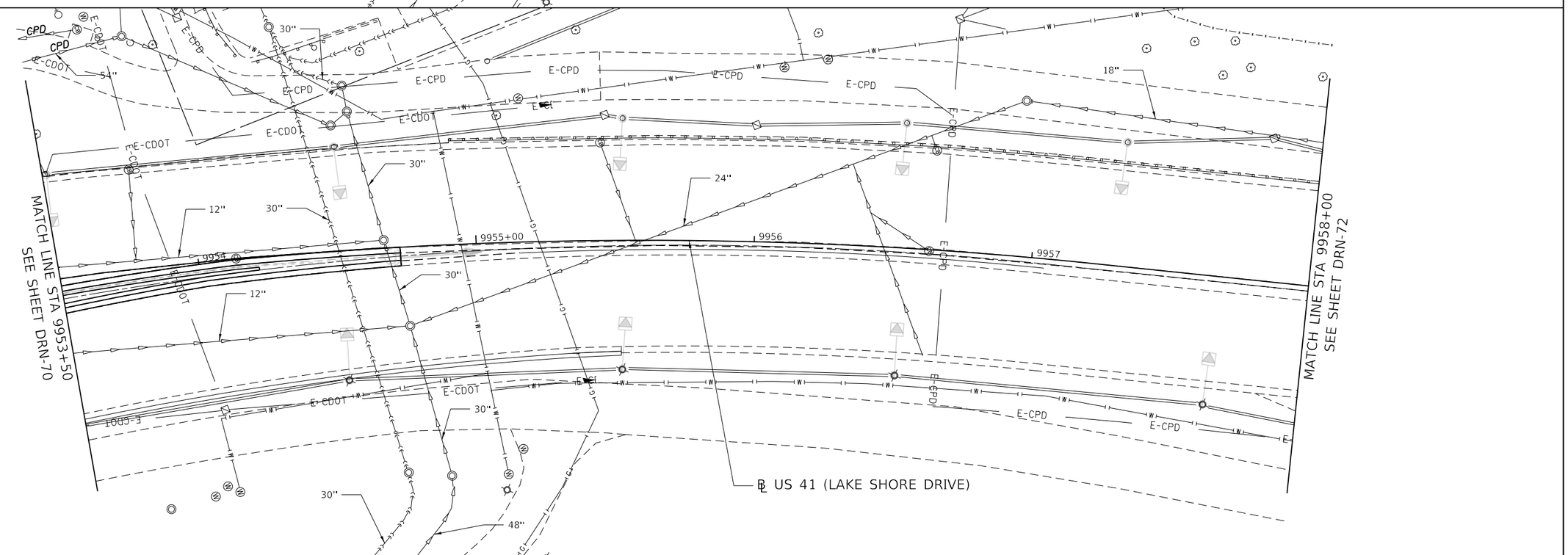


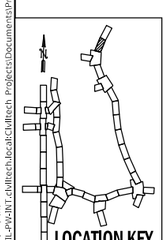


PLOT DATE: 5/17/2021
PLOT SCALE: 40.0000 ' / in.
FILE NAME: pw:\\CIVIL-PW-INT.civiltech.local:Civiltech Projects\Documents\Projects\3153\CAD\Sheets\D&U\20-plnpln\sht-du-058.dgn

| | | | | | |
|---|---|---|---|---|---|
| DESIGN: | MSA | | | $REV3 | |
| DRAWN: | MSA | | | $REV2 | |
| CHECKED: | TKL | | | $REV1 | |
| APPROVED: | | NO. | BY | DATE | DESCRIPTION |
| DATE: 01/22/2021 | | REVISIONS | | | |

CDOT CHICAGO DEPARTMENT OF TRANSPORTATION

C*NECT

DRAINAGE PLAN
EXISTING & PROPOSED CONDITIONS
S. LAKE SHORE DR.

JACKSON PARK MOBILITY IMPROVEMENTS

STA. 9953+50 TO STA. 9958+00

| | | | |
|---|---|---|---|
| CONTRACT NO. - | TOTAL SHEETS | SHEET NO. |
| PROJECT NO. B-7-203 | 1434 | 501 |
| SCALE: 1"=20' | DRAWING NO. DRN-71 | |

## EXISTING CONDITIONS

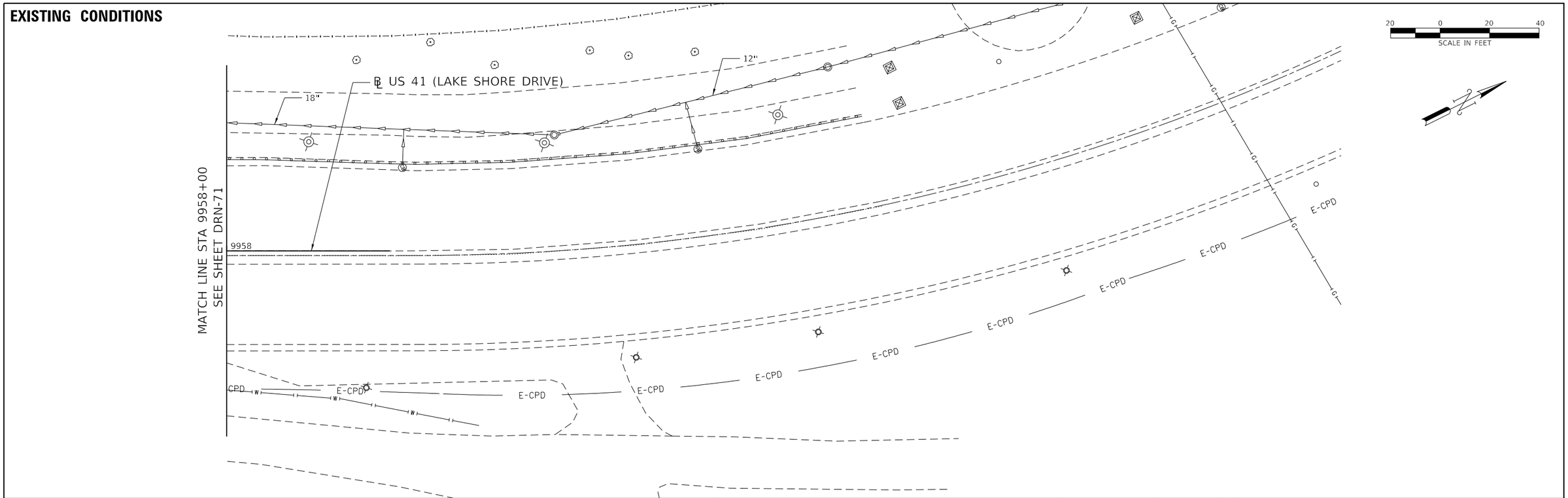


## PROPOSED CONDITIONS

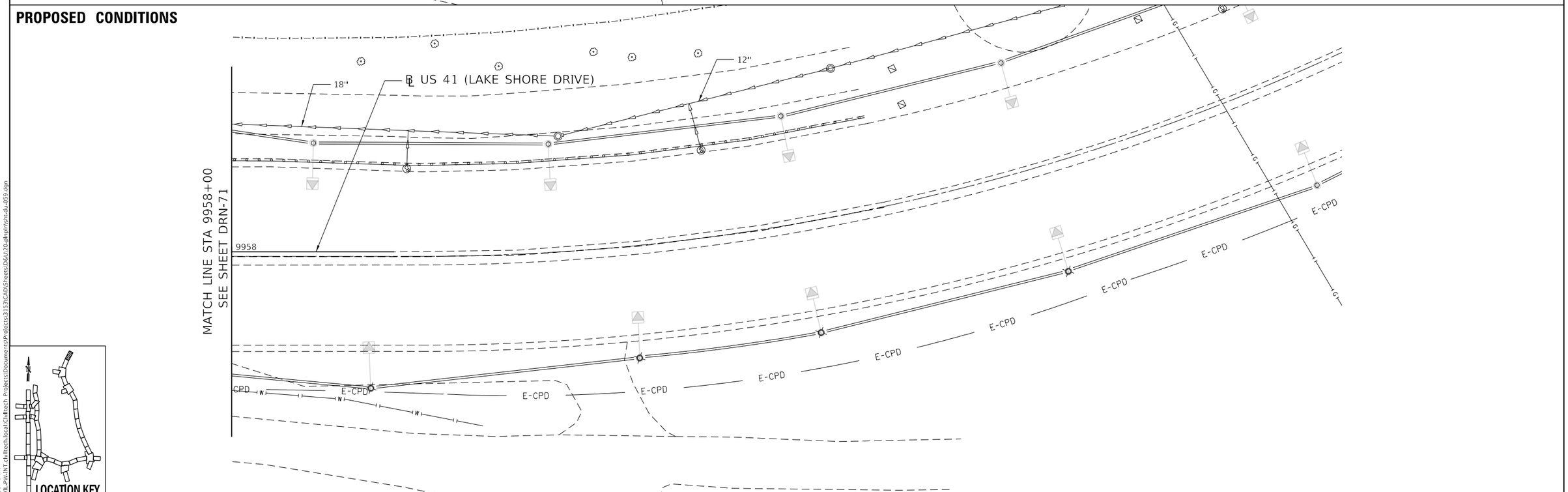





| | | | | | |
|---|---|---|---|---|---|
| DESIGN: | MSA | | | $REV3 | |
| DRAWN: | MSA | | | $REV2 | |
| CHECKED: | TKL | | | $REV1 | |
| APPROVED: | | NO. | BY | DATE | DESCRIPTION |
| DATE: 01/22/2021 | | REVISIONS | | | |

CDOT CHICAGO DEPARTMENT OF TRANSPORTATION

C*NECT

DRAINAGE PLAN
EXISTING & PROPOSED CONDITIONS
S. LAKE SHORE DR.

JACKSON PARK MOBILITY IMPROVEMENTS

STA. 9958+00 TO STA. 9958+50

| | | |
|---|---|---|
| CONTRACT NO. - | TOTAL SHEETS 1434 | SHEET NO. 502 |
| PROJECT NO. B-7-203 | DRAWING NO. DRN-72 | |
| SCALE: 1"=20' | | |

PLOT DATE: 5/17/2021
PLOT SCALE: 40.0000 ' / in.
FILE NAME: pw:\\CIVIL-PW-INT.civiltech.local:Civiltech Projects\Documents\Projects\3153\CAD\Sheets\D&U\20-plnpln\sht-du-059.dgn

## EXISTING CONDITIONS

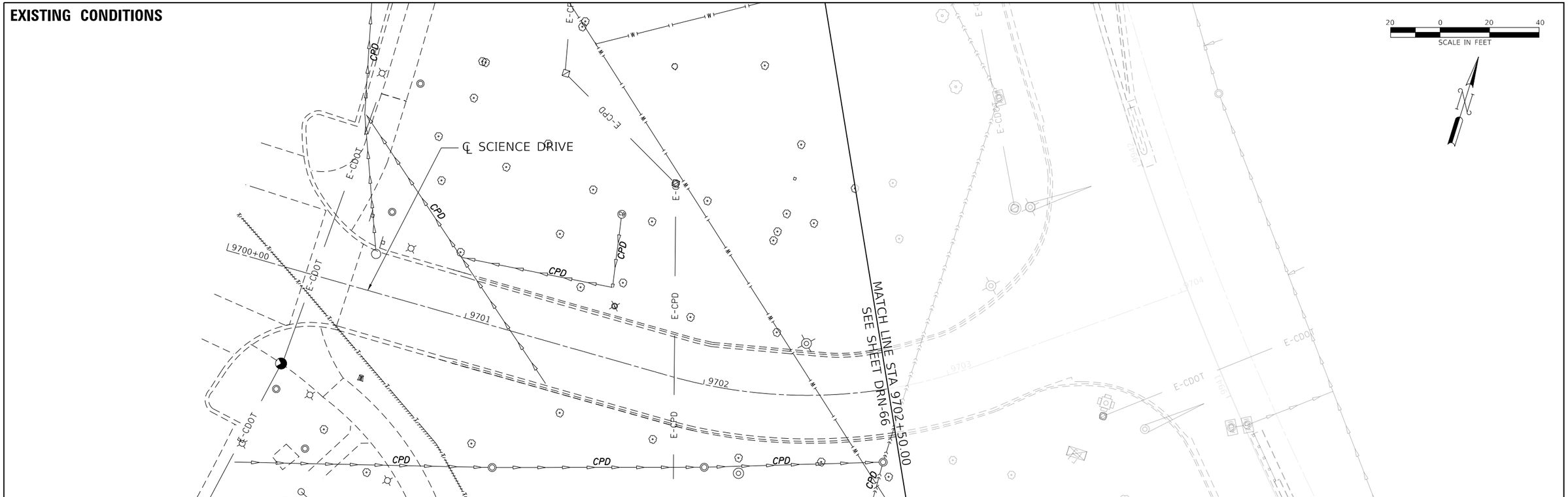


## PROPOSED CONDITIONS

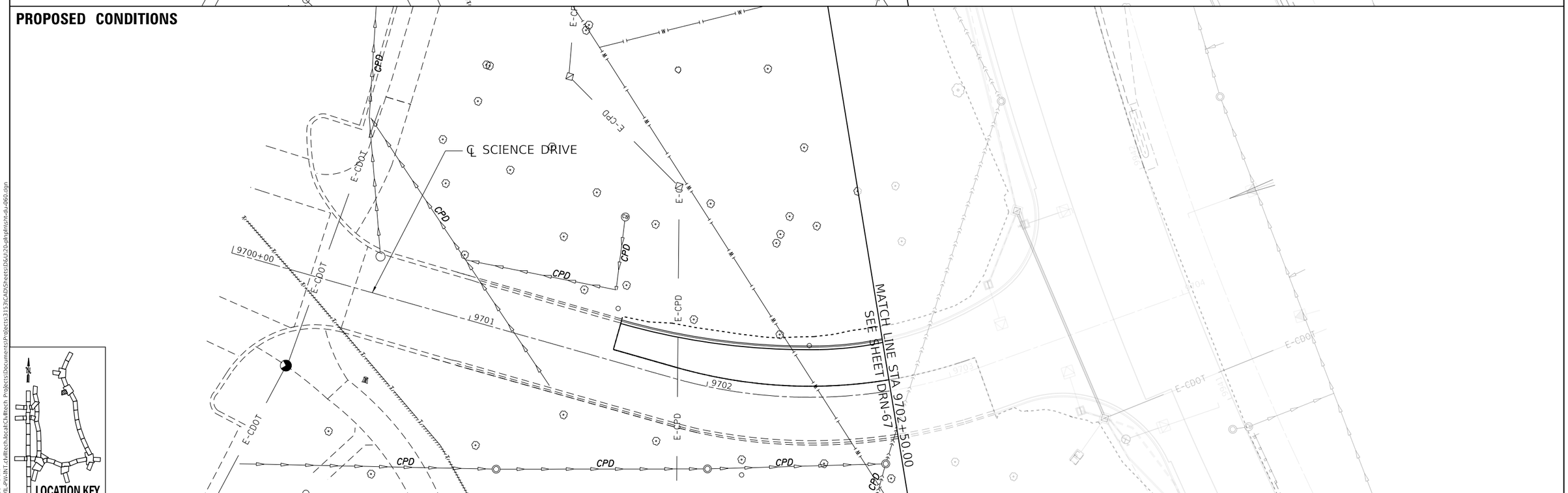




LOCATION KEY

| | | | | | |
|---|---|---|---|---|---|
| DESIGN: | MSA | | | $REV3 | |
| DRAWN: | MSA | | | $REV2 | |
| CHECKED: | TKL | | | $REV1 | |
| APPROVED: | | NO. | BY | DATE | DESCRIPTION |
| DATE: 01/22/2021 | | | | REVISIONS | |

CDOT CHICAGO DEPARTMENT OF TRANSPORTATION

C*NECT

DRAINAGE PLAN
EXISTING & PROPOSED CONDITIONS
E. SCIENCE DR.

JACKSON PARK MOBILITY IMPROVEMENTS

STA. 9700+00 TO STA. 9702+50

| | | |
|---|---|---|
| CONTRACT NO. - | TOTAL SHEETS 1434 | SHEET NO. 503 |
| PROJECT NO. B-7-203 | DRAWING NO. DRN-73 | |
| SCALE: 1"=20' | | |

PLOT DATE: 5/17/2021
PLOT SCALE: 40.0000 ' / in.
FILE NAME: pw:\\CIVIL-PW-INT.civiltech.local:Civiltech Projects\Documents\Projects\3153\CAD\Sheets\D&U\20-plnpln\sht-du-060.dgn

## EXISTING CONDITIONS

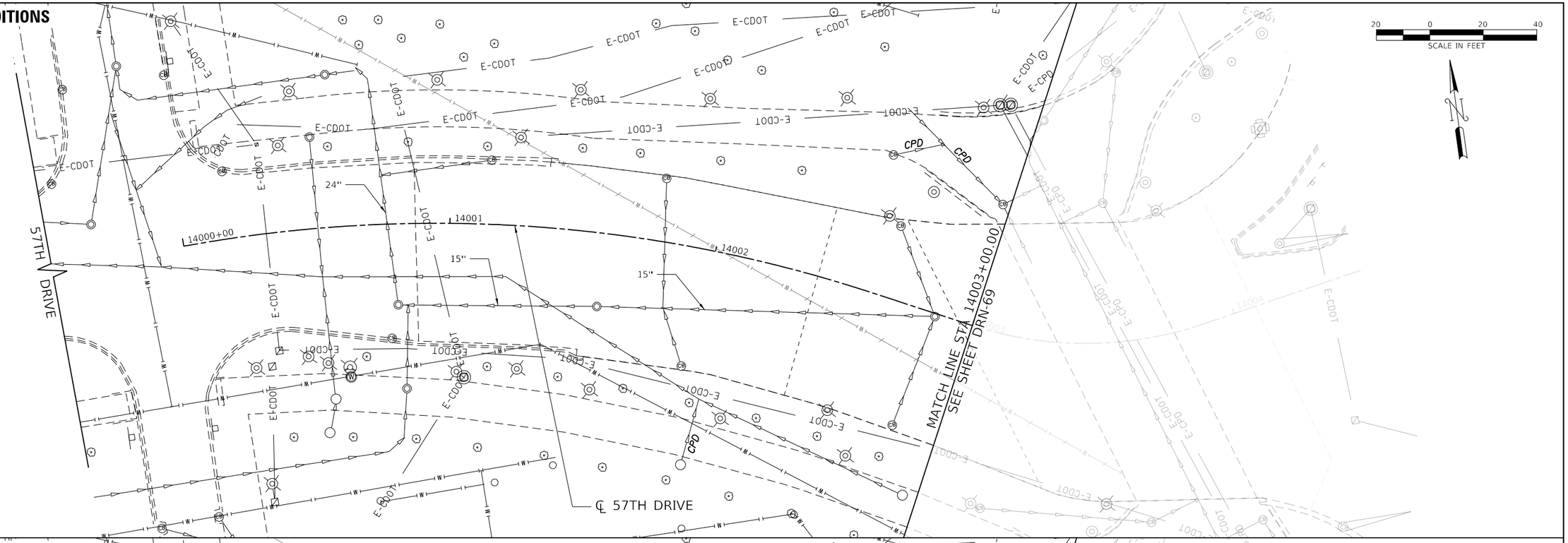


## PROPOSED CONDITIONS

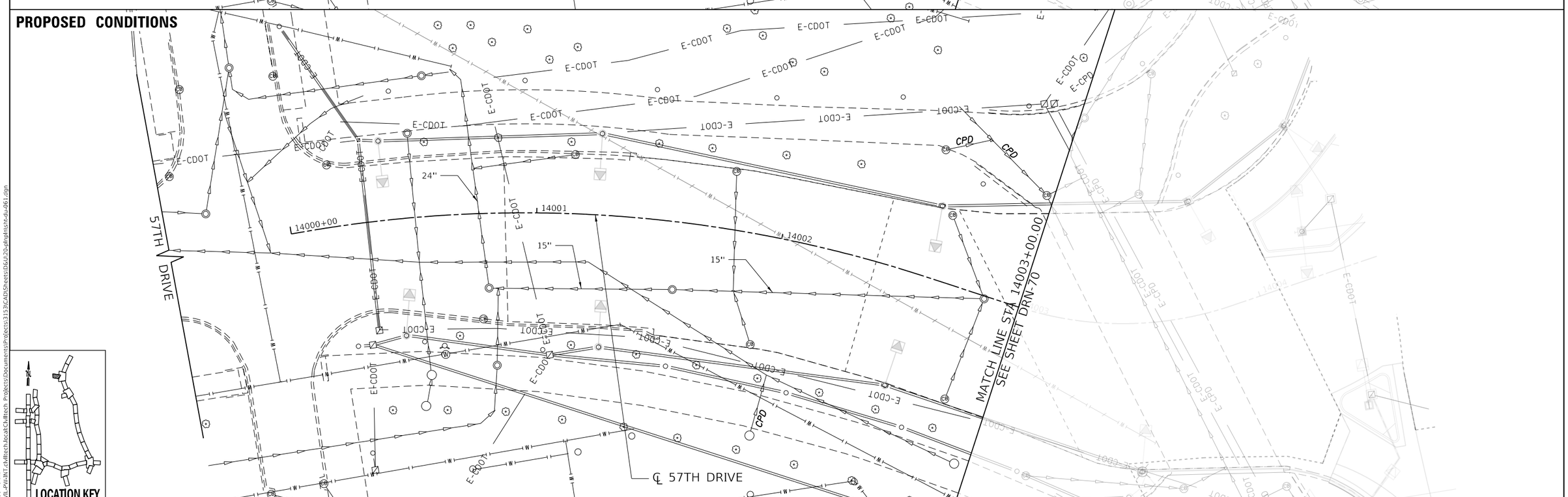





LOCATION KEY

PLOT DATE: 5/17/2021
PLOT SCALE: 40.0000 ' / in.
FILE NAME: pw:\\CIVIL-PW-INT.civiltech.local:Civiltech Projects\Documents\Projects\3153\CAD\Sheets\D&U\20-plnpln\sht-du-061.dgn

| | | | | | |
|---|---|---|---|---|---|
| DESIGN: | MSA | | | $REV3 | |
| DRAWN: | MSA | | | $REV2 | |
| CHECKED: | TKL | | | $REV1 | |
| APPROVED: | | NO. | BY | DATE | DESCRIPTION |
| DATE: 01/22/2021 | | REVISIONS | | | |

CDOT CHICAGO DEPARTMENT OF TRANSPORTATION

C*NECT

DRAINAGE PLAN
EXISTING & PROPOSED CONDITIONS
E. 57TH DR.

JACKSON PARK MOBILITY IMPROVEMENTS

STA. 14000+00 TO STA. 14004+00

| | | |
|---|---|---|
| CONTRACT NO. - | TOTAL SHEETS 1434 | SHEET NO. 504 |
| PROJECT NO. B-7-203 | DRAWING NO. DRN-74 | |
| SCALE: 1"=20' | | |

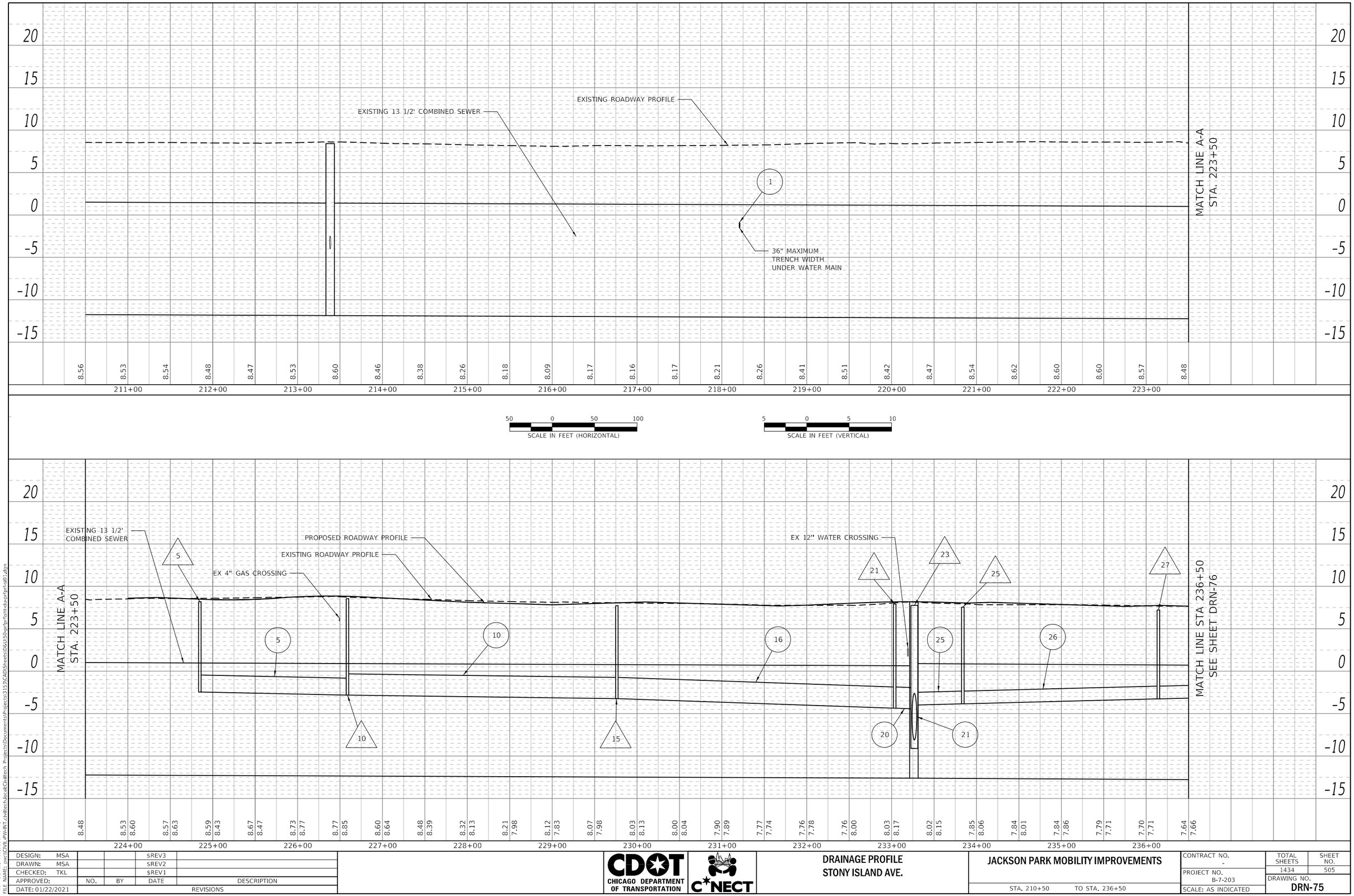


PLAN
NOTE BOOK NO.
SURVEYED
PLOTTED
ALIGNMENT CHECKED
RT. OF WAY CHECKED
CADD FILE NAME
BY
DATE

PROFILE
NOTE BOOK NO.
SURVEYED
PLOTTED
GRADES CHECKED
B.M. NOTED
STRUCTURE NOTATIONS CHKD
BY
DATE

PLOT DATE: 5/17/2021
PLOT SCALE: 100.0000 ' / in.
FILE NAME: pw:\\CIVIL-PW-INT.civiltech.local:Civiltech Projects\Documents\Projects\3153\CAD\Sheets\D&U\50-prfprf\sht-du-prfprf-si01.dgn

| | | | | |
|---|---|---|---|---|
| DESIGN: MSA | | | SREV3 | |
| DRAWN: MSA | | | SREV2 | |
| CHECKED: TKL | | | SREV1 | |
| APPROVED: | NO. | BY | DATE | DESCRIPTION |
| DATE: 01/22/2021 | REVISIONS | | | |

CDOT CHICAGO DEPARTMENT OF TRANSPORTATION

C*NECT

**DRAINAGE PROFILE**
**STONY ISLAND AVE.**

**JACKSON PARK MOBILITY IMPROVEMENTS**

STA. 210+50 TO STA. 236+50

CONTRACT NO. -
PROJECT NO. B-7-203
SCALE: AS INDICATED

| TOTAL SHEETS | SHEET NO. |
|---|---|
| 1434 | 505 |

DRAWING NO. **DRN-75**

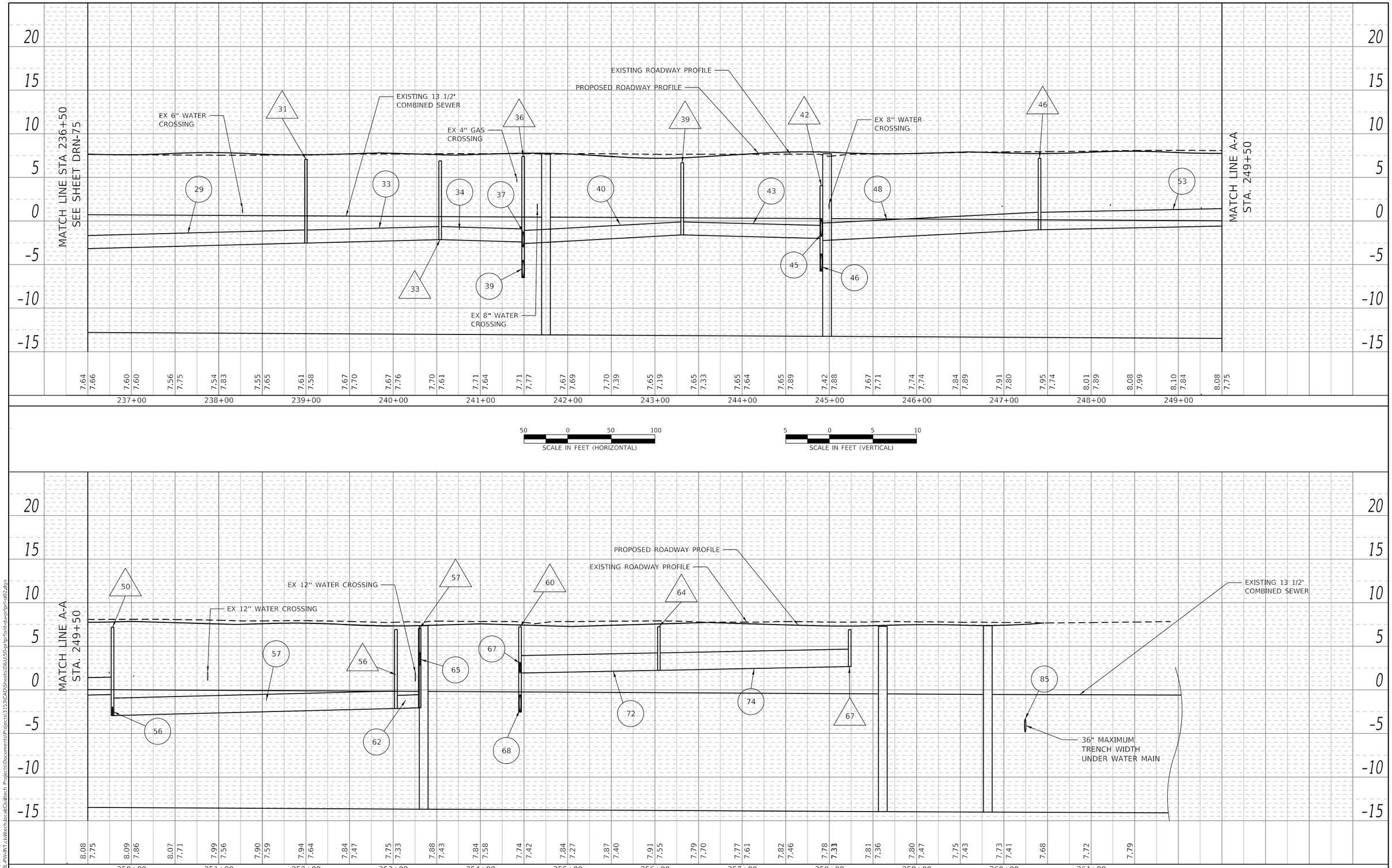


PLAN

NOTE BOOK NO.

SURVEYED
PLOTTED
ALIGNMENT CHECKED
RT. OF WAY CHECKED
CADD FILE NAME

BY | DATE

PROFILE

NOTE BOOK NO.

SURVEYED
PLOTTED
GRADES CHECKED
B.M. NOTED
STRUCTURE NOTATIONS CHKD

BY | DATE

PLOT DATE: 5/17/2021
PLOT SCALE: 100.0000 ' / in.
FILE NAME: pw:\\CIVIL-PW-INT.civiltech.local:Civiltech Projects\Documents\Projects\3153\CAD\Sheets\D&U\50-prfprf\sht-du-prfprf-si02.dgn

| | | | | |
|---|---|---|---|---|
| DESIGN: MSA | | | SREV3 | |
| DRAWN: MSA | | | SREV2 | |
| CHECKED: TKL | | | SREV1 | |
| APPROVED: | NO. | BY | DATE | DESCRIPTION |
| DATE: 01/22/2021 | REVISIONS | | | |

CDOT CHICAGO DEPARTMENT OF TRANSPORTATION

C*NECT

**DRAINAGE PROFILE**
**STONY ISLAND AVE.**

**JACKSON PARK MOBILITY IMPROVEMENTS**

STA. 236+50 TO STA. 262+00

CONTRACT NO. -
PROJECT NO. B-7-203
SCALE: AS INDICATED

| TOTAL SHEETS | SHEET NO. |
|---|---|
| 1434 | 506 |

DRAWING NO. **DRN-76**

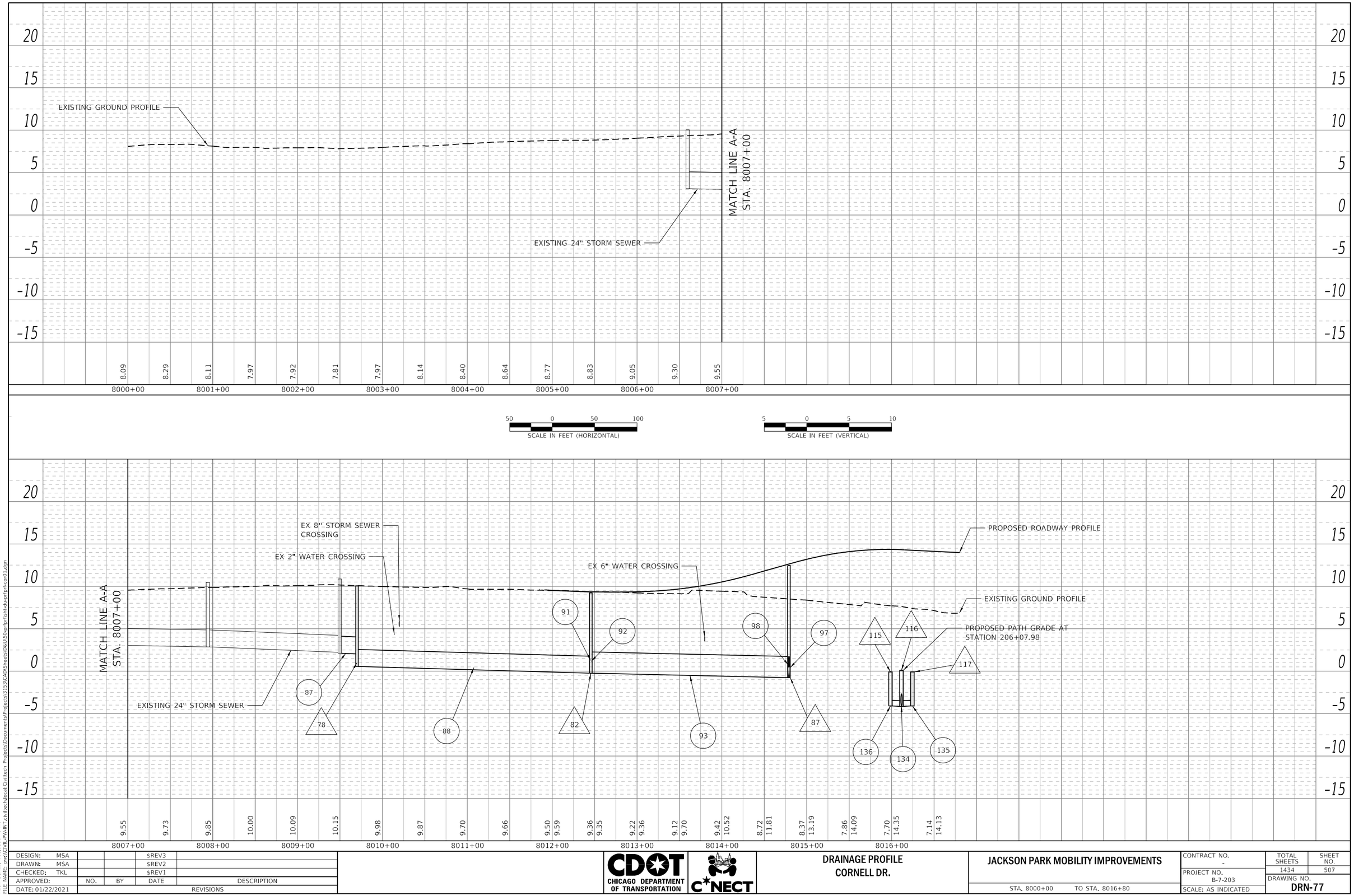


PLAN
NOTE BOOK NO.
SURVEYED
PLOTTED
ALIGNMENT CHECKED
RT. OF WAY CHECKED
CADD FILE NAME
BY
DATE

PROFILE
NOTE BOOK NO.
SURVEYED
PLOTTED
GRADES CHECKED
B.M. NOTED
STRUCTURE NOTATIONS CHKD
BY
DATE

PLOT DATE: 5/17/2021
PLOT SCALE: 100.0000 ' / in.
FILE NAME: pw:\\CIVIL-PW-INT.civiltech.local:Civiltech Projects\Documents\Projects\3153\CAD\Sheets\D&U\50-prfprf\sht-du-prfprf-cor01.dgn

| | | | | | |
|---|---|---|---|---|---|
| DESIGN: MSA | | | SREV3 | | |
| DRAWN: MSA | | | SREV2 | | |
| CHECKED: TKL | | | SREV1 | | |
| APPROVED: | NO. | BY | DATE | DESCRIPTION | |
| DATE: 01/22/2021 | REVISIONS | | | | |

CDOT CHICAGO DEPARTMENT OF TRANSPORTATION

C*NECT

DRAINAGE PROFILE
CORNELL DR.

JACKSON PARK MOBILITY IMPROVEMENTS

STA. 8000+00 TO STA. 8016+80

CONTRACT NO. -
PROJECT NO. B-7-203
SCALE: AS INDICATED

| TOTAL SHEETS | SHEET NO. |
|---|---|
| 1434 | 507 |

DRAWING NO. DRN-77

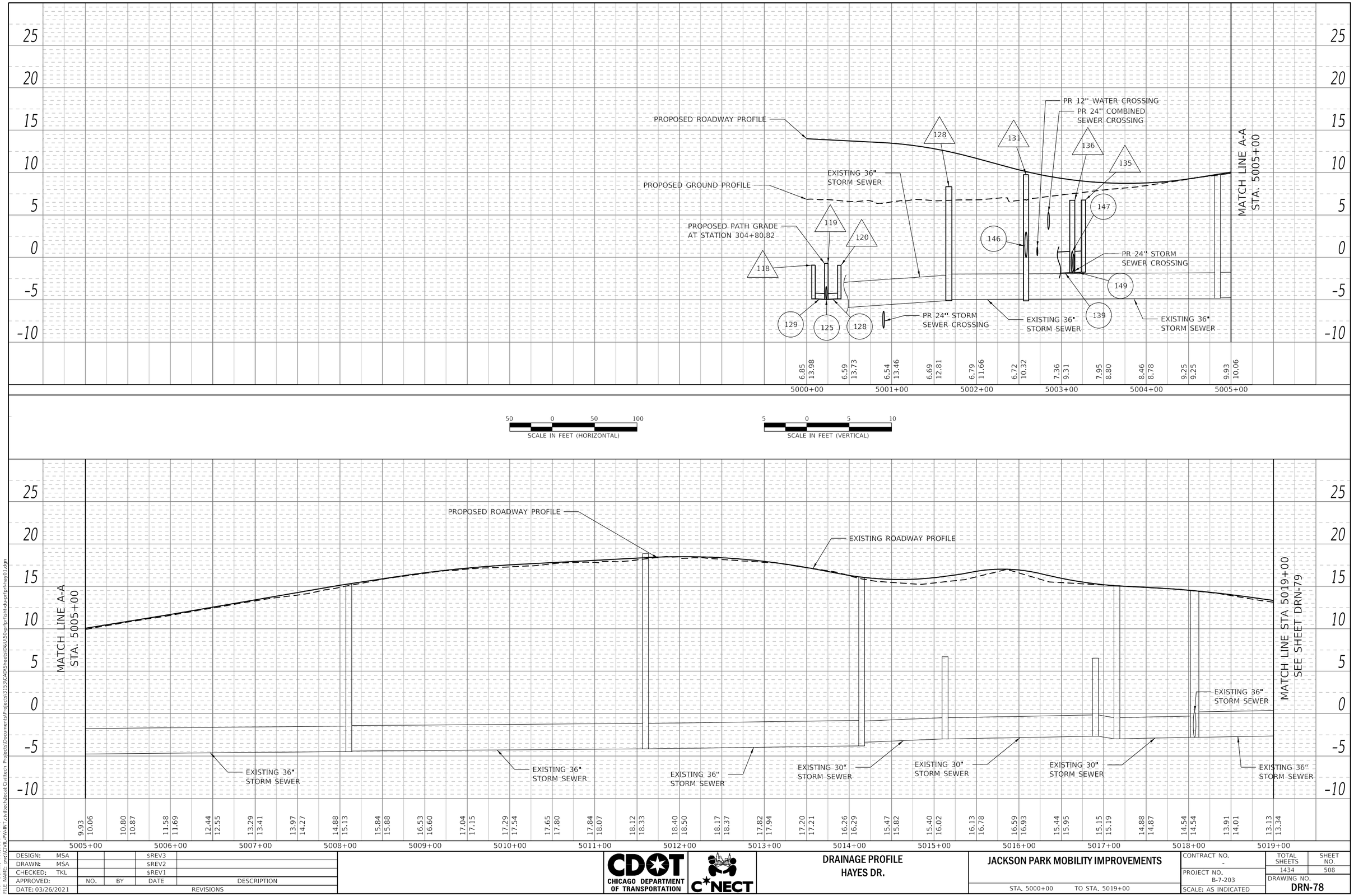


PLAN
NOTE BOOK NO.
SURVEYED
PLOTTED
ALIGNMENT CHECKED
RT. OF WAY CHECKED
CADD FILE NAME
BY
DATE

PROFILE
NOTE BOOK NO.
SURVEYED
PLOTTED
GRADES CHECKED
B.M. NOTED
STRUCTURE NOTATIONS CHKD
BY
DATE

PLOT DATE: 5/17/2021
PLOT SCALE: 100.0000 ' / in.
FILE NAME: pw:\\CIVIL-PW-INT.civiltech.local:Civiltech Projects\Documents\Projects\3153\CAD\Sheets\D&U\50-prfprf\sht-du-prfprf-hay01.dgn

| | | | | |
|---|---|---|---|---|
| DESIGN: MSA | | | SREV3 | |
| DRAWN: MSA | | | SREV2 | |
| CHECKED: TKL | | | SREV1 | |
| APPROVED: | NO. | BY | DATE | DESCRIPTION |
| DATE: 03/26/2021 | REVISIONS | | | |

CDOT CHICAGO DEPARTMENT OF TRANSPORTATION

C*NECT

DRAINAGE PROFILE
HAYES DR.

JACKSON PARK MOBILITY IMPROVEMENTS

STA. 5000+00 TO STA. 5019+00

CONTRACT NO. -
PROJECT NO. B-7-203
SCALE: AS INDICATED

| TOTAL SHEETS | SHEET NO. |
|---|---|
| 1434 | 508 |

DRAWING NO. DRN-78

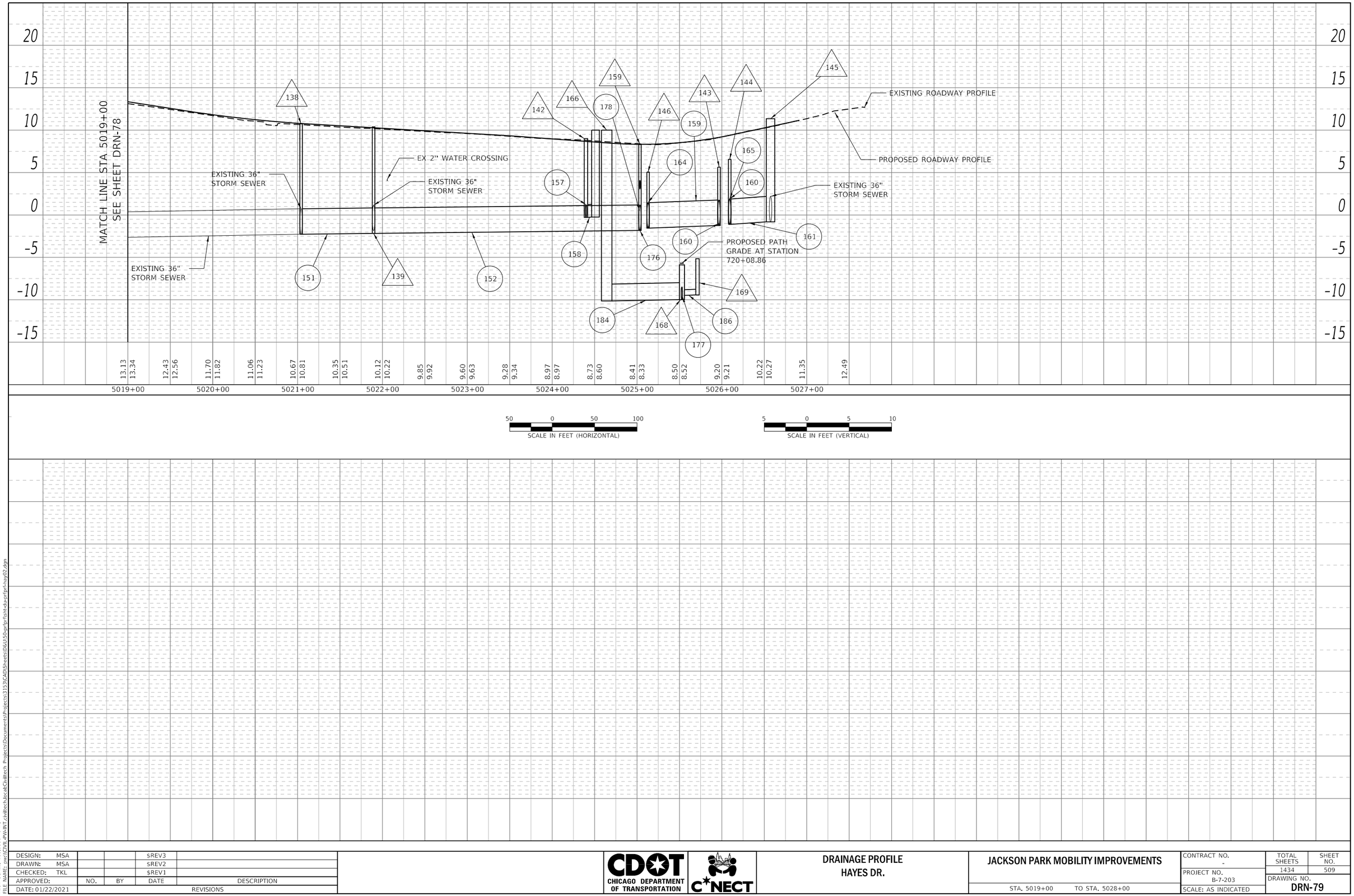


PLAN
NOTE BOOK NO.
SURVEYED
PLOTTED
ALIGNMENT CHECKED
RT. OF WAY CHECKED
CADD FILE NAME
BY
DATE

PROFILE
NOTE BOOK NO.
SURVEYED
PLOTTED
GRADES CHECKED
B.M. NOTED
STRUCTURE NOTATIONS CHKD
BY
DATE

PLOT DATE: 5/17/2021
PLOT SCALE: 100.0000 ' / in.
FILE NAME: pw:\\CIVIL-PW-INT.civiltech.local:Civiltech Projects\Documents\Projects\3153\CAD\Sheets\D&U\50-prfprf\sht-du-prfprf-hay02.dgn

| | | | | | |
|---|---|---|---|---|---|
| DESIGN: | MSA | | | $REV3 | |
| DRAWN: | MSA | | | $REV2 | |
| CHECKED: | TKL | | | $REV1 | |
| APPROVED: | | NO. | BY | DATE | DESCRIPTION |
| DATE: 01/22/2021 | | REVISIONS | | | |

CDOT CHICAGO DEPARTMENT OF TRANSPORTATION

C*NECT

DRAINAGE PROFILE
HAYES DR.

JACKSON PARK MOBILITY IMPROVEMENTS

STA. 5019+00 TO STA. 5028+00

CONTRACT NO. -
PROJECT NO. B-7-203
SCALE: AS INDICATED

| TOTAL SHEETS | SHEET NO. |
|---|---|
| 1434 | 509 |

DRAWING NO. DRN-79

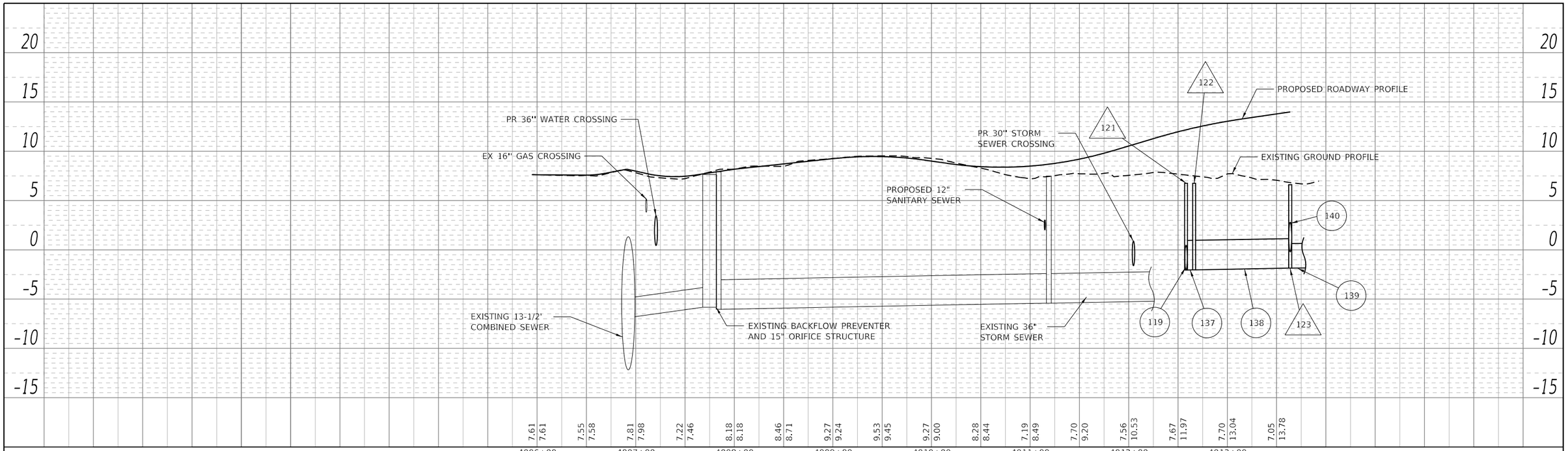


PLAN
NOTE BOOK
NO.
SURVEYED
PLOTTED
ALIGNMENT CHECKED
RT. OF WAY CHECKED
CADD FILE NAME
BY
DATE

PROFILE
NOTE BOOK
NO.
SURVEYED
PLOTTED
GRADES CHECKED
BM. NOTED
STRUCTURE NOTATIONS CHKD
BY
DATE

PLOT DATE= 5/17/2021
PLOT SCALE= 100.0000 ' / in.
FILE NAME= pw:\\CIVIL-PW-INT.civiltech.local\CivilTech Projects\Documents\Projects\3133\CADD\Sheets\DK6U50-prfpr1sht-da-prfpr-f6301.dgn

| | | | | | |
|---|---|---|---|---|---|
| DESIGN: MSA | | | | $REV3 | |
| DRAWN: MSA | | | | $REV2 | |
| CHECKED: TKL | | | | $REV1 | |
| APPROVED: | NO. | BY | DATE | | DESCRIPTION |
| DATE: 01/22/2021 | REVISIONS | | | | |

CDOT CHICAGO DEPARTMENT OF TRANSPORTATION

C*NECT

DRAINAGE PROFILE
63RD ST.

JACKSON PARK MOBILITY IMPROVEMENTS

STA. 4005+00 TO STA. 4013+64

| | |
|---|---|
| CONTRACT NO. - | TOTAL SHEETS 1434 |
| PROJECT NO. B-7-203 | SHEET NO. 510 |
| SCALE: AS INDICATED | DRAWING NO. DRN-80 |

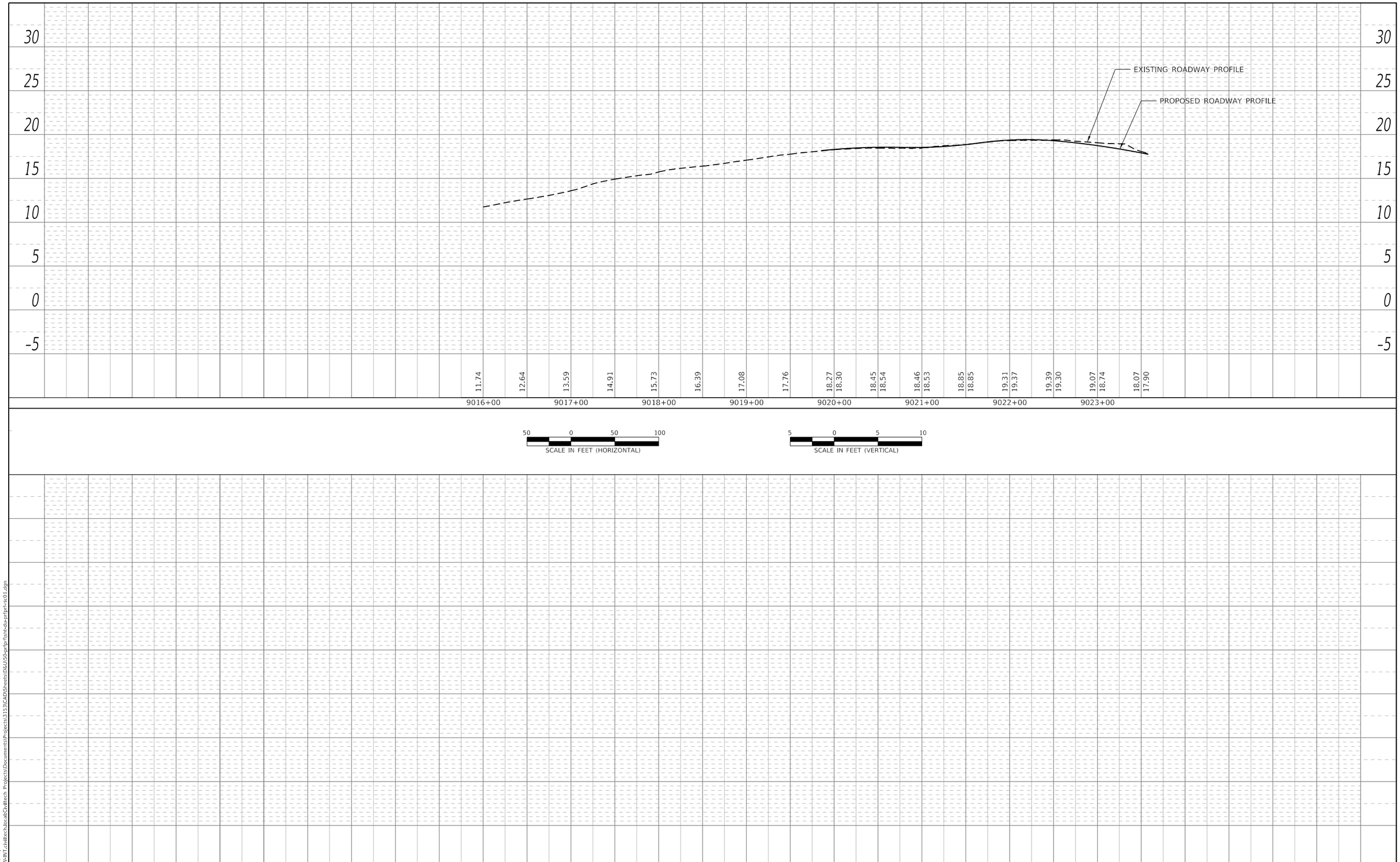


PLAN
NOTE BOOK NO.
SURVEYED
PLOTTED
ALIGNMENT CHECKED
RT. OF WAY CHECKED
CADD FILE NAME
BY
DATE

PROFILE
NOTE BOOK NO.
SURVEYED
PLOTTED
GRADES CHECKED
B.M. NOTED
STRUCTURE NOTATNS CHKD
BY
DATE

PLOT DATE: 5/17/2021
PLOT SCALE: 100.0000 ' / in.
FILE NAME: pw:\\CIVIL-PW-INT.civiltech.local:Civiltech Projects\Documents\Projects\3153\CAD\Sheets\D&U\50-prfprf\sht-du-prfprf-ric01.dgn

| | | | | | |
|---|---|---|---|---|---|
| DESIGN: | MSA | | | $REV3 | |
| DRAWN: | MSA | | | $REV2 | |
| CHECKED: | TKL | | | $REV1 | |
| APPROVED: | | NO. | BY | DATE | DESCRIPTION |
| DATE: 01/22/2021 | | REVISIONS | | | |

CDOT CHICAGO DEPARTMENT OF TRANSPORTATION

C*NECT

DRAINAGE PROFILE
RICHARDS DR.

JACKSON PARK MOBILITY IMPROVEMENTS

STA. 9016+00 TO STA. 9023+58

CONTRACT NO. -
PROJECT NO. B-7-203
SCALE: AS INDICATED

| TOTAL SHEETS | SHEET NO. |
|---|---|
| 1434 | 511 |

DRAWING NO. DRN-81

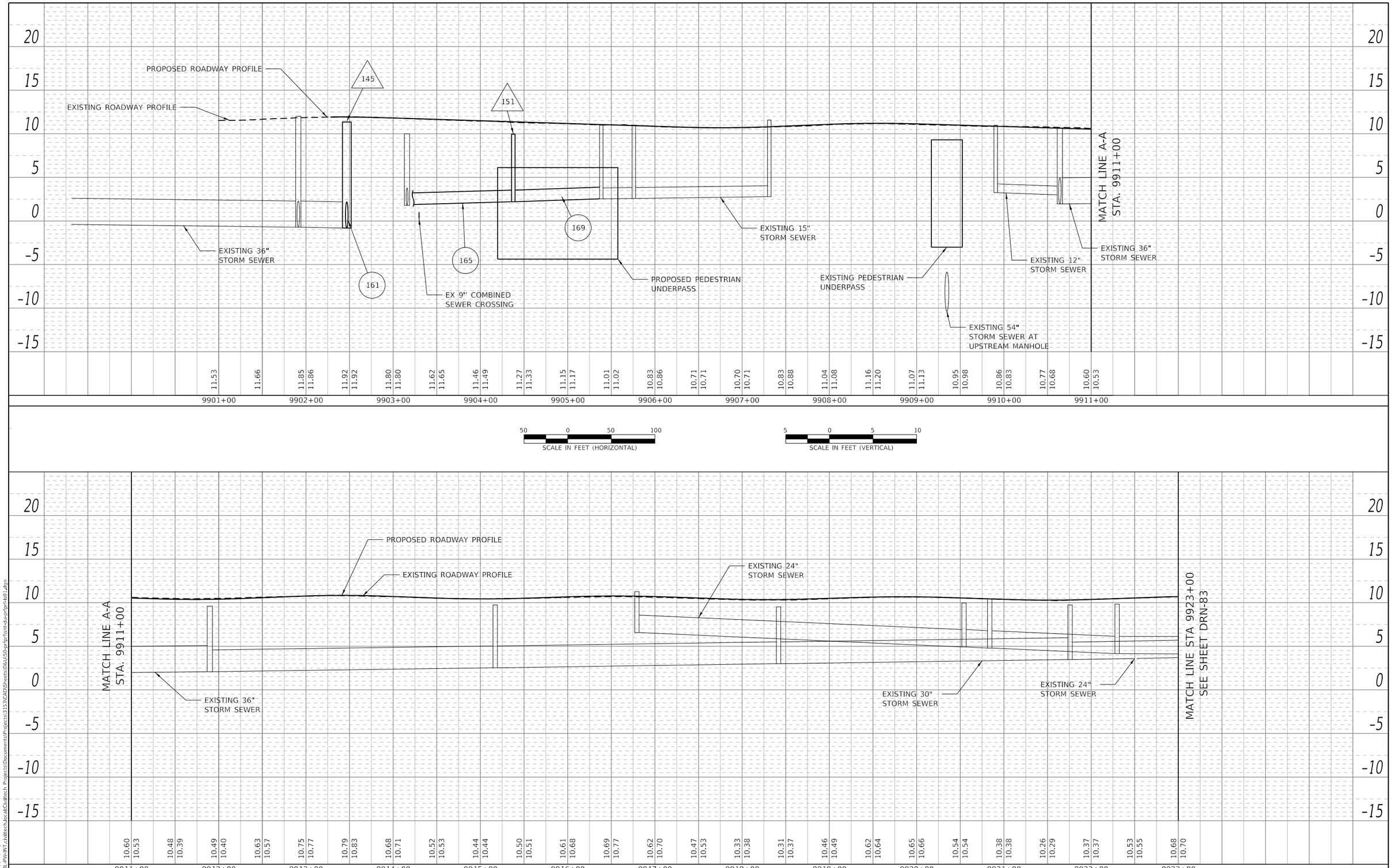


PLAN
NOTE BOOK NO.
SURVEYED
PLOTTED
ALIGNMENT CHECKED
RT. OF WAY CHECKED
CADD FILE NAME
BY
DATE

PROFILE
NOTE BOOK NO.
SURVEYED
PLOTTED
GRADES CHECKED
B.M. NOTED
STRUCTURE NOTATIONS CHKD
BY
DATE

PLOT DATE: 5/17/2021
PLOT SCALE: 100.0000 ' / in.
FILE NAME: pw:\\CIVIL-PW-INT.civiltech.local:Civiltech Projects\Documents\Projects\3153\CAD\Sheets\D&U\50-prfprf\sht-du-prfprf-ls01.dgn

| | | | | |
|---|---|---|---|---|
| DESIGN: MSA | | | SREV3 | |
| DRAWN: MSA | | | SREV2 | |
| CHECKED: TKL | | | SREV1 | |
| APPROVED: | NO. | BY | DATE | DESCRIPTION |
| DATE: 01/22/2021 | REVISIONS | | | |

CDOT CHICAGO DEPARTMENT OF TRANSPORTATION

C*NECT

**DRAINAGE PROFILE**
**LAKE SHORE DR.**

**JACKSON PARK MOBILITY IMPROVEMENTS**

STA. 9901+00 TO STA. 9923+00

CONTRACT NO. -
PROJECT NO. B-7-203
SCALE: AS INDICATED

| TOTAL SHEETS | SHEET NO. |
|---|---|
| 1434 | 512 |

DRAWING NO. **DRN-82**

PLAN

SURVEYED
PLOTTED
ALIGNMENT CHECKED
RT. OF WAY CHECKED
CADD FILE NAME

NOTE BOOK
NO.

BY | DATE

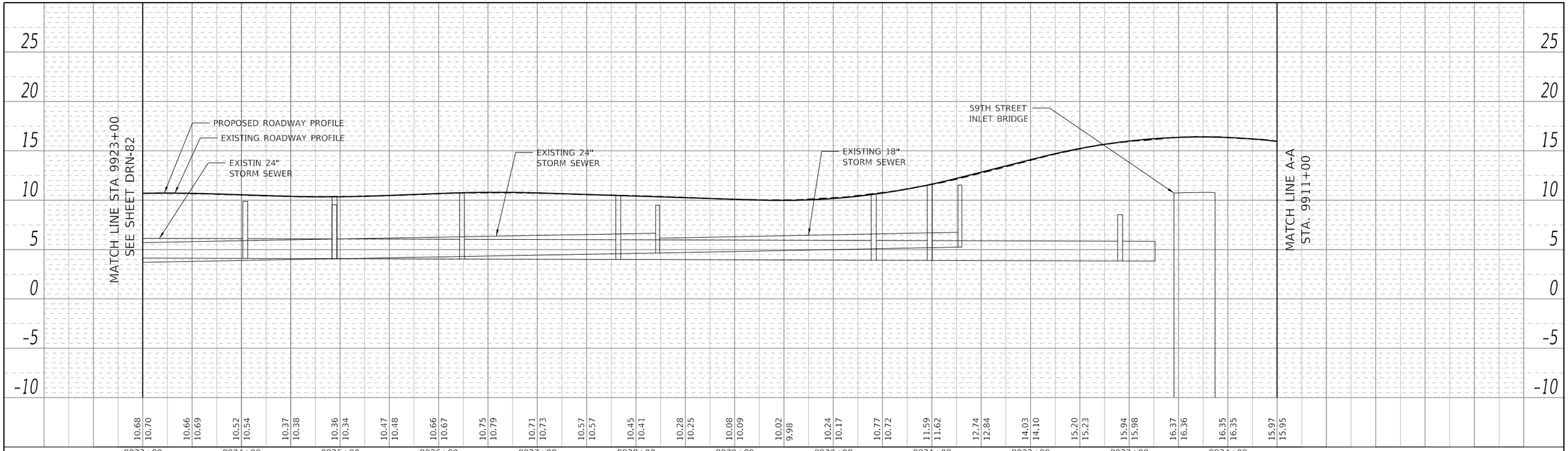


50 0 50 100
SCALE IN FEET (HORIZONTAL)

5 0 5 10
SCALE IN FEET (VERTICAL)

PROFILE

SURVEYED
PLOTTED
ALIGNMENT CHECKED
RT. OF WAY CHECKED
CADD FILE NAME

NOTE BOOK
NO.

BY | DATE

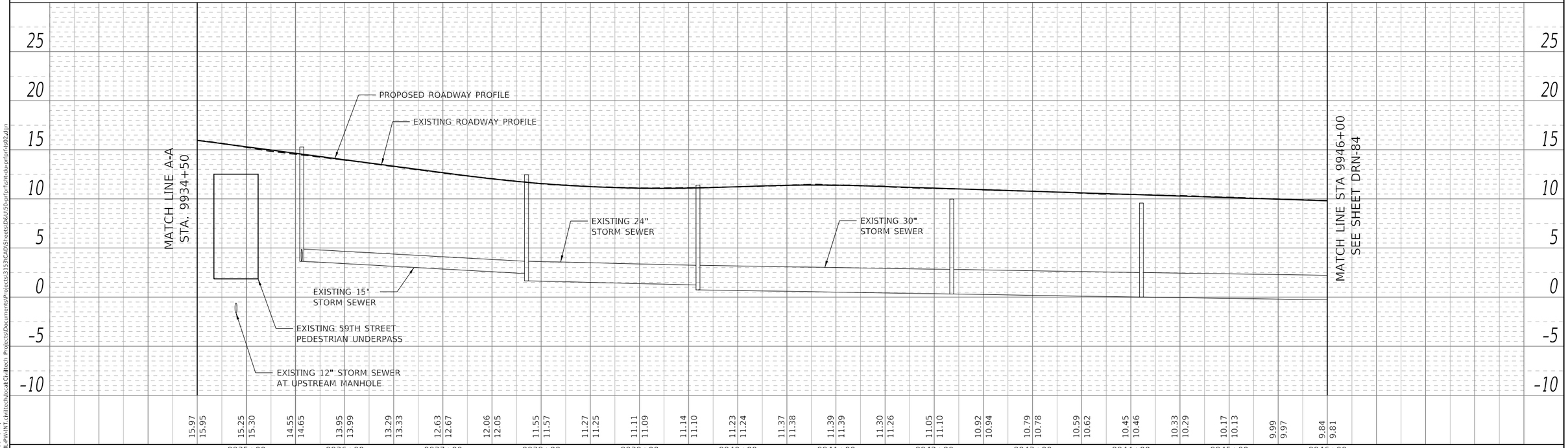


PLOT DATE= 5/17/2021
PLOT SCALE= 100.0000 ' / in.
FILE NAME: pw:\\CIVIL-PW-INT.civiltech.local\CivilTech Projects\Documents\Projects\3133\CADD\Sheets\D&U\50-prfpr1sht-da-prfpr-h602.dgn

| | | | | | |
|---|---|---|---|---|---|
| DESIGN: MSA | | | $REV3 | | |
| DRAWN: MSA | | | $REV2 | | |
| CHECKED: TKL | | | $REV1 | | |
| APPROVED: | NO. | BY | DATE | DESCRIPTION | |
| DATE: 01/22/2021 | REVISIONS | | | | |

CDOT CHICAGO DEPARTMENT OF TRANSPORTATION

C*NECT

# DRAINAGE PROFILE
# LAKE SHORE DR.

## JACKSON PARK MOBILITY IMPROVEMENTS

STA. 9923+00 TO STA. 9946+00

| | |
|---|---|
| CONTRACT NO. | - |
| PROJECT NO. | B-7-203 |
| SCALE: AS INDICATED | |

| TOTAL SHEETS | SHEET NO. |
|---|---|
| 1434 | 513 |

DRAWING NO. **DRN-83**

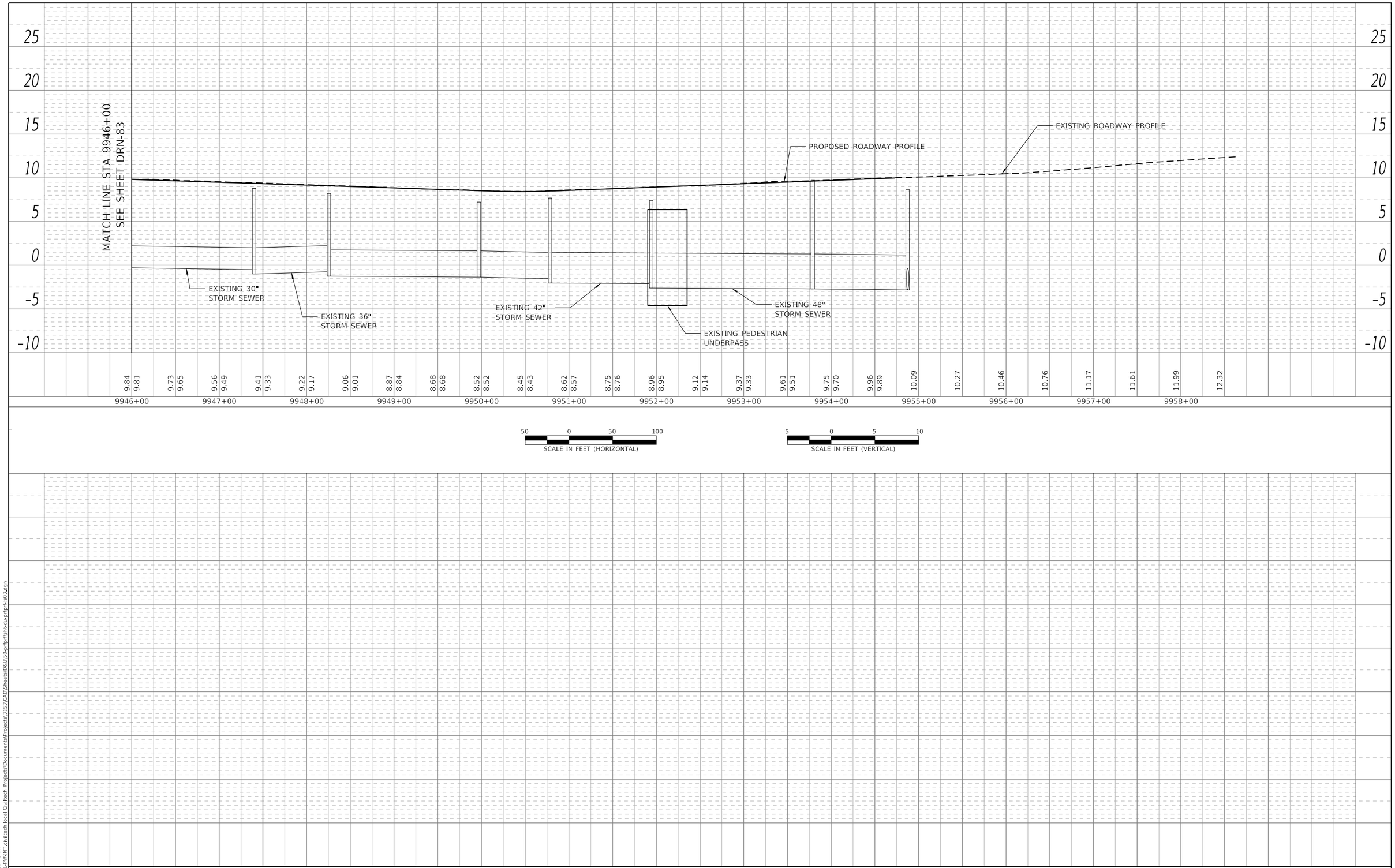


PLAN
NOTE BOOK NO.
SURVEYED
PLOTTED
ALIGNMENT CHECKED
RT. OF WAY CHECKED
CADD FILE NAME
BY
DATE

PROFILE
NOTE BOOK NO.
SURVEYED
PLOTTED
GRADES CHECKED
B.M. NOTED
STRUCTURE NOTATIONS CHKD
BY
DATE

PLOT DATE: 5/17/2021
PLOT SCALE: 100.0000 ' / in.
FILE NAME: pw:\\CIVIL-PW-INT.civiltech.local:Civiltech Projects\Documents\Projects\3153\CAD\Sheets\D&U\50-prfprf\sht-du-prfprf-ls03.dgn

| | | | | | |
|---|---|---|---|---|---|
| DESIGN: | MSA | | | $REV3 | |
| DRAWN: | MSA | | | $REV2 | |
| CHECKED: | TKL | | | $REV1 | |
| APPROVED: | | NO. | BY | DATE | DESCRIPTION |
| DATE: 01/22/2021 | | REVISIONS | | | |

CDOT CHICAGO DEPARTMENT OF TRANSPORTATION

C*NECT

DRAINAGE PROFILE
LAKE SHORE DR.

JACKSON PARK MOBILITY IMPROVEMENTS

STA. 9946+00 TO STA. 9959+00

CONTRACT NO. -
PROJECT NO. B-7-203
SCALE: AS INDICATED

| TOTAL SHEETS | SHEET NO. |
|---|---|
| 1434 | 514 |

DRAWING NO. DRN-84

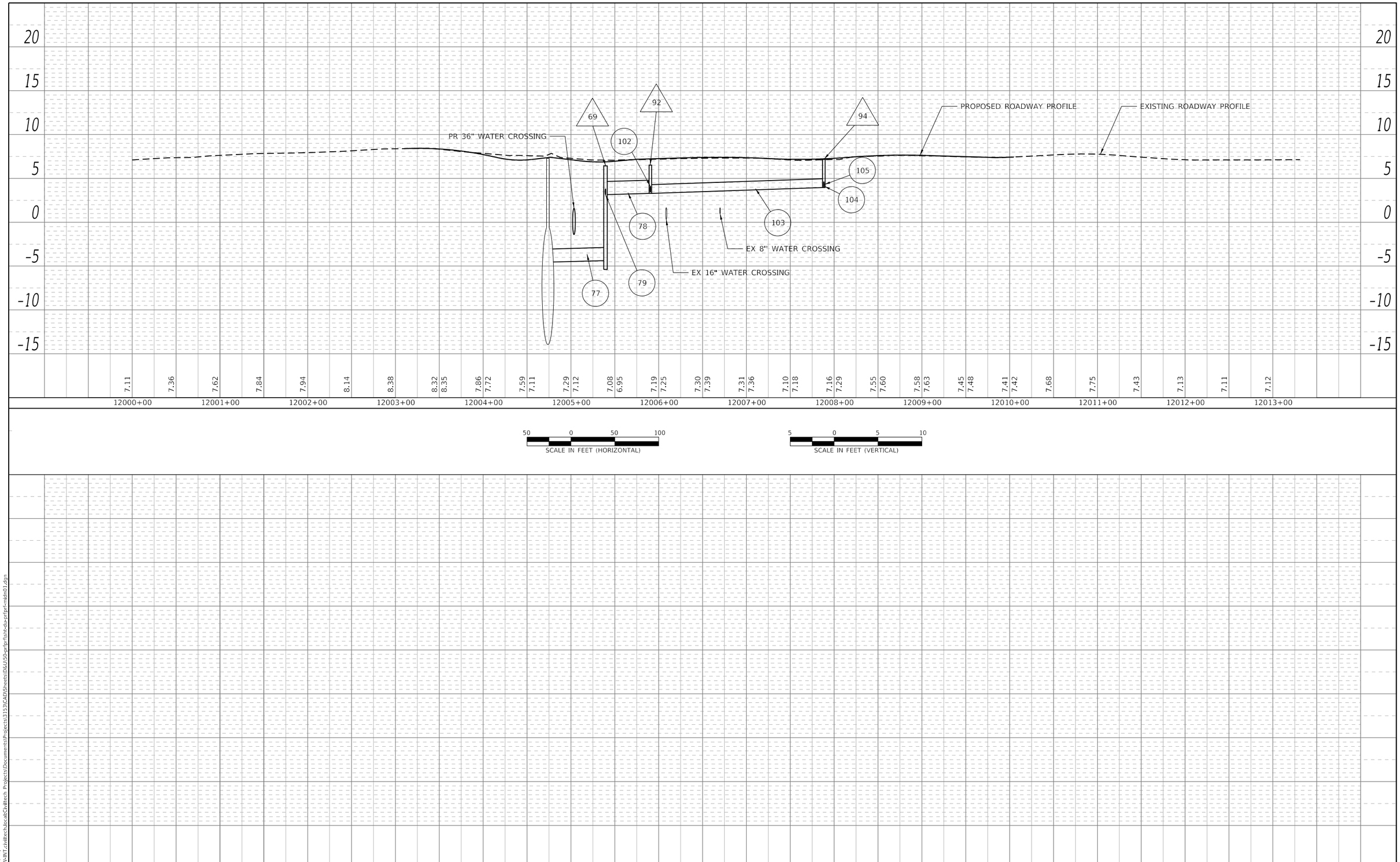


PLAN
NOTE BOOK NO.
SURVEYED
PLOTTED
ALIGNMENT CHECKED
RT. OF WAY CHECKED
CADD FILE NAME
BY
DATE

PROFILE
NOTE BOOK NO.
SURVEYED
PLOTTED
GRADES CHECKED
B.M. NOTED
STRUCTURE NOTATIONS CHKD
BY
DATE

PLOT DATE: 5/17/2021
PLOT SCALE: 100.0000 ' / in.
FILE NAME: pw:\\CIVIL-PW-INT.civiltech.local:Civiltech Projects\Documents\Projects\3153\CAD\Sheets\D&U\50-prfprf\sht-du-prfprf-midn01.dgn

| | | | | | |
|---|---|---|---|---|---|
| DESIGN: | MSA | | | $REV3 | |
| DRAWN: | MSA | | | $REV2 | |
| CHECKED: | TKL | | | $REV1 | |
| APPROVED: | | NO. | BY | DATE | DESCRIPTION |
| DATE: 01/22/2021 | | REVISIONS | | | |

CDOT CHICAGO DEPARTMENT OF TRANSPORTATION

C*NECT

DRAINAGE PROFILE
MIDWAY PLAISANCE NORTH ROADWAY

JACKSON PARK MOBILITY IMPROVEMENTS

STA. 12000+00 TO STA. 12103+31

CONTRACT NO. -
PROJECT NO. B-7-203
SCALE: AS INDICATED

| TOTAL SHEETS | SHEET NO. |
|---|---|
| 1434 | 515 |

DRAWING NO. DRN-85

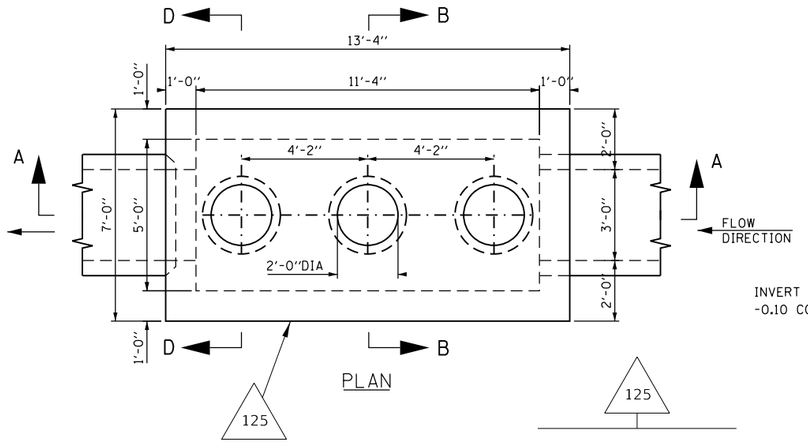


PLAN




CONCRETE WEIR STRUCTURE
STA. 5002+78.39, 96.60' LT
SEE DRN-42

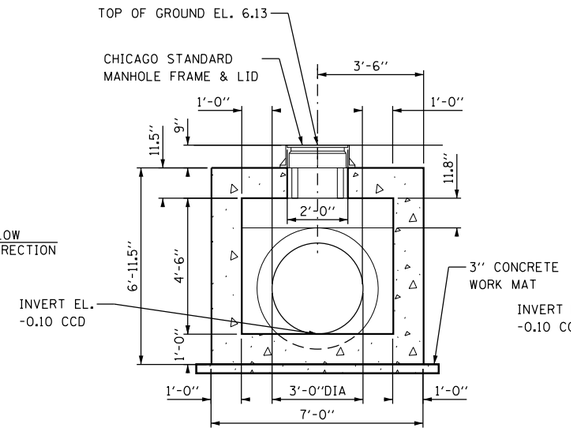


SECTION B-B

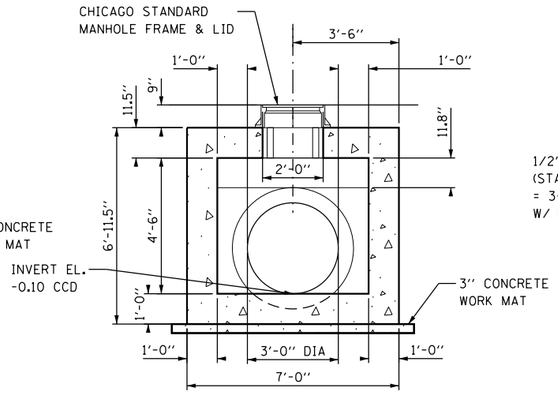


SECTION D-D

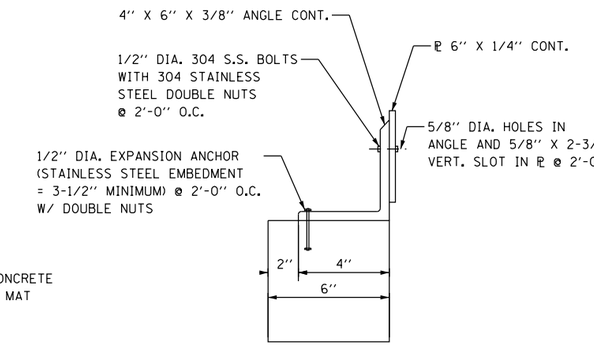


WEIR & SKIMMER PLATE

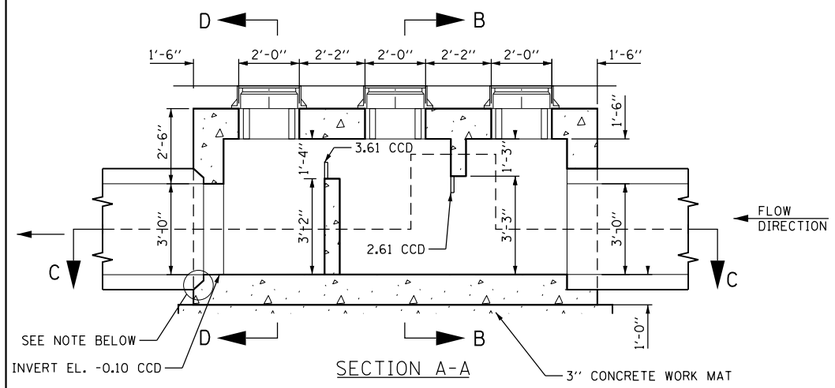


SECTION A-A

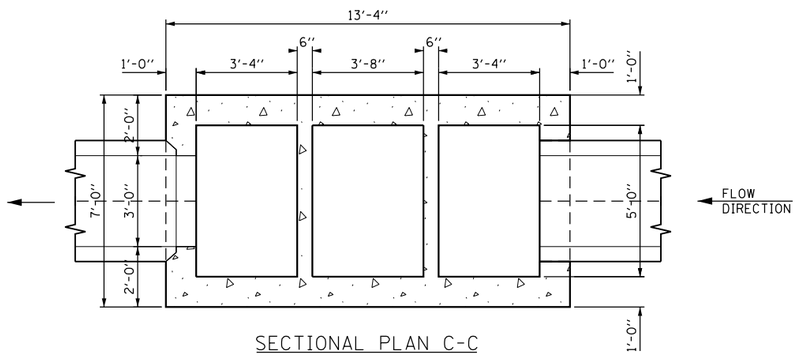


SECTIONAL PLAN C-C

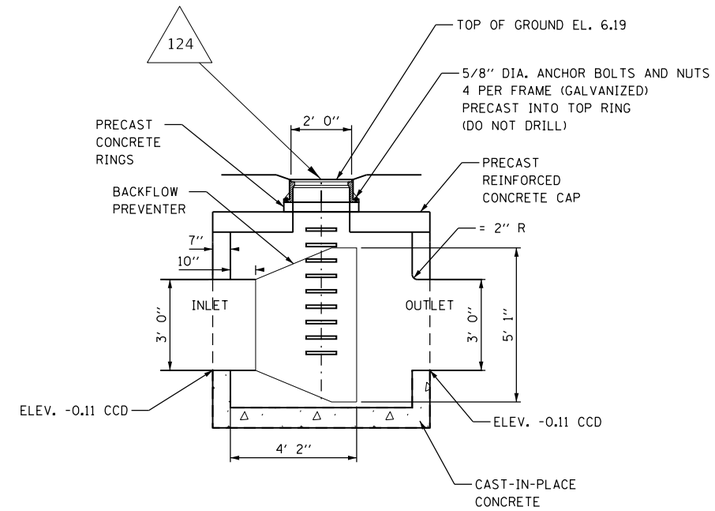


MANHOLE WITH BACKFLOW PREVENTER DETAIL
(NTS)

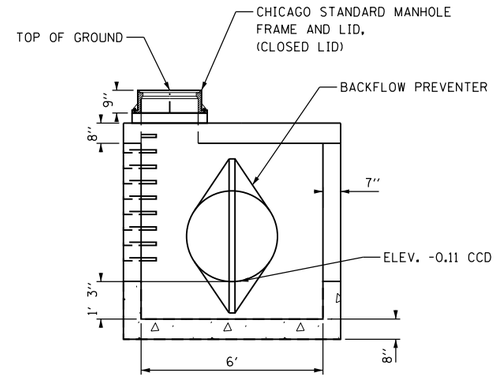


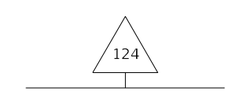


BACKFLOW PREVENTER
AND ENCLOSURE
STA. 5002+80.58, 106.96' LT
SEE DRN-42

NOTES:

COORDINATE KEY DETAILS FOR PIPE AND MANHOLE RING WITH SUPPLIER AND/OR MANUFACTURER.

1' 0 1' 2'
SCALE 1' : 1/2"

PLOT DATE: 5/17/2021
PLOT SCALE: 5.0000 ' / in.
FILE NAME: pw:\\CIVIL-PW-INT.civiltech.local:Civiltech Projects\Documents\Projects\3153\CAD\Sheets\Detail Sheets\Drainage\sht-dt-d-022.dgn

| | | | | | |
|---|---|---|---|---|---|
| DESIGN: MSA | | | | | |
| DRAWN: MSA | | | | | |
| CHECKED: TKL | | | | | |
| APPROVED: | NO. | BY | DATE | DESCRIPTION | |
| DATE: 03/26/2021 | REVISIONS | | | | |

CDOT CHICAGO DEPARTMENT OF TRANSPORTATION

C*NECT

DRAINAGE DETAIL
CONCRETE WEIR STRUCTURE
BACKFLOW PREVENTER AND ENCLOSURE

JACKSON PARK MOBILITY IMPROVEMENTS

STA. TO STA.

| | | |
|---|---|---|
| CONTRACT NO. - | TOTAL SHEETS 1434 | SHEET NO. 516 |
| PROJECT NO. B-7-203 | DRAWING NO. DD-1 | |
| SCALE: NONE | | |

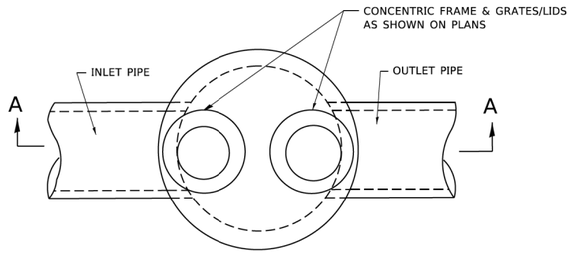


## PLAN

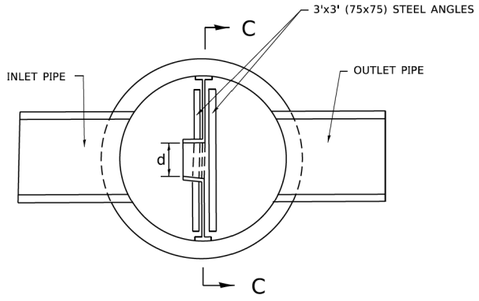


## SECTION B–B

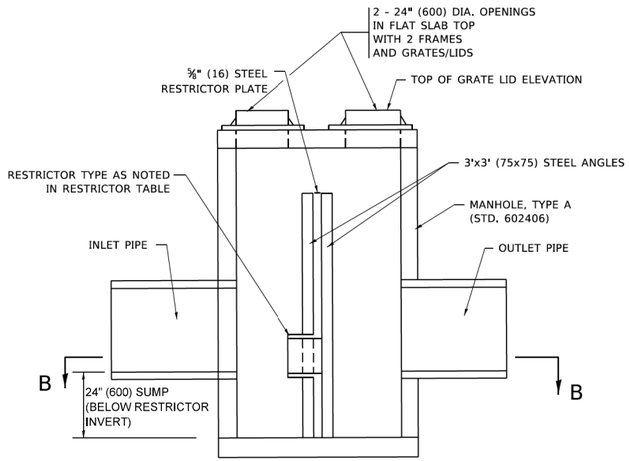


## SECTION A–A

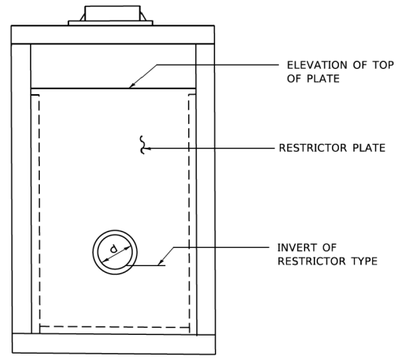


## SECTION C–C

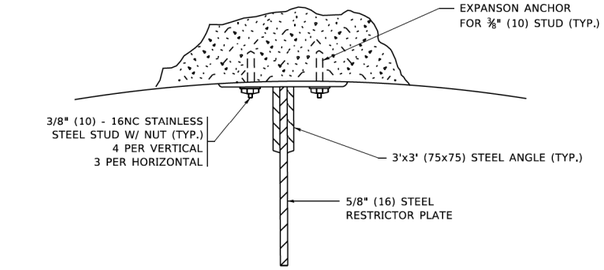


## ANGLE FASTENER DETAIL

NOTES:

1. ALL STEEL ANGLES AND PLATES TO BE GALVANIZED AFTER FABRICATION.
2. ALL RESTRICTOR PLATES, ANGLES AND HARDWARE TO BE INCLUDED IN THE COST OF THE MANHOLE.
3. BASIS OF PAYMENT: "MANHOLES ,TYPE A, 6 FT, (1.8 m)-DIAMETER, TYPE 1 FRAME, CLOSED LID, RESTRICTOR PLATE" EACH

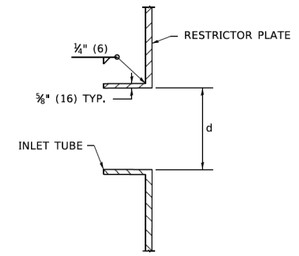


## INLET TUBE DETAIL

| STATION | MANHOLE DIAMETER | FRAME AND GRATE | RESTRICTOR TYPE | INSIDE RESTRICTOR TYPE DIAMETER in. (mm) (d) | INVERT OF RESTRICTOR TYPE | ELEVATION OF TOP OF PLATE OVERFLOW |
|---|---|---|---|---|---|---|
| 5001+67 | 6' | T1F CL | Sharp Edged | 4 | -5.94 | 4.61 |
| STRUCTURE 128 | | | | | | |
| ON DRN-43 | | | | | | |
| | | | | | | |
| | | | | | | |
| | | | | | | |
| | | | | | | |
| | | | | | | |
| | | | | | | |
| | | | | | | |
| | | | | | | |

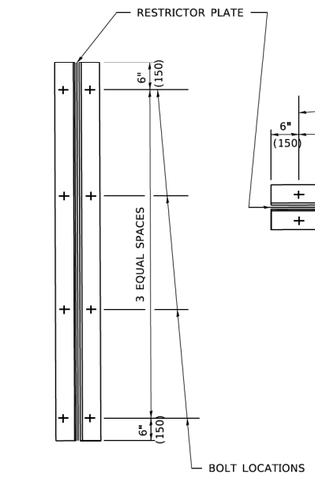


TYPICAL VERTICAL ANGLES
LOOKING TOWARD MANHOLE WALL

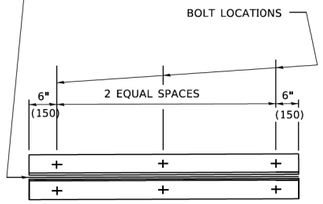


TYPICAL HORIZONTAL
ANGLES LOOKING TOWARD
BOTTOM OF MANHOLE

TOTAL BOLTS REQUIRED: 22

**NOTE:**

1. ANGLES SHOULD BE 3x3x 3/8 (75x75x75)
2. VERTICAL ANGLES SHOULD EXTEND FROM THE BOTTOM OF THE RESTRICTOR PLATE TO THE TOP.
3. HORIZONTAL ANGLES SHOULD EXTEND FROM VERTICAL ANGLE TO VERTICAL ANGLE.

## STEEL ANGLE BOLTING DETAILS

| RESTRICTOR TYPE | | | | | |
|---|---|---|---|---|---|
| 1 | 2 | 3 | 4 | 5 | 6 |
| RE-ENTRANT TUBE | SHARP EDGED | SQUARE EDGED | RE-ENTRANT TUBE | SQUARE EDGED | ROUNDED |
| LENGTH: ½ TO 1 DIA. | | STREAM CLEARS SIDES | LENGTH: 2-½ DIA. | LENGTH: 2-½ DIA. | |
| C=.52 | C=.61 | C=.61 | C=.73 | C=.82 | C=.98 |

VALUES OF "C" FOR CIRCULAR
AND SQUARE ORIFICES

ALL DIMENSIONS ARE IN INCHES (MILLIMETERS) UNLESS OTHERWISE SHOWN.

| | | | | |
|---|---|---|---|---|
| DESIGN: MSA | | | | |
| DRAWN: MSA | | | | |
| CHECKED: TKL | | | | |
| APPROVED: | NO. | BY | DATE | DESCRIPTION |
| DATE: 01/22/2021 | REVISIONS | | | |

CHICAGO DEPARTMENT OF TRANSPORTATION

C²NECT

DRAINAGE DETAIL
MANHOLE WITH RESTRICTOR PLATE

JACKSON PARK MOBILITY IMPROVEMENTS

STA. TO STA.

| | | | |
|---|---|---|---|
| CONTRACT NO. - | | TOTAL SHEETS | SHEET NO. |
| PROJECT NO. B-7-203 | | 1434 | 517 |
| SCALE: NONE | | DRAWING NO. DD-2 | |

PLOT DATE: 5/17/2021
PLOT SCALE: 3.0000 ' / in.
FILE NAME: pw:\\CTVL-PWINT.ctvltech.local:CivilTech Projects\Documents\Projects\3133\CADD\Sheets\Detail Sheets\Drainage\tht-dtl-d23.dgn

## 1 DRN-1 CONNECTION DETAIL 1
STA. 226+74

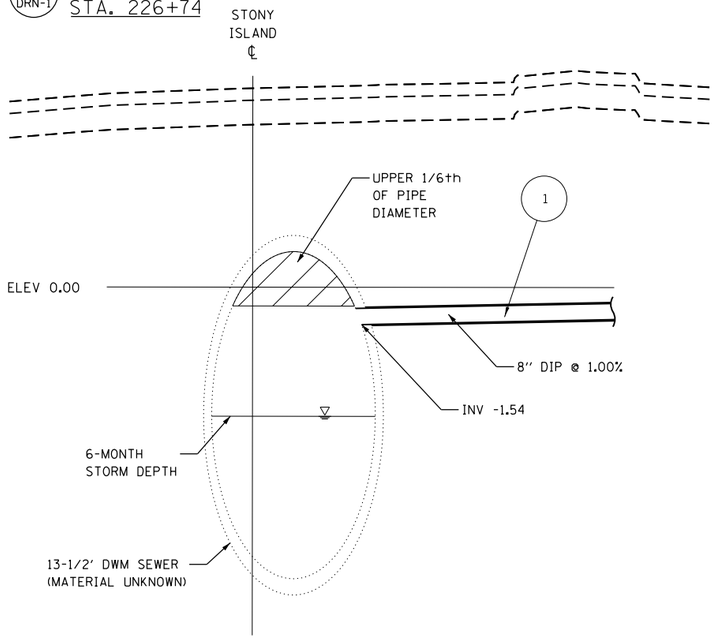


## 2 DRN-2 CONNECTION DETAIL 2
STA. 222+64

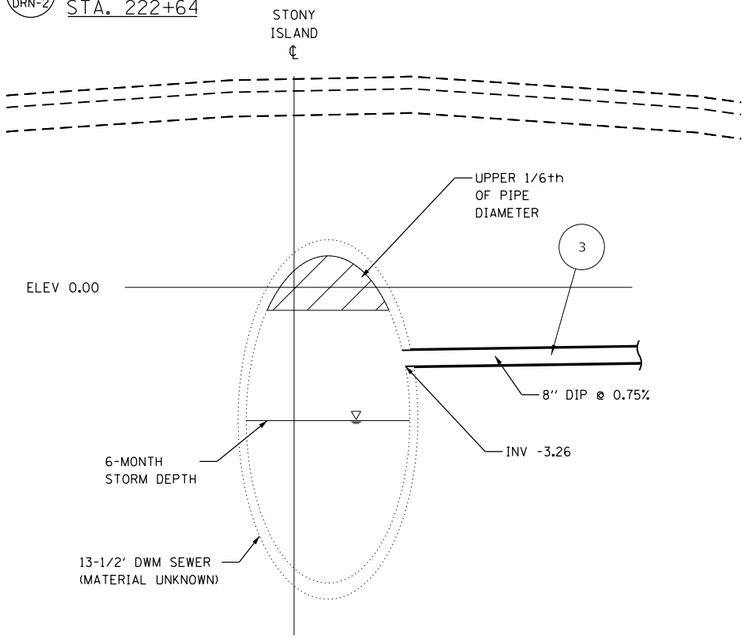


## 3 DRN-3 CONNECTION DETAIL 3
STA. 226+74

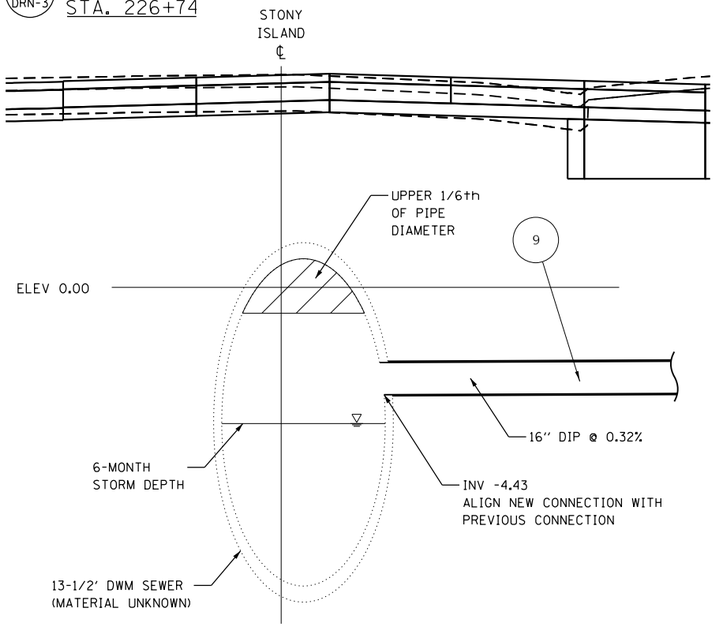


## 4 DRN-5 CONNECTION DETAIL 4
STA. 232+61

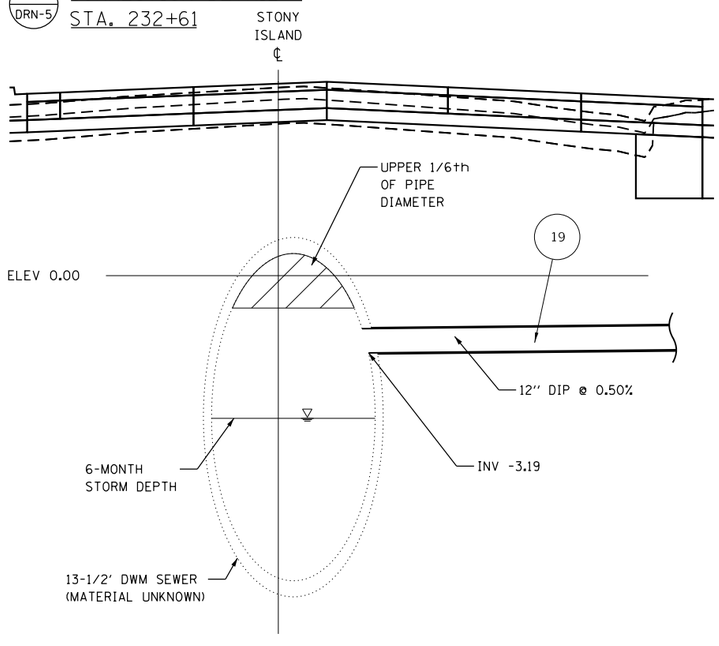


## 5 DRN-5 CONNECTION DETAIL 5
STA. 233+26

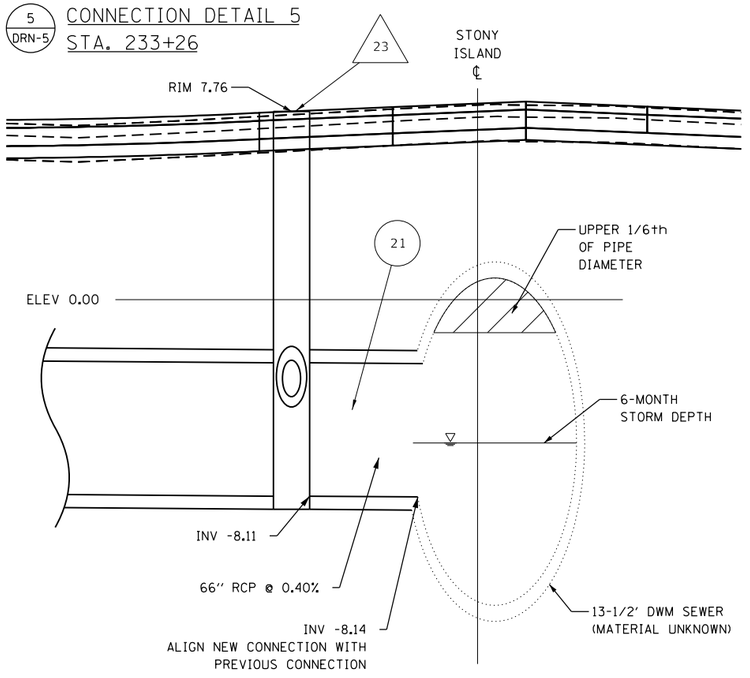


## 6 DRN-9 CONNECTION DETAIL 6
STA. 241+49

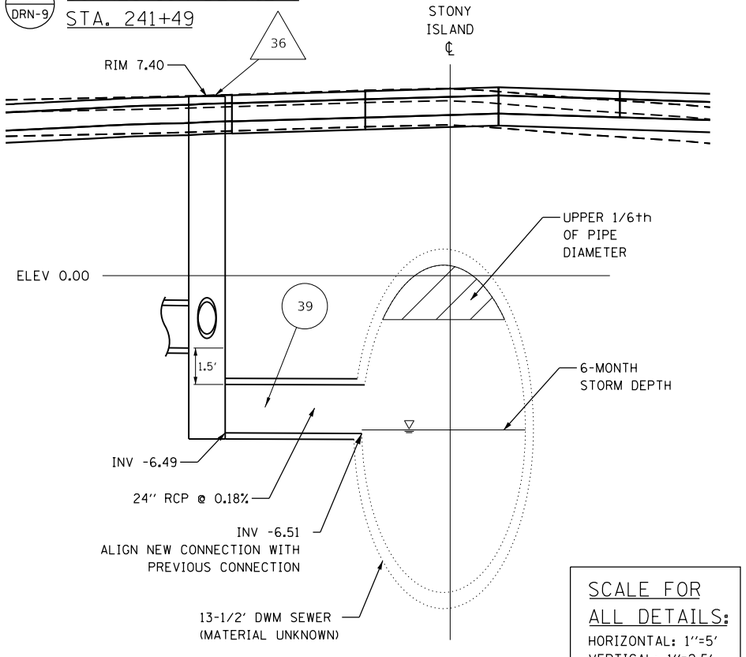


SCALE FOR ALL DETAILS:
HORIZONTAL: 1"=5'
VERTICAL: 1"=2.5'

PLOT DATE: 5/17/2021
PLOT SCALE: 5.0000 ' / in.
FILE NAME: pw:\\CVIL-PW-NT.cdot.tech.local:CivilTech Projects:Documents:Projects:3153:CADD:Sheets:Detail Sheets:Drainage:sht-dt1-d024.dgn

| | | | | | |
|---|---|---|---|---|---|
| DESIGN: EML | | | | | |
| DRAWN: EML | | | | | |
| CHECKED: TKL | | | | | |
| APPROVED: | NO. | BY | DATE | DESCRIPTION | |
| DATE: 03/26/2021 | REVISIONS | | | | |

CHICAGO DEPARTMENT OF TRANSPORTATION

C*NECT

**DRAINAGE DETAIL**
**STONY ISLAND INTERCEPTOR SEWER**
**CONNECTION DETAILS**

**JACKSON PARK MOBILITY IMPROVEMENTS**

STA. TO STA.

| | |
|---|---|
| CONTRACT NO. | - |
| PROJECT NO. | B-7-203 |
| SCALE: AS INDICATED | |

| TOTAL SHEETS | SHEET NO. |
|---|---|
| 1434 | 518 |

DRAWING NO. **DD-3**

7 DRN-9 CONNECTION DETAIL 7
STA. 244+91

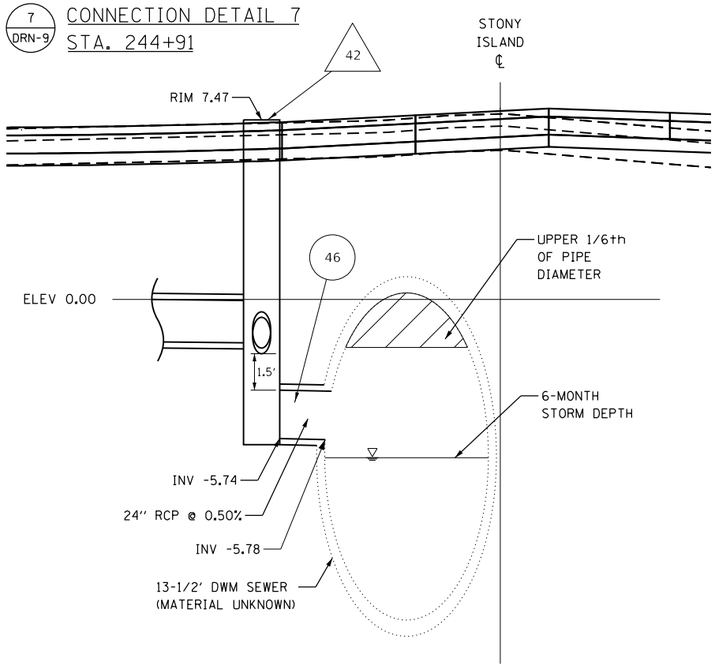


8 DRN-11 CONNECTION DETAIL 8
STA. 249+78

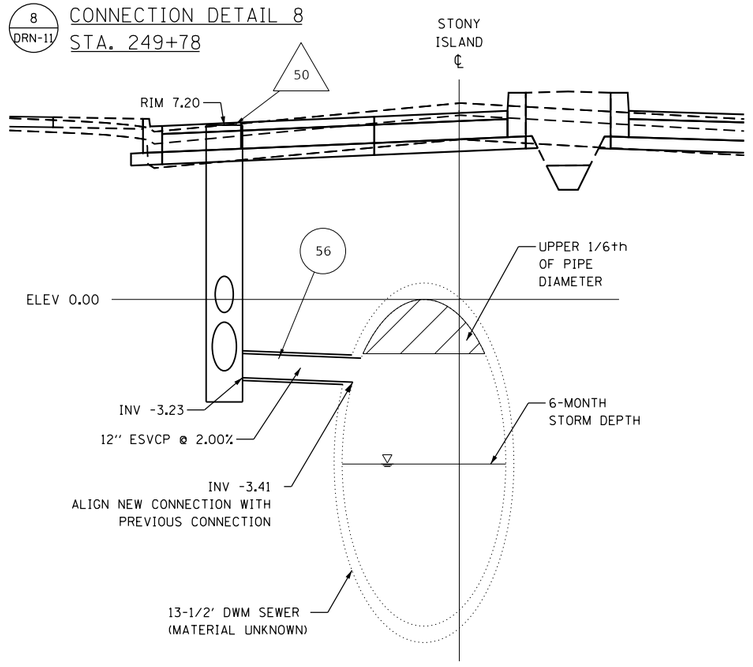


9 DRN-13 CONNECTION DETAIL 9
STA. 253+45

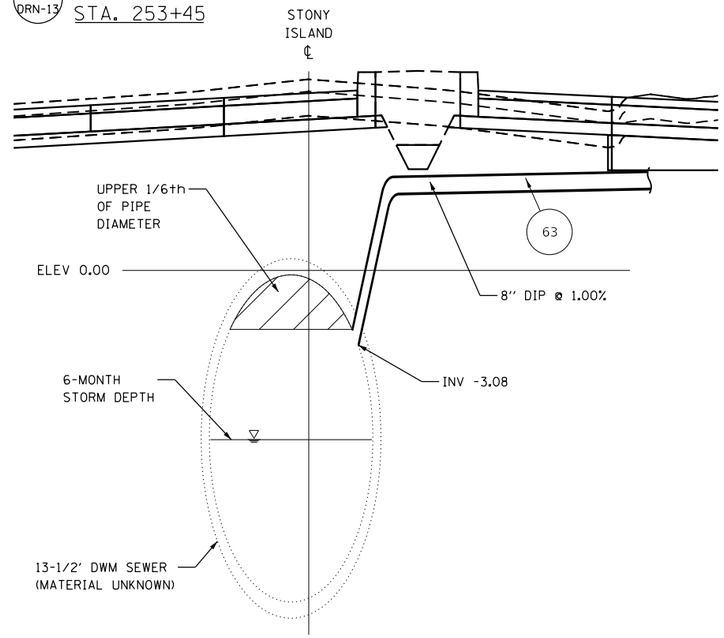


10 DRN-13 CONNECTION DETAIL 10
STA. 254+46

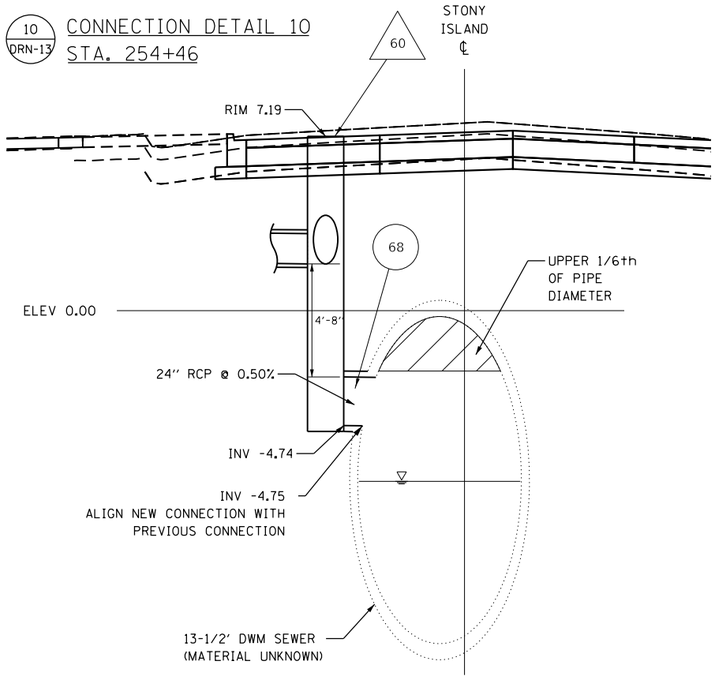


11 DRN-13 CONNECTION DETAIL 11
STA. 254+58

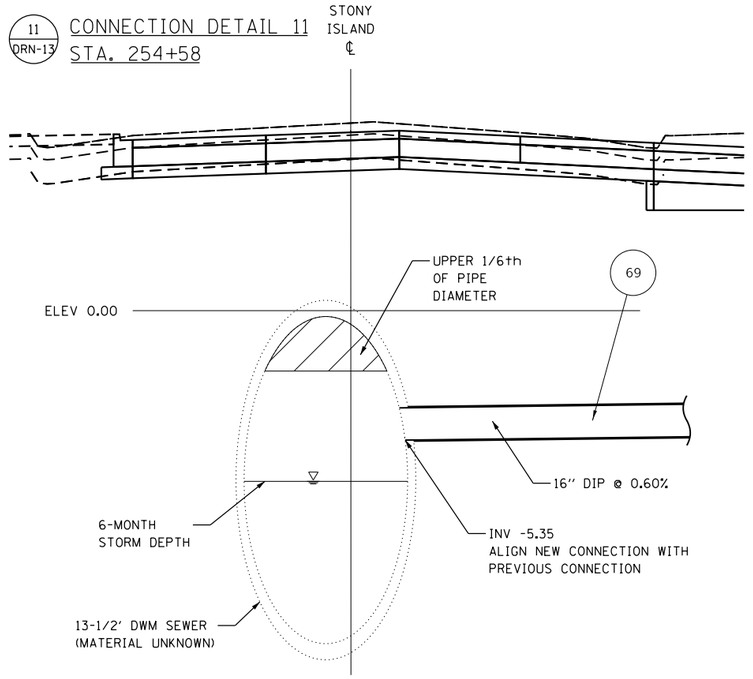


12 DRN-13 CONNECTION DETAIL 12
STA. 255+47

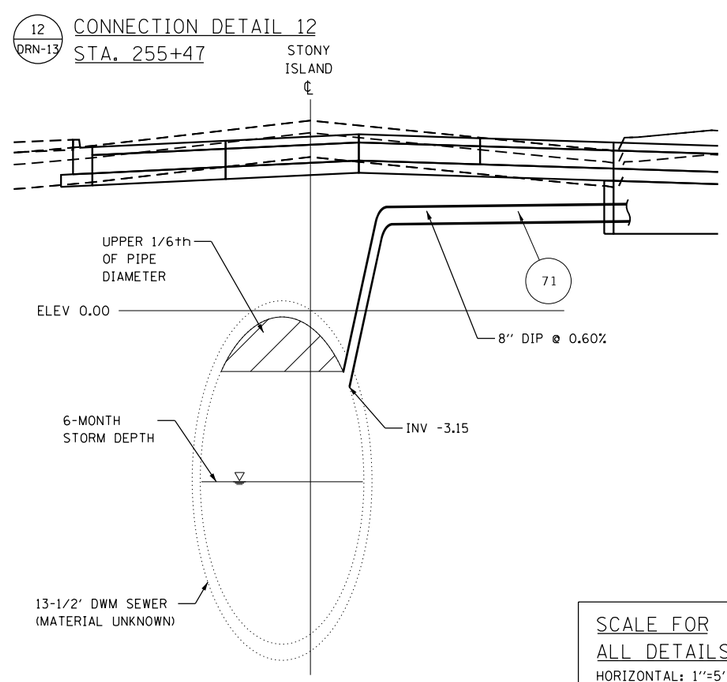


SCALE FOR ALL DETAILS:
HORIZONTAL: 1"=5'
VERTICAL: 1"=2.5'

PLOT DATE: 5/17/2021
PLOT SCALE: 5.0000 ' / in.
FILE NAME: pw:\\CIVIL-PW-INT.civiltech.local:Civiltech Projects\Documents\Projects\3153\CAD\Sheets\Detail Sheets\Drainage\sht-dtl-d-025.dgn

| | | | | | |
|---|---|---|---|---|---|
| DESIGN: EML | | | | | |
| DRAWN: EML | | | | | |
| CHECKED: TKL | | | | | |
| APPROVED: | NO. | BY | DATE | DESCRIPTION | |
| DATE: 01/22/2021 | REVISIONS | | | | |

CDOT CHICAGO DEPARTMENT OF TRANSPORTATION

C*NECT

DRAINAGE DETAIL
STONY ISLAND INTERCEPTOR SEWER
CONNECTION DETAILS

JACKSON PARK MOBILITY IMPROVEMENTS

STA. TO STA.

CONTRACT NO. -
PROJECT NO. B-7-203
SCALE: AS INDICATED

TOTAL SHEETS 1434
SHEET NO. 519
DRAWING NO. DD-4

## 13 DRN-15 CONNECTION DETAIL 13
STA. 258+55

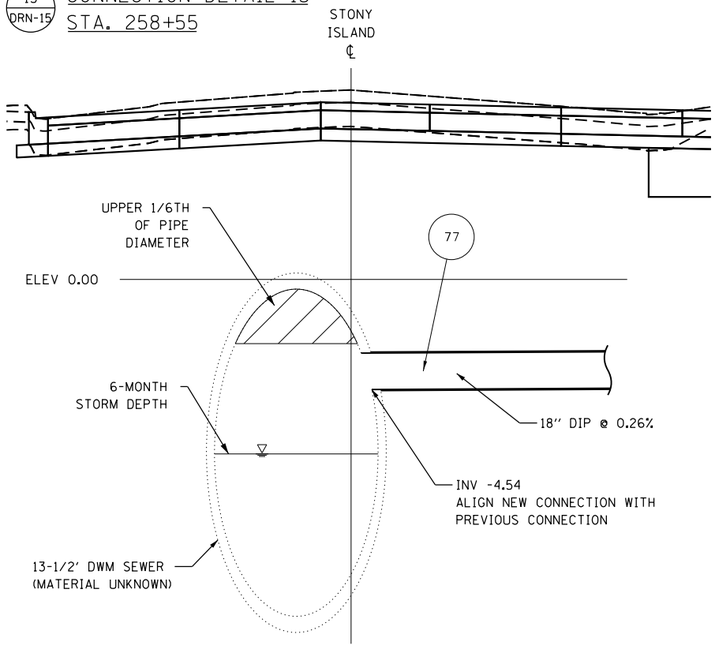


## 14 DRN-15 CONNECTION DETAIL 14
STA. 259+76

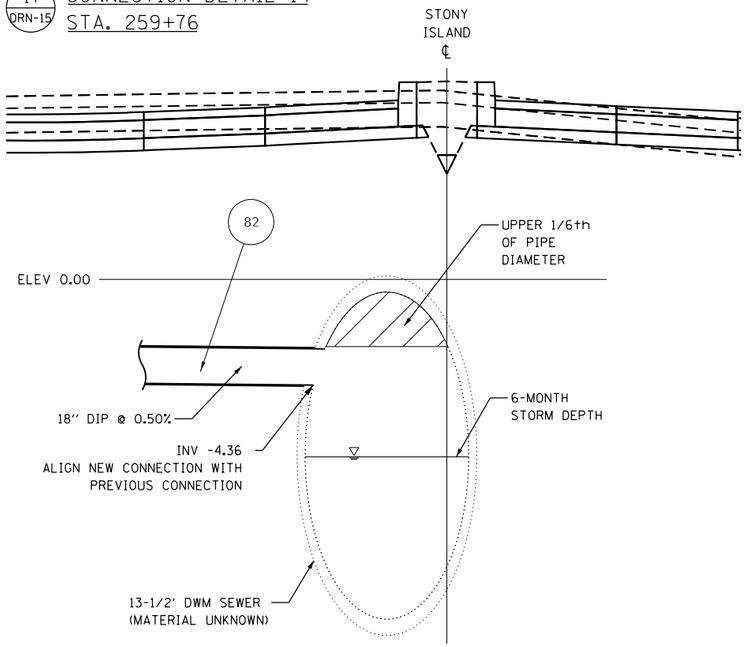


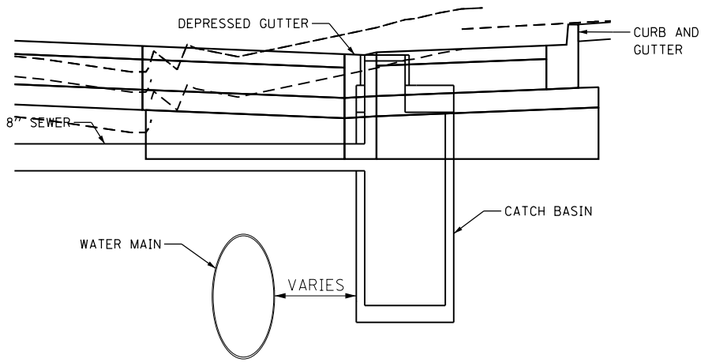


A ROTATED CATCH BASIN IN DEPRESSED GUTTER DETAIL
NTS

## 15 DRN-15 CONNECTION DETAIL 15
STA. 260+27

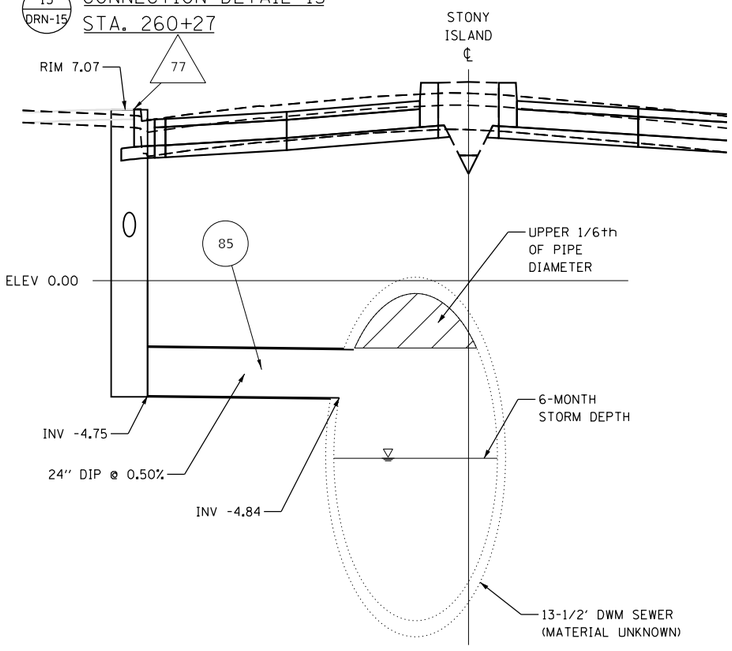


## 16 DRN-15 CONNECTION DETAIL 16
STA. 260+33

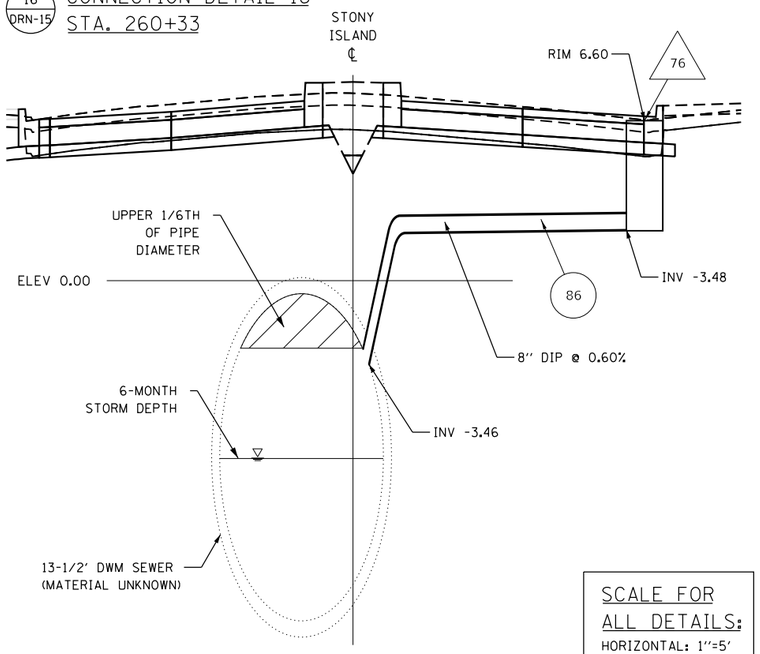


SCALE FOR ALL DETAILS:
HORIZONTAL: 1"=5'
VERTICAL: 1"=2.5'

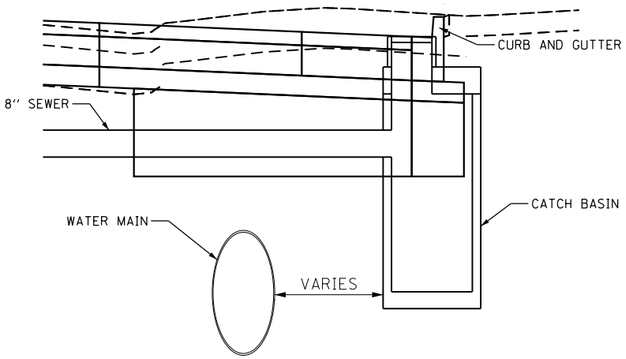


B ROTATED CATCH BASIN IN CURB AND GUTTER DETAIL
NTS

PLOT DATE: 5/17/2021
PLOT SCALE: 5.0000 ' / in.
FILE NAME: pw:\\CVIL-PW-NT-04.ckltech.local:CkltechProjects\Documents\Projects\31537CADDSheets\Detail Sheets\Drainage\sht-dt1-d26.dgn

| | | | | | |
|---|---|---|---|---|---|
| DESIGN: EML | | | | | |
| DRAWN: EML | | | | | |
| CHECKED: TKL | | | | | |
| APPROVED: | NO. | BY | DATE | DESCRIPTION | |
| DATE: 01/22/2021 | REVISIONS | | | | |

CDOT CHICAGO DEPARTMENT OF TRANSPORTATION

C*NECT

**DRAINAGE DETAIL**
**STONY ISLAND INTERCEPTOR SEWER**
**CONNECTION DETAILS**

**JACKSON PARK MOBILITY IMPROVEMENTS**

STA. TO STA.

| | | | |
|---|---|---|---|
| CONTRACT NO. - | | TOTAL SHEETS 1434 | SHEET NO. 520 |
| PROJECT NO. B-7-203 | | DRAWING NO. DD-5 | |
| SCALE: AS INDICATED | | | |

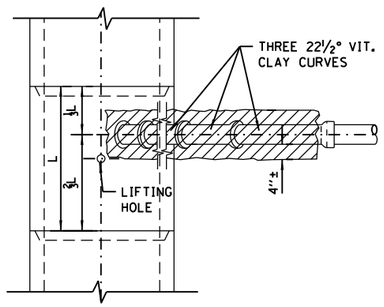


PLAN

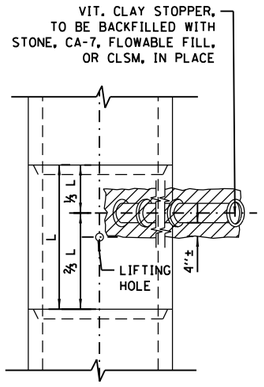


PLAN

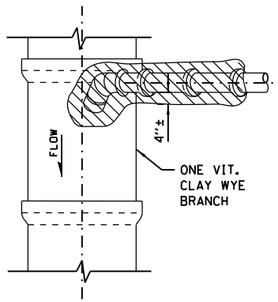


PLAN

NOTE:
PLUG TO BE COATED WITH MORTAR AND DRIVEN INTO PLACE WITH A WOODEN MALLET AND THEN SEALED WITH MORTAR.

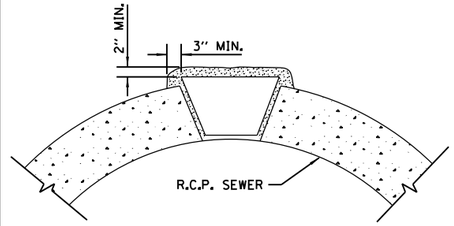


## LIFTING HOLE PLUG DETAIL FOR CONCRETE PIPE

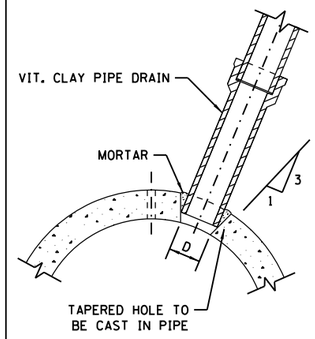


| SIZE OF DRAIN | "D" |
|---|---|
| 6" | 6⅞" |
| 8" | 9⅛" |
| 10" | 11⅛" |
| 12" | 13½" |
| 15" | 17" |
| 18" | 20¼" |
| 21" | 23⅞" |

## DETAIL OF TAPERED HOLE

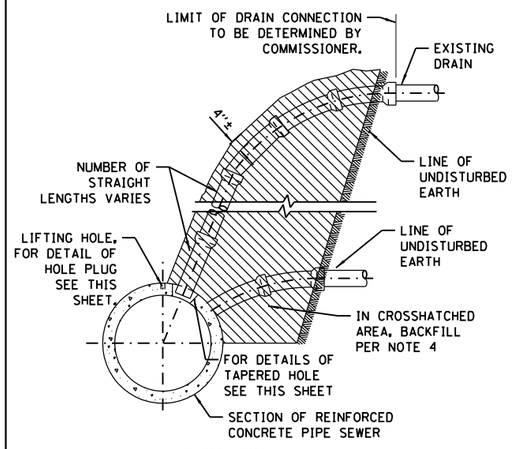


ELEVATION

## TYPICAL DRAIN CONNECTIONS FOR EXISTING DRAINS

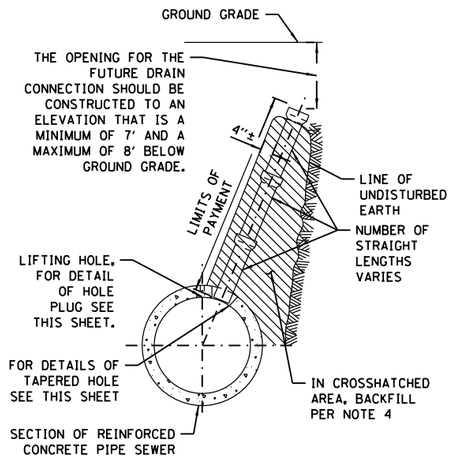


ELEVATION

## TYPICAL DRAIN STACKS FOR FUTURE USE

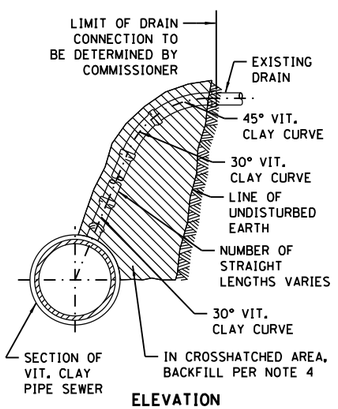


ELEVATION

## TYPICAL DRAIN CONNECTIONS FOR EXISTING DRAINS

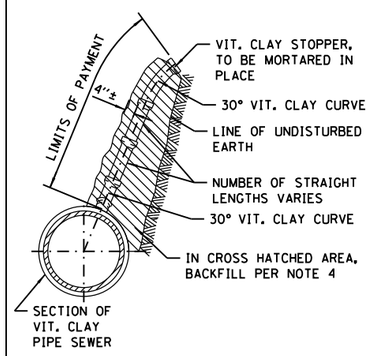


ELEVATION

## TYPICAL DRAIN STACKS FOR FUTURE USE

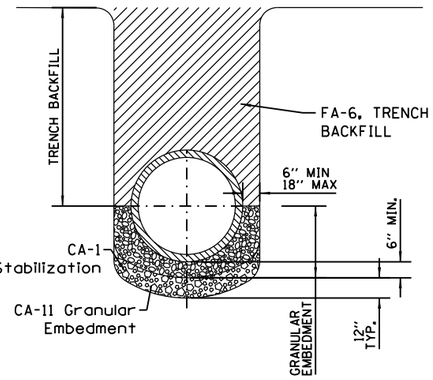


NOTE:
1. FOR TRENCH BACKFILL, USE FA-6 SAND, CRUSHED CONCRETE SAND OR STONE SAND.

2. FOR GRANULAR EMBEDMENT, USE CA-11, CRUSHED GRAVEL, CRUSHED STONE, OR CRUSHED CONCRETE.

3. 12" OF CA-1 STONE IS ONLY REQUIRED WHEN UNSTABLE MATERIAL IS ENCOUNTERED AT TRENCH BOTTOM.

## SEWER TRENCH DETAIL

NOTES:

1. ALL DRAIN CONNECTION JOINTS MUST BE MADE AS SPECIFIED IN SPECIFICATIONS..
2. FOR DUCTILE IRON PIPE DRAIN CONNECTIONS SEE SHEET NO. A.2.
3. FOR ALL GRANULAR EMBANKMENT, USE CA-7 OR CA-11
4. FOR BACKFILL OF HATCHED SUPPORT AREAS, USE CONCRETE. CA-11, FLOWABLE FILL, OR CLSM.

| STANDARD REVISIONS | |
|---|---|
| DATE | DESCRIPTION |
| 2/24/15 | APPROVED PLAN |
| | |
| | |
| | |
| | |

| PERCENT COMPLETE | DATE |
|---|---|
| 30 | |
| 60 | |
| 75 | |
| 90 | |
| 100 | |
| BULLETIN | |

**CITY OF CHICAGO**
DEPARTMENT OF WATER MANAGEMENT
BUREAU OF ENGINEERING SERVICES

VITRIFIED CLAY PIPE DRAIN CONNECTIONS

DRAWN: SBW
DESIGNED:
CHECKED: GD, GC, SO
REVIEWED:

A.1

OF

PN

| | | | | |
|---|---|---|---|---|
| DESIGN: MSA | | | | |
| DRAWN: MSA | | | | |
| CHECKED: TKL | | | | |
| APPROVED: | NO. | BY | DATE | DESCRIPTION |
| DATE: 01/22/2021 | REVISIONS | | | |

CDOT CHICAGO DEPARTMENT OF TRANSPORTATION

C²NECT

DRAINAGE DETAIL
DWM STANDARD DRAWING

JACKSON PARK MOBILITY IMPROVEMENTS

STA. TO STA.

| | |
|---|---|
| CONTRACT NO. | - |
| PROJECT NO. | B-7-203 |
| SCALE: | |
| TOTAL SHEETS | 1434 |
| SHEET NO. | 521 |
| DRAWING NO. | DD-6 |

PLOT DATE: 5/17/2021
PLOT SCALE: 40.0000 ' / in.
FILE NAME: pw:\\CIVIL-PW-INT.cdot.tech.local:CivilTech Projects\Documents\Projects\3133\CADDSheets\Detail Sheets\DrainageDist-dtl-200.dgn

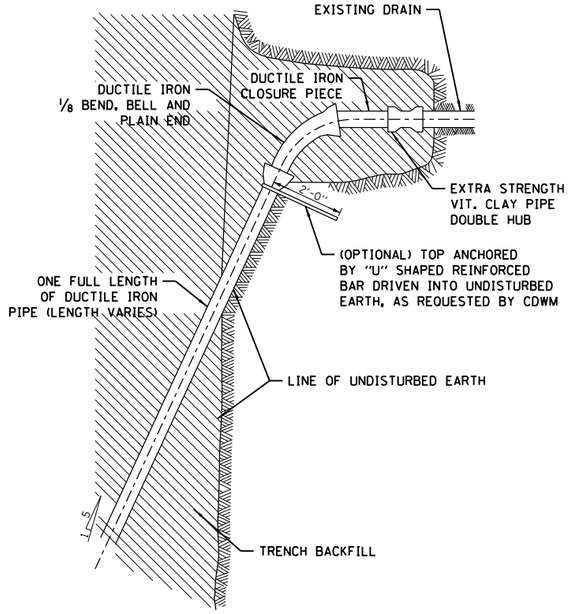


TYPICAL DRAIN CONNECTIONS FOR EXISTING DRAINS

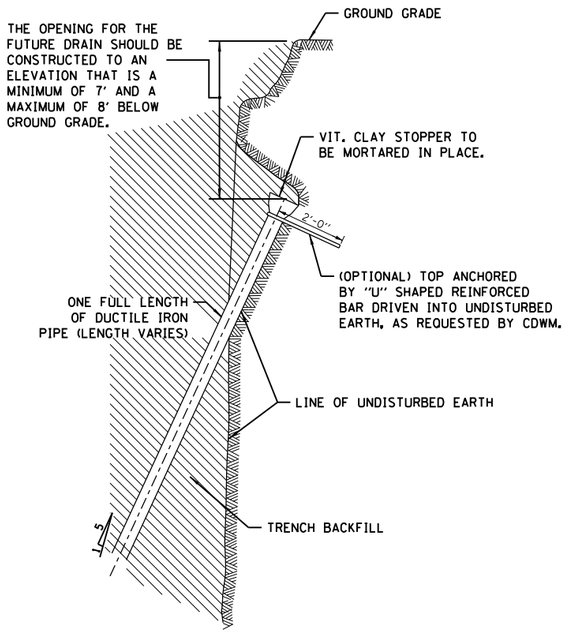


TYPICAL DRAIN STACKS FOR FUTURE USE

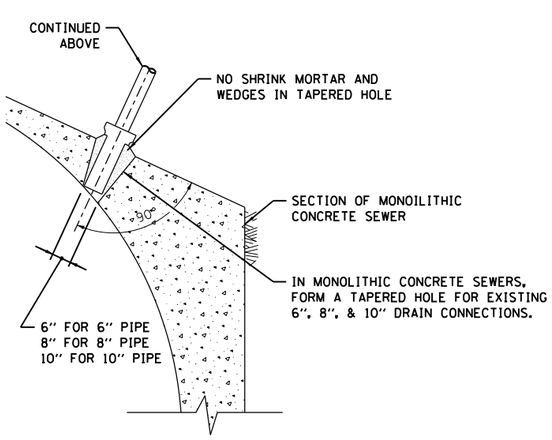


FOR MONOLITHIC CONCRETE SEWERS

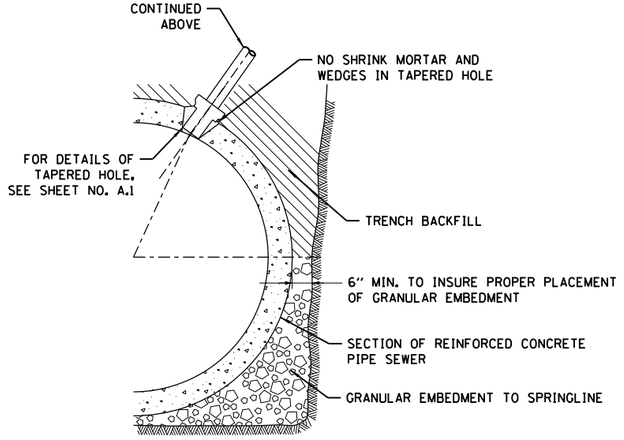


FOR REINFORCED CONCRETE PIPE SEWERS

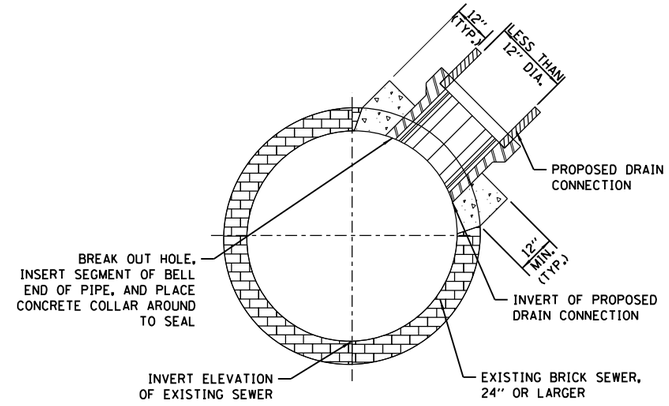


(NOT TO SCALE)

FOR BRICK SEWERS

# DUCTILE IRON PIPE DRAIN CONNECTIONS

NOTES:
1. DUCTILE IRON PIPE MUST BE BELL END WITH PUSH-ON JOINTS CONFORMING TO ANSI SPECIFICATIONS A21.51 WITH CLASS 52 THICKNESS.
2. CONNECTIONS AND STACKS SHOWN MUST BE USED FOR 6", 8", & 10" DRAINS ONLY.
3. FOR VITRIFIED CLAY PIPE DRAIN CONNECTION AND DRAIN STACK CONSTRUCTION, SEE SHEET NO. A.1.
4. FOR TRENCH BACKFILL, USE FA-6 SAND, CRUSHED CONCRETE SAND, OR STONE SAND.
5. FOR GRANULAR EMBEDMENT, USE CA-11, CRUSHED GRAVEL, CRUSHED STONE, OR CRUSHED CONCRETE.

# BRICK SEWER DRAIN CONNECTIONS

| STANDARD REVISIONS | |
|---|---|
| DATE | DESCRIPTION |
| 1/5/15 | APPROVED PLAN |
| | |
| | |
| | |
| | |

| PERCENT COMPLETE | DATE |
|---|---|
| 30 | |
| 60 | |
| 75 | |
| 90 | |
| 100 | |
| BULLETIN | |

CITY OF CHICAGO
DEPARTMENT OF WATER MANAGEMENT
BUREAU OF ENGINEERING SERVICES

DUCTILE IRON PIPE DRAIN CONNECTIONS

DRAWN: SBW
DESIGNED:
CHECKED:
REVIEWED:

A.2

OF

PN

| | | | | |
|---|---|---|---|---|
| DESIGN: MSA | | | | |
| DRAWN: MSA | | | | |
| CHECKED: TKL | | | | |
| APPROVED: | NO. | BY | DATE | DESCRIPTION |
| DATE: 01/22/2021 | REVISIONS | | | |

CDOT CHICAGO DEPARTMENT OF TRANSPORTATION

C*NECT

DRAINAGE DETAIL
DWM STANDARD DRAWING

JACKSON PARK MOBILITY IMPROVEMENTS

STA. TO STA.

| CONTRACT NO. | TOTAL SHEETS | SHEET NO. |
|---|---|---|
| - | 1434 | 522 |
| PROJECT NO. B-7-203 | DRAWING NO. DD-7 | |
| SCALE: | | |

PLOT DATE: 5/17/2021
PLOT SCALE: 40.0000 ' / in.
FILE NAME: pw:\\CIVIL-PW-INT.dsRTech.local\Civiltech Projects\Documents\Projects\3153\CADs\Sheets\Detail Sheets\Drainage\sht-drt-d-002.dgn

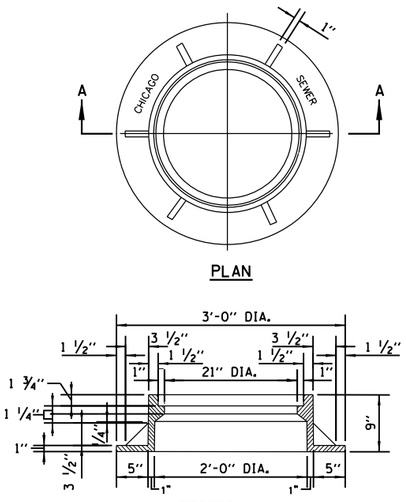


NOTE: METAL PLATES MUST BE FURNISHED FOR PERFORATED LIDS ON MANHOLES.

## HEAVYWEIGHT MANHOLE FRAME

MATERIAL: CAST IRON

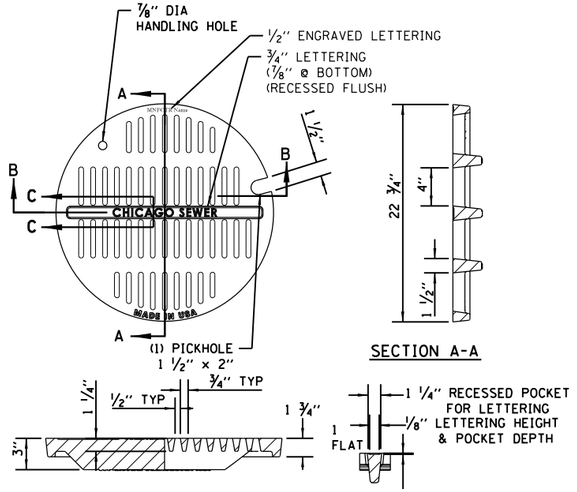


MATERIALS
GRATE-GRAY IRON
ASTM A48 CL35B
DESIGN LOAD
HEAVY DUTY
COATING
UNDIPPED
OPEN AREA
85.6 SQ. IN.

## STANDARD CB/MH LID

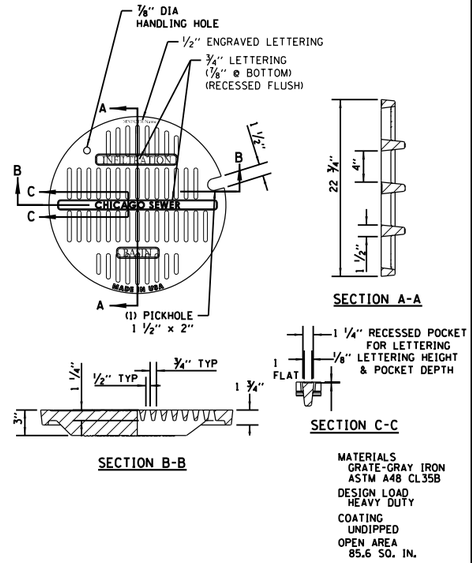


MATERIALS
GRATE-GRAY IRON
ASTM A48 CL35B
DESIGN LOAD
HEAVY DUTY
COATING
UNDIPPED
OPEN AREA
85.6 SQ. IN.

## STANDARD LID FOR INFILTRATION SYSTEMS

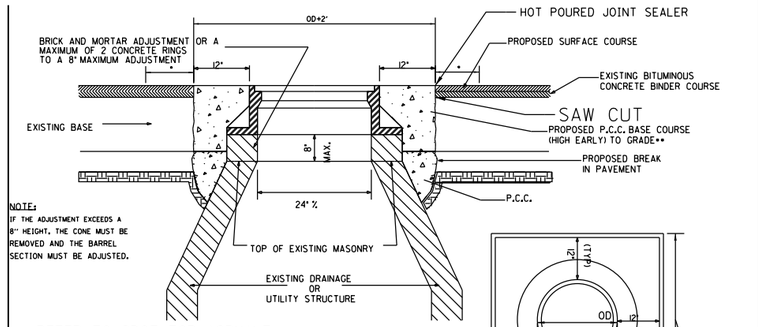


NOTE:
IF THE ADJUSTMENT EXCEEDS A 8" HEIGHT, THE CONE MUST BE REMOVED AND THE BARREL SECTION MUST BE ADJUSTED.

*REFER TO CDOT FOR ASPHALT RESTORATION REQUIREMENTS & CRACK SEALING.

** ON NON-MORATORIUM STREETS, FULL-DEPTH PCC BASE COURSE MAY BE UTILIZED. ON MORATORIUM STREETS, PAVEMENT RESTORATION SHALL ADHERE T CDOT REQUIREMENTS.

NOTES:

IF THE ADJUSTMENT EXCEEDS AN 8" HEIGHT, THE CONE MUST BE REMOVED AND THE BARREL SECTION MUST BE ADJUSTED.

THE CONTRACTOR IS REQUIRED TO REPLACE ANY BROKEN FRAMES AND LIDS OF SEWER STRUCTURES WITH STANDARD FRAMES AND LIDS OF THE DWM. IN ADJUSTMENT OR RECONSTRUCTION OF SEWER STRUCTURES, ANY NON-STANDARD FRAMES AND LIDS MUST BE REPLACED WITH STANDARD FRAMES AND LIDS. IN ADJUSTMENT OR RECONSTRUCTION OF INLETS, ANY NON-STANDARD INLETS (GUTTER BOXES) MUST BE REPLACED WITH DWM STANDARD INLETS.

THE FRAMES AND LIDS OF SEWER STRUCTURES TO BE ABANDONED, REMOVED, OR FILLED MUST BE SALVAGED AND THE DWM NOTIFIED FOR PICK UP.

MANHOLES, CATCH BASINS AND INLETS MUST BE PROTECTED FROM THE ENTRY OF ASPHALT/DEBRIS INTO THE SEWER SYSTEM DURING CONSTRUCTION. THE CONTRACTOR MUST MARK LOCATIONS OF ALL SEWER STRUCTURES ON THE SIDEWALK BEFORE STARTING PAVEMENT REMOVAL/REPLACEMENT. ADJUSTMENT OF FRAMES AND LIDS OF SEWER STRUCTURES MUST BE COMPLETED PRIOR TO STREET RESURFACING.

## DETAIL OF FRAME ADJUSTMENT

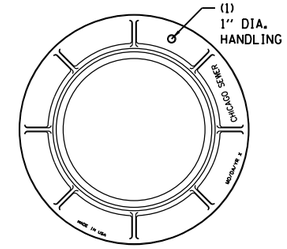


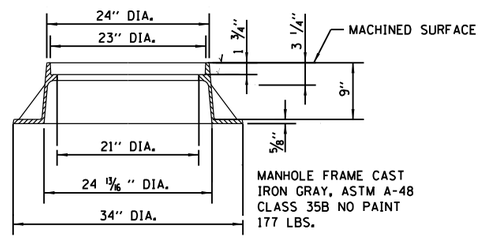


## LIGHTWEIGHT MANHOLE FRAME

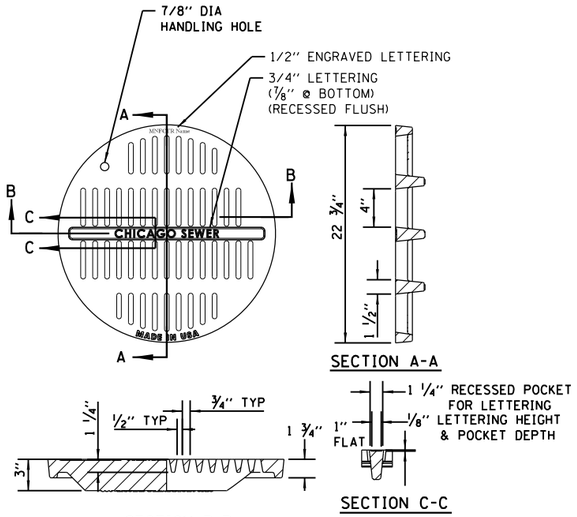


## ADA MANHOLE LID

NOTE:
NOT TO BE USED WITHOUT PRIOR APPROVAL OF CDWM

MATERIALS
GRATE-GRAY IRON
ASTM A48 CL35B
DESIGN LOAD
HEAVY DUTY
COATING
UNDIPPED
OPEN AREA
85.6 SQ. IN.

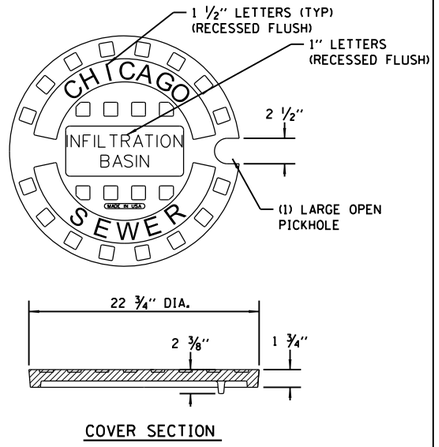


## INFILTRATION SOLID LID FOR CATCH BASIN

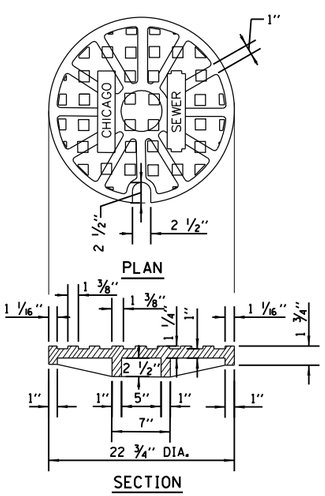


## SOLID LID FOR MANHOLES

| STANDARD REVISIONS | |
|---|---|
| DATE | DESCRIPTION |
| 1/5/15 | Approved |
| | |
| | |
| | |
| | |

| PERCENT COMPLETE | DATE |
|---|---|
| 30 | |
| 60 | |
| 75 | |
| 90 | |
| 100 | |
| BULLETIN | |

**CITY OF CHICAGO**
DEPARTMENT OF WATER MANAGEMENT
BUREAU OF ENGINEERING SERVICES

MANHOLE
LIDS AND FRAMES

DRAWN: SB#
DESIGNED:
CHECKED: GD, GC, SO
REVIEWED:

A.3

OF

PN

| | | | | |
|---|---|---|---|---|
| DESIGN: | MSA | | | |
| DRAWN: | MSA | | | |
| CHECKED: | TKL | | | |
| APPROVED: | NO. | BY | DATE | DESCRIPTION |
| DATE: 01/22/2021 | REVISIONS | | | |

CDOT CHICAGO DEPARTMENT OF TRANSPORTATION

C*NECT

DRAINAGE DETAIL
DWM STANDARD DRAWING

JACKSON PARK MOBILITY IMPROVEMENTS

STA. TO STA.

| CONTRACT NO. | TOTAL SHEETS | SHEET NO. |
|---|---|---|
| - | 1434 | 523 |
| PROJECT NO. B-7-203 | DRAWING NO. DD-8 | |
| SCALE: | | |

PLOT DATE: 5/17/2021
PLOT SCALE: 40.0000 ' / in.
FILE NAME: pw:\CIVIL-PW-JNT.cdwltech.local\CivilTech Projects\Documents\Projects\3133\CAD\Sheets\Detail Sheets\Drainage\std-dtl-003.dgn

SPECIAL DRAINAGE STRUCTURES
FOR PUBLIC STREETS AND ALLEYS

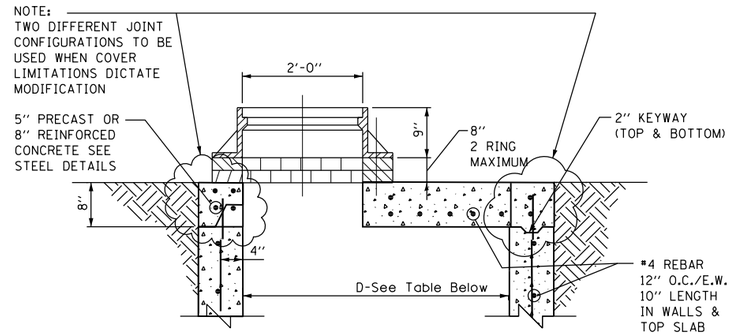


STANDARD FLAT TOP SLAB
FOR CATCH BASINS

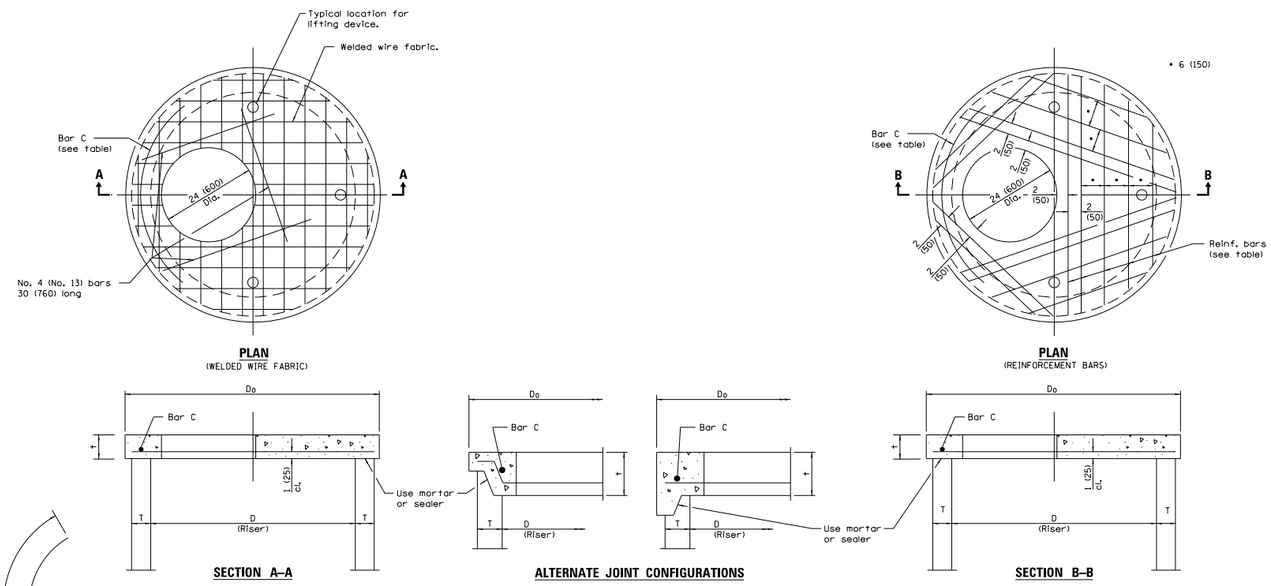


**TABLE**

| D | T | $D_o$ (min.) | t | Reinforcement "$A_s$" W.W.F. each direction | OR Bar size | No. 4 (No. 13) Bar C Length | Radius |
|---|---|---|---|---|---|---|---|
| 36 (900) | See applicable Standards | D + 2T | 6 (150) | 0.20 sq. in./ft. (425 sq. mm/m) | No. 4 (No. 13) | 4'-0" (1.2 m) | 19 (480) |
| 4'-0" (1.2 m) | | | 6 (150) | 0.35 sq. in./ft. (740 sq. mm/m) | No. 5 (No. 16) | 4'-6" (1.35 m) | 26 (660) |
| 5'-0" (1.5 m) | | | 8 (200) | 0.35 sq. in./ft. (740 sq. mm/m) | No. 5 (No. 16) | 5'-0" (1.5 m) | 32 (810) |

**GENERAL NOTES**

The flat slab top may be used in lieu of the tapered tops shown on Standards 602001, 602011, 602016, 602306, 602401, or 602501 at the option of the Contractor or when field conditions prohibit the use of tapered tops.

All dimensions are in millimeters (inches) unless otherwise shown.

**PRECAST REINFORCED CONCRETE FLAT SLAB TOP**

**STANDARD 602601–03**

NOTES:
FLAT TOP SLAB AAPLICATION CAN ONLY BE USED WITH WRITTEN PERMISSION FROM CDWM.
USE LATEST IDOT DETAIL, #602601

| STANDARD REVISIONS | |
|---|---|
| DATE | DESCRIPTION |
| 1/5/15 | APPROVED PLAN |

| PERCENT COMPLETE | DATE |
|---|---|
| 30 | |
| 60 | |
| 75 | |
| 90 | |
| 100 | |
| BULLETIN | |

CITY OF CHICAGO
DEPARTMENT OF WATER MANAGEMENT
BUREAU OF ENGINEERING SERVICES

FLAT TOP SLAB DETAILS

DRAWN: SBW
DESIGNED:
CHECKED:
REVIEWED:

A.4

OF

PN

| | | | | |
|---|---|---|---|---|
| DESIGN: MSA | | | | |
| DRAWN: MSA | | | | |
| CHECKED: TKL | | | | |
| APPROVED: | NO. | BY | DATE | DESCRIPTION |
| DATE: 01/22/2021 | REVISIONS | | | |

CDOT CHICAGO DEPARTMENT OF TRANSPORTATION

C*NECT

DRAINAGE DETAIL
DWM STANDARD DRAWING

JACKSON PARK MOBILITY IMPROVEMENTS

STA. TO STA.

CONTRACT NO. -
PROJECT NO. B-7-203
SCALE:

TOTAL SHEETS 1434
SHEET NO. 524
DRAWING NO. DD-9

PLOT DATE: 5/17/2021
PLOT SCALE: 40.0000 ' / in.
FILE NAME: pw:\\CIVIL-PW-INT.civiltech.local:Civiltech Projects\Documents\Projects\3153\CAD\Sheets\Detail Sheets\Drainage\sht-dtl-d-004.dgn

## NUMBER OF PRECAST RINGS REQUIRED FOR MANHOLES OF VARIOUS HEIGHTS

| TOTAL HEIGHT "H" | 9" FRAME +2'-8" CORBEL =3'-5" | PRECAST RINGS 4'-0" | 2'-8" | 1'-4" | 8" | 4" | BRICK AND/OR MORTAR | TOTAL HEIGHT "H" | 9" FRAME +2'-8" CORBEL =3'-5" | PRECAST RINGS 4'-0" | 2'-8" | 1'-4" | 8" | 4" | BRICK AND/OR MORTAR | TOTAL HEIGHT "H" | 9" FRAME +2'-8" CORBEL =3'-5" | PRECAST RINGS 4'-0" | 2'-8" | 1'-4" | 8" | 4" | BRICK AND/OR MORTAR |
|---|---|---|---|---|---|---|---|---|---|---|---|---|---|---|---|---|---|---|---|---|---|---|---|
| 5'-0" | 3'-5" | | | 1 | | | 3" | 12'-0" | 3'-5" | 2 | | | | 1 | 3" | 19'-0" | 3'-5" | 3 | 1 | | 1 | | 3" |
| 1" | " | | | 1 | | | 4" | 1" | " | 2 | | | | 1 | 4" | 1" | " | 3 | 1 | | 1 | | 4" |
| 2" | " | | | 1 | | 1 | 1" | 2" | " | 2 | | | 1 | | 1" | 2" | " | 3 | 1 | | 1 | 1 | 1" |
| 3" | " | | | 1 | | 1 | 2" | 3" | " | 2 | | | 1 | | 2" | 3" | " | 3 | 1 | | 1 | 1 | 2" |
| 4" | " | | | 1 | | 1 | 3" | 4" | " | 2 | | | 1 | | 3" | 4" | " | 3 | 1 | | 1 | 1 | 3" |
| 5" | " | | | 1 | | 1 | 4" | 5" | " | 2 | | | 1 | | 4" | 5" | " | 3 | 1 | | 1 | 1 | 4" |
| 6" | " | | | 1 | | | 1" | 6" | " | 2 | | | 1 | 1 | 1" | 6" | " | 4 | | | | | 1" |
| 7" | " | | | 1 | | | 2" | 7" | " | 2 | | | 1 | 1 | 2" | 7" | " | 4 | | | | | 2" |
| 8" | " | | | 1 | | | 3" | 8" | " | 2 | | | 1 | 1 | 3" | 8" | " | 4 | | | | | 3" |
| 9" | " | | | 1 | | | 4" | 9" | " | 2 | | | 1 | 1 | 4" | 9" | " | 4 | | | | | 4" |
| 10" | " | | | 1 | | 1 | 1" | 10" | " | 2 | | 1 | | | 1" | 10" | " | 4 | | | | 1 | 1" |
| 11" | " | | | 1 | | 1 | 2" | 11" | " | 2 | | 1 | | | 2" | 11" | " | 4 | | | | 1 | 2" |
| 6'-0" | 3'-5" | | | 1 | | 1 | 3" | 13'-0" | 3'-5" | 2 | | 1 | | | 3" | 20'-0" | 3'-5" | 4 | | | | 1 | 3" |
| 1" | " | | | 1 | | 1 | 4" | 1" | " | 2 | | 1 | | | 4" | 1" | " | 4 | | | | 1 | 4" |
| 2" | " | | 1 | | 1 | | 1" | 2" | " | 2 | | 1 | | 1 | 1" | 2" | " | 4 | | | 1 | | 1" |
| 3" | " | | 1 | | 1 | | 2" | 3" | " | 2 | | 1 | | 1 | 2" | 3" | " | 4 | | | 1 | | 2" |
| 4" | " | | 1 | | 1 | | 3" | 4" | " | 2 | | 1 | | 1 | 3" | 4" | " | 4 | | | 1 | | 3" |
| 5" | " | | 1 | | 1 | | 4" | 5" | " | 2 | | 1 | | 1 | 4" | 5" | " | 4 | | | 1 | | 4" |
| 6" | " | | 1 | | 1 | 1 | 1" | 6" | " | 2 | | 1 | 1 | | 1" | 6" | " | 4 | | | 1 | 1 | 1" |
| 7" | " | | 1 | | 1 | 1 | 2" | 7" | " | 2 | | 1 | 1 | | 2" | 7" | " | 4 | | | 1 | 1 | 2" |
| 8" | " | | 1 | | 1 | 1 | 3" | 8" | " | 2 | | 1 | 1 | | 3" | 8" | " | 4 | | | 1 | 1 | 3" |
| 9" | " | | 1 | | 1 | 1 | 4" | 9" | " | 2 | | 1 | 1 | | 4" | 9" | " | 4 | | | 1 | 1 | 4" |
| 10" | " | | 1 | | 1 | | 1" | 10" | " | 2 | | 1 | 1 | 1 | 1" | 10" | " | 4 | | 1 | | | 1" |
| 11" | " | | 1 | | 1 | | 2" | 11" | " | 2 | | 1 | 1 | 1 | 2" | 11" | " | 4 | | 1 | | | 2" |
| 7'-0" | 3'-5" | | 1 | | 1 | | 3" | 14'-0" | 3'-5" | 2 | | 1 | 1 | 1 | 3" | 21'-0" | 3'-5" | 4 | | 1 | | | 3" |
| 1" | " | | 1 | | 1 | | 4" | 1" | " | 2 | | 1 | 1 | 1 | 4" | 1" | " | 4 | | 1 | | | 4" |
| 2" | " | | 1 | | 1 | 1 | 1" | 2" | " | 2 | 1 | | | | 1" | 2" | " | 4 | | 1 | | 1 | 1" |
| 3" | " | | 1 | | 1 | 1 | 2" | 3" | " | 2 | 1 | | | | 2" | 3" | " | 4 | | 1 | | 1 | 2" |
| 4" | " | | 1 | | 1 | 1 | 3" | 4" | " | 2 | 1 | | | | 3" | 4" | " | 4 | | 1 | | 1 | 3" |
| 5" | " | | 1 | | 1 | 1 | 4" | 5" | " | 2 | 1 | | | | 4" | 5" | " | 4 | | 1 | | 1 | 4" |
| 6" | " | 1 | | | | | 1" | 6" | " | 2 | 1 | | | 1 | 1" | 6" | " | 4 | | 1 | 1 | | 1" |
| 7" | " | 1 | | | | | 2" | 7" | " | 2 | 1 | | | 1 | 2" | 7" | " | 4 | | 1 | 1 | | 2" |
| 8" | " | 1 | | | | | 3" | 8" | " | 2 | 1 | | | 1 | 3" | 8" | " | 4 | | 1 | 1 | | 3" |
| 9" | " | 1 | | | | | 4" | 9" | " | 2 | 1 | | | 1 | 4" | 9" | " | 4 | | 1 | 1 | | 4" |
| 10" | " | 1 | | | | 1 | 1" | 10" | " | 2 | 1 | | 1 | | 1" | 10" | " | 4 | | 1 | 1 | 1 | 1" |
| 11" | " | 1 | | | | 1 | 2" | 11" | " | 2 | 1 | | 1 | | 2" | 11" | " | 4 | | 1 | 1 | 1 | 2" |
| 8'-0" | 3'-5" | 1 | | | | 1 | 3" | 15'-0" | 3'-5" | 2 | 1 | | 1 | | 3" | 22'-0" | 3'-5" | 4 | | 1 | 1 | 1 | 3" |
| 1" | " | 1 | | | | 1 | 4" | 1" | " | 2 | 1 | | 1 | | 4" | 1" | " | 4 | | 1 | 1 | 1 | 4" |
| 2" | " | 1 | | | | | 1" | 2" | " | 2 | 1 | | 1 | 1 | 1" | 2" | " | 4 | 1 | | | | 1" |
| 3" | " | 1 | | | | | 2" | 3" | " | 2 | 1 | | 1 | 1 | 2" | 3" | " | 4 | 1 | | | | 2" |
| 4" | " | 1 | | | | | 3" | 4" | " | 2 | 1 | | 1 | 1 | 3" | 4" | " | 4 | 1 | | | | 3" |
| 5" | " | 1 | | | | | 4" | 5" | " | 2 | 1 | | 1 | 1 | 4" | 5" | " | 4 | 1 | | | | 4" |
| 6" | " | 1 | | | | 1 | 1" | 6" | " | 3 | | | | | 1" | 6" | " | 4 | 1 | | | 1 | 1" |
| 7" | " | 1 | | | | 1 | 2" | 7" | " | 3 | | | | | 2" | 7" | " | 4 | 1 | | | 1 | 2" |
| 8" | " | 1 | | | | 1 | 3" | 8" | " | 3 | | | | | 3" | 8" | " | 4 | 1 | | | 1 | 3" |
| 9" | " | 1 | | | | 1 | 4" | 9" | " | 3 | | | | | 4" | 9" | " | 4 | 1 | | | 1 | 4" |
| 10" | " | 1 | | 1 | | | 1" | 10" | " | 3 | | | | 1 | 1" | 10" | " | 4 | 1 | | 1 | | 1" |
| 11" | " | 1 | | 1 | | | 2" | 11" | " | 3 | | | | 1 | 2" | 11" | " | 4 | 1 | | 1 | | 2" |
| 9'-0" | 3'-5" | 1 | | 1 | | | 3" | 16'-0" | 3'-5" | 3 | | | | 1 | 3" | 23'-0" | 3'-5" | 4 | 1 | | 1 | | 3" |
| 1" | " | 1 | | 1 | | | 4" | 1" | " | 3 | | | | 1 | 4" | 1" | " | 4 | 1 | | 1 | | 4" |
| 2" | " | 1 | | 1 | | 1 | 1" | 2" | " | 3 | | | 1 | | 1" | 2" | " | 4 | 1 | | 1 | 1 | 1" |
| 3" | " | 1 | | 1 | | 1 | 2" | 3" | " | 3 | | | 1 | | 2" | 3" | " | 4 | 1 | | 1 | 1 | 2" |
| 4" | " | 1 | | 1 | | 1 | 3" | 4" | " | 3 | | | 1 | | 3" | 4" | " | 4 | 1 | | 1 | 1 | 3" |
| 5" | " | 1 | | 1 | | 1 | 4" | 5" | " | 3 | | | 1 | | 4" | 5" | " | 4 | 1 | | 1 | 1 | 4" |
| 6" | " | 1 | | 1 | | | 1" | 6" | " | 3 | | | 1 | 1 | 1" | 6" | " | 5 | | | | | 1" |
| 7" | " | 1 | | 1 | | | 2" | 7" | " | 3 | | | 1 | 1 | 2" | 7" | " | 5 | | | | | 2" |
| 8" | " | 1 | | 1 | | | 3" | 8" | " | 3 | | | 1 | 1 | 3" | 8" | " | 5 | | | | | 3" |
| 9" | " | 1 | | 1 | | | 4" | 9" | " | 3 | | | 1 | 1 | 4" | 9" | " | 5 | | | | | 4" |
| 10" | " | 1 | | 1 | | 1 | 1" | 10" | " | 3 | | 1 | | | 1" | 10" | " | 5 | | | | 1 | 1" |
| 11" | " | 1 | | 1 | | 1 | 2" | 11" | " | 3 | | 1 | | | 2" | 11" | " | 5 | | | | 1 | 2" |
| 10'-0" | 3'-5" | 1 | | 1 | | 1 | 3" | 17'-0" | 3'-5" | 3 | | 1 | | | 3" | 24'-0" | 3'-5" | 5 | | | | 1 | 3" |
| 1" | " | 1 | | 1 | | 1 | 4" | 1" | " | 3 | | 1 | | | 4" | 1" | " | 5 | | | | 1 | 4" |
| 2" | " | 1 | 1 | | 1 | | 1" | 2" | " | 3 | | 1 | | 1 | 1" | 2" | " | 5 | | | 1 | | 1" |
| 3" | " | 1 | 1 | | 1 | | 2" | 3" | " | 3 | | 1 | | 1 | 2" | 3" | " | 5 | | | 1 | | 2" |
| 4" | " | 1 | 1 | | 1 | | 3" | 4" | " | 3 | | 1 | | 1 | 3" | 4" | " | 5 | | | 1 | | 3" |
| 5" | " | 1 | 1 | | 1 | | 4" | 5" | " | 3 | | 1 | | 1 | 4" | 5" | " | 5 | | | 1 | | 4" |
| 6" | " | 1 | 1 | | 1 | 1 | 1" | 6" | " | 3 | | 1 | 1 | | 1" | 6" | " | 5 | | | 1 | 1 | 1" |
| 7" | " | 1 | 1 | | 1 | 1 | 2" | 7" | " | 3 | | 1 | 1 | | 2" | 7" | " | 5 | | | 1 | 1 | 2" |
| 8" | " | 1 | 1 | | 1 | 1 | 3" | 8" | " | 3 | | 1 | 1 | | 3" | 8" | " | 5 | | | 1 | 1 | 3" |
| 9" | " | 1 | 1 | | 1 | 1 | 4" | 9" | " | 3 | | 1 | 1 | | 4" | 9" | " | 5 | | | 1 | 1 | 4" |
| 10" | " | 1 | 1 | | 1 | | 1" | 10" | " | 3 | | 1 | 1 | 1 | 1" | 10" | " | 5 | | 1 | | | 1" |
| 11" | " | 1 | 1 | | 1 | | 2" | 11" | " | 3 | | 1 | 1 | 1 | 2" | 11" | " | 5 | | 1 | | | 2" |
| 11'-0" | 3'-5" | 1 | 1 | | 1 | | 3" | 18'-0" | 3'-5" | 3 | | 1 | 1 | 1 | 3" | 25'-0" | 3'-5" | 5 | | 1 | | | 3" |
| 1" | " | 1 | 1 | | 1 | | 4" | 1" | " | 3 | | 1 | 1 | 1 | 4" | 1" | " | 5 | | 1 | | | 4" |
| 2" | " | 1 | 1 | | 1 | 1 | 1" | 2" | " | 3 | 1 | | | | 1" | 2" | " | 5 | | 1 | | 1 | 1" |
| 3" | " | 1 | 1 | | 1 | 1 | 2" | 3" | " | 3 | 1 | | | | 2" | 3" | " | 5 | | 1 | | 1 | 2" |
| 4" | " | 1 | 1 | | 1 | 1 | 3" | 4" | " | 3 | 1 | | | | 3" | 4" | " | 5 | | 1 | | 1 | 3" |
| 5" | " | 1 | 1 | | 1 | 1 | 4" | 5" | " | 3 | 1 | | | | 4" | 5" | " | 5 | | 1 | | 1 | 4" |
| 6" | " | 2 | | | | | 1" | 6" | " | 3 | 1 | | | 1 | 1" | 6" | " | 5 | | 1 | 1 | | 1" |
| 7" | " | 2 | | | | | 2" | 7" | " | 3 | 1 | | | 1 | 2" | 7" | " | 5 | | 1 | 1 | | 2" |
| 8" | " | 2 | | | | | 3" | 8" | " | 3 | 1 | | | 1 | 3" | 8" | " | 5 | | 1 | 1 | | 3" |
| 9" | " | 2 | | | | | 4" | 9" | " | 3 | 1 | | | 1 | 4" | 9" | " | 5 | | 1 | 1 | | 4" |
| 10" | " | 2 | | | | 1 | 1" | 10" | " | 3 | 1 | | 1 | | 1" | 10" | " | 5 | | 1 | 1 | 1 | 1" |
| 11" | " | 2 | | | | 1 | 2" | 11" | " | 3 | 1 | | 1 | | 2" | 11" | " | 5 | | 1 | 1 | 1 | 2" |

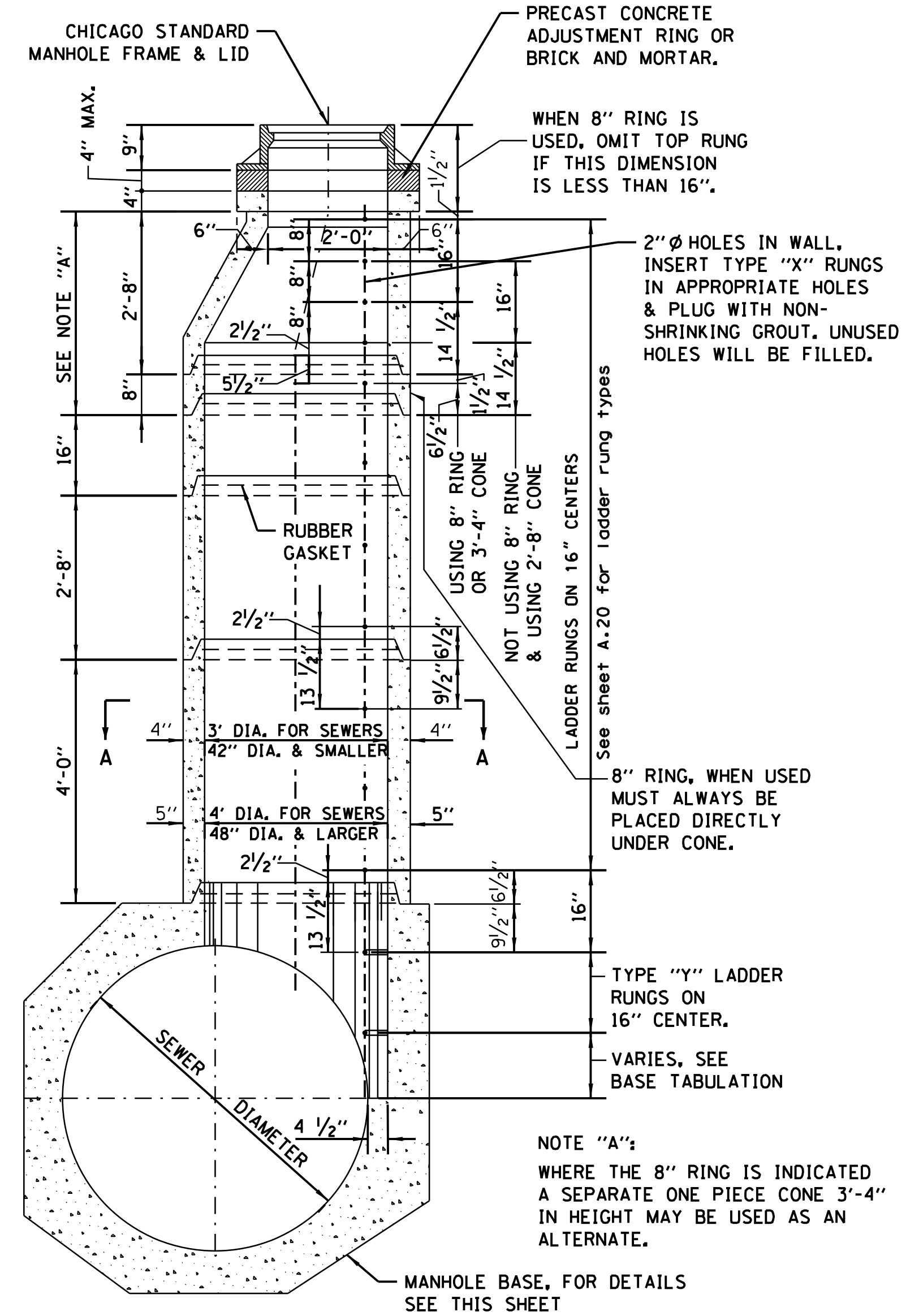


NOTE "A":
WHERE THE 8" RING IS INDICATED A SEPARATE ONE PIECE CONE 3'-4" IN HEIGHT MAY BE USED AS AN ALTERNATE.

## DETAIL OF PRECAST RINGS

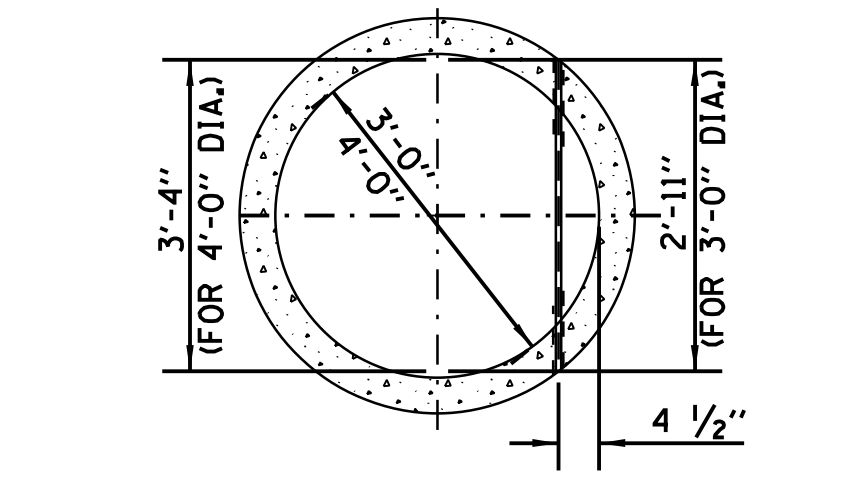


1"Ø LADDER RUNG,TYPE "X", LENGTH 2'-11" OR 3'-4" INSERTED INTO 2"Ø HOLE IN WALL & PLUGGED BY MANUFACTURER WITH NON-SHRINKING GROUT.

**SECTION A-A**

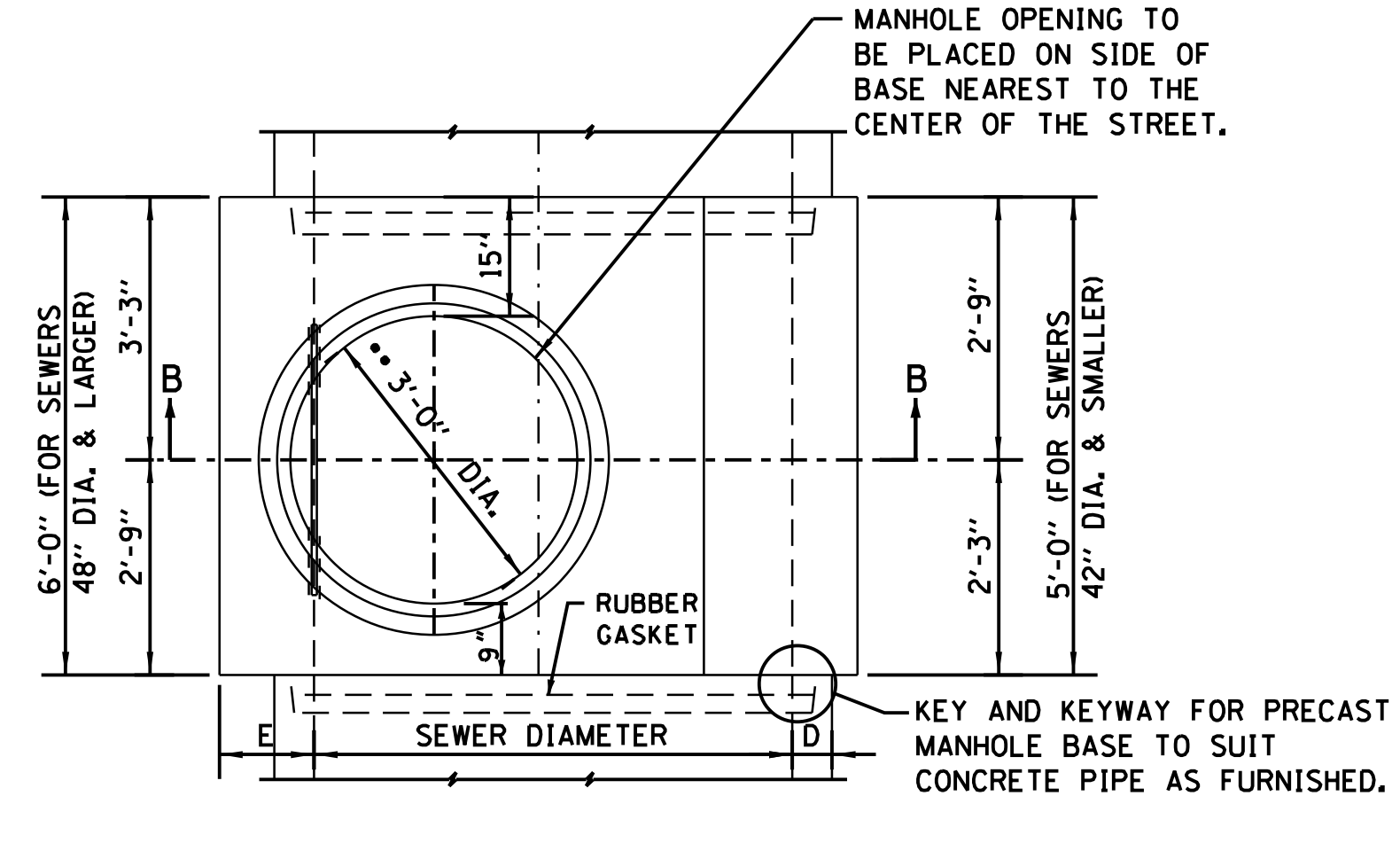


**PLAN** •• {3'-0" DIA. FOR SEWERS 42" DIA. & SMALLER; 4'-0" DIA. FOR SEWERS 48" DIA. & LARGER

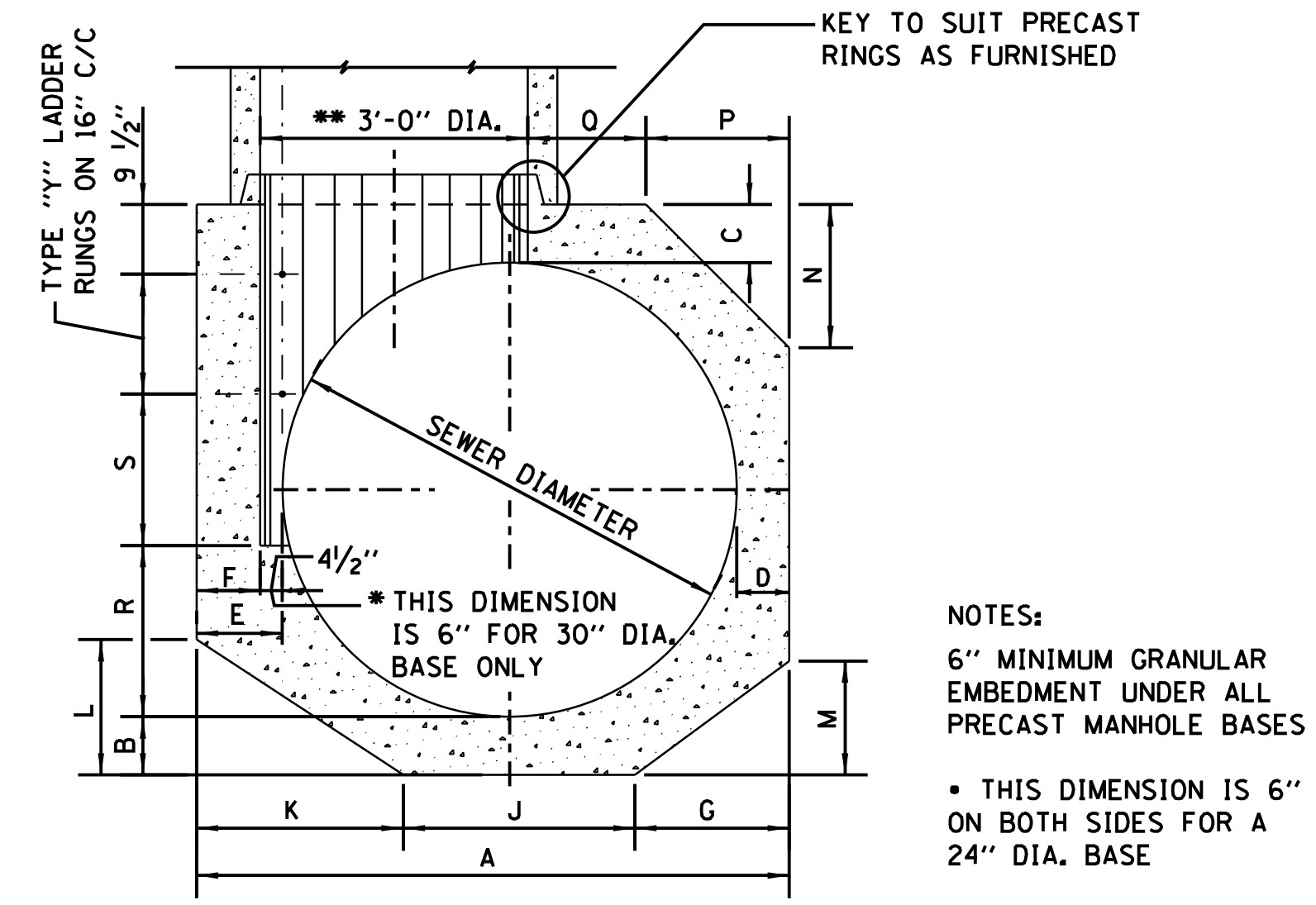


NOTES:
6" MINIMUM GRANULAR EMBEDMENT UNDER ALL PRECAST MANHOLE BASES

• THIS DIMENSION IS 6" ON BOTH SIDES FOR A 24" DIA. BASE

**SECTION B-B**

## DETAIL OF PRECAST BASE

| SEWER DIA. | DIMENSIONS OF PRECAST MANHOLE BASE A | B | C | D | E | F | G | J | K | L | M | N | P | Q | R | S | # "Y" RUNGS |
|---|---|---|---|---|---|---|---|---|---|---|---|---|---|---|---|---|---|
| 120" | 12'-4 1/2" | 12" | 12" | 12" | 16 1/2" | 12" | 4'-0" | 4'-0" | 4'-4 1/2" | 2'-7 1/2" | 2'-5" | 3'-6" | 3'-6" | 3'-10 1/2" | 2'-0" | 18 1/2" | 6 |
| 108" | 11'-4 1/2" | 12" | 12" | 12" | 16 1/2" | 12" | 3'-8" | 3'-8" | 4'-0 1/2" | 2'-5" | 2'-2" | 3'-2 1/2" | 3'-2 1/2" | 3'-2" | 2'-0" | 6 1/2" | 6 |
| 102" | 10'-10 1/2" | 12" | 12" | 12" | 16 1/2" | 12" | 3'-6" | 3'-6" | 3'-10 1/2" | 2'-4" | 2'-1" | 3'-0" | 3'-0" | 2'-10 1/2" | 2'-0" | 16 1/2" | 5 |
| 96" | 10'-2 1/2" | 11" | 11" | 11" | 15 1/2" | 11" | 3'-3" | 3'-3" | 3'-8 1/2" | 2'-3" | 23" | 2'-10 1/2" | 2'-10 1/2" | 2'-5" | 2'-0" | 9 1/2" | 5 |
| 90" | 9'-8 1/2" | 11" | 11" | 11" | 15 1/2" | 11" | 3'-1" | 3'-1" | 3'-6 1/2" | 2'-1 1/2" | 22" | 2'-9" | 2'-9" | 2'-0 1/2" | 2'-0" | 19 1/2" | 4 |
| 84" | 9'-0 1/2" | 10" | 10" | 10" | 14 1/2" | 10" | 2'-11" | 2'-11" | 3'-2 1/2" | 23" | 21" | 2'-5 1/2" | 2'-5 1/2" | 1'-9" | 2'-0" | 12 1/2" | 4 |
| 78" | 8'-6 1/2" | 10" | 10" | 10" | 14 1/2" | 10" | 2'-9" | 2'-9" | 3'-0 1/2" | 22" | 20" | 2'-4 1/2" | 2'-4 1/2" | 1'-4" | 2'-0" | 6 1/2" | 4 |
| 72" | 7'-10 1/2" | 9" | 9" | 9" | 13 1/2" | 9" | 2'-6" | 2'-6" | 2'-10 1/2" | 21" | 18" | 2'-2 1/4" | 2'-2 1/4" | 11 1/4" | 2'-0" | 15 1/2" | 3 |
| 66" | 7'-4 1/2" | 9" | 9" | 9" | 13 1/2" | 9" | 2'-4" | 2'-4" | 2'-8 1/2" | 19 1/2" | 17" | 2'-0 1/2" | 2'-0 1/2" | 7" | 2'-0" | 9 1/2" | 3 |
| 60" | 6'-8 1/2" | 8" | 8" | 8" | 12 1/2" | 8" | 2'-1 1/2" | 2'-1" | 2'-6" | 18" | 15" | 1'-5 1/2" | 1'-5 1/2" | 7" | 2'-0" | 18 1/2" | 2 |
| 54" | 6'-2 1/2" | 8" | 8" | 8" | 12 1/2" | 8" | 23 1/2" | 23" | 2'-4" | 17" | 14" | 11 1/2" | 11 1/2" | 7" | 2'-0" | 12 1/2" | 2 |
| 48" | 5'-6 1/2" | 7" | 7" | 7" | 11 1/2" | 7" | 20 1/2" | 21" | 2'-1" | 15" | 12 1/2" | 4 1/2" | 4 1/2" | 7" | 2'-0" | 21 1/2" | 1 |
| 42" | 5'-0 1/2" | 7" | 7" | 7" | 11 1/2" | 7" | 18 1/2" | 19" | 23" | 14" | 11" | — | — | 17 1/2" | 21" | 18 1/2" | 1 |
| 36" | 4'-4 1/2" | 6" | 6" | 6" | 10 1/2" | 6" | 16" | 16" | 20 1/2" | 12 1/2" | 9 1/2" | — | — | 10 1/2" | 18" | 14 1/2" | 1 |
| 30" | 4'-0" | 6" | 6" | 6" | 12" | 6" | 14" | 14" | 20" | 12" | 8 1/2" | — | — | 6" | 15" | 11 1/2" | 1 |
| 24" | 4'-0" | 6" | 6" | 12" | 12" | 6" | 16" | 16" | 16" | 9 1/2" | 9 1/2" | — | — | 6" | 12" | 8 1/2" | 1 |

NOTES:

PRECAST CONCRETE RINGS MUST CONFORM TO A.S.T.M. DESIGNATION C76 FOR "REINFORCED CONCRETE CULVERT, STORM DRAIN, AND SEWER PIPE", CLASS II, WALL B.

STANDARD LENGTHS OF RINGS ARE: 4'-0", 2'-8", 1'-4", 0'-8" AND 0'-4" COLLAR.

ALL REINFORCEMENT STEEL REQUIRED FOR PRECAST RINGS MUST BE INCLUDED IN THE PRICE BID FOR ALL MANHOLE ITEMS.

| STANDARD REVISIONS | |
|---|---|
| DATE | DESCRIPTION |
| 12/28/15 | APPROVED PLAN |

| PERCENT COMPLETE | DATE |
|---|---|
| 30 | |
| 60 | |
| 75 | |
| 90 | |
| 100 | |
| BULLETIN | |

CITY OF CHICAGO
DEPARTMENT OF WATER MANAGEMENT
BUREAU OF ENGINEERING SERVICES

TYPE "A" MANHOLE PRECAST BASES AND RINGS

DRAWN: SBW
DESIGNED:
CHECKED:
REVIEWED:

A.5

OF

PN

PLOT DATE: 5/17/2021
PLOT SCALE: 40.0000 ' / in.
FILE NAME: pw:\\CIVIL-PW-INT.civiltech.local:Civiltech Projects\Documents\Projects\3153\CAD\Sheets\Detail Sheets\Drainage\sht-dtl-d-005.dgn

| DESIGN: MSA | | | |
|---|---|---|---|
| DRAWN: MSA | | | |
| CHECKED: TKL | | | |
| APPROVED: | NO. | BY | DATE | DESCRIPTION |
| DATE: 01/22/2021 | REVISIONS | | |

CDOT CHICAGO DEPARTMENT OF TRANSPORTATION

C*NECT

DRAINAGE DETAIL
DWM STANDARD DRAWING

JACKSON PARK MOBILITY IMPROVEMENTS

STA. TO STA.

CONTRACT NO. -
PROJECT NO. B-7-203
SCALE:

TOTAL SHEETS 1434
SHEET NO. 525
DRAWING NO. DD-10

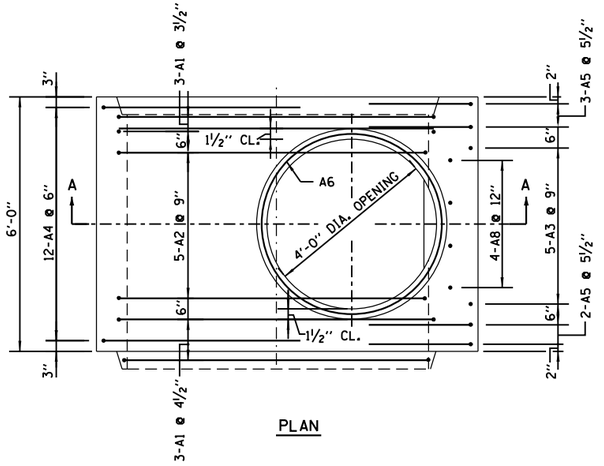


PLAN

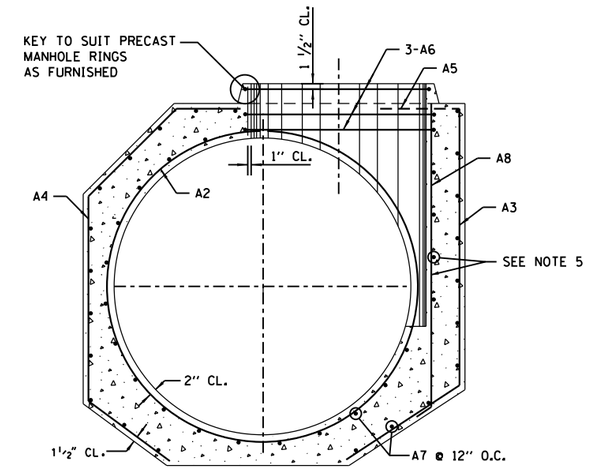


SECTION A-A

## MANHOLE BASE FOR SEWERS 48'' DIA. TO 120'' DIA. INCLUSIVE

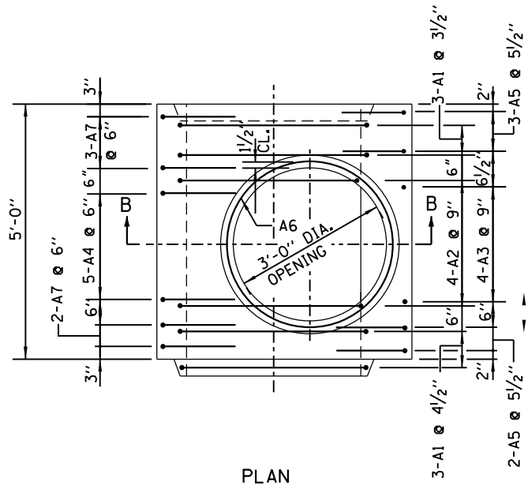


PLAN

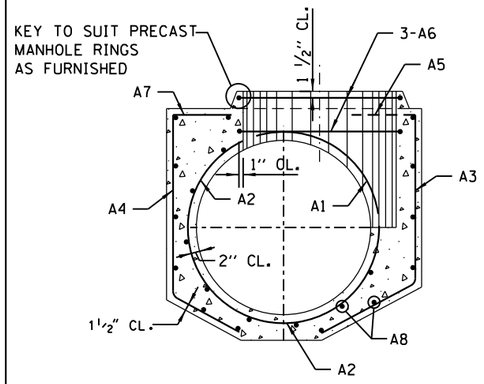


SECTION B-B

## MANHOLE BASE FOR SEWERS 36'' DIA. AND 42'' DIA.

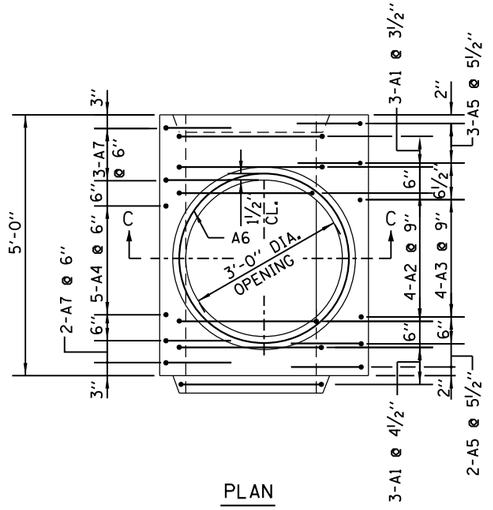


PLAN

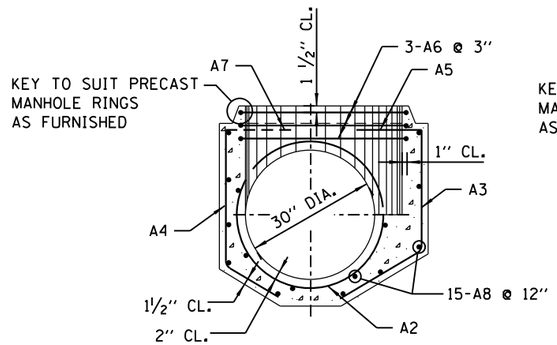


SECTION C-C

## MANHOLE BASE FOR 30'' DIA. SEWERS

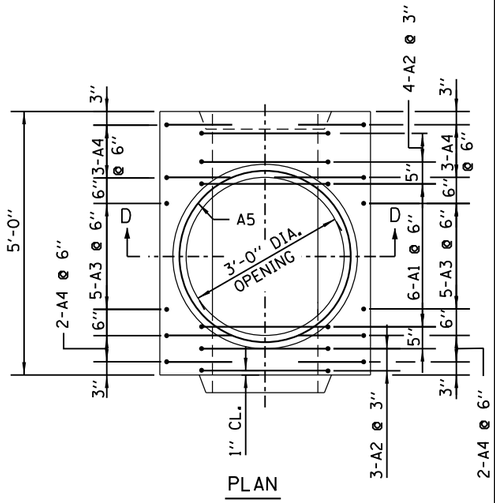


PLAN

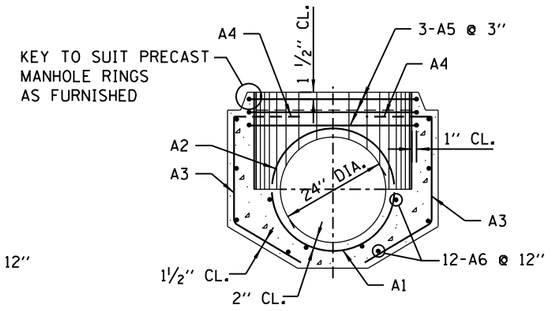


SECTION D-D

## MANHOLE BASE FOR 24'' DIA. SEWERS

NOTES:
1. TWO LAYERS OF REINFORCEMENT FOR 66'' DIA. MANHOLE AND OVER.

| STANDARD REVISIONS | |
|---|---|
| DATE | DESCRIPTION |
| 1/5/15 | REVISION |
| | |
| | |
| | |
| | |

| PERCENT COMPLETE | DATE |
|---|---|
| 30 | |
| 60 | |
| 75 | |
| 90 | |
| 100 | |
| BULLETIN | |

**CITY OF CHICAGO**
DEPARTMENT OF WATER MANAGEMENT
BUREAU OF ENGINEERING SERVICES

REINFORCEMENT FOR TYPE ''A'' PRECAST MANHOLE BASES

DRAWN: SBW
DESIGNED:
CHECKED:
REVIEWED:

A.6

OF

PN

| | | | | |
|---|---|---|---|---|
| DESIGN: MSA | | | | |
| DRAWN: MSA | | | | |
| CHECKED: TKL | | | | |
| APPROVED: | NO. | BY | DATE | DESCRIPTION |
| DATE: 01/22/2021 | REVISIONS | | | |

CDOT CHICAGO DEPARTMENT OF TRANSPORTATION

C*NECT

DRAINAGE DETAIL
DWM STANDARD DRAWING

JACKSON PARK MOBILITY IMPROVEMENTS

STA. TO STA.

CONTRACT NO. -
PROJECT NO. B-7-203
SCALE:

TOTAL SHEETS 1434
SHEET NO. 526
DRAWING NO. DD-11

PLOT DATE: 5/17/2021
PLOT SCALE: 40.0000 ' / in.
FILE NAME: pw:\\CIVIL-PW-NT.cdot.tech.local:CivilTech Projects:Documents\Projects 3153\CADD\Sheets\Detail Sheets\Drainage\sht-dtl-5-a006.dgn

# SCHEDULE OF REINFORCEMENT

## BASES FOR TYPE "A" MANHOLES (Precast)

| STRUCTURE | REINFORCEMENT BAR | | | | | | | BENDING DIMENSIONS | | | | | | | | | | | |
|---|---|---|---|---|---|---|---|---|---|---|---|---|---|---|---|---|---|---|---|
| | MARK | SIZE NO. | TYPE | LENGTH | NO. REQD. | WEIGHT - LBS EACH | WEIGHT - LBS TOTAL | A | B | C | D | E | F | G | H | J | K | O | R |
| 120" DIA. | 120A1 | 8 | T3 | 35'-4¾" | 6 | 94.51 | 567 | | | | | | | | | | 2'-8" | 10'-5" | |
| | 120A2 | 7 | 9 | 22'-5" | 5 | 45.82 | 229 | | 22'-5" | | | | | | 8'-0" | | | 8'-7½" | 5'-2½" |
| | 120A3 | 6 | 12 | 14'-4⅝" | 5 | 21.61 | 108 | | | 9'-6⅝" | 4'-10" | | | | 4'-3½" | | 2'-2½" | | |
| | 120A4 | 7 | D10 | 19'-0⅛" | 12 | 38.86 | 466 | 4'-6" | 5'-11½" | 4'-10¼" | 3'-8⅜" | 3'-10¼" | 2'-3¾" | | 3'-5⅛" | | 3'-5⅛" | | |
| | 120A5 | 8 | 12 | 17'-10⅝" | 5 | 47.76 | 239 | | 3'-6" | 9'-6⅝" | 4'-10" | | | | 4'-3½" | | 2'-2½" | | |
| | 120A6 | 5 | T3 | 15'-1" | 3 | 15.74 | 47 | | | | | | | | | | 20" | 4'-3¼" | |
| | 120A7 | 4 | STR. | 5'-8" | 66 | 3.79 | 250 | | | | | | | | | | | | |
| | 120A8 | 5 | 12 | 10'-9" | 4 | 11.21 | 45 | | | 9'-9" | 1'-0" | | | | 10¼" | | 6¼" | | |
| | TOTAL | | | | | | 1951 | | | | | | | | | | | | |
| 108" DIA. | 108A1 | 7 | T3 | 31'-11" | 6 | 65.24 | 391 | | | | | | | | | | 2'-4" | 9'-5" | |
| | 108A2 | 6 | 9 | 20'-2⅝" | 5 | 30.37 | 152 | | 20'-2⅝" | | | | | | 7'-2½" | | | 7'-9⅝" | 4'-8½" |
| | 108A3 | 6 | 12 | 12'-9" | 5 | 19.15 | 96 | | | 8'-5" | 4'-4" | | | | 3'-8½" | | 2'-2¾" | | |
| | 108A4 | 7 | D10 | 17'-0⅝" | 12 | 34.81 | 418 | 4'-1" | 5'-6¼" | 4'-5¼" | 2'-11⅞" | 3'-6" | 2'-1⅛" | | 3'-1⅝" | | 3'-1⅝" | | |
| | 108A5 | 7 | 12 | 16'-0" | 5 | 32.70 | 163 | | 3'-3" | 8'-5" | 4'-4" | | | | 3'-8½" | | 2'-2¾" | | |
| | 108A6 | 5 | T3 | 15'-1" | 3 | 15.74 | 47 | | | | | | | | | | 20" | 4'-3¼" | |
| | 108A7 | 4 | STR. | 5'-8" | 62 | 3.79 | 234 | | | | | | | | | | | | |
| | 108A8 | 5 | 12 | 9'-8" | 4 | 10.09 | 40 | | | 8'-8" | 1'-0" | | | | 10¼" | | 6¼" | | |
| | TOTAL | | | | | | 1541 | | | | | | | | | | | | |
| 102" DIA. | 102A1 | 7 | T3 | 30'-3" | 6 | 61.83 | 371 | | | | | | | | | | 2'-4" | 8'-10¾" | |
| | 102A2 | 6 | 9 | 19'-0" | 5 | 28.54 | 143 | | 19'-0" | | | | | | 6'-9½" | | | 7'-4½" | 4'-5½" |
| | 102A3 | 6 | 12 | 12'-3" | 5 | 18.40 | 92 | | | 8'-0" | 4'-3" | | | | 3'-7⅞" | | 2'-2" | | |
| | 102A4 | 7 | D10 | 16'-0½" | 12 | 32.79 | 393 | 3'-9" | 5'-5½" | 4'-1⅝ | 2'-8⅜" | 3'-2½" | 23" | | 2'-11⅛" | | 2'-11⅛" | | |
| | 102A5 | 7 | 12 | 15'-4" | 5 | 31.34 | 157 | | 3'-1" | 8'-0" | 4'-3" | | | | 3'-7⅞" | | 2'-2" | | |
| | 102A6 | 5 | T3 | 15'-1" | 3 | 15.74 | 47 | | | | | | | | | | 20" | 4'-3¼" | |
| | 102A7 | 4 | STR. | 5'-8" | 58 | 3.79 | 220 | | | | | | | | | | | | |
| | 102A8 | 5 | 12 | 9'-3" | 4 | 9.65 | 39 | | | 8'-3" | 1'-0" | | | | 10¼" | | 6¼" | | |
| | TOTAL | | | | | | 1462 | | | | | | | | | | | | |
| 96" DIA. | 96A1 | 7 | T3 | 28'-8" | 6 | 58.38 | 352 | | | | | | | | | | 2'-4" | 8'-5" | |
| | 96A2 | 6 | 9 | 17'-11¼" | 5 | 26.94 | 135 | | 17'-11¼" | | | | | | 6'-4" | | | 7'-2½" | 4'-2½" |
| | 96A3 | 6 | 12 | 11'-6" | 5 | 17.27 | 86 | | | 7'-5" | 4'-1" | | | | 3'-6" | | 2'-1¼" | | |
| | 96A4 | 7 | D10 | 14'-10⅝" | 12 | 30.38 | 365 | 3'-8" | 5'-0" | 3'-11½" | 2'-2⅞" | 3'-1¾" | 22½" | | 2'-9⅝" | | 2'-9⅝" | | |
| | 96A5 | 7 | 12 | 13'-5" | 5 | 27.43 | 137 | | 2'-10¾" | 7'-5" | 4'-1" | | | | 3'-6" | | 2'-1¼" | | |
| | 96A6 | 5 | T3 | 15'-1" | 3 | 15.74 | 47 | | | | | | | | | | 20" | 4'-3¼" | |
| | 96A7 | 4 | STR. | 5'-8" | 54 | 3.79 | 204 | | | | | | | | | | | | |
| | 96A8 | 5 | 12 | 8'-8" | 4 | 9.04 | 36 | | | 7'-8" | 1'-0" | | | | 10" | | 6⅝" | | |
| | TOTAL | | | | | | 1362 | | | | | | | | | | | | |
| 90" DIA. | 90A1 | 6 | T3 | 26'-6" | 6 | 39.80 | 239 | | | | | | | | | | 2'-0" | 7'-10½" | |
| | 90A2 | 5 | 9 | 16'-7¼" | 5 | 17.32 | 87 | | 16'-7¼" | | | | | | 5'-10¼" | | | 6'-9⅝" | 3'-11¼" |
| | 90A3 | 6 | 12 | 11'-0" | 5 | 16.52 | 83 | | | 7'-0" | 4'-0" | | | | 3'-5" | | 2'-0¾" | | |
| | 90A4 | 6 | D10 | 13-9⅜" | 12 | 20.70 | 248 | 3'-6" | 4'-7½" | 3'-9½" | 22⅜" | 3'-0" | 21½" | | 2'-8⅛" | | 2'-8⅛" | | |
| | 90A5 | 6 | 12 | 13'-9" | 5 | 20.65 | 103 | | 2'-9" | 7'-0" | 4'-0" | | | | 3'-5" | | 2'-0¾" | | |
| | 90A6 | 5 | T3 | 15'-1" | 3 | 15.74 | 47 | | | | | | | | | | 20" | 4'-3¼" | |
| | 90A7 | 4 | STR. | 5'-8" | 50 | 3.79 | 189 | | | | | | | | | | | | |
| | 90A8 | 5 | 12 | 8'-2" | 4 | 8.51 | 34 | | | 7'-2" | 1'-0" | | | | 9¾" | | 7" | | |
| | TOTAL | | | | | | 1030 | | | | | | | | | | | | |
| 84" DIA. | 84A1 | 6 | T3 | 25'-3" | 6 | 37.93 | 228 | | | | | | | | | | 2'-0" | 7'-4½" | |
| | 84A2 | 5 | 9 | 15'-5½" | 5 | 16.12 | 81 | | 15'-5½" | | | | | | 5'-5¼" | | | 8'-2¼" | 3'-8¼" |
| | 84A3 | 5 | 12 | 9'-10" | 5 | 10.26 | 51 | | | 6'-4" | 3'-6" | | | | 3'-0" | | 21½" | | |
| | 84A4 | 6 | D10 | 12-6⅛" | 12 | 18.79 | 225 | 3'-2" | 4'-4⅝" | 3'-4½" | 1'-6⅞" | 2'-8½" | 19½" | | 2'-4⅝" | | 2'-4⅝" | | |
| | 84A5 | 6 | 12 | 12'-5" | 5 | 18.65 | 93 | | 2'-7" | 6'-4" | 3'-6" | | | | 3'-0" | | 21½" | | |
| | 84A6 | 5 | T3 | 15'-1" | 3 | 15.74 | 47 | | | | | | | | | | 20" | 4'-3¼" | |
| | 84A7 | 4 | STR. | 5'-8" | 46 | 3.79 | 174 | | | | | | | | | | | | |
| | 84A8 | 5 | 12 | 7'-6" | 4 | 7.82 | 31 | | | 6'-6" | 1'-0" | | | | 10¼" | | 6¼" | | |
| | TOTAL | | | | | | 930 | | | | | | | | | | | | |
| 78" DIA. | 78A1 | 6 | T3 | 23'-7" | 6 | 35.42 | 213 | | | | | | | | | | 2'-0" | 6'-10½" | |
| | 78A2 | 5 | 9 | 14'-3¾" | 5 | 14.93 | 75 | | 14'-3¾" | | | | | | 5'-0" | | | 7'-9¾" | 3'-5¼" |
| | 78A3 | 5 | 12 | 9'-3" | 5 | 9.65 | 48 | | | 6'-1" | 3'-2" | | | | 2'-8½" | | 19⅝" | | |
| | 78A4 | 6 | D10 | 11-5⅛" | 12 | 17.26 | 207 | 3'-1" | 4'-0" | 3'-3" | 1'-1⅞" | 2'-7⅝" | 19⅛" | | 2'-3⅝" | | 2'-3⅝" | | |
| | 78A5 | 6 | 12 | 11'-9" | 5 | 17.65 | 88 | | 2'-6" | 6'-1" | 3'-2" | | | | 2'-8½" | | 19⅝" | | |
| | 78A6 | 5 | T3 | 15'-1" | 3 | 15.74 | 47 | | | | | | | | | | 20" | 4'-3¼" | |
| | 78A7 | 4 | STR. | 5'-8" | 42 | 3.79 | 159 | | | | | | | | | | | | |
| | 78A8 | 5 | 12 | 7'-3" | 4 | 7.56 | 30 | | | 6'-3" | 1'-0" | | | | 9¾" | | 7" | | |
| | TOTAL | | | | | | 867 | | | | | | | | | | | | |
| 72" DIA. | 72A1 | 6 | T3 | 22'-0" | 6 | 33.04 | 198 | | | | | | | | | | 2'-0" | 6'-4½" | |
| | 72A2 | 5 | 9 | 13'-3" | 5 | 13.82 | 69 | | 13'-3" | | | | | | 4'-8" | | | 5'-6" | 3'-2" |
| | 72A3 | 5 | 12 | 8'-6" | 5 | 8.87 | 44 | | | 5'-6" | 3'-0" | | | | 2'-6¾" | | 18¾" | | |
| | 72A4 | 6 | D10 | 9'-11⅜" | 12 | 14.94 | 179 | 2'-6" | 3'-8¼" | 3'-0" | 9⅛" | 2'-1¾" | 15½" | | 2'-1⅜" | | 2'-1⅜" | | |
| | 72A5 | 6 | 12 | 10'-9" | 5 | 16.15 | 81 | | 2'-3" | 5'-6" | 3'-0" | | | | 2'-6¾" | | 18¾" | | |
| | 72A6 | 5 | T3 | 15'-1" | 3 | 15.74 | 47 | | | | | | | | | | 20" | 4'-3¼" | |
| | 72A7 | 4 | STR. | 5'-8" | 38 | 3.79 | 144 | | | | | | | | | | | | |
| | 72A8 | 5 | 12 | 6'-9" | 4 | 7.04 | 28 | | | 5'-9" | 1'-0" | | | | 10¼" | | 6¼" | | |
| | TOTAL | | | | | | 790 | | | | | | | | | | | | |

## BASES FOR TYPE "A" MANHOLES (Precast)

| STRUCTURE | REINFORCEMENT BAR | | | | | | | BENDING DIMENSIONS | | | | | | | | | | | |
|---|---|---|---|---|---|---|---|---|---|---|---|---|---|---|---|---|---|---|---|
| | MARK | SIZE NO. | TYPE | LENGTH | NO. REQD. | WEIGHT - LBS EACH | WEIGHT - LBS TOTAL | A | B | C | D | E | F | G | H | J | K | O | R |
| 66" DIA. | 66A1 | 6 | T3 | 20'-5" | 6 | 30.73 | 184 | | | | | | | | | | 2'-0" | 5'-10½" | |
| | 66A2 | 5 | 9 | 11'-10" | 5 | 12.35 | 62 | | 11'-10" | | | | | | 4'-2⅛" | | | 5'-1¾" | 2'-11⅛" |
| | 66A3 | 5 | 12 | 8'-2" | 5 | 8.52 | 43 | | | 5'-2" | 3'-0" | | | | 2'-7" | | 18½" | | |
| | 66A4 | 5 | D10 | 9'-1⅜" | 12 | 9.51 | 114 | 2'-6" | 3'-5" | 2'-9½" | 4⅞" | 2'-2" | 15" | | 23⅝" | | 23⅝" | | |
| | 66A5 | 6 | 12 | 10'-4" | 5 | 15.50 | 78 | | 2'-2" | 5'-2" | 3'-0" | | | | 2'-7" | | 18½" | | |
| | 66A6 | 5 | T3 | 15'-1" | 3 | 15.74 | 47 | | | | | | | | | | 20" | 4'-3¼" | |
| | 66A7 | 4 | STR. | 5'-8" | 36 | 3.79 | 136 | | | | | | | | | | | | |
| | 66A8 | 5 | 12 | 6'-5" | 4 | 6.69 | 27 | | | 5'-5" | 1'-0" | | | | 10¼" | | 6¼" | | |
| | TOTAL | | | | | | 691 | | | | | | | | | | | | |
| 60" DIA. | 60A1 | 6 | T3 | 18'-11" | 6 | 28.41 | 170 | | | | | | | | | | 2'-0" | 5'-4½" | |
| | 60A2 | 5 | 9 | 10'-9" | 5 | 11.21 | 56 | | 10'-9" | | | | | | 3'-9½" | | | 5'-11½" | 2'-8" |
| | 60A3 | 5 | 12 | 7'-4" | 5 | 7.65 | 38 | | | 4'-7" | 2'-9" | | | | 2'-4⅜" | | 17" | | |
| | 60A4 | 5 | D10 | 8'-1⅜" | 12 | 8.46 | 102 | 2'-3" | 3'-6" | 23½" | 4⅞" | 23½" | 14" | | 16⅝" | | 16⅝" | | |
| | 60A5 | 5 | 12 | 9'-4" | 5 | 9.74 | 49 | | 2'-0" | 4'-7" | 2'-9" | | | | 2'-4⅜" | | 17" | | |
| | 60A6 | 5 | T3 | 15'-1" | 3 | 15.74 | 47 | | | | | | | | | | 20" | 4'-3¼" | |
| | 60A7 | 4 | STR. | 5'-8" | 27 | 3.79 | 102 | | | | | | | | | | | | |
| | TOTAL | | | | | | 564 | | | | | | | | | | | | |
| 54" DIA. | 54A1 | 6 | T3 | 17'-4" | 6 | 26.04 | 156 | | | | | | | | | | 2'-0" | 4'-10½" | |
| | 54A2 | 5 | 9 | 9'-5½" | 5 | 9.87 | 49 | | 9'-5½" | | | | | | 3'-3¾" | | | 4'-5½" | 2'-5" |
| | 54A3 | 5 | 12 | 6'-8" | 5 | 6.95 | 28 | | | 4'-2" | 2'-6" | | | | 2'-1¾" | | 15½" | | |
| | 54A4 | 5 | D10 | 7'-2⅞" | 12 | 7.55 | 91 | 2'-0" | 3'-7" | 4⅞" | 20⅝" | 12⅜" | | | 10⅝" | | 10⅝" | | |
| | 54A5 | 5 | 12 | 8'-8" | 5 | 9.04 | 45 | | 2'-0" | 4'-2" | 2'-6" | | | | 2'-1¾" | | 15½" | | |
| | 54A6 | 5 | T3 | 15'-1" | 3 | 15.74 | 47 | | | | | | | | | | 20" | 4'-3¼" | |
| | 54A7 | 4 | STR. | 5'-8" | 25 | 3.79 | 95 | | | | | | | | | | | | |
| | TOTAL | | | | | | 511 | | | | | | | | | | | | |
| 48" DIA. | 48A1 | 6 | T3 | 15'-9" | 6 | 23.66 | 142 | | | | | | | | | | 2'-0" | 4'-4½" | |
| | 48A2 | 5 | 9 | 8'-0½" | 5 | 8.39 | 42 | | 8'-0½" | | | | | | 2'-9½" | | | 4'-2" | 2'-2" |
| | 48A3 | 5 | 12 | 5'-9" | 5 | 6.00 | 30 | | | 3'-8" | 2'-1" | | | | 21⅜" | | 12¾" | | |
| | 48A4 | 5 | D10 | 6'-5½" | 12 | 6.74 | 81 | 2'-0" | 3'-7½" | 5⅛" | 4⅞" | 17" | 17" | | 3⅝" | | 3⅝" | | |
| | 48A5 | 5 | 12 | 7'-6" | 5 | 7.82 | 39 | | 21" | 3'-8" | 2'-1" | | | | 21⅜" | | 12¾" | | |
| | 48A6 | 5 | T3 | 15'-1" | 3 | 17.74 | 47 | | | | | | | | | | 20" | 4'-3¼" | |
| | 48A7 | 4 | STR. | 5'-8" | 22 | 3.79 | 83 | | | | | | | | | | | | |
| | TOTAL | | | | | | 464 | | | | | | | | | | | | |
| 42" DIA. | 42A1 | 6 | T3 | 14'-2" | 6 | 21.28 | 128 | | | | | | | | | | 2'-0" | 3'-10½" | |
| | 42A2 | 5 | 9 | 7'-6" | 4 | 7.82 | 31 | | 7'-6" | | | | | | 2'-9" | | | 3'-3" | 23" |
| | 42A3 | 5 | 12 | 5'-4" | 4 | 5.56 | 22 | | | 3'-3" | 2'-1" | | | | 22¼" | | 13½" | | |
| | 42A4 | 5 | 12 | 6'-4" | 5 | 6.61 | 33 | | 14" | 3'-6" | 20" | | | | 17¼" | | 10¼" | | |
| | 42A5 | 5 | 12 | 7'-1" | 5 | 7.39 | 37 | | 21" | 3'-3" | 2'-1" | | | | 21½" | | 12⅞" | | |
| | 42A6 | 5 | T3 | 11'-11" | 3 | 12.43 | 37 | | | | | | | | | | 20" | 3'-3¼" | |
| | 42A7 | 5 | 12 | 6'-8" | 5 | 6.95 | 35 | | 18" | 3'-6" | 20" | | | | 17¼" | | 10¼" | | |
| | 42A8 | 4 | STR. | 4'-8" | 21 | 3.12 | 66 | | | | | | | | | | | | |
| | TOTAL | | | | | | 389 | | | | | | | | | | | | |
| 36" DIA. | 36A1 | 6 | T3 | 12'-7" | 6 | 18.90 | 113 | | | | | | | | | | 2'-0" | 3'-4½" | |
| | 36A2 | 5 | 9 | 6'-0" | 4 | 6.26 | 25 | | 6'-0" | | | | | | 2'-2" | | | 3'-0" | 20" |
| | 36A3 | 5 | 12 | 4'-6" | 4 | 4.69 | 19 | | | 2'-9" | 21" | | | | 18" | | 10¾" | | |
| | 36A4 | 5 | 12 | 5'-0" | 5 | 5.22 | 26 | | 7" | 3'-0" | 17" | | | | 14½" | | 8¾" | | |
| | 36A5 | 5 | 12 | 5'-9" | 5 | 6.00 | 30 | | 15" | 2'-9" | 21" | | | | 18" | | 10¾" | | |
| | 36A6 | 5 | T3 | 11-11" | 3 | 12.43 | 37 | | | | | | | | | | 20" | 3'-3¼" | |
| | 36A7 | 5 | 12 | 5'-8" | 5 | 5.91 | 30 | | 15" | 3'-0" | 17" | | | | 14½" | | 8¾" | | |
| | 36A8 | 4 | STR. | 4'-8" | 18 | 3.12 | 56 | | | | | | | | | | | | |
| | TOTAL | | | | | | 336 | | | | | | | | | | | | |
| 30" DIA. | 30A1 | 6 | T3 | 11'-1" | 6 | 16.65 | 100 | | | | | | | | | | 2'-0" | 2'-10½" | |
| | 30A2 | 5 | 9 | 4'-4" | 4 | 4.52 | 18 | | 4'-4" | | | | | | 18" | | | 2'-10" | 17" |
| | 30A3 | 5 | 12 | 4'-0" | 4 | 4.17 | 17 | | | 2'-3" | 21" | | | | 18" | | 10¾" | | |
| | 30A4 | 5 | 12 | 3'-10" | 5 | 4.00 | 20 | | | 2'-7" | 15" | | | | 12¾" | | 7¾" | | |
| | 30A5 | 5 | 12 | 5'-3" | 5 | 5.48 | 27 | | 15" | 2'-3" | 21" | | | | 18" | | 10¾" | | |
| | 30A6 | 5 | T3 | 11'-11" | 3 | 12.43 | 37 | | | | | | | | | | 20" | 3'-3¼" | |
| | 30A7 | 5 | 12 | 5'-1" | 5 | 5.30 | 26 | | 15" | 2'-7" | 15" | | | | 12¾" | | 7¾" | | |
| | 30A8 | 4 | STR | 4'-8" | 15 | 3.12 | 47 | | | | | | | | | | | | |
| | TOTAL | | | | | | 292 | | | | | | | | | | | | |
| 24" DIA. | 24A1 | 6 | 9 | 3'-5" | 6 | 5.13 | 31 | | 3'-5" | | | | | | 13" | | | 2'-3½" | 14¼" |
| | 24A2 | 6 | T3 | 9'-4" | 7 | 14.02 | 98 | | | | | | | | | | 22" | 2'-4¼" | |
| | 24A3 | 5 | 12 | 3'-6" | 10 | 3.65 | 37 | | | 2'-1" | 17" | | | | 14½" | | 8¾" | | |
| | 24A4 | 5 | 12 | 4'-9" | 10 | 4.96 | 50 | | 15" | 2'-1" | 17" | | | | 14½" | | 8¾" | | |
| | 24A5 | 5 | T3 | 11'-11" | 3 | 12.43 | 37 | | | | | | | | | | 20" | 3'-3¼" | |
| | 24A6 | 4 | STR. | 4'-8" | 12 | 3.12 | 37 | | | | | | | | | | | | |
| | TOTAL | | | | | | 290 | | | | | | | | | | | | |

STRUCTURAL NOTES:

PLACING OF CONCRETE- CONCRETE MUST BE PLACED IN ACCORDANCE WITH THE METHOD OUTLINED IN THE CITY OF CHICAGO STANDARD SPECIFICATIONS.
CONSTRUCTION JOINTS - JOINTS NOT INDICATED ON THE DRAWINGS MUST BE SO MADE AND LOCATED AS NOT TO IMPAIR THE STRENGTH OF THE STRUCTURE AND MUST BE APPROVED BY THE COMMISSIONER. JOINTS MUST BE CONSTRUCTED IN ACCORDANCE WITH THE METHOD OUTLINED IN THE SPECIFICATIONS.

CONCRETE PROTECTION FOR REINFORCEMENT- ALL REINFORCING STEEL MUST HAVE CLEAR CONCRETE COVERING AS FOLLOWS (UNLESS OTHERWISE NOTED) :
3" AT EXTERIOR SURFACES WHERE CONCRETE IS DEPOSITED AGAINST THE GROUND;
2.5" AT SURFACES WHERE CONCRETE IS FORMED BUT SUBSEQUENTLY WILL BE IN CONTACT WITH SEWAGE; 2" AT ALL OTHER SURFACES.

REINFORCING STEEL- ALL REINFORCING BARS MUST BE ACCURATELY PLACED AND SECURELY SUPPORTED BY BAR SUPPORTS, SPACERS OR HIGH CHAIRS.
ALL LAPS IN REINFORCING STEEL MUST BE BASED UPON THE 1989, ACI BUILDING CODE.
UNLESS OTHERWISE NOTED, HOOKS AND BENDS ON BARS MUST CONFORM TO RECOMMENDED DETAILS AS GIVEN IN THE "MANUAL OF STANDARD PRACTICE", C.R.S.I. 1990.

THE FOLLOWING ABBREVIATIONS ARE USED TO INDICATE THE LOCATION OF REINFORCING BARS:

| | | | | | |
|---|---|---|---|---|---|
| T. | DENOTES | TOP | N.F. | DENOTES | NEAR FACE |
| BOT. | DENOTES | BOTTOM | F.F. | DENOTES | FAR FACE |
| I.F. | DENOTES | INSIDE FACE | E.F. | DENOTES | EACH FACE |
| O.F. | DENOTES | OUTSIDE FACE | E.W. | DENOTES | EACH WAY |

PLACING BAR SUPPORTS- ALL REINFORCING BARS MUST BE SUPPORTED, ANCHORED AND TIED AND MUST CONFORM TO THE "RECOMMENDED PRACTICE FOR PLACING REINFORCING BARS", 1986, PREPARED BY THE CONCRETE REINFORCING STEEL INSTITUTE.

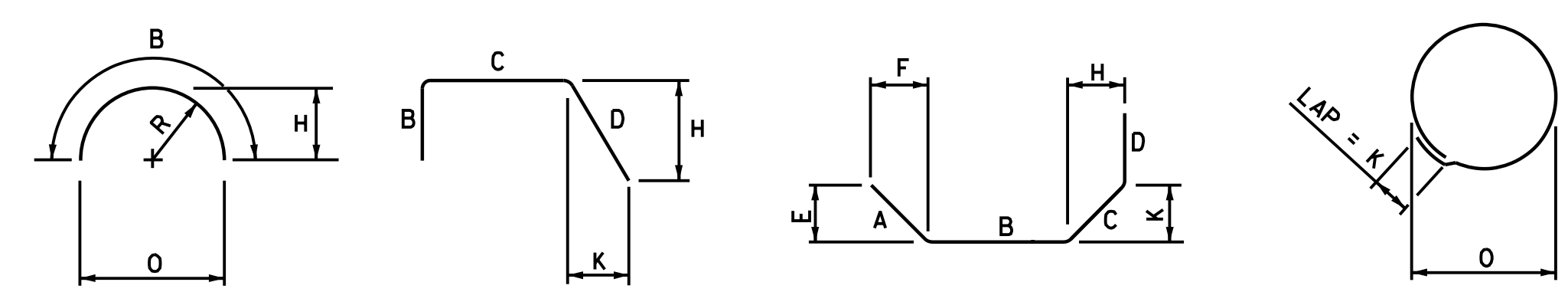


9 12 D10 T3

NOTES:
ALL DIMENSIONS ARE OUT TO OUT OF BAR.

BENDING RADII "R" TO OUTSIDE OF BAR.

NUMBERS IN CIRCLES DENOTE BAR TYPE.

| STANDARD REVISIONS | |
|---|---|
| DATE | DESCRIPTION |
| 1/5/15 | APPROVED PLAN |

| PERCENT COMPLETE | DATE |
|---|---|
| 30 | |
| 60 | |
| 75 | |
| 90 | |
| 100 | |
| BULLETIN | |

CITY OF CHICAGO
DEPARTMENT OF WATER MANAGEMENT
BUREAU OF ENGINEERING SERVICES

REINFORCEMENT BAR LIST FOR TYPE "A" PRECAST MANHOLE BASES

DRAWN: SBW
DESIGNED:
CHECKED:
REVIEWED:

A.7

OF

PN

| DESIGN: | MSA |
|---|---|
| DRAWN: | MSA |
| CHECKED: | TKL |
| APPROVED: | |
| DATE: 01/22/2021 | |

| NO. | BY | DATE | DESCRIPTION |
|---|---|---|---|
| REVISIONS | | | |

CDOT CHICAGO DEPARTMENT OF TRANSPORTATION
C*NECT

DRAINAGE DETAIL
DWM STANDARD DRAWING

JACKSON PARK MOBILITY IMPROVEMENTS

STA. TO STA.

CONTRACT NO. -
PROJECT NO. B-7-203
SCALE:

TOTAL SHEETS 1434
SHEET NO. 527
DRAWING NO. DD-12

PLOT DATE: 5/17/2021
PLOT SCALE: 40.0000 ' / in.
FILE NAME: pw:\\CIVIL-PW-INT.civiltech.local:Civiltech Projects\Documents\Projects\3153\CAD\Sheets\Detail Sheets\Drainage\sht-dtl-d-007.dgn

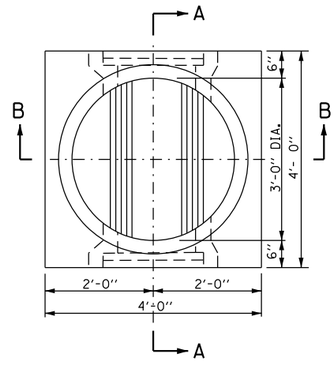


PLAN

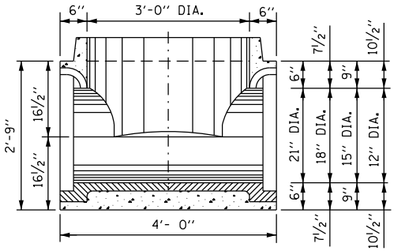


SECTION A-A

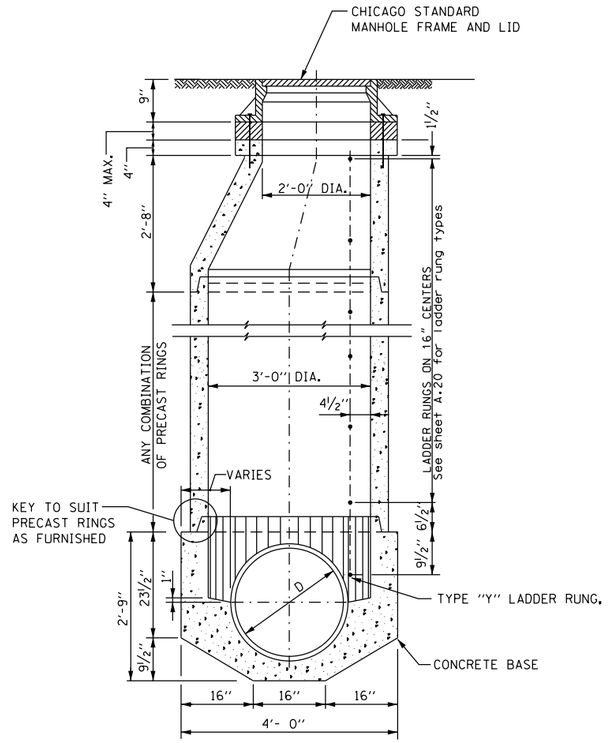


SECTION B-B

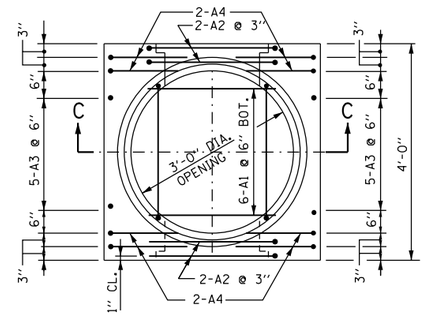


PLAN
PRECAST BASE

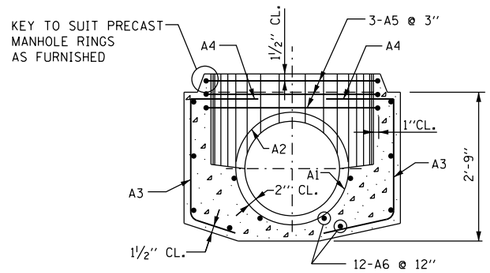


SECTION C-C

NOTE:
6'' MINIMUM GRANULAR EMBEDMENT
UNDER ALL PRECAST MANHOLE BASES

## SCHEDULE OF REINFORCEMENT

| STRUCTURE | | REINFORCEMENT BAR | | | | | | BENDING DIMENSIONS | | | | | | | | | | | |
|---|---|---|---|---|---|---|---|---|---|---|---|---|---|---|---|---|---|---|---|
| | | MARK | SIZE NO. | TYPE | LENGTH | NO. REQD. | WEIGHT - LBS EACH | WEIGHT - LBS TOTAL | A | B | C | D | E | F | G | H | J | K | O | R |
| BASES FOR TYPE ''A'' MANHOLES (PRECAST) | 21'' DIA. | 21A1 | 6 | 9 | 3'-1'' | 6 | 4.63 | 28 | | 3'-1'' | | | | | | | 11¼'' | | | 2'-1'' | 12¾'' |
| | | 21A2 | 6 | T3 | 8'-8'' | 4 | 13.02 | 52 | | | | | | | | | | 2'-0'' | 2'-1½'' | |
| | | 21A3 | 5 | 12 | 3'-3'' | 10 | 3.39 | 34 | | | 22'' | 17'' | | | | 14½'' | | 8¾'' | | |
| | | 21A4 | 5 | 12 | 4'-6'' | 8 | 4.69 | 38 | | 15'' | 22'' | 17'' | | | | 14½'' | | 8¾'' | | |
| | | 21A5 | 5 | T3 | 11'-11'' | 3 | 12.43 | 37 | | | | | | | | | | 20'' | 3'-3¼'' | |
| | | 21A6 | 4 | STR | 3'-8'' | 12 | 2.45 | 30 | | | | | | | | | | | | |
| | | TOTAL | | | | | | 219 | | | | | | | | | | | | |
| | 18'' DIA. | 18A1 | 6 | 9 | 2'-8½'' | 6 | 4.07 | 24 | | 2'-8½'' | | | | | | | 9¾'' | | 22'' | 11¼'' |
| | | 18A2 | 6 | T3 | 7'-10½'' | 4 | 11.83 | 47 | | | | | | | | | | 2'-0'' | 22½'' | |
| | | 18A3 | 5 | 12 | 3'-3'' | 10 | 3.39 | 34 | | | 22'' | 17'' | | | | | 14½'' | 8¾'' | | |
| | | 18A4 | 5 | 12 | 4'-6'' | 8 | 4.69 | 38 | | 15'' | 22'' | 17'' | | | | | 14½'' | 8¾'' | | |
| | | 18A5 | 5 | T3 | 11'-11'' | 3 | 12.43 | 37 | | | | | | | | | | 2'-0'' | 3'-3¼'' | |
| | | 18A6 | 4 | STR | 3-8'' | 12 | 2.45 | 30 | | | | | | | | | | | | |
| | | TOTAL | | | | | | 202 | | | | | | | | | | | | |
| | 15'' DIA. | 15A1 | 6 | 9 | 2'-3½'' | 6 | 3.44 | 21 | | 23½'' | | | | | | | 8¼'' | | 19'' | 9¾'' |
| | | 15A2 | 6 | T3 | 7'-1'' | 4 | 10.64 | 42 | | | | | | | | | | 2'-0'' | 19½'' | |
| | | 15A3 | 5 | 12 | 3'-3'' | 10 | 3.39 | 34 | | | 22'' | 17'' | | | | | | 8¾'' | | |
| | | 15A4 | 5 | 12 | 4'-6'' | 8 | 4.69 | 38 | | 15'' | 22'' | 17'' | | | | 14½'' | | 8¾'' | | |
| | | 15A5 | 5 | T3 | 11'-11'' | 3 | 12.43 | 37 | | | | | | | | 14½'' | | 20'' | 3'-3¾'' | |
| | | 15A6 | 4 | STR | 3'-8'' | 12 | 2.45 | 30 | | | | | | | | | | | | |
| | | TOTAL | | | | | | 202 | | | | | | | | | | | | |
| | 12'' DIA. | 12A1 | 6 | 9 | 1'-11'' | 6 | 2.88 | 17 | | 23'' | | | | | | | 6¾'' | | 16'' | 8¼'' |
| | | 12A2 | 6 | T3 | 6'-1'' | 4 | 9.14 | 37 | | | | | | | | | | 2'-0'' | 16½'' | |
| | | 12A3 | 5 | 12 | 3'-3'' | 10 | 3.39 | 34 | | | 22'' | 17'' | | | | 14½'' | | 8¾'' | | |
| | | 12A4 | 5 | 12 | 4'-6'' | 8 | 4.69 | 38 | | | 22'' | 17'' | | | | 14½'' | | 8¾'' | | |
| | | 12A5 | 5 | T3 | 11'-11'' | 3 | 12.43 | 37 | | | | | | | | | | 20'' | 3'-3¼'' | |
| | | 12A6 | 4 | STR. | 3'-8'' | 12 | 2.45 | 30 | | | | | | | | | | | | |
| | | TOTAL | | | | | | 193 | | | | | | | | | | | | |

| STANDARD REVISIONS | |
|---|---|
| DATE | DESCRIPTION |
| 1/5/15 | REVISION |
| | |
| | |
| | |
| | |

| PERCENT COMPLETE | DATE |
|---|---|
| 30 | |
| 60 | |
| 75 | |
| 90 | |
| 100 | |
| BULLETIN | |

**CITY OF CHICAGO**
DEPARTMENT OF WATER MANAGEMENT
BUREAU OF ENGINEERING SERVICES

TYPE ''A'' PRECAST
MANHOLE FOR SEWERS
21'' DIA. AND SMALLER

DRAWN: SBW
DESIGNED:
CHECKED:
REVIEWED:

A.8

OF

PN

| | | | | | |
|---|---|---|---|---|---|
| DESIGN: MSA | | | | | |
| DRAWN: MSA | | | | | |
| CHECKED: TKL | | | | | |
| APPROVED: | NO. | BY | DATE | DESCRIPTION | |
| DATE: 01/22/2021 | REVISIONS | | | | |

CHICAGO DEPARTMENT OF TRANSPORTATION

C*NECT

DRAINAGE DETAIL
DWM STANDARD DRAWING

JACKSON PARK MOBILITY IMPROVEMENTS

STA. TO STA.

| CONTRACT NO. | TOTAL SHEETS | SHEET NO. |
|---|---|---|
| - | 1434 | 528 |
| PROJECT NO. B-7-203 | DRAWING NO. DD-13 | |
| SCALE: | | |

PLOT DATE: 5/17/2021
PLOT SCALE: 40.0000 ' / in.
FILE NAME: pw:\\CITYIL-PWJNT.civiltech.local:CivilTech Projects\Documents\Projects\3153\CADD\Sheets\Detail Sheets\Drainage\tbl-tl-d08.dgn

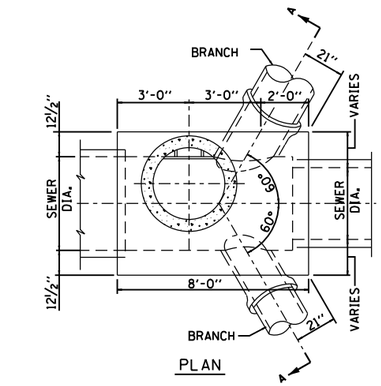


PLAN

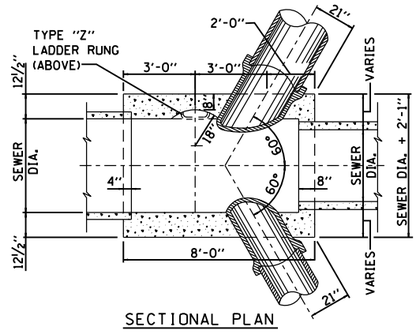


SECTIONAL PLAN

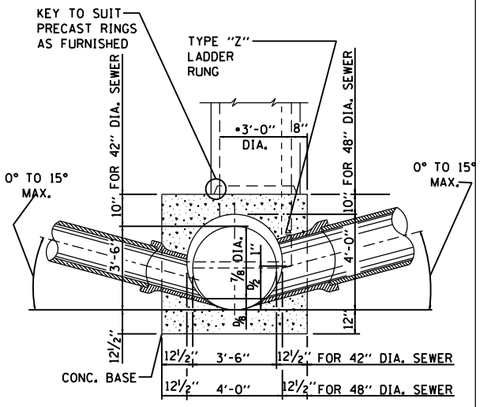


SECTION A-A

## TYPE "B" MANHOLE FOR SEWERS 48" DIA. & 42" DIA.

Not To Scale

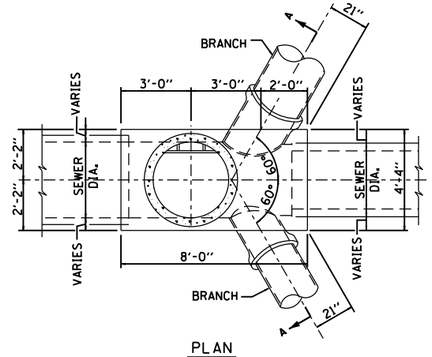


PLAN

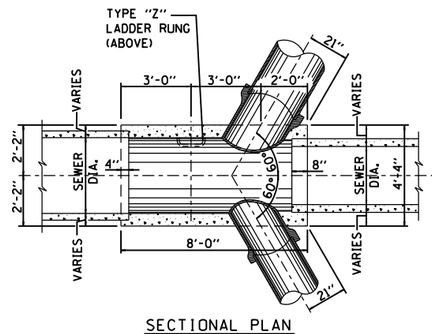


SECTIONAL PLAN

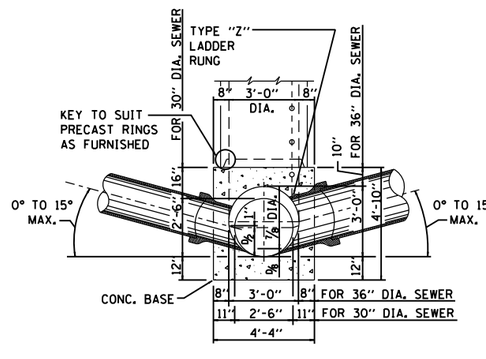


SECTION A-A

## TYPE "B" MANHOLE FOR SEWERS 36" DIA. & 30" DIA.

Not To Scale

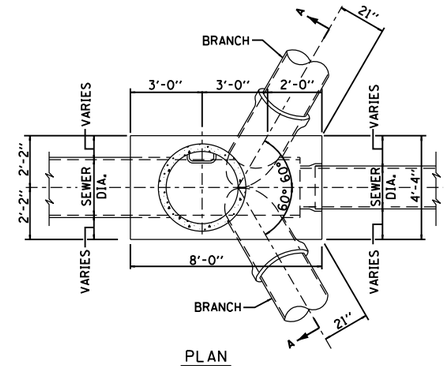


PLAN

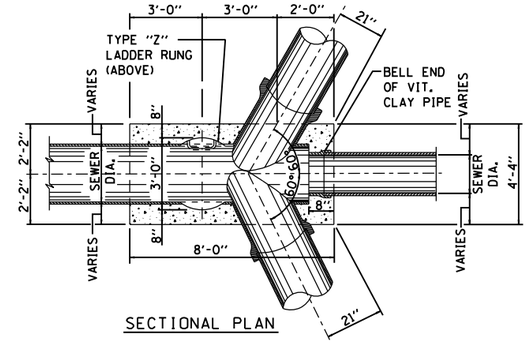


SECTIONAL PLAN

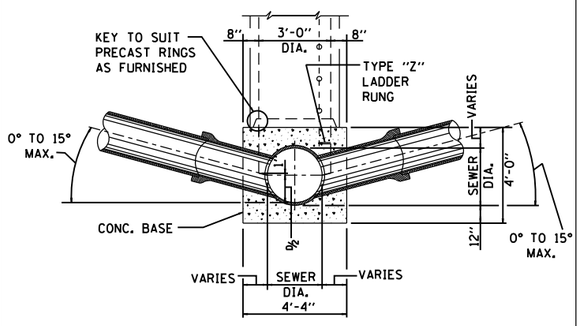


SECTION A-A

## TYPE "B" MANHOLE FOR SEWERS 24" DIA. & SMALLER

Not To Scale

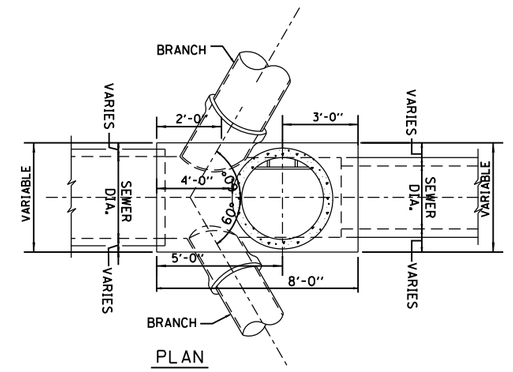


PLAN

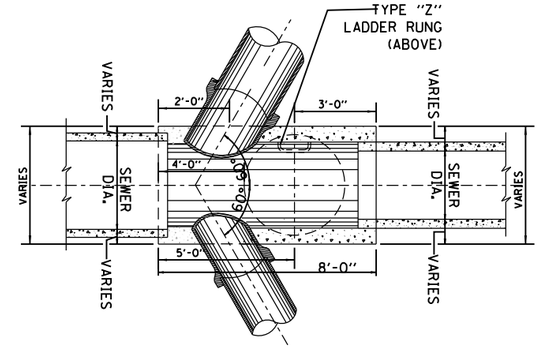


SECTIONAL PLAN

## TYPICAL REVERSE TYPE "B" MANHOLE

Not To Scale

NOTES:
1. CONTRACTOR MUST SUBMIT SHOP DRAWINGS OF ALL PROPOSED MANHOLE CONFIGURATIONS FOR APPROVAL PRIOR TO SUBMISSION OF MATERIAL ORDERS.

2. CONNECTION BELLS MAY BE INSTALLED AT MANUFACTURER'S SITE, OR MORTARED IN PLACE IN THE FIELD. SEE SHEET A.11 FOR FURTHER CONFIGURATION DETAILS.

3. BASES MUST BE PRECAST WITH THE CORRECT NUMBER OF PIPE OPENINGS, CORRESPONDING TO THE REPRESENTATION IN THE PLAN AND PROFILE SHEETS.

4. PATCHING, BRICKING, OR OTHER MATERIAL METHODS OF CLOSING UNUSED HOLES WILL NOT BE ACCEPTED.

5. 6" MINIMUM GRANULAR EMBEDMENT UNDER ALL PRECAST MANHOLE BASES

| STANDARD REVISIONS | |
|---|---|
| DATE | DESCRIPTION |
| 1/5/15 | APPROVED PLAN |
| | |
| | |
| | |
| | |

| PERCENT COMPLETE | DATE |
|---|---|
| 30 | |
| 60 | |
| 75 | |
| 90 | |
| 100 | |
| BULLETIN | |

**CITY OF CHICAGO**
DEPARTMENT OF WATER MANAGEMENT
BUREAU OF ENGINEERING SERVICES

TYPE "B" MANHOLE

DRAWN: SBW
DESIGNED:
CHECKED:
REVIEWED:

A.9

OF

PN

| | | | | |
|---|---|---|---|---|
| DESIGN: MSA | | | | |
| DRAWN: MSA | | | | |
| CHECKED: TKL | | | | |
| APPROVED: | NO. | BY | DATE | DESCRIPTION |
| DATE: 01/22/2021 | REVISIONS | | | |

CDOT CHICAGO DEPARTMENT OF TRANSPORTATION

C*NECT

DRAINAGE DETAIL
DWM STANDARD DRAWING

JACKSON PARK MOBILITY IMPROVEMENTS

STA. TO STA.

| | |
|---|---|
| CONTRACT NO. | - |
| PROJECT NO. | B-7-203 |
| SCALE: | |

| TOTAL SHEETS | SHEET NO. |
|---|---|
| 1434 | 529 |

DRAWING NO. DD-14

PLOT DATE: 5/17/2021
PLOT SCALE: 40.0000 ' / in.
FILE NAME: pw:\\CIVIL-PW-INT.dsitech.local:CivilTech Projects\Documents\Projects\3153\CADSheets\Detail Sheets\Drainage\sht-dtl-d409.dgn

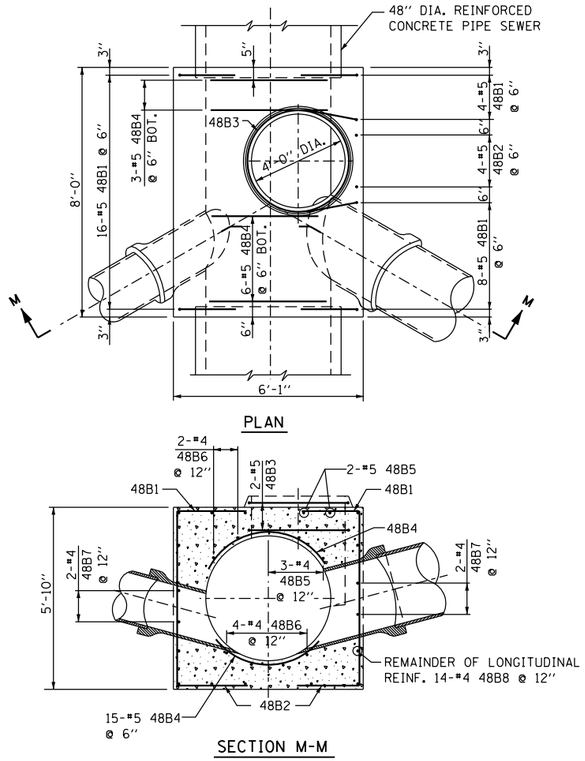


## 48" DIA. SEWER

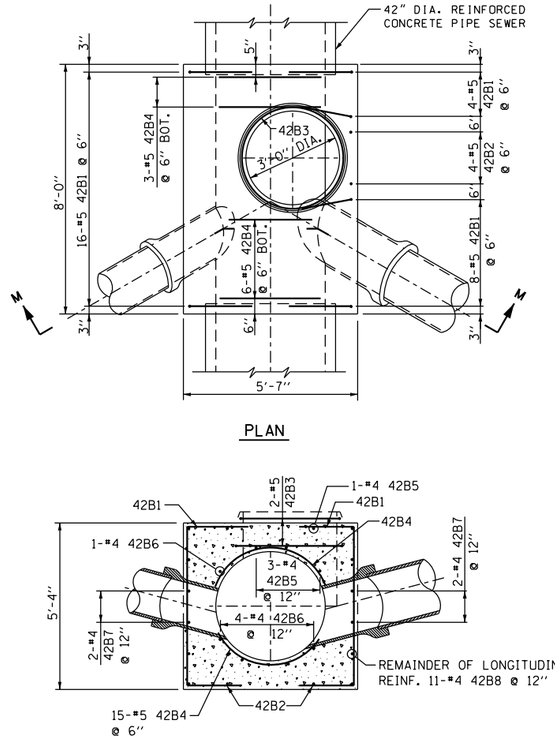


## 42" DIA. SEWER

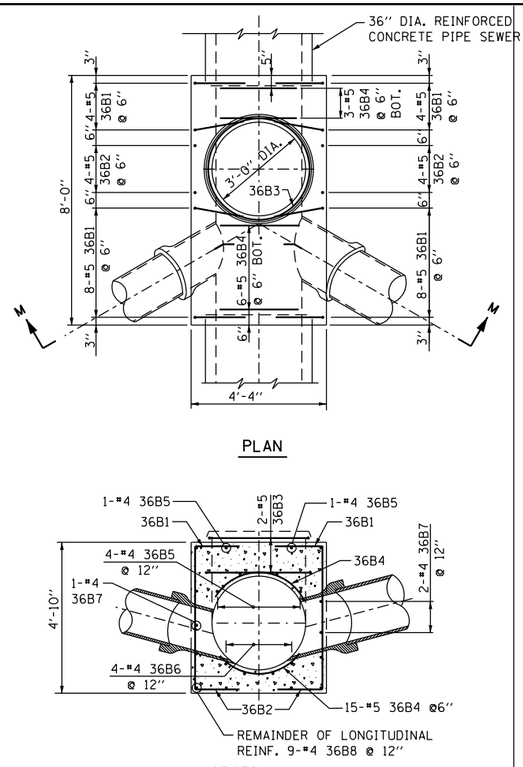


## 36" DIA. SEWER

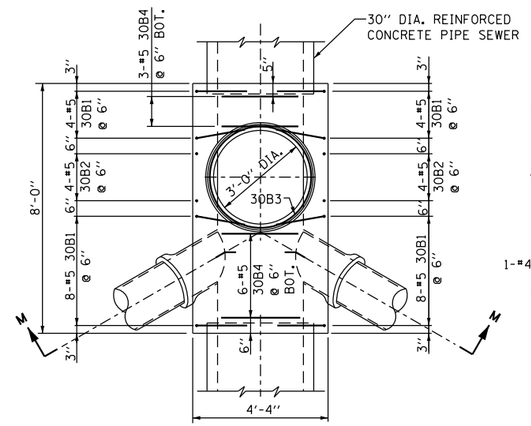


## 30" DIA. SEWER

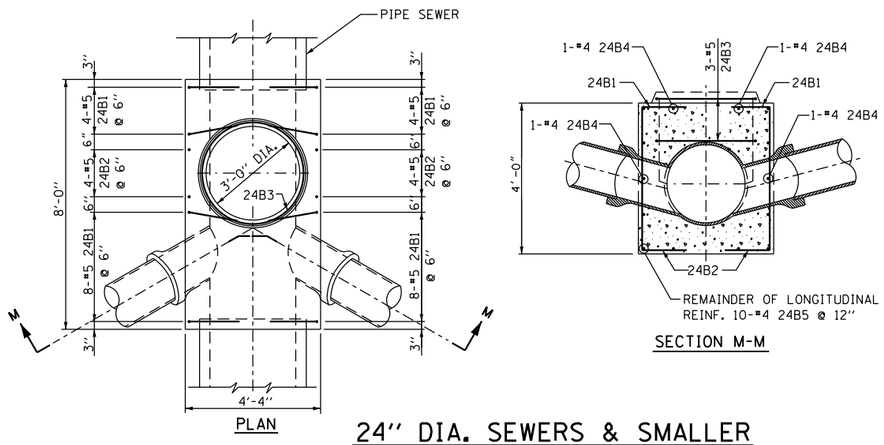


## 24" DIA. SEWERS & SMALLER

NOTES:
1. CONTRACTOR MUST SUBMIT SHOP DRAWINGS OF ALL PROPOSED MANHOLE CONFIGURATIONS FOR APPROVAL PRIOR TO SUBMISSION OF MATERIAL ORDERS.

2. CONNECTION BELLS MAY BE INSTALLED AT MANUFACTURER'S SITE, OR MORTARED IN PLACE IN THE FIELD. SEE SHEET A.11 FOR FURTHER CONFIGURATION DETAILS.

3. BASES MUST BE PRECAST WITH THE CORRECT NUMBER OF PIPE OPENINGS, CORRESPONDING TO THE REPRESENTATION IN THE PLAN AND PROFILE SHEETS.

4. PATCHING, BRICKING, OR OTHER MATERIAL METHODS OF CLOSING UNUSED HOLES WILL NOT BE ACCEPTED.

| STANDARD REVISIONS | |
|---|---|
| DATE | DESCRIPTION |
| 1/5/15 | revision |
| | |
| | |
| | |
| | |

| PERCENT COMPLETE | DATE |
|---|---|
| 30 | |
| 60 | |
| 75 | |
| 90 | |
| 100 | |
| BULLETIN | |

**CITY OF CHICAGO**
DEPARTMENT OF WATER MANAGEMENT
BUREAU OF ENGINEERING SERVICES

REINFORCEMENT FOR TYPE "B" MANHOLE BASES

DRAWN: SB#
DESIGNED:
CHECKED:
REVIEWED:

A.10

OF

PN

| | | | | |
|---|---|---|---|---|
| DESIGN: MSA | | | | |
| DRAWN: MSA | | | | |
| CHECKED: TKL | | | | |
| APPROVED: | NO. | BY | DATE | DESCRIPTION |
| DATE: 01/22/2021 | REVISIONS | | | |

CDOT CHICAGO DEPARTMENT OF TRANSPORTATION

C*NECT

DRAINAGE DETAIL
DWM STANDARD DRAWING

JACKSON PARK MOBILITY IMPROVEMENTS

STA. TO STA.

| CONTRACT NO. | TOTAL SHEETS | SHEET NO. |
|---|---|---|
| - | 1434 | 530 |
| PROJECT NO. B-7-203 | DRAWING NO. DD-15 | |
| SCALE: | | |

PLOT DATE: 5/17/2021
PLOT SCALE: 40.0000 ' / in.
FILE NAME: pw:\\CIVIL-PW-INT.cdwltech.local:CivilTech Projects\Documents\Projects\3133\CADSheets\Detail Sheets\Drainage\dsht-dtl-2016.dgn

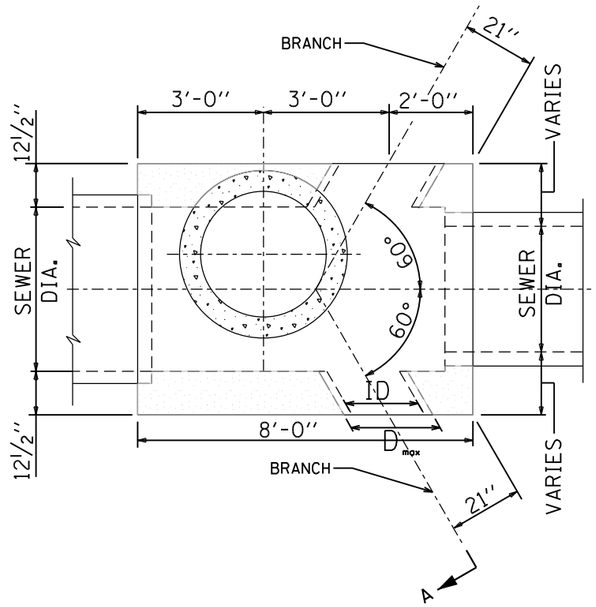


TYPICAL 4 OPENING TYPE B MANHOLE

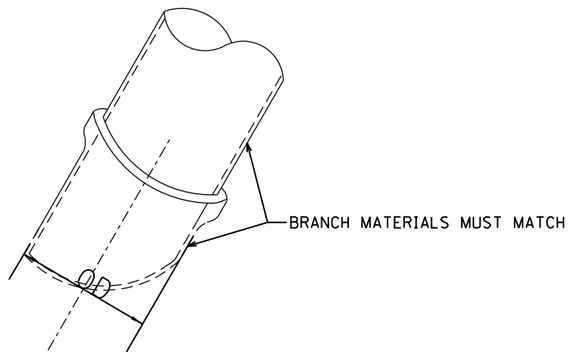


NOTES:
1. CONTRACTOR MUST SUBMIT SHOP DRAWINGS OF ALL PROPOSED MANHOLE CONFIGURATIONS FOR APPROVAL PRIOR TO SUBMISSION OF MATERIAL ORDERS.

2. CONNECTION BELLS MAY BE INSTALLED AT MANUFACTURER'S SITE, OR MORTARED IN PLACE IN THE FIELD.

3. BASES MUST BE PRECAST WITH THE CORRECT NUMBER OF PIPE OPENINGS, CORRESPONDING TO THE REPRESENTATION IN THE PLAN AND PROFILE SHEETS.

4. PATCHING, BRICKING, OR OTHER MATERIAL METHODS OF CLOSING UNUSED HOLES WILL NOT BE ACCEPTED.

BRANCH SIZING CHART

| ID PIPE (in.) | MATERIAL | OD PIPE (in.) | D max* (in.) |
|---|---|---|---|
| 12 | VCP | 14.36 | 18.36 |
| 15 | VCP | 17.8 | 21.8 |
| 18 | VCP | 21.48 | 25.48 |
| 21 | VCP | 25.54 | 31.54 |
| 8 | DIP | 9.05 | 13.05 |
| 10 | DIP | 11.1 | 15.1 |
| 12 | DIP | 13.2 | 17.2 |
| 14 | DIP | 15.3 | 19.3 |
| 16 | DIP | 17.4 | 21.4 |
| 18 | DIP | 19.5 | 23.5 |
| 20 | DIP | 21.6 | 25.6 |
| 24 | DIP | 25.8 | 29.8 |
| 24 | RCP III | 30 | 34 |
| 27 | RCP III | 33.5 | 37.5 |
| 30 | RCP III | 37 | 41 |
| 33 | RCP III | 40.5 | 44.5 |
| 36 | RCP III | 44 | 48 |
| 42 | RCP III | 51 | 55 |
| Notes: | | | |
| 1. If the pipe class is not shown on this table, then D max =OD pipe + 4" | | | |
| *2. Dmax indicates the maximum size of branch opening to be cast or cut into structure. | | | |

| STANDARD REVISIONS | |
|---|---|
| DATE | DESCRIPTION |
| 12/28/15 | APPROVED PLAN |

| PERCENT COMPLETE | DATE |
|---|---|
| 30 | |
| 60 | |
| 75 | |
| 90 | |
| 100 | |
| BULLETIN | |

CITY OF CHICAGO
DEPARTMENT OF WATER MANAGEMENT
BUREAU OF ENGINEERING SERVICES

TYPE "B" MANHOLE CONFIGURATIONS

DRAWN: SBW
DESIGNED:
CHECKED:
REVIEWED:

A.11

OF

PN

| | | | | |
|---|---|---|---|---|
| DESIGN: MSA | | | | |
| DRAWN: MSA | | | | |
| CHECKED: TKL | | | | |
| APPROVED: | NO. | BY | DATE | DESCRIPTION |
| DATE: 01/22/2021 | REVISIONS | | | |

CDOT CHICAGO DEPARTMENT OF TRANSPORTATION

C*NECT

DRAINAGE DETAIL
DWM STANDARD DRAWING

JACKSON PARK MOBILITY IMPROVEMENTS

STA. TO STA.

CONTRACT NO. -
PROJECT NO. B-7-203
SCALE:

TOTAL SHEETS 1434
SHEET NO. 531
DRAWING NO. DD-16

PLOT DATE: 5/17/2021
PLOT SCALE: 40.0000 ' / in.
FILE NAME: pw:\\CIVIL-PW-INT.civiltech.local:Civiltech Projects\Documents\Projects\3153\CAD\Sheets\Detail Sheets\Drainage\sht-dtl-d-011.dgn

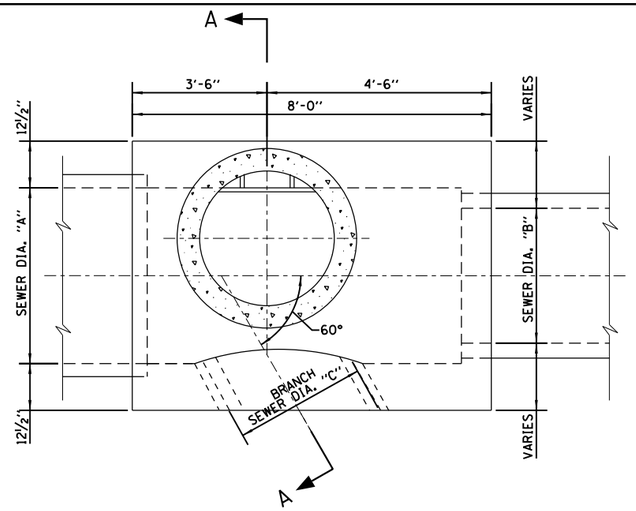


PLAN

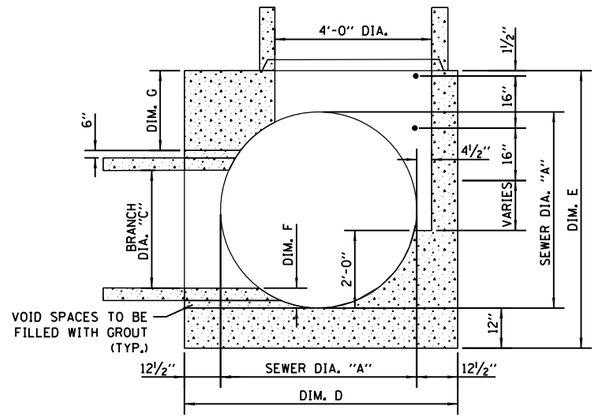


SECTION A-A

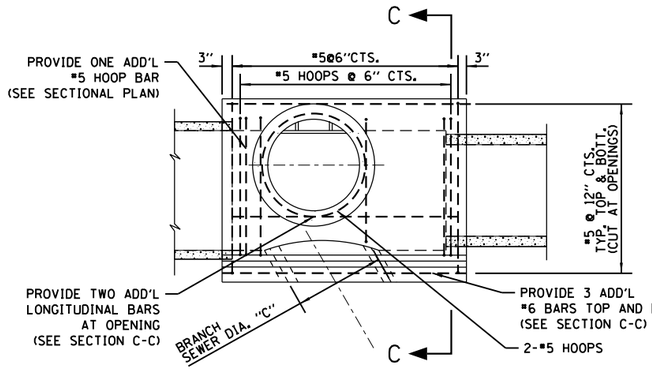


PLAN

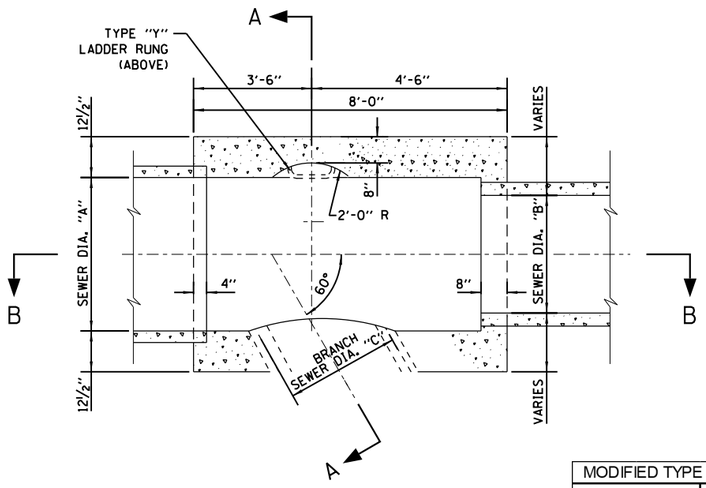


SECTIONAL PLAN

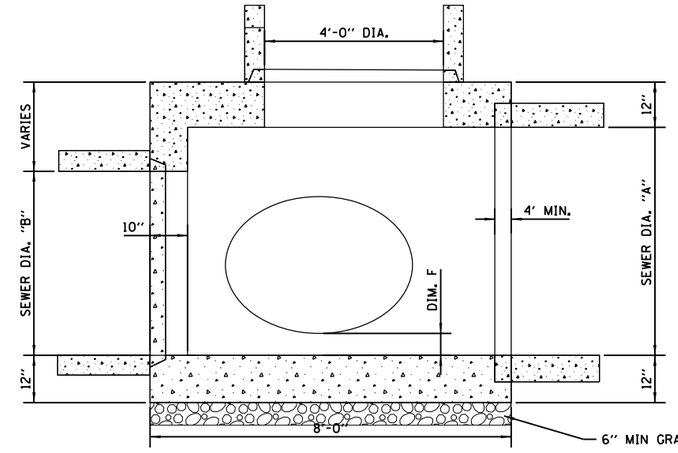


SECTION B-B

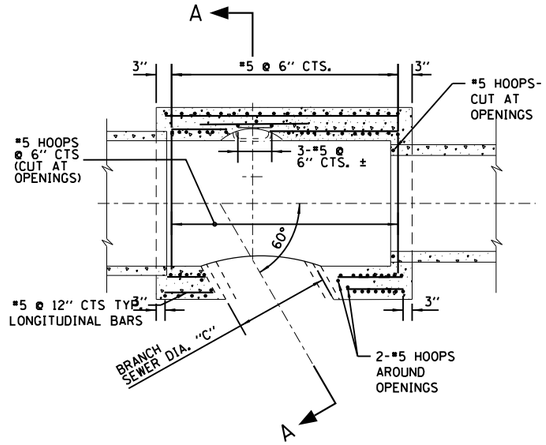


SECTIONAL PLAN

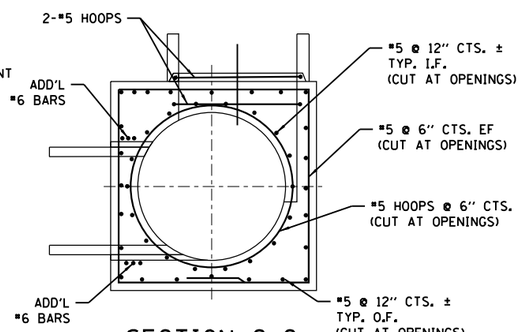


SECTION C-C

NOTES:
1. CONTRACTOR MUST SUBMIT SHOP DRAWINGS OF ALL PROPOSED MANHOLE CONFIGURATIONS FOR APPROVAL PRIOR TO SUBMISSION OF MATERIAL ORDERS.

2. CONNECTION BELLS MAY BE INSTALLED AT MANUFACTURER'S SITE, OR MORTARED IN PLACE IN THE FIELD. SEE SHEET A.11 FOR FURTHER CONFIGURATION DETAILS.

3. BASES MUST BE PRECAST WITH THE CORRECT NUMBER OF PIPE OPENINGS, CORRESPONDING TO THE REPRESENTATION IN THE PLAN AND PROFILE SHEETS.

4. PATCHING, BRICKING, OR OTHER MATERIAL METHODS OF CLOSING UNUSED HOLES WILL NOT BE ACCEPTED.

5. 6" MINIMUM GRANULAR EMBEDMENT UNDER ALL PRECAST MANHOLE BASES

| MODIFIED TYPE B MANHOLES | | FOR 42", 36", & 30" BRANCHES | | | | |
|---|---|---|---|---|---|---|
| SEWER SIZE | | BRANCH SIZE | DIMENSION | | | |
| A | B | C | D | E | F | G |
| 60 | 60 | 42 | 85 | 84 | 6 | 18 |
| 60 | 60 | 36 | 85 | 84 | 6 | 24 |
| 60 | 60 | 30 | 85 | 84 | 6 | 30 |
| 54 | 54 | 42 | 79 | 78 | 6 | 12 |
| 54 | 54 | 36 | 79 | 78 | 6 | 18 |
| 54 | 54 | 30 | 79 | 78 | 6 | 24 |
| 48 | 48 | 42 | 73 | 78 | 6 | 12 |
| 48 | 48 | 36 | 73 | 72 | 6 | 12 |
| 48 | 48 | 30 | 73 | 72 | 6 | 18 |
| 42 | 42 | 36 | 67 | 72 | 6 | 12 |
| 42 | 42 | 30 | 67 | 66 | 6 | 12 |
| 30 | 30 | 30 | 55 | 66 | 6 | 12 |

**ALL MEASUREMENTS ARE IN INCHES**

NOTE: WHEN B IS SMALLER THAN A, GAP SHALL BE FILLED WITH CONCRETE DURING CASTING.

SIMILAR REBAR DESIGN SHALL BE USE.

CONTRACTOR SHALL SUBMIT REBAR DETAILS FOR APPROVAL

IF BRANCH SEWER IS LESS THAN 36" DIA., ANGLE SHALL BE 45 DEGREES.

| STANDARD REVISIONS | |
|---|---|
| DATE | DESCRIPTION |
| 1/5/15 | REVISED |
| | |
| | |
| | |
| | |

| PERCENT COMPLETE | DATE |
|---|---|
| 30 | |
| 60 | |
| 75 | |
| 90 | |
| 100 | |
| BULLETIN | |

**CITY OF CHICAGO**
DEPARTMENT OF WATER MANAGEMENT
BUREAU OF ENGINEERING SERVICES

MODIFIED TYPE "B" MANHOLE

DRAWN: SBW
DESIGNED:
CHECKED: GD, GC, SO
REVIEWED:

A.12
OF
PN

| DESIGN: MSA | | | | |
|---|---|---|---|---|
| DRAWN: MSA | | | | |
| CHECKED: TKL | | | | |
| APPROVED: | NO. | BY | DATE | DESCRIPTION |
| DATE: 01/22/2021 | REVISIONS | | | |

CDOT CHICAGO DEPARTMENT OF TRANSPORTATION

C*NECT

DRAINAGE DETAIL
DWM STANDARD DRAWING

JACKSON PARK MOBILITY IMPROVEMENTS

STA. TO STA.

| CONTRACT NO. | TOTAL SHEETS | SHEET NO. |
|---|---|---|
| - | 1434 | 532 |
| PROJECT NO. B-7-203 | DRAWING NO. DD-17 | |
| SCALE: | | |

PLOT DATE: 5/17/2021
PLOT SCALE: 40.0000 ' / in.
FILE NAME: pw:\\CITYCIVIL-PW-INT-drultteech.local:CivilTech Projects\Documents\Projects\3153\CADSheets\Detail Sheets\Drainage\std-dtl-d12.dgn

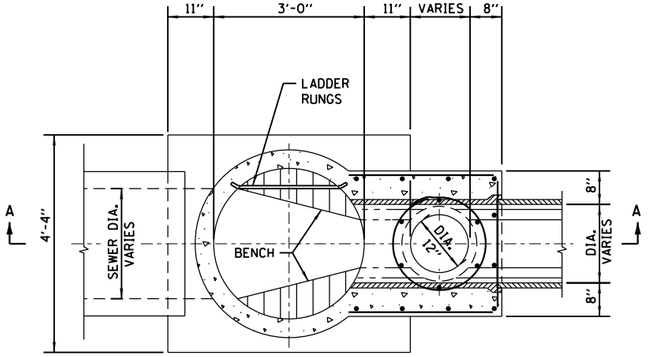


SECTIONAL PLAN-B

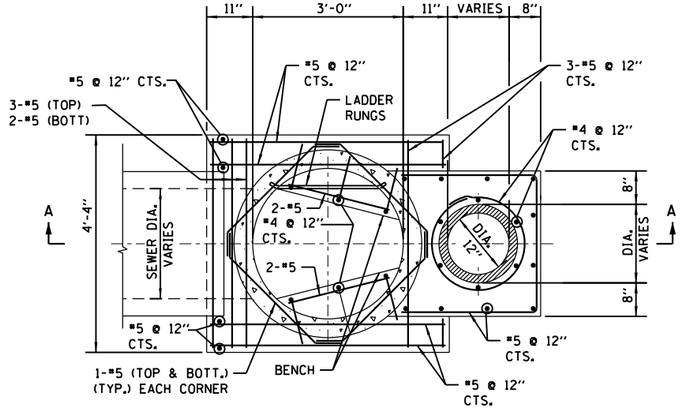


SECTIONAL PLAN-C

| LOCATION | SHEET NO. | ELEVATION | | | | |
|---|---|---|---|---|---|---|
| | | "A" | "B" | "B1" | "C" | "D" |
| | | | | | | |
| | | | | | | |
| | | | | | | |
| | | | | | | |
| | | | | | | |

NOTE: Elevation B1 >= Elevation D

NOTE: FOR DESIGN ONLY- USE 12" DROP PIPE
FOR THE FOLLOWING DEPTHS OF DWF:
6" DWF-42" LATERAL
7" DWF-36" LATERAL
8" DWF-< 24" LATERAL

FOR TRENCH BACKFILL, USE FA-6 SAND, CRUSHED CONCRETE SAND OR STONE SAND.

FOR GRANULAR EMBEDMENT, USE CA-11, CRUSHED GRAVEL, CRUSHED STONE, OR CRUSHED CONCRETE.

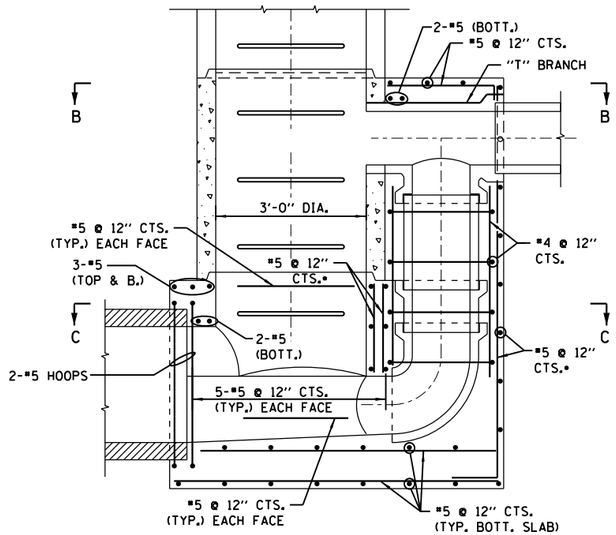


• CUT BAR AT DRAIN PIPE OPENING AS REQUIRED

SECTION A-A

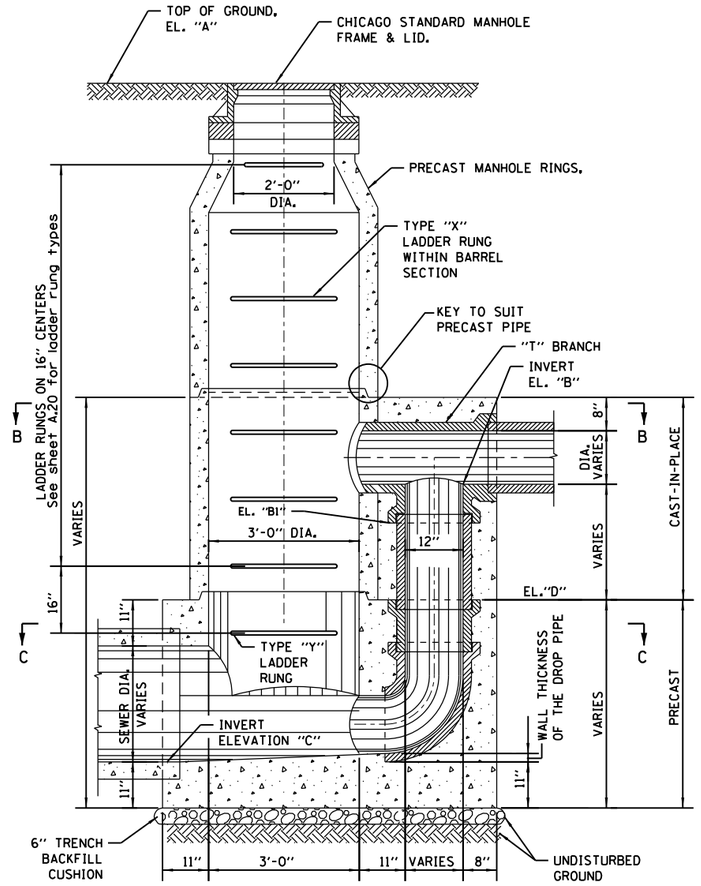


SECTION A-A

| STANDARD REVISIONS | |
|---|---|
| DATE | DESCRIPTION |
| 10/3/16 | APPROVED |
| | |
| | |
| | |
| | |

| PERCENT COMPLETE | DATE |
|---|---|
| 30 | |
| 60 | |
| 75 | |
| 90 | |
| 100 | |
| BULLETIN | |

**CITY OF CHICAGO**
DEPARTMENT OF WATER MANAGEMENT
BUREAU OF ENGINEERING SERVICES

TYPE C
SINGLE DROP MANHOLE

DRAWN: SBW
DESIGNED:
CHECKED:
REVIEWED:

A.13

OF

PN

| | | | | |
|---|---|---|---|---|
| DESIGN: MSA | | | | |
| DRAWN: MSA | | | | |
| CHECKED: TKL | | | | |
| APPROVED: | NO. | BY | DATE | DESCRIPTION |
| DATE: 01/22/2021 | REVISIONS | | | |

CHICAGO DEPARTMENT OF TRANSPORTATION

C★NECT

**DRAINAGE DETAIL**
**DWM STANDARD DRAWING**

**JACKSON PARK MOBILITY IMPROVEMENTS**

STA. TO STA.

| | |
|---|---|
| CONTRACT NO. - | TOTAL SHEETS 1434 |
| PROJECT NO. B-7-203 | SHEET NO. 533 |
| SCALE: | DRAWING NO. DD-18 |

PLOT DATE: 5/17/2021
PLOT SCALE: 40.0000 ' / in.
FILE NAME: pw:\\CIVIL-PW-INT.civiltech.local:CivilTech Projects\Documents\Projects\3153\CADSheets\Detail Sheets\Drainage\sht-dtl-d013.dgn

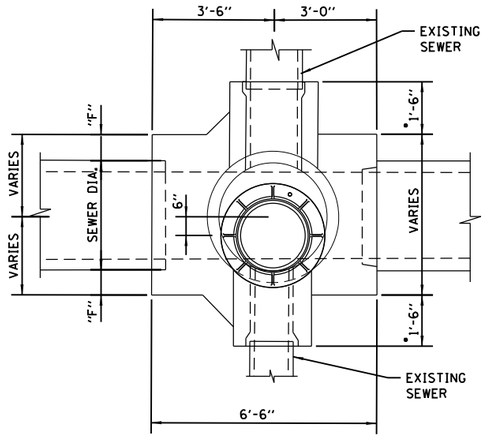


PLAN

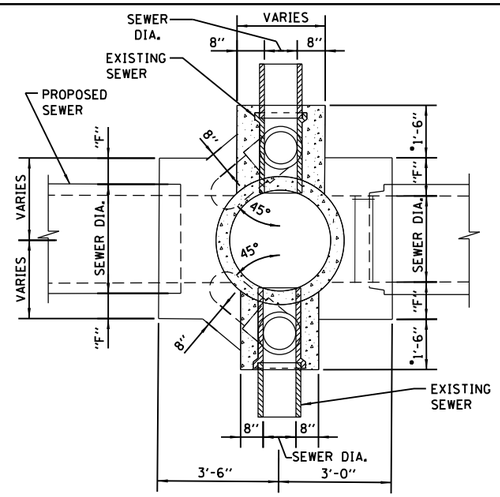


SECTIONAL PLAN

• 1'-8" FOR 24" DIA. SEWERS

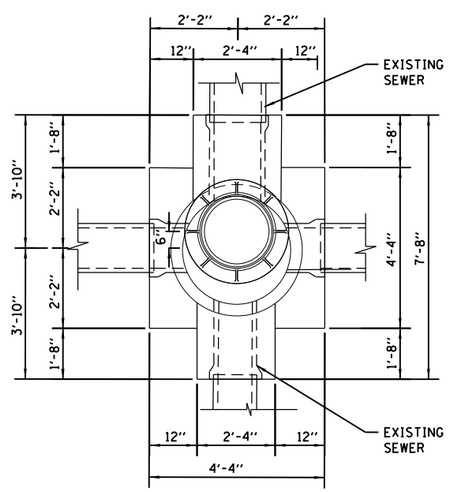


PLAN

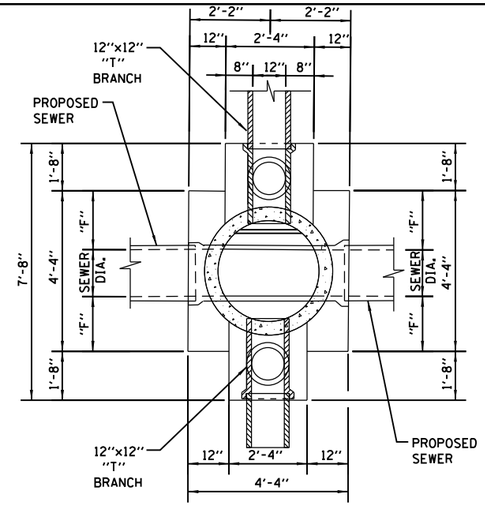


SECTIONAL PLAN

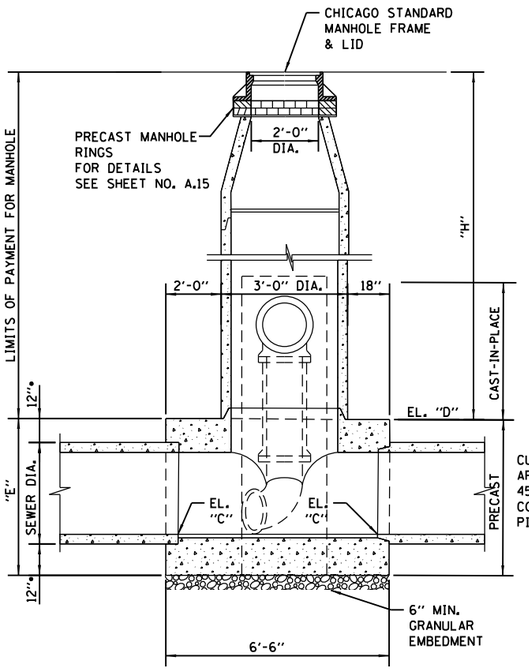


SECTION A-A

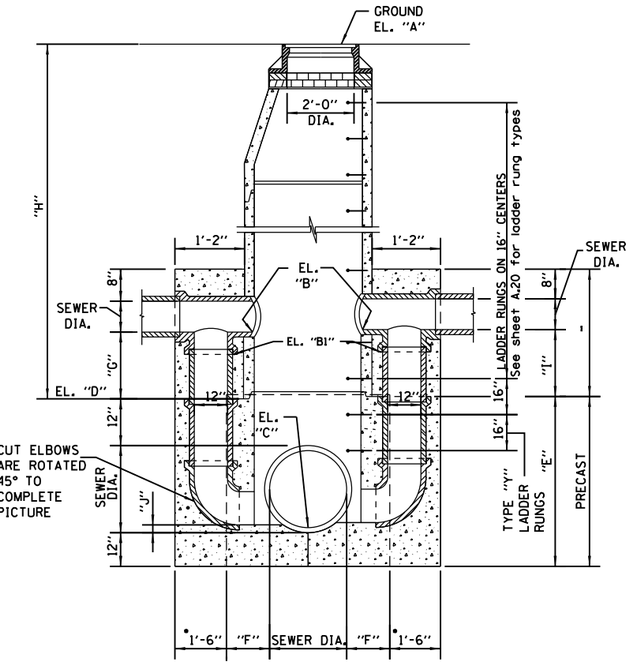


SECTION B-B

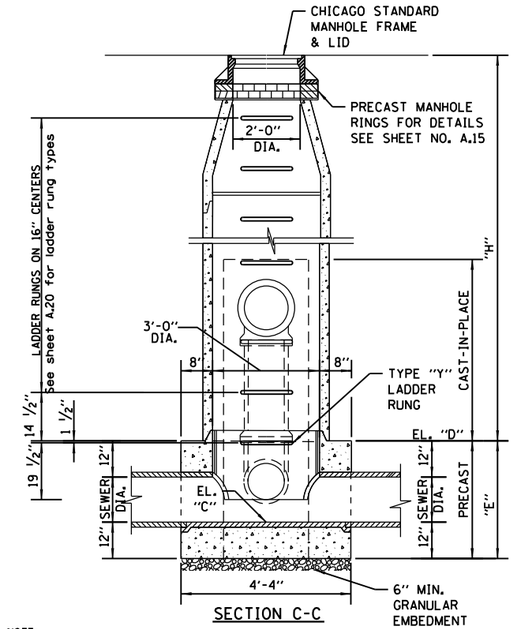


SECTION C-C

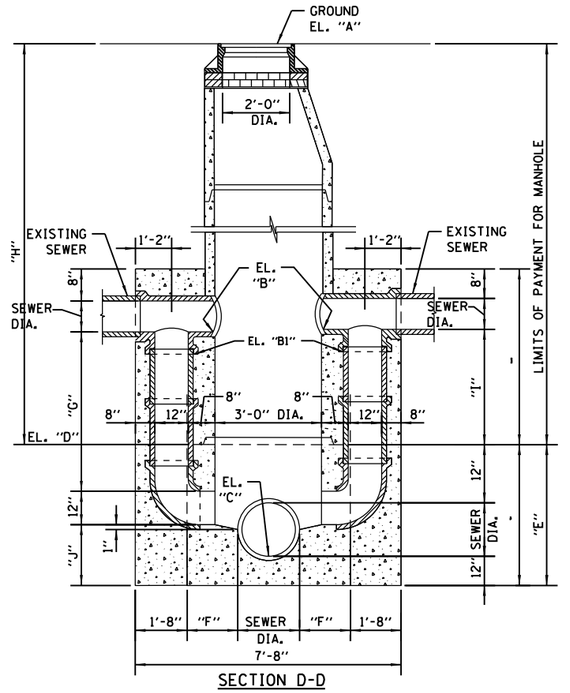


SECTION D-D

NOTE: Elevation B1 >= Elevation D

| LOCATION | SHEET NO. | ITEM NO. | ELEVATION | | | | | DIMENSIONS | | | | | |
|---|---|---|---|---|---|---|---|---|---|---|---|---|---|
| | | | "A" | "B" | "B1" | "C" | "D" | "E" | "F" | "G" | "H" | "I" | "J" |
| | | | | | | | | | | | | | |
| | | | | | | | | | | | | | |
| | | | | | | | | | | | | | |
| | | | | | | | | | | | | | |
| | | | | | | | | | | | | | |

## FOR CONCRETE PIPE SEWERS 24" DIA. TO 48" DIA.

NOTE:
1. UNLESS OTHERWISE NOTED ALL PIPE AND FITTINGS ARE STANDARD STRENGTH VCP.

2. FOR DESIGN ONLY- USE 12" DROP PIPE FOR THE FOLLOWING DEPTHS OF DWF:
6" DWF-42" LATERAL
7" DWF-36" LATERAL
8" DWF-< 24" LATERAL

3. FOR TRENCH BACKFILL, USE FA-6 SAND, CRUSHED CONCRETE SAND OR STONE SAND.

4. FOR GRANULAR EMBEDMENT, USE CA-11, CRUSHED GRAVEL, CRUSHED STONE, OR CRUSHED CONCRETE.

## FOR VITRIFIED CLAY PIPE SEWERS 21" DIA. & SMALLER

| STANDARD REVISIONS | |
|---|---|
| DATE | DESCRIPTION |
| 10/3/16 | APPROVED |
| | |
| | |
| | |
| | |

| PERCENT COMPLETE | DATE |
|---|---|
| 30 | |
| 60 | |
| 75 | |
| 90 | |
| 100 | |
| BULLETIN | |

CITY OF CHICAGO
DEPARTMENT OF WATER MANAGEMENT
BUREAU OF ENGINEERING SERVICES

TYPE C
DOUBLE DROP MANHOLE

DRAWN: SBW
DESIGNED:
CHECKED:
REVIEWED:

A.14

OF

PN

| | | | | |
|---|---|---|---|---|
| DESIGN: MSA | | | | |
| DRAWN: MSA | | | | |
| CHECKED: TKL | | | | |
| APPROVED: | NO. | BY | DATE | DESCRIPTION |
| DATE: 01/22/2021 | REVISIONS | | | |

CDOT CHICAGO DEPARTMENT OF TRANSPORTATION

C²NECT

DRAINAGE DETAIL
DWM STANDARD DRAWING

JACKSON PARK MOBILITY IMPROVEMENTS

STA. TO STA.

| CONTRACT NO. | TOTAL SHEETS | SHEET NO. |
|---|---|---|
| - | 1434 | 534 |
| PROJECT NO. B-7-203 | DRAWING NO. DD-19 | |
| SCALE: | | |

PLOT DATE: 5/17/2021
PLOT SCALE: 40.0000 ' / in.
FILE NAME: pw:\\CIVIL-PW-NT.civiltech.local:CivilTech Projects\Documents\Projects\3153\CAD\Sheets\Detail Sheets\Drainage\sht-dtl-a14.dgn

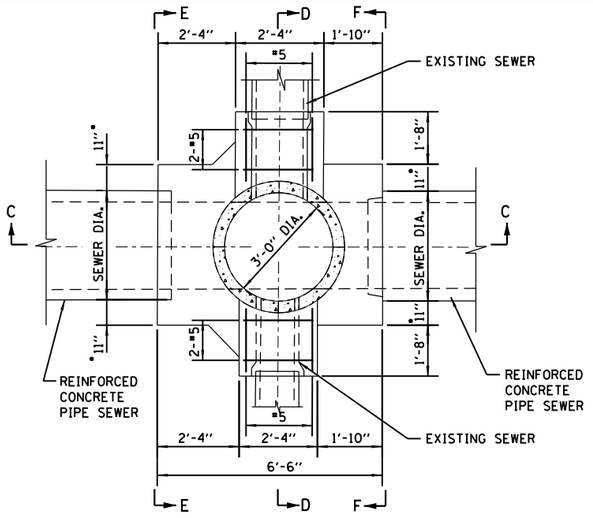


NOTE: • 13" FOR 24" SEWER

PLAN

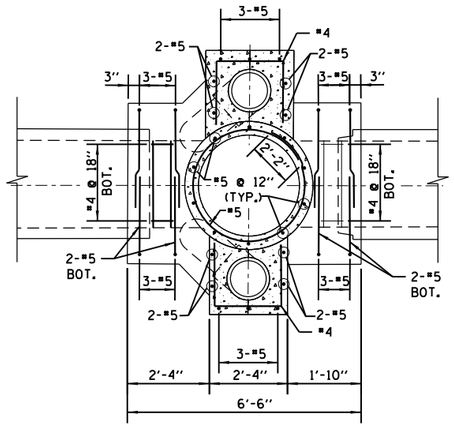


SECTION A-A

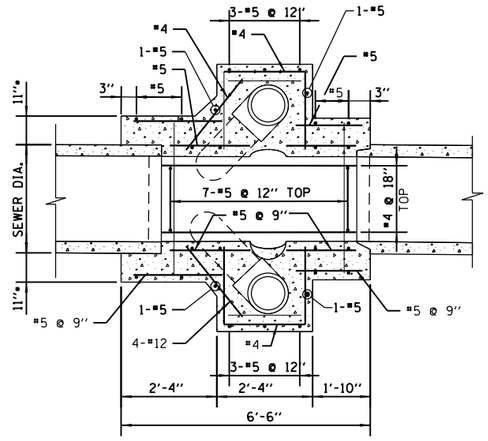


SECTION B-B

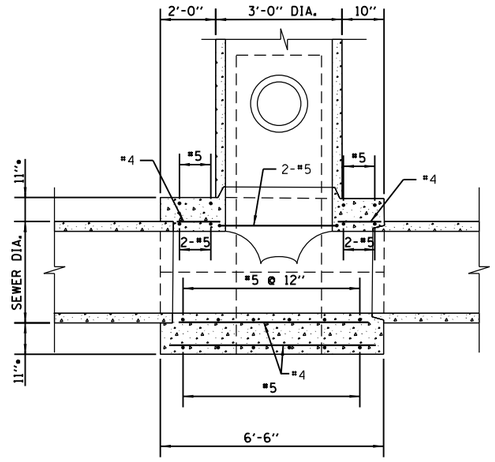


SECTION C-C

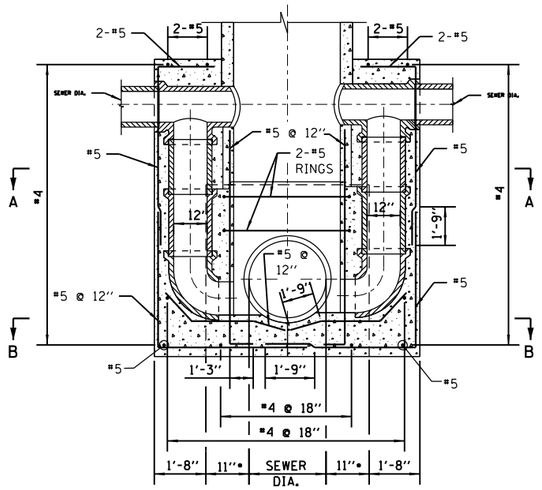


SECTION D-D

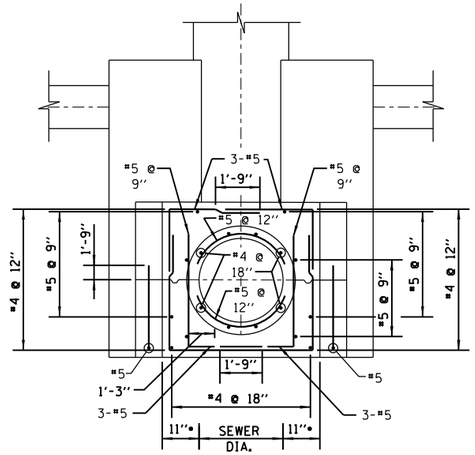


ELEVATION E-E

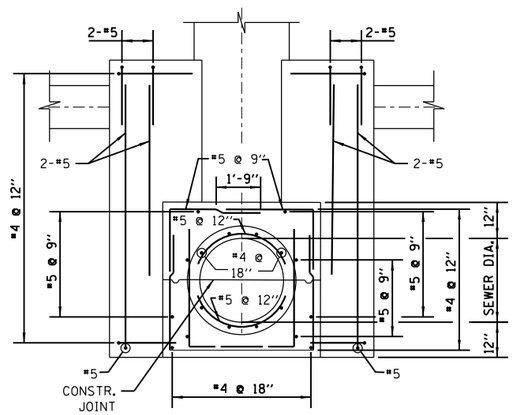


ELEVATION F-F

## FOR CONCRETE PIPE SEWERS
## 24" DIA. TO 48" DIA.

NOTE: FOR DESIGN ONLY- USE 12" DROP PIPE
FOR THE FOLLOWING DEPTHS OF DWF:
6" DWF-42" LATERAL
7" DWF-36" LATERAL
8" DWF-< 24" LATERAL

FOR TRENCH BACKFILL, USE FA-6 SAND, CRUSHED CONCRETE SAND OR STONE SAND.

FOR GRANULAR EMBEDMENT, USE CA-11, CRUSHED GRAVEL, CRUSHED STONE, OR CRUSHED CONCRETE.

| STANDARD REVISIONS | |
|---|---|
| DATE | DESCRIPTION |
| 2/24/15 | APPROVED |

| PERCENT COMPLETE | DATE |
|---|---|
| 30 | |
| 60 | |
| 75 | |
| 90 | |
| 100 | |
| BULLETIN | |

CITY OF CHICAGO
DEPARTMENT OF WATER MANAGEMENT
BUREAU OF ENGINEERING SERVICES

BASES FOR TYPE C DROP MANHOLE

DRAWN: SBW
DESIGNED:
CHECKED:
REVIEWED:

A.15

OF

PN

| | | | | | |
|---|---|---|---|---|---|
| DESIGN: | MSA | | | | |
| DRAWN: | MSA | | | | |
| CHECKED: | TKL | | | | |
| APPROVED: | | NO. | BY | DATE | DESCRIPTION |
| DATE: 01/22/2021 | | REVISIONS | | | |

CDOT CHICAGO DEPARTMENT OF TRANSPORTATION

C*NECT

DRAINAGE DETAIL
DWM STANDARD DRAWING

JACKSON PARK MOBILITY IMPROVEMENTS

STA. TO STA.

CONTRACT NO. -
PROJECT NO. B-7-203
SCALE:

TOTAL SHEETS 1434
SHEET NO. 535
DRAWING NO. DD-20

PLOT DATE: 5/17/2021
PLOT SCALE: 40.0000 ' / in.
FILE NAME: pw:\\CIVIL-PW-INT-civiltech.local\Civiltech Projects\Documents\Projects\3153\CADD\Sheets\Detail Sheets\Drainage\int-det-d-015.dgn

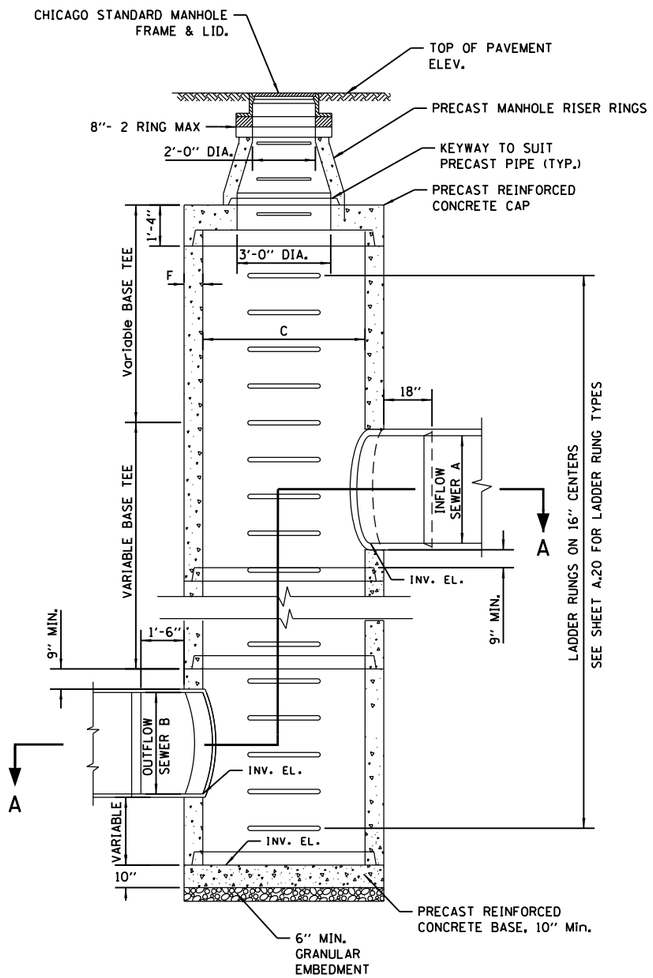


SECTION B-B
SCALE: N.T.S.

| PRECAST COMPONENT TABLE | | | | | | | |
|---|---|---|---|---|---|---|---|
| BASE TEE | | | | WALL THICKNESS | CAP & BASE | | LADDER RUNG LENGTH |
| A | B | C* | D | F | C | E | G |
| 60 | 60 | 84 | 12 | 8 | 84 | 48 | 48.5 |
| 54 | 54 | 84 | 12 | 7 1/2 | 78 | 42 | 46.5 |
| 48 | 48 | 72 | 12 | 7 | 72 | 36 | 44 |
| 42 | 42 | 60 | 9 | 6 | 60 | 24 | 40 |
| 36 | 36 | 60 | 12 | 6 | 60 | 24 | 40 |
| 30 | 30 | 48 | 9 | 5 | 48 | 12 | 35 |
| 24 | 24 | 48 | 12 | 5 | 48 | 12 | 35 |
| NOTE: ALL MEASUREMENTS ARE IN INCHES | | | | | | | |
| *DIAMETERS >84" UP TO 144" ARE AVAILABLE IN 1' INCREMENTS | | | | | | | |

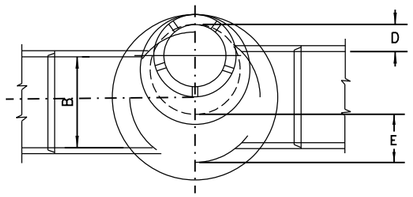


PLAN

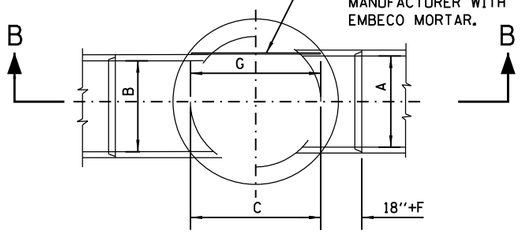


SECTIONAL PLAN A-A

## OPTION: W/O BEND

SCALE: N.T.S.

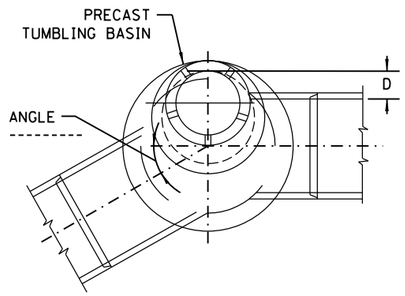


PLAN

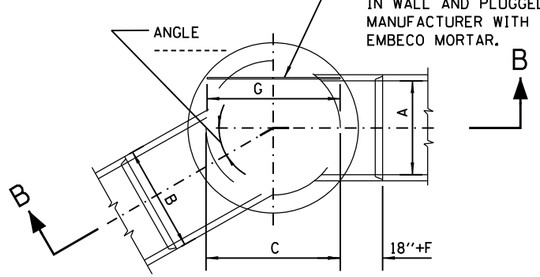


SECTIONAL PLAN A-A

## OPTION: WITH BEND

SCALE: N.T.S.

NOTES:

1. FOR CONTRACTOR'S RESPONSIBILITY REGARDING STRUCTURAL DRAWING, SEE SPECIFICATIONS, BOOK 3.
2. PRECAST PIPE AND FITTINGS MUST CONFORM TO A.S.T.M. DESIGNATION C 76; OR "REINFORCED CONCRETE CULVERT STORM DRAIN AND SEWER PIPE" TABLE IV, WALL B OR C;
3. FOR ADDITIONAL INFORMATION, SEE SPECIFICATIONS, BOOK 3.

| STANDARD REVISIONS | |
|---|---|
| DATE | DESCRIPTION |
| 2/25/15 | Approved Plan |
| | |
| | |
| | |
| | |

| PERCENT COMPLETE | DATE |
|---|---|
| 30 | |
| 60 | |
| 75 | |
| 90 | |
| 100 | |
| BULLETIN | |

CITY OF CHICAGO
DEPARTMENT OF WATER MANAGEMENT
BUREAU OF ENGINEERING SERVICES

PRECAST TUMBLING BASIN DETAILS

DRAWN: SBW
DESIGNED:
CHECKED:
REVIEWED:

A.16

OF

PN

| | | | | | |
|---|---|---|---|---|---|
| DESIGN: | MSA | | | | |
| DRAWN: | MSA | | | | |
| CHECKED: | TKL | | | | |
| APPROVED: | | NO. | BY | DATE | DESCRIPTION |
| DATE: 01/22/2021 | | REVISIONS | | | |

CDOT CHICAGO DEPARTMENT OF TRANSPORTATION

C*NECT

DRAINAGE DETAIL
DWM STANDARD DRAWING

JACKSON PARK MOBILITY IMPROVEMENTS

STA. TO STA.

| | |
|---|---|
| CONTRACT NO. | - |
| PROJECT NO. | B-7-203 |
| SCALE: | |
| TOTAL SHEETS | 1434 |
| SHEET NO. | 536 |
| DRAWING NO. | DD-21 |

PLOT DATE: 5/17/2021
PLOT SCALE: 40.0000 ' / in.
FILE NAME: pw:\\CWI-PW-INT.civiltech.local\Civiltech Projects\Documents\Projects\3153\CADD\Sheets\Detail Sheets\Drainage\cnt-cit-d-016.dgn

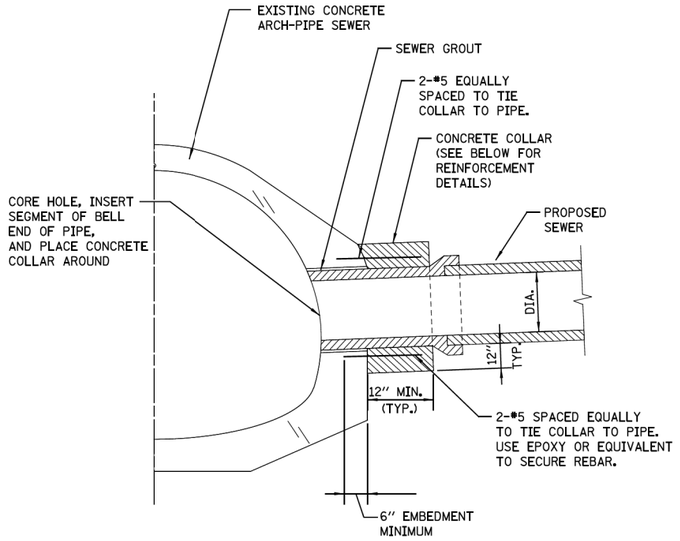


## EXAMPLE TYPICAL CONNECTION DETAIL

(NOT TO SCALE)

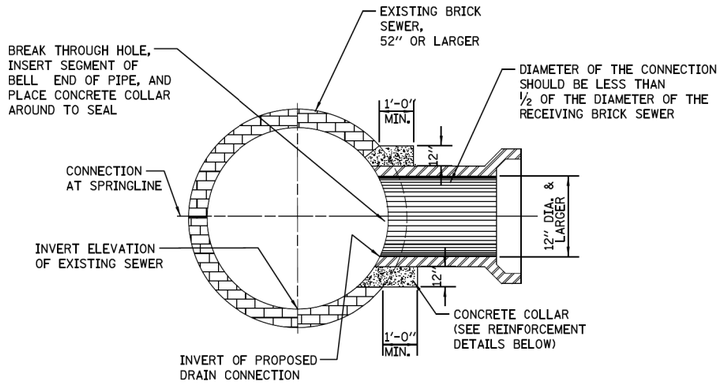


## EXAMPLE TYPICAL BRICK SEWER CONNECTION FOR CONNECTING PIPE SIZES GREATER THAN 12" DIA.

(NOT TO SCALE)

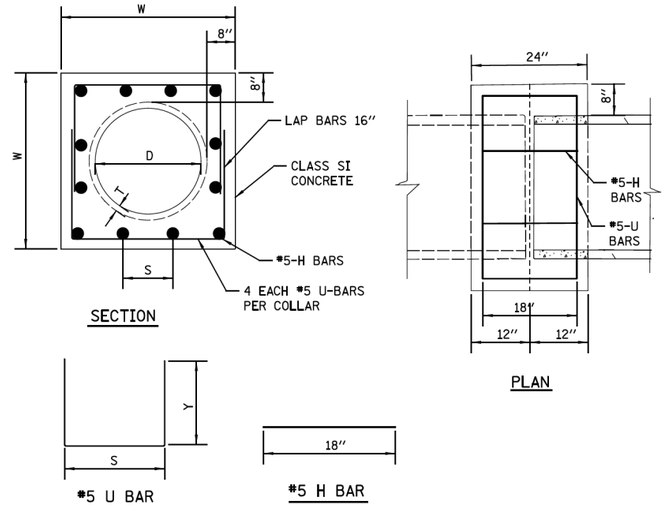


## PIPE TO PIPE REINFORCED CONCRETE COLLAR DETAIL

SCALE: N.T.S.

CONRETE COLLAR NOTES:

1. ALL ITEMS AND MATERIALS SHALL CONFORM TO THE LATEST IDOT SSRBC SPECIFICATIONS, UNLESS OTHERWISE NOTED IN SUPPLEMENTAL SPECIFICATIONS FOR THE SPECIFIC PROJECT BEING CONSTRUCTED.
2. ALL CONCRETE SHALL CONFORM TO IDOT SSRBC ARTICLE 1020.04, CLASS SI, WITH A COMPRESSIVE STRENGTH OF 3500 PSI.
3. ALL EPOXY COATED REINFORCEMENT BARS SHALL CONFORM TO IDOT SSRBC SECTION 508, AND ARTICLE 1006.10.
4. UNLESS OTHERWISE SHOWN, THE COVER FOR REINFORCING STEEL SHALL BE AS FOLLOWS: A.) CONCRETE CAST AGAINST PERMANENTLY EXPOSE EARTH: 3" B.) ALL OTHER REINFORCING BARS: 2"
5. CONCRETE COLLARS SHALL BE USED AT ALL EXISTING/PROPOSED PIPE CONNECTIONS. TRIM EXISTING PIPE END TO PROVIDE FLUSH BUTT JOINT, INSTALL REBAR, AND PLACE CONCRETE COLLAR.
6. THE CONTRACTOR SHALL PROVIDE ALL MEASURES AND PRECAUTIONS NECESSARY TO PREVENT DAMAGE TO THE EXISTING SEWER DURING CONSTRUCTION. CONTRACTOR SHALL ADEQUATELY BRACE OR SHORE EXISTING SEWER IF REQUIRED TO MAINTAIN INTEGRITY OF SEWER DURING CONSTRUCTION. SUBMIT DESIGN AND DETAILS, SEALED AND SIGNED BY AN ILLINOIS LICENSED STRUCTURAL ENGINEER, SHOWING TEMPORARY BRACING FOR THE EXISTING SEWER DURING CONSTRUCTION FOR REVIEW PRIOR TO CONSTRUCTION. ANY DAMAGE TO EXISTING STRUCTURE IS RESPONSIBILITY OF THE CONTRACTOR.
7. CONTRACTOR SHALL DIVERT ALL FLOW FROM THE EXISTING SEWER PRIOR TO CONSTRUCTION SO THAT THE WORK CAN BE PERFORMED IN THE DRY CONDITION. SEWER MUST BE MAINTAINED IN SERVICE AT ALL TIMES. SUBMIT MEANS OF FLOW DIVERSION FOR REVIEW PRIOR BREAKING INTO EXISTING BRICK SEWER. ALL EXCAVATION SHALL BE KEPT DEWATERED DURING CONSTRUCTION OPERATIONS UNTIL BACKFILL IN PLACE. PROVISIONS SHALL BE MADE TO PREVENT THE BOTTOM OF ALL EXCAVATIONS FROM FREEZING OR FLOODING AT ALL TIMES. PLAN DIMENSIONS AND DETAILS RELATIVE TO EXISTING STRUCTURE SHALL BE SUBJECT TO NOMINAL CONSTRUCTION VARIATIONS. IT SHALL BE CONTRACTOR'S RESPONSIBILITY TO VERIFY SUCH DIMENSIONS AND DETAILS IN THE FIELD AND MAKE NECESSARY APPROVED ADJUSTMENTS PRIOR TO CONSTRUCTION OR ORDERING MATERIALS. SUCH VARIATIONS SHALL NOT BE CAUSE FOR ADDITIONAL COMPENSATION FOR A CHANGE IN THE SCOPE OF THE WORK, HOWEVER, CONTRACTOR WILL BE PAID FOR THE QUANTITY ACTUALLY FURNISHED AT THE UNIT PRICE OF THE WORK.

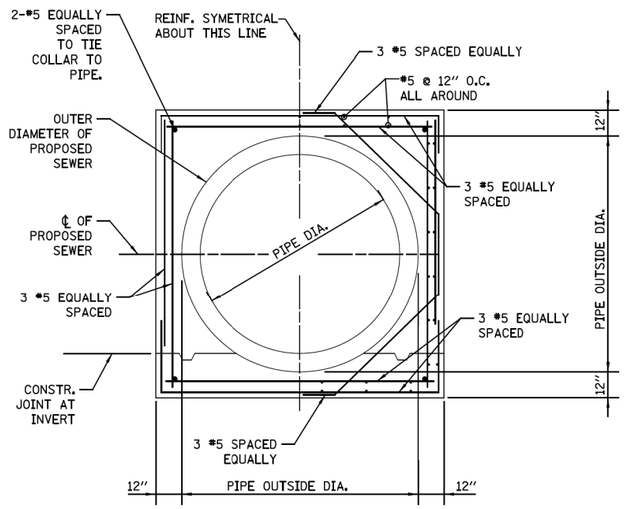


## EXAMPLE CONCRETE COLLAR REINFORCEMENT - SECTION

(NOT TO SCALE)

| | | U BAR | | | | H BAR | | | | | |
|---|---|---|---|---|---|---|---|---|---|---|---|
| D | T | W | | | TOTAL | | | TOTAL | CLASS SI | |
| RCP DIA. | PIPE THICKNESS | WIDTH | X | Y | QTY | LENGTH | S | QTY | LENGTH | CONCRETE | #5 EPOXY REBAR |
| (IN) | (IN) | (IN) | (IN) | (IN) | (EACH) | (FT) | (IN) | (EACH) | (FT) | (CU YD) | (LBS) |
| 12* | 2.00 | 32.0 | 26.00 | 21.00 | 4 | 22.7 | 8 1/8 | 12.0 | 18.0 | 0.42 | 42.5 |
| 15* | 2.25 | 35.5 | 29.50 | 22.75 | 4 | 25.0 | 9 3/8 | 12.0 | 18.0 | 0.49 | 44.8 |
| 18* | 2.50 | 39.0 | 33.00 | 24.50 | 4 | 27.3 | 10 1/2 | 12.0 | 18.0 | 0.57 | 47.2 |
| 21* | 2.75 | 42.5 | 36.50 | 26.25 | 4 | 29.7 | 8 3/4 | 16.0 | 24.0 | 0.65 | 56.0 |
| 24 | 3.00 | 46.0 | 40.00 | 28.00 | 4 | 32.0 | 9 5/8 | 16.0 | 24.0 | 0.72 | 58.4 |
| 27 | 3.25 | 49.5 | 43.50 | 29.75 | 4 | 34.3 | 10 1/2 | 16.0 | 24.0 | 0.81 | 60.8 |
| 30 | 3.50 | 53.0 | 47.00 | 31.50 | 4 | 36.7 | 11 3/8 | 16.0 | 24.0 | 0.89 | 63.3 |
| 33 | 3.75 | 56.5 | 50.50 | 33.25 | 4 | 39.0 | 9 4/5 | 20.0 | 30.0 | 0.98 | 72.0 |
| 36 | 4.00 | 60.0 | 54.00 | 35.00 | 4 | 41.3 | 10 1/2 | 20.0 | 30.0 | 1.07 | 74.4 |
| 42 | 4.50 | 67.0 | 61.00 | 38.50 | 4 | 46.0 | 9 7/8 | 24.0 | 36.0 | 1.26 | 85.5 |
| 48 | 5.00 | 74.0 | 68.00 | 42.00 | 4 | 50.7 | 11 1/8 | 24.0 | 36.0 | 1.46 | 90.4 |

*NOTE: OPTION TO USE WITHOUT REBAR

| STANDARD REVISIONS | |
|---|---|
| DATE | DESCRIPTION |
| 1/22/14 | APPROVED PLAN |
| | |
| | |
| | |
| | |

| PERCENT COMPLETE | DATE |
|---|---|
| 30 | |
| 60 | |
| 75 | |
| 90 | |
| 100 | |
| BULLETIN | |

**CITY OF CHICAGO**
DEPARTMENT OF WATER MANAGEMENT
BUREAU OF ENGINEERING SERVICES

CONCRETE COLLAR / CONNECTION DETAILS

DRAWN: SRM
DESIGNED:
CHECKED:
REVIEWED:

A.17

___ OF ___

PN _____

$FILE$
$DATE$

CDWM_Details.cel 8/5/2015 11:04:19 AM

PLOT DATE: 5/17/2021
PLOT SCALE: 40.0000 ' / in.
FILE NAME: pw:\\CIVIL-PW-INT.cdot.tech.local:CivilTech Projects\Documents\Projects\3133\CADDSheets\Detail Sheets\Drainage\dsht-dtl-d017.dgn

| | | | | | |
|---|---|---|---|---|---|
| DESIGN: MSA | | | | | |
| DRAWN: MSA | | | | | |
| CHECKED: TKL | | | | | |
| APPROVED: | NO. | BY | DATE | DESCRIPTION | |
| DATE: 01/22/2021 | REVISIONS | | | | |

CDOT CHICAGO DEPARTMENT OF TRANSPORTATION

C²NECT

DRAINAGE DETAIL
DWM STANDARD DRAWING

JACKSON PARK MOBILITY IMPROVEMENTS

STA. TO STA.

| | |
|---|---|
| CONTRACT NO. | - |
| PROJECT NO. | B-7-203 |
| SCALE: | |

| TOTAL SHEETS | SHEET NO. |
|---|---|
| 1434 | 537 |

DRAWING NO. DD-22

# STANDARD DRAINAGE STRUCTURES FOR PUBLIC STREETS

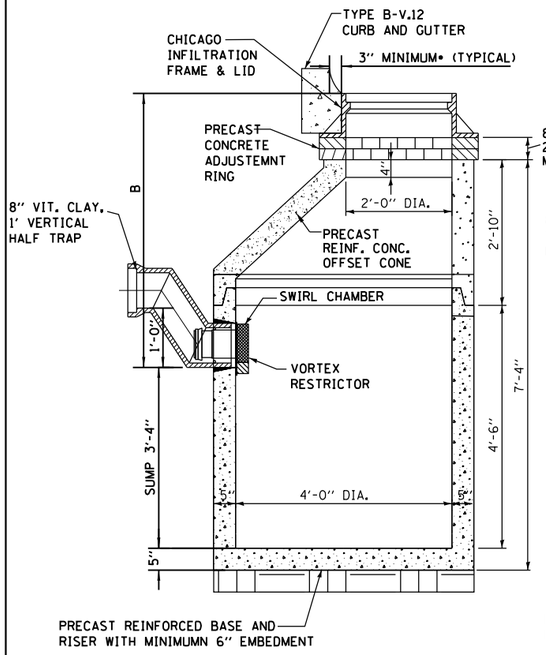


## STANDARD CATCH BASIN-4' DIA.

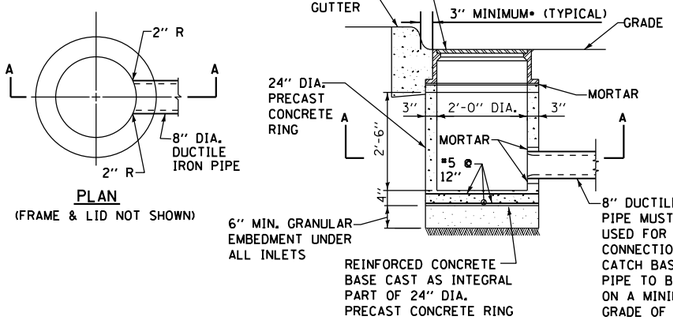


## STANDARD INLET-2' DIA.

NOTE:
INLETS AND 3' DIAMETER CATCH BASINS ARE TO BE USED ONLY WITH PRIOR APPROVAL OF DWM SEWER ENGINEER OR FIELD INSPECTOR.

FOR TRENCH BACKFILL, USE FA-6 SAND, CRUSHED CONCRETE SAND, OR STONE SAND.

FOR GRANULAR EMBEDMENT, USE CA-11, CRUSHED GRAVEL, CRUSHED STONE, OR CRUSHED CONCRETE.

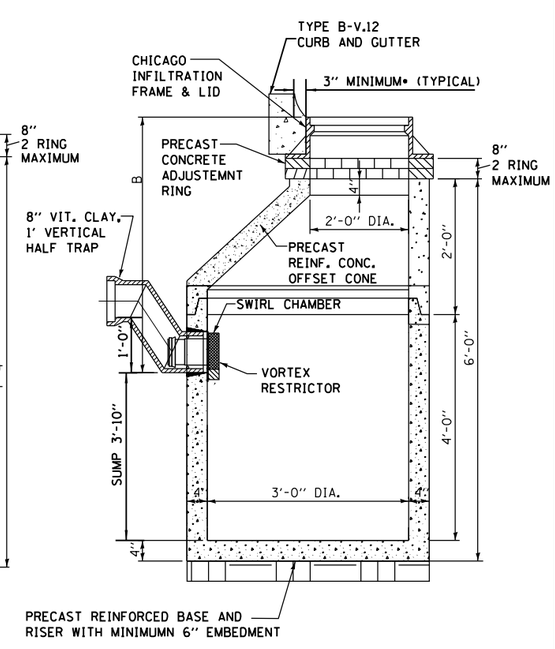


## STANDARD CATCH BASIN-3' DIA.

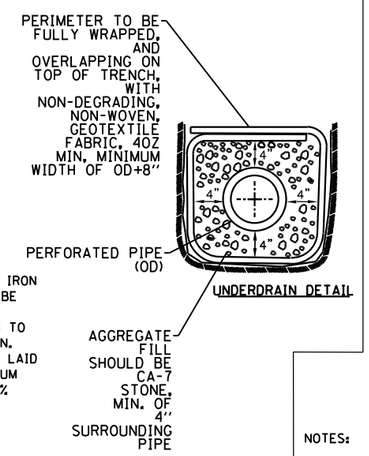


•OUTER EDGE OF FRAME TO FACE OF CURB

# STANDARD DRAINAGE STRUCTURES FOR PUBLIC ALLEYS

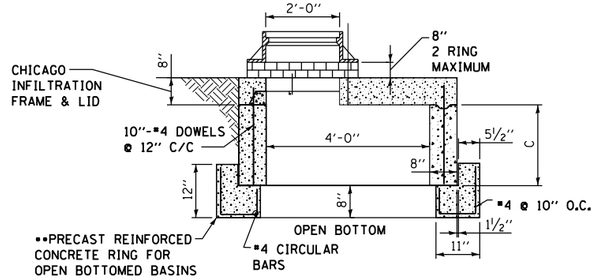


## GREEN ALLEY OPEN BOTTOM CATCH BASIN

TO BE USED IF STANDARD CONE WITH REQUIRED SUMP DEPTH INSTALLATION IS IMPOSSIBLE.

••IF FLAT TOP SLAB CATCH BASIN IS USED IN AN OPEN BOTTOM APPLICATION, THE FOLLOWING CRITERIA MUST BE FOLLOWED:

-"C" MUST BE A MINIMUM OF 3 FEET.

- PROVIDE A MINIMUM AGGREGATE BASE OF 1.0 FEET BELOW PRECAST REINFORCED CONCRETE RING.

-GEOTECH FABRIC MUST BE PLACED ON SIDES AND BOTTOM OF AGGREGATE SURROUNDING BASIN.

-AGGREGATE BASE MUST PROVIDE ADEQUATE STORMWATER STORAGE CAPACITY PER THE APPROVED/PERMITTED PLANS.

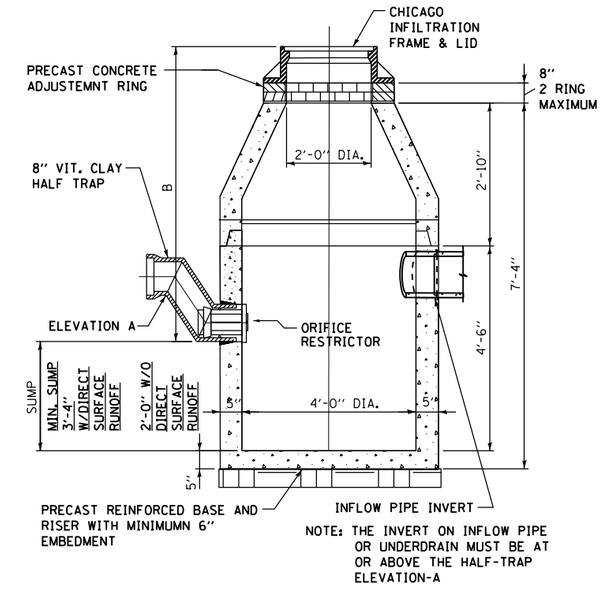


## CATCH BASIN-ORIFICE RESTRICTOR

N.T.S.

NOTES:

1. FOR ANY DRAIN TILE CONNECTION, THE WATER TABLE MUST BE AT LEAST 3.5 FEET BELOW ELEVATION A.

2. PVC UNDERDRAINS MUST BE 4" MINIUMUM DIAMETER, (6" RECOMMENDED) AND MUST BE WRAPPED IN GEOTECH FABRIC.

# DRAINAGE STRUCTURES RESTRICTORS

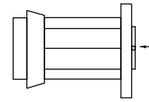

ORIFICE RESTRICTOR

INSERT THE RESTRICTOR INTO THE HALF-TRAP. UPON TIGHTENING OF THE CENTER NUT ON THE FACE OF THE RESTRICTOR, THE RUBBER O-RINGS WILL EXPAND INSIDE THE HALF TRAP, PROVIDING A WATER- TIGHT SEAL. PULL ON RESTRICTOR TO VERIFY THAT A TIGHT FIT IS MADE.

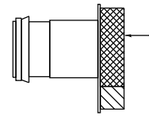

VORTEX RESTRICTOR

PULL ON RESTRICTOR TO VERIFY THAT A TIGHT FIT IS MADE.

INSERT THE RESTRICTOR WITH THE OPENING DOWN. UPON TIGHTENING OF THE 2 BOLTS ON THE FACE OF THE RESTRICTOR, THE RUBBER O-RINGS WILL PROVIDE A WATER- TIGHT SEAL.

GENERAL NOTES:

1. CATCH BASIN TO CATCH BASIN CONNECTIONS ARE ALLOWED IN PRIVATE SITES & ALLEYS. ONLY THE DOWNSTREAM CATCH BASIN IS REQUIRED TO HAVE A HALF-TRAP.

2. IF B < 4 FEET, THEN USE A DUCTILE IRON PIPE HALF TRAP AND FLAT TOP SLAB CATCH BASIN AS NECESSARY.

3. INLETS AND 3' DIAMETER CATCH BASINS ARE TO BE USED ONLY
WITH PRIOR APPROVAL OF DWM FIELD INSPECTOR.

RESTRICTOR NOTES:

THE DWM'S RAIN BLOCKER RESTRICTOR PROGRAM MUST BE MAINTAINED WITH ANY ROADWAY IMPROVEMENT.

THE DESIGN OF ANY ROADWAY IMPROVEMENT MUST CONSIDER LIMITING THE NUMBER OF CATCH BASINS TO THE EXTENT PRACTICAL. THE NUMBER OF EXISTING STRUCTURES SHOULD NOT BE INCREASED.

THE RESTRICTORS CAN BE OBTAINED FROM DWM CENTRAL DISTRICT AT 3901 S. ASHLAND AVE. THE CONTRACTOR SHOULD ARRANGE FOR PICK UP BY CONTACTING 312-747-1177 (7AM TO 3PM, M-F)

FLOW RESTRICTORS MUST BE INSTALLED IN ALL CATCH BASINS OUTSIDE OF THE CENTRAL BUSINESS DISTRICT. RESTRICTORS MUST NOT BE INSTALLED IN CATCH BASINS IN CLOSE PROXIMITY TO VIADUCT AREAS, BUS STOPS, OR EMERGENCY ENTRANCES. THE DWM MUST APPROVE THE NON-INSTALLATION OR REMOVAL OF ANY RESTRICTOR. REQUIREMENTS FOR RESTRICTOR INSTALLATION ARE AS FOLLOWS:

- •ARTERIAL STREETS: 3-INCH ORIFICE RESTRICTOR
- •BUS ROUTES: 3-INCH ORIFICE RESTRICTOR
- •RESIDENTIAL STREETS: 3-INCH VORTEX RESTRICTOR
- •ALLEYS: 3-INCH ORIFICE RESTRICTOR IN THE LAST CB.
- •CLOSED LIDS ARE REQUIRED ON ALL MANHOLES EXCEPT AT INTERSECTIONS WHERE A PERFORATED LID SHALL BE USED.

| STANDARD REVISIONS | |
|---|---|
| DATE | DESCRIPTION |
| 9/30/16 | APPROVED |
| | |
| | |
| | |
| | |

| PERCENT COMPLETE | DATE |
|---|---|
| 30 | |
| 60 | |
| 75 | |
| 90 | |
| 100 | |
| BULLETIN | |

**CITY OF CHICAGO**
DEPARTMENT OF WATER MANAGEMENT
BUREAU OF ENGINEERING SERVICES

DRAINAGE STRUCTURE DETAILS

DRAWN: SBW
DESIGNED:
CHECKED:
REVIEWED:

A.18

OF

PN

| | | | | |
|---|---|---|---|---|
| DESIGN: MSA | | | | |
| DRAWN: MSA | | | | |
| CHECKED: TKL | | | | |
| APPROVED: | NO. | BY | DATE | DESCRIPTION |
| DATE: 01/22/2021 | REVISIONS | | | |

CDOT CHICAGO DEPARTMENT OF TRANSPORTATION

C*NECT

DRAINAGE DETAIL
DWM STANDARD DRAWING

JACKSON PARK MOBILITY IMPROVEMENTS

STA. TO STA.

| CONTRACT NO. | TOTAL SHEETS | SHEET NO. |
|---|---|---|
| - | 1434 | 538 |
| PROJECT NO. B-7-203 | DRAWING NO. DD-23 | |
| SCALE: | | |

PLOT DATE: 5/17/2021
PLOT SCALE: 40.0000 ' / in.
FILE NAME: pw:\\CIVIL-PW-NT.dwltech.local:CivilTech Projects\Documents\Projects\3153\CAD\Sheets\Detail Sheets\DraiNages\sh-cit-d18.dgn

# STANDARD DRAINAGE STRUCTURES FOR PRIVATE DEVELOPMENT

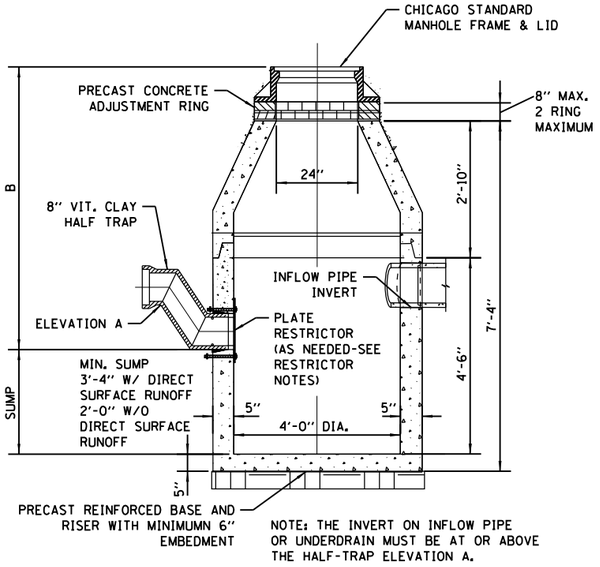


PLATE RESTRICTOR CATCH BASIN
CONICAL SECTION
N.T.S.

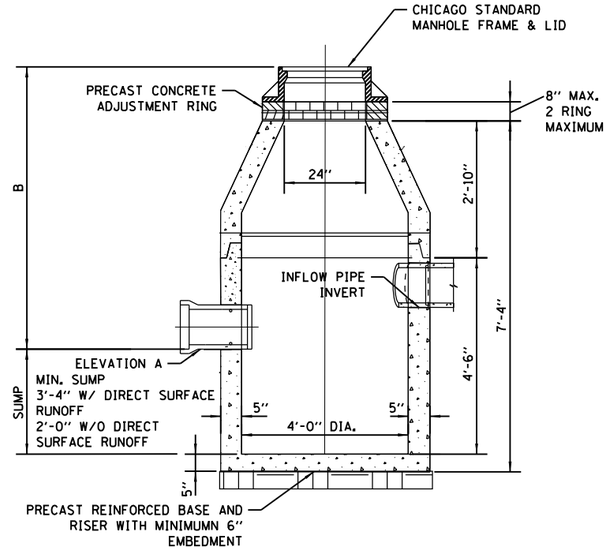


STANDARD CATCH BASIN
CONICAL SECTION
N.T.S.

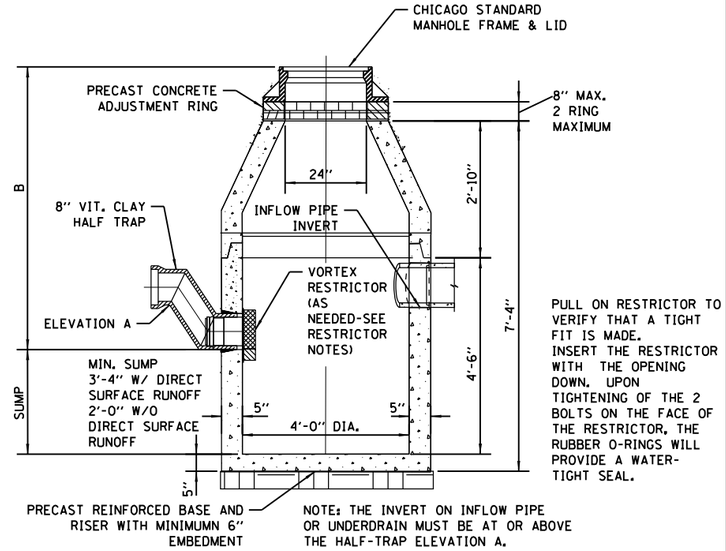


PULL ON RESTRICTOR TO VERIFY THAT A TIGHT FIT IS MADE. INSERT THE RESTRICTOR WITH THE OPENING DOWN. UPON TIGHTENING OF THE 2 BOLTS ON THE FACE OF THE RESTRICTOR, THE RUBBER O-RINGS WILL PROVIDE A WATER-TIGHT SEAL.

VORTEX RESTRICTOR CATCH BASIN
CONICAL SECTION
N.T.S.

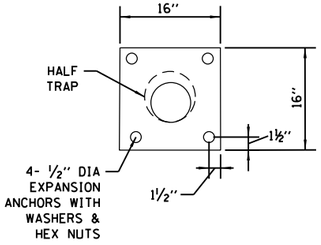


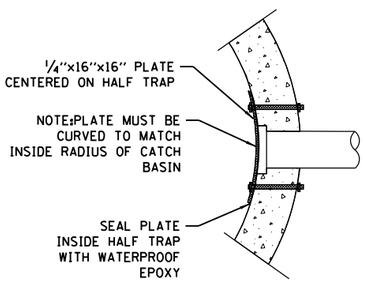


NOTES:

1. THE RESTRICTOR MUST BE INSTALLED IN CATCH BASINS OR MANHOLES WITH 2' MIN. SUMPS.

2. PLATE AND FASTENERS MUST BE FABRICATED IN STAINLESS STEEL, DUCTILE IRON, OR EQUIVALENT WATERPROOF/WEATHER PROOF MATERIALS.

3. MIN. ORIFICE SIZE= 2.5" DIA.

4. IF B< 4 FEET, THEN USE A FLAT TOP SLAB CATCH BASIN AS NECESSARY.

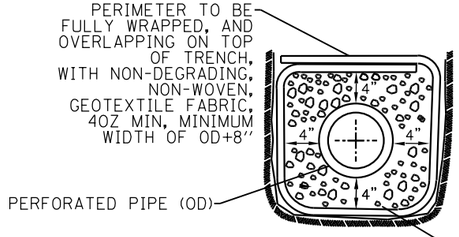


UNDERDRAIN DETAIL

GENERAL NOTES:

1. CATCH BASIN TO CATCH BASIN CONNECTIONS ARE ALLOWED IN PRIVATE SITES & ALLEYS. ONLY THE DOWNSTREAM CATCH BASIN IS REQUIRED TO HAVE A HALF-TRAP.

2. IF B < 4 FEET, THEN USE A FLAT TOP SLAB CATCH BASIN AS NECESSARY.

3. FOR TRENCH BACKFILL, USE FA-6 SAND, CRUSHED CONCRETE SAND, OR STONE SAND.

4. FOR GRANULAR EMBEDMENT, USE CA-11, CRUSHED GRAVEL, CRUSHED STONE, OR CRUSHED CONCRETE.

5. INLETS AND 3' DIAMETER CATCH BASINS ARE TO BE USED ONLY WITH PRIOR APPROVAL OF THE DEPT OF WATER MANAGEMENT- ENGINEERING SERVICES, SEWER SECTION, AND THE DEPT. OF BUILDINGS STORMWATER REVIEWER.

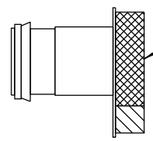


PULL ON RESTRICTOR TO VERIFY THAT A TIGHT FIT IS MADE.

INSERT THE RESTRICTOR WITH THE OPENING DOWN. UPON TIGHTENING OF THE 2 BOLTS ON THE FACE OF THE RESTRICTOR, THE RUBBER O-RINGS WILL PROVIDE A WATER- TIGHT SEAL.

NOTES:

1. IF B < 4 FEET, THEN USE A FLAT TOP SLAB CATCH BASIN AS NECESSARY.

2. THE RESTRICTORS CAN BE OBTAINED FROM DWM CENTRAL DISTRICT AT 3901 S. ASHLAND AVE. THE CONTRACTOR SHOULD ARRANGE FOR PICK UP BY CONTACTING 312-747-1177 (7AM TO 3PM, M-F)

| STANDARD REVISIONS | |
|---|---|
| DATE | DESCRIPTION |
| 9/30/16 | APPROVED PLAN |
| | |
| | |
| | |
| | |

| PERCENT COMPLETE | DATE |
|---|---|
| 30 | |
| 60 | |
| 75 | |
| 90 | |
| 100 | |
| BULLETIN | |

**CITY OF CHICAGO**
DEPARTMENT OF WATER MANAGEMENT
BUREAU OF ENGINEERING SERVICES

DRAINAGE STRUCTURE DETAILS
PRIVATE DEVELOPMENT

DRAWN: SB#
DESIGNED:
CHECKED:
REVIEWED:

A.19

OF

PN

| | | | | | |
|---|---|---|---|---|---|
| DESIGN: | MSA | | | | |
| DRAWN: | MSA | | | | |
| CHECKED: | TKL | | | | |
| APPROVED: | | NO. | BY | DATE | DESCRIPTION |
| DATE: 01/22/2021 | | REVISIONS | | | |

CDOT CHICAGO DEPARTMENT OF TRANSPORTATION

C*NECT

**DRAINAGE DETAIL**
**DWM STANDARD DRAWING**

**JACKSON PARK MOBILITY IMPROVEMENTS**

STA. TO STA.

| CONTRACT NO. | TOTAL SHEETS | SHEET NO. |
|---|---|---|
| - | 1434 | 539 |
| PROJECT NO. B-7-203 | DRAWING NO. | |
| SCALE: | DD-24 | |

PLOT DATE: 5/17/2021
PLOT SCALE: 40.0000 ' / in.
FILE NAME: pw:\CIVIL-PW:NT:cdottech:local\CivilTech Projects\Documents\Projects\3133\CAD\Sheets\Detail Sheets\Drainage\std-dtl-019.dgn

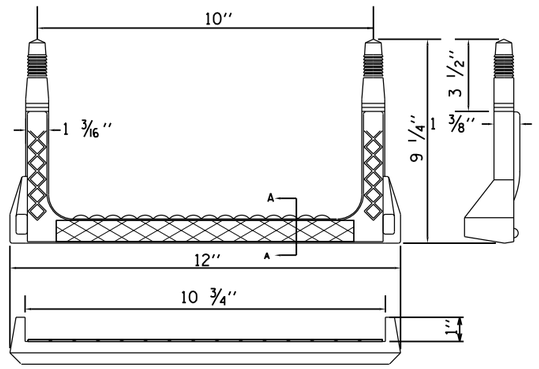


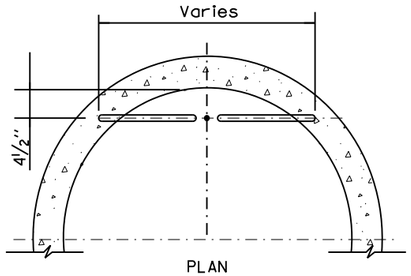


PLAN

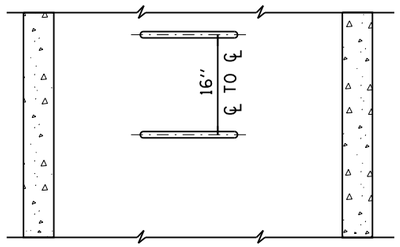


ELEVATION

TYPE X

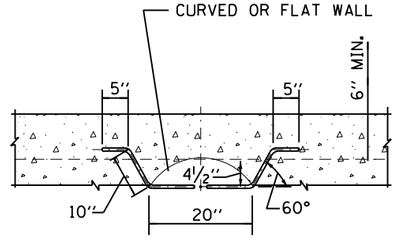


PLAN

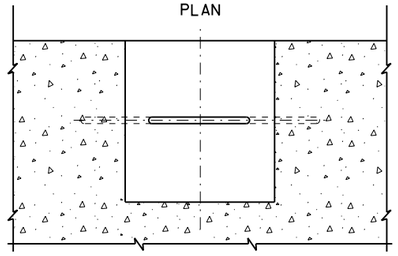

ELEVATION

TYPE Y

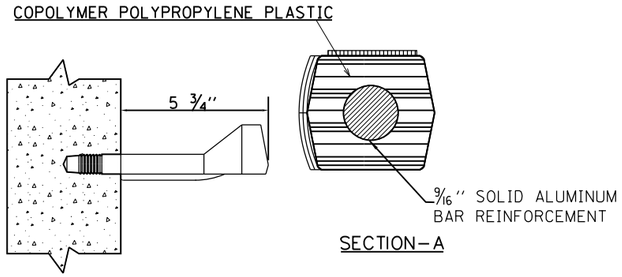


SECTION–A

RECTANGULAR STEP LADDER RUNG

FOR USE ONLY IN 48'' DIAMETER
AND LARGER MANHOLES.

NOTES:

1. VERTICAL SPACING = 16'' O.C., ON VERTICAL WALL ONLY.

2. FIRST LADDER RING SHOULD BE A MAXIMUM OF 31'' BELOW TOP OF MANHOLE FRAME

3. STEPS SHALL MEET THE REQUIREMENTS OF ASTM C478 IN ADDITION TO A HORIZONTAL PULL-OUT LOAD OF 1000 LBS. WHEN INSTALLED.

4. ALL STEPS SHALL BE VERTICALLY ALIGNED IN A STRAIGHT LINE.

5. NO STEPS LOCATED INSIDE MANHOLE CHIMNEY.

6. MINIMUM CONCRETE STRENGTH MUST BE 3000 PSI

7. HOLES- PREFORMED/DRILLED
   A. HOLES MUST BE PARALLEL
   B. HOLES MUST BE 10'' CENTERED, 1'' DIAMETER
   C. MINIMUM DEPTH- 3 1/2'' TO 3 3/4''

| STANDARD REVISIONS | |
|---|---|
| DATE | DESCRIPTION |
| 12/28/15 | APPROVED PLAN |
| | |
| | |
| | |
| | |

| PERCENT COMPLETE | DATE |
|---|---|
| 30 | |
| 60 | |
| 75 | |
| 90 | |
| 100 | |
| BULLETIN | |

**CITY OF CHICAGO**
DEPARTMENT OF WATER MANAGEMENT
BUREAU OF ENGINEERING SERVICES

LADDER RUNGS

DRAWN: SBW
DESIGNED:
CHECKED:
REVIEWED:

A.20

OF

PN

| | | | | |
|---|---|---|---|---|
| DESIGN: MSA | | | | |
| DRAWN: MSA | | | | |
| CHECKED: TKL | | | | |
| APPROVED: | NO. | BY | DATE | DESCRIPTION |
| DATE: 01/22/2021 | REVISIONS | | | |

CDOT CHICAGO DEPARTMENT OF TRANSPORTATION

C*NECT

DRAINAGE DETAIL
DWM STANDARD DRAWING

JACKSON PARK MOBILITY IMPROVEMENTS

STA. TO STA.

| CONTRACT NO. | TOTAL SHEETS | SHEET NO. |
|---|---|---|
| - | 1434 | 540 |
| PROJECT NO. B-7-203 | DRAWING NO. DD-25 | |
| SCALE: | | |

PLOT DATE: 5/17/2021
PLOT SCALE: 40.0000 ' / in.
FILE NAME: pw:\\CIVIL-PW-INT.dvltech.local\Civiltech Projects\Documents\Projects\3153\CADD\Sheets\Detail Sheets\Drainage\sht-det-d-020.dgn

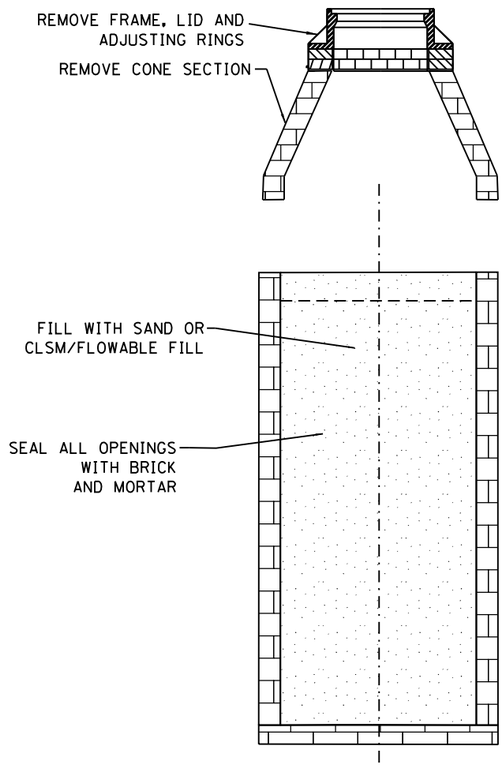


## ABANDON CATCH BASIN

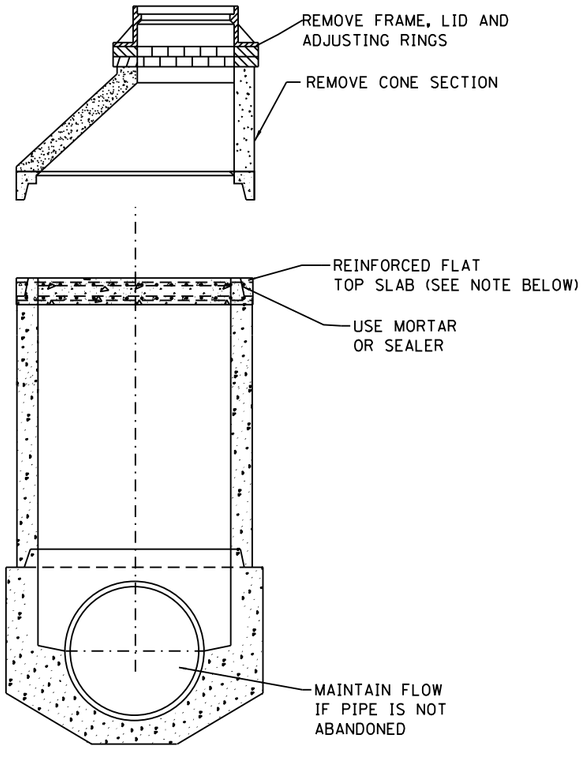


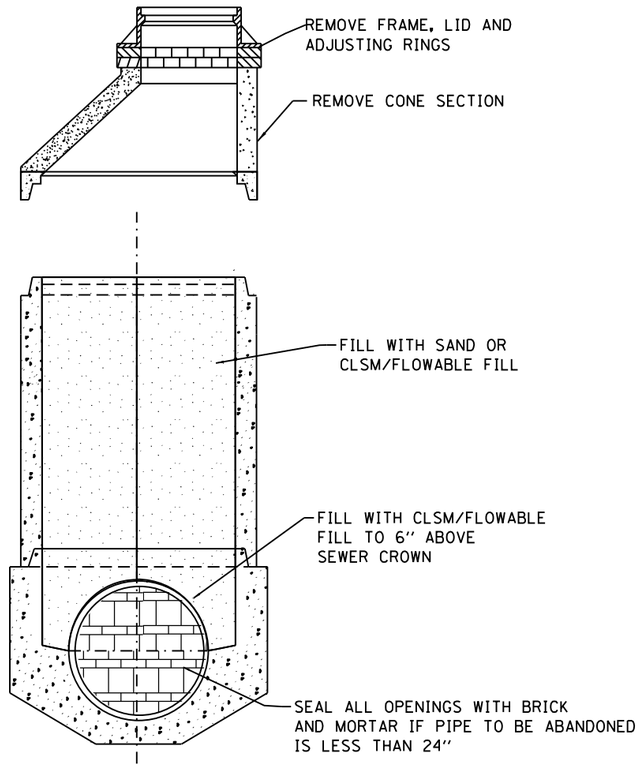


## ABANDON MANHOLES

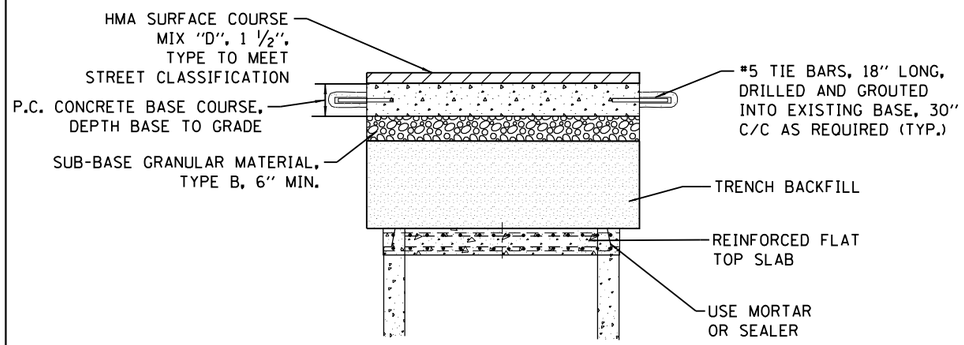


## IN PAVEMENT AREA

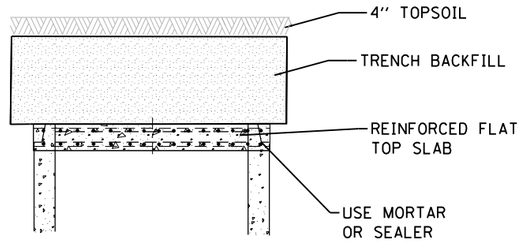


## IN LANDSCAPE AREA

NOTE
REINFORCED FLAT TOP SLAB.
SEE IDOT STD. 602601-03 OR CURRENT MODIFIED WITH NO ACCESS HOLE

| STANDARD REVISIONS | |
|---|---|
| DATE | DESCRIPTION |
| 10/15/15 | APPROVED PLAN |
| | |
| | |
| | |
| | |

| PERCENT COMPLETE | DATE |
|---|---|
| 30 | |
| 60 | |
| 75 | |
| 90 | |
| 100 | |
| BULLETIN | |

**CITY OF CHICAGO**
DEPARTMENT OF WATER MANAGEMENT
BUREAU OF ENGINEERING SERVICES

ABANDONED SEWER STRUCTURE DETAILS

DRAWN: SBW
DESIGNED:
CHECKED:
REVIEWED:

A.21

OF

PN

| | | | | |
|---|---|---|---|---|
| DESIGN: MSA | | | | |
| DRAWN: MSA | | | | |
| CHECKED: TKL | | | | |
| APPROVED: | NO. | BY | DATE | DESCRIPTION |
| DATE: 01/22/2021 | REVISIONS | | | |

CDOT CHICAGO DEPARTMENT OF TRANSPORTATION

C*NECT

**DRAINAGE DETAIL**
**DWM STANDARD DRAWING**

**JACKSON PARK MOBILITY IMPROVEMENTS**

STA. TO STA.

CONTRACT NO. -
PROJECT NO. B-7-203
SCALE:

TOTAL SHEETS: 1434
SHEET NO.: 541
DRAWING NO. **DD-26**

PLOT DATE: 5/17/2021
PLOT SCALE: 40.0000 ' / in.
FILE NAME: pw:\\CIVIL-PW-INT.civilmech.local:CivilTech Projects\Documents\Projects\3153\tCADSheets\Detail Sheets\Drainage\sht-dtl-s-021.dgn

## TYPE I SUPPORT- TYPE A & B

TYPE I SUPPORT STRUCTURE REMAINS IN PLACE.
(USE WHEN SEWER WILL BE INSTALLED AT A FUTURE DATE OR JOB SITE CONDITIONS WILL NOT ACCOMODATE TYPE II SUPPORT INSTALLATION)

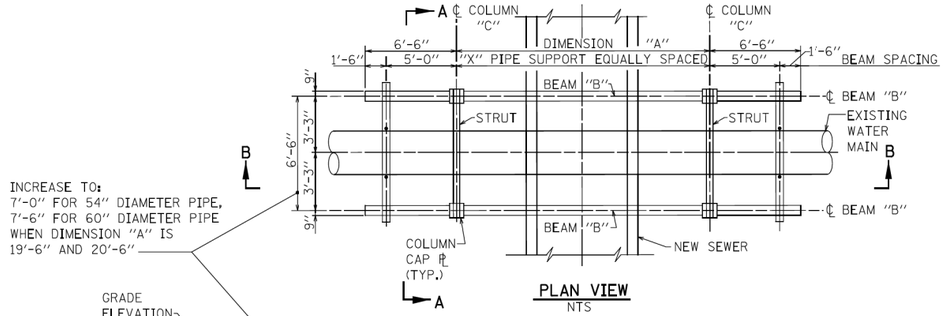


PLAN VIEW
NTS

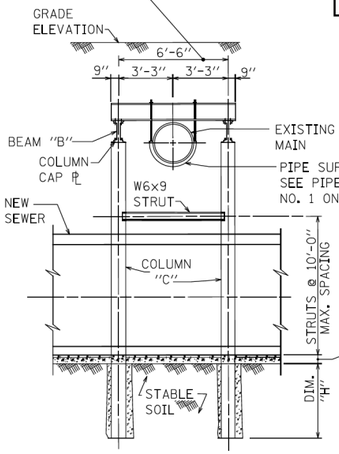


TYPE A - SECTION A
NTS

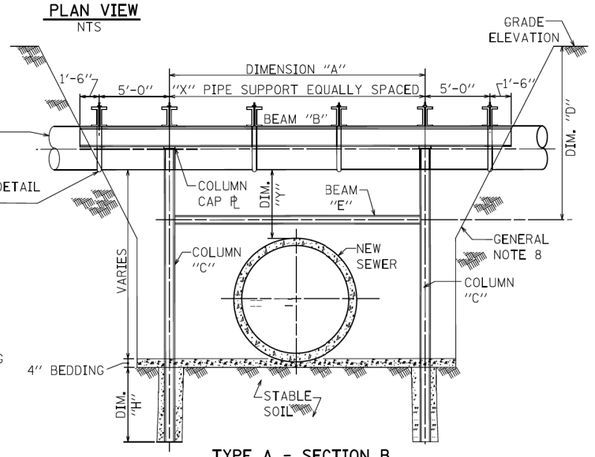


TYPE A - SECTION B
NTS

TYPE I SUPPORT NOTES- TYPE A & B:

1. SEE TYPE I SUPPORT TABLE ON SHEET 2 FOR BEAM MEMBER SIZES.
2. TYPE "A" SUPPORTS EXISTING WATER MAIN UNDERHUNG FROM CROSS BEAMS. TYPE "B" SUPPORTS EXISTING WATER MAIN BEARING ON TOP OF CROSS BEAMS. WHEN DIMENSION "Y" IS LESS THAN 2'-6" TYPE "A" SUPPORT MUST BE USED. MINIMUM DIMENSION "Y" FOLLOW IEPA REGULATIONS.
3. BACKFILL WITH CRUSHED STONE FILL MATERIAL OR CLSM AS REQUIRED.

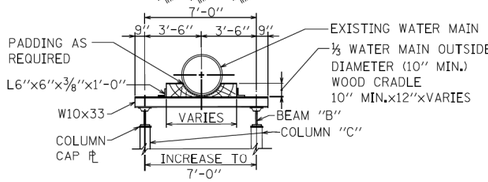


FOR TOP BEARING SUPPORT

TYPE B - SECTION A
NTS

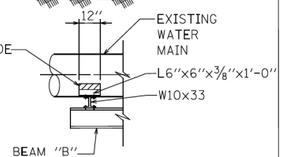


TYPE B - SECTION B
NTS

## TYPE II SUPPORT

TYPE II SUPPORT STRUCTURE WILL BE REMOVED.
(USE WHEN SEWER WILL BE INSTALLED IMMEDIATELY)

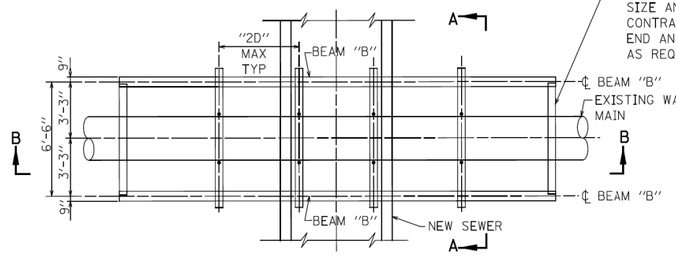


PLAN VIEW
NTS

BEAM MEMBER OF EQUAL DEPTH TO BEAM "B" TO PREVENT ROLLING. SIZE AND CONNECTION BY CONTRACTOR, TYPICAL EACH END AND INTERMEDIATE LOCATIONS AS REQUIRED BY DESIGN

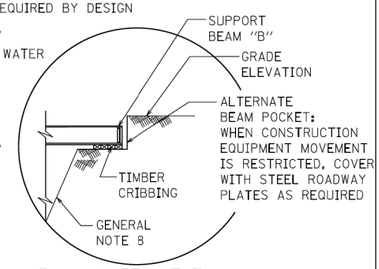


BEAM POCKET DETAIL
NTS

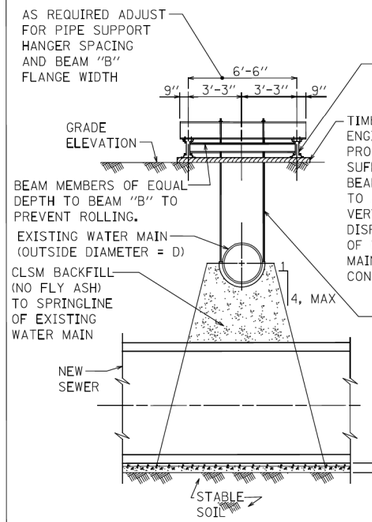


SECTION A
NTS

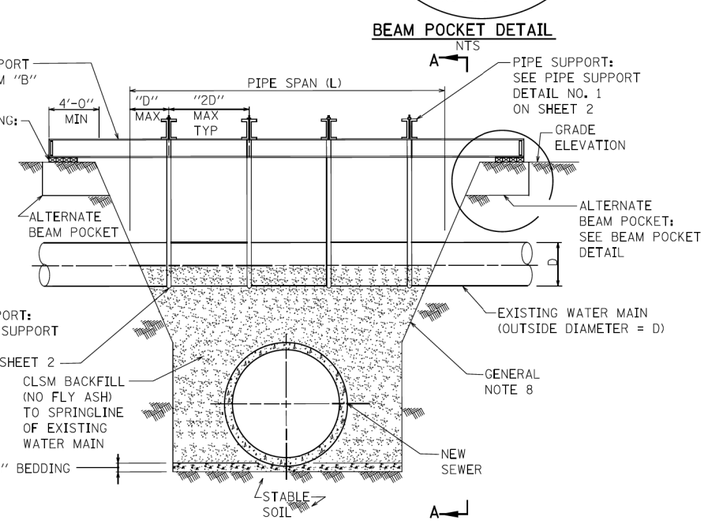


SECTION B
NTS

TYPE II SUPPORT NOTES:

1. THIS DETAIL APPLIES TO THE TEMPORARY SUPPORT OF EXISTING WATER MAINS UP TO 60 INCH INSIDE DIAMETER. SUPPORT BEAMS, CROSS BEAMS, PIPE SUPPORT, AND TIMBER CRIBBING MUST BE REMOVED AFTER CLSM BACKFILL HAS ATTAINED THE COMPRESSIVE STRENGTH THAT SATISFIES THE ENGINEER.
2. CONTRACTOR TO MONITOR CCP EXPOSED GROUTED JOINTS FOR SIGNS OF CRACKING WHILE THE PIPE IS SUPPORTED. IF SMALL CRACKS APPEAR, FILL WITH A FAST SETTING, PORTLAND CEMENT WATER STOP (SIKASET PLUG OR APPROVED EQUAL).

# SUPPORT OF EXISTING WATER MAIN CAST IRON, DUCTILE IRON OR CONCRETE CYLINDER PIPE

GENERAL NOTES FOR TYPE I & II SUPPORTS:

1. TYPE II SUPPORT IS CDWM PREFERRED SUPPORT METHOD. USE TYPE I SUPPORT WHEN SEWER WILL BE INSTALLED AT A FUTURE DATE REQUIRING A SECOND EXCAVATION. TYPE I SUPPORT MUST ALSO BE INSTALLED WHEREVER JOB SITE CONDITIONS WILL NOT ACCOMODATE TYPE II SUPPORT TO BE INSTALLED (SUCH AS LOCATIONS WHERE THE WIDTH OF EXCAVATION WOULD CREATE EXCESSIVE ROADWAY LANE CLOSURES). IT IS THE RESPONSIBILITY OF THE CONTRACTOR TO SELECT THE APPROPRIATE TYPE OF PIPE SUPPORT METHOD FOR CONDITIONS AT THE JOB SITE, OR AS DIRECTED BY THE COMMISSIONER.
2. THESE DETAILS ARE PROVIDED FOR REFERENCE ONLY AND DO NOT REPRESENT A COMPLETE DESIGN. THE CONTRACTOR MUST COMPLETE THE DESIGN FOR EACH LOCATION WHERE WATER MAIN SUPPORT IS TO BE IMPLEMENTED. THE COMPLETE DESIGN MUST INCLUDE (BUT NOT LIMITED TO) STRUCTURAL STEEL CONNECTION DETAILS, COLUMN BRACE SIZE AND SPACING, CONSIDERATION OF BEAM BEARING LOADS ON EXISTING ROADWAY SURFACES OR GRADE, EFFECTS OF BUOYANCY ON THE NEW SEWER DUE TO FLOWABLE CLSM, FOUNDATION DEPTH AND DIAMETER BASED ON BEST AVAILABLE SOIL DATA, AND DESIGN FOR SUPPORT OF EXCAVATIONS.
3. THESE DETAILS WERE DEVELOPED FOR SUPPORT OF WATER MAINS UP TO 60 INCHES IN DIAMETER, UP TO 6 FEET OF COVER AND AASHTO HS 20-44 WHEEL LOADS.
4. DUCTILE IRON PIPE MUST BE WRAPPED IN POLYETHYLENE PRIOR TO PLACEMENT OF BACKFILL.
5. THE CONTRACTOR MUST SUBMIT SHOP DRAWINGS AND CALCULATIONS FOR THE SUPPORT METHOD USED STAMPED BY A LICENSED STRUCTURAL ENGINEER IN THE STATE OF ILLINOIS. THE DESIGN MUST TAKE INTO ACCOUNT THE ACTUAL FIELD VERIFIED DIMENSIONS, SPANS, AND TRIBUTARY LOADING WHICH MAY EXCEED VALUES SHOWN. DWM MAINTAINS A RECORD OF BURIED TYPE I SUPPORT STRUCTURES AND THEIR LOCATIONS. THE CONTRACTOR MUST FURNISH AS - BUILT DRAWINGS FOR THIS RECORD.
6. THE DESIGN OF THE MAIN SUPPORT BEAM "B" MUST LIMIT TOTAL DEFLECTION OF THE PIPE TO L/480 OF THE PIPE SPAN (L).
7. MATERIAL PROPERTIES MUST MEET THE FOLLOWING CRITERIA:

| | |
|---|---|
| W-SHAPES | ASTM A992 GRADE 50 |
| CHANNELS | ASTM A36 |
| PLATES & BARS | ASTM A36 |
| THREADED RODS | ASTM A36 |
| HSS SHAPES | ASTM A500 GRADE B |
| HIGH STRENGTH BOLTS | ASTM A325 N-BOLTS |
| CLSM | IDOT STANDARD SPECIFICATIONS SECTION 1019 MIX 2 |

8. THE CONTRACTOR MUST SLOPE TRENCH WALLS OR SHORE EXCAVATIONS FOR CONSTRUCTION SAFETY AND IN ACCORDANCE WITH CURRENT OSHA REQUIREMENTS. THE OVERALL WIDTH OF EXCAVATION, TRAFFIC CONTROL, AND PROTECTION MUST BE SUBMITTED TO CDWM FOR REVIEW PRIOR TO THE START OF CONSTRUCTION.
9. OPEN EXCAVATIONS AND IN PLACE FLOWABLE CLSM BACKFILL MUST BE CORDONED OFF OR COVERED TO PROVIDE PROTECTION AGAINST ACCIDENTIAL FALLING.
10. REFER TO STANDARD SPECIFICATIONS FOR WATER MAIN CONSTRUCTION FOR ADDITIONAL INFORMATION.

| STANDARD REVISIONS | |
|---|---|
| DATE | DESCRIPTION |
| 05/10 | |
| | |
| | |
| | |
| | |

| PERCENT COMPLETE | DATE |
|---|---|
| 30 | |
| 60 | |
| 75 | |
| 90 | |
| 100 | |
| BULLETIN | |

**CITY OF CHICAGO**
DEPARTMENT OF WATER MANAGEMENT
BUREAU OF ENGINEERING SERVICES

SUPPORT OF EXISTING WATER MAIN, CAST IRON, DUCTILE IRON, OR CONCRETE CYLINDER PIPE

DRAWN: — DESIGNED: — CHECKED: — REVIEWED: —

1 OF 2

___ OF ___

PN _____

| | | | | |
|---|---|---|---|---|
| DESIGN: EML | | | | |
| DRAWN: EML | | | | |
| CHECKED: TKL | | | | |
| APPROVED: | NO. | BY | DATE | DESCRIPTION |
| DATE: 01/22/2021 | REVISIONS | | | |

CDOT CHICAGO DEPARTMENT OF TRANSPORTATION

C*NECT

**DRAINAGE DETAIL**
**DWM STANDARD DRAWING**

**JACKSON PARK MOBILITY IMPROVEMENTS**

STA. TO STA.

| | |
|---|---|
| CONTRACT NO. | - |
| PROJECT NO. | B-7-203 |
| SCALE: | |
| TOTAL SHEETS | 1434 |
| SHEET NO. | 542 |
| DRAWING NO. | **DD-27** |

PLOT DATE: 5/17/2021
PLOT SCALE: 40.0000 ' / in.
FILE NAME: pw:\CIVIL-PW\INT civiltech\local\CivilTech Projects\Documents\Projects\3133\CAD\Sheets\Detail Sheets\Drainage\sht-dtl-d-027.dgn

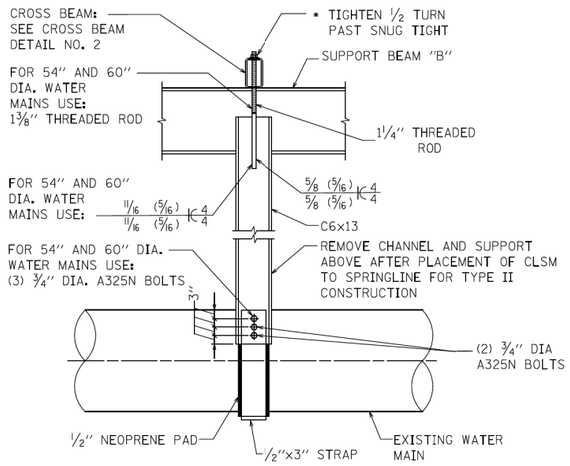


## ① PIPE SUPPORT DETAIL
NTS

1. MINIMUM TWO PIPE SUPPORTS PER PIPE SEGMENT.
2. WELDED CONNECTION MAY BE SUBSTITUTED FOR BOLTED CONNECTION WHEN SUPPORT STRUCTURE IS TO REMAIN IN PLACE PERMANENTLY.

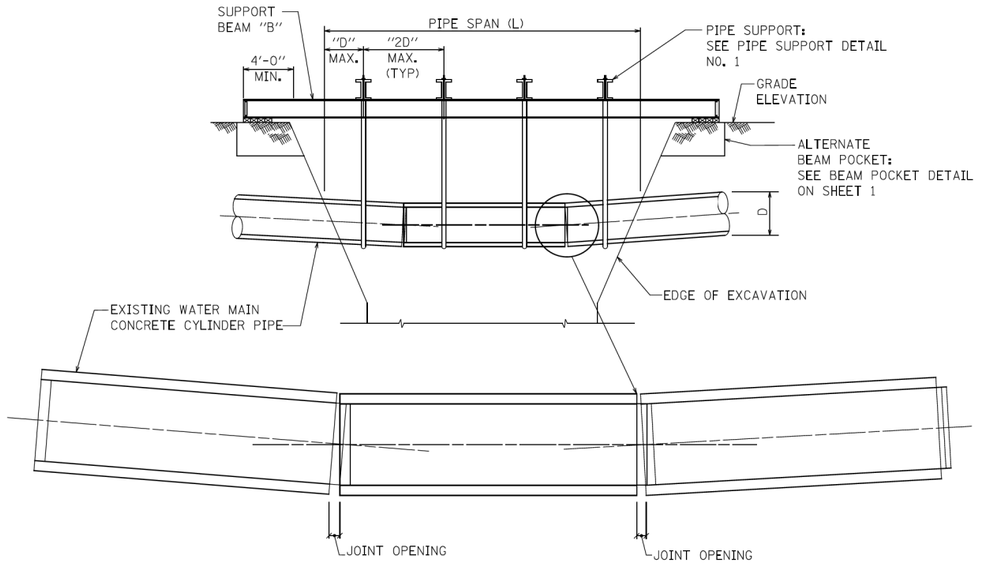


### CONCRETE CYLINDER PIPE DEFLECTION CRITERIA

* CONTRACTOR TO TIGHTEN ADJUSTING LOAD IN EACH HANGER SUCH THAT PIPE JOINTS DO NOT OPEN EXCEEDING MANUFACTURE'S RECOMMENDATIONS. LEAKAGE OR FAILURE OF THE WATER MAIN IS THE CONTRACTOR'S RESPONSIBILITY.

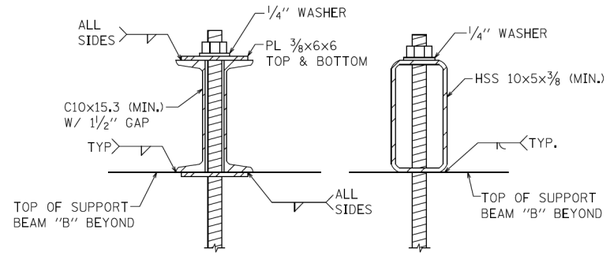


TYPE A TYPE B

NOTE: CONTRACTOR MAY SELECT CROSS BEAM TYPE

## ② CROSS BEAM DETAIL
NTS

1. CONTRACTOR WILL TACK WELD NUT OR SUPPLY A SECOND NUT AS APPROPRIATE FOR LOCKING NUT ROTATION ON THREADED RODS USED FOR PERMANENT AND TEMPORARY WATER MAIN SUPPORT.
2. CONTRACTOR WILL RECORD SUPPORT BEAM AND WATER MAIN ELEVATIONS AND THEN MONITOR ELEVATIONS DURING CONSTRUCTION FOR ANY SETTLEMENT. UNEVEN SETTLEMENT SHOULD BE ANTICIPATED AND SHIMS PROVIDED.

| LOCATION | SHEET NO. | BID ITEM NO. | DIA. OF SEWER | DIMENSION "A" | "X" NUMBER OF SPACES | DIMENSION "D" | BEAM SIZE "E" | DIMENSION "H" | TYPE I SUPPORT - TYPE A — WATER MAIN HANGING FROM STRUCTURE | | | | | | TYPE I SUPPORT - TYPE B — WATER MAIN BEARING ON STRUCTURE | | | | | |
|---|---|---|---|---|---|---|---|---|---|---|---|---|---|---|---|---|---|---|---|---|
| | | | | | | | | | 24", 30" & 36" DIA. W.M. | | 42" & 48" DIA. W.M. | | 54" & 60" DIA. W.M. | | 24", 30" & 36" DIA. W.M. | | 42" & 48" DIA. W.M. | | 54" & 60" DIA. W.M. | |
| | | | | | | | | | BEAM "B" | COLUMN "C" | BEAM "B" | COLUMN "C" | BEAM "B" | COLUMN "C" | BEAM "B" | COLUMN "C" | BEAM "B" | COLUMN "C" | BEAM "B" | COLUMN "C" |
| | | | 30" & 36" | 13'-0" | 3 | | | | W10x39 | W8x24 | W12x40 | W8x24 | W14x43 | W8x31 | W12x40 | W8x24 | W14x43 | W8x24 | W14x43 | W8x31 |
| | | | 42" & 48" | 14'-0" | 3 | | | | W10x39 | W8x24 | W12x40 | W8x24 | W14x43 | W8x31 | W12x40 | W8x24 | W14x43 | W8x24 | W14x43 | W8x31 |
| | | | 54" & 60" | 15'-0" | 3 | | | | W10x39 | W8x24 | W12x40 | W8x24 | W14x61 | W8x31 | W12x40 | W8x24 | W14x43 | W8x24 | W14x61 | W8x31 |
| | | | 66" & 72" | 16'-0" | 4 | | | | W12x40 | W8x24 | W14x43 | W8x24 | W14x61 | W8x31 | W12x40 | W8x24 | W14x43 | W8x24 | W14x61 | W8x31 |
| | | | 78" & 84" | 17'-6" | 4 | | | | W12x45 | W8x31 | W14x48 | W8x31 | W14x68 | W8x40 | W14x48 | W8x31 | W14x61 | W8x31 | W14x68 | W8x40 |
| | | | 90" & 96" | 18'-6" | 4 | | | | W14x48 | W8x31 | W14x53 | W8x31 | W14x82 | W8x40 | W14x53 | W8x31 | W14x61 | W8x31 | W14x82 | W8x40 |
| | | | 102" & 108" | 19'-6" | 4 | | | | W14x53 | W8x31 | W14x61 | W8x31 | W14x90 | W8x40 | W14x53 | W8x31 | W14x61 | W8x31 | W14x90 | W8x40 |
| | | | 114" & 120" | 20'-6" | 4 | | | | W14x61 | W8x31 | W14x68 | W8x31 | W14x99 | W8x40 | W14x61 | W8x31 | W14x68 | W8x31 | W14x99 | W8x40 |

### TYPE I SUPPORT TABLE

# SUPPORT OF EXISTING WATER MAIN CAST IRON, DUCTILE IRON OR CONCRETE CYLINDER PIPE DETAILS

| STANDARD REVISIONS | |
|---|---|
| DATE | DESCRIPTION |
| 05/10 | |
| | |
| | |
| | |
| | |

| PERCENT COMPLETE | DATE |
|---|---|
| 30 | |
| 60 | |
| 75 | |
| 90 | |
| 100 | |
| BULLETIN | |

**CITY OF CHICAGO**
DEPARTMENT OF WATER MANAGEMENT
BUREAU OF ENGINEERING SERVICES

SUPPORT OF EXISTING WATER MAIN, CAST IRON, DUCTILE IRON, OR CONCRETE CYLINDER PIPE

DRAWN: ___ DESIGNED: ___ CHECKED: ___ REVIEWED: ___

2 OF 2

___ OF ___

PN _____

| | | | | |
|---|---|---|---|---|
| DESIGN: EML | | | | |
| DRAWN: EML | | | | |
| CHECKED: TKL | | | | |
| APPROVED: | NO. | BY | DATE | DESCRIPTION |
| DATE: 01/22/2021 | REVISIONS | | | |

CDOT CHICAGO DEPARTMENT OF TRANSPORTATION

C²NECT

**DRAINAGE DETAIL**
**DWM STANDARD DRAWING**

**JACKSON PARK MOBILITY IMPROVEMENTS**

STA. TO STA.

| | |
|---|---|
| CONTRACT NO. | - |
| PROJECT NO. | B-7-203 |
| SCALE: | |
| TOTAL SHEETS | 1434 |
| SHEET NO. | 543 |
| DRAWING NO. | **DD-28** |

PLOT DATE: 5/17/2021
PLOT SCALE: 40.0000 ' / in.
FILE NAME: pw:\\CITYIL-PW-INT.dsiltech.local\Civiltech Projects\Documents\Projects\3133\CADSheets\Detail Sheets\Drainage\sht-dtl-d028.dgn

## LEGEND

| | |
|---|---|
| ℄ | CENTER LINE |
| —○ | PIPE TURNING UP |
| —⊃ | PIPE TURNING DOWN |
| —► | DIRECTION OF FLOW |
| ⊼ | CHECK VALVE |
| Ø | DIAMETER |

## ABBREVIATION LIST

| | |
|---|---|
| P # | PUMP |
| CFS | CUBIC FEET PER SECOND |
| AFF | ABOVE FINISHED FLOOR |
| EL. | ELEVATION |
| CONC. | CONCRETE |
| DIA. | DIAMETER |
| EA. | EACH |
| INV. | INVERT |
| TYP. | TYPICAL |
| MH | MANHOLE |
| DISC. | DISCHARGE |
| MC # | MANHOLE COVER |
| INV. EL. | INVERT ELEVATION |
| I.P.D. | INSIDE PIPE DIAMETER |
| O.P.D. | OUTSIDE PIPE DIAMETER |
| MIN. | MINIMUM |
| DWG. | DRAWING |
| D.I.P. | DUCTILE IRON PIPE |
| AH # | ACCESS HATCH |

## GENERAL NOTES

1. PRIOR TO SUBMITTING BID, THE CONTRACTOR MUST VISIT THE PROJECT SITE AND THROUGHLY EVALUATE EXISTING CONDITIONS AND DETERMINE HOW THEY AFFECT WORK. THE CONTRACTOR MUST INCLUDE IN BID ANY ALTERATIONS, RELOCATING, REROUTING, ETC. OF PIPING, AND EQUIPMENT REQUIRED FOR INSTALLATION OF WORK.

2. THE CONTRACTOR MUST SUBMIT COMPLETE, COORDINATED SHOP DRAWING INCLUDING ALL WORK AND MATERIALS, PIPE LOCATIONS AND ELEVATIONS, CORES THROUGH SLAB AND/OR BEAMS, ETC., WHICH MUST BE APPROVED BY THE ENGINEER, PRIOR TO STARTING WORK.

3. ALL WORK AND MATERIALS MUST BE IN ACCORDANCE WITH SPECIFICATIONS. ALL WORK MUST MEET ALL APPLICABLE LOCAL AND STATE CODES AND ORDINANCES. CONTRACTOR MUST SUBMIT ALL WORK AND MATERIALS, WHICH MUST BE APPROVED BY THE ENGINEER, PRIOR TO INSTALLATION.

4. PROTECT STRUCTURE FROM ANY DAMAGE WHICH MAY OCCUR DURING INSTALLATION OF MECHANICAL WORK. ANY DAMAGE TO FACILITIES MUST BE REPAIRED, REPLACED OR RESTORED TO THE ORIGINAL CONDITION AND SATISFACTION OF THE ENGINEER.

5. CUTTING AND PATCHING OF STRUCTURES MUST BE COORDINATED THROUGHLY, WITH WRITTEN APPROVAL BY THE ENGINEER.

6. PROVIDE DUCTILE IRON SLEEVES FOR PIPING THROUGH WALLS.

7. THE GENERAL RUN AND LOCATION OF THE PIPES AND EQUIPMENTS IS SHOWN ON THE DRAWING. HOWEVER, IT MUST BE THE RESPONSIBILITY OF THE CONTRACTOR TO VERIFY THE SIZES, DIMENSIONS, CLEARANCES, ETC. IF A DIFFERENT ARRANGEMENT THAN THAT SHOWN IS PROPOSED, IT MUST BE THE CONTRACTOR'S RESPONSIBILITY TO PROVIDE AND INSTALL SUCH WORK AS MAY BE REQUIRED WITHOUT ADDITIONAL CHARGE TO THE OWNER.

8. DRAWINGS ARE INTENDED TO SHOW THE PROPER SIZE AND GENERAL LOCATION OF THE EQUIPMENT, PIPING, ETC. CONTRACTOR MUST VERIFY ALL DIMENSIONS AND FIELD CONNECTIONS.

9. CONTRACTOR TO COORDINATE WITH ALL TRADES BEFORE INSTALLING ANY PIPING, EQUIPMENT, ETC.

10. THE CONTRACTOR MUST VERIFY CLEARANCES AND STRUCTURAL CONDITIONS PRIOR TO PIPING INSTALLATION AND ROUTING.

PLOT DATE: 5/17/2021
PLOT SCALE: 40.0000 ' / in.
FILE NAME: pw:\\CIVIL-PW-NT.dot1tech.local:CivilTech Projects\Documents\Projects 3153\CADD\Sheets\D&U\Pump Stations\ps-ps-001.dgn

| | | | | | |
|---|---|---|---|---|---|
| DESIGN: MSA | | | | | |
| DRAWN: MSA | | | | | |
| CHECKED: TKL | | | | | |
| APPROVED: | NO. | BY | DATE | DESCRIPTION | |
| DATE: 01/22/2021 | REVISIONS | | | | |

CHICAGO DEPARTMENT OF TRANSPORTATION

C*NECT

**PUMP STATION**
**MECHANICAL GENERAL NOTES**

**JACKSON PARK MOBILITY IMPROVEMENTS**

STA. TO STA.

| | |
|---|---|
| CONTRACT NO. | - |
| PROJECT NO. | B-7-203 |
| SCALE: | |

| TOTAL SHEETS | SHEET NO. |
|---|---|
| 1434 | 544 |

DRAWING NO. **PS-1**

# GENERAL NOTES

## DESIGN CRITERIA

1. STRUCTURE DESIGNED IN ACCORDANCE WITH THE CITY OF CHICAGO BUILDING CODE.

2. SUPERIMPOSED SERVICE LOADS:
   ROOF LIVE LOAD ..... 25 PSF
   FLOOR LIVE LOAD ..... 50 PSF
   SUSPENDED PIPING, LIGHTS, DUCT WORKS, CEILING ETC ..... 10 PSF

## STRUCTURAL CAST-IN-PLACE CONCRETE

1. DESIGNED IN ACCORDANCE WITH BUILDING CODE REQUIREMENTS FOR REINFORCED CONCRETE BY AMERICAN CONCRETE INSTITUTE ACI 318 - LATEST EDITION.

2. CONSTRUCTION MUST BE PERFORMED IN ACCORDANCE WITH ACI 301-SPECIFICATIONS FOR STRUCTURAL CONCRETE FOR BUILDINGS - LATEST EDITION.

3. ALL DETA12. MINIMUM REINFORCEMENT HORIZONTAL AND VERTICAL ON EACH FACE MUST BE #15 @ 305 OUTER TO CENTER UNLESS NOTED OTHERWISE. 13. MISCELLANEOUS DETAILS SHOWN ON THE DRAWINGS ARE TYPICAL. 14. REINFORCEMENT BARS MUST HAVE DEVELOPMENT AND LAP SPLICE LENGTH CONFORMING TO BUILDING CODE REQUIREMENTS OF ACI-318 - LATEST EDITION. ILS, SECTIONS, AND NOTES SHOWN ON THE DRAWINGS ARE INTENDED TO BE TYPICAL AND WILL APPLY TO SIMILAR SITUATUIONS ELSEWHERE UNLESS OTHERWISE INDICATED.

4. ALL CAST-IN-PLACE CONCRETE MUST BE OF THE TYPES AND HAVING MINIMUM (EXCEPT CONCRETE WORK MATS) F'c = 4.0 KSI AT 28 DAYS. CONCRETE WORK MAT, F'c = 2.0 KSI AT 28 DAYS.

5. ALL CONSTRUCTION JOINTS MUST BE SHOWN ON THE DRAWINGS OR AS APPROVED BY THE ENGINEER. KEYS MUST BE PROVIDED AT ALL CONSTRUCTION JOINTS EXCEPT WHERE NOTED. KEY DETAILS WILL BE AS SHOWN IN TYPICAL WALL KEYS DETAIL, UNLESS SHOWN ON THE DRAWING. PROVIDE WATER STOPS AT ALL JOINTS AND WHERE PIPE INTERSECTS WITH CONCRETE STRUCTURE. WATER STOP MUST BE PROVIDED PER SPECIFICATIONS.

6. ALL EMBEDDED STEEL, ANCHORS, DRAIN OUTLETS, EMBEDDED METAL, ETC. MUST BE IN PLACE BEFORE CONCRETE IS PLACED, EXCEPT AS NOTED.

7. ALL DIMENSIONS NOTED FOR INVERT, GRADE TOP OR BOTTOM OF CONCRETE STRUCTURE ARE IN FEET (FT) EXCEPT AS NOTED.

8. ALL REINFORCING BARS MUST BE NEW BILLET STEEL CONFORMING TO THE STANDARDS OF ASTM A615, Fy = 60 KSI. ALL CONCRETE REINFORCEMENT MUST BE DETAILED FABRICATED, LABELED, SUPPORTED, SPACED IN FORMS AND SECURED IN PLACE IN ACCORDANCE WITH THE PROCEDURES AND REQUIREMENTS OUTLINED IN THE LATEST EDITION OF THE "BUILDING CODE REQUIREMENTS FOR REINFORCED CONCRETE" ACI 318 AND THE "MANUAL OF STANDARD PRACTICE FOR DETAILING REINFORCED CONCRETE STRUCTURES" ACI 315.

9. UNLESS OTHERWISE SHOWN, THE CLEAR COVER FOR REINFORCING STEEL MUST BE AS FOLLOWS:

   A. SLABS AND WALLS EXPOSED TO EARTH, WATER, OR WEATHER ..... 2"

   B. EXTERIOR SURFACE WHERE CONCRETE IS DEPOSITED AGAINST THE GROUND .. 3"

10. ALL REINFORCEMENT BARS MUST BE EPOXY COATED

11. ALL VERTICAL DOWELS MUST MATCH THE VERTICAL REINFORCEMENT UNLESS NOTED OTHERWISE.

## STRUCTURAL PRE-CAST CONCRETE

1. ALL PRE-CAST CONCRETE MUST BE OF THE TYPES AND HAVING MINIMUM F'c = 5.0 KSI AT 28 DAYS.

2. ALL EMBEDDED STEEL, ANCHORS, PIPE SLEEVES, DRAIN OUTLETS, EMBEDDED METAL, ETC. MUST BE PROVIDED IN PRE-CAST PANELS AS AND WHERE REQUIRED.

3. ALL REINFORCING BARS MUST BE EPOXY COATED NEW BILLET STEEL CONFORMING TO THE STANDARDS OF ASTM A615, Fy = 60 KSI. ALL CONCRETE REINFORCEMENT MUST BE DETAILED FABRICATED, LABELED, SUPPORTED, SPACED IN FORMS AND SECURED IN PLACE IN ACCORDANCE WITH THE PROCEDURES AND REQUIREMENTS OUTLINED IN THE LATEST EDITION OF THE "BUILDING CODE REQUIREMENTS FOR REINFORCED CONCRETE" ACI 318 AND THE "MANUAL OF STANDARD PRACTICE FOR DETAILING REINFORCED CONCRETE STRUCTURES" ACI 315.

4. PRE-CAST PUMP STATION AND DISCHARGE PIT SECTIONS MUST HAVE MINIMUM REINFORCEMENT AS SPECIFIED IN ASTM C478.

5. UNLESS OTHERWISE SHOWN, THE CLEAR COVER FOR REINFORCING STEEL MUST BE AS FOLLOWS:

   A. PRE-CAST WALLS EXPOSED TO EARTH, WATER, OR WEATHER ..... 1"

   B. PRE-CAST SLABS EXPOSED TO EARTH, WATER, OR WEATHER ..... 1 1/2"

   C. PRE-CAST SLABS NOT EXPOSED TO EARTH, WATER, OR WEATHER .... 1"

6. CONTRACTOR TO SUBMIT DESIGN CALCULATIONS AND SHOP DRAWINGS SIGNED AND STAMPED BY STRUCTURAL ENGINEER REGISTERED IN THE STATE OF ILLINOIS.

## STRUCTURAL STEEL

1. ALL DETAILING, FABRICATION AND ERECTION OF STRUCTURAL STEEL MUST CONFORM TO REQUIREMENTS AS SPECIFIED IN MANUAL OF STEEL CONSTRUCTION BY AMERICAN INSTITUTE OF STEEL CONSTRUCTION (AISC), LATEST EDITION.

2. AFTER FABRICATION, ALL STEEL MUST BE CLEANED OF ALL RUST, LOOSE MILL SCALE AND ALL OTHER FOREIGN MATERIALS. PRIMING IS REQUIRED FOR ALL STRUCTURAL STEEL WHERE IT IS NOT GALVANIZED.

3. ALL STRUCTURAL STEEL, SHAPES AND PLATES MUST BE AASHTO M270 GRADE 36 STEEL AND MUST BE DESIGNED, FABRICATED AND ERECTED IN ACCORDANCE WITH THE LATEST AISC SPECIFICATIONS, INCLUDING COMMENTARY AND CODE OF STANDARD PRACTICE.

4. ALL ANCHOR BOLTS MUST BE ASTM A325, WITH HEAVY HEXAGONAL NUTS AND HEAVY WASHERS.

5. ALL WELDING WORK MUST BE IN ACCORDANCE WITH THE LATEST AWS CODE FOR ARC AND GAS WELDING IN BUILDING CONSTRUCTION AND THE AISC SPECIFICATIONS USING E70XX LOW-HYDROGEN ELECTRODES.

6. ALL STRUCTURAL STEEL MUST BE SHOP PAINTED WITH A RUST INHIBITIVE GRAY PRIMER. NO PAINT MUST BE APPLIED ON CONTACT SURFACES OF BOLTED CONNECTIONS OR WITHIN 2" OF SURFACES TO BE WELDED.

## COORDINATION

1. ALL DIMENSIONS SHOWN ON THE STRUCTURAL DRAWINGS MUST BE VERIFIED AT SITE BY THE GENERAL CONTRACTOR BEFORE CONSTRUCTION AND ORDERING ANY MATERIAL AND ANY DISCREPANCY MUST BE REPORTED TO THE COMMISSIONER IMMEDIATELY.

2. DO NOT SCALE DRAWING PLANS, DETAILS, SECTIONS, ETC.

3. THE INFORMATION CONTAINED ON THE DRAWINGS IS, IN ITSELF INCOMPLETE AND VOID, UNLESS USED IN CONJUCTION WITH ALL OF THE CONTRACT DOCUMENTS, ALL SPECIFICATIONS, TRADE PRACTICES, APPLICABLE STANDARDS, CODES, ETC. INCORPORATED THEREIN BY REFERENCES.

4. THE USE OF THE PLANS MUST BE RESTRICTED TO THE ORIGINAL SITE FOR WHICH THEY WERE PREPARED. ANY REPRODUCTION OR DISTRIBUTION IS LIMITED TO SUCH USE. ANY DISCLOSURE, REUSE OR DISCLOSURE BY ANY OTHER METHOD IN WHOLE OR IN PART OR FOR ANY PURPOSE OTHER THAN THAT AS CONTRACT DOCUMENT IS PROHIBITED.

5. FOR ALL EMBEDMENT, PIPE SLEEVES IN PRE-CAST PUMP STATIONS, COORDINATE WITH THE MECHANICAL AND ELECTRICAL DRAWINGS.

6. FOR SOIL BORING LOGS, SEE BORING LOG SHEETS.

PLOT DATE: 5/17/2021
PLOT SCALE: 40.0000 ' / in.
FILE NAME: pw:\\CIVIL-PW-JNT.cdot.tech.local\CivilTech Projects\Documents\Projects\3133\CAD\Sheets\D&U\Pump Stations\ps-008.dgn

| | | | | | |
|---|---|---|---|---|---|
| DESIGN: MSA | | | | | |
| DRAWN: MSA | | | | | |
| CHECKED: TKL | | | | | |
| APPROVED: | NO. | BY | DATE | DESCRIPTION | |
| DATE: 01/22/2021 | REVISIONS | | | | |

CDOT CHICAGO DEPARTMENT OF TRANSPORTATION

C*NECT

**PUMP STATION**
**STRUCTURAL GENERAL NOTES**

**JACKSON PARK MOBILITY IMPROVEMENTS**

STA. TO STA.

| | | | |
|---|---|---|---|
| CONTRACT NO. - | | TOTAL SHEETS 1434 | SHEET NO. 545 |
| PROJECT NO. B-7-203 | | DRAWING NO. **PS-2** | |
| SCALE: | | | |

## GENERAL NOTES

1. THE ELECTRICAL WORK IS TO BE EXECUTED IN ACCORDANCE WITH THE CURRENTLY APPLICABLE NATIONAL ELECTRIC CODES, STATE AND CITY OF CHICAGO CODES AND THE ATTACHED SPECIFICATIONS. ANY MODIFICATIONS AND/OR ELECTRICAL ADDITIONS TO THESE PLANS REQUIRED FOR PROPER COMPLIANCE TO ANY APPLICABLE CODES MUST BE THE RESPONSIBILITY OF THE CONTRACTOR AND MUST BE INCLUDED IN HIS ORIGINAL BID.

2. CONTRACTOR MUST PROVIDE LABOR, EQUIPMENT AND MATERIALS NECESSARY TO COMPLETE SITE ELECTRICAL SYSTEMS AS DESCRIBED IN THE SPECIFICATIONS.

3. CONTRACTOR MUST FURNISH AND INSTALL ALL SECONDARY SERVICE CONDUCTORS IN CONDUITS. CONTRACTOR TO PROVIDE CONDUIT SUPPORTS FOR ALL CONDUITS. ALL ELBOWS MUST BE HEAVY WALL STEEL

4. MATERIALS AND EQUIPMENT MUST BE LISTED AND/OR LABELED BY U.L., ETL, CSA OR ANOTHER RECOGNIZED TESTING LAB.

5. ALL MATERIALS, AND EQUIPMENT MUST BE ERECTED, INSTALLED, TOOLED, CONNECTED, CLEANED, ADJUSTED, TESTED, CONDITIONED, AND PLACED IN SERVICE IN ACCORDANCE WITH THE MANUFACTURER'S DIRECTIONS AND RECOMMENDATIONS.

6. ALL CUTTING, DRILLING AND PATCHING OF MASONRY, STEEL OR IRON WORK BELONGING TO THE FACILITY, MUST BE DONE BY THE CONTRACTOR IN ORDER THAT HIS WORK MAY BE PROPERLY INSTALLED; BUT UNDER NO CONDITIONS MAY STRUCTURAL WORK BE CUT, EXCEPT AT THE DIRECTION OF ENGINEER OR HIS REPRESENTATIVE.

7. VERIFY CLEARANCES FOR ALL ELECTRICAL WORK BEFORE PROCEEDING WITH CONSTRUCTION. COORDINATE USAGE OF AVAILABLE SPACE WITH ALL TRADES. IN THE EVENT OF CONFLICTS, NOTIFY ENGINEER BEFORE PROCEEDING WITH THE WORK.

8. ONE-LINE DIAGRAM SHOWS CIRCUIT IDENTIFICATION, WIRE QUANTITY AND SIZES, AND CONDUIT SIZE WITHIN STRUCTURES. ONE-LINE DIAGRAM ALSO INDICATES ORIGIN AND DESTINATION CIRCUITS.

9. SITE POWER PLANS INDICATE THE GENERAL ROUTING OF UNDERGROUND CONDUIT CABLES.

10. ALL POWER CONDUIT ALONG WALL AND CEILING TO BE EXPOSED.

## LEGEND

- TRANSFORMER WITH PRIMARY AND SECONDARY VOLTAGE AND KVA RATING AS NOTED ON PLANS
- (HP) SUBMERSIBLE PUMP
- CIRCUIT BREAKER
- SURGE ARRESTER
- FUSIBLE DISCONNECT SWITCH
- FLEXIBLE CABLE CORD AS PER MENUFACTURER'S RECOMENDATION
- (M) ComEd METER
- (V) VOLTMETER
- (A) AMMETER
- CONDUIT EXPOSED
- UNDERGROUND DUCT BANK
- CONDUIT UNDERGROUND
- CONDUIT TURNING UP, CONDUIT TURNING DOWN
- GROUNDING ELECTRODE
- GROUND BUS
- GROUND ROD
- JB JUNCTION BOX
- PB PULL BOX
- PUMP CONTROLLER
- (H) HEAVY DUTY HANDHOLE PROPOSED
- (C) CITY ELECTRICAL MANHOLE EXISITNG
- AMERITECH SELECTOR SWITCH
- HIGH VOLTAGE FUSES
- PROPOSED TRANSFORMER
- DUPLEX GFI RECEPTACLE "WP" (WEATHER PROOF)
- (P) PARK DISTRICT MANHOLE
- STRIP HEATER
- MAGNETIC MOTOR STARTER SIZE AS SPECIFIED ON PLAN

## ABBREVIATION LIST

| | |
|---|---|
| A | AMPERE, ALARM |
| AC | ALTERNATING CURRENT |
| ACB | AIR CIRCUIT BREAKER |
| AIC | ASYMMETRIC INTERRUPTING CAPACITY |
| AM | AMMETER |
| AR | ALARM RELAY |
| AS | AMMETER SWITCH |
| AWG | AMERICAN WIRE GAUGE |
| C | CLOSE, CONDUIT OR CONTRACTOR |
| CB | CIRCUIT BREAKER |
| CKT | CIRCUIT |
| CP | CONTROL PANEL |
| CR | CURRENT OR CONTROL RELAY |
| CS | CONTROL STATION |
| DS | DISCONNECT SWITCH |
| EC | EMPTY CONDUIT |
| EMH | ELECTRICAL MANHOLE |
| ER | ELECTRODE RELAY |
| EX | EXISTING |
| FS | FLOW SWITCH |
| G | GREEN OR GROUND |
| GFI | GROUND FAULT INTERRUPTER |
| GRD | GROUND |
| HH | HANDHOLE |
| HOA | HAND-OFF-AUTO |
| HOR | HAND-OFF-REMOTE |
| HP | HORSEPOWER |
| JB | JUNCTION BOX |
| KV | KILOVOLT |
| KVA | KILOVOLT AMPERE |
| KW | KILOWATT |
| KWH | KILOWATT HOUR |
| LR | LOAD RELAY |
| LS | LIMIT OR LEVEL SWITCH |
| M | MAGNETIC MOTOR STARTER |
| MA | MILLIAMPERE |
| MCB | MAIN CIRCUIT BREAKER |
| MCC | MOTOR CONTROL CENTER |
| MFR | MANUFACTURER |
| MH | MANHOLE OR MOUNTING HEIGHT |
| MM | MILLIMETER |
| MOV | MOTOR OPERATED VALVE |
| MS | MANUAL MOTOR STARTER |
| MV | MILLIVOLT |
| N | NEUTRAL |
| NC | NORMALLY CLOSED |
| NO | NORMALLY OPEN, NUMBER |
| O | OPEN |
| OL | OVERLOAD |
| P | PRIMARY |
| PB | PUSH BUTTON OR PULL BOX |
| PC | PROGRAMMABLE CONTROLLER |
| PH | PHASE |
| 1P | SINGLE PHASE/SINGLE POLE |
| 3P | THREE PHASE/THREE POLE |
| SH | SPACE HEATER |
| SS | SELECTOR SWITCH |
| T | THERMOSTAT, TIMER, TRANSFORMER |
| TB | TERMINAL BLOCK |
| TEMP | TEMPERATURE |
| TTC | TELEPHONE TERMINAL CABINET |
| UG | UNDERGROUND |
| V | VOLTS |
| VA | VOLT AMPERE |
| VLS | VALVE LIMIT SWITCH |
| VM | VOLTMETER |
| W | WATTS |
| WP | WEATHERPROOF |
| XFMR | TRANSFORMER |

PLOT DATE: 5/17/2021
PLOT SCALE: 40.0000 ' / in.
FILE NAME: pw:\\CVIL-PW-INT-civiltech.local\Civiltech Projects\Documents\Projects\3153\CADDSheets\D&U\Pump Stations\ht-ps-013.dgn

| | | | | | |
|---|---|---|---|---|---|
| DESIGN: MSA | | | | | |
| DRAWN: MSA | | | | | |
| CHECKED: TKL | | | | | |
| APPROVED: | NO. | BY | DATE | DESCRIPTION | |
| DATE: 01/22/2021 | REVISIONS | | | | |

CDOT CHICAGO DEPARTMENT OF TRANSPORTATION

C*NECT

**PUMP STATION**
**ELECTRICAL GENERAL NOTES**

**JACKSON PARK MOBILITY IMPROVEMENTS**

STA. TO STA.

| | | | |
|---|---|---|---|
| CONTRACT NO. - | | TOTAL SHEETS 1434 | SHEET NO. 546 |
| PROJECT NO. B-7-203 | | DRAWING NO. PS-3 | |
| SCALE: | | | |

DISCHARGE CHAMBER
STA. 9935+64.69, 63.02' LT
RIM EL. 10.75
INV EL. 5.77 (S)
INV EL. 4.22 (NE)

194

PUMP STATION
STA. 9935+49.68, 64.16' LT
RIM EL. 9.50
INV EL. -1.96 (S)
INV EL. 5.77 (N)

CONTROL PANEL
STA. 9935+50.63, 79.56' LT

9935+00

SCALE IN FEET
5 0 5 10

E-CDOT

| | | | | | |
|---|---|---|---|---|---|
| DESIGN: MSA | | | | | |
| DRAWN: MSA | | | | | |
| CHECKED: TKL | | | | | |
| APPROVED: | NO. | BY | DATE | DESCRIPTION | |
| DATE: 01/22/2021 | REVISIONS | | | | |

CHICAGO DEPARTMENT OF TRANSPORTATION

C*NECT

PUMP STATION
PUMP STATION SITE PLAN
59TH ST.

JACKSON PARK MOBILITY IMPROVEMENTS

STA. TO STA.

| | |
|---|---|
| CONTRACT NO. - | TOTAL SHEETS 1434 / SHEET NO. 547 |
| PROJECT NO. B-7-203 | DRAWING NO. PS-4 |
| SCALE: | |

PLOT DATE: 5/17/2021
PLOT SCALE: 10.0000 ' / in.
FILE NAME: pw:\\CIVIL-PW-INT-civiltech.local\Civiltech Projects\Documents\Projects\3153\CADD\Sheets\D&U\Pump Stations\sh-ps-014.dgn

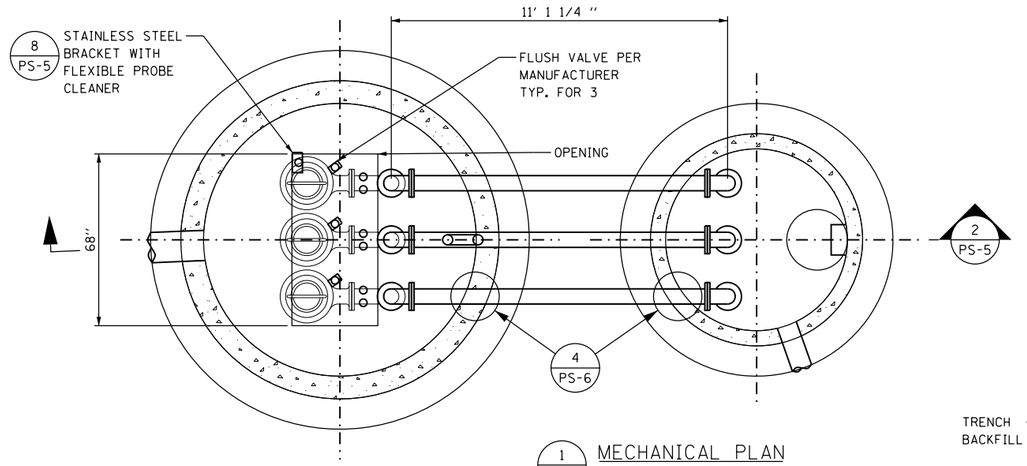


1 PS-5 MECHANICAL PLAN
SCALE: 1'' = 2.5'

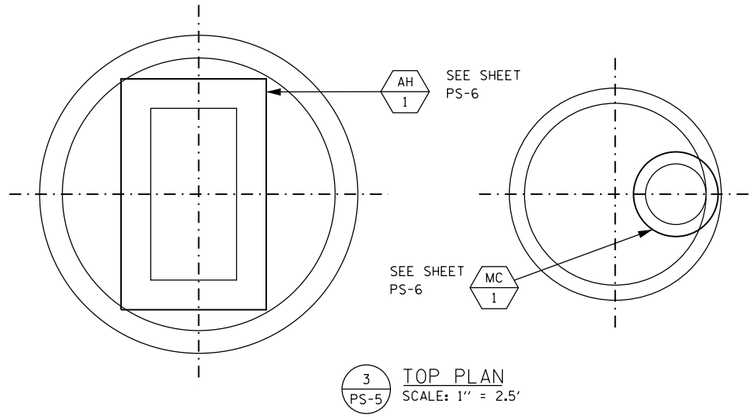


3 PS-5 TOP PLAN
SCALE: 1'' = 2.5'

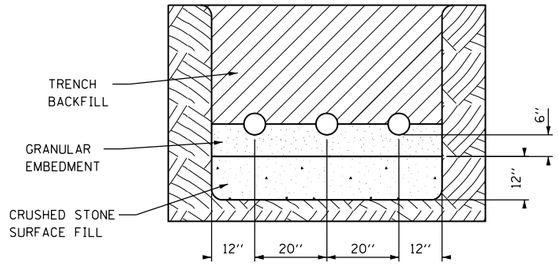


9 PS-5 SECTION 9
GRANULAR EMBEDMENT FOR PIPES
N.T.S.

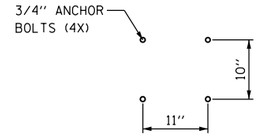


6 PS-5 DETAIL 6
ANCHOR BOLT DIMENSIONS
N.T.S.

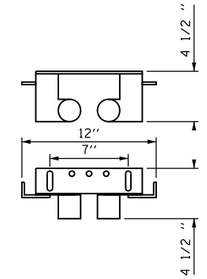


5 PS-5 DETAIL 5
DUAL RAIL UPPER GUIDE BAR BRACKET
N.T.S.

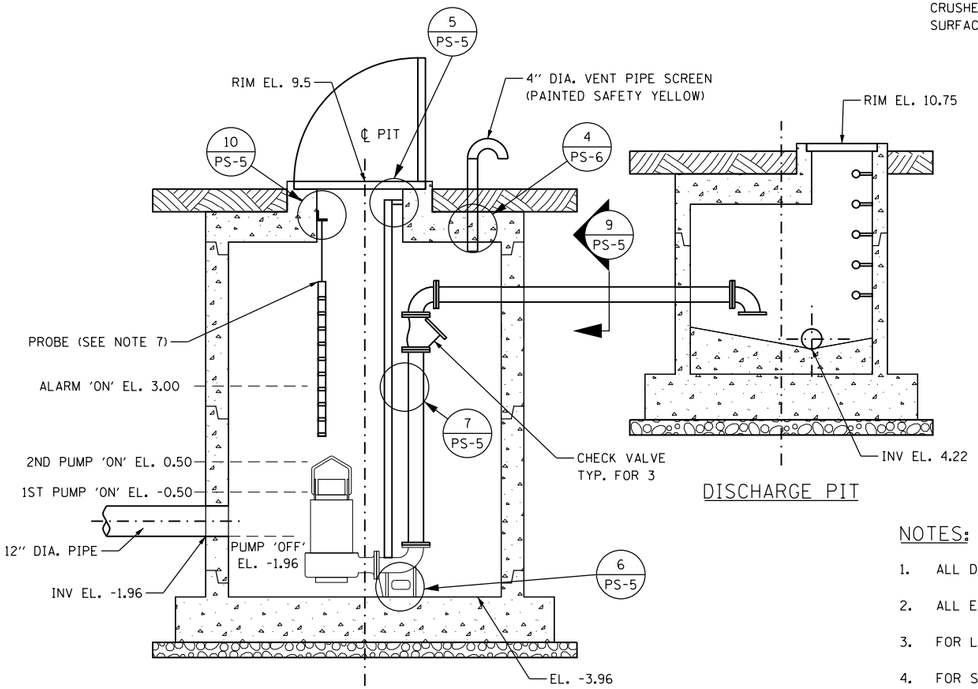


DISCHARGE PIT

PUMP STATION (WET WELL)

2 PS-5 SECTION 2
SCALE: 1'' = 2.5'

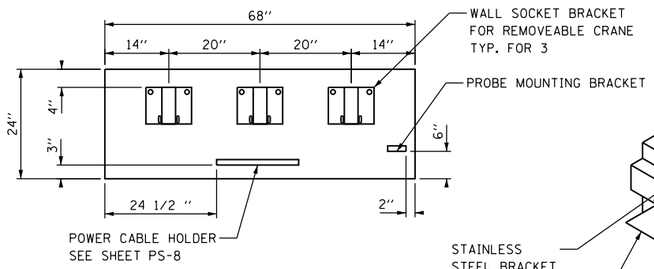


10 PS-5 DETAIL 10
BRACKETS MOUNTING
N.T.S.

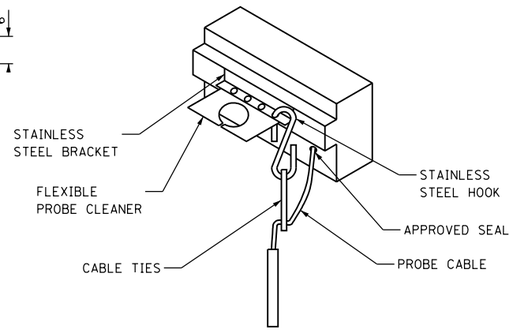


8 PS-5 DETAIL 8
PROBE MOUNTING
N.T.S.

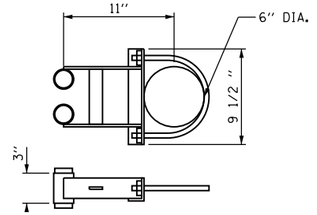


NOTE: DUAL RAIL INTERMEDIATE GUIDE BAR BRACKET (USED FOR) GUIDE BARS OVER 20' LONG SPACED EVERY 10'.

7 PS-5 DETAIL 7
DUAL RAIL INTEMEDIATE GUIDE BAR BRACKET
N.T.S.

## NOTES:

1. ALL DIMENSIONS ARE IN INCHES UNLESS OTHERWISE STATED.
2. ALL ELEVATIONS ARE IN FEET.
3. FOR LEGEND, ABBREVIATION AND GENERAL NOTES SEE SHEET PS-1 .
4. FOR SCHEMATIC, SEQUENCE OF OPERATION AND SCHEDULES AND MECHANICAL NOTES SEE SHEET PS-6 .
5. DETAILS SHOWN ARE FOR GENERAL REFERENCE ONLY. FOR ACTUAL DETAILS REFER TO APPROVED VENDORS INSTALLATION INSTRUCTIONS.
6. FOR EXACT LOCATION OF PUMP STATION & DISCHARGE PIT SEE DRAINAGE PLAN SHEETS AND PUMP STATION SITE PLAN.
7. ADJUST THE LEVELS IN FIELD TO CLOSEST SENSOR NUMBER ON SELECTED PROBE.
8. SEE DETAIL 4 ON SHEET PS-6 .

PLOT DATE: 5/17/2021
PLOT SCALE: 5.0000 ' / in.
FILE NAME: pw:\\CDOT-PW-NT.cdot.tech.local\CivilTech Projects\Documents\Projects\3153\CAD\Sheets\D&U\Pump Station\ps-002.dgn

| | | | | | |
|---|---|---|---|---|---|
| DESIGN: MSA | | | | | |
| DRAWN: MSA | | | | | |
| CHECKED: TKL | | | | | |
| APPROVED: | NO. | BY | DATE | DESCRIPTION | |
| DATE: 01/22/2021 | REVISIONS | | | | |

CDOT CHICAGO DEPARTMENT OF TRANSPORTATION

C*NECT

**PUMP STATION MECHANICAL SECTIONS 59TH ST.**

**JACKSON PARK MOBILITY IMPROVEMENTS**

STA. TO STA.

| | | |
|---|---|---|
| CONTRACT NO. - | TOTAL SHEETS 1434 | SHEET NO. 548 |
| PROJECT NO. B-7-203 | DRAWING NO. PS-5 | |
| SCALE: | | |

## PUMP SCHEDULE

| TAG | SERVICE | TYPE | CFS | HEAD FT | RPM | DISC SIZE | MOTOR DATA HP | VOLT | PH | HZ | REMARKS |
|---|---|---|---|---|---|---|---|---|---|---|---|
| P 1 | STORM WATER | SUBMERSIBLE | 1.14 | 7.48 | 1755 | 6" | 3.9 | 230 | 1 | 60 | • |
| P 2 | STORM WATER | SUBMERSIBLE | 1.14 | 7.48 | 1755 | 6" | 3.9 | 230 | 1 | 60 | • |
| P 3 | STORM WATER | SUBMERSIBLE | 1.14 | 7.48 | 1755 | 6" | 3.9 | 230 | 1 | 60 | • |

• PROVIDE DUAL RAIL SYSTEM WITH DUAL RAIL GUIDE SUPPORT BRACKETS, SUPPORT FOR BASE ELBOW OF PUMPS AND FLUSH VALVE SYSTEM AND ALSO PROVIDE TRIPLEX PUMP CONTROLLER WITH MULTITRODE LIQUID LEVEL CONTROL.

## VENTILATION SCHEDULE

| ROOM NAME | ROOM PURPOSE | ROOM SQF | NATURAL LIGHT & VENTILATION CODE GL. AREA SQF | CODE VENT. AREA SQF | ACTUAL GL. AREA SQF | ACTUAL VENT. AREA SQF | MECHANICAL VENTILATION CODE AIR-SUP LPS | CODE AIR-EXH LPS | ACTUAL AIR-SUP LPS | ACTUAL AIR-EXH LHS | REMARKS |
|---|---|---|---|---|---|---|---|---|---|---|---|
| PUMP STATION (WET WELL) | PUMP LIQUID | 440.46 | 0 | 0 | 0 | 0.32 | 0 | 0 | 0 | 0 | VENTILATION THRU. 4" PIPE |
| DISCHARGE PIT | DISCHARGE | 71.04 | 0 | 0 | 0 | 3.66 | 0 | 0 | 0 | 0 | GRATED COVER |

## ACCESS HATCH / MANHOLE COVER SIZES & TYPES

| TAG | LOCATION | CLEAR OPENING SIZE W x L | OUTSIDE MANHOLE COVER SIZE (EA) W x L | NO. OF COVERS | TYPE OF COVER | MATERIAL | STYLE | REMARKS |
|---|---|---|---|---|---|---|---|---|
| AH 1 | PUMP STATION (WET WELL) | 68" x 34" | 78.5" x 52.5" | 3 | SOLID | HEAVY DUTY ALUMINUM | CHANNEL H20 | SEE MANHOLE COVER NOTES BELOW |
| MC 1 | DISCHARGE PIT | 24" DIA. | 33.5" DIA. | 1 | GRATED | GRAY IRON | - | SEE MANHOLE COVER NOTES BELOW |

## ACCESS HATCH / MANHOLE COVER NOTES

1. MANHOLE COVERS MUST BE BOLTED TO FRAMES WITH STAINLESS STEEL CAP SCREWS.
2. SOLID COVERS MUST BE PROVIDED WITH RING HANDLES.
3. OPENING SIZES & COVER SIZES ARE IN INCHES.
4. VERIFY IN FIELD MANHOLE COVER SIZES AS PER THE MODEL SELECTED, MATCHING THE CORRESPONDING CLEAR OPENINGS.
5. FOR SPECIFICATIONS SEE STRUCTURAL WORK SECTION.

## MECHANICAL NOTES:

1. INSTALL PUMPS AS PER LOCATIONS SHOWN ON DRAWINGS WITH ALL ACCESSORIES.
2. PROVIDE AND INSTALL DUAL RAILS ON PUMPS AS SHOWN ON DWG'S. MATERIAL FOR DUAL RAIL MUST BE 304 STAINLESS STEEL.
3. INSTALL DUAL RAIL UPPER SUPPORT GUIDE BAR BRACKET AS SHOWN ON DWG PS-5 .
4. INSTALL DUAL RAIL INTERMEDIATE SUPPORT GUIDE BAR BRACKET AT EVERY 10' AS SHOWN ON DWG PS-5 .
5. INSTALL FLUSH VALVE SYSTEM ON ALL PUMPS, AS PER MANUFACTURER'S INSTRUCTION.
6. INSTALL HIGH WATER WARNING ALARM THROUGH AUTO-DIALER SYSTEM TO EITHER DEPT. OF STREETS AND SANITATION'S RADIO OR 311 AS DECIDED BY CPD. FOR CONTROLLER SCHEMATIC DIAGRAM SEE DWG PS-23 .
7. INSTALL 4" VENT PIPE.
8. FOR NOTES, LEGEND AND ABBREVIATIONS, REFER DWG PS-1 .
9. ALL DIMENSIONS ARE IN INCHES UNLESS OTHERWISE NOTED.
10. INSTALL PROBE LIQUID CONTROL SYSTEM AS SHOWN ON DWG. PS-5 AS PER MANUFACTURER'S INSTRUCTION.

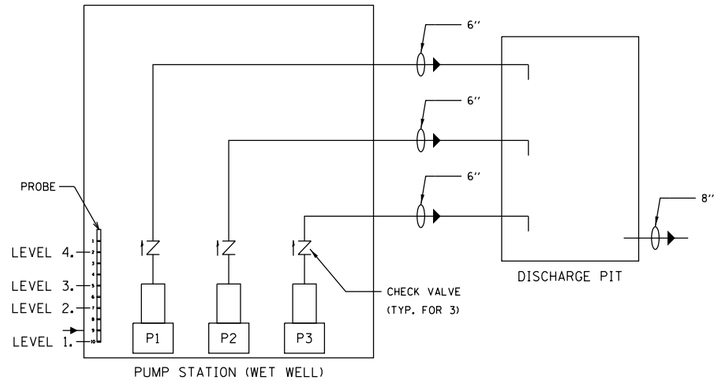


PUMPS SCHEMATIC DIAGRAM
N.T.S.

## SEQUENCE OF OPERATIONS:

1. AT ANY TIME ANY ONE PUMP OR TWO PUMPS WILL BE WORKING DEPEDING UPON THE LEVEL OF WATER. THE THIRD PUMP WILL BE STAND-BY.

   THE CONTROL FUNCTION MUST PROVIDE FOR THE OPERATION OF THE PUMPS UNDER NORMAL CONDITIONS, AND MUST ALTERNATE THE PUMPS ON EACH PUMP DOWN CYCLE TO EQUALIZE THE RUN TIME. IN THE EVENT THE INCOMING FLOW EXCEEDS THE PUMPING CAPACITY OF THE LEAD PUMP, SUBSEQUENT PUMPS MUST AUTOMATICALLY START TO HANDLE THE INCREASED FLOW. AS THE FLOW DECREASES, THE PUMPS MUST CUT OFF AT THE ELEVATIONS AS SHOWN ON THE PLANS.

2. THE FEATURE ON TRIPLEX PUMP CONTROLLER "MAX PUMP OFF TIME" WILL BE USED TO PREVENT WET WELL BECOMING SEPTIC. IF NO PUMP HAS ACTIVATED WITHIN THE SET TIME WHEN WATER IS BELOW LEVEL 2, THE DUTY PUMP WILL RUN. MAXIMUM PUMP OFF TIME CAN BE SET BETWEEN 15 MIN AND 10 HOURS.

OPERATIONAL SEQUENCE AS FOLLOWS: (SEE DWG. PS-5 )
LEVEL 1: PUMP WILL STOP
LEVEL 2: FIRST PUMP WILL START
LEVEL 3: SECOND PUMPS WILL START AND WILL STOP AT LEVEL 2.
LEVEL 4: ALARM ON

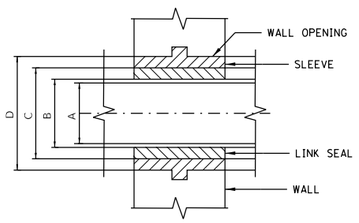


4 / PS-6 DETAIL 4
PIPE PENETRATION
N.T.S.

| NOM. PIPE DIA (IN) | A IN | B IN | C IN | D IN |
|---|---|---|---|---|
| 4 | 4 | 5 | 8 | 9 |
| 6 | 6 | 7 | 10 | 11 |
| 8 | 8 | 9.5 | 12 | 13 |

TABLE FOR DETAIL 4.

PLOT DATE: 5/17/2021
PLOT SCALE: 40.0000 ' / in.
FILE NAME: pw:\\CIVIL-PW-INT.civiltech.local\Civiltech Projects\Documents\Projects\3133\CADD\Sheets\D&U\Pump Stations\ph-ps-003.dgn

| | | | | | |
|---|---|---|---|---|---|
| DESIGN: | MSA | | | | |
| DRAWN: | MSA | | | | |
| CHECKED: | TKL | | | | |
| APPROVED: | | NO. | BY | DATE | DESCRIPTION |
| DATE: 01/22/2021 | | REVISIONS | | | |

CDOT CHICAGO DEPARTMENT OF TRANSPORTATION
C*NECT

**PUMP STATION MECHANICAL NOTES 59TH ST.**

**JACKSON PARK MOBILITY IMPROVEMENTS**

STA. TO STA.

| | | | |
|---|---|---|---|
| CONTRACT NO. - | | TOTAL SHEETS 1434 | SHEET NO. 549 |
| PROJECT NO. B-7-203 | | DRAWING NO. PS-6 | |
| SCALE: | | | |

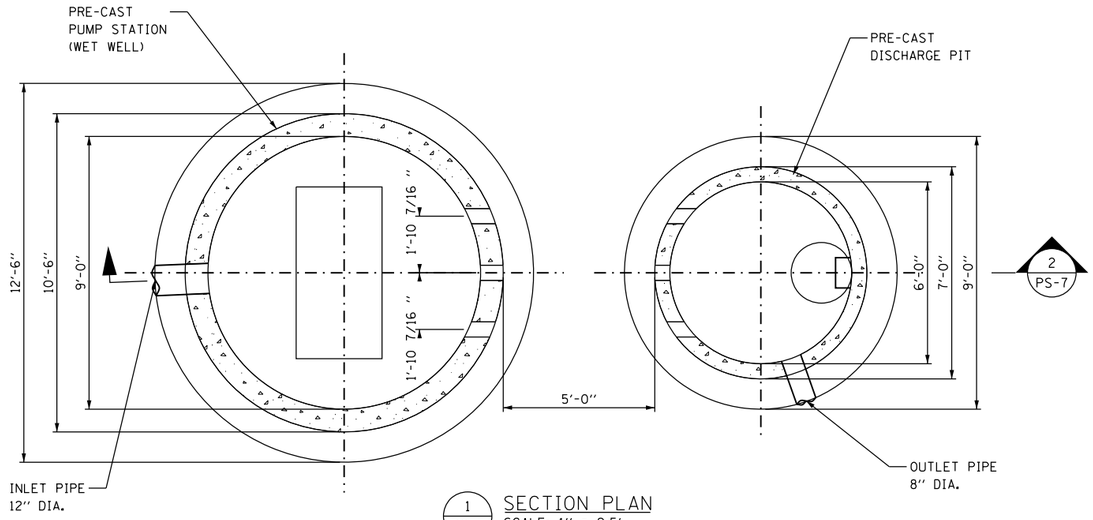


1 / PS-7 SECTION PLAN
SCALE: 1" = 2.5'

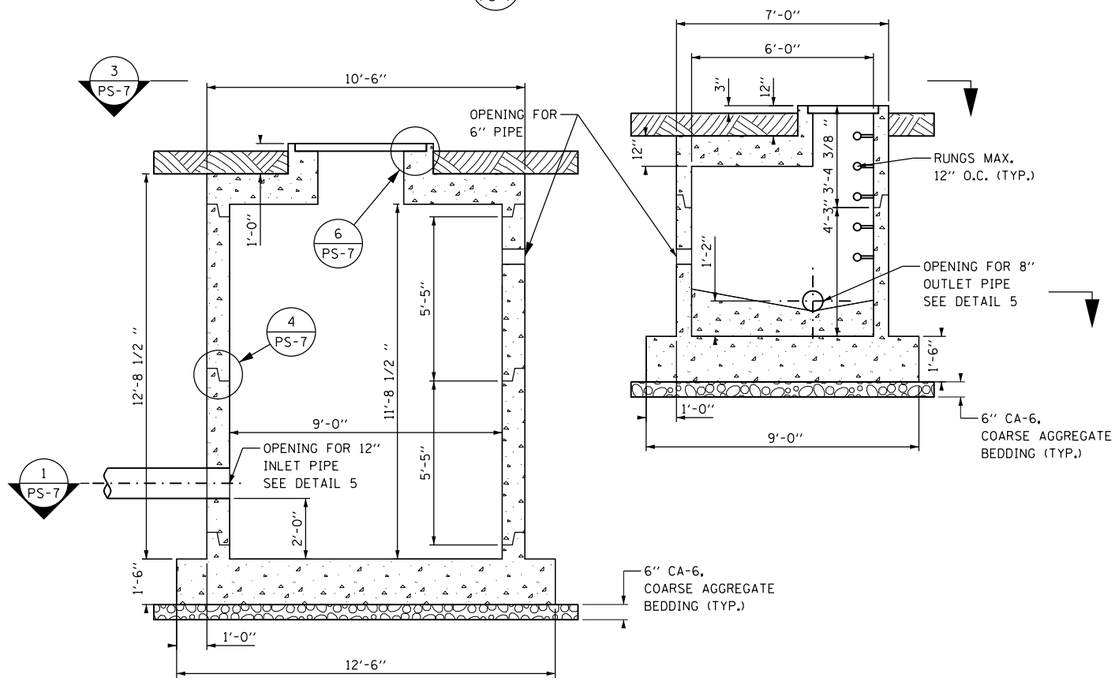


2 / PS-7 SECTION 2
SCALE: 1" = 2.5'

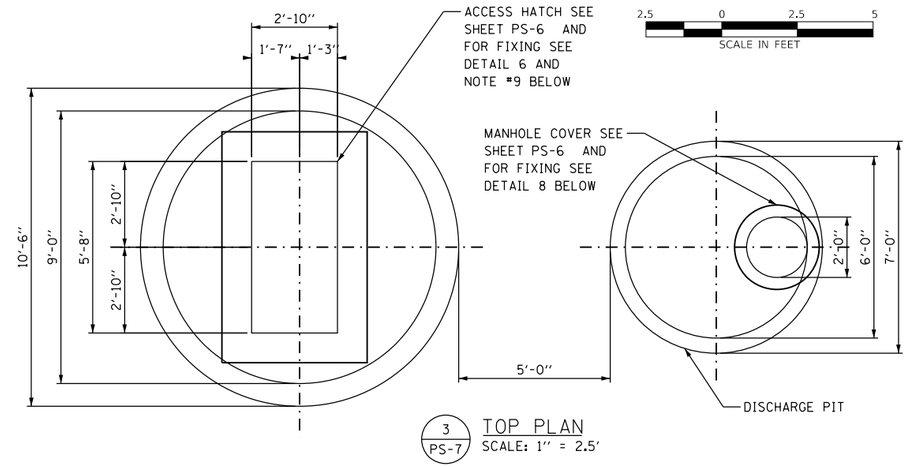


3 / PS-7 TOP PLAN
SCALE: 1" = 2.5'

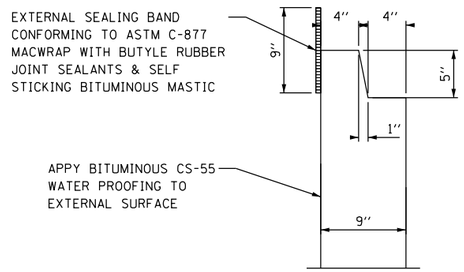


4 / PS-7 DETAIL 4 (TYP.)
N.T.S.

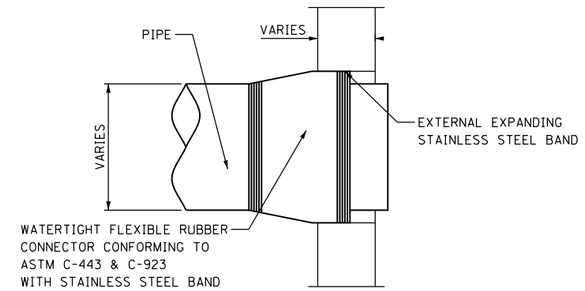


5 / PS-7 DETAIL 5 (TYP.)
N.T.S.

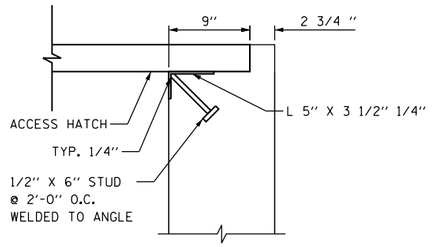


6 / PS-7 DETAIL 6 (TYP.)
N.T.S.

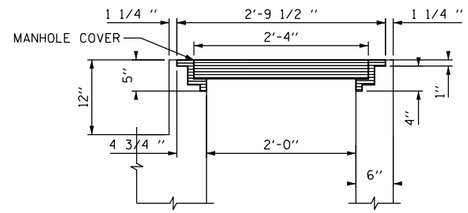


8 / PS-7 DETAIL 8 (TYP.)
MANHOLE COVER
N.T.S.

## NOTES:

1. ALL DIMENSIONS ARE IN FEET UNLESS OTHERWISE STATED.
2. ALL ELEVATIONS ARE IN FEET.
3. FOR GENERAL NOTES SEE SHEET PS-2.
4. FOR REINFORCEMENT DETAILS SEE SHEET PS-22.
5. FOR LOCATION OF PUMP STATION, DISCHARGE PIT, INLET AND OUTLET PIPES SEE PUMP STATION SITE PLAN (PS-4) AND DRAINAGE PLAN SHEETS.
6. FOR EXACT LOCATION AND ELEVATION OF PIPE SLEEVES, SEE CORRESPONDING PUMP STATION MECHANICAL AND STRUCTURAL SHEETS.
7. CONTRACTOR TO PROVIDE TEMPORARY EARTH SUPPORT SHEET PILING, DEWATERING, ETC. FOR CONSTRUCTION OF PUMP STATION AND DISCHARGE PIT.
8. FOR PROVISION OF HOLES IN CONCRETE FOR ELECTRICAL CONDUITS AND OTHER ELECTRICAL WORK SEE PS-8.
9. ACCESS HATCH 34" X 68" TO BE INSTALLED IN THE PRE-CAST ROOF SLAB AT THE TIME OF PRECASTING.
10. FOR EXACT LOCATION OF CONCRETE PAD SEE SHEET PS-4 . FOR CONCRETE PAD DIMENSIONS AND REINFORCEMENT DETAILS SEE SHEET PS-22 .

PLOT DATE: 5/17/2021
PLOT SCALE: 5.0000 ' / in.
FILE NAME: pw:\\CVIL-PW-INT.dvlltech.local:CivilTech Projects\Documents\Projects\3153\tCADSheets\DGU\Pump Station\sht-ps-009.dgn

| DESIGN: MSA | | | | |
|---|---|---|---|---|
| DRAWN: MSA | | | | |
| CHECKED: TKL | | | | |
| APPROVED: | NO. | BY | DATE | DESCRIPTION |
| DATE: 01/22/2021 | REVISIONS | | | |

CDOT CHICAGO DEPARTMENT OF TRANSPORTATION

C*NECT

**PUMP STATION STRUCTURAL SECTIONS 59TH ST.**

**JACKSON PARK MOBILITY IMPROVEMENTS**

STA. TO STA.

| CONTRACT NO. | - | TOTAL SHEETS | SHEET NO. |
|---|---|---|---|
| PROJECT NO. | B-7-203 | 1434 | 550 |
| SCALE: | | DRAWING NO. | PS-7 |

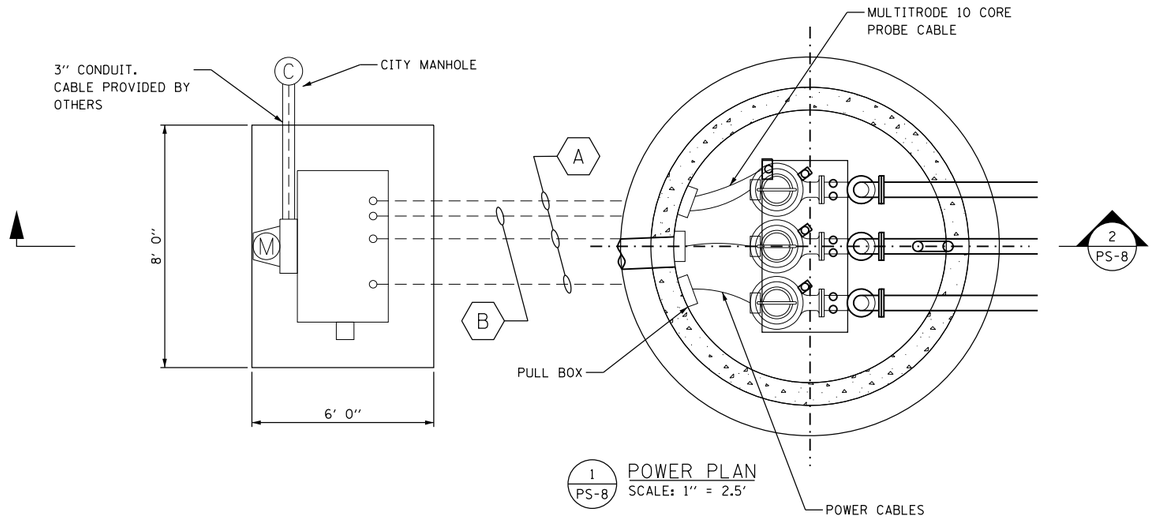


1 PS-8 POWER PLAN
SCALE: 1" = 2.5'

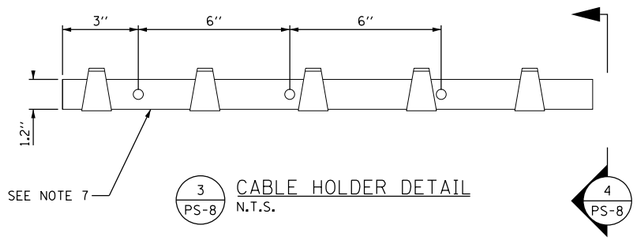


3 PS-8 CABLE HOLDER DETAIL
N.T.S.

4 PS-8

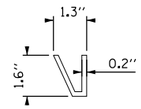


4 PS-8 SIDE VIEW
N.T.S.

NOTE:

STAINLESS STEEL CABLE HOLDER
PROVIDED BY MECHANICAL CONTRACTOR

CABLE HOLDER DETAIL SUPPORTED FROM
ROOF IS SUGGESTIVE ONLY. CONTRACTOR
MUST FOLLOW MANUFACTURER STANDARD
DETAIL AND SPECIFICATION.

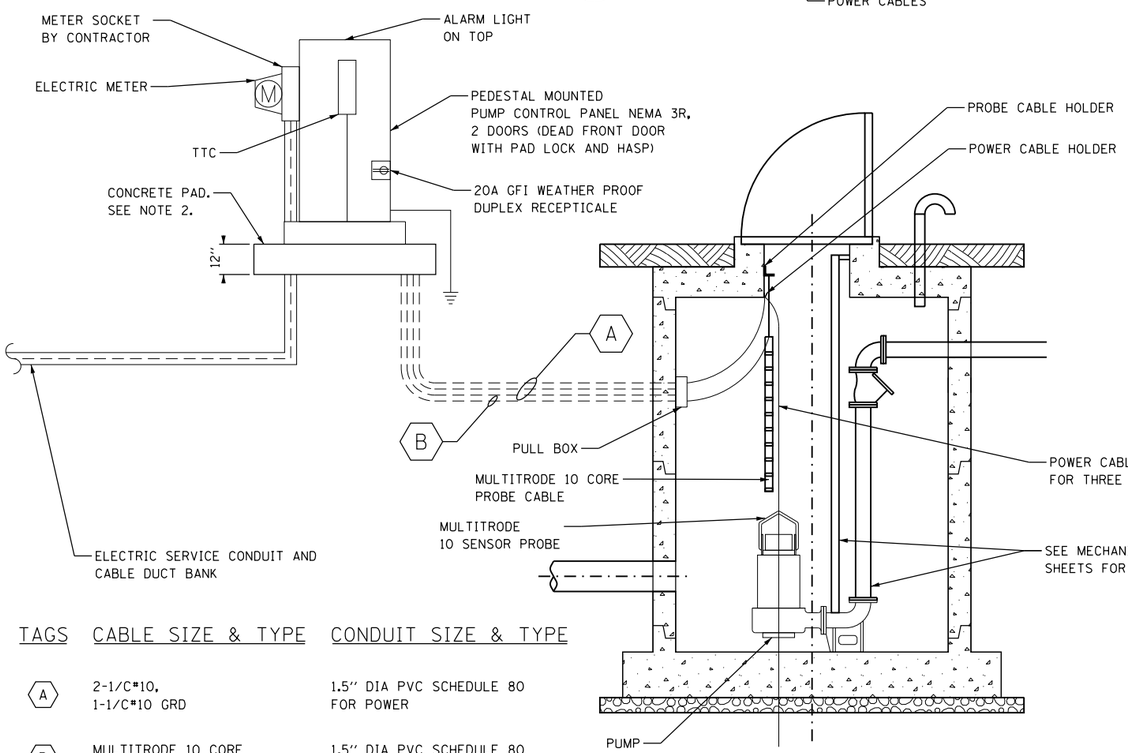


| TAGS | CABLE SIZE & TYPE | CONDUIT SIZE & TYPE |
|---|---|---|
| A | 2-1/C#10,<br>1-1/C#10 GRD | 1.5" DIA PVC SCHEDULE 80<br>FOR POWER |
| B | MULTITRODE 10 CORE<br>PROBE CABLE | 1.5" DIA PVC SCHEDULE 80<br>FOR CONTROL. CABLE PROVIDED<br>BY MECHANICAL CONTRACTOR. |

NOTES:

1. FOR CABLE AND CONDUIT DETAIL
   SEE SHEET PS-9 .
2. FOR CONCRETE PAD DETAIL
   SEE SHEET PS-22. FOR EXACT LOCATION OF
   CONCRETE PAD SEE SHEET PS-4.

2 PS-8 SECTION 2
SCALE: 1" = 2.5'

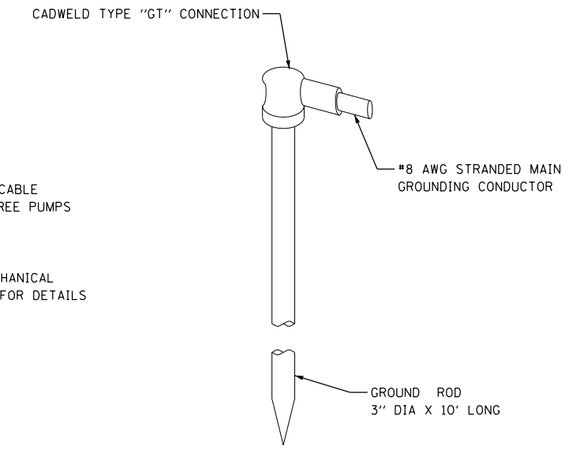


5 PS-8 CONDUCTOR TO GROUND
ROD CONNECTION
N.T.S.

GROUNDING NOTES:

1. THE FOLLOWING NOTES, GROUNDING METHODS AND DETAILS ARE GENERAL IN NATURE. THE CONTACTOR MUST PROVIDE ALL MATERIALS REQUIRED TO INSTALL A COMPLETE GROUNDING SYSTEM TO SUIT THE PROJECT AND THE CONFORM WITH THE MOST CURRENT LOCAL AND NATIONAL ELECTRICAL CODES AND STANDARDS.
2. GROUND RODS MUST BE COPPERWELD 3" DIA. BY 10' LONG.
3. THE MAIN GROUNDING CONDUCTOR MUST BE #2/0 STANDED BARE COPPER WIRE.
4. ALL BENDS IN GROUNDING CONDUCTORS MUST HAVE 12" MIN. RADIUS.
5. GROUNDING CONNECTIONS MUST BE MADE AS FOLLOWS TO FORM A CONTINUOUS GROUNDING SYSTEM.
   a. CADWELD OR THERMOWELD ALL CABLE TO CABLE.
   b. CABLE TO GROUND ROD AS SHOWN ON DETAILS.
6. ENCLOSED IN PIPE ALL EXPOSED GROUNDING CONDUCTORS TO PROTECT AGAINST PHYSICAL DAMAGE.
7. WHEREVER CONDUIT IS USED TO PROTECT GROUND CABLE BOND THE CABLE TO CONDUIT AT BOTH ENDS TO PROVIDE GROUND CONTINUITY.
8. GROUND RODS MUST NOT BE DRIVEN AT AN ANGLE OF MORE THAN 30° TO THE VERTICAL.
9. GROUNDING ELECTRODES MUST NOT BE PLACED IN ROCK, GRAVEL OR ROCKY TYPE SOIL.
10. CHEMICAL TREATMENT OF SOIL TO LOWER GROUND RESISTANCE IS NOT AN ACCEPTABLE METHOD TO LOWER THE GROUNDING IMPEDANCE.
11. GROUNDING SYSTEM MUST BE TESTED USING THE 3-ELECTRODE AC "FALL OF POTENTIAL" METHOD. MAXIMUM GROUND IMPEDANCE MUST BE 5 OHMS. TESTED AND ACCEPTED BY THE CONTRACTOR BEFORE IT IS RENDERED INACCESSABLE BY BACK FILLING, PAVING, CONCRETE SLABS, ETC. TEST RESULTS MUST BE SUBMITTED TO ENGINEER FOR APPROVAL.
12. IF THE PANEL BOARD IS PROVIDED WITH AN EQUIPMENT GROUND BUS, THE GROUND CONDUCTOR MUST BE CONNECTED DIRECTLY TO THE GROUND BUS AND A BONDING JUMPER (SIZE PER NEC TABLE 250-95) PROVIDED TO THE PANEL BOARD ENCLOSURE.
13. PROVIDE A BONDING JUMPER (SIZED PER NEC 250-95) WHEN THE EQUIPMENT GROUNDING CONDUCTOR IS INSTALLED AS A SEPARATE CONDUCTOR TO EITHER THE PANEL BOARD ENCLOSURE OR A PANEL BOARD EQUIPMENT GROUND BUS.
14. GROUNDING ELECTRODE CONDUCTORS MUST BE INSTALLED IN ONE CONTINUOUS LENGTH, WITHOUT SPLICES OR JOINTS.

PLOT DATE: 5/17/2021
PLOT SCALE: 3.0000 ' / in.
FILE NAME: pw:\\CVIL-PW-INT.civiltech.local\Civiltech Projects\Documents\Projects\315 3\CADSheets\D&J\Pump Stations\ps-pc-015.dgn

| | | | | |
|---|---|---|---|---|
| DESIGN: MSA | | | | |
| DRAWN: MSA | | | | |
| CHECKED: TKL | | | | |
| APPROVED: | NO. | BY | DATE | DESCRIPTION |
| DATE: 01/22/2021 | REVISIONS | | | |

CDOT CHICAGO DEPARTMENT OF TRANSPORTATION

C*NECT

PUMP STATION
ELECTRICAL SECTIONS
59TH ST.

JACKSON PARK MOBILITY IMPROVEMENTS

STA. TO STA.

| CONTRACT NO. | TOTAL SHEETS | SHEET NO. |
|---|---|---|
| - | 1434 | 551 |
| PROJECT NO. B-7-203 | DRAWING NO. PS-8 | |
| SCALE: | | |

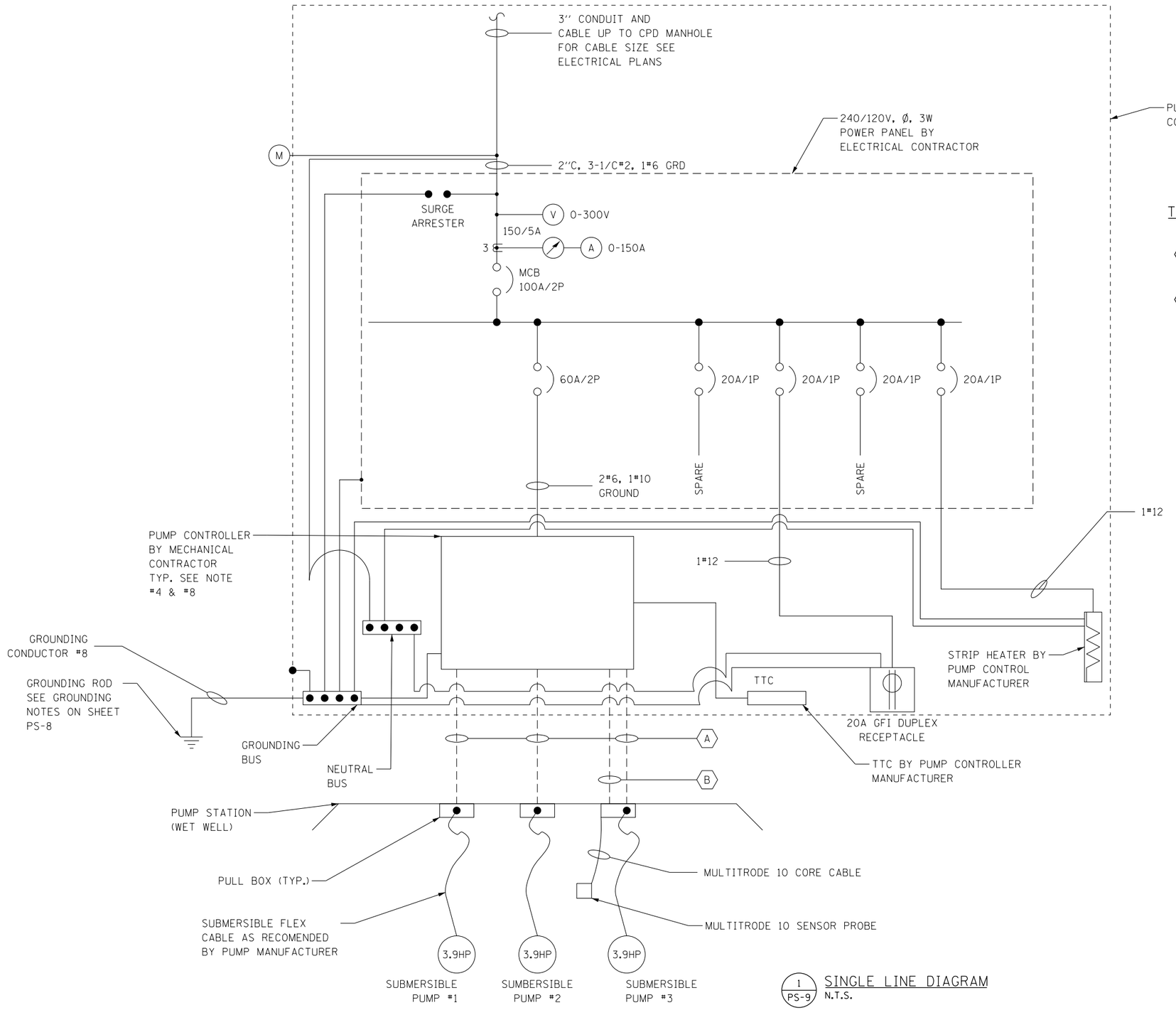


1 PS-9 SINGLE LINE DIAGRAM
N.T.S.

| TAGS | CABLE SIZE & TYPE | CONDUIT SIZE & TYPE |
|---|---|---|
| A | 2-1/C#10,<br>1-1/C#10 GRD | 1.5'' DIA PVC SCHEDULE 80<br>FOR POWER |
| B | MULTITRODE 10 CORE<br>PROBE CABLE | 1.5'' DIA PVC SCHEDULE 80<br>FOR CONTROL. CABLE PROVIDED<br>BY MECHANICAL CONTRACTOR,<br>INSTALLED BY ELECTRICAL<br>CONTRACTOR. |

## NOTES

1. FOR NOTES, SYMBOLS AND LEGEND SEE SHEET PS-3 .
2. ALL CONTROL WIRES MUST BE #14 AWG, OTHER CONDUCTORS MUST BE AS SPECIFIED.
3. THE CONTRACTOR MUST FURNISH ALL THE ELECTRICAL EQUIPMENT AS SPECIFIED AND INSTALL AS PER DRAWINGS AND THE MANUFACTURER'S RECOMMENDATIONS.
4. MECHANICAL CONTRACTOR MUST FURNISH PUMP STATION CONTROL PANEL, MOTOR STARTERS, CONTROL AND INTERNAL WIRING REQUIRED FOR THE PUMP OPERATION AS PER CPD STANDARDS.
5. ELECTRICAL CONTRACTOR TO PROVIDE 1.5'' PVC CONDUIT SCHEDULE 80 FROM CONTROL PANEL ENCLOSURE TO PULL BOX IN THE PUMPING STATION.
6. THE CONTRACTOR MUST PROVIDE 120/208V POWER PANELS AND INSTALL THE TRANSCLOSURE AFTER THE DIFFERENT COMPONENTS SHOWN INSIDE ARE INTEGRATED BY MECHANICAL CONTRACTOR FOR A FUNCTIONALLY OPERATING SYSTEM.
7. CONNECT THE SURGE ARRESTER GROUND TO THE PUMP STATION CONTROL PANEL BUS AS SHOWN.
8. MOTOR STARTERS MUST BE NEMA SIZE '2' FULL VOLTAGE NON-REVERSING TYPE PROVIDED BY MECHANICAL CONTRACTOR AS PART OF THE PUMP CONTROLLER. FOR SCHEMATIC DIAGRAM SEE SHEET PS-23 .

PLOT DATE: 5/17/2021
PLOT SCALE: 40.0000 ' / in.
FILE NAME: pw:\\CIVIL-PW-INT.civiltech.local\Civiltech Projects\Documents\Projects\3153\CADD\Sheets\D&U\Pump Stations\ps-ps-016.dgn

| | | | | | |
|---|---|---|---|---|---|
| DESIGN: MSA | | | | | |
| DRAWN: MSA | | | | | |
| CHECKED: TKL | | | | | |
| APPROVED: | NO. | BY | DATE | DESCRIPTION | |
| DATE: 01/22/2021 | REVISIONS | | | | |

CDOT CHICAGO DEPARTMENT OF TRANSPORTATION

C*NECT

**PUMP STATION**
**SINGLE LINE DIAGRAM**
**59TH ST.**

**JACKSON PARK MOBILITY IMPROVEMENTS**

STA. TO STA.

| | |
|---|---|
| CONTRACT NO. - | TOTAL SHEETS 1434 |
| PROJECT NO. B-7-203 | SHEET NO. 552 |
| SCALE: | DRAWING NO. PS-9 |

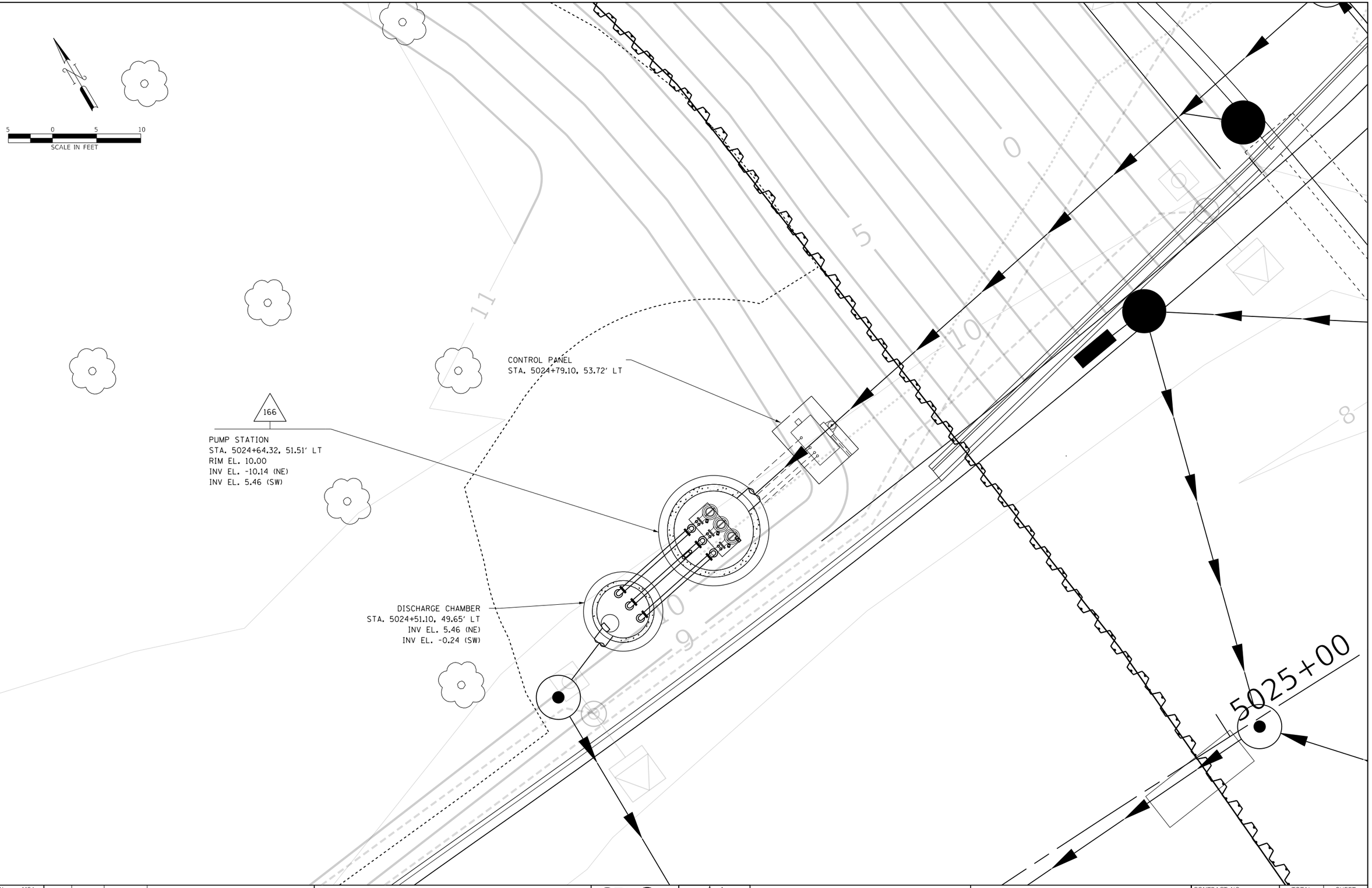


PLOT DATE: 5/17/2021
PLOT SCALE: 10.0000 ' / in.
FILE NAME: pw:\\CIVIL-PW-INT.civiltech.local:CivilTech Projects\Documents\Projects\3153\tCADSheets\DGU\Pump Stations\ith-ps-017.dgn

| | | | | |
|---|---|---|---|---|
| DESIGN: MSA | | | | |
| DRAWN: MSA | | | | |
| CHECKED: TKL | | | | |
| APPROVED: | NO. | BY | DATE | DESCRIPTION |
| DATE: 01/22/2021 | REVISIONS | | | |

CDOT CHICAGO DEPARTMENT OF TRANSPORTATION

C*NECT

PUMP STATION
PUMP STATION SITE PLAN
HAYES/LSD

JACKSON PARK MOBILITY IMPROVEMENTS

STA. TO STA.

| | |
|---|---|
| CONTRACT NO. - | TOTAL SHEETS 1434 |
| PROJECT NO. B-7-203 | SHEET NO. 553 |
| SCALE: | DRAWING NO. PS-10 |

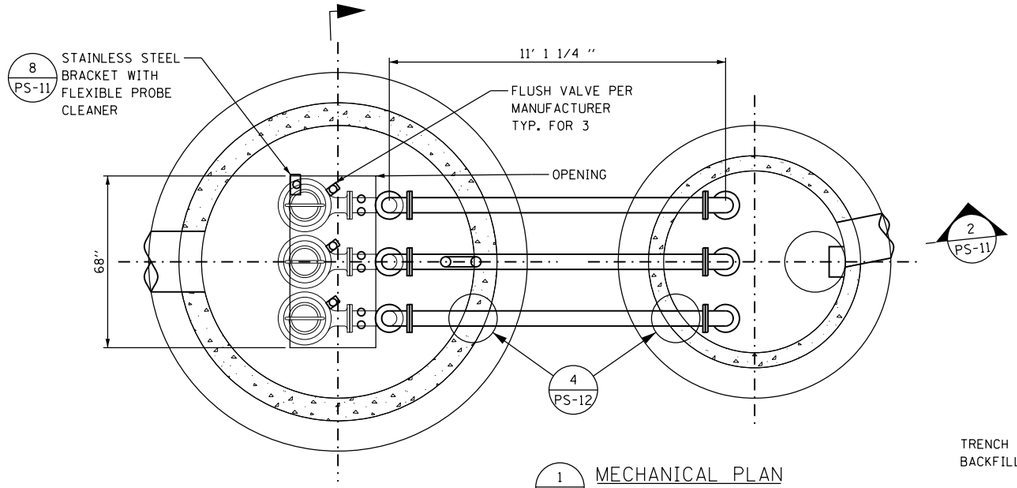


1 PS-11 MECHANICAL PLAN
SCALE: 1" = 2.5'

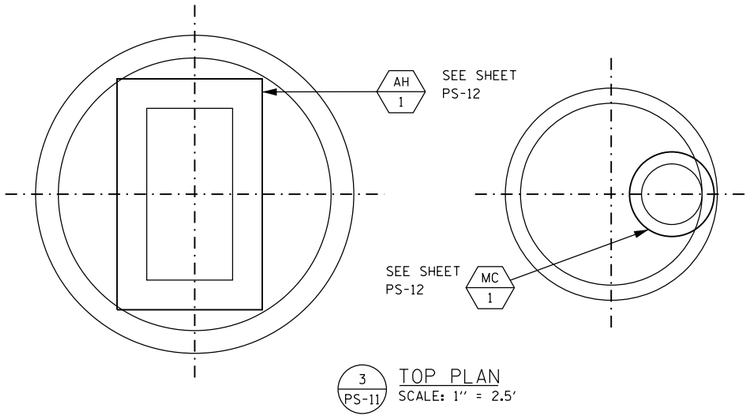


3 PS-11 TOP PLAN
SCALE: 1" = 2.5'

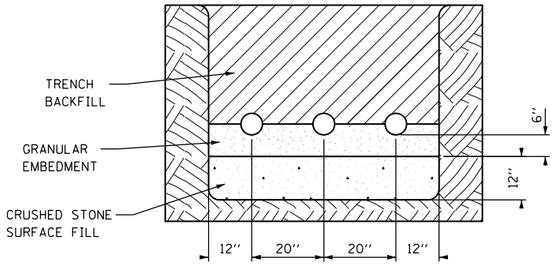


9 PS-11 SECTION 9
GRANULAR EMBEDMENT FOR PIPES
N.T.S.

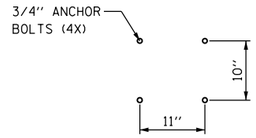


6 PS-11 DETAIL 6
ANCHOR BOLT DIMENSIONS
N.T.S.

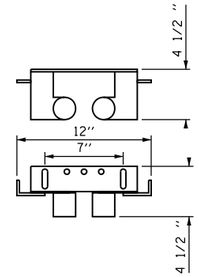


5 PS-11 DETAIL 5
DUAL RAIL UPPER GUIDE BAR BRACKET
N.T.S.

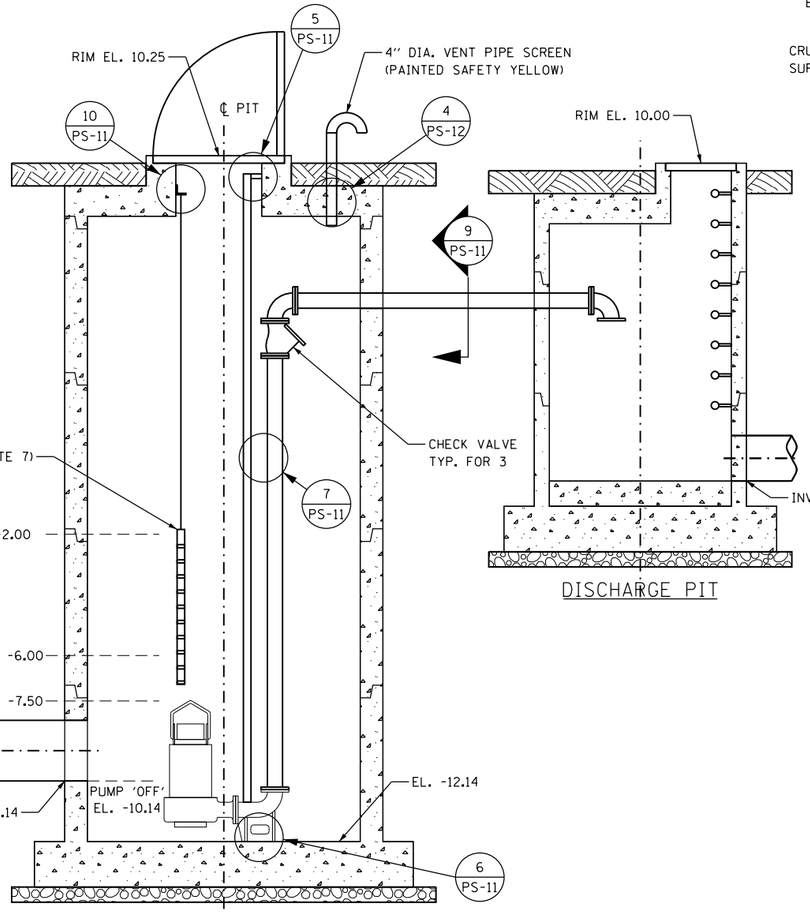


DISCHARGE PIT

PUMP STATION (WET WELL)

2 PS-11 SECTION 2
SCALE: 1" = 2.5'

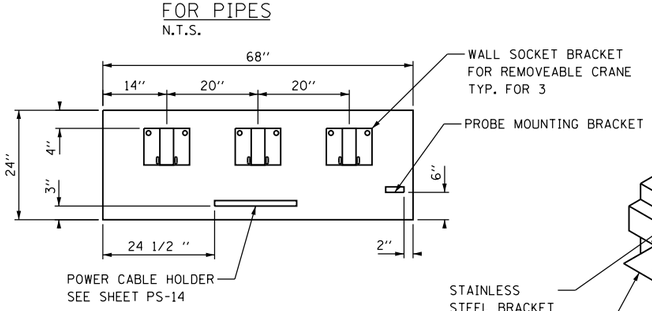


10 PS-11 DETAIL 10
BRACKETS MOUNTING
N.T.S.

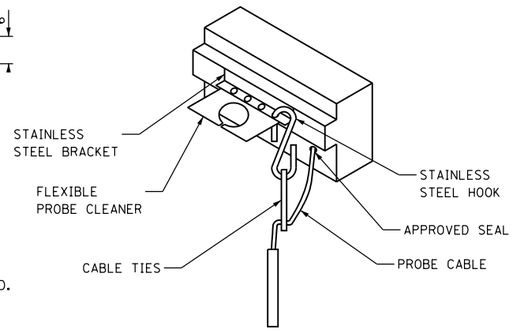


8 PS-11 DETAIL 8
PROBE MOUNTING
N.T.S.

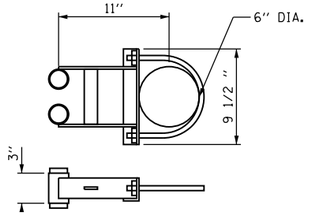


NOTE: DUAL RAIL INTERMEDIATE GUIDE BAR BRACKET (USED FOR) GUIDE BARS OVER 20' LONG SPACED EVERY 10'.

7 PS-11 DETAIL 7
DUAL RAIL INTEMEDIATE GUIDE BAR BRACKET
N.T.S.

## NOTES:

1. ALL DIMENSIONS ARE IN INCHES UNLESS OTHERWISE STATED.
2. ALL ELEVATIONS ARE IN FEET.
3. FOR LEGEND, ABBREVIATION AND GENERAL NOTES SEE SHEET PS-1 .
4. FOR SCHEMATIC, SEQUENCE OF OPERATION AND SCHEDULES AND MECHANICAL NOTES SEE SHEET PS-12 .
5. DETAILS SHOWN ARE FOR GENERAL REFERENCE ONLY. FOR ACTUAL DETAILS REFER TO APPROVED VENDORS INSTALLATION INSTRUCTIONS.
6. FOR EXACT LOCATION OF PUMP STATION & DISCHARGE PIT SEE DRAINAGE PLAN SHEETS AND PUMP STATION SITE PLAN.
7. ADJUST THE LEVELS IN FIELD TO CLOSEST SENSOR NUMBER ON SELECTED PROBE.
8. SEE DETAIL 4 ON SHEET PS-12 .

PLOT DATE: 5/17/2021
PLOT SCALE: 5.0000 ' / in.
FILE NAME: pw:\\CIVIL-PW-NT.dvlltech.local:CivilTech Projects\Documents\Projects\3153\tCADSheets\DGU\Pump Station\ath-ps-004.dgn

| | | | | | |
|---|---|---|---|---|---|
| DESIGN: MSA | | | | | |
| DRAWN: MSA | | | | | |
| CHECKED: TKL | | | | | |
| APPROVED: | NO. | BY | DATE | DESCRIPTION | |
| DATE: 01/22/2021 | REVISIONS | | | | |

CDOT CHICAGO DEPARTMENT OF TRANSPORTATION

C*NECT

PUMP STATION
MECHANICAL SECTIONS
HAYES/LSD

JACKSON PARK MOBILITY IMPROVEMENTS

STA. TO STA.

| | | |
|---|---|---|
| CONTRACT NO. - | TOTAL SHEETS 1434 | SHEET NO. 554 |
| PROJECT NO. B-7-203 | DRAWING NO. PS-11 | |
| SCALE: | | |

## PUMP SCHEDULE

| TAG | SERVICE | TYPE | CFS | HEAD FT | RPM | DISC SIZE | MOTOR DATA HP | VOLT | PH | HZ | REMARKS |
|---|---|---|---|---|---|---|---|---|---|---|---|
| P 1 | STORM WATER | SUBMERSIBLE | 1.14 | 14.85 | 1745 | 6" | 5 | 460 | 3 | 60 | • |
| P 2 | STORM WATER | SUBMERSIBLE | 1.14 | 14.85 | 1745 | 6" | 5 | 460 | 3 | 60 | • |
| P 3 | STORM WATER | SUBMERSIBLE | 1.14 | 14.85 | 1745 | 6" | 5 | 460 | 3 | 60 | • |

• PROVIDE DUAL RAIL SYSTEM WITH DUAL RAIL GUIDE SUPPORT BRACKETS, SUPPORT FOR BASE ELBOW OF PUMPS AND FLUSH VALVE SYSTEM AND ALSO PROVIDE TRIPLEX PUMP CONTROLLER WITH MULTITRODE LIQUID LEVEL CONTROL.

## VENTILATION SCHEDULE

| ROOM NAME | ROOM PURPOSE | ROOM SQF | NATURAL LIGHT & VENTILATION CODE GL. AREA SQF | CODE VENT. AREA SQF | ACTUAL GL. AREA SQF | ACTUAL VENT. AREA SQF | MECHANICAL VENTILATION CODE AIR-SUP LPS | CODE AIR-EXH LPS | ACTUAL AIR-SUP LPS | ACTUAL AIR-EXH LHS | REMARKS |
|---|---|---|---|---|---|---|---|---|---|---|---|
| PUMP STATION (WET WELL) | PUMP LIQUID | 440.46 | 0 | 0 | 0 | 0.32 | 0 | 0 | 0 | 0 | VENTILATION THRU. 4" PIPE |
| DISCHARGE PIT | DISCHARGE | 71.04 | 0 | 0 | 0 | 3.66 | 0 | 0 | 0 | 0 | GRATED COVER |

## ACCESS HATCH / MANHOLE COVER SIZES & TYPES

| TAG | LOCATION | CLEAR OPENING SIZE W x L | OUTSIDE MANHOLE COVER SIZE (EA) W x L | NO. OF COVERS | TYPE OF COVER | MATERIAL | STYLE | REMARKS |
|---|---|---|---|---|---|---|---|---|
| AH 1 | PUMP STATION (WET WELL) | 68" x 34" | 78.5" x 52.5" | 3 | SOLID | HEAVY DUTY ALUMINUM | CHANNEL H20 | SEE MANHOLE COVER NOTES BELOW |
| MC 1 | DISCHARGE PIT | 24" DIA. | 33.5" DIA. | 1 | GRATED | GRAY IRON | - | SEE MANHOLE COVER NOTES BELOW |

## ACCESS HATCH / MANHOLE COVER NOTES

1. MANHOLE COVERS MUST BE BOLTED TO FRAMES WITH STAINLESS STEEL CAP SCREWS.
2. SOLID COVERS MUST BE PROVIDED WITH RING HANDLES.
3. OPENING SIZES & COVER SIZES ARE IN INCHES.
4. VERIFY IN FIELD MANHOLE COVER SIZES AS PER THE MODEL SELECTED, MATCHING THE CORRESPONDING CLEAR OPENINGS.
5. FOR SPECIFICATIONS SEE STRUCTURAL WORK SECTION.

## MECHANICAL NOTES:

1. INSTALL PUMPS AS PER LOCATIONS SHOWN ON DRAWINGS WITH ALL ACCESSORIES.
2. PROVIDE AND INSTALL DUAL RAILS ON PUMPS AS SHOWN ON DWG'S. MATERIAL FOR DUAL RAIL MUST BE 304 STAINLESS STEEL.
3. INSTALL DUAL RAIL UPPER SUPPORT GUIDE BAR BRACKET AS SHOWN ON DWG PS-11 .
4. INSTALL DUAL RAIL INTERMEDIATE SUPPORT GUIDE BAR BRACKET AT EVERY 10' AS SHOWN ON DWG PS-11 .
5. INSTALL FLUSH VALVE SYSTEM ON ALL PUMPS, AS PER MANUFACTURER'S INSTRUCTION.
6. INSTALL HIGH WATER WARNING ALARM THROUGH AUTO-DIALER SYSTEM TO EITHER DEPT. OF STREETS AND SANITATION'S RADIO OR 311 AS DECIDED BY CPD. FOR CONTROLLER SCHEMATIC DIAGRAM SEE DWG. PS-23 .
7. INSTALL 4" VENT PIPE.
8. FOR NOTES, LEGEND AND ABBREVIATIONS, REFER DWG PS-1 .
9. ALL DIMENSIONS ARE IN INCHES UNLESS OTHERWISE NOTED.
10. INSTALL PROBE LIQUID CONTROL SYSTEM AS SHOWN ON DWG. PS-11 AS PER MANUFACTURER'S INSTRUCTION.

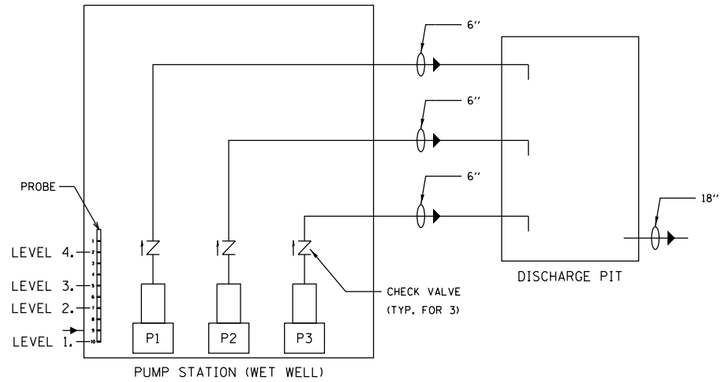


PUMPS SCHEMATIC DIAGRAM
N.T.S.

## SEQUENCE OF OPERATIONS:

1. AT ANY TIME ANY ONE PUMP OR TWO PUMPS WILL BE WORKING DEPENDING UPON THE LEVEL OF WATER. THE THIRD PUMP WILL BE STAND-BY.

   THE CONTROL FUNCTION MUST PROVIDE FOR THE OPERATION OF THE PUMPS UNDER NORMAL CONDITIONS, AND MUST ALTERNATE THE PUMPS ON EACH PUMP DOWN CYCLE TO EQUALIZE THE RUN TIME. IN THE EVENT THE INCOMING FLOW EXCEEDS THE PUMPING CAPACITY OF THE LEAD PUMP, SUBSEQUENT PUMPS MUST AUTOMATICALLY START TO HANDLE THE INCREASED FLOW. AS THE FLOW DECREASES, THE PUMPS MUST CUT OFF AT THE ELEVATIONS AS SHOWN ON THE PLANS.

2. THE FEATURE ON TRIPLEX PUMP CONTROLLER "MAX PUMP OFF TIME" WILL BE USED TO PREVENT WET WELL BECOMING SEPTIC. IF NO PUMP HAS ACTIVATED WITHIN THE SET TIME WHEN WATER IS BELOW LEVEL 2, THE DUTY PUMP WILL RUN. MAXIMUM PUMP OFF TIME CAN BE SET BETWEEN 15 MIN AND 10 HOURS.

   OPERATIONAL SEQUENCE AS FOLLOWS: (SEE DWG. PS-11 )
   LEVEL 1: PUMP WILL STOP
   LEVEL 2: FIRST PUMP WILL START
   LEVEL 3: SECOND PUMPS WILL START AND WILL STOP AT LEVEL 2.
   LEVEL 4: ALARM ON

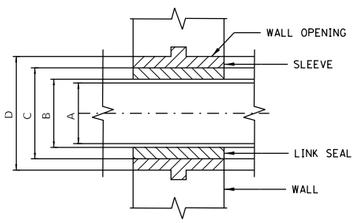


4 / PS-12 DETAIL 4
PIPE PENETRATION
N.T.S.

| NOM. PIPE DIA (IN) | A IN | B IN | C IN | D IN |
|---|---|---|---|---|
| 4 | 4 | 5 | 8 | 9 |
| 6 | 6 | 7 | 10 | 11 |
| 8 | 8 | 9.5 | 12 | 13 |

TABLE FOR DETAIL 4.

PLOT DATE: 5/17/2021
PLOT SCALE: 40.0000 ' / in.
FILE NAME: pw:\\CIVIL-PW-INT.civiltech.local\Civiltech Projects\Documents\Projects\3133\CADD\Sheets\D6\U\Pump Stations\sh-ps-005.dgn

| | | | | |
|---|---|---|---|---|
| DESIGN: MSA | | | | |
| DRAWN: MSA | | | | |
| CHECKED: TKL | | | | |
| APPROVED: | NO. | BY | DATE | DESCRIPTION |
| DATE: 01/22/2021 | REVISIONS | | | |

CDOT CHICAGO DEPARTMENT OF TRANSPORTATION
C*NECT

**PUMP STATION MECHANICAL NOTES HAYES/LSD**

**JACKSON PARK MOBILITY IMPROVEMENTS**

STA. TO STA.

| | |
|---|---|
| CONTRACT NO. - | TOTAL SHEETS 1434 / SHEET NO. 555 |
| PROJECT NO. B-7-203 | DRAWING NO. PS-12 |
| SCALE: | |

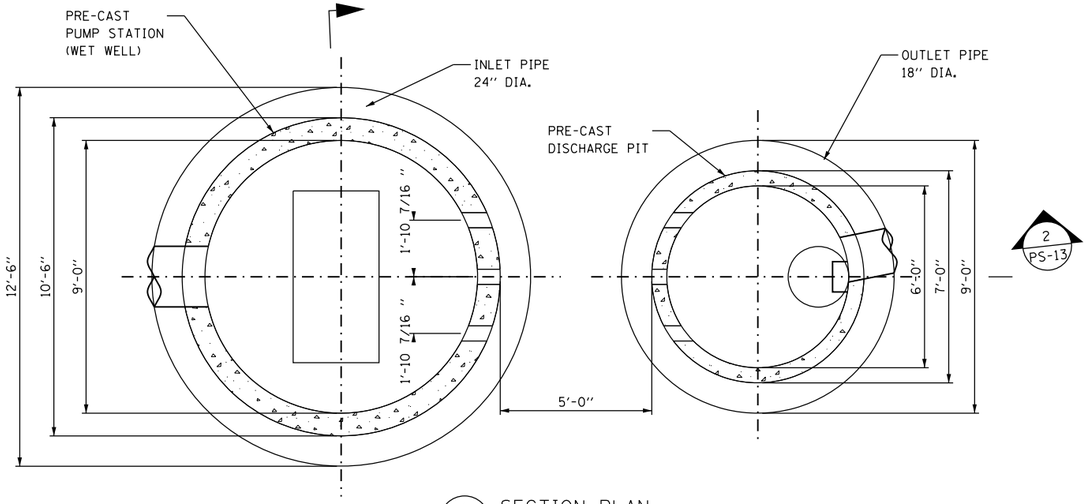


1 PS-13 SECTION PLAN
SCALE: 1'' = 2.5'

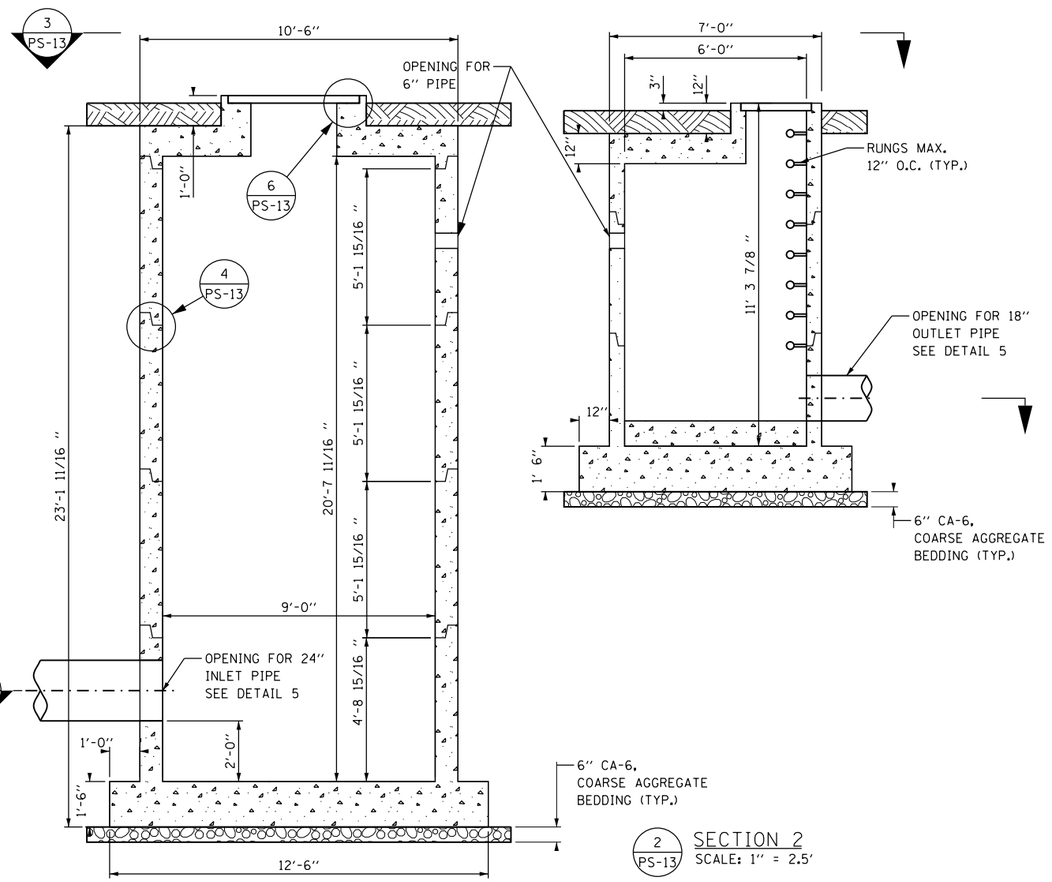


2 PS-13 SECTION 2
SCALE: 1'' = 2.5'

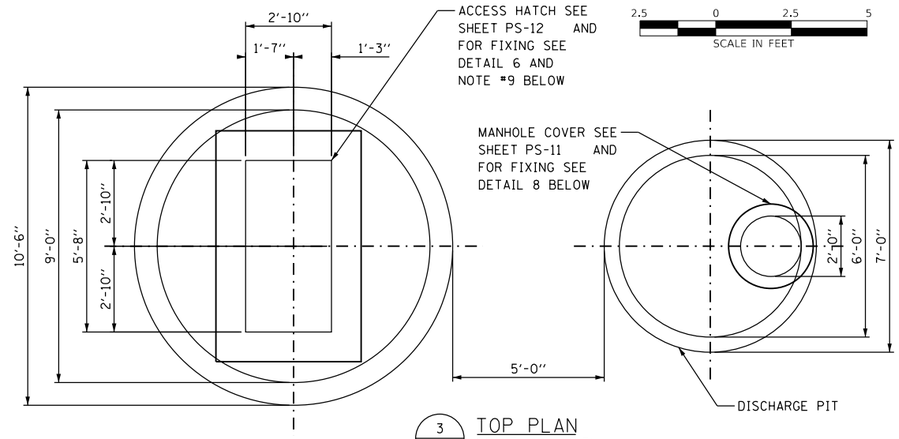


3 PS-13 TOP PLAN
SCALE: 1'' = 2.5'

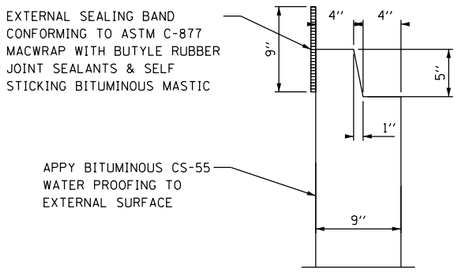


4 PS-13 DETAIL 4 (TYP.)
N.T.S.

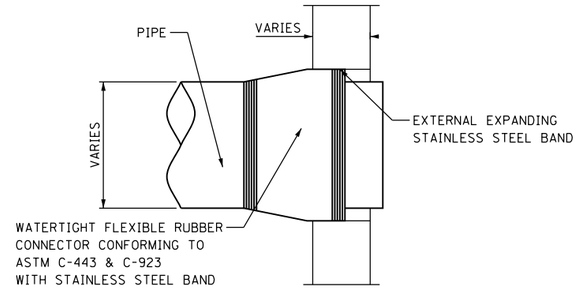


5 PS-13 DETAIL 5 (TYP.)
N.T.S.

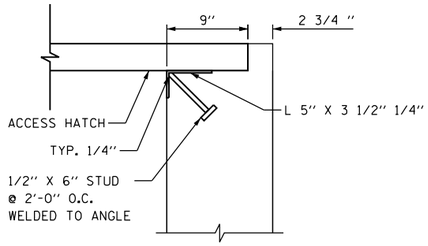


6 PS-13 DETAIL 6 (TYP.)
N.T.S.

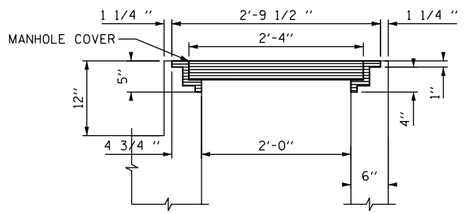


8 PS-13 DETAIL 8 (TYP.)
MANHOLE COVER
N.T.S.

## NOTES:

1. ALL DIMENSIONS ARE IN FEET UNLESS OTHERWISE STATED.
2. ALL ELEVATIONS ARE IN FEET.
3. FOR GENERAL NOTES SEE SHEET PS-2 .
4. FOR REINFORCEMENT DETAILS SEE SHEET PS-22 .
5. FOR LOCATION OF PUMP STATION, DISCHARGE PIT, INLET AND OUTLET PIPES SEE PUMP STATION SITE PLAN (PS-10) AND DRAINAGE PLAN SHEETS.
6. FOR EXACT LOCATION AND ELEVATION OF PIPE SLEEVES, SEE CORRESPONDING PUMP STATION MECHANICAL AND STRUCTURAL SHEETS.
7. CONTRACTOR TO PROVIDE TEMPORARY EARTH SUPPORT SHEET PILING, DEWATERING, ETC. FOR CONSTRUCTION OF PUMP STATION AND DISCHARGE PIT.
8. FOR PROVISION OF HOLES IN CONCRETE FOR ELECTRICAL CONDUITS AND OTHER ELECTRICAL WORK SEE PS-14 .
9. ACCESS HATCH 34'' X 68'' TO BE INSTALLED IN THE PRE-CAST ROOF SLAB AT THE TIME OF PRECASTING.
10. FOR EXACT LOCATION OF CONCRETE PAD SEE SHEET PS-10 . FOR CONCRETE PAD DIMENSIONS AND REINFORCEMENT DETAILS SEE SHEET PS-22 .

PLOT DATE: 5/17/2021
PLOT SCALE: 5.0000 ' / in.
FILE NAME: pw:\CIVIL-PW-JNT.cdwltech.local\CivilTech Projects\Documents\Projects\3133\CAD\Sheets\D&U\Pump Station\ch-ps-010.dgn

| | | | | | |
|---|---|---|---|---|---|
| DESIGN: | MSA | | | | |
| DRAWN: | MSA | | | | |
| CHECKED: | TKL | | | | |
| APPROVED: | | NO. | BY | DATE | DESCRIPTION |
| DATE: 01/22/2021 | | REVISIONS | | | |

CDOT CHICAGO DEPARTMENT OF TRANSPORTATION

C*NECT

**PUMP STATION**
**STRUCTURAL SECTIONS**
**HAYES/LSD**

**JACKSON PARK MOBILITY IMPROVEMENTS**

STA. TO STA.

| | |
|---|---|
| CONTRACT NO. - | TOTAL SHEETS 1434 / SHEET NO. 556 |
| PROJECT NO. B-7-203 | DRAWING NO. PS-13 |
| SCALE: | |

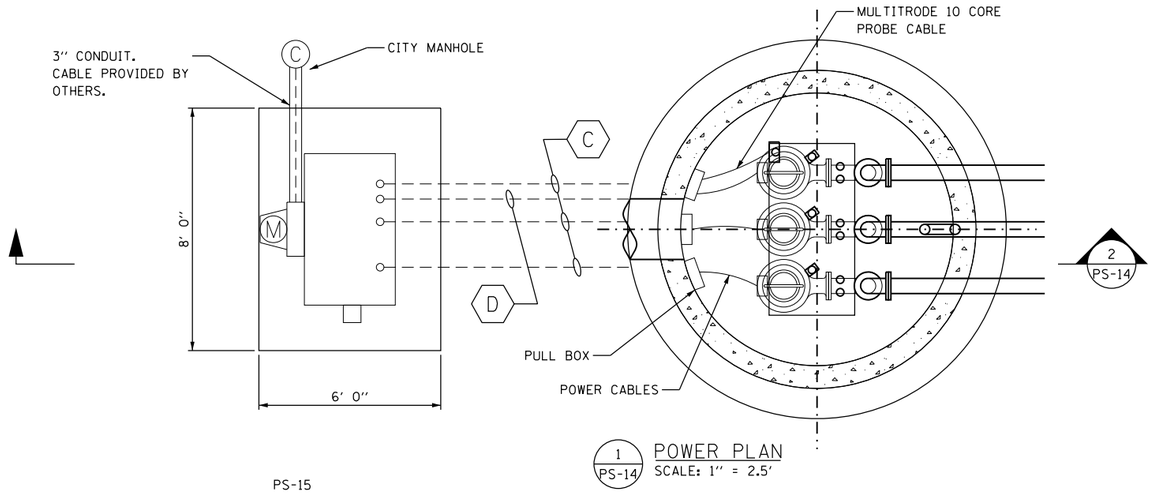


1 PS-14 POWER PLAN
SCALE: 1" = 2.5'

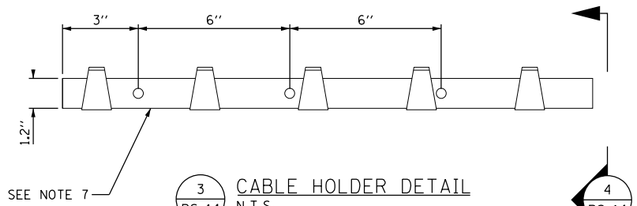


3 PS-14 CABLE HOLDER DETAIL
N.T.S.

4 PS-14

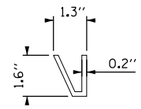


4 PS-14 SIDE VIEW
N.T.S.

NOTE:

STAINLESS STEEL CABLE HOLDER PROVIDED BY MECHANICAL CONTRACTOR

CABLE HOLDER DETAIL SUPPORTED FROM ROOF IS SUGGESTIVE ONLY. CONTRACTOR MUST FOLLOW MANUFACTURER STANDARD DETAIL AND SPECIFICATION.

PS-15

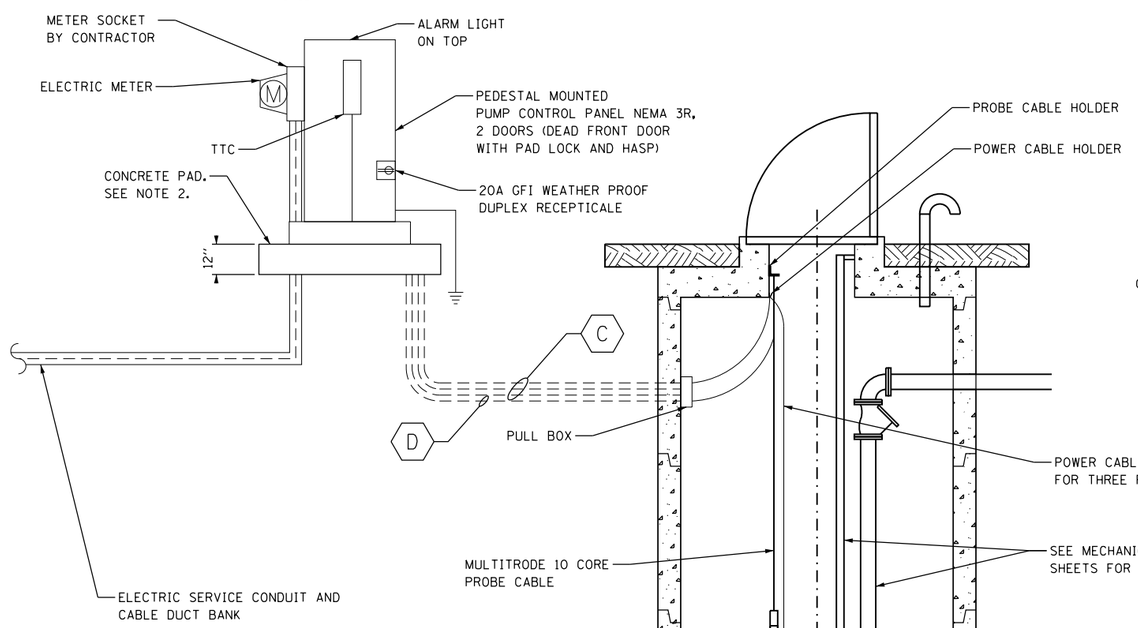





| TAGS | CABLE SIZE & TYPE | CONDUIT SIZE & TYPE |
|---|---|---|
| C | 3-1/C#10, 1-1/C#10 GRD | 1.5" DIA PVC SCHEDULE 80 FOR POWER |
| D | MULTITRODE 10 CORE PROBE CABLE | 1.5" DIA PVC SCHEDULE 80 FOR CONTROL. CABLE PROVIDED BY MECHANICAL CONTRACTOR. |

NOTES:

1. FOR CABLE AND CONDUIT DETAIL SEE SHEET PS-15 .
2. FOR CONCRETE PAD DETAIL SEE SHEET PS-22. FOR EXACT LOCATION OF CONCRETE PAD SEE SHEET PS-10 .

2 PS-14 SECTION 2
SCALE: 1" = 2.5'

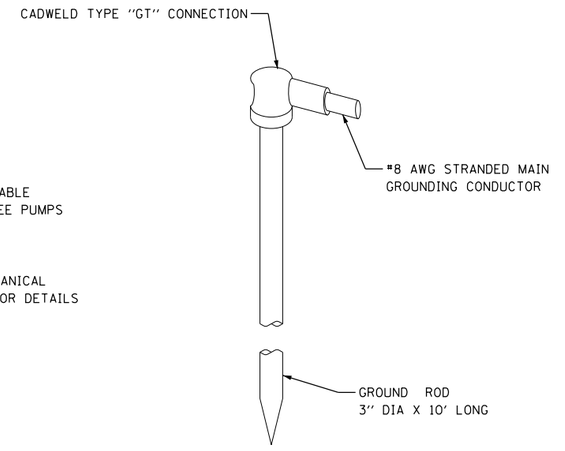


5 PS-8 CONDUCTOR TO GROUND ROD CONNECTION
N.T.S.

GROUNDING NOTES:

1. THE FOLLOWING NOTES, GROUNDING METHODS AND DETAILS ARE GENERAL IN NATURE. THE CONTACTOR MUST PROVIDE ALL MATERIALS REQUIRED TO INSTALL A COMPLETE GROUNDING SYSTEM TO SUIT THE PROJECT AND THE CONFORM WITH THE MOST CURRENT LOCAL AND NATIONAL ELECTRICAL CODES AND STANDARDS.
2. GROUND RODS MUST BE COPPERWELD 3" DIA. BY 10' LONG.
3. THE MAIN GROUNDING CONDUCTOR MUST BE #2/0 STANDED BARE COPPER WIRE.
4. ALL BENDS IN GROUNDING CONDUCTORS MUST HAVE 12" MIN. RADIUS.
5. GROUNDING CONNECTIONS MUST BE MADE AS FOLLOWS TO FORM A CONTINUOUS GROUNDING SYSTEM.
   a. CADWELD OR THERMOWELD ALL CABLE TO CABLE.
   b. CABLE TO GROUND ROD AS SHOWN ON DETAILS.
6. ENCLOSED IN PIPE ALL EXPOSED GROUNDING CONDUCTORS TO PROTECT AGAINST PHYSICAL DAMAGE.
7. WHEREVER CONDUIT IS USED TO PROTECT GROUND CABLE BOND THE CABLE TO CONDUIT AT BOTH ENDS TO PROVIDE GROUND CONTINUITY.
8. GROUND RODS MUST NOT BE DRIVEN AT AN ANGLE OF MORE THAN 30° TO THE VERTICAL.
9. GROUNDING ELECTRODES MUST NOT BE PLACED IN ROCK, GRAVEL OR ROCKY TYPE SOIL.
10. CHEMICAL TREATMENT OF SOIL TO LOWER GROUND RESISTANCE IS NOT AN ACCEPTABLE METHOD TO LOWER THE GROUNDING IMPEDANCE.
11. GROUNDING SYSTEM MUST BE TESTED USING THE 3-ELECTRODE AC "FALL OF POTENTIAL" METHOD. MAXIMUM GROUND IMPEDANCE MUST BE 5 OHMS. TESTED AND ACCEPTED BY THE CONTRACTOR BEFORE IT IS RENDERED INACCESSABLE BY BACK FILLING, PAVING, CONCRETE SLABS, ETC. TEST RESULTS MUST BE SUBMITTED TO ENGINEER FOR APPROVAL.
12. IF THE PANEL BOARD IS PROVIDED WITH AN EQUIPMENT GROUND BUS, THE GROUND CONDUCTOR MUST BE CONNECTED DIRECTLY TO THE GROUND BUS AND A BONDING JUMPER (SIZE PER NEC TABLE 250-95) PROVIDED TO THE PANEL BOARD ENCLOSURE.
13. PROVIDE A BONDING JUMPER (SIZED PER NEC 250-95) WHEN THE EQUIPMENT GROUNDING CONDUCTOR IS INSTALLED AS A SEPARATE CONDUCTOR TO EITHER THE PANEL BOARD ENCLOSURE OR A PANEL BOARD EQUIPMENT GROUND BUS.
14. GROUNDING ELECTRODE CONDUCTORS MUST BE INSTALLED IN ONE CONTINUOUS LENGTH, WITHOUT SPLICES OR JOINTS.

PLOT DATE: 5/17/2021
PLOT SCALE: 3.0000 ' / in.
FILE NAME: pw:\\CIVIL-PW-INT-civiltech.local\Civiltech Projects\Documents\Projects\3153\CADDSheets\D&U\Pump Stations\ps-pe-018.dgn

| DESIGN: MSA | | | | |
|---|---|---|---|---|
| DRAWN: MSA | | | | |
| CHECKED: TKL | | | | |
| APPROVED: | NO. | BY | DATE | DESCRIPTION |
| DATE: 01/22/2021 | REVISIONS | | | |

CHICAGO DEPARTMENT OF TRANSPORTATION

C*NECT

PUMP STATION
ELECTRICAL SECTIONS
HAYES/LSD

JACKSON PARK MOBILITY IMPROVEMENTS

STA. TO STA.

| CONTRACT NO. | TOTAL SHEETS | SHEET NO. |
|---|---|---|
| - | 1434 | 557 |
| PROJECT NO. B-7-203 | DRAWING NO. PS-14 | |
| SCALE: | | |

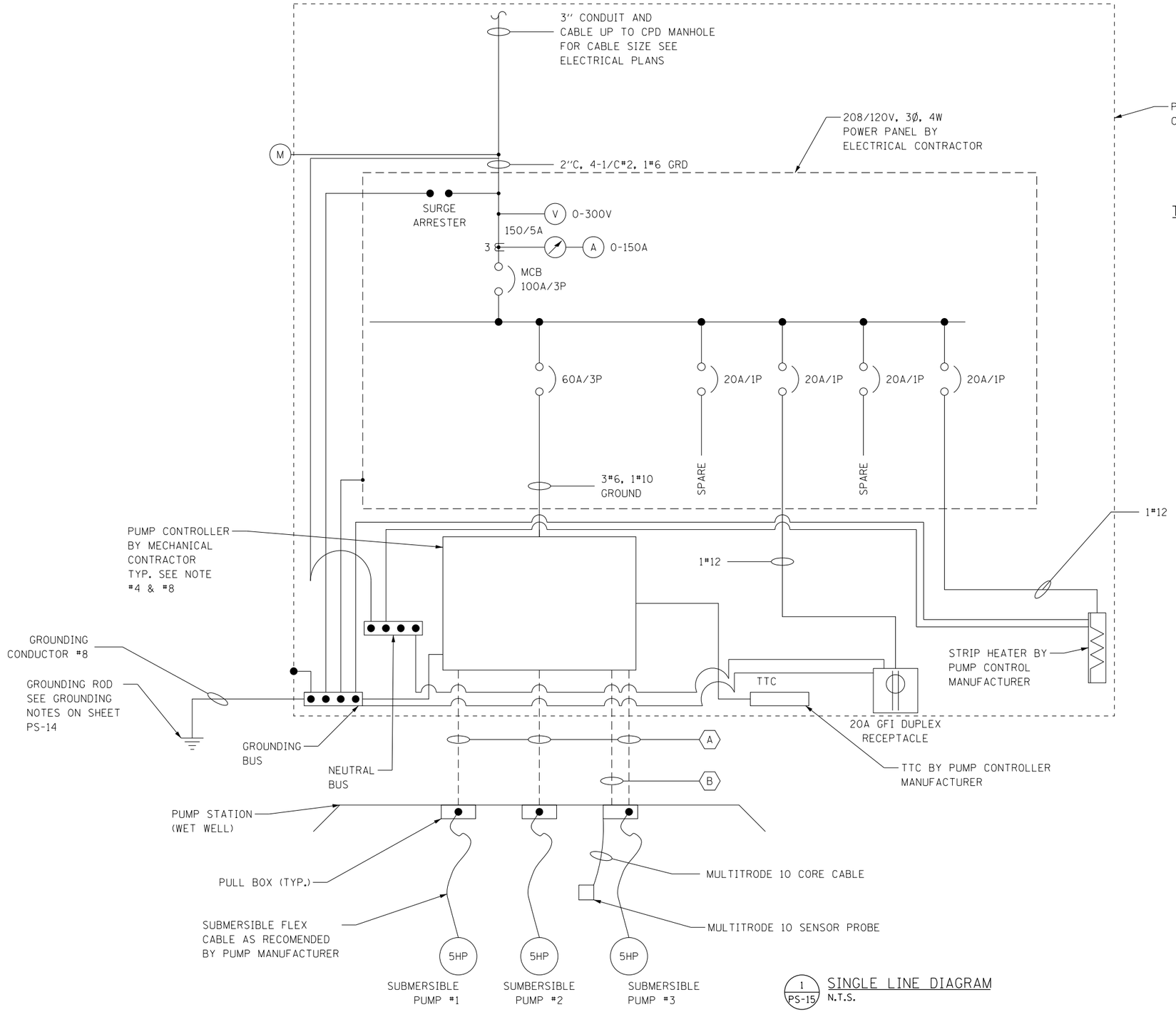


1 PS-15 SINGLE LINE DIAGRAM
N.T.S.

| TAGS | CABLE SIZE & TYPE | CONDUIT SIZE & TYPE |
|---|---|---|
| A | 3-1/C#10,<br>1-1/C#10 GRD | 1.5" DIA PVC SCHEDULE 80<br>FOR POWER |
| B | MULTITRODE 10 CORE<br>PROBE CABLE | 1.5" DIA PVC SCHEDULE 80<br>FOR CONTROL. CABLE PROVIDED<br>BY MECHANICAL CONTRACTOR,<br>INSTALLED BY ELECTRICAL<br>CONTRACTOR. |

## NOTES

1. FOR NOTES, SYMBOLS AND LEGEND SEE SHEET PS-3 .
2. ALL CONTROL WIRES MUST BE #14 AWG, OTHER CONDUCTORS MUST BE AS SPECIFIED.
3. THE CONTRACTOR MUST FURNISH ALL THE ELECTRICAL EQUIPMENT AS SPECIFIED AND INSTALL AS PER DRAWINGS AND THE MANUFACTURER'S RECOMMENDATIONS.
4. MECHANICAL CONTRACTOR MUST FURNISH PUMP STATION CONTROL PANEL, MOTOR STARTERS, CONTROL AND INTERNAL WIRING REQUIRED FOR THE PUMP OPERATION AS PER CPD STANDARDS.
5. ELECTRICAL CONTRACTOR TO PROVIDE 1.5" PVC CONDUIT SCHEDULE 80 FROM CONTROL PANEL ENCLOSURE TO PULL BOX IN THE PUMPING STATION.
6. THE CONTRACTOR MUST PROVIDE 120/208V POWER PANELS AND INSTALL THE TRANSCLOSURE AFTER THE DIFFERENT COMPONENTS SHOWN INSIDE ARE INTEGRATED BY MECHANICAL CONTRACTOR FOR A FUNCTIONALLY OPERATING SYSTEM.
7. CONNECT THE SURGE ARRESTER GROUND TO THE PUMP STATION CONTROL PANEL BUS AS SHOWN.
8. MOTOR STARTERS MUST BE NEMA SIZE '2' FULL VOLTAGE NON-REVERSING TYPE PROVIDED BY MECHANICAL CONTRACTOR AS PART OF THE PUMP CONTROLLER. FOR SCHEMATIC DIAGRAM SEE SHEET PS-23 .

PLOT DATE: 5/17/2021
PLOT SCALE: 40.0000 ' / in.
FILE NAME: pw:\\CIVIL-PW-INT.civiltech.local\Civiltech Projects\Documents\Projects\3153\CADD\Sheets\D&U\Pump Stations\ps-pe-020.dgn

| | | | | |
|---|---|---|---|---|
| DESIGN: MSA | | | | |
| DRAWN: MSA | | | | |
| CHECKED: TKL | | | | |
| APPROVED: | NO. | BY | DATE | DESCRIPTION |
| DATE: 01/22/2021 | REVISIONS | | | |

CDOT CHICAGO DEPARTMENT OF TRANSPORTATION

C*NECT

**PUMP STATION**
**SINGLE LINE DIAGRAM**
**HAYES/LSD**

**JACKSON PARK MOBILITY IMPROVEMENTS**

STA. TO STA.

| | |
|---|---|
| CONTRACT NO. - | TOTAL SHEETS 1434 |
| PROJECT NO. B-7-203 | SHEET NO. 558 |
| SCALE: | DRAWING NO. PS-15 |

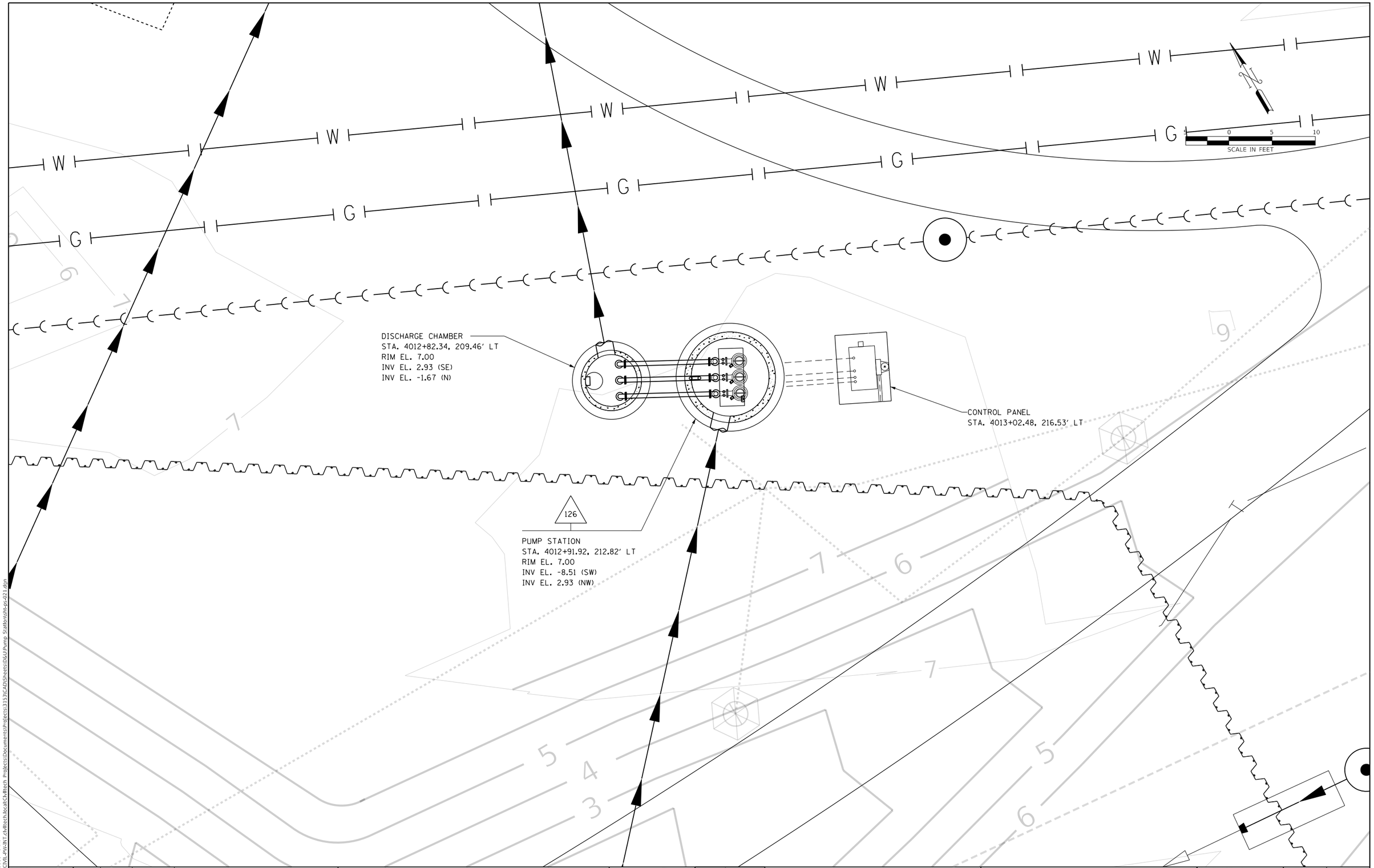


PLOT DATE: 5/17/2021
PLOT SCALE: 10.0000 ' / in.
FILE NAME: pw:\\CIVIL-PW-INT.civiltech.local:Civiltech Projects\Documents\Projects\3153\CAD\Sheets\D&U\Pump Station\sht-ps-021.dgn

| | | | | |
|---|---|---|---|---|
| DESIGN: MSA | | | | |
| DRAWN: MSA | | | | |
| CHECKED: TKL | | | | |
| APPROVED: | NO. | BY | DATE | DESCRIPTION |
| DATE: 01/22/2021 | REVISIONS | | | |

CDOT CHICAGO DEPARTMENT OF TRANSPORTATION

C*NECT

PUMP STATION
PUMP STATION SITE PLAN
HAYES/CORNELL

JACKSON PARK MOBILITY IMPROVEMENTS

STA. TO STA.

| | | |
|---|---|---|
| CONTRACT NO. - | TOTAL SHEETS 1434 | SHEET NO. 559 |
| PROJECT NO. B-7-203 | DRAWING NO. PS-16 | |
| SCALE: | | |

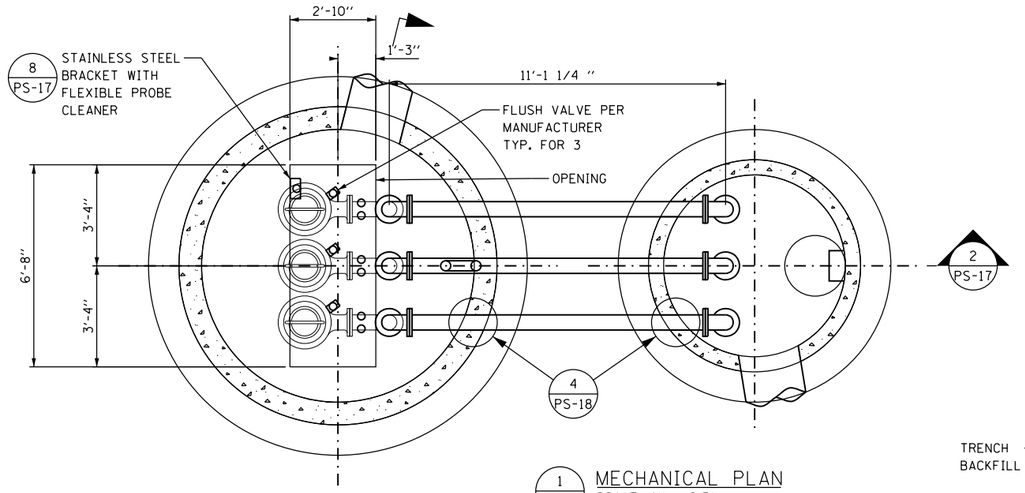


1 / PS-17 MECHANICAL PLAN
SCALE: 1" = 2.5'

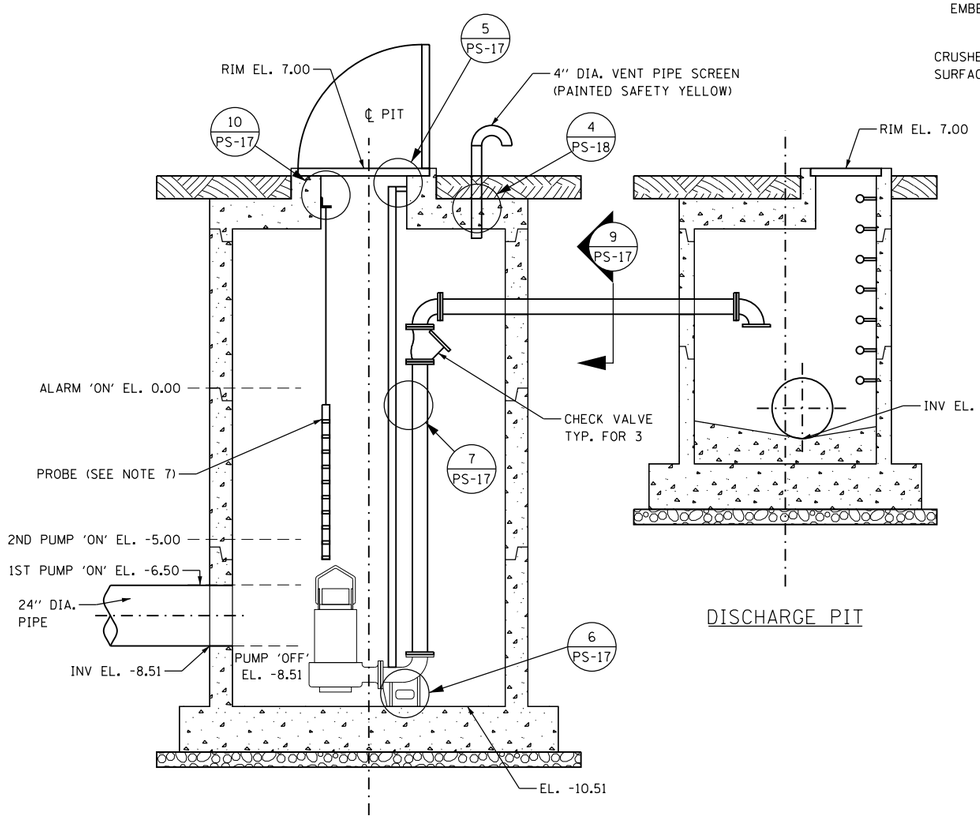


DISCHARGE PIT

PUMP STATION (WET WELL)

2 / PS-17 SECTION 2
SCALE: 1" = 2.5'

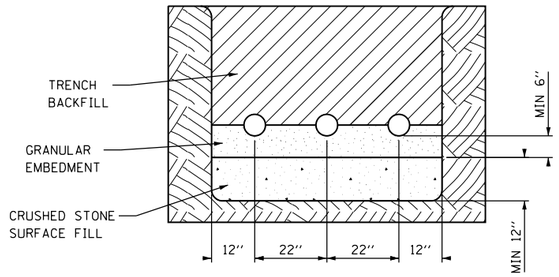


9 / PS-17 SECTION 9
GRANULAR EMBEDMENT FOR PIPES
N.T.S.

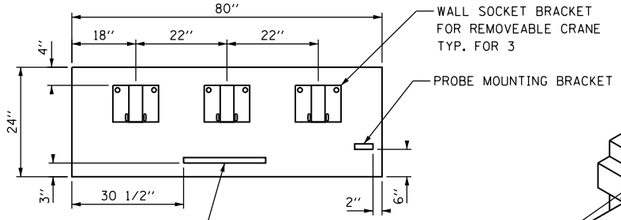


10 / PS-17 DETAIL 10
BRACKETS MOUNTING
N.T.S.

NOTES:

1. ALL DIMENSIONS ARE IN INCHES UNLESS OTHERWISE STATED.
2. ALL ELEVATIONS ARE IN FEET.
3. FOR LEGEND, ABBREVIATION AND GENERAL NOTES SEE SHEET PS-1 .
4. FOR SCHEMATIC, SEQUENCE OF OPERATION AND SCHEDULES AND MECHANICAL NOTES SEE SHEET PS-18 .
5. DETAILS SHOWN ARE FOR GENERAL REFERENCE ONLY. FOR ACTUAL DETAILS REFER TO APPROVED VENDORS INSTALLATION INSTRUCTIONS.
6. FOR EXACT LOCATION OF PUMP STATION & DISCHARGE PIT SEE DRAINAGE PLAN SHEETS PUMP STATION SITE PLAN.
7. ADJUST THE LEVELS IN FIELD TO CLOSEST SENSOR NUMBER ON SELECTED PROBE.
8. SEE DETAIL 4 ON SHEET PS-18 .

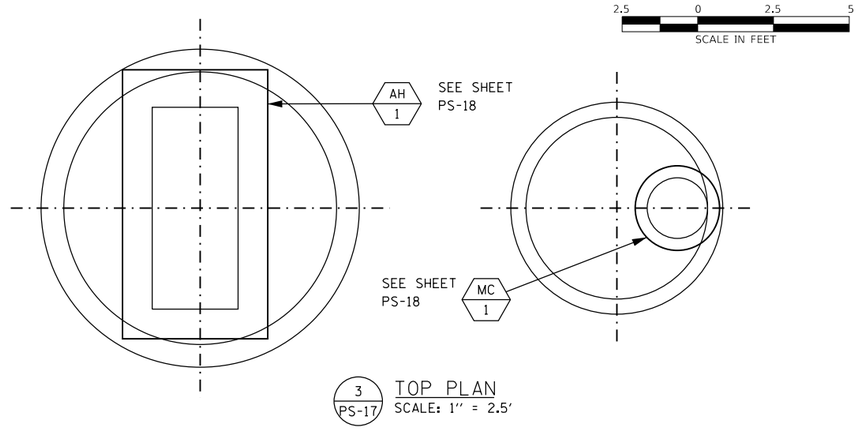


3 / PS-17 TOP PLAN
SCALE: 1" = 2.5'

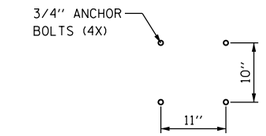


6 / PS-17 DETAIL 6
ANCHOR BOLT DIMENSIONS
N.T.S.




8 / PS-17 DETAIL 8
PROBE MOUNTING
N.T.S.

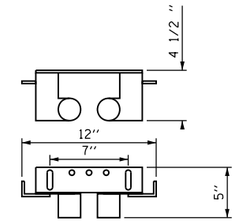


5 / PS-17 DETAIL 5
DUAL RAIL UPPER GUIDE BAR BRACKET
N.T.S.

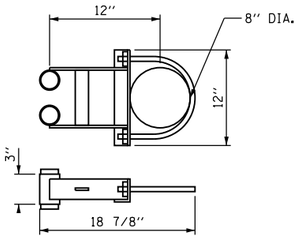


NOTE: DUAL RAIL INTERMEDIATE GUIDE BAR BRACKET (USED FOR) GUIDE BARS OVER 20' LONG SPACED EVERY 10'.

7 / PS-17 DETAIL 7
DUAL RAIL INTEMEDIATE GUIDE BAR BRACKET
N.T.S.

PLOT DATE: 5/17/2021
PLOT SCALE: 5.0000 ' / in.
FILE NAME: pw:\\CIVIL-PW-INT.dotTech.local\CivilTech Projects\Documents\Projects\3153\CADD\Sheets\DGN\Pump Station\ghd-ps-006.dgn

| | | | | | |
|---|---|---|---|---|---|
| DESIGN: MSA | | | | | |
| DRAWN: MSA | | | | | |
| CHECKED: TKL | | | | | |
| APPROVED: | NO. | BY | DATE | DESCRIPTION | |
| DATE: 01/22/2021 | REVISIONS | | | | |

CDOT CHICAGO DEPARTMENT OF TRANSPORTATION

C*NECT

PUMP STATION
MECHANICAL SECTIONS
HAYES/CORNELL

JACKSON PARK MOBILITY IMPROVEMENTS

STA. TO STA.

| | |
|---|---|
| CONTRACT NO. | - |
| PROJECT NO. | B-7-203 |
| SCALE: | |
| TOTAL SHEETS | 1434 |
| SHEET NO. | 560 |
| DRAWING NO. | PS-17 |

## PUMP SCHEDULE

| TAG | SERVICE | TYPE | CFS | HEAD FT | RPM | DISC SIZE | MOTOR DATA HP | VOLT | PH | HZ | REMARKS |
|---|---|---|---|---|---|---|---|---|---|---|---|
| P 1 | STORM WATER | SUBMERSIBLE | 1.14 | 10.19 | 1755 | 6'' | 3.9 | 230 | 1 | 60 | • |
| P 2 | STORM WATER | SUBMERSIBLE | 1.14 | 10.19 | 1755 | 6'' | 3.9 | 230 | 1 | 60 | • |
| P 3 | STORM WATER | SUBMERSIBLE | 1.14 | 10.19 | 1755 | 6'' | 3.9 | 230 | 1 | 60 | • |

• PROVIDE DUAL RAIL SYSTEM WITH DUAL RAIL GUIDE SUPPORT BRACKETS, SUPPORT FOR BASE ELBOW OF PUMPS AND FLUSH VALVE SYSTEM AND ALSO PROVIDE TRIPLEX PUMP CONTROLLER WITH MULTITRODE LIQUID LEVEL CONTROL.

## VENTILATION SCHEDULE

| ROOM NAME | ROOM PURPOSE | ROOM SQFT | NATURAL LIGHT & VENTILATION CODE GL AREA SQF | CODE VENT AREA SQF | ACTUAL GL AREA SQF | ACTUAL VENT AREA SQF | MECHANICAL VENTILATION CODE AIR-SUP LPS | CODE AIR-EXH LPS | ACTUAL AIR-SUP LPS | ACTUAL AIR-EXH LHS | REMARKS |
|---|---|---|---|---|---|---|---|---|---|---|---|
| PUMP STATION (WET WELL) | PUMP LIQUID | 440.46 | 0 | 0 | 0 | 0.32 | 0 | 0 | 0 | 0 | VENTILATION THRU. 4'' PIPE |
| DISCHARGE PIT | DISCHARGE | 129.17 | 0 | 0 | 0 | 3.66 | 0 | 0 | 0 | 0 | GRATED COVER |

## ACCESS HATCH / MANHOLE COVER SIZES & TYPES

| TAG | LOCATION | CLEAR OPENING SIZE W x L | OUTSIDE MANHOLE COVER SIZE (EA) W x L | NO. OF COVERS | TYPE OF COVER | MATERIAL | STYLE | REMARKS |
|---|---|---|---|---|---|---|---|---|
| AH 1 | PUMP STATION (WET WELL) | 80'' x 34'' | 90.5'' x 52.5'' | 3 | SOLID | HEAVY DUTY ALUMINUM | CHANNEL H2O | SEE MANHOLE COVER NOTES BELOW |
| MC 1 | DISCHARGE PIT | 24'' DIA. | 33.5'' DIA. | 1 | GRATED | GRAY IRON | - | SEE MANHOLE COVER NOTES BELOW |

## MANHOLE COVER NOTES

1. MANHOLE COVERS MUST BE BOLTED TO FRAMES WITH STAINLESS STEEL CAP SCREWS.
2. SOLID COVERS MUST BE PROVIDED WITH RING HANDLES.
3. OPENING SIZES & COVER SIZES ARE IN INCHES.
4. VERIFY IN FIELD MANHOLE COVER SIZES AS PER THE MODEL SELECTED, MATCHING THE CORRESPONDING CLEAR OPENINGS.
5. FOR SPECIFICATIONS SEE STRUCTURAL WORK SECTION.

## MECHANICAL NOTES:

1. INSTALL PUMPS AS PER LOCATIONS SHOWN ON DRAWINGS WITH ALL ACCESSORIES.
2. PROVIDE AND INSTALL DUAL RAILS ON PUMPS AS SHOWN ON DWG'S. MATERIAL FOR DUAL RAIL MUST BE 304 STAINLESS STEEL.
3. INSTALL DUAL RAIL UPPER SUPPORT GUIDE BAR BRACKET AS SHOWN ON DWG PS-17 .
4. INSTALL DUAL RAIL INTERMEDIATE SUPPORT GUIDE BAR BRACKET AT EVERY 10' AS SHOWN ON DWG PS-17 .
5. INSTALL FLUSH VALVE SYSTEM ON ALL PUMPS, AS PER MANUFACTURER'S INSTRUCTION.
6. INSTALL HIGH WATER WARNING ALARM THROUGH AUTO-DIALER SYSTEM TO EITHER DEPT. OF STREETS AND SANITATION'S RADIO OR 311 AS DECIDED BY CPD. FOR CONTROLLER SCHEMATIC DIAGRAM SEE DWG. PS-23 .
7. INSTALL 4'' VENT PIPE.
8. FOR NOTES, LEGEND AND ABBREVIATIONS, REFER DWG PS-1 .
9. ALL DIMENSIONS ARE IN INCHES UNLESS OTHERWISE NOTED.
10. INSTALL PROBE LIQUID CONTROL SYSTEM AS SHOWN ON DWG. PS-17 AS PER MANUFACTURER'S INSTRUCTION.

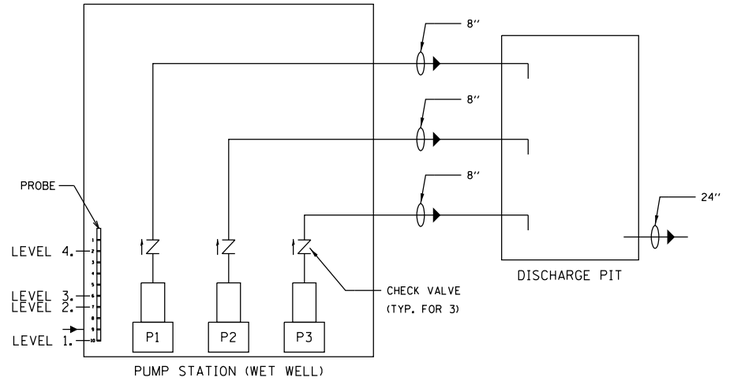


PUMPS SCHEMATIC DIAGRAM
N.T.S.

## SEQUENCE OF OPERATIONS:

1. AT ANY TIME ANY ONE PUMP OR TWO PUMPS WILL BE WORKING DEPEDING UPON THE LEVEL OF WATER. THE THIRD PUMP WILL BE STAND-BY.

   THE CONTROL FUNCTION MUST PROVIDE FOR THE OPERATION OF THE PUMPS UNDER NORMAL CONDITIONS, AND MUST ALTERNATE THE PUMPS ON EACH PUMP DOWN CYCLE TO EQUALIZE THE RUN TIME. IN THE EVENT THE INCOMING FLOW EXCEEDS THE PUMPING CAPACITY OF THE LEAD PUMP, SUBSEQUENT PUMPS MUST AUTOMATICALLY START TO HANDLE THE INCREASED FLOW. AS THE FLOW DECREASES, THE PUMPS MUST CUT OFF AT THE ELEVATIONS AS SHOWN ON THE PLANS.

2. THE FEATURE ON TRIPLEX PUMP CONTROLLER ''MAX PUMP OFF TIME'' WILL BE USED TO PREVENT WET WELL BECOMING SEPTIC. IF NO PUMP HAS ACTIVATED WITHIN THE SET TIME WHEN WATER IS BELOW LEVEL 2, THE DUTY PUMP WILL RUN. MAXIMUM PUMP OFF TIME CAN BE SET BETWEEN 15 MIN AND 10 HOURS.

OPERATIONAL SEQUENCE AS FOLLOWS: (SEE DWG. PS-17 )
LEVEL 1: PUMP WILL STOP
LEVEL 2: FIRST PUMP WILL START
LEVEL 3: SECOND PUMPS WILL START AND WILL STOP AT LEVEL 2.
LEVEL 4: ALARM ON

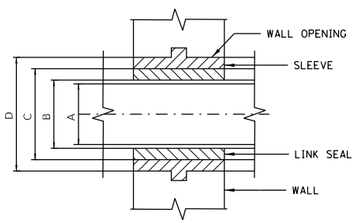


4 PS-18 DETAIL 4
PIPE PENETRATION
N.T.S.

| NOM. PIPE DIA (IN) | A IN | B IN | C IN | D IN |
|---|---|---|---|---|
| 4 | 4 | 5 | 8 | 9 |
| 6 | 6 | 7 | 10 | 11 |
| 8 | 8 | 9.5 | 12 | 13 |

TABLE FOR DETAIL 4.

PLOT DATE: 5/17/2021
PLOT SCALE: 40.0000 ' / in.
FILE NAME: pw:\\CWI-PW-INT.cityofchicago.org:CWI-PW-INT.civiltech.local\CivilTech Projects\Documents\Projects\3153\C4D\Sheets\D6J\Pump Stations\ps-pz-007.dgn

| | | | | |
|---|---|---|---|---|
| DESIGN: MSA | | | | |
| DRAWN: MSA | | | | |
| CHECKED: TKL | | | | |
| APPROVED: | NO. | BY | DATE | DESCRIPTION |
| DATE: 01/22/2021 | REVISIONS | | | |

CHICAGO DEPARTMENT OF TRANSPORTATION

C*NECT

PUMP STATION
MECHANICAL NOTES
HAYES/CORNELL

JACKSON PARK MOBILITY IMPROVEMENTS

STA. TO STA.

| | |
|---|---|
| CONTRACT NO. - | TOTAL SHEETS 1434 |
| PROJECT NO. B-7-203 | SHEET NO. 561 |
| SCALE: | DRAWING NO. PS-18 |

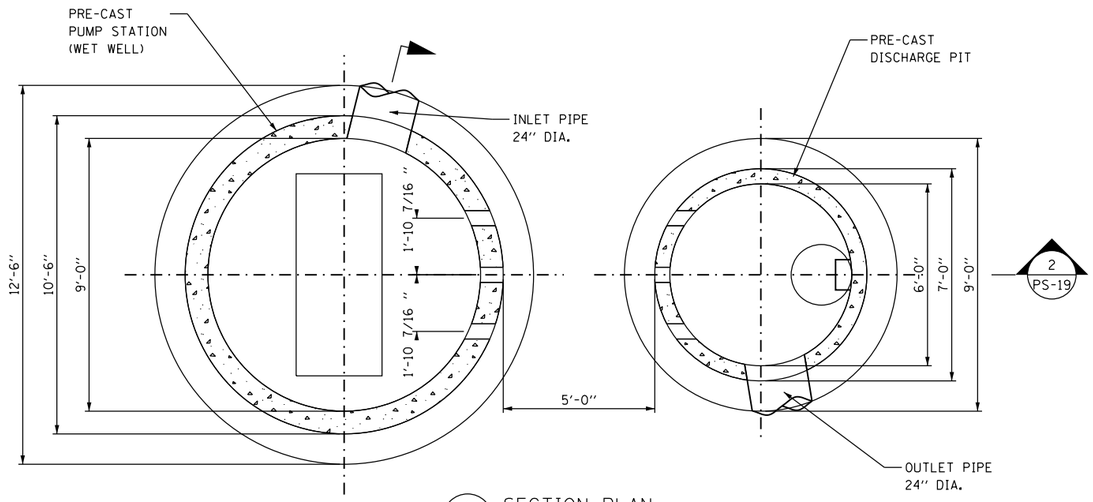


1 PS-19 SECTION PLAN
SCALE: 1" = 2.5'

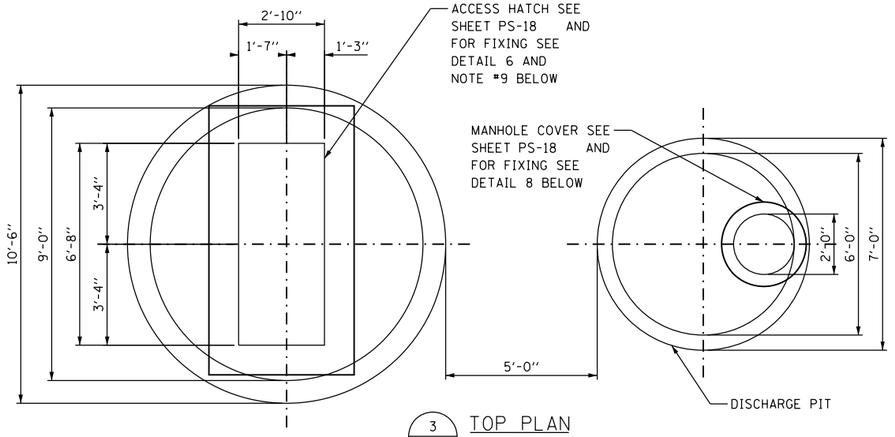


3 PS-19 TOP PLAN
SCALE: 1" = 2.5'

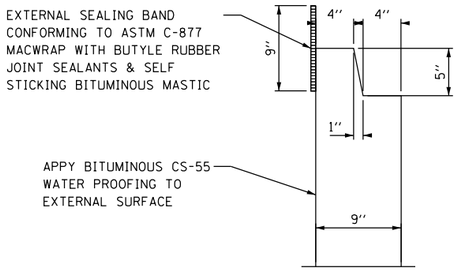


4 PS-19 DETAIL 4 (TYP.)
N.T.S.

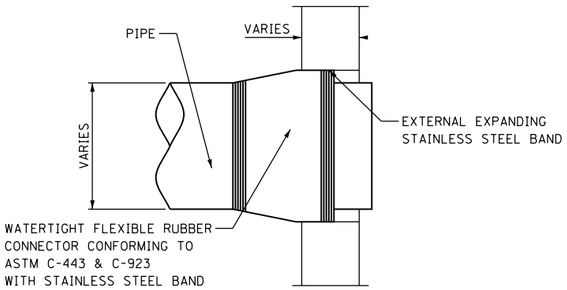


5 PS-19 DETAIL 5 (TYP.)
N.T.S.

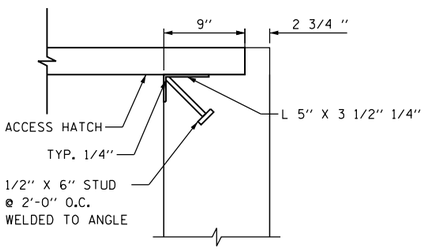


6 PS-19 DETAIL 6 (TYP.)
N.T.S.

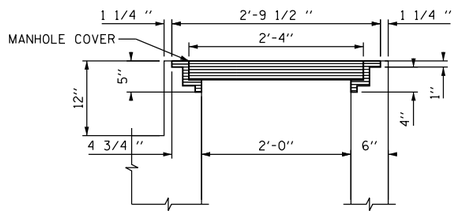


8 PS-19 DETAIL 8 (TYP.)
MANHOLE COVER
N.T.S.

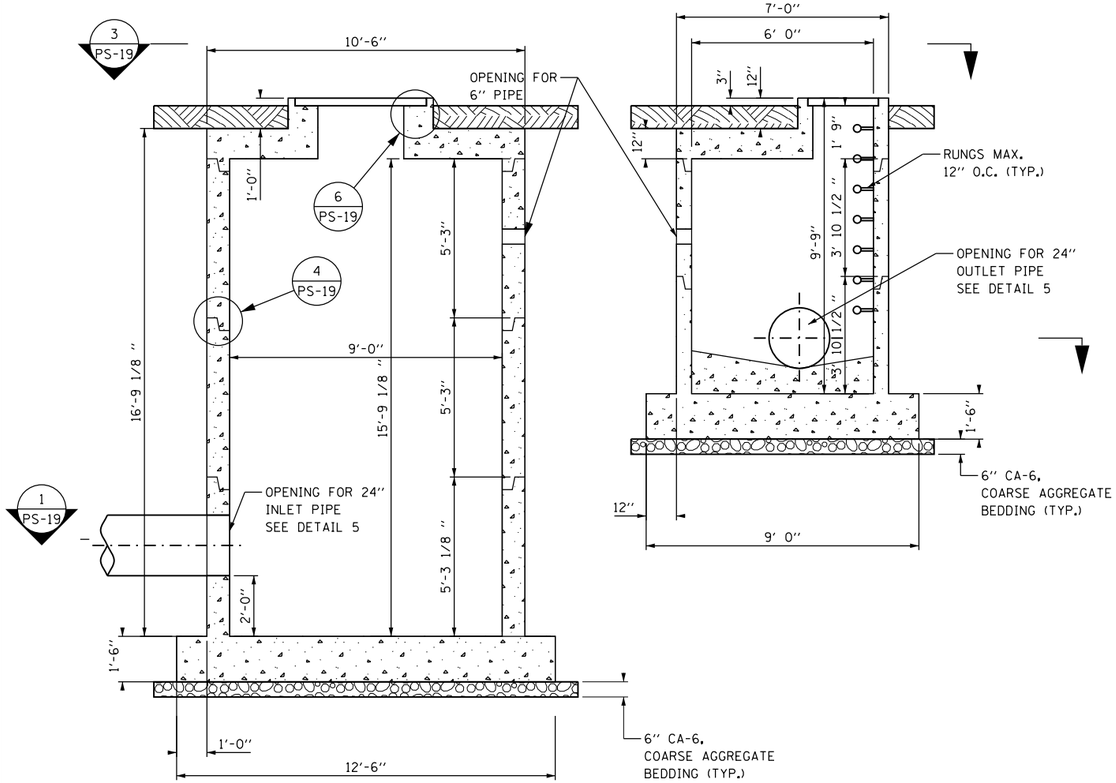


2 PS-19 SECTION 2
SCALE: 1" = 2.5'

## NOTES:

1. ALL DIMENSIONS ARE IN FEET UNLESS OTHERWISE STATED.
2. ALL ELEVATIONS ARE IN FEET.
3. FOR GENERAL NOTES SEE SHEET PS-2.
4. FOR REINFORCEMENT DETAILS SEE SHEET PS-22.
5. FOR LOCATION OF PUMP STATION, DISCHARGE PIT, INLET AND OUTLET PIPES SEE PUMP STATION SITE PLAN (PS-16) AND DRAINAGE PLAN SHEETS.
6. FOR EXACT LOCATION AND ELEVATION OF PIPE SLEEVES, SEE CORRESPONDING PUMP STATION MECHANICAL AND STRUCTURAL SHEETS.
7. CONTRACTOR TO PROVIDE TEMPORARY EARTH SUPPORT SHEET PILING, DEWATERING, ETC. FOR CONSTRUCTION OF PUMP STATION AND DISCHARGE PIT.
8. FOR PROVISION OF HOLES IN CONCRETE FOR ELECTRICAL CONDUITS AND OTHER ELECTRICAL WORK SEE PS-20.
9. ACCESS HATCH 34" X 68" TO BE INSTALLED IN THE PRE-CAST ROOF SLAB AT THE TIME OF PRECASTING.
10. FOR EXACT LOCATION OF CONCRETE PAD SEE SHEET PS-16. FOR CONCRETE PAD DIMENSIONS AND REINFORCEMENT DETAILS SEE SHEET PS-22

PLOT DATE: 5/17/2021
PLOT SCALE: 3.0000 ' / in.
FILE NAME: pw:\\CVIL-PW-INT.civiltech.local:CivilTech Projects:Documents\Projects\3153\CADSheets\DGA\Pump Stations\sht-ps-012.dgn

| | | | | |
|---|---|---|---|---|
| DESIGN: MSA | | | | |
| DRAWN: MSA | | | | |
| CHECKED: TKL | | | | |
| APPROVED: | NO. | BY | DATE | DESCRIPTION |
| DATE: 01/22/2021 | REVISIONS | | | |

CDOT CHICAGO DEPARTMENT OF TRANSPORTATION

C*NECT

**PUMP STATION STRUCTURAL SECTIONS HAYES/CORNELL**

**JACKSON PARK MOBILITY IMPROVEMENTS**

STA. TO STA.

| | |
|---|---|
| CONTRACT NO. - | TOTAL SHEETS 1434 / SHEET NO. 562 |
| PROJECT NO. B-7-203 | DRAWING NO. PS-19 |
| SCALE: | |

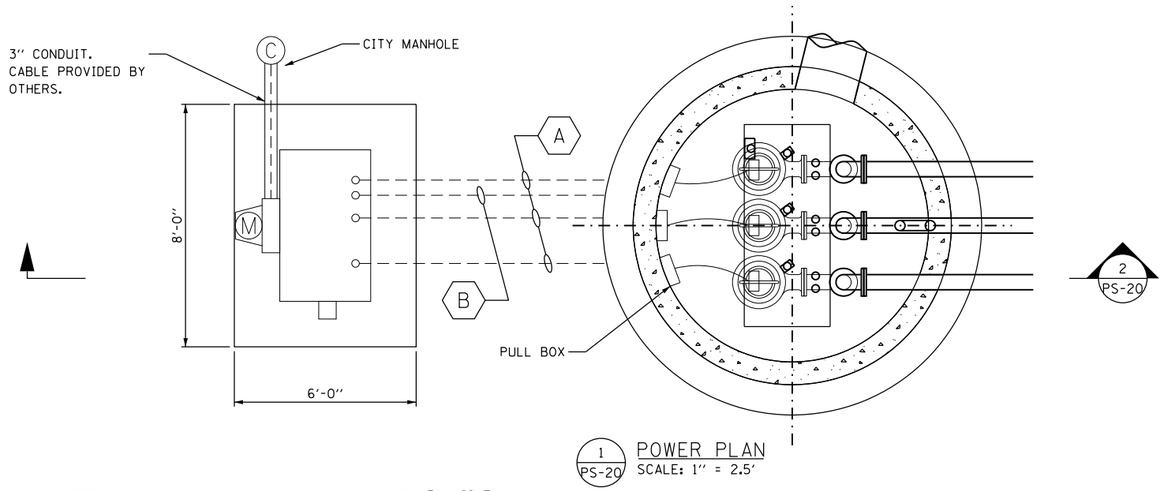


1 PS-20 POWER PLAN
SCALE: 1" = 2.5'

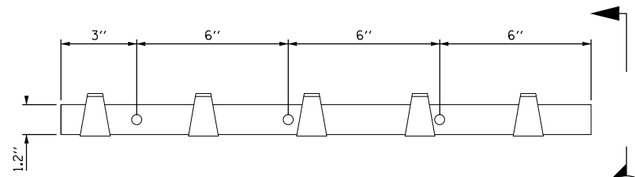


3 PS-20 CABLE HOLDER DETAIL
N.T.S.

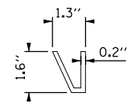


4 PS-20 SIDE VIEW
N.T.S.

## NOTE:

STAINLESS STEEL CABLE HOLDER
PROVIDED BY MECHANICAL CONTRACTOR

CABLE HOLDER DETAIL SUPPORTED FROM ROOF IS SUGGESTIVE ONLY. CONTRACTOR MUST FOLLOW MANUFACTURER STANDARD DETAIL AND SPECIFICATION.

## GROUNDING NOTES:

1. THE FOLLOWING NOTES, GROUNDING METHODS AND DETAILS ARE GENERAL IN NATURE. THE CONTACTOR MUST PROVIDE ALL MATERIALS REQUIRED TO INSTALL A COMPLETE GROUNDING SYSTEM TO SUIT THE PROJECT AND THE CONFORM WITH THE MOST CURRENT LOCAL AND NATIONAL ELECTRICAL CODES AND STANDARDS.
2. GROUND RODS MUST BE COPPERWELD 3" DIA. BY 10' LONG.
3. THE MAIN GROUNDING CONDUCTOR MUST BE #2/0 STANDED BARE COPPER WIRE.
4. ALL BENDS IN GROUNDING CONDUCTORS MUST HAVE 12" MIN. RADIUS.
5. GROUNDING CONNECTIONS MUST BE MADE AS FOLLOWS TO FORM A CONTINUOUS GROUNDING SYSTEM.
   a. CADWELD OR THERMOWELD ALL CABLE TO CABLE.
   b. CABLE TO GROUND ROD AS SHOWN ON DETAILS.
6. ENCLOSED IN PIPE ALL EXPOSED GROUNDING CONDUCTORS TO PROTECT AGAINST PHYSICAL DAMAGE.
7. WHEREVER CONDUIT IS USED TO PROTECT GROUND CABLE BOND THE CABLE TO CONDUIT AT BOTH ENDS TO PROVIDE GROUND CONTINUITY.
8. GROUND RODS MUST NOT BE DRIVEN AT AN ANGLE OF MORE THAN 30° TO THE VERTICAL.
9. GROUNDING ELECTRODES MUST NOT BE PLACED IN ROCK, GRAVEL OR ROCKY TYPE SOIL.
10. CHEMICAL TREATMENT OF SOIL TO LOWER GROUND RESISTANCE IS NOT AN ACCEPTABLE METHOD TO LOWER THE GROUNDING IMPEDANCE.
11. GROUNDING SYSTEM MUST BE TESTED USING THE 3-ELECTRODE AC "FALL OF POTENTIAL" METHOD. MAXIMUM GROUND IMPEDANCE MUST BE 5 OHMS. TESTED AND ACCEPTED BY THE CONTRACTOR BEFORE IT IS RENDERED INACCESSABLE BY BACK FILLING, PAVING, CONCRETE SLABS, ETC. TEST RESULTS MUST BE SUBMITTED TO ENGINEER FOR APPROVAL.
12. IF THE PANEL BOARD IS PROVIDED WITH AN EQUIPMENT GROUND BUS, THE GROUND CONDUCTOR MUST BE CONNECTED DIRECTLY TO THE GROUND BUS AND A BONDING JUMPER (SIZE PER NEC TABLE 250-95) PROVIDED TO THE PANEL BOARD ENCLOSURE.
13. PROVIDE A BONDING JUMPER (SIZED PER NEC 250-95) WHEN THE EQUIPMENT GROUNDING CONDUCTOR IS INSTALLED AS A SEPARATE CONDUCTOR TO EITHER THE PANEL BOARD ENCLOSURE OR A PANEL BOARD EQUIPMENT GROUND BUS.
14. GROUNDING ELECTRODE CONDUCTORS MUST BE INSTALLED IN ONE CONTINUOUS LENGTH, WITHOUT SPLICES OR JOINTS.

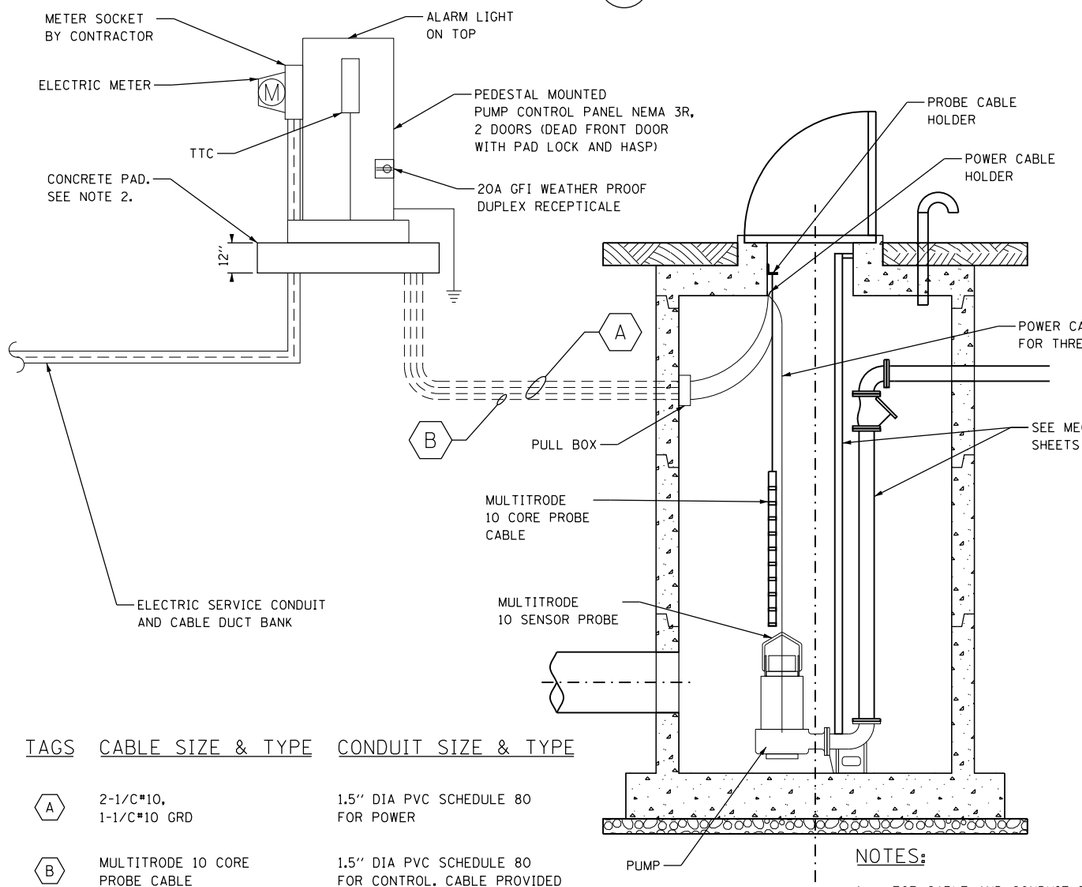


| TAGS | CABLE SIZE & TYPE | CONDUIT SIZE & TYPE |
|---|---|---|
| A | 2-1/C#10,<br>1-1/C#10 GRD | 1.5" DIA PVC SCHEDULE 80<br>FOR POWER |
| B | MULTITRODE 10 CORE<br>PROBE CABLE | 1.5" DIA PVC SCHEDULE 80<br>FOR CONTROL. CABLE PROVIDED<br>BY MECHANICAL CONTRACTOR. |

2 PS-20 SECTION 2
SCALE: 1" = 2.5'

## NOTES:

1. FOR CABLE AND CONDUIT DETAIL SEE SHEET PS-21.
2. FOR CONCRETE PAD DETAIL SEE SHEET PS-22. FOR EXACT LOCATION OF CONCRETE PAD SEE SHEET PS-22.

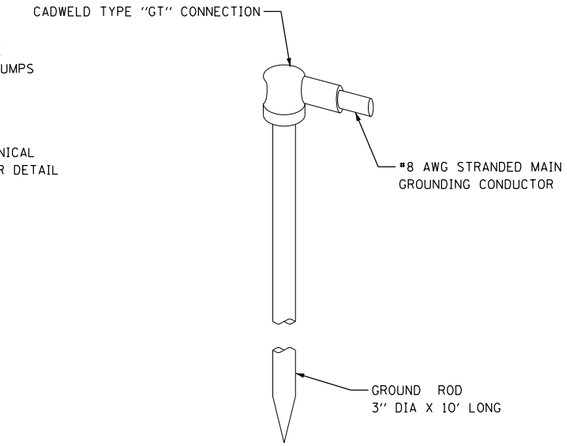


5 PS-8 CONDUCTOR TO GROUND ROD CONNECTION
N.T.S.

PLOT DATE: 5/17/2021
PLOT SCALE: 5.0000 ' / in.
FILE NAME: pw:\\CTVIL-PWINTr.dvlltech.local:CivilTech Projects\Documents\Projects\3153\tCADSheets\DGU\Pump Stations\ath-ps-022.dgn

| | | | | |
|---|---|---|---|---|
| DESIGN: MSA | | | | |
| DRAWN: MSA | | | | |
| CHECKED: TKL | | | | |
| APPROVED: | NO. | BY | DATE | DESCRIPTION |
| DATE: 01/22/2021 | REVISIONS | | | |

CHICAGO DEPARTMENT OF TRANSPORTATION

C*NECT

**PUMP STATION**
**ELECTRICAL SECTIONS**
**HAYES/CORNELL**

**JACKSON PARK MOBILITY IMPROVEMENTS**

STA. TO STA.

| | |
|---|---|
| CONTRACT NO. - | TOTAL SHEETS 1434 / SHEET NO. 563 |
| PROJECT NO. B-7-203 | DRAWING NO. PS-20 |
| SCALE: | |

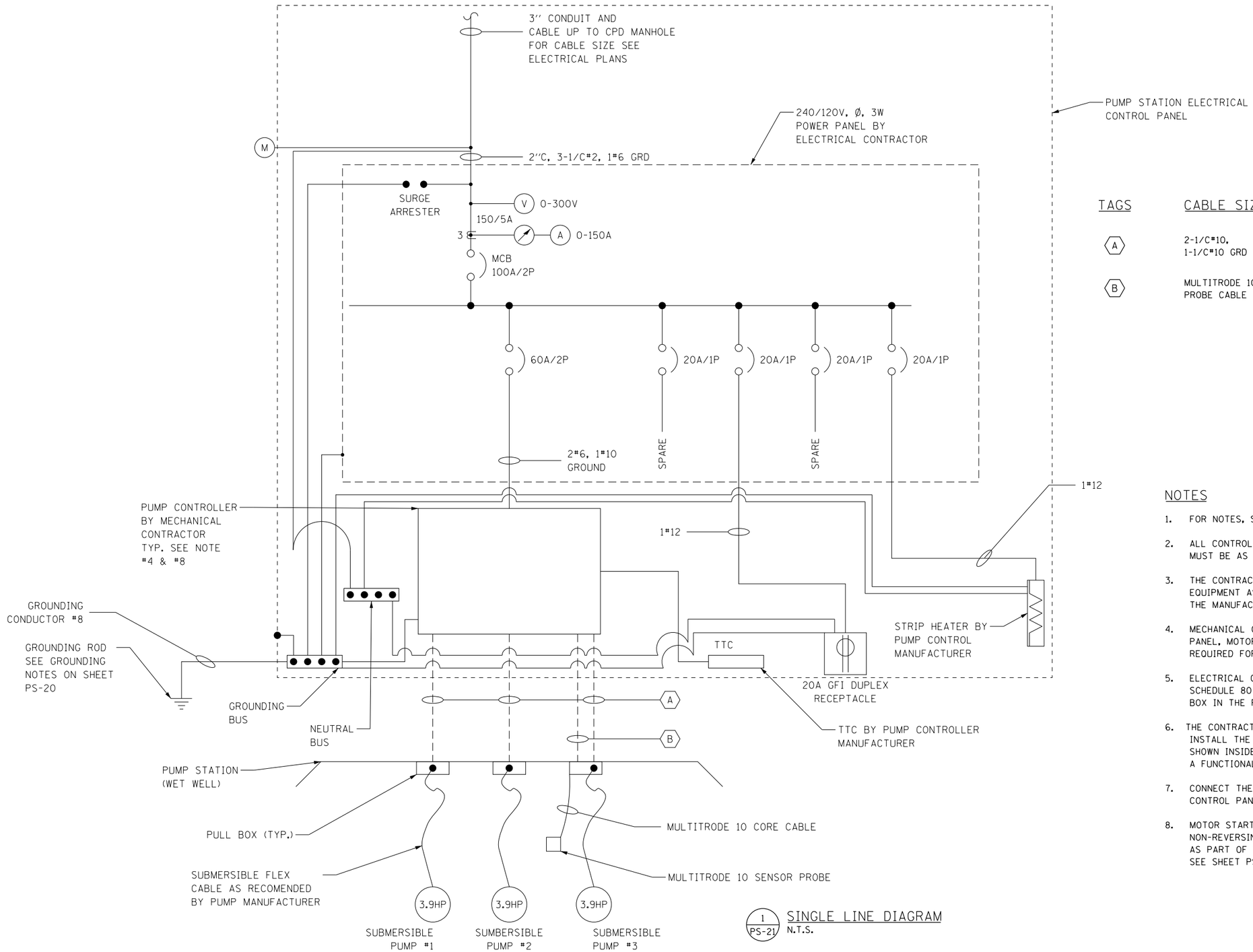


1 PS-21 SINGLE LINE DIAGRAM
N.T.S.

| TAGS | CABLE SIZE & TYPE | CONDUIT SIZE & TYPE |
|---|---|---|
| A | 2-1/C#10, 1-1/C#10 GRD | 1.5" DIA PVC SCHEDULE 80 FOR POWER |
| B | MULTITRODE 10 CORE PROBE CABLE | 1.5" DIA PVC SCHEDULE 80 FOR CONTROL. CABLE PROVIDED BY MECHANICAL CONTRACTOR, INSTALLED BY ELECTRICAL CONTRACTOR. |

## NOTES

1. FOR NOTES, SYMBOLS AND LEGEND SEE SHEET PS-3 .
2. ALL CONTROL WIRES MUST BE #14 AWG, OTHER CONDUCTORS MUST BE AS SPECIFIED.
3. THE CONTRACTOR MUST FURNISH ALL THE ELECTRICAL EQUIPMENT AS SPECIFIED AND INSTALL AS PER DRAWINGS AND THE MANUFACTURER'S RECOMMENDATIONS.
4. MECHANICAL CONTRACTOR MUST FURNISH PUMP STATION CONTROL PANEL, MOTOR STARTERS, CONTROL AND INTERNAL WIRING REQUIRED FOR THE PUMP OPERATION AS PER CPD STANDARDS.
5. ELECTRICAL CONTRACTOR TO PROVIDE 1.5" PVC CONDUIT SCHEDULE 80 FROM CONTROL PANEL ENCLOSURE TO PULL BOX IN THE PUMPING STATION.
6. THE CONTRACTOR MUST PROVIDE 120/208V POWER PANELS AND INSTALL THE TRANSCLOSURE AFTER THE DIFFERENT COMPONENTS SHOWN INSIDE ARE INTEGRATED BY MECHANICAL CONTRACTOR FOR A FUNCTIONALLY OPERATING SYSTEM.
7. CONNECT THE SURGE ARRESTER GROUND TO THE PUMP STATION CONTROL PANEL BUS AS SHOWN.
8. MOTOR STARTERS MUST BE NEMA SIZE '2' FULL VOLTAGE NON-REVERSING TYPE PROVIDED BY MECHANICAL CONTRACTOR AS PART OF THE PUMP CONTROLLER. FOR SCHEMATIC DIAGRAM SEE SHEET PS-23 .

PLOT DATE: 5/17/2021
PLOT SCALE: 40.0000 ' / in.
FILE NAME: pw:\\CIVIL-PW-INT.civiltech.local:Civiltech Projects\Documents\Projects\3153\CAD\Sheets\D&U\Pump Station\sht-ps-023.dgn

| | | | | |
|---|---|---|---|---|
| DESIGN: MSA | | | | |
| DRAWN: MSA | | | | |
| CHECKED: TKL | | | | |
| APPROVED: | NO. | BY | DATE | DESCRIPTION |
| DATE: 01/22/2021 | REVISIONS | | | |

CDOT CHICAGO DEPARTMENT OF TRANSPORTATION

C*NECT

PUMP STATION
SINGLE LINE DIAGRAM
HAYES/CORNELL

JACKSON PARK MOBILITY IMPROVEMENTS

STA. TO STA.

| | | |
|---|---|---|
| CONTRACT NO. - | TOTAL SHEETS 1434 | SHEET NO. 564 |
| PROJECT NO. B-7-203 | DRAWING NO. PS-21 | |
| SCALE: | | |

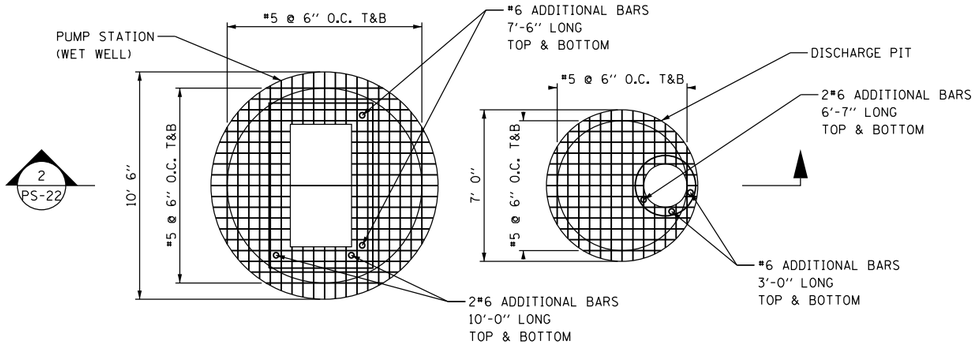


1 PS-22 TOP SLAB REINFORCEMENT PLAN
SCALE: 1" = 3.5'

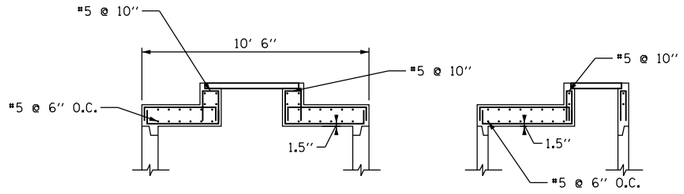


2 PS-22 TOP SLAB REINFORCEMENT SECTION
SCALE: 1" = 3.5'

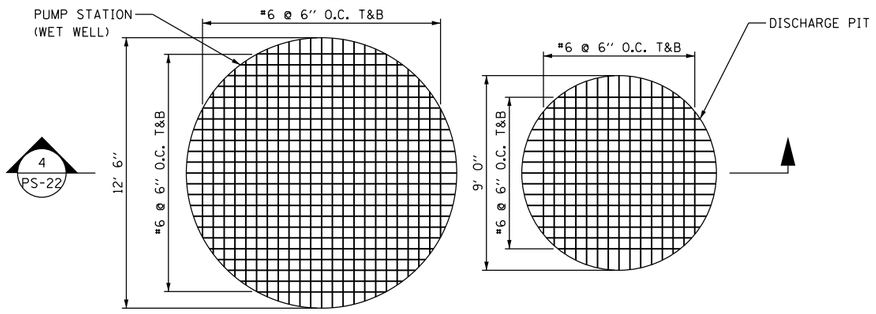


3 PS-22 BOTTOM SLAB REINFORCEMENT PLAN
SCALE: 1" = 3.5'

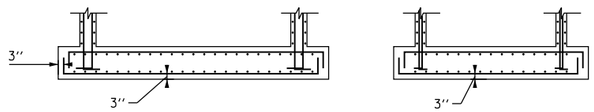


4 PS-22 BOTTOM SLAB REINFORCEMENT SECTION
SCALE: 1" = 3.5'

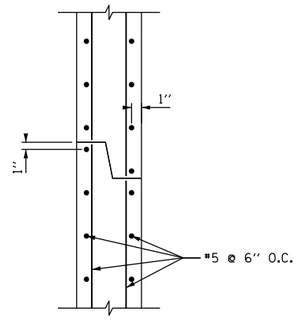


5 PS-22 TYPICAL REINFORCEMENT IN BARREL SECTION
N.T.S.

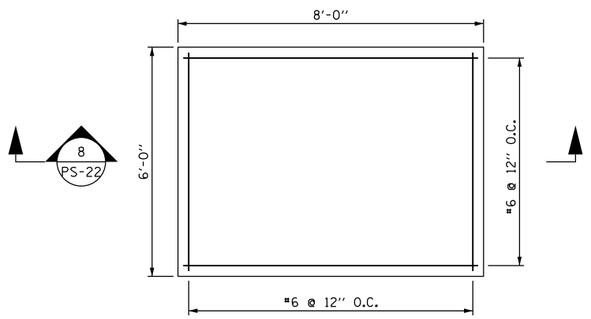


7 PS-22 CONCRETE PAD REINFORCEMENT PLAN
N.T.S.

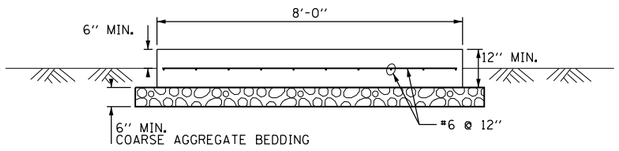


8 PS-22 SECTION - 8
N.T.S.

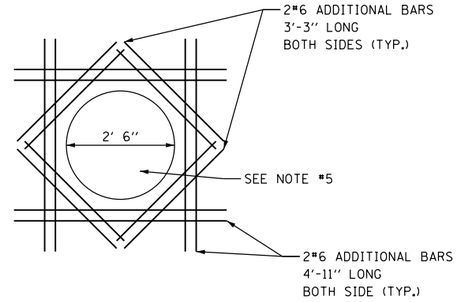


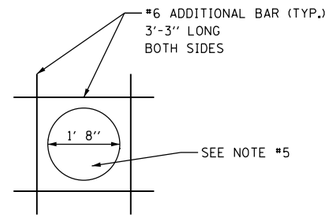


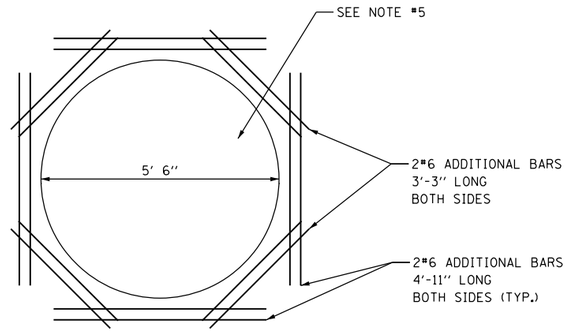


6 PS-22 ADDITIONAL REINFORCEMENT IN WALLS AROUND PIPE OPENING
SCALE: 1" = 1.75"

## NOTES:

1. ALL DIMENSIONS ARE IN INCHES UNLESS OTHERWISE STATED.
2. FOR GENERAL NOTES NEEDED BY THE APPROVED CONTROL SYSTEM VENDOR. SEE SHEET PS-2 .
3. FOR LOCATION OF PUMP STATIONS AND DISCHARGE PITS SEE DRAINAGE PLANS AND PUMP STATION SITE PLANS.
4. FOR EXACT LOCATION OF OPENINGS AND ELEVATION OF PIPE SLEEVES REFER TO MECHANICAL SHEETS.
5. PRE-CAST MANUFACTURER TO VERIFY ACTUAL OPENING FOR PRE-CAST BARRELS FOR PIPES SHOWN ON STRUCTURAL SHEETS USING PRE-CAST PIPE O.D. AND FLEXIBLE RUBBER CONNECTORS SPECIFICATIONS.
6. CONTRACTOR TO SUBMIT COMPLETE STRUCTURAL DESIGN CALCULATIONS AND SHOP DRAWINGS OF PUMP STATIONS AND DISCHARGE PITS, SIGNED AND SEALED BY A LICENCED STRUCTURAL ENGINEER IN THE STATE OF ILLINOIS.
7. CONTRACTOR TO EMBED ELECTRICAL PIPES IN PUMP STATION CONTROL PANEL. COORDINATE WITH ELECTRICAL SHEETS.
8. INSTALL SLEEVES AT THE LOCATIONS AND OF SIZES AS PER THE LOCATIONS NEEDED BY THE APPROVED CONTROL SYSTEM VENDOR.

PLOT DATE: 5/17/2021
PLOT SCALE: 7.0000 ' / in.
FILE NAME: pw:\\CDVL-PW-NT.cdot.local\cdot\Local\CivilTech Projects\Documents\Projects\3153\CAD\Sheets\D&U\Pump Stations\ps-ps-011.dgn

| | | | | | |
|---|---|---|---|---|---|
| DESIGN: MSA | | | | | |
| DRAWN: MSA | | | | | |
| CHECKED: TKL | | | | | |
| APPROVED: | NO. | BY | DATE | DESCRIPTION | |
| DATE: 01/22/2021 | REVISIONS | | | | |

CDOT CHICAGO DEPARTMENT OF TRANSPORTATION
C*NECT

**PUMP STATION REINFORCEMENT DETAILS**

**JACKSON PARK MOBILITY IMPROVEMENTS**

STA. TO STA.

| | | | |
|---|---|---|---|
| CONTRACT NO. - | TOTAL SHEETS 1434 | SHEET NO. 565 |
| PROJECT NO. B-7-203 | DRAWING NO. PS-22 | |
| SCALE: | | |

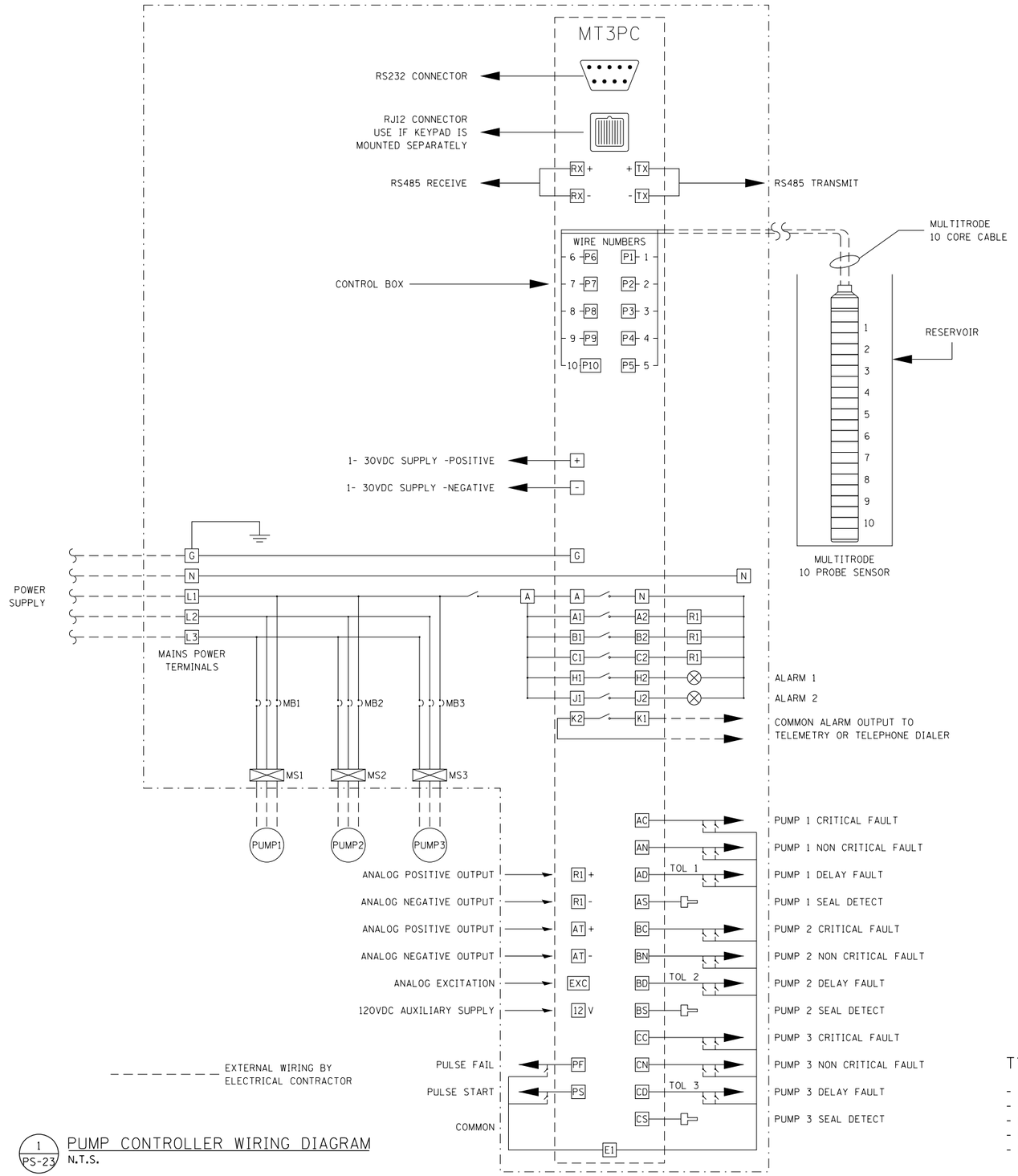


1 PS-23 PUMP CONTROLLER WIRING DIAGRAM
N.T.S.

## NOTES

1. THIS DRAWING IS ISSUED FOR GENERAL GUIDANCE AND REFERENCE ONLY.
2. COORDINATE AND VERIFY EXACT TERMINATION POINTS OF FIELD WIRING THROUGH CONTROLLER PANEL VENDOR.
3. ALL FIELD WIRING WILL BE DONE BY ELECTRICAL CONTRACTOR.
4. FOR CABLE SIZE AND CONDUITS REFER TO ELECTRICAL SHEETS.

## TYPICAL FAULT DEVICES

- THERMAL OVERLOAD
- THERMISTOR RELAYS
- FLOW SWITCHES
- UNDERVOLTAGE RELAYS
- PHASE MONITOR RELAYS ETC.

PLOT DATE: 5/17/2021
PLOT SCALE: 40.0000 ' / in.
FILE NAME: pw:\\CIVIL-PW-INT.civiltech.local:Civiltech Projects\Documents\Projects\3153\CAD\Sheets\D&U\Pump Station\sht-ps-024.dgn

| | | | | |
|---|---|---|---|---|
| DESIGN: MSA | | | | |
| DRAWN: MSA | | | | |
| CHECKED: TKL | | | | |
| APPROVED: | NO. | BY | DATE | DESCRIPTION |
| DATE: 01/22/2021 | REVISIONS | | | |

CDOT CHICAGO DEPARTMENT OF TRANSPORTATION

C*NECT

PUMP STATION
PUMP CONTROL SCHEMATIC

JACKSON PARK MOBILITY IMPROVEMENTS

STA. TO STA.

| | | |
|---|---|---|
| CONTRACT NO. - | TOTAL SHEETS 1434 | SHEET NO. 566 |
| PROJECT NO. B-7-203 | DRAWING NO. PS-23 | |
| SCALE: | | |

# SOIL EROSION AND SEDIMENT CONTROL NOTES

## EROSION CONTROL INSPECTION

1. ALL EROSION CONTROL MEASURES MUST BE INSPECTED WEEKLY AND AFTER EACH ½" RAIN EVENT.

## WINTER SHUT DOWN

1. THE CONDITION OF THE CONSTRUCTION SITE FOR WINTER SHUT DOWN SHALL BE ADDRESSED EARLY IN THE FALL GROWING SEASON SO THAT SLOPES AND OTHER BARE EARTH AREAS MAY BE STABILIZED WITH TEMPORARY AND/OR PERMANENT VEGETATIVE COVER FOR PROPER EROSION AND SEDIMENT CONTROL. ALL OPEN AREAS THAT ARE TO REMAIN IDLE THROUGHOUT THE WINTER SHALL RECEIVE TEMPORARY EROSION CONTROL MEASURES INCLUDING TEMPORARY SEEDING, MULCHING AND/OR EROSION CONTROL BLANKET PRIOR TO THE END OF THE FALL GROWING SEASON. THE AREAS TO BE WORKED BEYOND THE END OF THE GROWING SEASON MUST INCORPORATE SOIL STABILIZATION MEASURES THAT DO NOT RELY ON VEGETATIVE COVER SUCH AS EROSION CONTROL BLANKET AND HEAVY MULCHING.

## TEMPORARY DITCH FILTER

1. TEMPORARY DITCH FILTER WILL BE REQUIRED AT THOSE LOCATIONS WHERE THE CONTRACTOR'S OPERATIONS REQUIRE TEMPORARY OR PERMANENT WATER QUALITY TREATMENT. THE LOCATION OF TEMPORARY DITCH FILTERS ARE SHOWN ON THE PLANS. THE EXACT LOCATION MAY REQUIRE FIELD ADJUSTMENTS AND WILL BE COORDINATED IN THE FIELD WITH THE ENGINEER. THE QUANTITIES INCLUDE A PLAN ALLOWANCE OF TWO (2) ADDITIONAL TEMPORARY DITCH FILTERS FOR MAINTENANCE PURPOSES.

## DEWATERING

1. WHEN DEWATERING THE CONSTRUCTION AREA IS NECESSARY, ALL WATERS SHALL BE FILTERED BY USING FILTER BAGS OR AN ALTERNATIVE MEASURE APPROVED BY THE CITY. ALL FILTER BAGS MUST HAVE SECONDARY CONTAINMENT DEVICES, AND SHOULD BE PLACED ON LEVEL GROUND. WATER MUST HAVE SEDIMENT REMOVED BEFORE BEING ALLOWED TO RETURN TO THE ORIGINAL LAKE, CREEK AND/OR DITCH. THE DISCHARGE SHALL BE DESIGNED SO THAT RETURNING WATERS DO NOT CAUSE EROSION. THE CONTRACTOR SHALL COORDINATE THE METHOD, DESIGN, LOCATION, AND MAINTENANCE OF THE DEWATERING PLAN AND FILTER BAG(S) WITH THE ENGINEER AND THE CITY AT THE PRE-CONSTRUCTION MEETING. THE CONTRACTOR MUST ALSO SUBMIT A DEWATERING PLAN TO THE US ARMY CORPS OF ENGINEERS (USACE) AND THE WILL/SOUTH COOK SOIL AND WATER CONSERVATION DISTRICT FOR APPROVAL PRIOR TO ANY DEWATERING WORK.

   DEWATERING AND PUMPING FOR ALL CONSTRUCTION OPERATIONS WILL NOT BE MEASURED SEPARATELY FOR PAYMENT BUT SHALL BE INCLUDED IN THE COST OF THE RELATED ITEM OF WORK REQUIRING THE DEWATERING OPERATION. DEWATERING WILL INCLUDE MEANS, METHODS AND ALL MATERIALS AND EQUIPMENT TO DEWATER AND PROVIDE FILTRATION OF WATERS BEFORE RE-ENTERING THE DITCHES AND/OR CREEK.

## STABILIZED CONSTRUCTION AREA

1. TEMPORARY STABILIZATION OF THE CONSTRUCTION AREA SHALL TAKE PLACE AT THE END OF EACH WORK DAY. THIS SHALL INCLUDE REMOVAL OF ALL EQUIPMENT AND HAZARDOUS MATERIAL WITHIN THE CHANNEL.

2. PERMANENT STABILIZATION OF THE CONSTRUCTION AREA SHALL BE COMPLETED AT THE END OF EACH MAJOR STAGE OF WORK.

## PERMIT

1. THIS PROJECT REQUIRES A U.S. ARMY CORPS OF ENGINEERS (USACE) 404 PERMIT THAT HAS BEEN SECURED BY THE CITY. AS A CONDITION OF THIS PERMIT THE CONTRACTOR WILL NEED TO SUBMIT AN IN-STREAM WORK PLAN TO THE WILL/SOUTH COOK SOIL AND WATER CONSERVATION DISTRICT (SWCD) FOR APPROVAL. GUIDELINES ON ACCEPTABLE IN-STREAM WORK TECHNIQUES CAN BE FOUND ON THE USACE WEBSITE.

## WORK IN WATERWAY

1. NO WORK SHALL BE PERFORMED IN FLOWING WATER. WORK IN AND NEAR THE CRITICAL AREAS SHALL BE ISOLATED FROM CONCENTRATED FLOWS OR STREAM FLOW. ONCE WORK IN THIS AREA BEGINS, PRIORITY SHALL BE GIVEN TO THE COMPLETION OF THE WORK AND FINAL STABILIZATION OF ALL DISTURBED AREAS. THE CONTRACTOR SHALL BE RESPONSIBLE FOR DIVERTING OR BYPASSING FLOWS AWAY FROM CONSTRUCTION AREAS. THE METHOD OF DEWATERING OR BYPASS SHALL BE PRESENTED TO THE RESIDENT ENGINEER AT THE PRECONSTRUCTION MEETING. THE SYSTEM SHALL BE DESIGNED TO CONVEY THE ANTICIPATED BASE FLOW OF THE CHANNEL DURING CONSTRUCTION. THE SYSTEM SHALL ALSO BE DESIGNED SO THAT LARGER DISCHARGES FROM STORM EVENTS CAN PASS DOWNSTREAM WITHOUT CREATING SOIL EROSION AND WATER QUALITY ISSUES. THE CONTRACTOR MUST ALSO SUBMIT AN IN-STREAM WORK PLAN TO THE US ARMY CORPS OF ENGINEERS (USACE) AND THE WILL/SOUTH COOK SOIL AND WATER CONSERVATION DISTRICT FOR APPROVAL PRIOR TO ANY IN-STREAM WORK.

2. WORK IN THE WATERWAY SHALL BE TIMED TO TAKE PLACE DURING LOW OR NO-FLOW CONDITIONS.

3. THE WORK SHALL BE PERFORMED IN A MANNER THAT SHALL NOT ALLOW A VIOLATION OF FEDERAL, STATE OR LOCAL WATER QUALITY STANDARDS.

4. ALL SYSTEMS TO DIVERT WATER AWAY FROM WORK AREAS SHALL BE INSTALLED PRIOR TO THE START OF WORK. WATER SHALL BE DIVERTED OR BYPASS PUMPED SO THAT FLOWING WATER IS NOT WITHIN EXCAVATION AREAS.

5. EXCAVATED AREAS SHALL BE STABILIZED AS SOON AS POSSIBLE AFTER THE WORK HAS BEEN COMPLETED.

## GENERAL NOTES

1. PRIOR TO COMMENCING LAND-DISTURBING ACTIVITIES IN AREAS OTHER THAN INDICATED ON THESE PLANS (INCLUDING BUT NOT LIMITED TO, ADDITIONAL PHASES OF DEVELOPMENT AND OFF-SITE BORROW OR WASTE AREAS), A SUPPLEMENTARY EROSION CONTROL PLAN SHALL BE SUBMITTED TO THE ENGINEER FOR REVIEW.

2. THE CONTRACTOR IS RESPONSIBLE FOR INSTALLATION OF ANY ADDITIONAL EROSION CONTROL MEASURES NECESSARY TO PREVENT EROSION AND SEDIMENTATION AS DETERMINED BY THE ENGINEER.

3. WHERE WORK IS COMPLETE, PERMANENT STABILIZATION SHALL OCCUR WITHIN SEVEN (7) DAYS OF COMPLETION. WHERE WORK HAS TEMPORARILY CEASED FOR FOURTEEN (14) DAYS OR MORE, TEMPORARY STABILIZATION SHALL OCCUR BY THE SEVENTH DAY AFTER WORK HAS CEASED.

4. ALL ADJACENT STREETS AND PARKING LOTS MUST BE KEPT CLEAR OF DEBRIS, INSPECTED DAILY, AND CLEANED WHEN NECESSARY.

5. THE CONTRACTOR SHALL BE RESPONSIBLE FOR COMPLIANCE WITH ALL GENERAL AND SPECIAL REQUIREMENTS, CONDITIONS AND PROVISIONS FOR ALL APPLICABLE LOCAL, STATE, AND FEDERAL PERMITS ISSUED FOR THIS PROJECT.

## WILL/SOUTH COOK SOIL AND WATER CONSERVATION DISTRICT

1. UNLESS OTHERWISE INDICATED, ALL VEGETATIVE AND STRUCTURAL EROSION AND SEDIMENT CONTROL PRACTICES WILL BE CONSTRUCTED ACCORDING TO MINIMUM STANDARDS AND SPECIFICATIONS IN THE ILLINOIS URBAN MANUAL, LATEST EDITION.

2. THE WILL/SOUTH COOK SOIL AND WATER CONSERVATION DISTRICT (WSCSWCD) MUST BE NOTIFIED ONE WEEK PRIOR TO THE PRE-CONSTRUCTION MEETING, ONE WEEK PRIOR TO THE COMMENCEMENT OF LAND-DISTURBING ACTIVITIES, AND ONE WEEK PRIOR TO THE FINAL INSPECTION.

3. A COPY OF THE APPROVED EROSION AND SEDIMENT CONTROL PLAN SHALL BE MAINTAINED ON THE SITE AT ALL TIMES.

4. PRIOR TO COMMENCING LAND-DISTURBING ACTIVITIES IN AREAS OTHER THAN INDICATED ON THESE PLANS, A SUPPLEMENTARY EROSION CONTROL PLAN SHALL BE SUBMITTED FOR REVIEW BY THE WSCSWCD.

5. THE CONTRACTOR IS RESPONSIBLE FOR INSTALLATION OF ANY ADDITIONAL EROSION CONTROL MEASURES NECESSARY TO PREVENT EROSION AND SEDIMENTATION AS DETERMINED BY THE WSCSWCD.

6. DURING DEWATERING OPERATIONS, WATER WILL BE FILTERED, OR PUMPED INTO SEDIMENT BASINS OR SILT TRAPS. DEWATERING DIRECTLY INTO STREAMS, WETLANDS, FIELD TILES, OR STORMWATER STRUCTURES IS PROHIBITED.

7. IT IS THE RESPONSIBILITY OF THE LANDOWNER/GENERAL CONTRACTOR TO INFORM ANY SUB-CONTRACTOR(S) WHO MAY PERFORM WORK ON THIS SITE/PROJECT OF THE REQUIREMENTS IN IMPLEMENTING AND MAINTAINING THESE EROSION CONTROL PLANS AND ASSURE COMPLIANCE WITH ALL APPLICABLE LOCAL, STATE, AND FEDERAL REGULATIONS.

## TYPICAL CONSTRUCTION SEQUENCE NOTES

1. INSTALL TEMPORARY EROSION CONTROL MEASURES, DEWATERING MEASURES, AND TEMPORARY DIVERSION MEASURES.

2. REMOVE EXISTING STORM SEWERS AND CULVERTS. THE CONTRACTOR SHALL PERFORM DAILY INSPECTIONS OF IN-WATER WORK TO MONITOR SEDIMENT CONTROL MEASURES.

3. INSTALL CULVERT AND STORM SEWER.

4. INSTALL PERMANENT STABILIZATION MEASURES - STONE RIPRAP AND SEEDING.

   (THE CONTRACTOR SHALL MONITOR EROSION CONTROL MEASURES THOUGHOUT CONSTRUCTION.)

## MAINTENANCE PLAN

1. GENERAL
   REGULAR INSPECTIONS AND ROUTINE MAINTENANCE OF GENERAL AREAS SHALL BE PERFORMED ON A MONTHLY OR AS-NEEDED BASIS. SPECIFIC ITEMS OF CONCERN INCLUDE:
   - LITTER AND DEBRIS SHALL BE CONTROLLED.
   - LANDSCAPED AREAS SHALL BE MAINTAINED WITH REGULAR MOWING AND RESTORED WITH APPROPRIATE SEEDING/VEGETAION AS NECESSARY.
   - ACCUMULATED SEDIMENT SHALL BE DISPOSED OF PROPERLY, ALONG WITH ANY WASTES GENERATED DURING MAINTENANCE OPERATIONS.
   - RIPRAP AREAS SHALL BE REPAIRED WITH THE ADDITION OF NEW RIPRAP, AS NECESSARY, OF SIMILAR SIZE AND SHAPE.
   - ROADS SHALL BE SWEPT, VACUUMED AND/OR WASHED ON A REGULAR BASIS.

2. VEGETATED AREAS
   - NEED FOR PLANTING, RESEEDING, OR SODDING. SUPPLEMENT ALTERNATIVE NATIVE VEGETATION IF A SIGNIFIVANT PORTION HAS NOT ESTABLISHED (50% OF THE SURFACE AREA AFTER SECOND GROWING SEASON). RESEED WITH ALRERNATIVE NATIVE GRASS SPECIES IF ORIGINAL GRASS COVER HAS NOT SUCCESSFULLY ESTABLISHED.
   - EVIDENCE OF GRAZING, MOTORBIKES, OR OTHER VEHICLES, REPAIR.
   - CHECK FOR INVASIVE VEGETATION, REMOVE WHEN POSSIBLE.
   - REGULAR MOWING TO CONTROL VEGETATION; IT IS RECOMMENDED THAT NATIVE VEGETATION REMAIN UNCUT.
   - DEAD OR DAMAGED NON-NATIVE GRASSY AREAS - REPAIR WITH SEEDING WITH FERTILIZATION OR SEEDING WITH MULCH.
   - COMPENSATORY STORAGE AREA SHALL BE RESEEDED WITH APPROPRIATE VEGETATION ACCORDING TO THE APPROVED PLANTING PLAN.

## TEMPORARY CONCRETE WASHOUT FACILITY

1. TEMPORARY CONCRETE WASHOUT FACILITY FINAL LOCATION TO BE DETERMINED BY THE CONTRACTOR AND APPROVED BY THE ENGINEER PRIOR TO CONCRETE POURS. THE CONCRETE WASHOUT WILL BE CONSTRUCTED ACCORDING TO THE MINIMUM STANDARDS AND SPECIFICATIONS IN THE ILLINOIS URBAN MANUAL, LATEST EDITION.

## STABILZED CONSTRUCTION ENTRANCE

1. THE STABILIZED CONSTRUCTION ENTRANCE FINAL LOCATION TO BE DETERMINED BY THE CONTRACTOR AND APPROVED BY THE ENGINEER. THE STABILIZED CONSTRUCTION ENTRANCE WILL BE CONSTRUCTED ACCORDING TO THE MINIMUM STANDARDS AND SPECIFICATIONS IN THE ILLINOIS URBAN MANUAL, LATEST EDITION.

## STOCKPILING

1. IF STOCKPILING IS REQUIRED, THE LOCATION, DETERMINED BY THE CONTRACTOR, MUST BE APPROVED BY THE ENGINEER. APPROPRIATE TEMPORARY EROSION CONTROL MEASURES MUST BE IN PLACE.

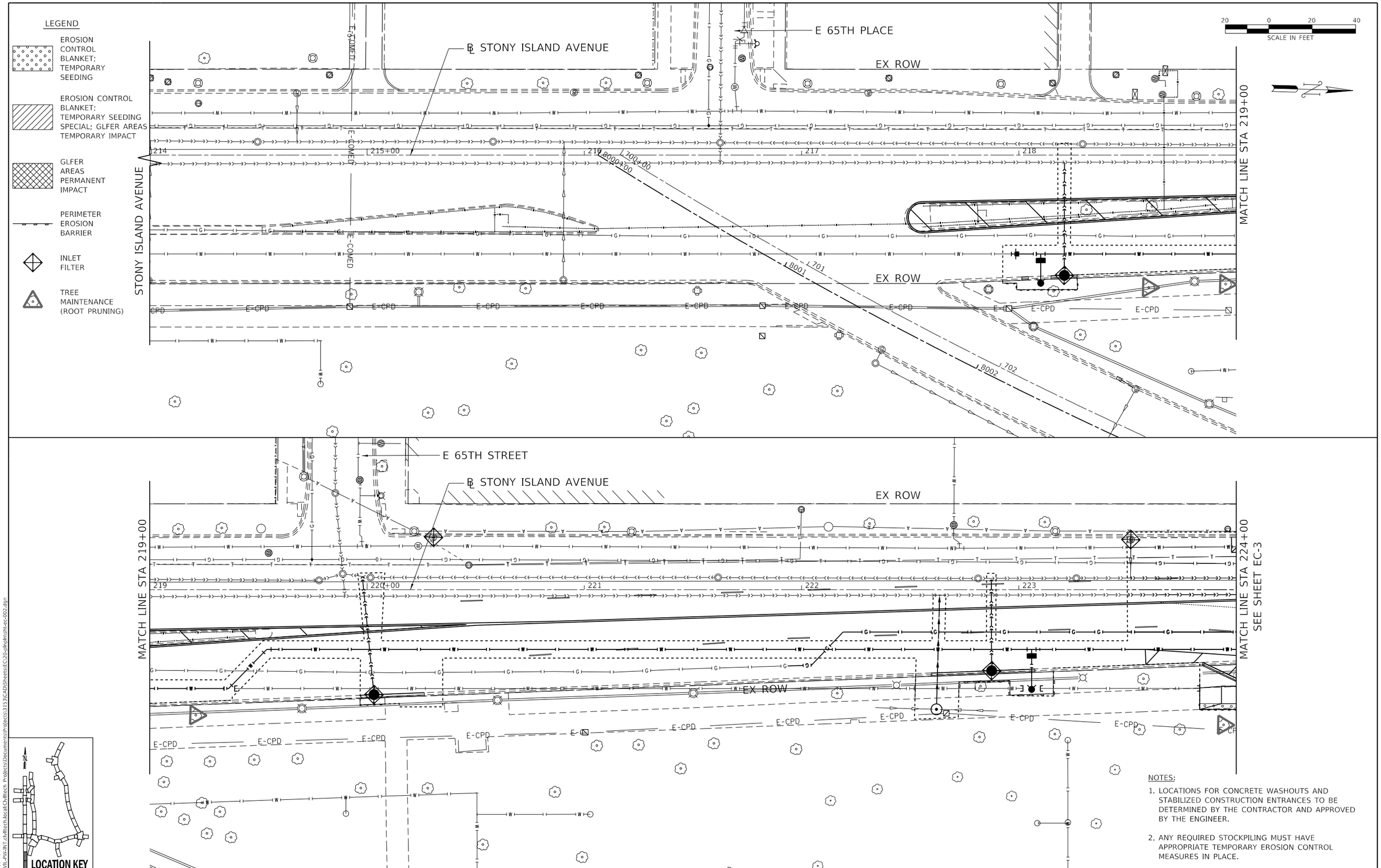


NOTES:

1. LOCATIONS FOR CONCRETE WASHOUTS AND STABILIZED CONSTRUCTION ENTRANCES TO BE DETERMINED BY THE CONTRACTOR AND APPROVED BY THE ENGINEER.
2. ANY REQUIRED STOCKPILING MUST HAVE APPROPRIATE TEMPORARY EROSION CONTROL MEASURES IN PLACE.

| | | | | |
|---|---|---|---|---|
| DESIGN: MSA | | | SREV3 | |
| DRAWN: MSA | | | SREV2 | |
| CHECKED: TKL | | | SREV1 | |
| APPROVED: | NO. | BY | DATE | DESCRIPTION |
| DATE: 01/22/2021 | REVISIONS | | | |

CDOT CHICAGO DEPARTMENT OF TRANSPORTATION

C*NECT

EROSION CONTROL PLAN
S. STONY ISLAND AVE.

JACKSON PARK MOBILITY IMPROVEMENTS

STA. 214+00 TO STA. 224+00

CONTRACT NO. -
PROJECT NO. B-7-203
SCALE: 1"=20'

TOTAL SHEETS 1434
SHEET NO. 568
DRAWING NO. EC-2

PLOT DATE: 5/17/2021
PLOT SCALE: 40.0000 ' / in.
FILE NAME: pw:\\CIVIL-PW-INT.civiltech.local:Civiltech Projects\Documents\Projects\3153\CAD\Sheets\EC\20-plnpln\sht-ec-002.dgn

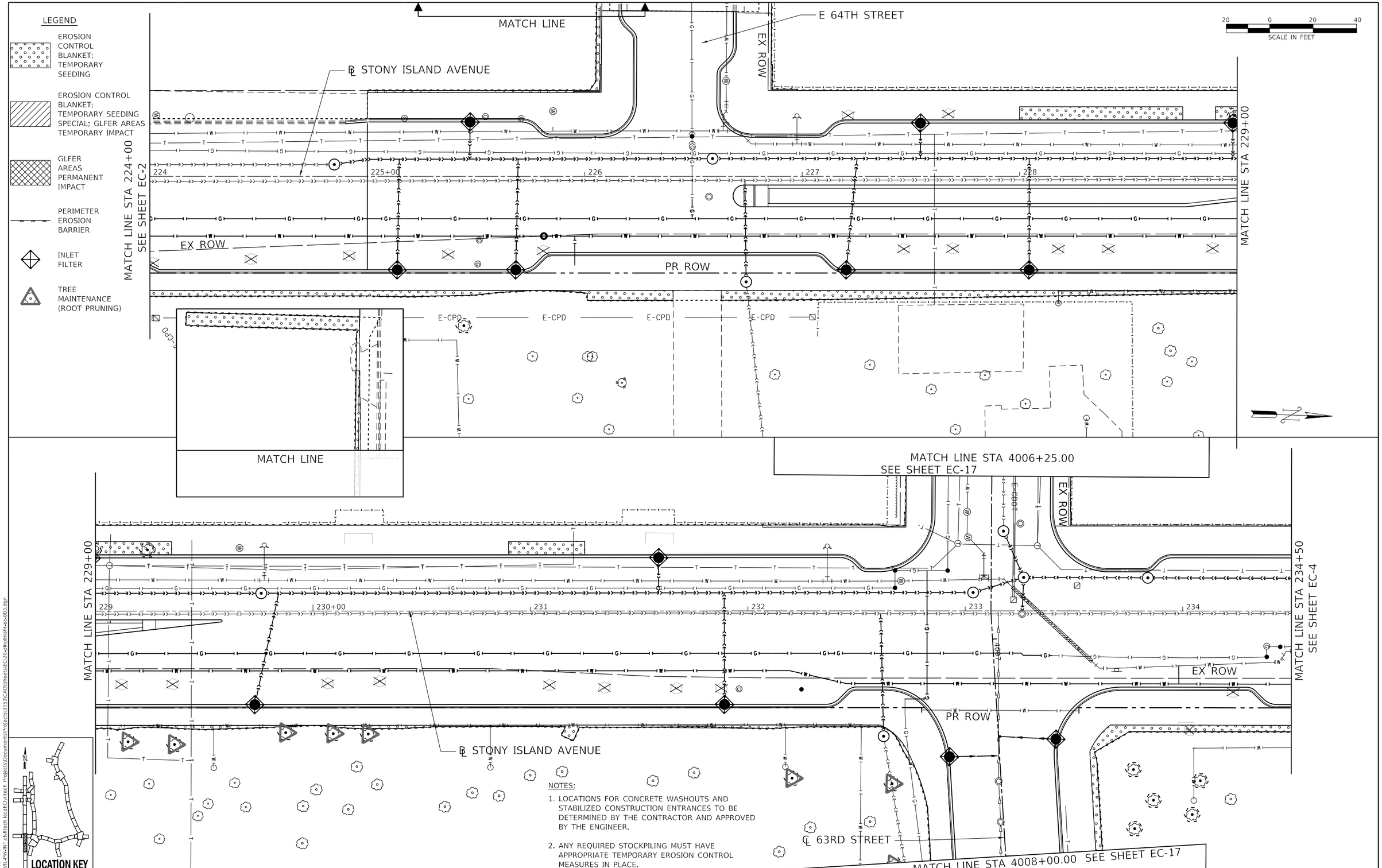


NOTES:

1. LOCATIONS FOR CONCRETE WASHOUTS AND STABILIZED CONSTRUCTION ENTRANCES TO BE DETERMINED BY THE CONTRACTOR AND APPROVED BY THE ENGINEER.
2. ANY REQUIRED STOCKPILING MUST HAVE APPROPRIATE TEMPORARY EROSION CONTROL MEASURES IN PLACE.

| | | | | |
|---|---|---|---|---|
| DESIGN: MSA | | | SREV3 | |
| DRAWN: MSA | | | SREV2 | |
| CHECKED: TKL | | | SREV1 | |
| APPROVED: | NO. | BY | DATE | DESCRIPTION |
| DATE: 01/22/2021 | REVISIONS | | | |

CDOT CHICAGO DEPARTMENT OF TRANSPORTATION

C*NECT

EROSION CONTROL PLAN
S. STONY ISLAND AVE.

JACKSON PARK MOBILITY IMPROVEMENTS

STA. 224+00 TO STA. 234+50

| | | |
|---|---|---|
| CONTRACT NO. - | TOTAL SHEETS 1434 | SHEET NO. 569 |
| PROJECT NO. B-7-203 | DRAWING NO. EC-3 | |
| SCALE: 1"=20' | | |

PLOT DATE: 5/17/2021
PLOT SCALE: 40.0000 ' / in.
FILE NAME: pw:\\CIVIL-PW-INT.civiltech.local:Civiltech Projects\Documents\Projects\3153\CAD\Sheets\EC\20-plnplnsht-ec-003.dgn

LEGEND

- EROSION CONTROL BLANKET; TEMPORARY SEEDING
- EROSION CONTROL BLANKET; TEMPORARY SEEDING SPECIAL; GLFER AREAS TEMPORARY IMPACT
- GLFER AREAS PERMANENT IMPACT
- PERIMETER EROSION BARRIER
- INLET FILTER
- TREE MAINTENANCE (ROOT PRUNING)

20 0 20 40
SCALE IN FEET

MATCH LINE STA 234+50
SEE SHEET EC-3

EX ROW

235+00 236 237 238 239

EX ROW

PR ROW

℄ STONY ISLAND AVENUE

MATCH LINE STA 240+00

E-CDOT

E 62ND STREET

61ST STREET

EX ROW

℄ STONY ISLAND AVENUE

MATCH LINE STA 240+00

240+00 241 242 243 244 245+00

MATCH LINE STA 245+50
SEE SHEET EC-5

EX ROW

PR ROW

OPC SITE BOUNDARY

OPC SITE BOUNDARY

LOCATION KEY

NOTES:

1. LOCATIONS FOR CONCRETE WASHOUTS AND STABILIZED CONSTRUCTION ENTRANCES TO BE DETERMINED BY THE CONTRACTOR AND APPROVED BY THE ENGINEER.
2. ANY REQUIRED STOCKPILING MUST HAVE APPROPRIATE TEMPORARY EROSION CONTROL MEASURES IN PLACE.

| | | | | | |
|---|---|---|---|---|---|
| DESIGN: | MSA | | | $REV3 | |
| DRAWN: | MSA | | | $REV2 | |
| CHECKED: | TKL | | | $REV1 | |
| APPROVED: | | NO. | BY | DATE | DESCRIPTION |
| DATE: 03/29/2021 | | REVISIONS | | | |

CDOT CHICAGO DEPARTMENT OF TRANSPORTATION

C*NECT

**EROSION CONTROL PLAN**
**S. STONY ISLAND AVE.**

**JACKSON PARK MOBILITY IMPROVEMENTS**

STA. 234+50 TO STA. 245+50

| | | | |
|---|---|---|---|
| CONTRACT NO. - | | TOTAL SHEETS | SHEET NO. |
| PROJECT NO. B-7-203 | | 1434 | 570 |
| SCALE: 1"=20' | | DRAWING NO. EC-4 | |

PLOT DATE: 5/17/2021
PLOT SCALE: 40.0000 ' / in.
FILE NAME: pw:\\CIVIL-PW-INT.civiltech.local\CivilTech Projects\Documents\Projects\3153\CADD\Sheets\EC\20-plnpln\sht-ec-004.dgn

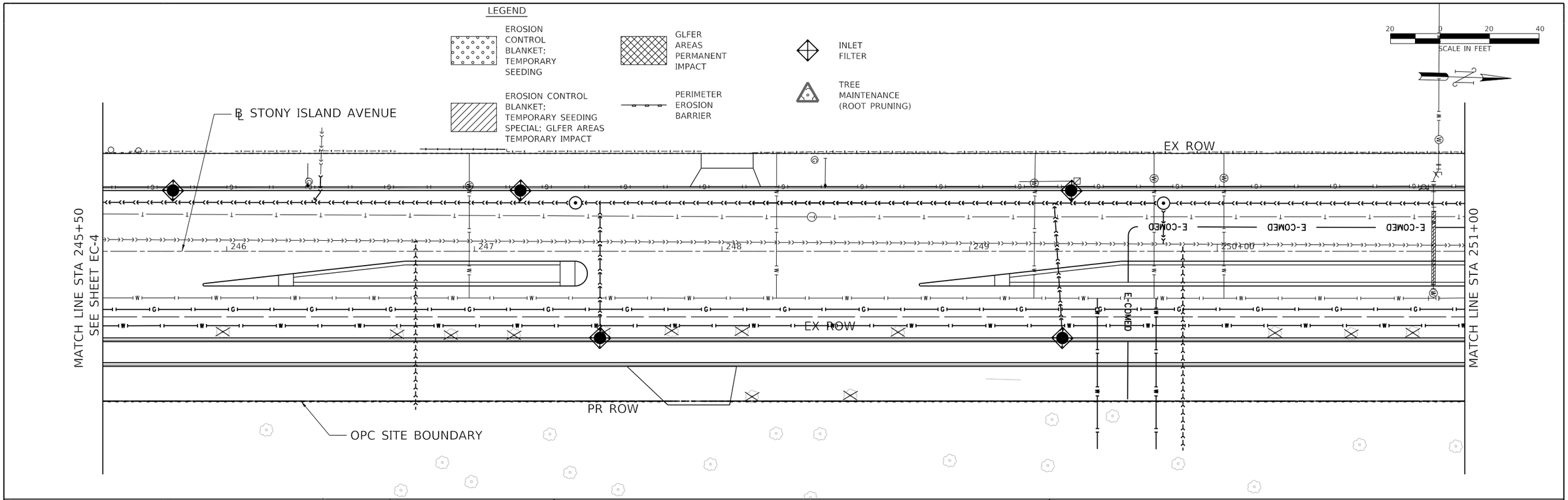


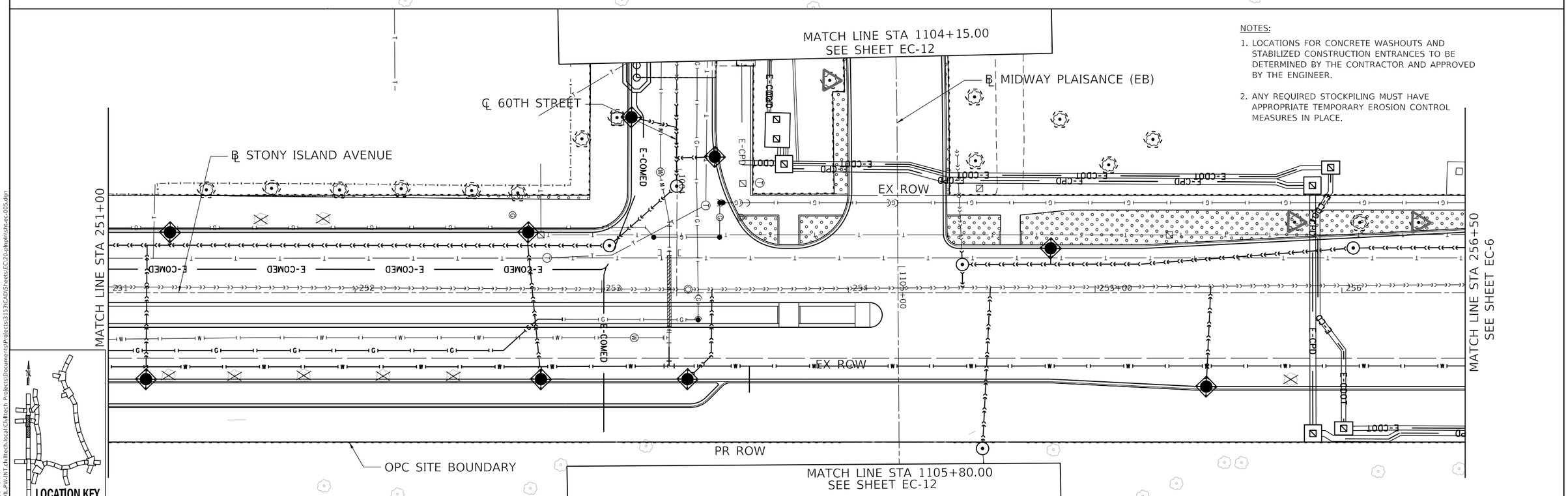


NOTES:

1. LOCATIONS FOR CONCRETE WASHOUTS AND STABILIZED CONSTRUCTION ENTRANCES TO BE DETERMINED BY THE CONTRACTOR AND APPROVED BY THE ENGINEER.
2. ANY REQUIRED STOCKPILING MUST HAVE APPROPRIATE TEMPORARY EROSION CONTROL MEASURES IN PLACE.

PLOT DATE: 5/17/2021
PLOT SCALE: 40.0000 ' / in.
FILE NAME: pw:\\CIVIL-PW-INT.civiltech.local:Civiltech Projects\Documents\Projects\3153\CAD\Sheets\EC\20-plnplnsht-ec-005.dgn

| | | | | | |
|---|---|---|---|---|---|
| DESIGN: | MSA | | | $REV3 | |
| DRAWN: | MSA | | | $REV2 | |
| CHECKED: | TKL | | | $REV1 | |
| APPROVED: | | NO. | BY | DATE | DESCRIPTION |
| DATE: 03/29/2021 | | REVISIONS | | | |

CDOT CHICAGO DEPARTMENT OF TRANSPORTATION

C*NECT

EROSION CONTROL PLAN
S. STONY ISLAND AVE.

JACKSON PARK MOBILITY IMPROVEMENTS

STA. 245+50 TO STA. 256+50

| | | |
|---|---|---|
| CONTRACT NO. - | TOTAL SHEETS 1434 | SHEET NO. 571 |
| PROJECT NO. B-7-203 | DRAWING NO. EC-5 | |
| SCALE: 1"=20' | | |

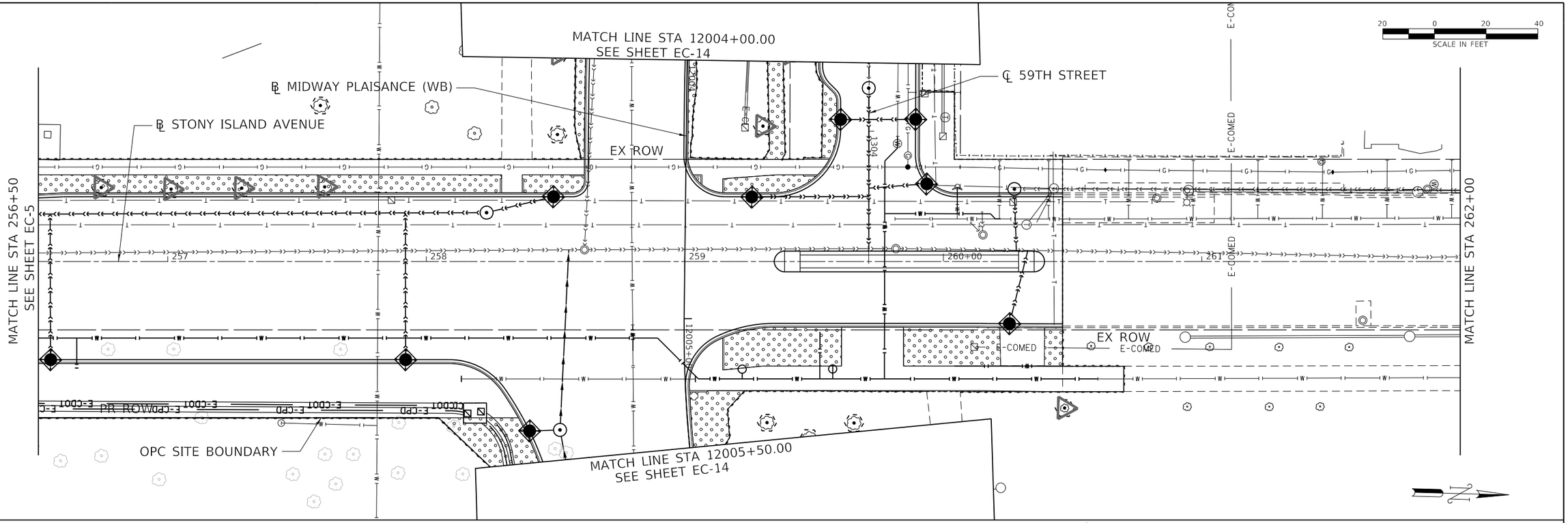


LEGEND

- EROSION CONTROL BLANKET; TEMPORARY SEEDING
- GLFER AREAS PERMANENT IMPACT
- INLET FILTER
- EROSION CONTROL BLANKET; TEMPORARY SEEDING SPECIAL; GLFER AREAS TEMPORARY IMPACT
- PERIMETER EROSION BARRIER
- TREE MAINTENANCE (ROOT PRUNING)

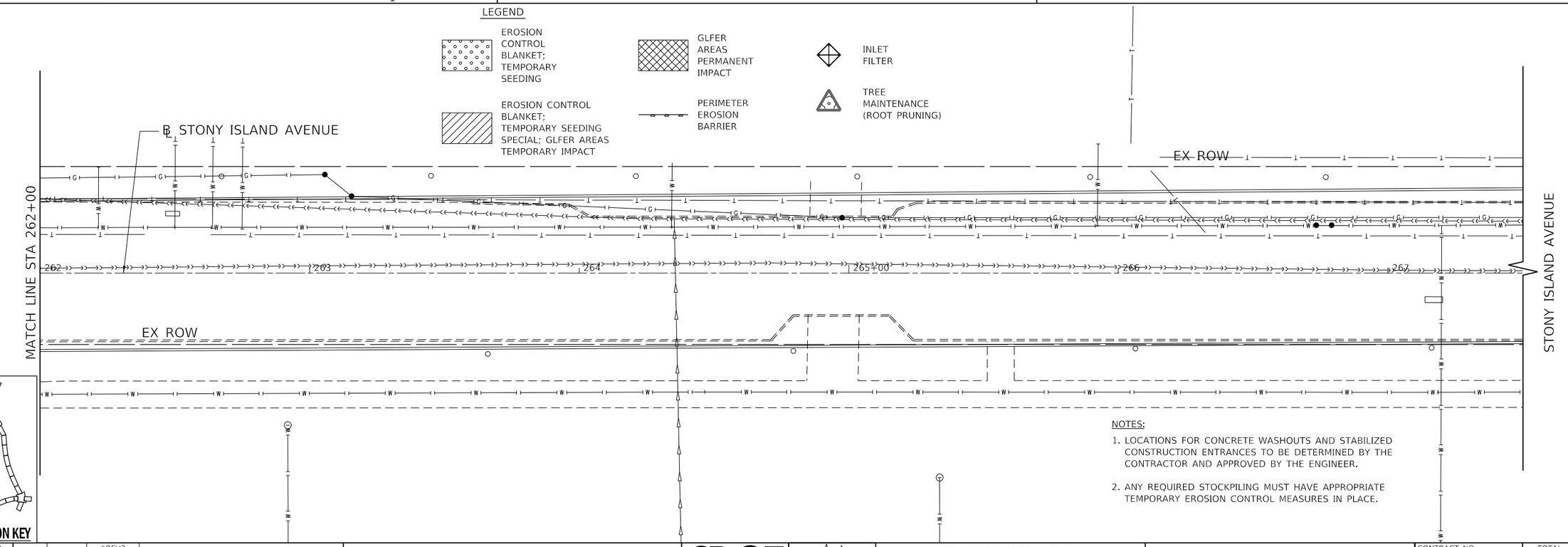


NOTES:

1. LOCATIONS FOR CONCRETE WASHOUTS AND STABILIZED CONSTRUCTION ENTRANCES TO BE DETERMINED BY THE CONTRACTOR AND APPROVED BY THE ENGINEER.
2. ANY REQUIRED STOCKPILING MUST HAVE APPROPRIATE TEMPORARY EROSION CONTROL MEASURES IN PLACE.

LOCATION KEY

| | | | | |
|---|---|---|---|---|
| DESIGN: MSA | | | SREV3 | |
| DRAWN: MSA | | | SREV2 | |
| CHECKED: TKL | | | SREV1 | |
| APPROVED: | NO. | BY | DATE | DESCRIPTION |
| DATE: 01/22/2021 | REVISIONS | | | |

CDOT CHICAGO DEPARTMENT OF TRANSPORTATION

C*NECT

**EROSION CONTROL PLAN**
**S. STONY ISLAND AVE.**

**JACKSON PARK MOBILITY IMPROVEMENTS**

STA. 256+50 TO STA. 267+50

| | |
|---|---|
| CONTRACT NO. - | TOTAL SHEETS 1434 |
| PROJECT NO. B-7-203 | SHEET NO. 572 |
| SCALE: 1"=20' | DRAWING NO. EC-6 |

PLOT DATE: 5/17/2021
PLOT SCALE: 40.0000 ' / in.
FILE NAME: pw:\\CIVIL-PW-INT.cl.dl\Tech.local\CivilTech Projects\Documents\P-0\Sects\3153\CADDSheets\EC\20-IHoNsht-ec-006.dgn

LEGEND

- EROSION CONTROL BLANKET; TEMPORARY SEEDING
- EROSION CONTROL BLANKET; TEMPORARY SEEDING SPECIAL; GLFER AREAS TEMPORARY IMPACT
- GLFER AREAS PERMANENT IMPACT
- PERIMETER EROSION BARRIER
- INLET FILTER
- TREE MAINTENANCE (ROOT PRUNING)

20 0 20 40
SCALE IN FEET

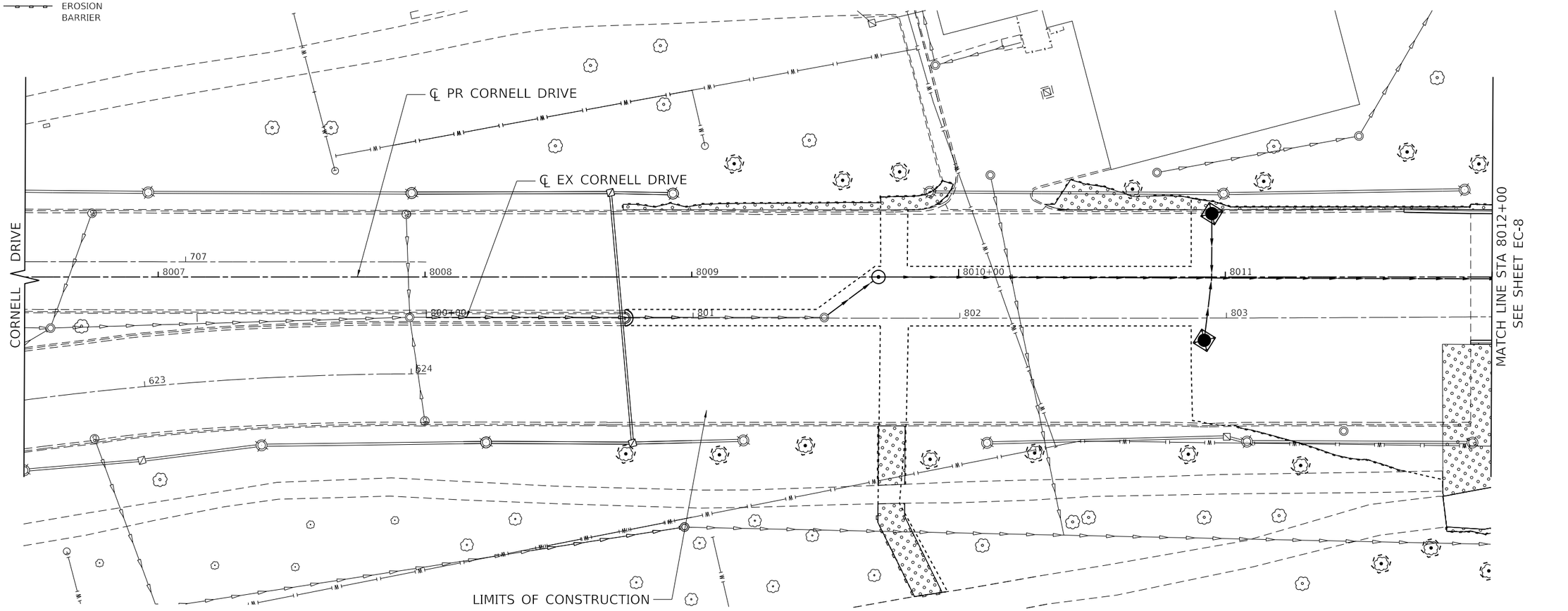


NOTES:

1. LOCATIONS FOR CONCRETE WASHOUTS AND STABILIZED CONSTRUCTION ENTRANCES TO BE DETERMINED BY THE CONTRACTOR AND APPROVED BY THE ENGINEER.
2. ANY REQUIRED STOCKPILING MUST HAVE APPROPRIATE TEMPORARY EROSION CONTROL MEASURES IN PLACE.

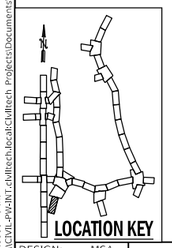


LOCATION KEY

PLOT DATE: 5/17/2021
PLOT SCALE: 40.0000 ' / in.
FILE NAME: pw:\\CIVIL-PW-INT.civiltech.local:Civiltech Projects\Documents\Projects\3153\CAD\Sheets\EC\20-plnplnsht-ec-007.dgn

| | | | | |
|---|---|---|---|---|
| DESIGN: MSA | | | | |
| DRAWN: MSA | | | | |
| CHECKED: TKL | | | | |
| APPROVED: | NO. | BY | DATE | DESCRIPTION |
| DATE: 01/22/2021 | REVISIONS | | | |

CDOT CHICAGO DEPARTMENT OF TRANSPORTATION

C*NECT

EROSION CONTROL PLAN
S. CORNELL DR.

JACKSON PARK MOBILITY IMPROVEMENTS

STA. 8006+50 TO STA. 8012+00

| | | |
|---|---|---|
| CONTRACT NO. - | TOTAL SHEETS 1434 | SHEET NO. 573 |
| PROJECT NO. B-7-203 | DRAWING NO. EC-7 | |
| SCALE: 1"=20' | | |

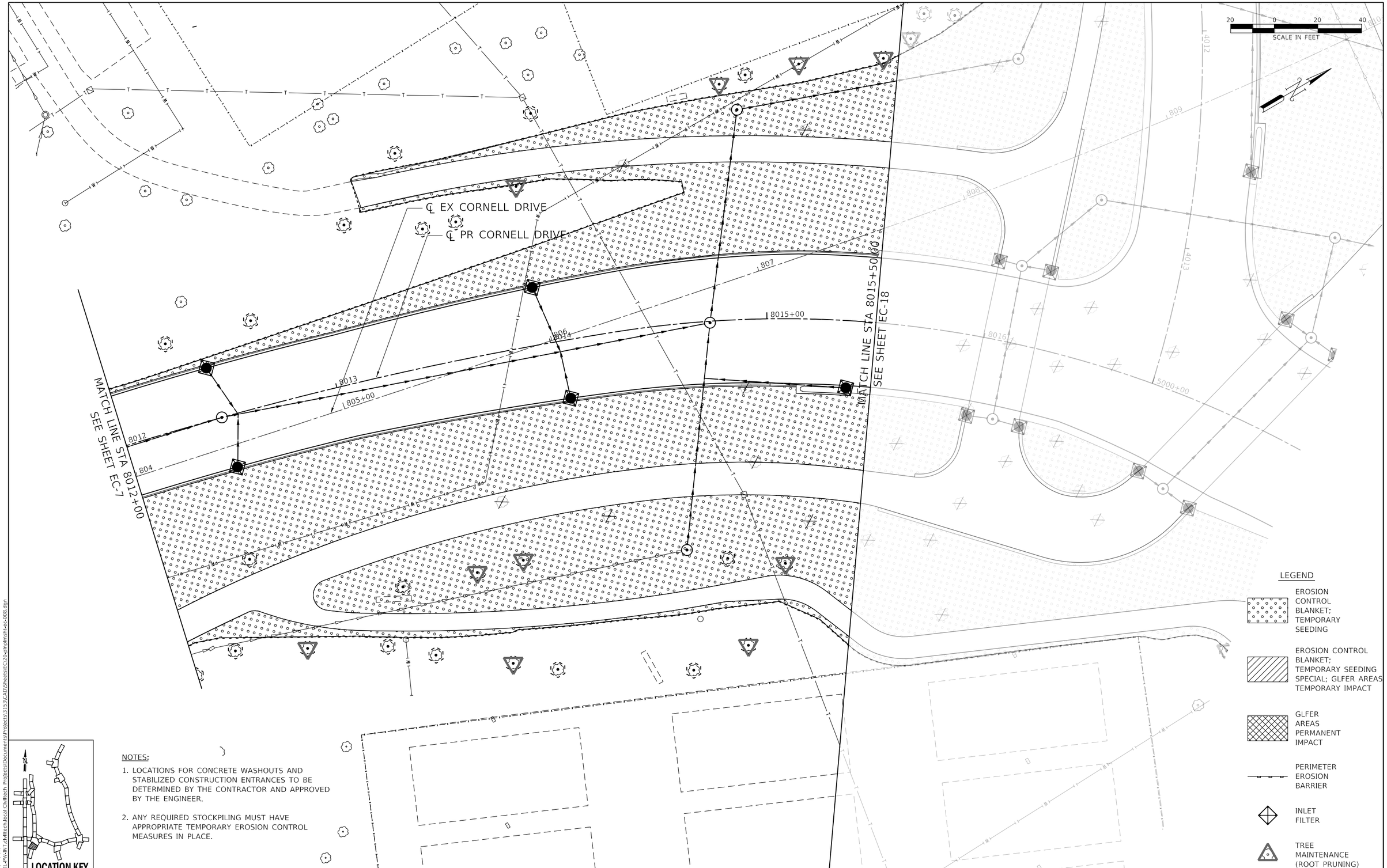


NOTES:

1. LOCATIONS FOR CONCRETE WASHOUTS AND STABILIZED CONSTRUCTION ENTRANCES TO BE DETERMINED BY THE CONTRACTOR AND APPROVED BY THE ENGINEER.
2. ANY REQUIRED STOCKPILING MUST HAVE APPROPRIATE TEMPORARY EROSION CONTROL MEASURES IN PLACE.

PLOT DATE: 5/17/2021
PLOT SCALE: 40.0000 ' / in.
FILE NAME: pw:\\CIVIL-PW-INT.civiltech.local:Civiltech Projects\Documents\Projects\3153\CAD\Sheets\EC\20-plnplnsht-ec-008.dgn

| | | | | |
|---|---|---|---|---|
| DESIGN: MSA | | | | |
| DRAWN: MSA | | | | |
| CHECKED: TKL | | | | |
| APPROVED: | NO. | BY | DATE | DESCRIPTION |
| DATE: 01/22/2021 | REVISIONS | | | |

CDOT CHICAGO DEPARTMENT OF TRANSPORTATION

C*NECT

EROSION CONTROL PLAN
S. CORNELL DR.

JACKSON PARK MOBILITY IMPROVEMENTS

STA. 8012+00 TO STA. 8015+00

| | | |
|---|---|---|
| CONTRACT NO. - | TOTAL SHEETS 1434 | SHEET NO. 574 |
| PROJECT NO. B-7-203 | DRAWING NO. EC-8 | |
| SCALE: 1"=20' | | |

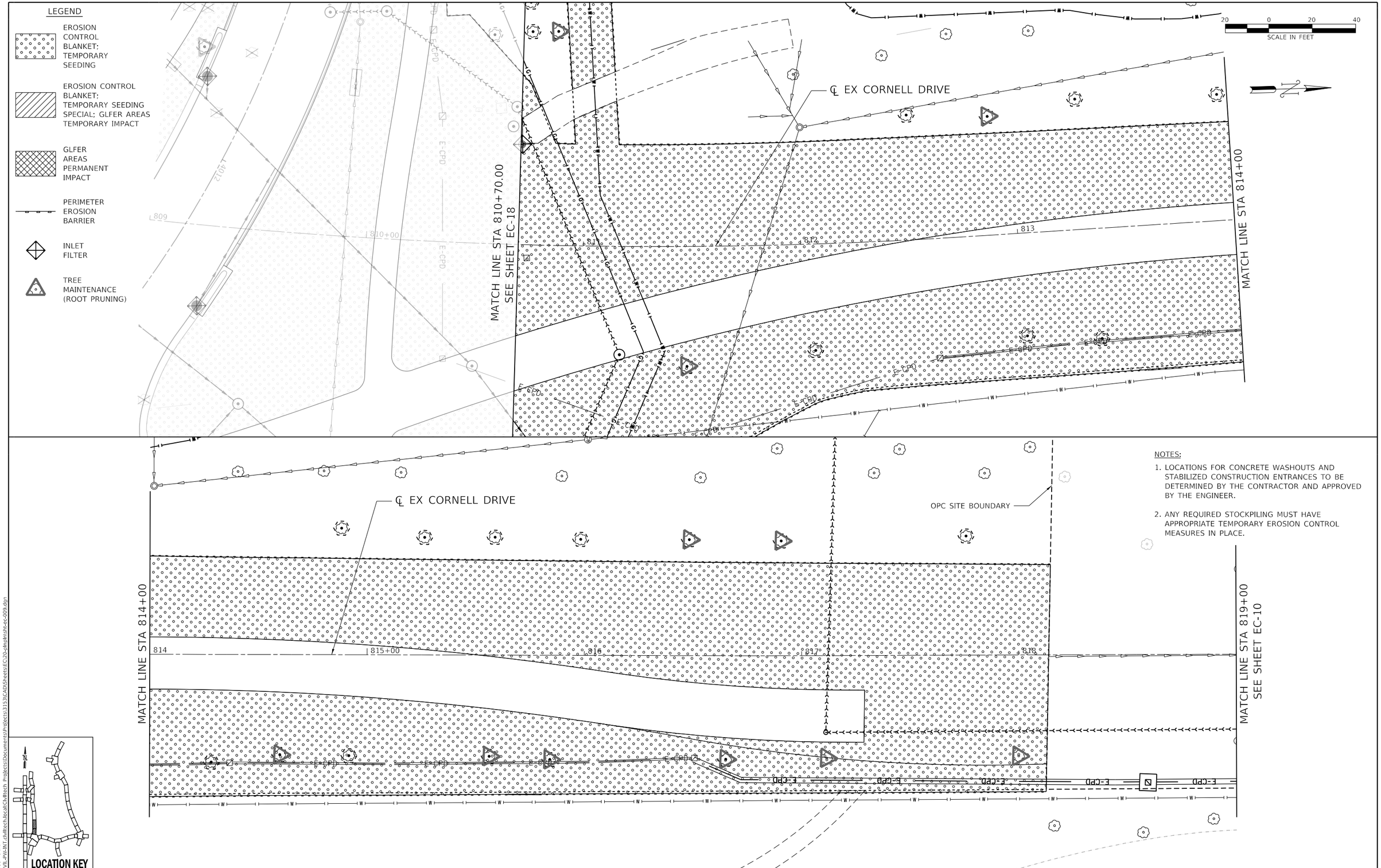


NOTES:

1. LOCATIONS FOR CONCRETE WASHOUTS AND STABILIZED CONSTRUCTION ENTRANCES TO BE DETERMINED BY THE CONTRACTOR AND APPROVED BY THE ENGINEER.
2. ANY REQUIRED STOCKPILING MUST HAVE APPROPRIATE TEMPORARY EROSION CONTROL MEASURES IN PLACE.

| | | | | |
|---|---|---|---|---|
| DESIGN: MSA | | | $REV3 | |
| DRAWN: MSA | | | $REV2 | |
| CHECKED: TKL | | | $REV1 | |
| APPROVED: | NO. | BY | DATE | DESCRIPTION |
| DATE: 01/22/2021 | REVISIONS | | | |

CDOT CHICAGO DEPARTMENT OF TRANSPORTATION

C*NECT

EROSION CONTROL PLAN
S. CORNELL DR.

JACKSON PARK MOBILITY IMPROVEMENTS

STA. 810+70 TO STA. 819+00

| | | |
|---|---|---|
| CONTRACT NO. - | TOTAL SHEETS 1434 | SHEET NO. 575 |
| PROJECT NO. B-7-203 | DRAWING NO. EC-9 | |
| SCALE: 1"=20' | | |

PLOT DATE: 5/17/2021
PLOT SCALE: 40.0000 ' / in.
FILE NAME: pw:\\CIVIL-PW-INT.civiltech.local:Civiltech Projects\Documents\Projects\3153\CAD\Sheets\EC\20-plnplnsht-ec-009.dgn

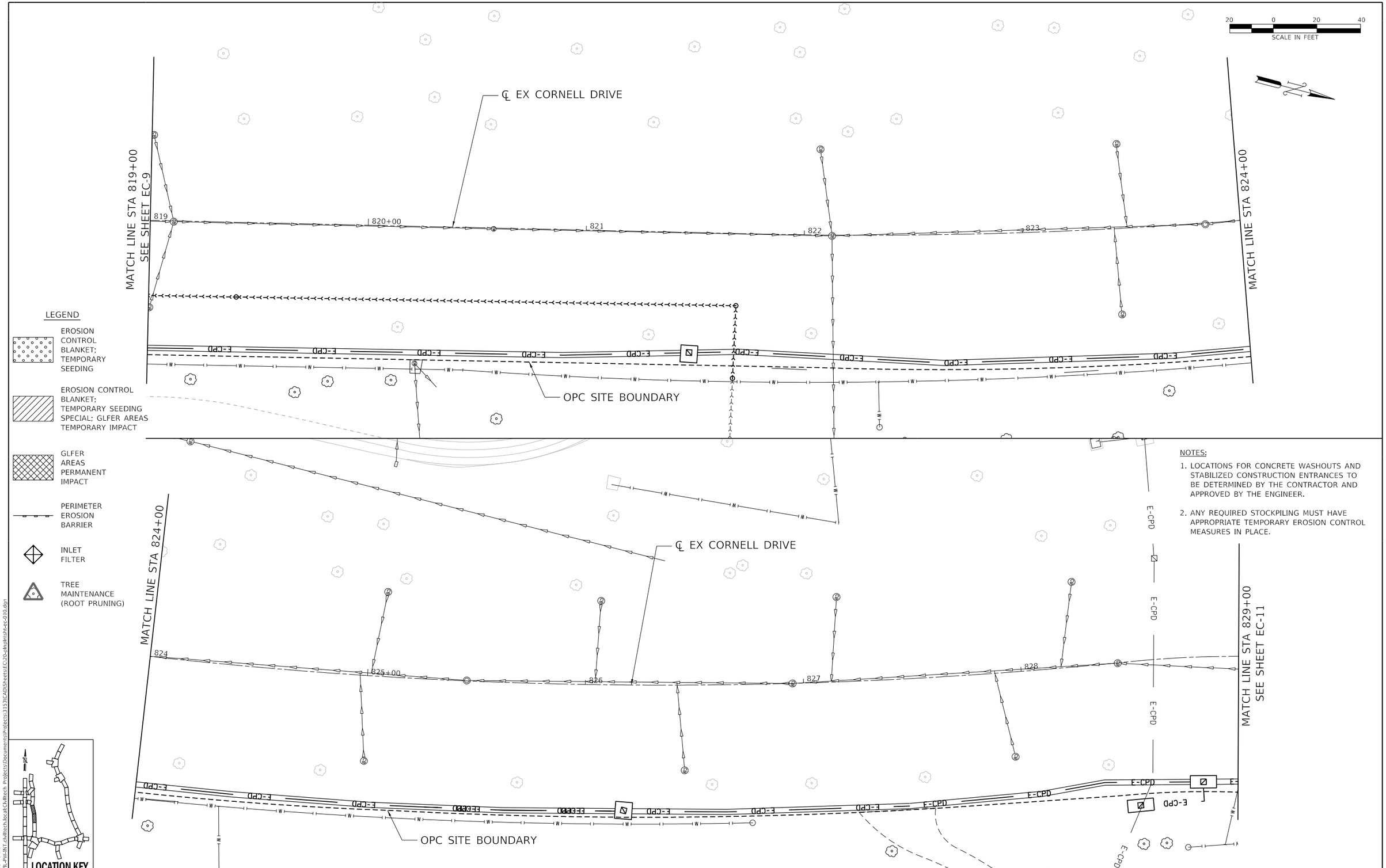


NOTES:

1. LOCATIONS FOR CONCRETE WASHOUTS AND STABILIZED CONSTRUCTION ENTRANCES TO BE DETERMINED BY THE CONTRACTOR AND APPROVED BY THE ENGINEER.
2. ANY REQUIRED STOCKPILING MUST HAVE APPROPRIATE TEMPORARY EROSION CONTROL MEASURES IN PLACE.

PLOT DATE: 5/17/2021
PLOT SCALE: 40.0000 ' / in.
FILE NAME: pw:\\CIVIL-PW-INT.civiltech.local:Civiltech Projects\Documents\Projects\3153\CAD\Sheets\EC\20-plnpln\sht-ec-010.dgn

| | | | | | |
|---|---|---|---|---|---|
| DESIGN: | MSA | | | SREV3 | |
| DRAWN: | MSA | | | SREV2 | |
| CHECKED: | TKL | | | SREV1 | |
| APPROVED: | | NO. | BY | DATE | DESCRIPTION |
| DATE: 01/22/2021 | | REVISIONS | | | |

CDOT CHICAGO DEPARTMENT OF TRANSPORTATION

C*NECT

EROSION CONTROL PLAN
S. CORNELL DR.

JACKSON PARK MOBILITY IMPROVEMENTS

STA. 819+00 TO STA. 829+00

| | | |
|---|---|---|
| CONTRACT NO. - | TOTAL SHEETS 1434 | SHEET NO. 576 |
| PROJECT NO. B-7-203 | DRAWING NO. EC-10 | |
| SCALE: 1"=20' | | |

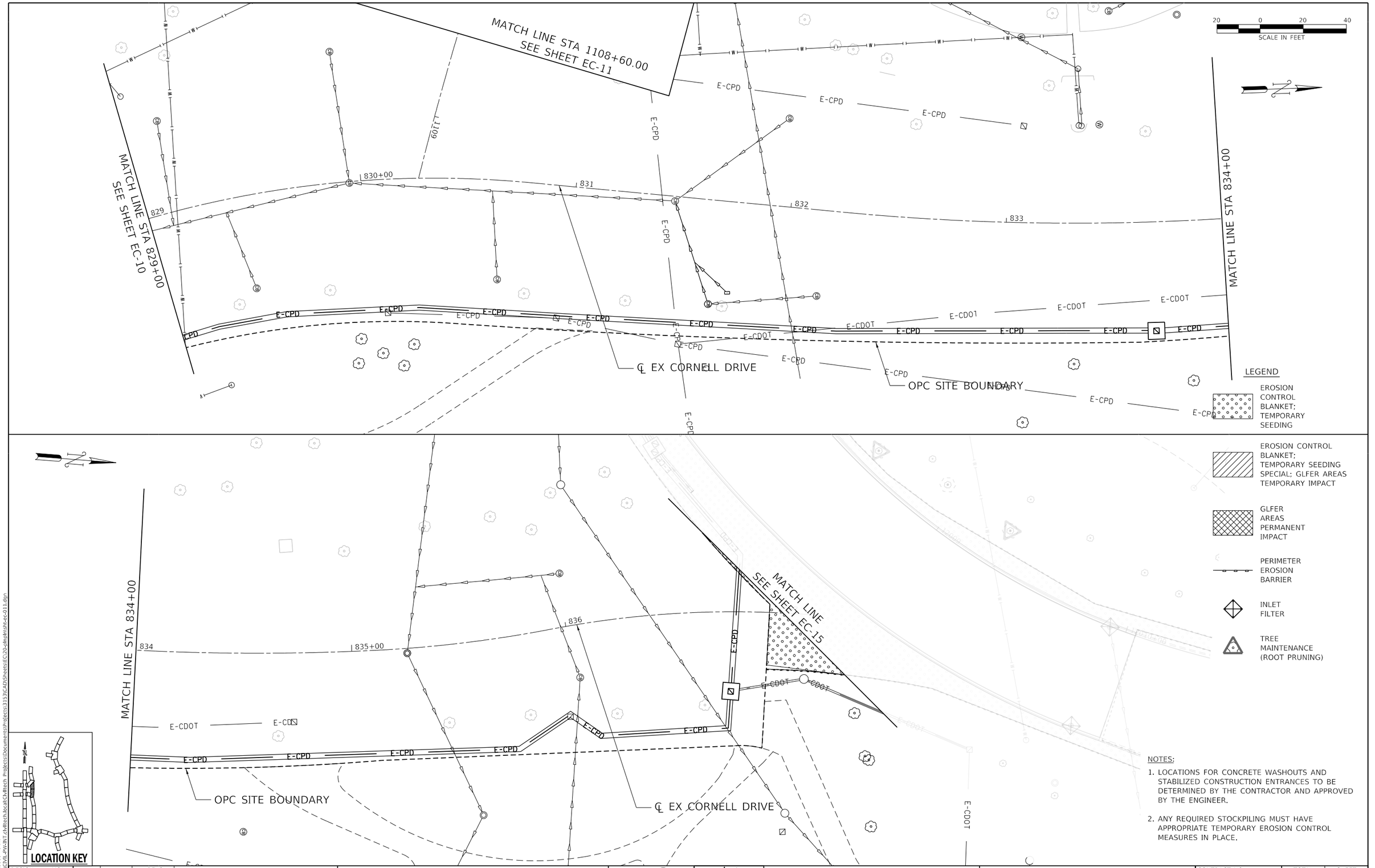


NOTES:

1. LOCATIONS FOR CONCRETE WASHOUTS AND STABILIZED CONSTRUCTION ENTRANCES TO BE DETERMINED BY THE CONTRACTOR AND APPROVED BY THE ENGINEER.
2. ANY REQUIRED STOCKPILING MUST HAVE APPROPRIATE TEMPORARY EROSION CONTROL MEASURES IN PLACE.

PLOT DATE: 5/17/2021
PLOT SCALE: 40.0000 ' / in.
FILE NAME: pw:\\CIVIL-PW-INT.civiltech.local:Civiltech Projects\Documents\Projects\3153\CAD\Sheets\EC\20-plnplnsht-ec-011.dgn

| | | | | |
|---|---|---|---|---|
| DESIGN: MSA | | | $REV3 | |
| DRAWN: MSA | | | $REV2 | |
| CHECKED: TKL | | | $REV1 | |
| APPROVED: | NO. | BY | DATE | DESCRIPTION |
| DATE: 01/22/2021 | REVISIONS | | | |

CDOT CHICAGO DEPARTMENT OF TRANSPORTATION

C*NECT

EROSION CONTROL PLAN
S. CORNELL DR.

JACKSON PARK MOBILITY IMPROVEMENTS

STA. 829+00 TO STA. 837+00

| | | |
|---|---|---|
| CONTRACT NO. - | TOTAL SHEETS 1434 | SHEET NO. 577 |
| PROJECT NO. B-7-203 | DRAWING NO. EC-11 | |
| SCALE: 1"=20' | | |

LEGEND

- EROSION CONTROL BLANKET; TEMPORARY SEEDING
- EROSION CONTROL BLANKET; TEMPORARY SEEDING SPECIAL; GLFER AREAS TEMPORARY IMPACT
- GLFER AREAS PERMANENT IMPACT
- PERIMETER EROSION BARRIER
- INLET FILTER
- TREE MAINTENANCE (ROOT PRUNING)

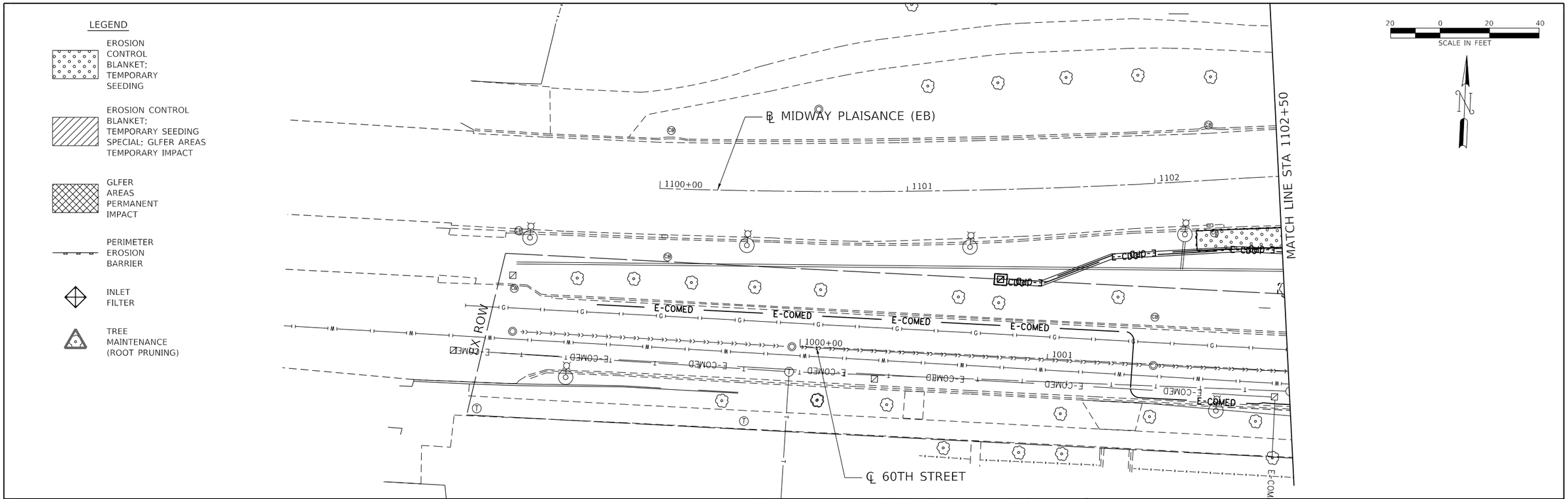


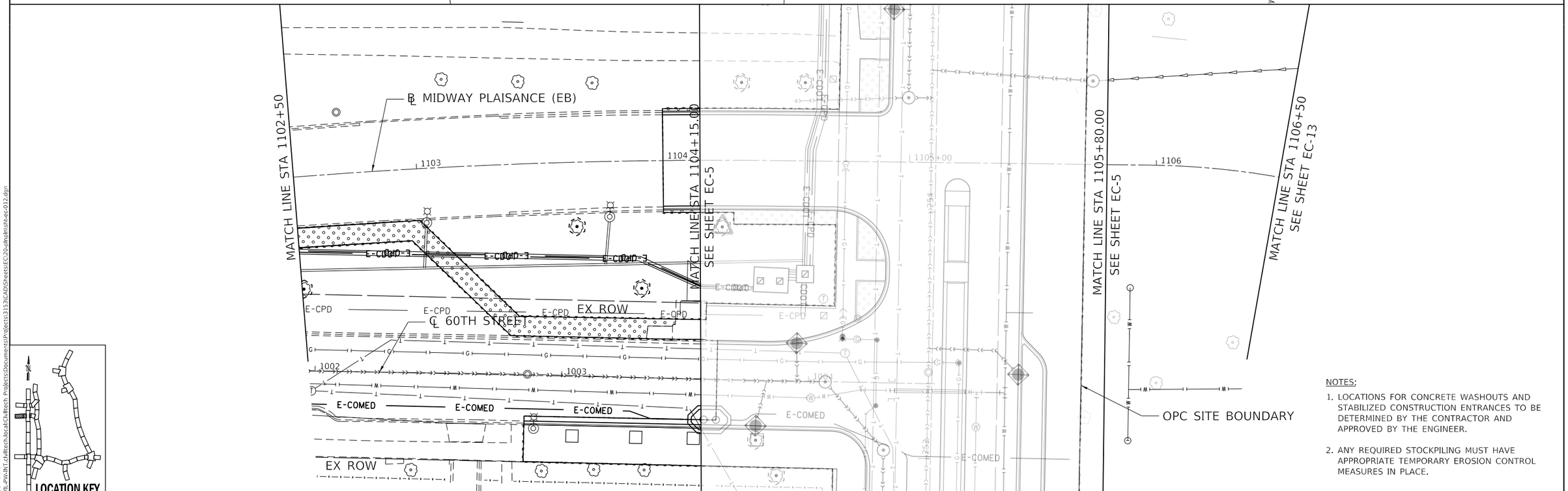





NOTES:

1. LOCATIONS FOR CONCRETE WASHOUTS AND STABILIZED CONSTRUCTION ENTRANCES TO BE DETERMINED BY THE CONTRACTOR AND APPROVED BY THE ENGINEER.
2. ANY REQUIRED STOCKPILING MUST HAVE APPROPRIATE TEMPORARY EROSION CONTROL MEASURES IN PLACE.

| | | | | | |
|---|---|---|---|---|---|
| DESIGN: | MSA | | | $REV3 | |
| DRAWN: | MSA | | | $REV2 | |
| CHECKED: | TKL | | | $REV1 | |
| APPROVED: | | NO. | BY | DATE | DESCRIPTION |
| DATE: 01/22/2021 | | REVISIONS | | | |

CDOT CHICAGO DEPARTMENT OF TRANSPORTATION

C*NECT

EROSION CONTROL PLAN
E. MIDWAY PLAISANCE (S)

JACKSON PARK MOBILITY IMPROVEMENTS

STA. 1100+00 TO STA. 1106+50

| | | |
|---|---|---|
| CONTRACT NO. - | TOTAL SHEETS 1434 | SHEET NO. 578 |
| PROJECT NO. B-7-203 | DRAWING NO. EC-12 | |
| SCALE: 1"=20' | | |

PLOT DATE: 5/17/2021
PLOT SCALE: 40.0000 ' / in.
FILE NAME: pw:\\CIVIL-PW-INT.civiltech.local:Civiltech Projects\Documents\Projects\3153\CAD\Sheets\EC\20-plnpln\sht-ec-012.dgn

LEGEND

EROSION CONTROL BLANKET; TEMPORARY SEEDING

EROSION CONTROL BLANKET; TEMPORARY SEEDING SPECIAL; GLFER AREAS TEMPORARY IMPACT

GLFER AREAS PERMANENT IMPACT

PERIMETER EROSION BARRIER

INLET FILTER

TREE MAINTENANCE (ROOT PRUNING)

20 0 20 40
SCALE IN FEET

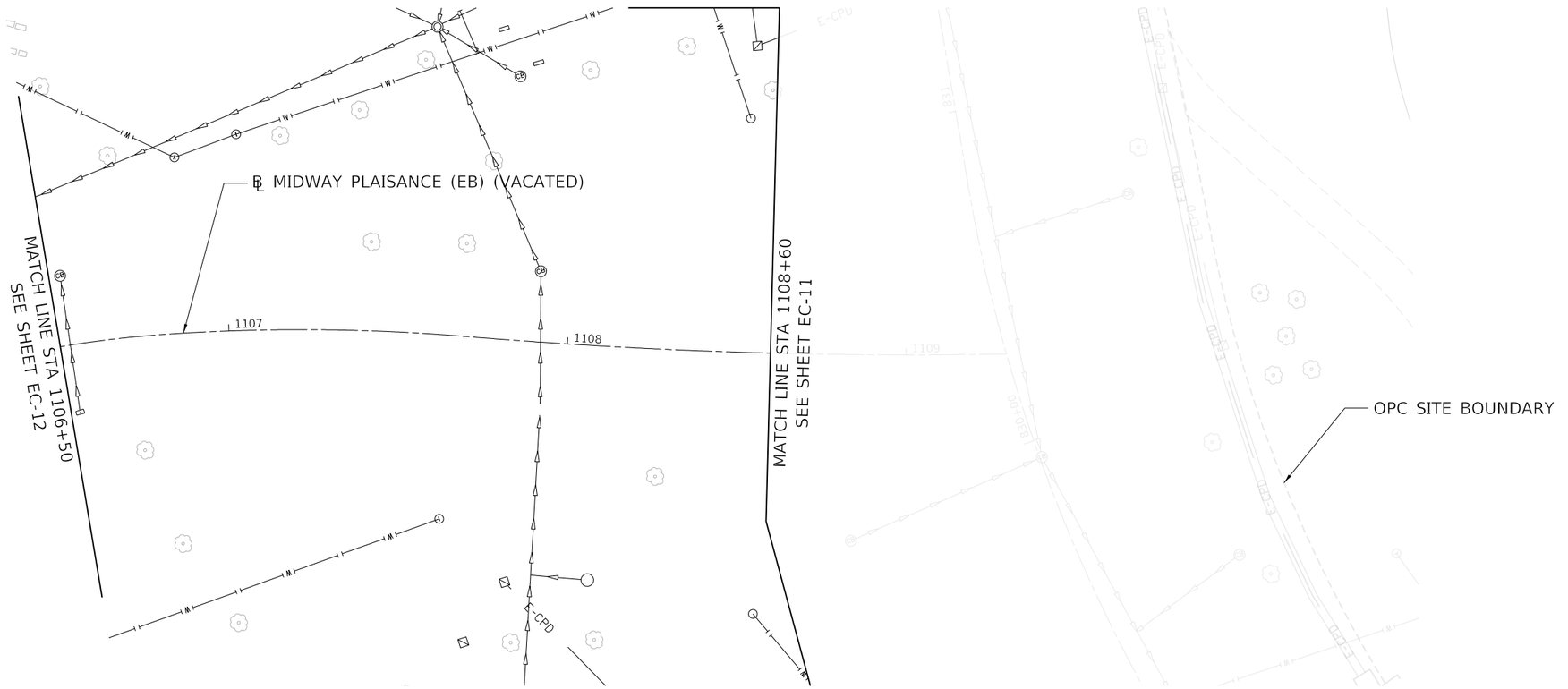


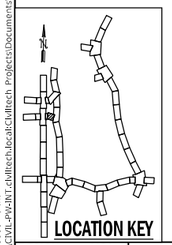


NOTES:

1. LOCATIONS FOR CONCRETE WASHOUTS AND STABILIZED CONSTRUCTION ENTRANCES TO BE DETERMINED BY THE CONTRACTOR AND APPROVED BY THE ENGINEER.

2. ANY REQUIRED STOCKPILING MUST HAVE APPROPRIATE TEMPORARY EROSION CONTROL MEASURES IN PLACE.

| | | | | |
|---|---|---|---|---|
| DESIGN: MSA | | | | |
| DRAWN: MSA | | | | |
| CHECKED: TKL | | | | |
| APPROVED: | NO. | BY | DATE | DESCRIPTION |
| DATE: 01/22/2021 | REVISIONS | | | |

CDOT CHICAGO DEPARTMENT OF TRANSPORTATION

CONNECT

**EROSION CONTROL PLAN**
**E. MIDWAY PLAISANCE (S)**

**JACKSON PARK MOBILITY IMPROVEMENTS**

STA. 1106+50 TO STA. 1108+60

| | |
|---|---|
| CONTRACT NO. | - |
| PROJECT NO. | B-7-203 |
| SCALE: | 1"=20' |

| TOTAL SHEETS | SHEET NO. |
|---|---|
| 1434 | 579 |

DRAWING NO. **EC-13**

PLOT DATE: 5/17/2021
PLOT SCALE: 40.0000 ' / in.
FILE NAME: pw:\\CIVIL-PW-INT.cdot.ad.ctc\dfs\ch.local\CtcUltech Projects\Documents\Projects\3153\CADDSheets\EC02b-IndMidSht-ec-013.dgn

LEGEND

- EROSION CONTROL BLANKET; TEMPORARY SEEDING
- EROSION CONTROL BLANKET; TEMPORARY SEEDING SPECIAL; GLFER AREAS TEMPORARY IMPACT
- GLFER AREAS PERMANENT IMPACT
- PERIMETER EROSION BARRIER
- INLET FILTER
- TREE MAINTENANCE (ROOT PRUNING)

NOTES:

1. LOCATIONS FOR CONCRETE WASHOUTS AND STABILIZED CONSTRUCTION ENTRANCES TO BE DETERMINED BY THE CONTRACTOR AND APPROVED BY THE ENGINEER.
2. ANY REQUIRED STOCKPILING MUST HAVE APPROPRIATE TEMPORARY EROSION CONTROL MEASURES IN PLACE.

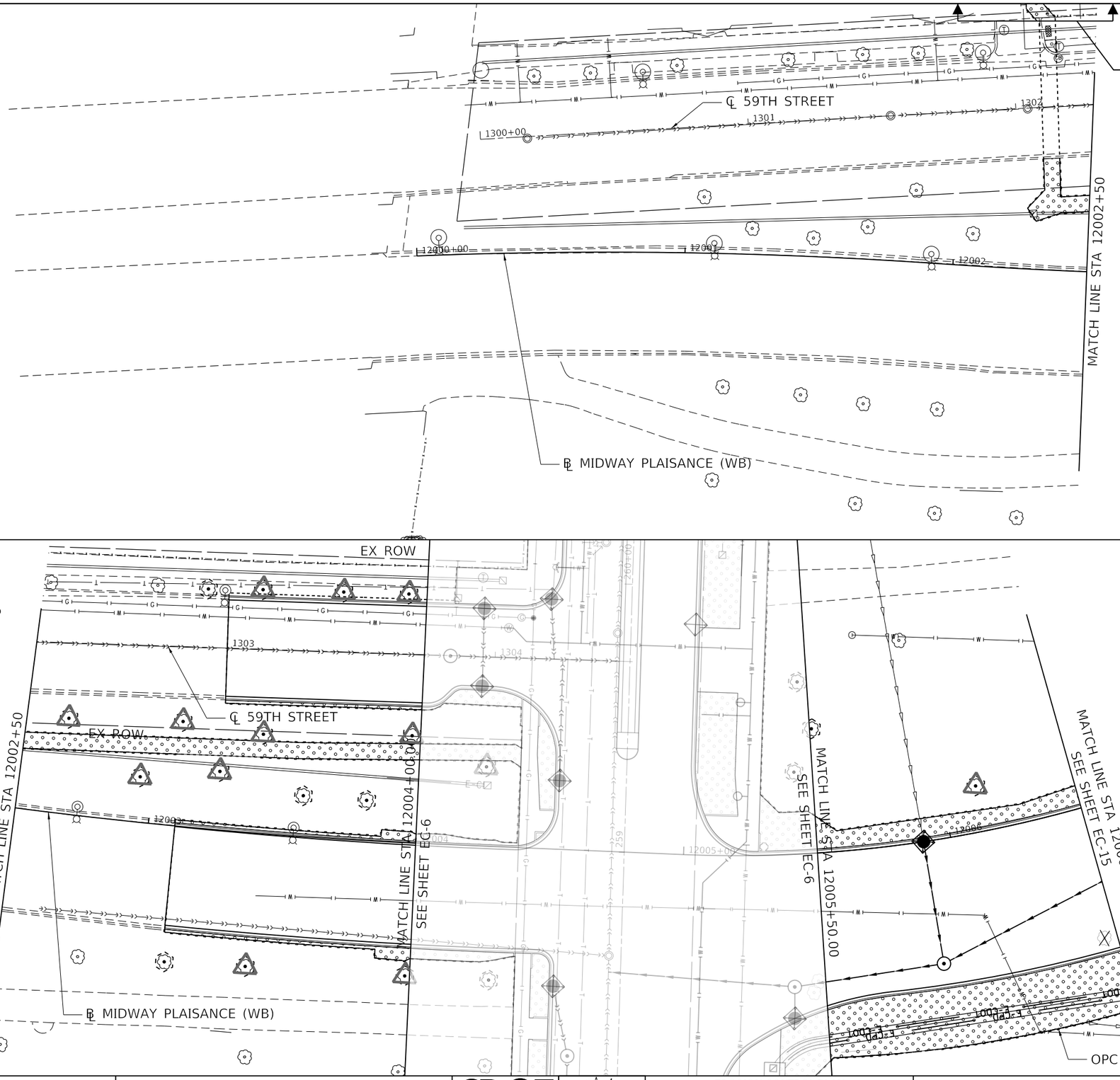


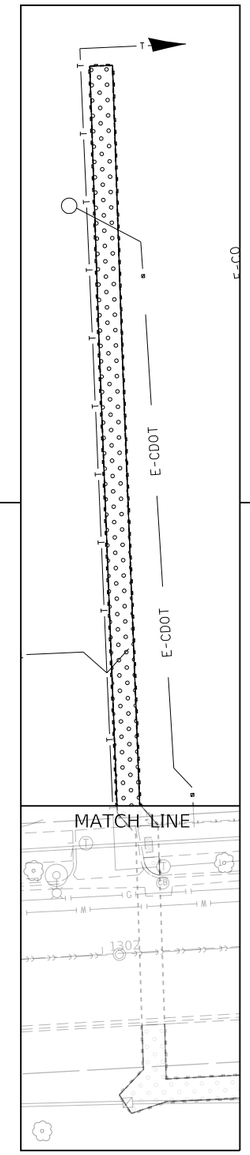


20 0 20 40
SCALE IN FEET

N

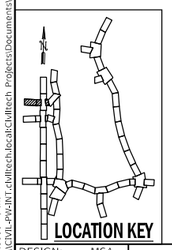


| | | | | | |
|---|---|---|---|---|---|
| DESIGN: MSA | | | | $REV3 | |
| DRAWN: MSA | | | | $REV2 | |
| CHECKED: TKL | | | | $REV1 | |
| APPROVED: | NO. | BY | DATE | DESCRIPTION | |
| DATE: 01/22/2021 | REVISIONS | | | | |

CDOT CHICAGO DEPARTMENT OF TRANSPORTATION

C*NECT

EROSION CONTROL PLAN
E. MIDWAY PLAISANCE (N)

JACKSON PARK MOBILITY IMPROVEMENTS

STA. 12000+00 TO STA. 12006+50

| | |
|---|---|
| CONTRACT NO. - | TOTAL SHEETS 1434 / SHEET NO. 580 |
| PROJECT NO. B-7-203 | DRAWING NO. EC-14 |
| SCALE: 1"=20' | |

PLOT DATE: 5/17/2021
PLOT SCALE: 40.0000 ' / in.
FILE NAME: pw:\\CIVIL-PW-INT-civiltech.local\Civiltech Projects\Documents\Projects\3153\CADD\Sheets\EC\20-plnpln\sht-ec-014.dgn

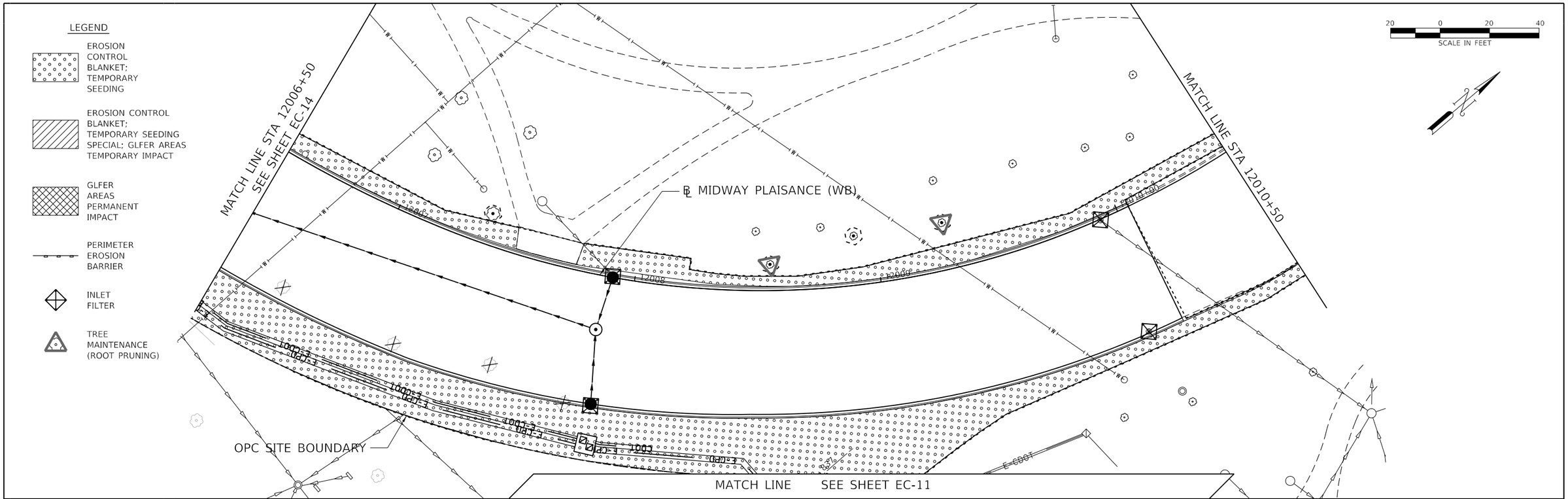


NOTES:

1. LOCATIONS FOR CONCRETE WASHOUTS AND STABILIZED CONSTRUCTION ENTRANCES TO BE DETERMINED BY THE CONTRACTOR AND APPROVED BY THE ENGINEER.
2. ANY REQUIRED STOCKPILING MUST HAVE APPROPRIATE TEMPORARY EROSION CONTROL MEASURES IN PLACE.

PLOT DATE: 5/17/2021
PLOT SCALE: 40.0000 ' / in.
FILE NAME: pw:\\CIVIL-PW-INT.civiltech.local:Civiltech Projects\Documents\Projects\3153\CAD\Sheets\EC\20-plnpln\sht-ec-015.dgn

| | | | | |
|---|---|---|---|---|
| DESIGN: MSA | | | $REV3 | |
| DRAWN: MSA | | | $REV2 | |
| CHECKED: TKL | | | $REV1 | |
| APPROVED: | NO. | BY | DATE | DESCRIPTION |
| DATE: 01/22/2021 | REVISIONS | | | |

CDOT CHICAGO DEPARTMENT OF TRANSPORTATION

C*NECT

EROSION CONTROL PLAN
E. MIDWAY PLAISANCE (N)

JACKSON PARK MOBILITY IMPROVEMENTS

STA. 12006+50 TO STA. 12014+50

| | | |
|---|---|---|
| CONTRACT NO. - | TOTAL SHEETS 1434 | SHEET NO. 581 |
| PROJECT NO. B-7-203 | DRAWING NO. EC-15 | |
| SCALE: 1"=20' | | |

LEGEND

EROSION CONTROL BLANKET; TEMPORARY SEEDING

EROSION CONTROL BLANKET; TEMPORARY SEEDING SPECIAL; GLFER AREAS TEMPORARY IMPACT

GLFER AREAS PERMANENT IMPACT

PERIMETER EROSION BARRIER

INLET FILTER

TREE MAINTENANCE (ROOT PRUNING)

20 0 20 40
SCALE IN FEET

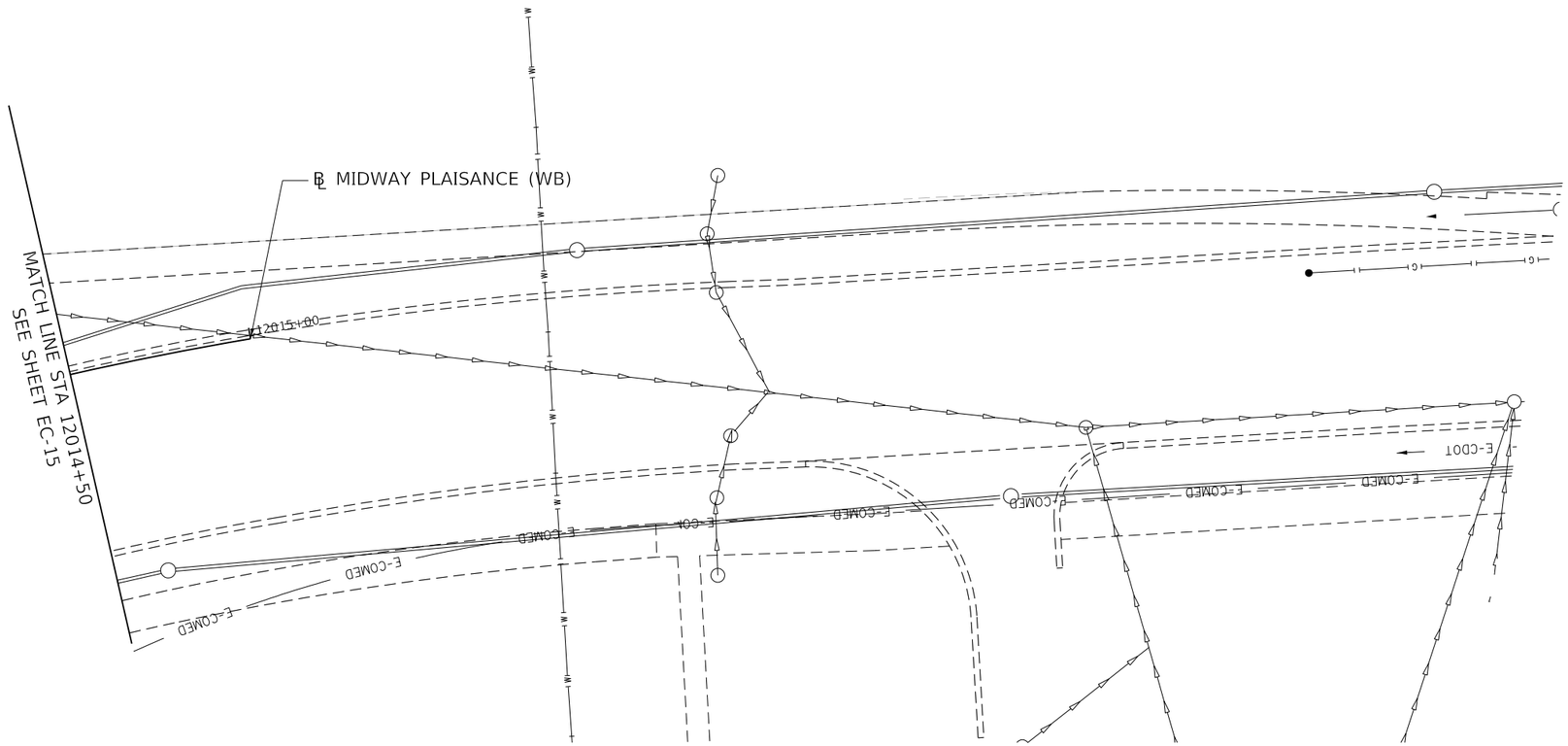


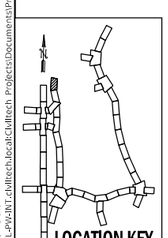


NOTES:

1. LOCATIONS FOR CONCRETE WASHOUTS AND STABILIZED CONSTRUCTION ENTRANCES TO BE DETERMINED BY THE CONTRACTOR AND APPROVED BY THE ENGINEER.
2. ANY REQUIRED STOCKPILING MUST HAVE APPROPRIATE TEMPORARY EROSION CONTROL MEASURES IN PLACE.

PLOT DATE: 5/17/2021
PLOT SCALE: 40.0000 ' / in.
FILE NAME: pw:\\CIVIL-PW-INT.civiltech.local:Civiltech Projects\Documents\Projects\3153\CAD\Sheets\EC\20-plnplnsht-ec-016.dgn

| | | | | |
|---|---|---|---|---|
| DESIGN: MSA | | | | |
| DRAWN: MSA | | | | |
| CHECKED: TKL | | | | |
| APPROVED: | NO. | BY | DATE | DESCRIPTION |
| DATE: 01/22/2021 | REVISIONS | | | |

CDOT CHICAGO DEPARTMENT OF TRANSPORTATION

C*NECT

EROSION CONTROL PLAN
E. MIDWAY PLAISANCE (N)

JACKSON PARK MOBILITY IMPROVEMENTS

STA. 12014+50 TO STA. 12015+00

| | | |
|---|---|---|
| CONTRACT NO. - | TOTAL SHEETS 1434 | SHEET NO. 582 |
| PROJECT NO. B-7-203 | DRAWING NO. EC-16 | |
| SCALE: 1"=20' | | |

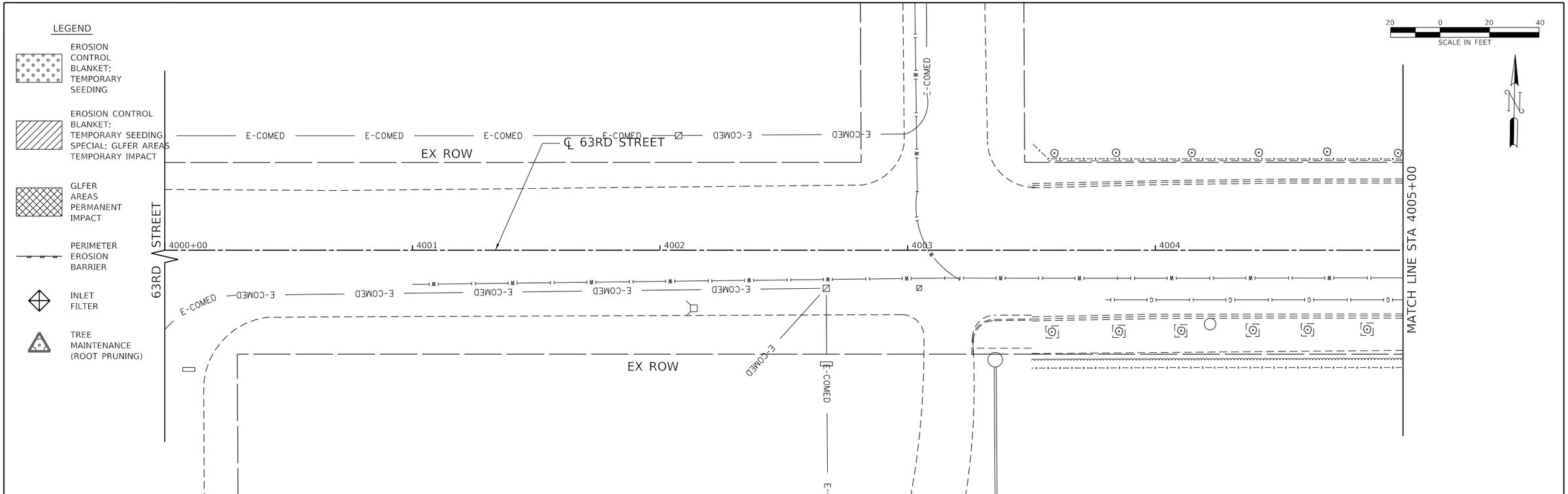


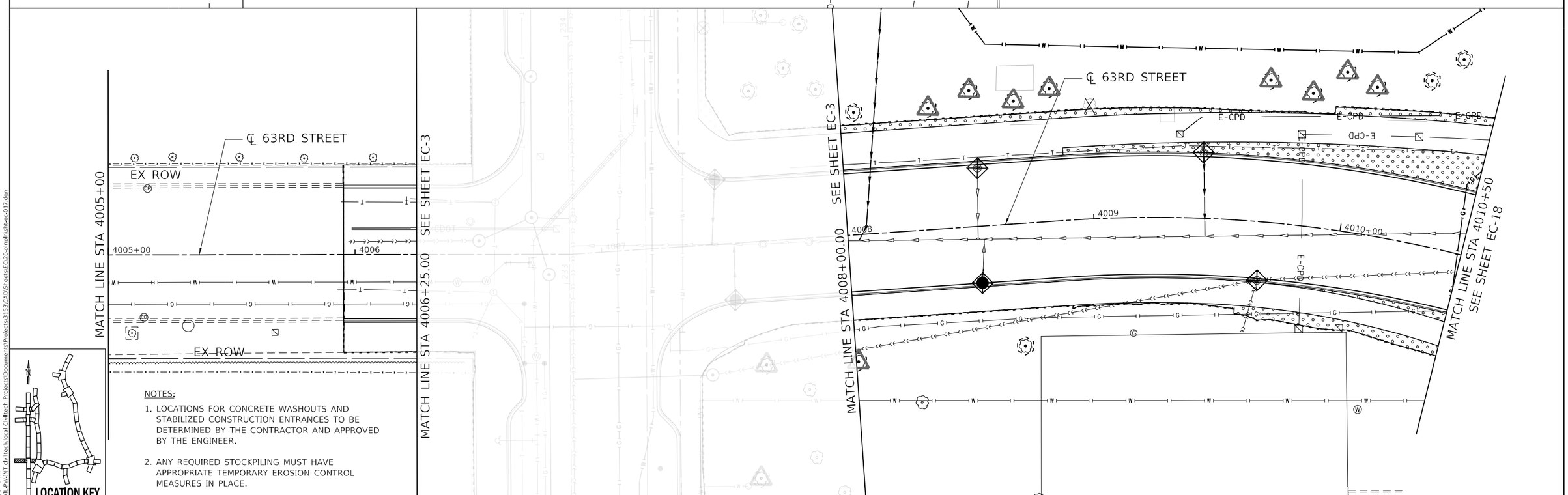


NOTES:

1. LOCATIONS FOR CONCRETE WASHOUTS AND STABILIZED CONSTRUCTION ENTRANCES TO BE DETERMINED BY THE CONTRACTOR AND APPROVED BY THE ENGINEER.
2. ANY REQUIRED STOCKPILING MUST HAVE APPROPRIATE TEMPORARY EROSION CONTROL MEASURES IN PLACE.

| | | | | |
|---|---|---|---|---|
| DESIGN: MSA | | | SREV3 | |
| DRAWN: MSA | | | SREV2 | |
| CHECKED: TKL | | | SREV1 | |
| APPROVED: | NO. | BY | DATE | DESCRIPTION |
| DATE: 01/22/2021 | REVISIONS | | | |

CDOT CHICAGO DEPARTMENT OF TRANSPORTATION

C*NECT

EROSION CONTROL PLAN
E. 63RD ST.

JACKSON PARK MOBILITY IMPROVEMENTS

STA. 4000+00 TO STA. 4010+50

| | | |
|---|---|---|
| CONTRACT NO. - | TOTAL SHEETS 1434 | SHEET NO. 583 |
| PROJECT NO. B-7-203 | DRAWING NO. EC-17 | |
| SCALE: 1"=20' | | |

PLOT DATE: 5/17/2021
PLOT SCALE: 40.0000 ' / in.
FILE NAME: pw:\\CIVIL-PW-INT.civiltech.local:Civiltech Projects\Documents\Projects\3153\CAD\Sheets\EC\20-plnplnsht-ec-017.dgn

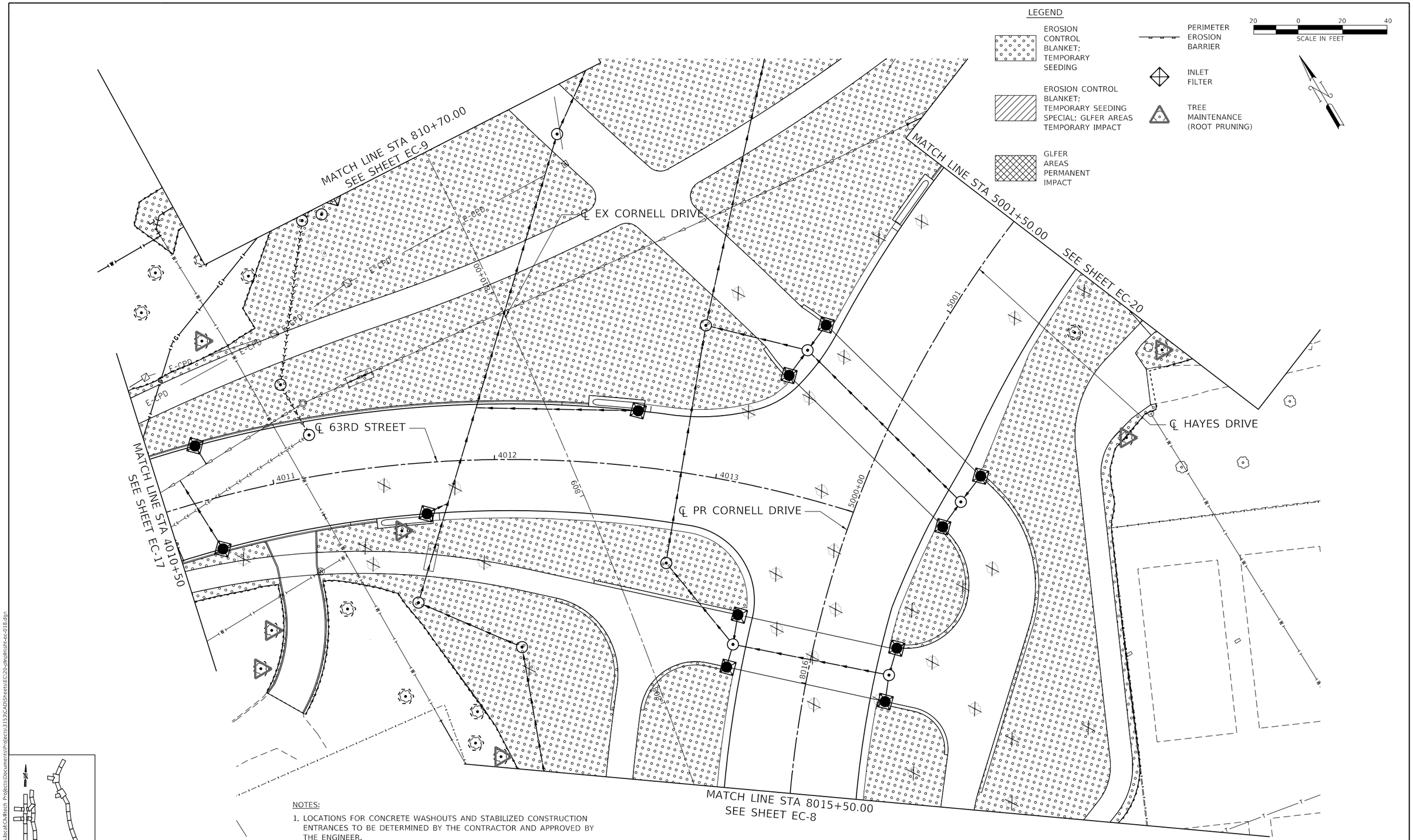


NOTES:

1. LOCATIONS FOR CONCRETE WASHOUTS AND STABILIZED CONSTRUCTION ENTRANCES TO BE DETERMINED BY THE CONTRACTOR AND APPROVED BY THE ENGINEER.

2. ANY REQUIRED STOCKPILING MUST HAVE APPROPRIATE TEMPORARY EROSION CONTROL MEASURES IN PLACE.

PLOT DATE: 5/17/2021
PLOT SCALE: 40.0000 ' / in.
FILE NAME: pw:\\CIVIL-PW-INT.civiltech.local:Civiltech Projects\Documents\Projects\3153\CAD\Sheets\EC\20-plnplnsht-ec-018.dgn

| | | | | |
|---|---|---|---|---|
| DESIGN: MSA | | | | |
| DRAWN: MSA | | | | |
| CHECKED: TKL | | | | |
| APPROVED: | NO. | BY | DATE | DESCRIPTION |
| DATE: 01/22/2021 | REVISIONS | | | |

CDOT CHICAGO DEPARTMENT OF TRANSPORTATION

C*NECT

EROSION CONTROL PLAN
E. 63RD ST./E. HAYES DR./S. CORNELL DR.

JACKSON PARK MOBILITY IMPROVEMENTS

STA. 4010+50 TO STA. 5001+50

| | | |
|---|---|---|
| CONTRACT NO. - | TOTAL SHEETS 1434 | SHEET NO. 584 |
| PROJECT NO. B-7-203 | DRAWING NO. EC-18 | |
| SCALE: 1"=20' | | |

LEGEND

- EROSION CONTROL BLANKET; TEMPORARY SEEDING
- EROSION CONTROL BLANKET; TEMPORARY SEEDING SPECIAL; GLFER AREAS TEMPORARY IMPACT
- GLFER AREAS PERMANENT IMPACT
- PERIMETER EROSION BARRIER
- INLET FILTER
- TREE MAINTENANCE (ROOT PRUNING)

20 0 20 40
SCALE IN FEET

NOTES:

1. LOCATIONS FOR CONCRETE WASHOUTS AND STABILIZED CONSTRUCTION ENTRANCES TO BE DETERMINED BY THE CONTRACTOR AND APPROVED BY THE ENGINEER.
2. ANY REQUIRED STOCKPILING MUST HAVE APPROPRIATE TEMPORARY EROSION CONTROL MEASURES IN PLACE.

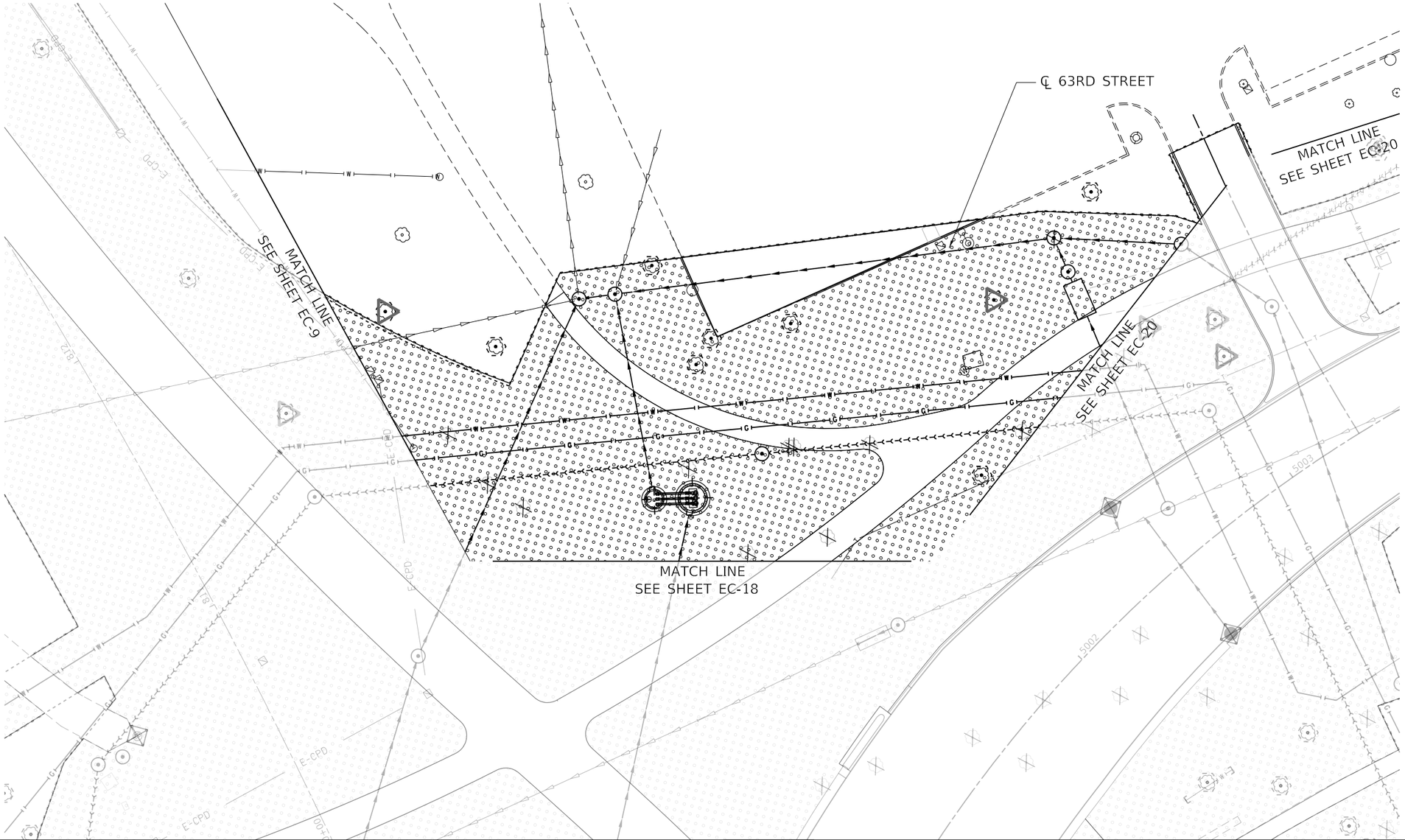


LOCATION KEY

| | | | | |
|---|---|---|---|---|
| DESIGN: MSA | | | | |
| DRAWN: MSA | | | | |
| CHECKED: TKL | | | | |
| APPROVED: | NO. | BY | DATE | DESCRIPTION |
| DATE: 01/22/2021 | REVISIONS | | | |

CDOT CHICAGO DEPARTMENT OF TRANSPORTATION

C★NECT

EROSION CONTROL PLAN
E. 63RD ST./E. HAYES DR./S. CORNELL DR.

JACKSON PARK MOBILITY IMPROVEMENTS

STA. 5001+50 TO STA. 5003+50

| | |
|---|---|
| CONTRACT NO. | - |
| PROJECT NO. | B-7-203 |
| SCALE: | 1"=20' |

| TOTAL SHEETS | SHEET NO. |
|---|---|
| 1434 | 585 |
| DRAWING NO. | EC-19 |

PLOT DATE: 5/17/2021
PLOT SCALE: 40.0001 ' / in.
FILE NAME: pw:\\CIVIL-PW-INT.civilTech.local:CivilTech Projects\Documents\Projects\3153\tCADSheets\EC-20-illnplnsht-ec-036.dgn

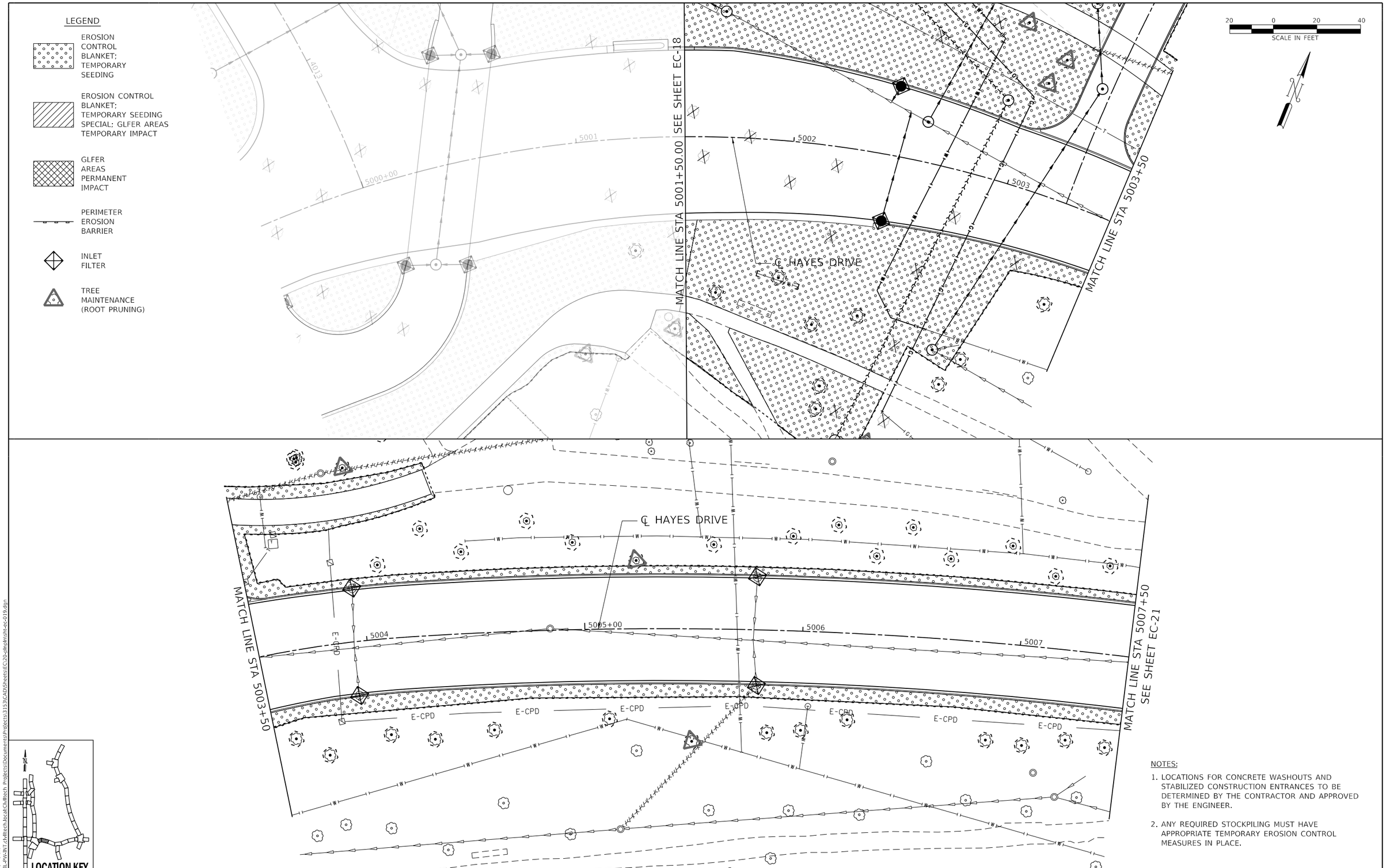


NOTES:

1. LOCATIONS FOR CONCRETE WASHOUTS AND STABILIZED CONSTRUCTION ENTRANCES TO BE DETERMINED BY THE CONTRACTOR AND APPROVED BY THE ENGINEER.
2. ANY REQUIRED STOCKPILING MUST HAVE APPROPRIATE TEMPORARY EROSION CONTROL MEASURES IN PLACE.

| | | | | |
|---|---|---|---|---|
| DESIGN: MSA | | | $REV3 | |
| DRAWN: MSA | | | $REV2 | |
| CHECKED: TKL | | | $REV1 | |
| APPROVED: | NO. | BY | DATE | DESCRIPTION |
| DATE: 01/22/2021 | REVISIONS | | | |

CDOT CHICAGO DEPARTMENT OF TRANSPORTATION

C*NECT

EROSION CONTROL PLAN
E. HAYES DR.

JACKSON PARK MOBILITY IMPROVEMENTS

STA. 5001+50 TO STA. 5007+50

| | | |
|---|---|---|
| CONTRACT NO. - | TOTAL SHEETS 1434 | SHEET NO. 586 |
| PROJECT NO. B-7-203 | DRAWING NO. EC-20 | |
| SCALE: 1"=20' | | |

PLOT DATE: 5/17/2021
PLOT SCALE: 40.0000 ' / in.
FILE NAME: pw:\\CIVIL-PW-INT.civiltech.local:Civiltech Projects\Documents\Projects\3153\CAD\Sheets\EC\20-plnpln\sht-ec-019.dgn

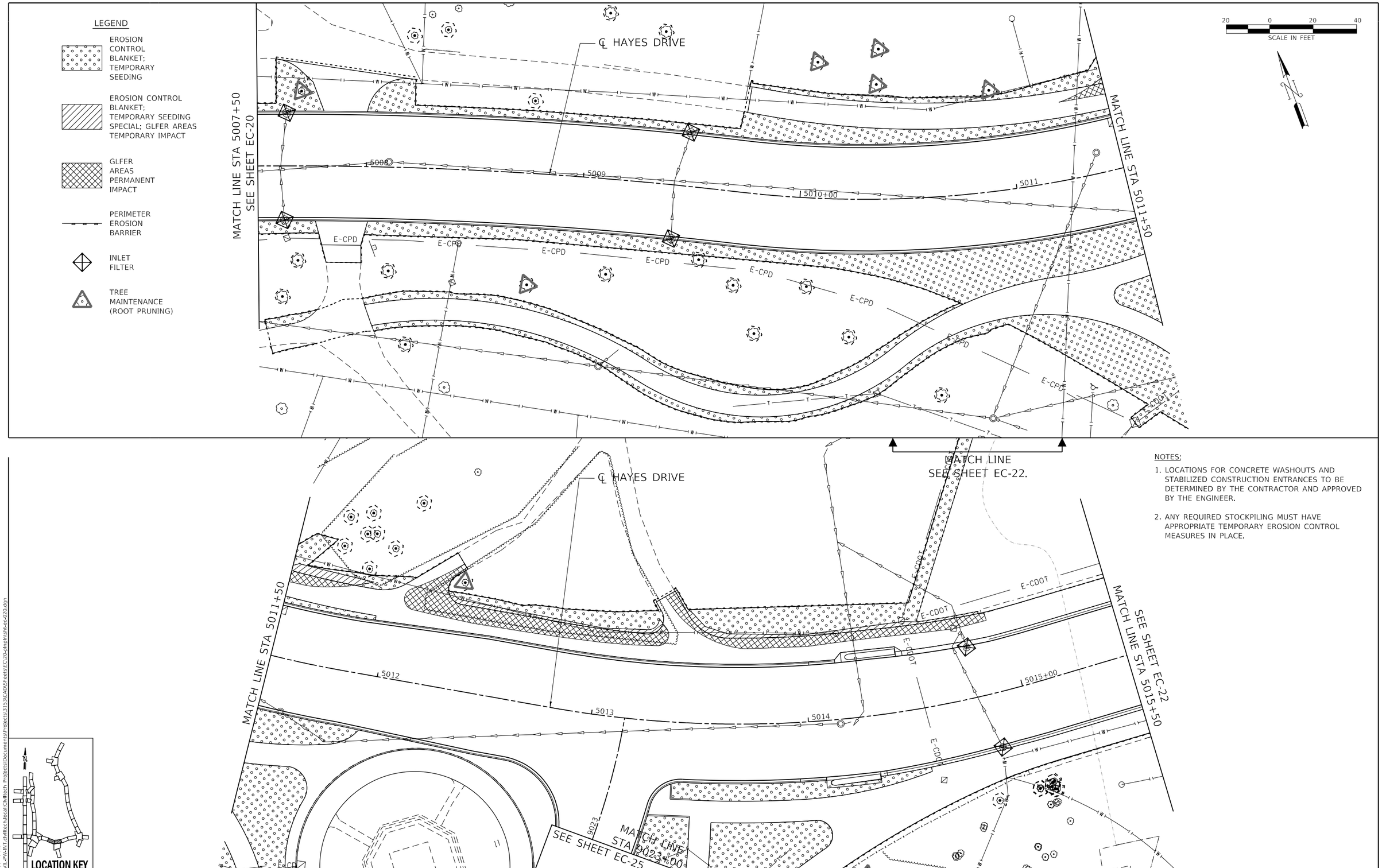


NOTES:

1. LOCATIONS FOR CONCRETE WASHOUTS AND STABILIZED CONSTRUCTION ENTRANCES TO BE DETERMINED BY THE CONTRACTOR AND APPROVED BY THE ENGINEER.
2. ANY REQUIRED STOCKPILING MUST HAVE APPROPRIATE TEMPORARY EROSION CONTROL MEASURES IN PLACE.

| | | | | | |
|---|---|---|---|---|---|
| DESIGN: MSA | | | SREV3 | | |
| DRAWN: MSA | | | SREV2 | | |
| CHECKED: TKL | | | SREV1 | | |
| APPROVED: | NO. | BY | DATE | DESCRIPTION | |
| DATE: 01/22/2021 | REVISIONS | | | | |

CDOT CHICAGO DEPARTMENT OF TRANSPORTATION

C*NECT

EROSION CONTROL PLAN
E. HAYES DR.

JACKSON PARK MOBILITY IMPROVEMENTS

STA. 5007+50 TO STA. 5015+50

| | | |
|---|---|---|
| CONTRACT NO. - | TOTAL SHEETS 1434 | SHEET NO. 587 |
| PROJECT NO. B-7-203 | DRAWING NO. EC-21 | |
| SCALE: 1"=20' | | |

PLOT DATE: 5/17/2021
PLOT SCALE: 40.0000 ' / in.
FILE NAME: pw:\\CIVIL-PW-INT.civiltech.local:Civiltech Projects\Documents\Projects\3153\CAD\Sheets\EC\20-plnpln\sht-ec-020.dgn

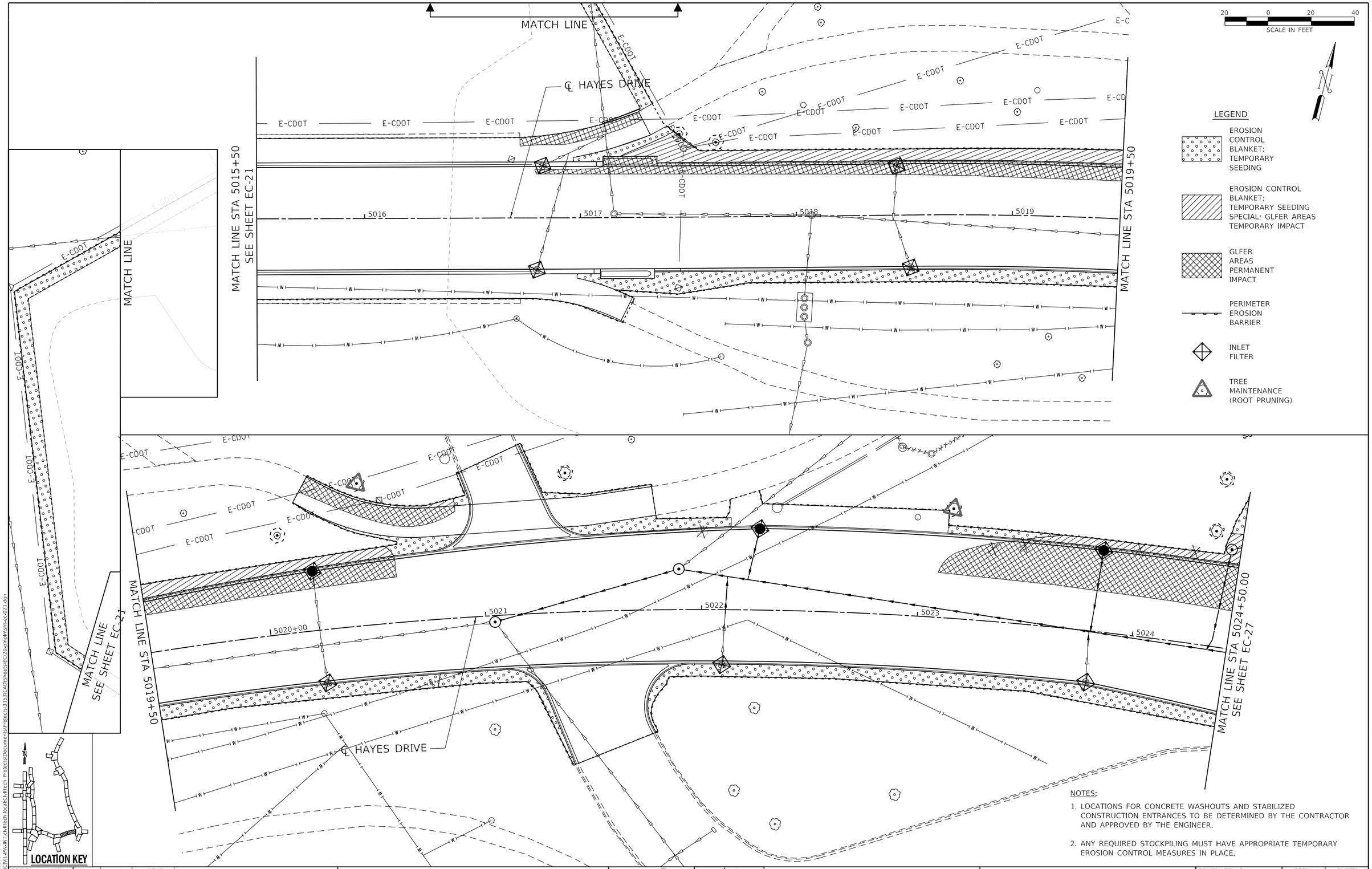


NOTES:

1. LOCATIONS FOR CONCRETE WASHOUTS AND STABILIZED CONSTRUCTION ENTRANCES TO BE DETERMINED BY THE CONTRACTOR AND APPROVED BY THE ENGINEER.
2. ANY REQUIRED STOCKPILING MUST HAVE APPROPRIATE TEMPORARY EROSION CONTROL MEASURES IN PLACE.

| | | | | | |
|---|---|---|---|---|---|
| DESIGN: MSA | | | | SREV3 | |
| DRAWN: MSA | | | | SREV2 | |
| CHECKED: TKL | | | | SREV1 | |
| APPROVED: | NO. | BY | DATE | DESCRIPTION | |
| DATE: 01/22/2021 | REVISIONS | | | | |

CHICAGO DEPARTMENT OF TRANSPORTATION

C*NECT

# EROSION CONTROL PLAN
## E. HAYES DR.

JACKSON PARK MOBILITY IMPROVEMENTS

STA. 5015+50 TO STA. 5024+50

| | | | |
|---|---|---|---|
| CONTRACT NO. - | | TOTAL SHEETS | SHEET NO. |
| PROJECT NO. B-7-203 | | 1434 | 588 |
| SCALE: 1"=20' | | DRAWING NO. EC-22 | |

PLOT DATE: 5/17/2021
PLOT SCALE: 40.0000 ' / in.
FILE NAME: pw:\\CTVIL-PW-INT-civiltech.local\Civiltech Projects\Documents\Projects\3153\CADSheets\EC20-allnight-ec021.dgn

20 0 20 40
SCALE IN FEET

N

LEGEND

- EROSION CONTROL BLANKET; TEMPORARY SEEDING
- EROSION CONTROL BLANKET; TEMPORARY SEEDING SPECIAL; GLFER AREAS TEMPORARY IMPACT
- GLFER AREAS PERMANENT IMPACT
- PERIMETER EROSION BARRIER
- INLET FILTER
- TREE MAINTENANCE (ROOT PRUNING)

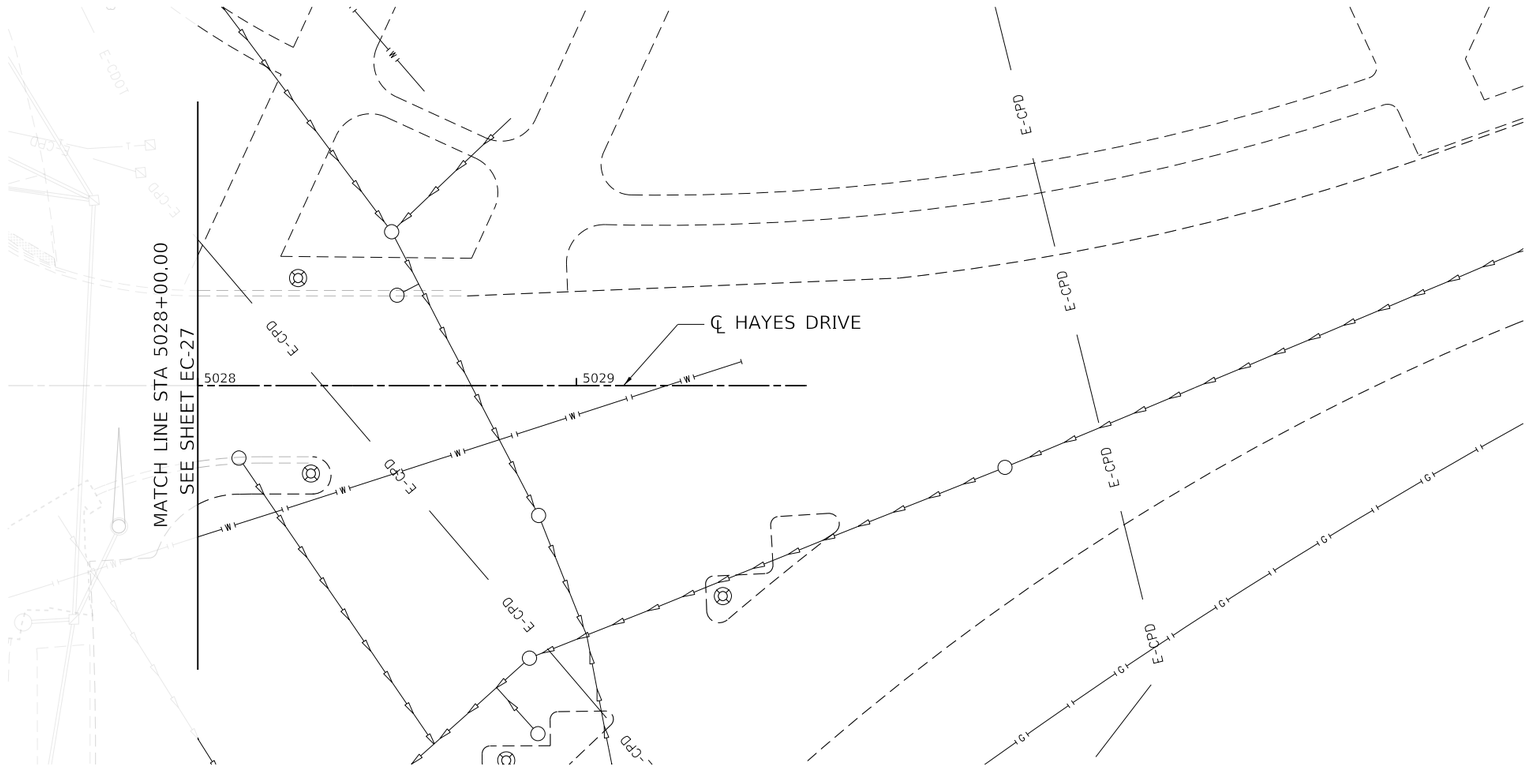


NOTES:

1. LOCATIONS FOR CONCRETE WASHOUTS AND STABILIZED CONSTRUCTION ENTRANCES TO BE DETERMINED BY THE CONTRACTOR AND APPROVED BY THE ENGINEER.
2. ANY REQUIRED STOCKPILING MUST HAVE APPROPRIATE TEMPORARY EROSION CONTROL MEASURES IN PLACE.

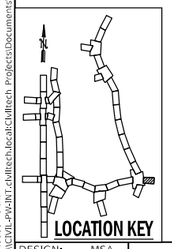


LOCATION KEY

PLOT DATE: 5/17/2021
PLOT SCALE: 40.0000 ' / in.
FILE NAME: pw:\\CIVIL-PW-INT.civiltech.local:Civiltech Projects\Documents\Projects\3153\CAD\Sheets\EC\20-plnplnsht-ec-022.dgn

| | | | | |
|---|---|---|---|---|
| DESIGN: MSA | | | | |
| DRAWN: MSA | | | | |
| CHECKED: TKL | | | | |
| APPROVED: | NO. | BY | DATE | DESCRIPTION |
| DATE: 01/22/2021 | REVISIONS | | | |

CDOT CHICAGO DEPARTMENT OF TRANSPORTATION

C*NECT

EROSION CONTROL PLAN
E. HAYES DR.

JACKSON PARK MOBILITY IMPROVEMENTS

STA. 5028+00 TO STA. 5029+50

| | | |
|---|---|---|
| CONTRACT NO. - | TOTAL SHEETS 1434 | SHEET NO. 589 |
| PROJECT NO. B-7-203 | DRAWING NO. EC-23 | |
| SCALE: 1"=20' | | |

LEGEND

- EROSION CONTROL BLANKET; TEMPORARY SEEDING
- EROSION CONTROL BLANKET; TEMPORARY SEEDING SPECIAL; GLFER AREAS TEMPORARY IMPACT
- GLFER AREAS PERMANENT IMPACT
- PERIMETER EROSION BARRIER
- INLET FILTER
- TREE MAINTENANCE (ROOT PRUNING)

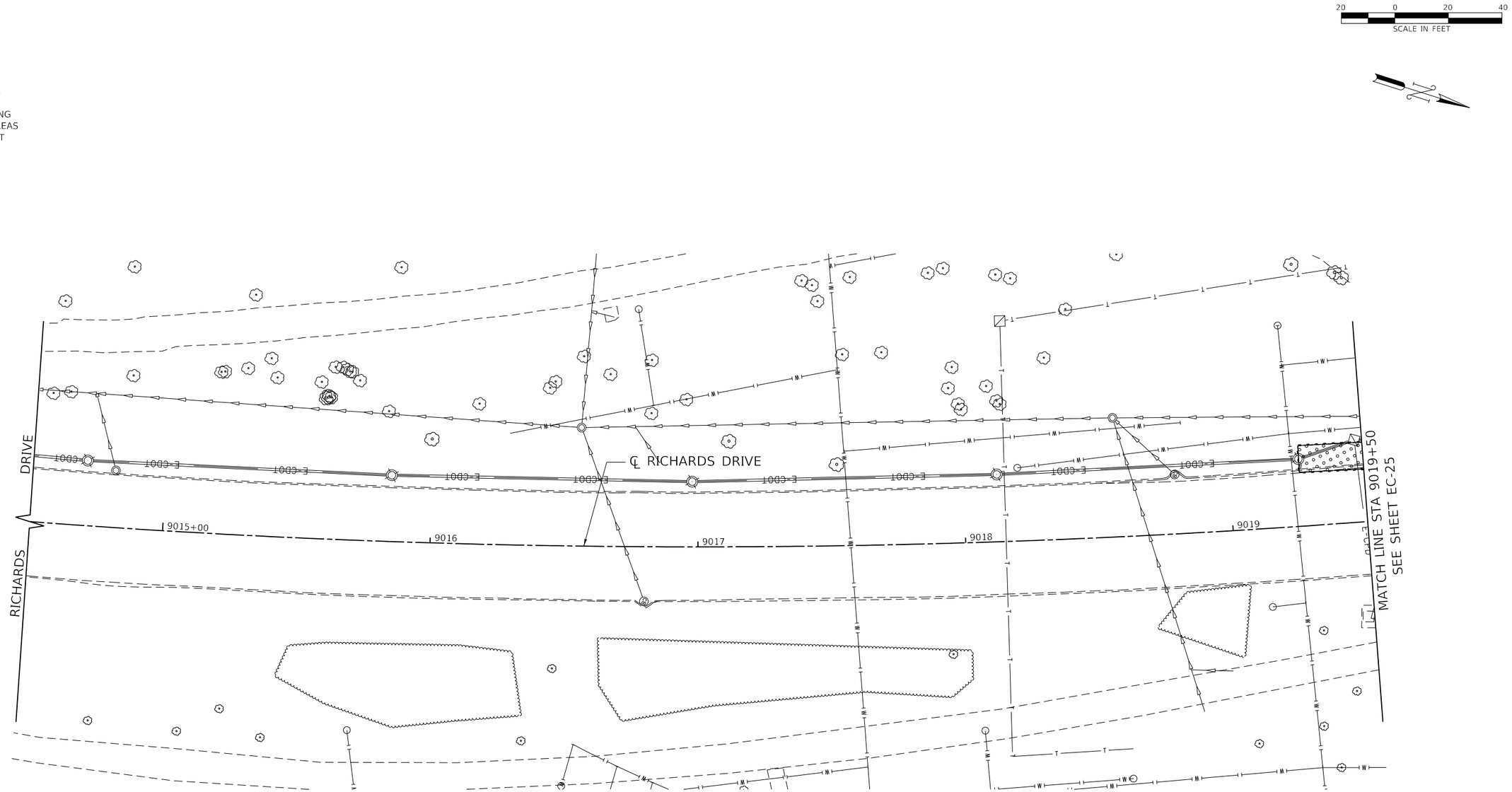


NOTES:

1. LOCATIONS FOR CONCRETE WASHOUTS AND STABILIZED CONSTRUCTION ENTRANCES TO BE DETERMINED BY THE CONTRACTOR AND APPROVED BY THE ENGINEER.
2. ANY REQUIRED STOCKPILING MUST HAVE APPROPRIATE TEMPORARY EROSION CONTROL MEASURES IN PLACE.

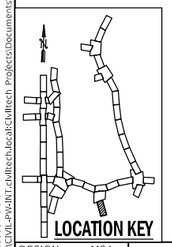


PLOT DATE: 5/17/2021
PLOT SCALE: 40.0000 ' / in.
FILE NAME: pw:\\CIVIL-PW-INT.civiltech.local:Civiltech Projects\Documents\Projects\3153\CAD\Sheets\EC\20-plnpln\sht-ec-023.dgn

| | | | | |
|---|---|---|---|---|
| DESIGN: MSA | | | | |
| DRAWN: MSA | | | | |
| CHECKED: TKL | | | | |
| APPROVED: | NO. | BY | DATE | DESCRIPTION |
| DATE: 01/22/2021 | REVISIONS | | | |

CDOT CHICAGO DEPARTMENT OF TRANSPORTATION

C*NECT

EROSION CONTROL PLAN
S. RICHARDS DR.

JACKSON PARK MOBILITY IMPROVEMENTS

STA. 9014+50 TO STA. 9019+50

| | | |
|---|---|---|
| CONTRACT NO. - | TOTAL SHEETS 1434 | SHEET NO. 590 |
| PROJECT NO. B-7-203 | DRAWING NO. EC-24 | |
| SCALE: 1"=20' | | |

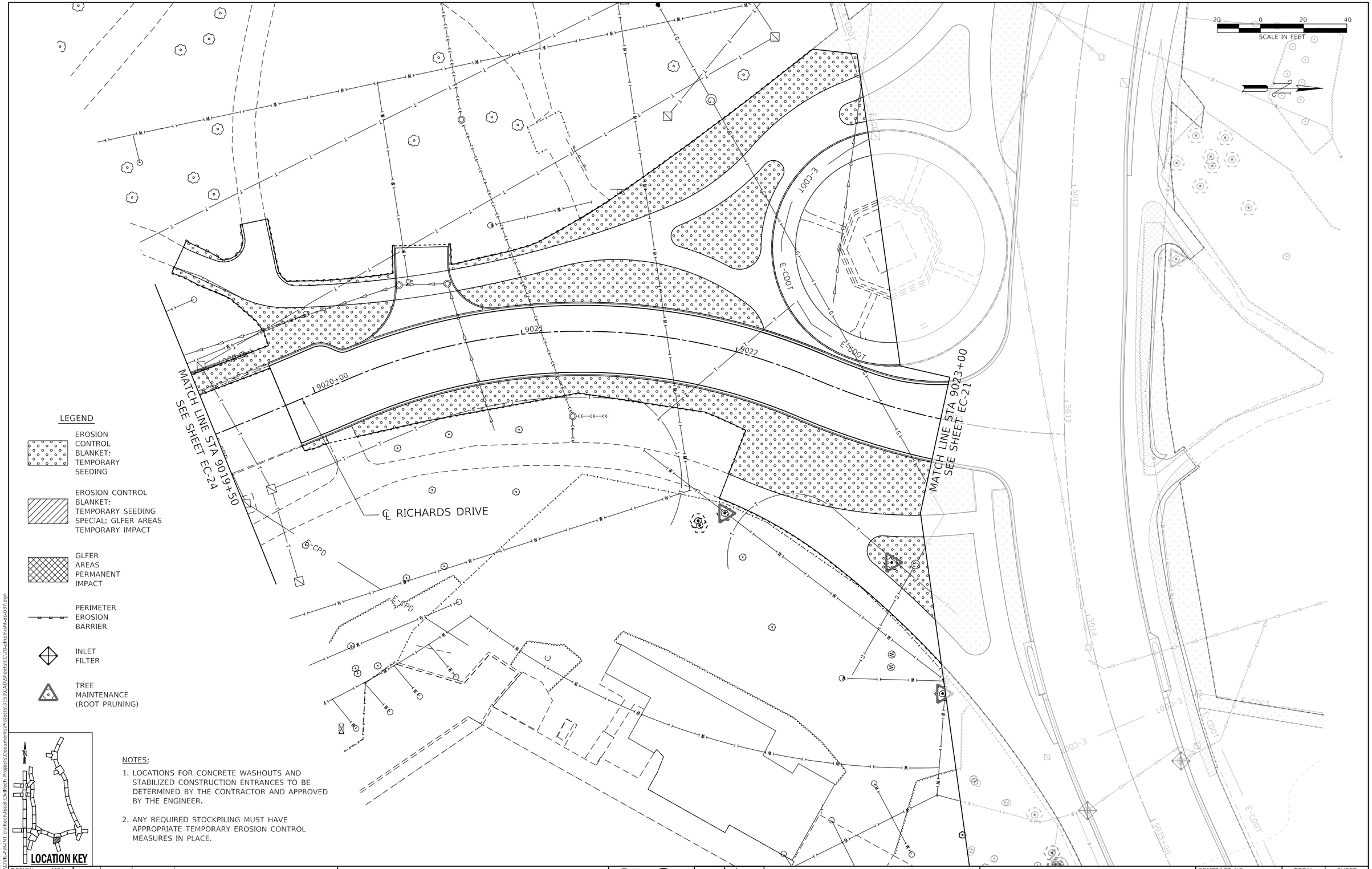


LEGEND

- EROSION CONTROL BLANKET; TEMPORARY SEEDING
- EROSION CONTROL BLANKET; TEMPORARY SEEDING SPECIAL; GLFER AREAS TEMPORARY IMPACT
- GLFER AREAS PERMANENT IMPACT
- PERIMETER EROSION BARRIER
- INLET FILTER
- TREE MAINTENANCE (ROOT PRUNING)

NOTES:

1. LOCATIONS FOR CONCRETE WASHOUTS AND STABILIZED CONSTRUCTION ENTRANCES TO BE DETERMINED BY THE CONTRACTOR AND APPROVED BY THE ENGINEER.
2. ANY REQUIRED STOCKPILING MUST HAVE APPROPRIATE TEMPORARY EROSION CONTROL MEASURES IN PLACE.

PLOT DATE: 5/17/2021
PLOT SCALE: 40.0000 ' / in.
FILE NAME: pw:\\CIVIL-PW-INT.civiltech.local:Civiltech Projects\Documents\Projects\3153\CAD\Sheets\EC20-plnpln\sht-ec-037.dgn

| | | | | |
|---|---|---|---|---|
| DESIGN: MSA | | | | |
| DRAWN: MSA | | | | |
| CHECKED: TKL | | | | |
| APPROVED: | NO. | BY | DATE | DESCRIPTION |
| DATE: 01/22/2021 | REVISIONS | | | |

CDOT CHICAGO DEPARTMENT OF TRANSPORTATION

C*NECT

EROSION CONTROL PLAN
S. RICHARDS DR.

JACKSON PARK MOBILITY IMPROVEMENTS

STA. 9019+50 TO STA. 9023+58

| | | |
|---|---|---|
| CONTRACT NO. - | TOTAL SHEETS 1434 | SHEET NO. 591 |
| PROJECT NO. B-7-203 | DRAWING NO. EC-25 | |
| SCALE: 1"=20' | | |

LEGEND

EROSION CONTROL BLANKET; TEMPORARY SEEDING

EROSION CONTROL BLANKET; TEMPORARY SEEDING SPECIAL; GLFER AREAS TEMPORARY IMPACT

GLFER AREAS PERMANENT IMPACT

PERIMETER EROSION BARRIER

INLET FILTER

TREE MAINTENANCE (ROOT PRUNING)

20 0 20 40
SCALE IN FEET

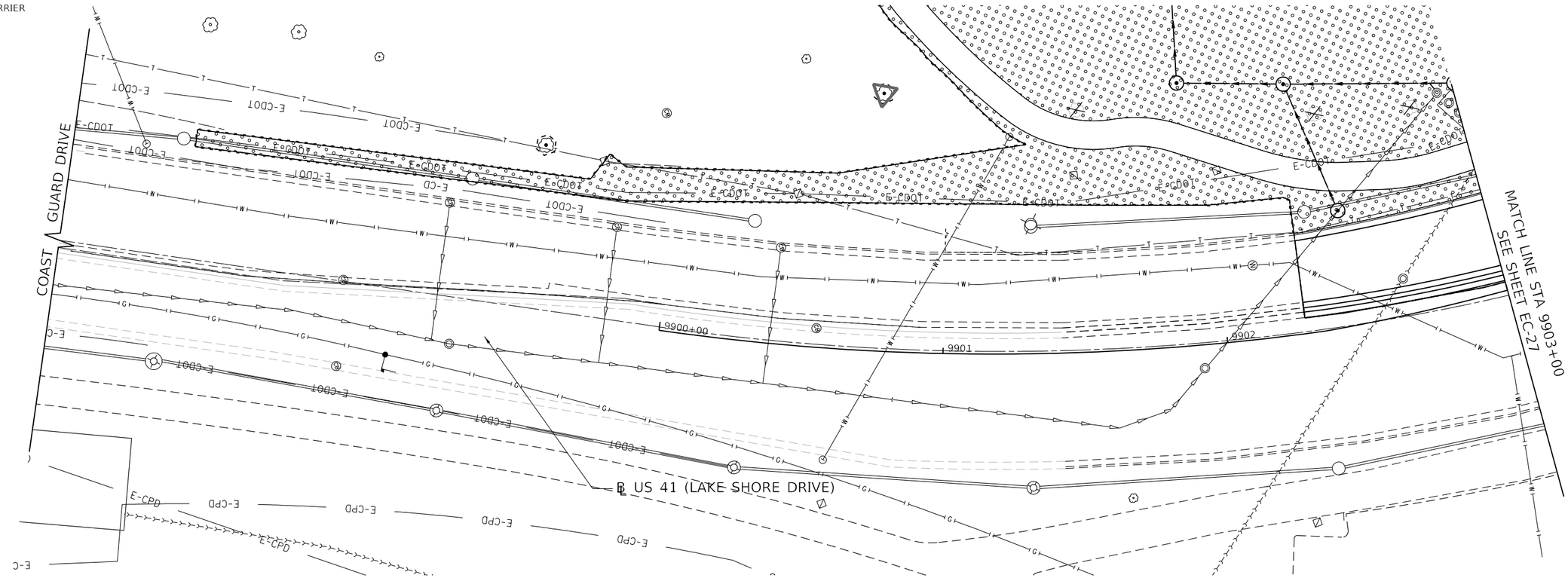


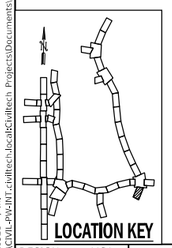


NOTES:

1. LOCATIONS FOR CONCRETE WASHOUTS AND STABILIZED CONSTRUCTION ENTRANCES TO BE DETERMINED BY THE CONTRACTOR AND APPROVED BY THE ENGINEER.
2. ANY REQUIRED STOCKPILING MUST HAVE APPROPRIATE TEMPORARY EROSION CONTROL MEASURES IN PLACE.

| | | | | |
|---|---|---|---|---|
| DESIGN: MSA | | | | |
| DRAWN: MSA | | | | |
| CHECKED: TKL | | | | |
| APPROVED: | NO. | BY | DATE | DESCRIPTION |
| DATE: 01/22/2021 | REVISIONS | | | |

CDOT CHICAGO DEPARTMENT OF TRANSPORTATION

C*NECT

**EROSION CONTROL PLAN**
**S. LAKE SHORE DR.**

**JACKSON PARK MOBILITY IMPROVEMENTS**

STA. 9900+00 TO STA. 9903+00

| | | | |
|---|---|---|---|
| CONTRACT NO. - | | TOTAL SHEETS 1434 | SHEET NO. 592 |
| PROJECT NO. B-7-203 | | DRAWING NO. EC-26 | |
| SCALE: 1"=20' | | | |

PLOT DATE: 5/17/2021
PLOT SCALE: 40.0528 ' / in.
FILE NAME: pw:\\CIVIL-PW-INT.civiltech.local:CivilTech Projects\Documents\Projects\3153\CAD\Sheets\EC\26-plnpln\sht-ec-024.dgn

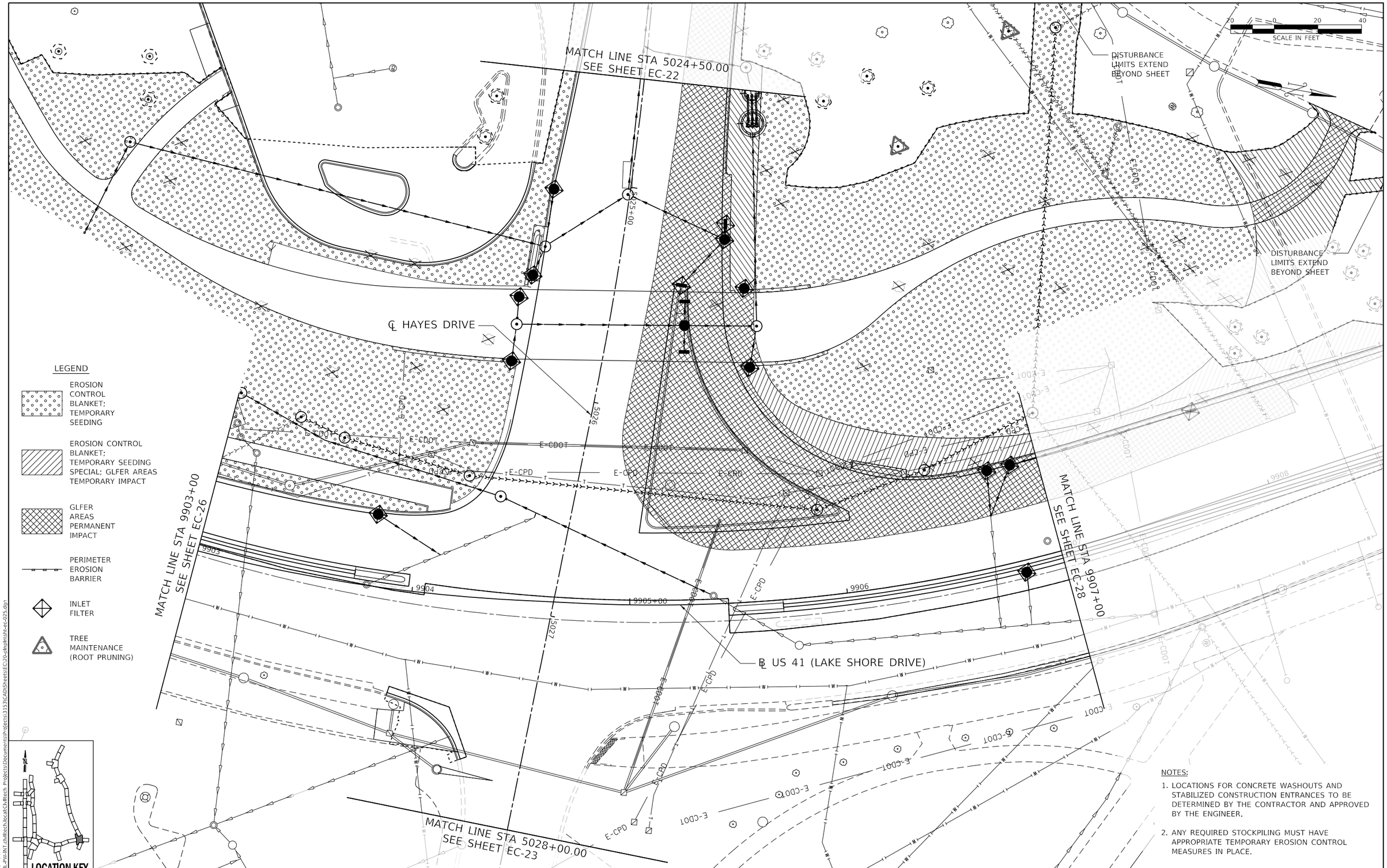


NOTES:

1. LOCATIONS FOR CONCRETE WASHOUTS AND STABILIZED CONSTRUCTION ENTRANCES TO BE DETERMINED BY THE CONTRACTOR AND APPROVED BY THE ENGINEER.
2. ANY REQUIRED STOCKPILING MUST HAVE APPROPRIATE TEMPORARY EROSION CONTROL MEASURES IN PLACE.

PLOT DATE: 5/17/2021
PLOT SCALE: 40.0000 ' / in.
FILE NAME: pw:\\CIVIL-PW-INT.civiltech.local:Civiltech Projects\Documents\Projects\3153\CAD\Sheets\EC\20-plnplnsht-ec-025.dgn

| | | | | |
|---|---|---|---|---|
| DESIGN: MSA | | | | |
| DRAWN: MSA | | | | |
| CHECKED: TKL | | | | |
| APPROVED: | NO. | BY | DATE | DESCRIPTION |
| DATE: 01/22/2021 | REVISIONS | | | |

CDOT CHICAGO DEPARTMENT OF TRANSPORTATION

C*NECT

EROSION CONTROL PLAN
S. LAKE SHORE DR.

JACKSON PARK MOBILITY IMPROVEMENTS

STA. 9903+00 TO STA. 9907+00

| | | |
|---|---|---|
| CONTRACT NO. - | TOTAL SHEETS 1434 | SHEET NO. 593 |
| PROJECT NO. B-7-203 | DRAWING NO. EC-27 | |
| SCALE: 1"=20' | | |

LEGEND

- EROSION CONTROL BLANKET; TEMPORARY SEEDING
- EROSION CONTROL BLANKET; TEMPORARY SEEDING SPECIAL; GLFER AREAS TEMPORARY IMPACT
- GLFER AREAS PERMANENT IMPACT
- PERIMETER EROSION BARRIER
- INLET FILTER
- TREE MAINTENANCE (ROOT PRUNING)

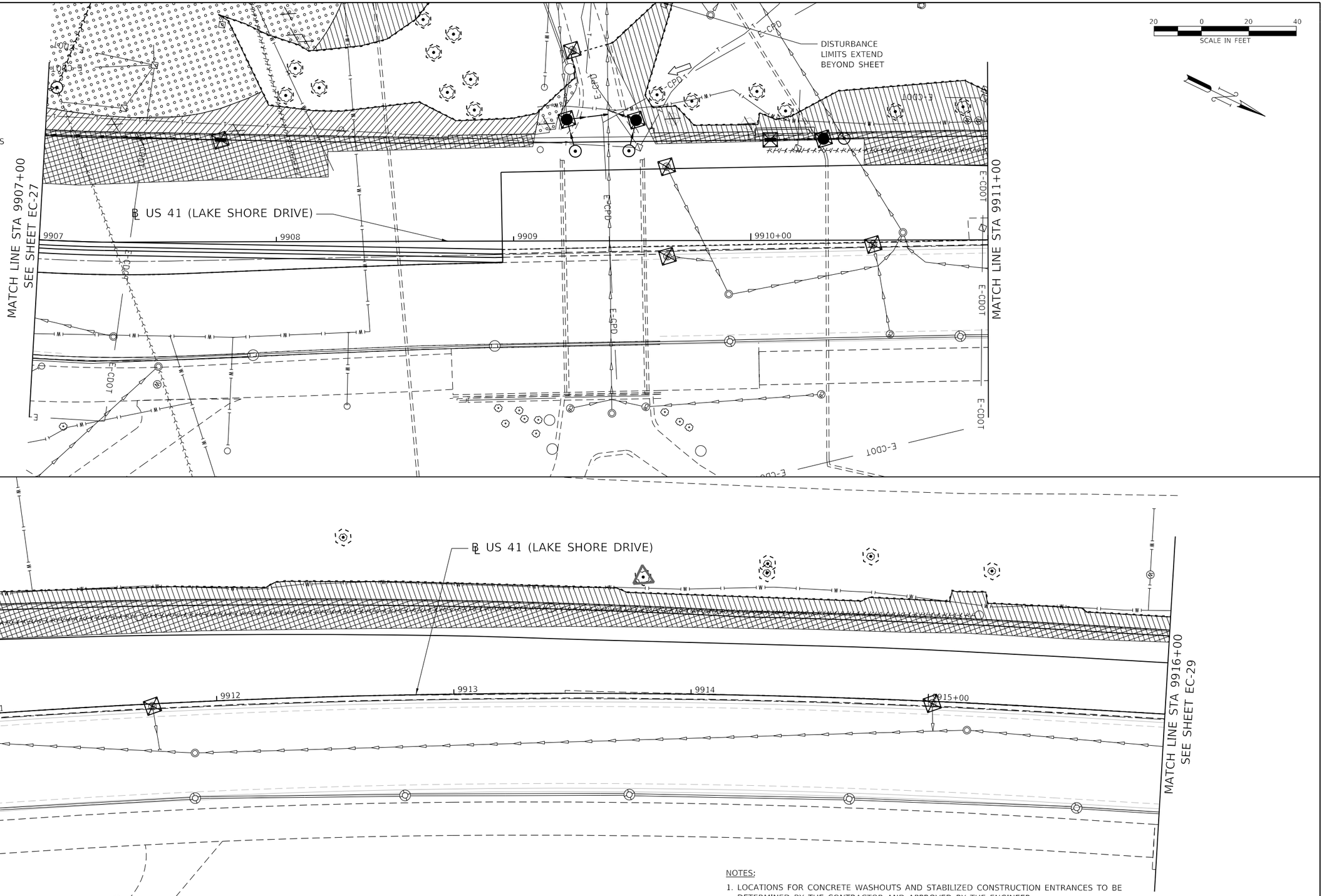


NOTES:

1. LOCATIONS FOR CONCRETE WASHOUTS AND STABILIZED CONSTRUCTION ENTRANCES TO BE DETERMINED BY THE CONTRACTOR AND APPROVED BY THE ENGINEER.
2. ANY REQUIRED STOCKPILING MUST HAVE APPROPRIATE TEMPORARY EROSION CONTROL MEASURES IN PLACE.

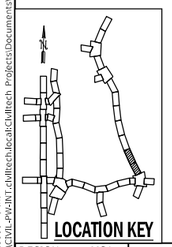

LOCATION KEY

| | | | | | |
|---|---|---|---|---|---|
| DESIGN: MSA | | | $REV3 | | |
| DRAWN: MSA | | | $REV2 | | |
| CHECKED: TKL | | | $REV1 | | |
| APPROVED: | NO. | BY | DATE | DESCRIPTION | |
| DATE: 03/29/2021 | REVISIONS | | | | |

CDOT CHICAGO DEPARTMENT OF TRANSPORTATION

C*NECT

**EROSION CONTROL PLAN**
**S. LAKE SHORE DR.**

**JACKSON PARK MOBILITY IMPROVEMENTS**

STA. 9907+00 TO STA. 9916+00

| | |
|---|---|
| CONTRACT NO. - | TOTAL SHEETS 1434 |
| PROJECT NO. B-7-203 | SHEET NO. 594 |
| SCALE: 1"=20' | DRAWING NO. EC-28 |

PLOT DATE: 5/17/2021
PLOT SCALE: 40.0000 ' / in.
FILE NAME: pw:\\CTVL-PW-INT.cityofchicago.org:CityofChicago Projects\Documents\Projects\3133\CADD\Sheets\EC\20-dlnolnlnt-ec-026.dgn

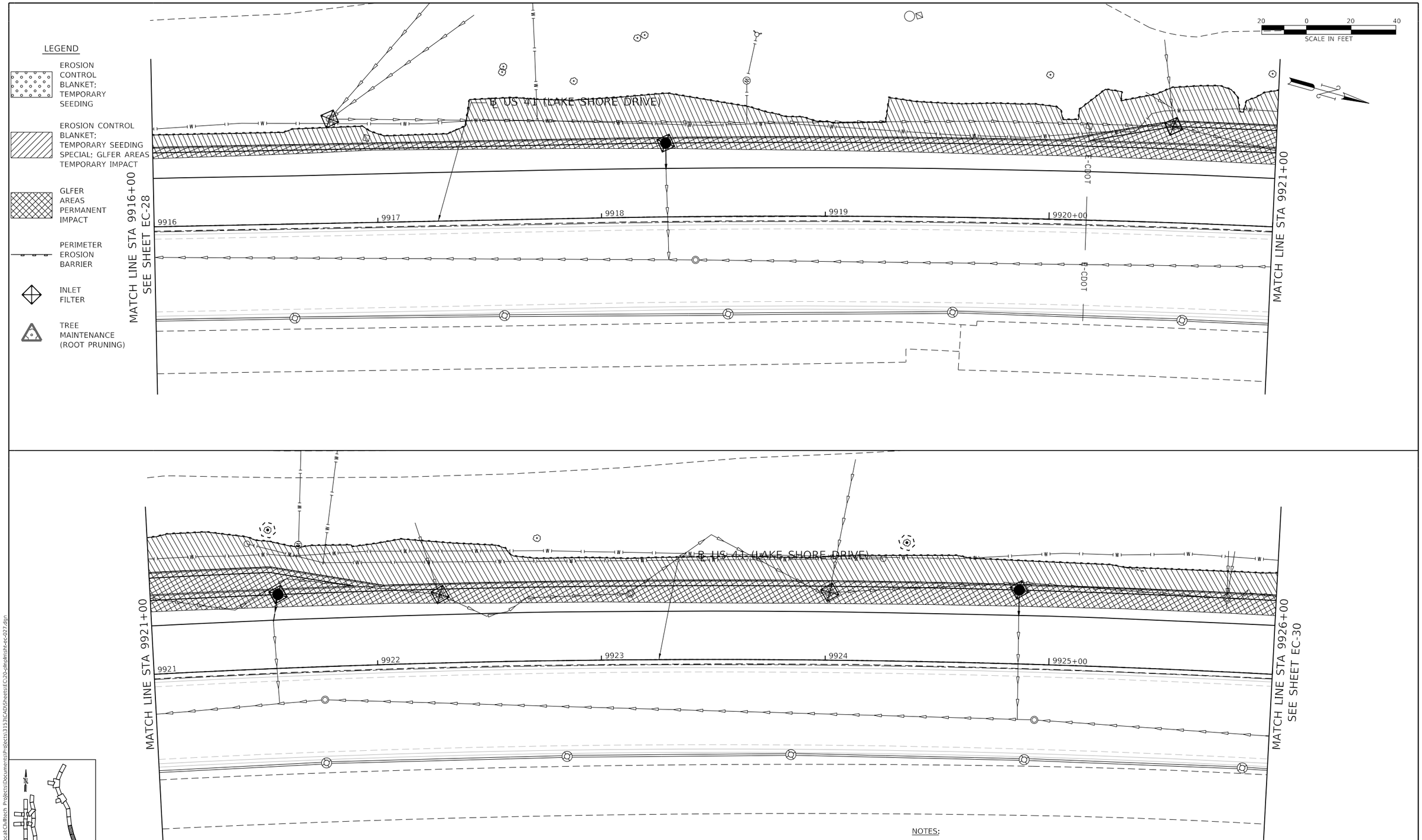


NOTES:

1. LOCATIONS FOR CONCRETE WASHOUTS AND STABILIZED CONSTRUCTION ENTRANCES TO BE DETERMINED BY THE CONTRACTOR AND APPROVED BY THE ENGINEER.
2. ANY REQUIRED STOCKPILING MUST HAVE APPROPRIATE TEMPORARY EROSION CONTROL MEASURES IN PLACE.

PLOT DATE: 5/17/2021
PLOT SCALE: 40.0000 ' / in.
FILE NAME: pw:\\CIVIL-PW-INT.civiltech.local:Civiltech Projects\Documents\Projects\3153\CAD\Sheets\EC\20-plnpln\sht-ec-027.dgn

| | | | | | |
|---|---|---|---|---|---|
| DESIGN: MSA | | | $REV3 | | |
| DRAWN: MSA | | | $REV2 | | |
| CHECKED: TKL | | | $REV1 | | |
| APPROVED: | NO. | BY | DATE | DESCRIPTION | |
| DATE: 01/22/2021 | REVISIONS | | | | |

CDOT CHICAGO DEPARTMENT OF TRANSPORTATION

C*NECT

EROSION CONTROL PLAN
S. LAKE SHORE DR.

JACKSON PARK MOBILITY IMPROVEMENTS

STA. 9916+00 TO STA. 9926+00

| | | |
|---|---|---|
| CONTRACT NO. - | TOTAL SHEETS 1434 | SHEET NO. 595 |
| PROJECT NO. B-7-203 | DRAWING NO. EC-29 | |
| SCALE: 1"=20' | | |

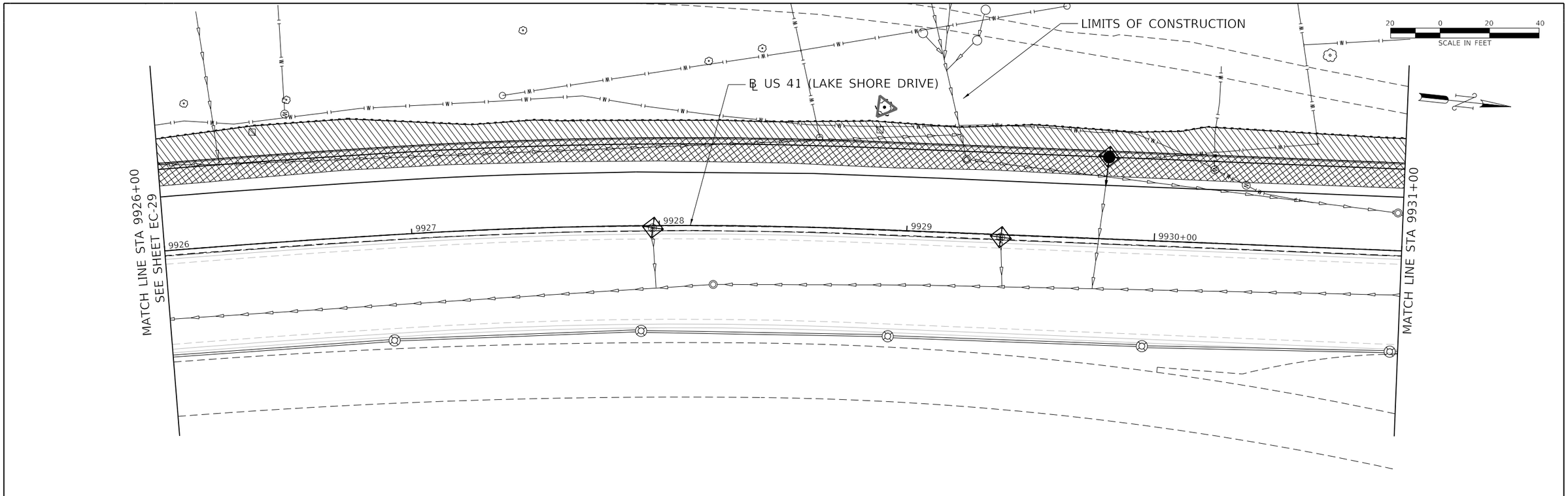


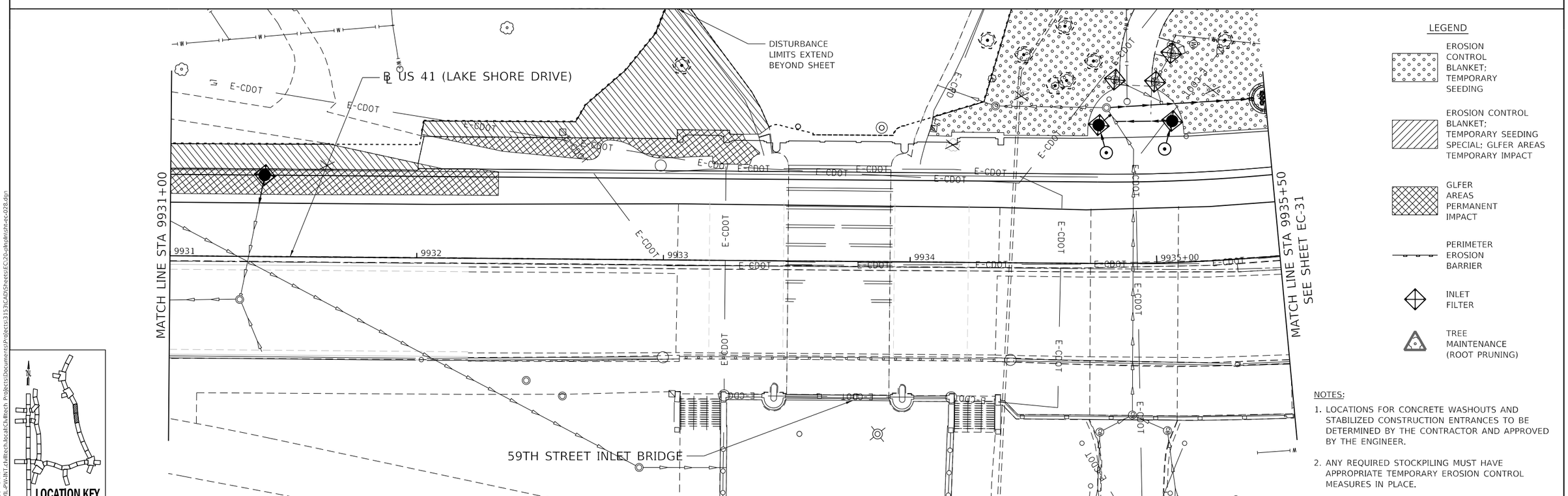


LEGEND

- EROSION CONTROL BLANKET; TEMPORARY SEEDING
- EROSION CONTROL BLANKET; TEMPORARY SEEDING SPECIAL; GLFER AREAS TEMPORARY IMPACT
- GLFER AREAS PERMANENT IMPACT
- PERIMETER EROSION BARRIER
- INLET FILTER
- TREE MAINTENANCE (ROOT PRUNING)

NOTES:

1. LOCATIONS FOR CONCRETE WASHOUTS AND STABILIZED CONSTRUCTION ENTRANCES TO BE DETERMINED BY THE CONTRACTOR AND APPROVED BY THE ENGINEER.
2. ANY REQUIRED STOCKPILING MUST HAVE APPROPRIATE TEMPORARY EROSION CONTROL MEASURES IN PLACE.




| | | | | | |
|---|---|---|---|---|---|
| DESIGN: | MSA | | | $REV3 | |
| DRAWN: | MSA | | | $REV2 | |
| CHECKED: | TKL | | | $REV1 | |
| APPROVED: | | NO. | BY | DATE | DESCRIPTION |
| DATE: 01/22/2021 | | REVISIONS | | | |

CDOT CHICAGO DEPARTMENT OF TRANSPORTATION

C*NECT

EROSION CONTROL PLAN
S. LAKE SHORE DR.

JACKSON PARK MOBILITY IMPROVEMENTS

STA. 9926+00 TO STA. 9935+50

| | | |
|---|---|---|
| CONTRACT NO. - | TOTAL SHEETS 1434 | SHEET NO. 596 |
| PROJECT NO. B-7-203 | DRAWING NO. EC-30 | |
| SCALE: 1"=20' | | |

PLOT DATE: 5/17/2021
PLOT SCALE: 40.0000 ' / in.
FILE NAME: pw:\\CIVIL-PW-INT.civiltech.local:Civiltech Projects\Documents\Projects\3153\CAD\Sheets\EC\20-plnpln\sht-ec-028.dgn

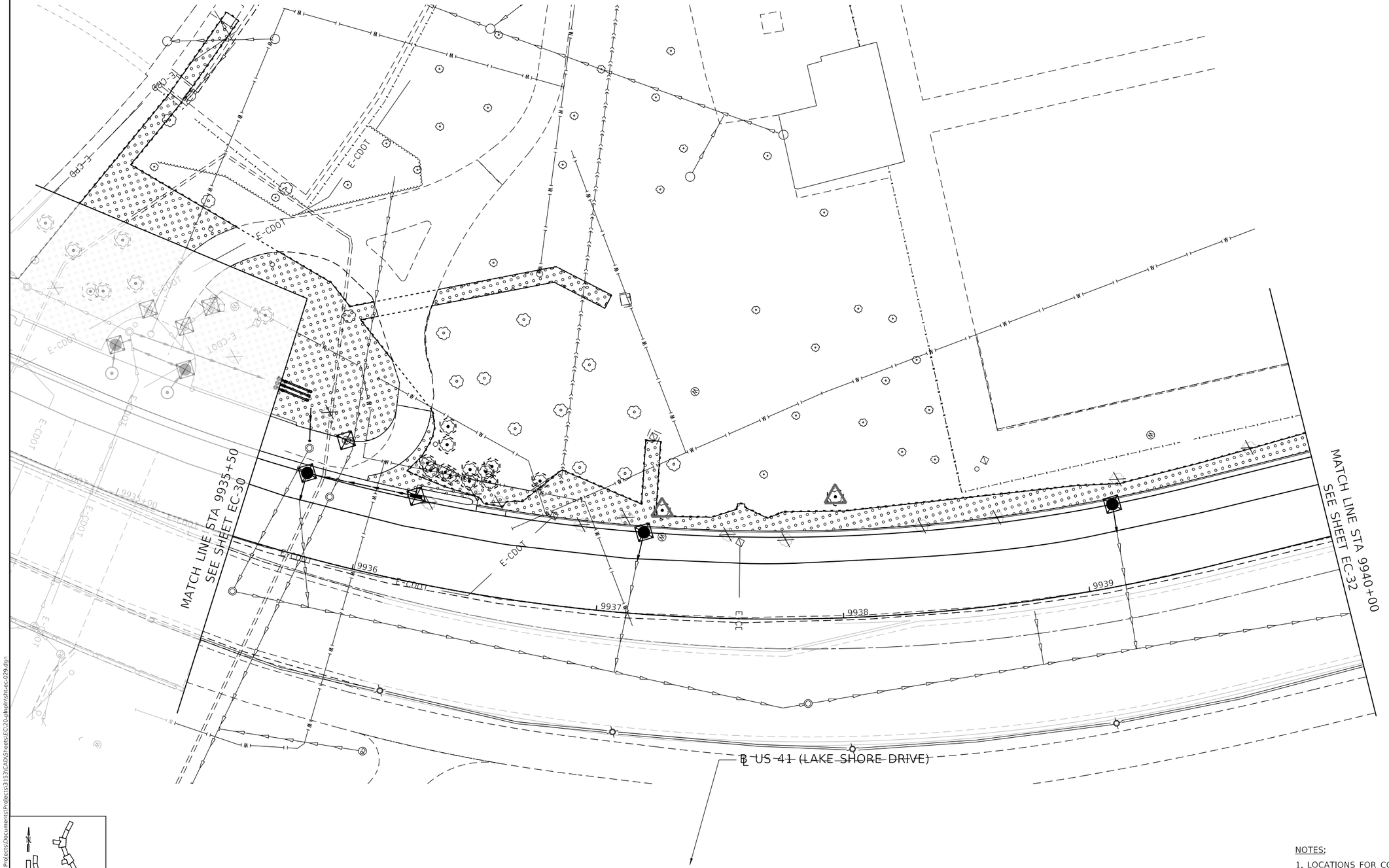


20 0 20 40
SCALE IN FEET

LEGEND

- EROSION CONTROL BLANKET; TEMPORARY SEEDING
- EROSION CONTROL BLANKET; TEMPORARY SEEDING SPECIAL; GLFER AREAS TEMPORARY IMPACT
- GLFER AREAS PERMANENT IMPACT
- PERIMETER EROSION BARRIER
- INLET FILTER
- TREE MAINTENANCE (ROOT PRUNING)

NOTES:

1. LOCATIONS FOR CONCRETE WASHOUTS AND STABILIZED CONSTRUCTION ENTRANCES TO BE DETERMINED BY THE CONTRACTOR AND APPROVED BY THE ENGINEER.
2. ANY REQUIRED STOCKPILING MUST HAVE APPROPRIATE TEMPORARY EROSION CONTROL MEASURES IN PLACE.

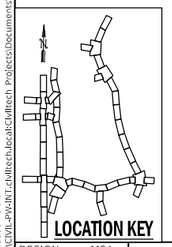


| | | | | |
|---|---|---|---|---|
| DESIGN: MSA | | | | |
| DRAWN: MSA | | | | |
| CHECKED: TKL | | | | |
| APPROVED: | NO. | BY | DATE | DESCRIPTION |
| DATE: 01/22/2021 | REVISIONS | | | |

CDOT CHICAGO DEPARTMENT OF TRANSPORTATION

C*NECT

EROSION CONTROL PLAN
S. LAKE SHORE DR.

JACKSON PARK MOBILITY IMPROVEMENTS

STA. 9935+50 TO STA. 9940+00

| | | |
|---|---|---|
| CONTRACT NO. - | TOTAL SHEETS | SHEET NO. |
| PROJECT NO. B-7-203 | 1434 | 597 |
| SCALE: 1"=20' | DRAWING NO. EC-31 | |

PLOT DATE: 5/17/2021
PLOT SCALE: 40.0000 ' / in.
FILE NAME: pw:\\CWIL-PW-INT.civiltech.local\Civiltech Projects\Documents\Projects\3153\CADdSheets\EC20-plnplnsht-ec-029.dgn

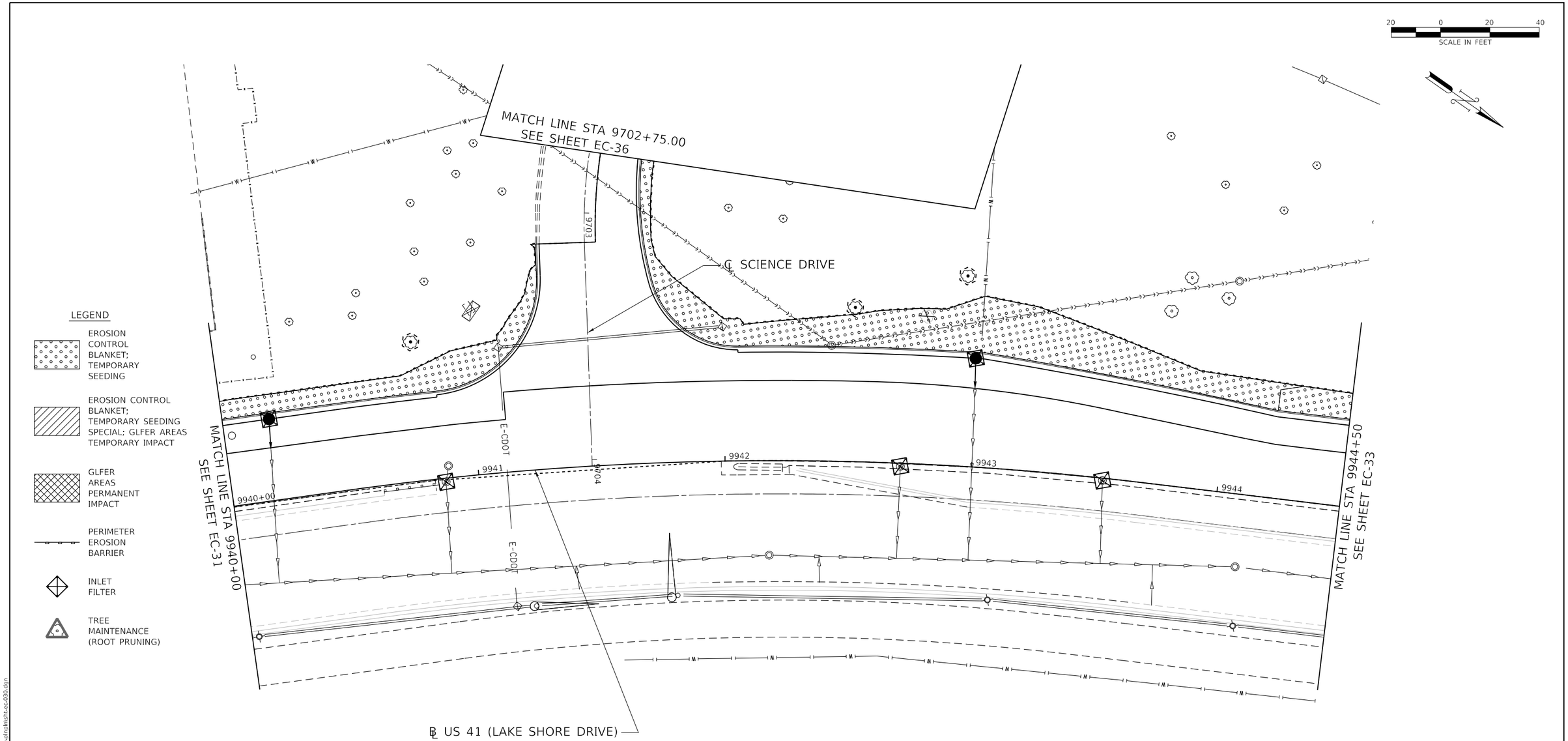


NOTES:

1. LOCATIONS FOR CONCRETE WASHOUTS AND STABILIZED CONSTRUCTION ENTRANCES TO BE DETERMINED BY THE CONTRACTOR AND APPROVED BY THE ENGINEER.
2. ANY REQUIRED STOCKPILING MUST HAVE APPROPRIATE TEMPORARY EROSION CONTROL MEASURES IN PLACE.

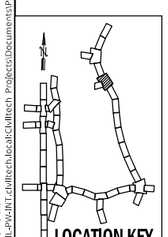


PLOT DATE: 5/17/2021
PLOT SCALE: 40.0000 ' / in.
FILE NAME: pw:\\CIVIL-PW-INT.civiltech.local:Civiltech Projects\Documents\Projects\3153\CAD\Sheets\EC\20-plnpln\sht-ec-030.dgn

| | | | | |
|---|---|---|---|---|
| DESIGN: MSA | | | | |
| DRAWN: MSA | | | | |
| CHECKED: TKL | | | | |
| APPROVED: | NO. | BY | DATE | DESCRIPTION |
| DATE: 01/22/2021 | REVISIONS | | | |

CDOT CHICAGO DEPARTMENT OF TRANSPORTATION

C*NECT

EROSION CONTROL PLAN
S. LAKE SHORE DR.

JACKSON PARK MOBILITY IMPROVEMENTS

STA. 9940+00 TO STA. 9944+50

| | | |
|---|---|---|
| CONTRACT NO. - | TOTAL SHEETS 1434 | SHEET NO. 598 |
| PROJECT NO. B-7-203 | DRAWING NO. EC-32 | |
| SCALE: 1"=20' | | |

LEGEND

- EROSION CONTROL BLANKET; TEMPORARY SEEDING
- EROSION CONTROL BLANKET; TEMPORARY SEEDING SPECIAL; GLFER AREAS TEMPORARY IMPACT
- GLFER AREAS PERMANENT IMPACT
- PERIMETER EROSION BARRIER
- INLET FILTER
- TREE MAINTENANCE (ROOT PRUNING)

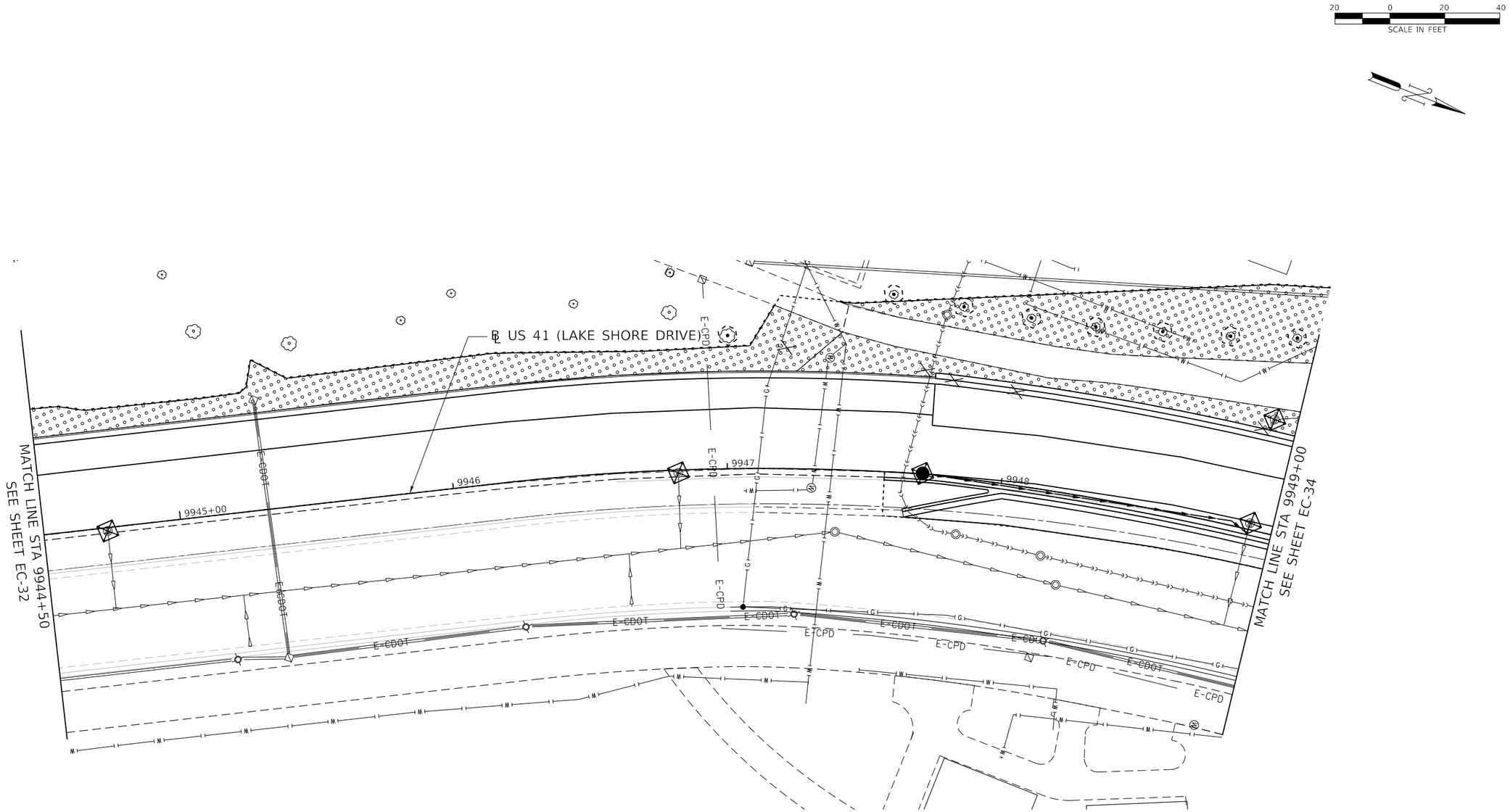


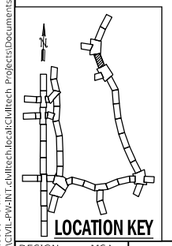


LOCATION KEY

NOTES:

1. LOCATIONS FOR CONCRETE WASHOUTS AND STABILIZED CONSTRUCTION ENTRANCES TO BE DETERMINED BY THE CONTRACTOR AND APPROVED BY THE ENGINEER.
2. ANY REQUIRED STOCKPILING MUST HAVE APPROPRIATE TEMPORARY EROSION CONTROL MEASURES IN PLACE.

PLOT DATE: 5/17/2021
PLOT SCALE: 40.0000 ' / in.
FILE NAME: pw:\\CIVIL-PW-INT.civiltech.local:Civiltech Projects\Documents\Projects\3153\CAD\Sheets\EC\20-plnpln\sht-ec-031.dgn

| | | | | |
|---|---|---|---|---|
| DESIGN: MSA | | | | |
| DRAWN: MSA | | | | |
| CHECKED: TKL | | | | |
| APPROVED: | NO. | BY | DATE | DESCRIPTION |
| DATE: 01/22/2021 | REVISIONS | | | |

CDOT CHICAGO DEPARTMENT OF TRANSPORTATION

C*NECT

EROSION CONTROL PLAN
S. LAKE SHORE DR.

JACKSON PARK MOBILITY IMPROVEMENTS

STA. 9944+50 TO STA. 9949+00

| | | |
|---|---|---|
| CONTRACT NO. - | TOTAL SHEETS 1434 | SHEET NO. 599 |
| PROJECT NO. B-7-203 | DRAWING NO. EC-33 | |
| SCALE: 1"=20' | | |

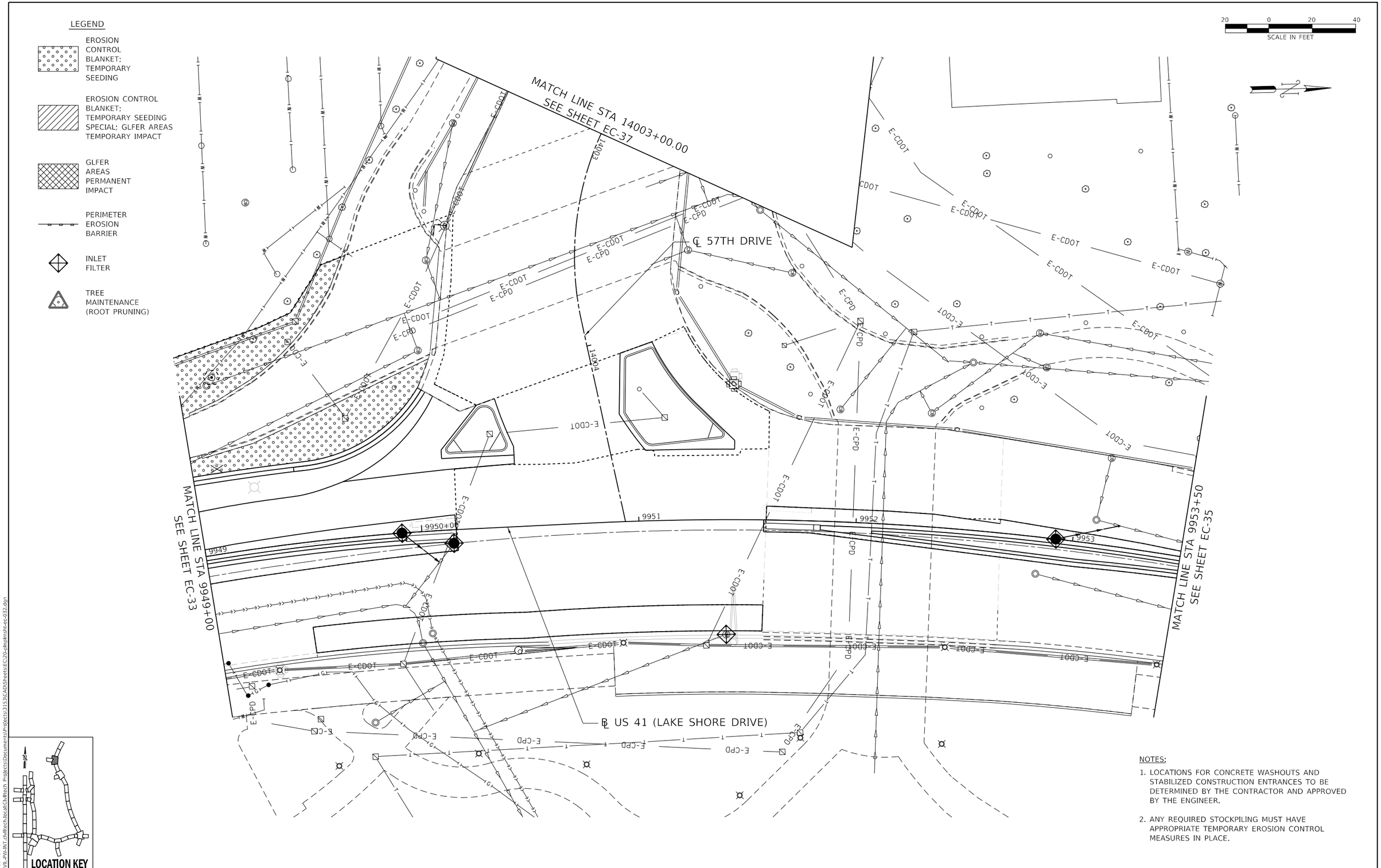


NOTES:

1. LOCATIONS FOR CONCRETE WASHOUTS AND STABILIZED CONSTRUCTION ENTRANCES TO BE DETERMINED BY THE CONTRACTOR AND APPROVED BY THE ENGINEER.
2. ANY REQUIRED STOCKPILING MUST HAVE APPROPRIATE TEMPORARY EROSION CONTROL MEASURES IN PLACE.

PLOT DATE: 5/17/2021
PLOT SCALE: 40.0000 ' / in.
FILE NAME: pw:\\CIVIL-PW-INT.civiltech.local:Civiltech Projects\Documents\Projects\3153\CAD\Sheets\EC\20-plnpln\sht-ec-032.dgn

| | | | | |
|---|---|---|---|---|
| DESIGN: MSA | | | | |
| DRAWN: MSA | | | | |
| CHECKED: TKL | | | | |
| APPROVED: | NO. | BY | DATE | DESCRIPTION |
| DATE: 01/22/2021 | REVISIONS | | | |

CDOT CHICAGO DEPARTMENT OF TRANSPORTATION

C*NECT

EROSION CONTROL PLAN
S. LAKE SHORE DR.

JACKSON PARK MOBILITY IMPROVEMENTS

STA. 9949+00 TO STA. 9953+50

| | | |
|---|---|---|
| CONTRACT NO. - | TOTAL SHEETS 1434 | SHEET NO. 600 |
| PROJECT NO. B-7-203 | DRAWING NO. EC-34 | |
| SCALE: 1"=20' | | |

LEGEND

- EROSION CONTROL BLANKET; TEMPORARY SEEDING
- EROSION CONTROL BLANKET; TEMPORARY SEEDING SPECIAL; GLFER AREAS TEMPORARY IMPACT
- GLFER AREAS PERMANENT IMPACT
- PERIMETER EROSION BARRIER
- INLET FILTER
- TREE MAINTENANCE (ROOT PRUNING)

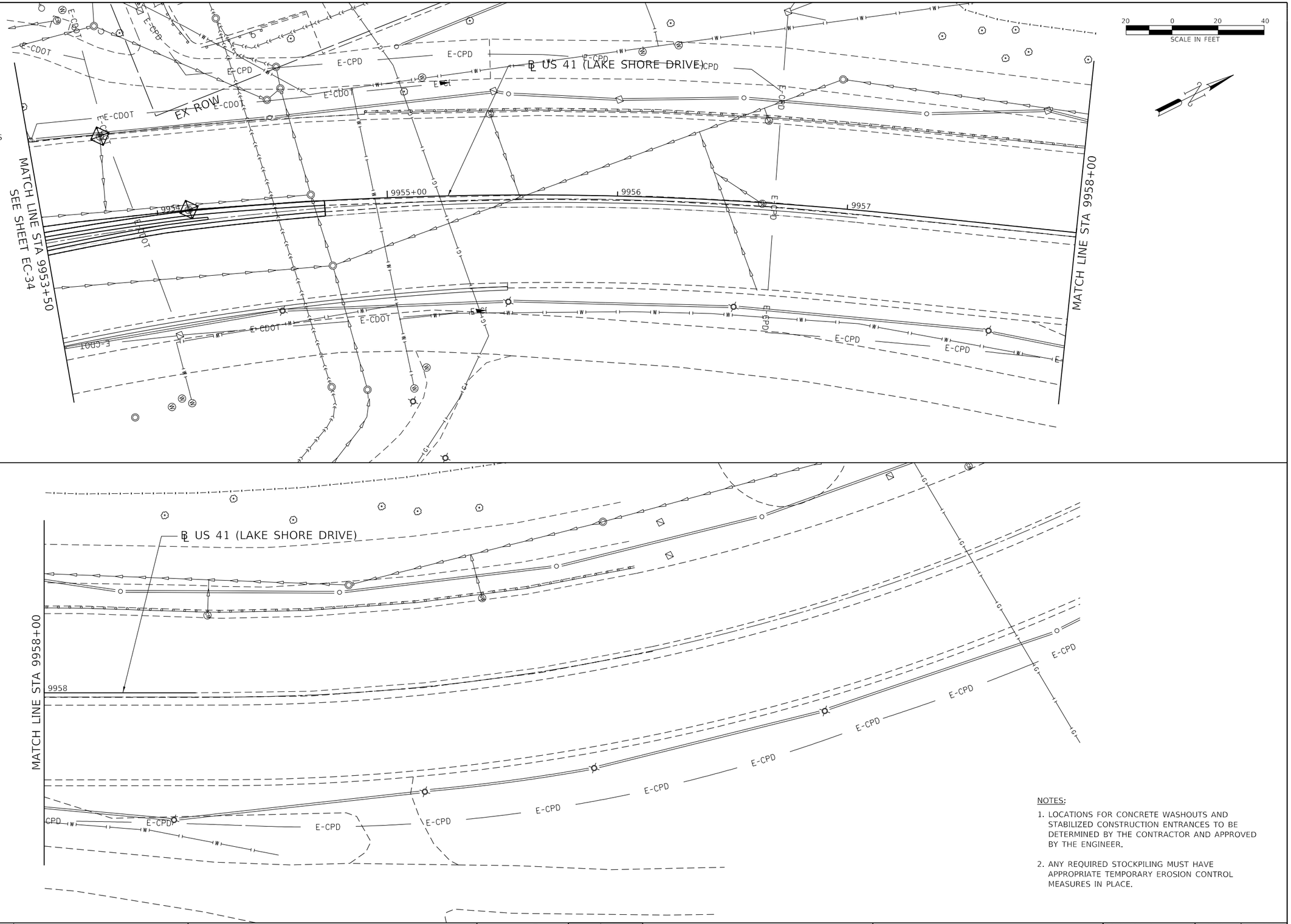


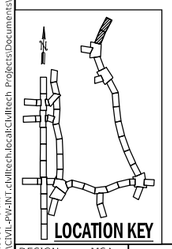


NOTES:

1. LOCATIONS FOR CONCRETE WASHOUTS AND STABILIZED CONSTRUCTION ENTRANCES TO BE DETERMINED BY THE CONTRACTOR AND APPROVED BY THE ENGINEER.
2. ANY REQUIRED STOCKPILING MUST HAVE APPROPRIATE TEMPORARY EROSION CONTROL MEASURES IN PLACE.

| | | | | | |
|---|---|---|---|---|---|
| DESIGN: MSA | | | $REV3 | | |
| DRAWN: MSA | | | $REV2 | | |
| CHECKED: TKL | | | $REV1 | | |
| APPROVED: | NO. | BY | DATE | DESCRIPTION | |
| DATE: 01/22/2021 | REVISIONS | | | | |

CHICAGO DEPARTMENT OF TRANSPORTATION

C*NECT

EROSION CONTROL PLAN
S. LAKE SHORE DR.

JACKSON PARK MOBILITY IMPROVEMENTS

STA. 9953+50 TO STA. 9958+50

| | | |
|---|---|---|
| CONTRACT NO. - | TOTAL SHEETS 1434 | SHEET NO. 601 |
| PROJECT NO. B-7-203 | DRAWING NO. EC-35 | |
| SCALE: 1"=20' | | |

PLOT DATE: 5/17/2021
PLOT SCALE: 40.0000 ' / in.
FILE NAME: pw:\\CIVIL-PW-2NT.cdot.tech.local\CivilTech Projects\Documents\Projects\3153\CADD\Sheets\EC20-allnoMvmt-ec-033.dgn

LEGEND

- EROSION CONTROL BLANKET; TEMPORARY SEEDING
- EROSION CONTROL BLANKET; TEMPORARY SEEDING SPECIAL; GLFER AREAS TEMPORARY IMPACT
- GLFER AREAS PERMANENT IMPACT
- PERIMETER EROSION BARRIER
- INLET FILTER
- TREE MAINTENANCE (ROOT PRUNING)

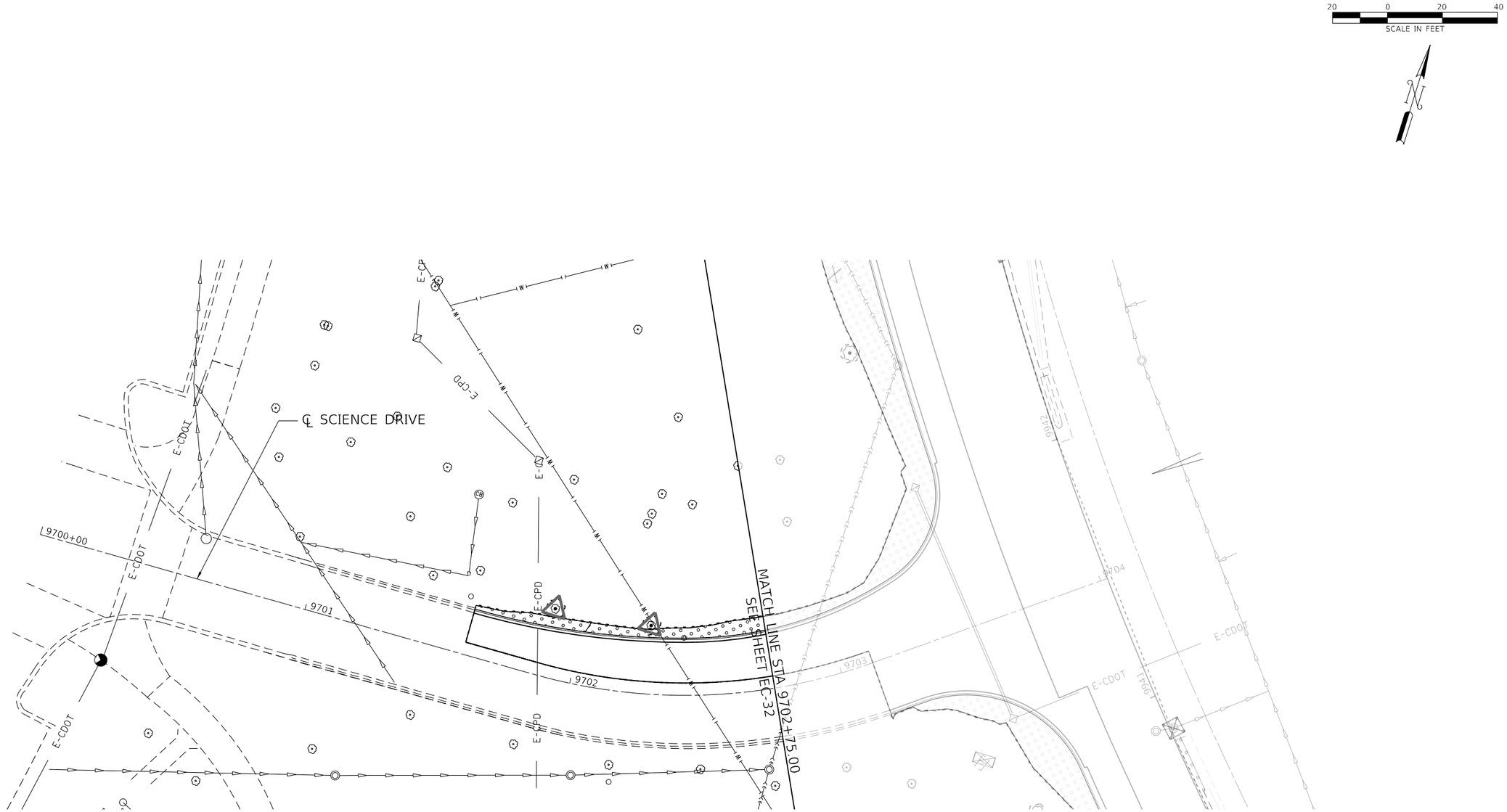


NOTES:

1. LOCATIONS FOR CONCRETE WASHOUTS AND STABILIZED CONSTRUCTION ENTRANCES TO BE DETERMINED BY THE CONTRACTOR AND APPROVED BY THE ENGINEER.
2. ANY REQUIRED STOCKPILING MUST HAVE APPROPRIATE TEMPORARY EROSION CONTROL MEASURES IN PLACE.

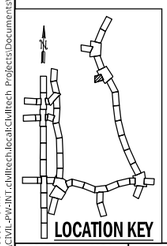
LOCATION KEY

PLOT DATE: 5/17/2021
PLOT SCALE: 40.0000 ' / in.
FILE NAME: pw:\\CIVIL-PW-INT.civiltech.local:Civiltech Projects\Documents\Projects\3153\CAD\Sheets\EC\20-plnpln\sht-ec-034.dgn

| | | | | |
|---|---|---|---|---|
| DESIGN: MSA | | | | |
| DRAWN: MSA | | | | |
| CHECKED: TKL | | | | |
| APPROVED: | NO. | BY | DATE | DESCRIPTION |
| DATE: 01/22/2021 | REVISIONS | | | |

CDOT CHICAGO DEPARTMENT OF TRANSPORTATION

C*NECT

EROSION CONTROL PLAN
E. SCIENCE DR.

JACKSON PARK MOBILITY IMPROVEMENTS

STA. 9700+00 TO STA. 9702+50

| | | |
|---|---|---|
| CONTRACT NO. - | TOTAL SHEETS 1434 | SHEET NO. 602 |
| PROJECT NO. B-7-203 | DRAWING NO. EC-36 | |
| SCALE: 1"=20' | | |

20 0 20 40
SCALE IN FEET

LEGEND

- EROSION CONTROL BLANKET; TEMPORARY SEEDING
- EROSION CONTROL BLANKET; TEMPORARY SEEDING SPECIAL; GLFER AREAS TEMPORARY IMPACT
- GLFER AREAS PERMANENT IMPACT
- PERIMETER EROSION BARRIER
- INLET FILTER
- TREE MAINTENANCE (ROOT PRUNING)

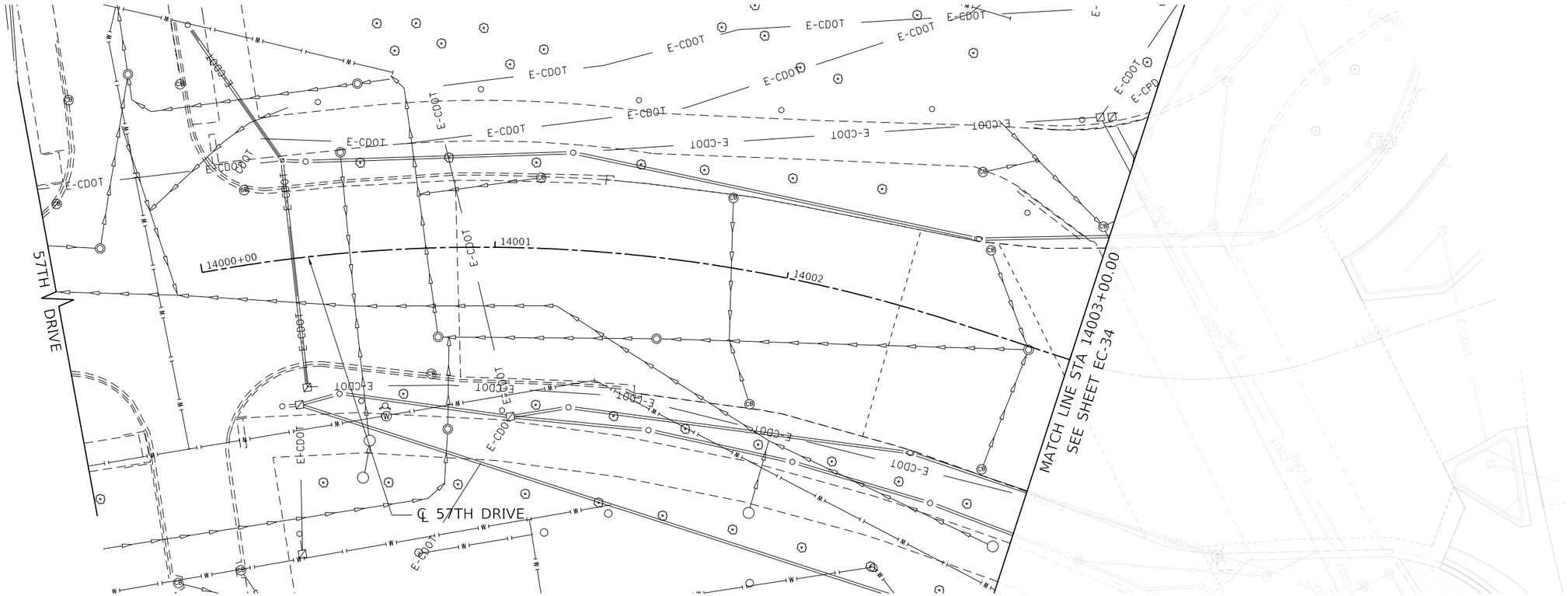


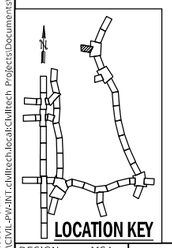
LOCATION KEY

NOTES:

1. LOCATIONS FOR CONCRETE WASHOUTS AND STABILIZED CONSTRUCTION ENTRANCES TO BE DETERMINED BY THE CONTRACTOR AND APPROVED BY THE ENGINEER.
2. ANY REQUIRED STOCKPILING MUST HAVE APPROPRIATE TEMPORARY EROSION CONTROL MEASURES IN PLACE.

PLOT DATE: 5/17/2021
PLOT SCALE: 40.0000 ' / in.
FILE NAME: pw:\\CIVIL-PW-INT.civiltech.local:Civiltech Projects\Documents\Projects\3153\CAD\Sheets\EC\20-plnplnsht-ec-035.dgn

| | | | | |
|---|---|---|---|---|
| DESIGN: MSA | | | | |
| DRAWN: MSA | | | | |
| CHECKED: TKL | | | | |
| APPROVED: | NO. | BY | DATE | DESCRIPTION |
| DATE: 01/22/2021 | REVISIONS | | | |

CDOT CHICAGO DEPARTMENT OF TRANSPORTATION

C*NECT

EROSION CONTROL PLAN
E. 57TH DR.

JACKSON PARK MOBILITY IMPROVEMENTS

STA. 14000+00 TO STA. 14003+00

| | | |
|---|---|---|
| CONTRACT NO. - | TOTAL SHEETS 1434 | SHEET NO. 603 |
| PROJECT NO. B-7-203 | DRAWING NO. EC-37 | |
| SCALE: 1"=20' | | |

LEGEND

- 6-INCHES BLACK EARTH WITH CLASS 1 (MODIFIED) SEEDING
- GLFER AREAS TEMPORARY IMPACT
- GLFER AREAS PERMANENT IMPACT
- TREE DRIP LINE
- TREE TRUNK PROTECTION
- TREE REMOVAL (SEE TREE REMOVAL SCHEDULE)
- LIMITS OF CONSTRUCTION
- SODDING, SALT TOLERANT

20 0 20 40
SCALE IN FEET

E 65TH PLACE

℄ STONY ISLAND AVENUE

EX ROW

STONY ISLAND AVENUE

214 215+00 216 217 218

8000 7200+00

701 8001

EX ROW

MATCH LINE STA 219+00

E-CDOT E-CPD E-CDOT E-CPD E-CPD E-CPD

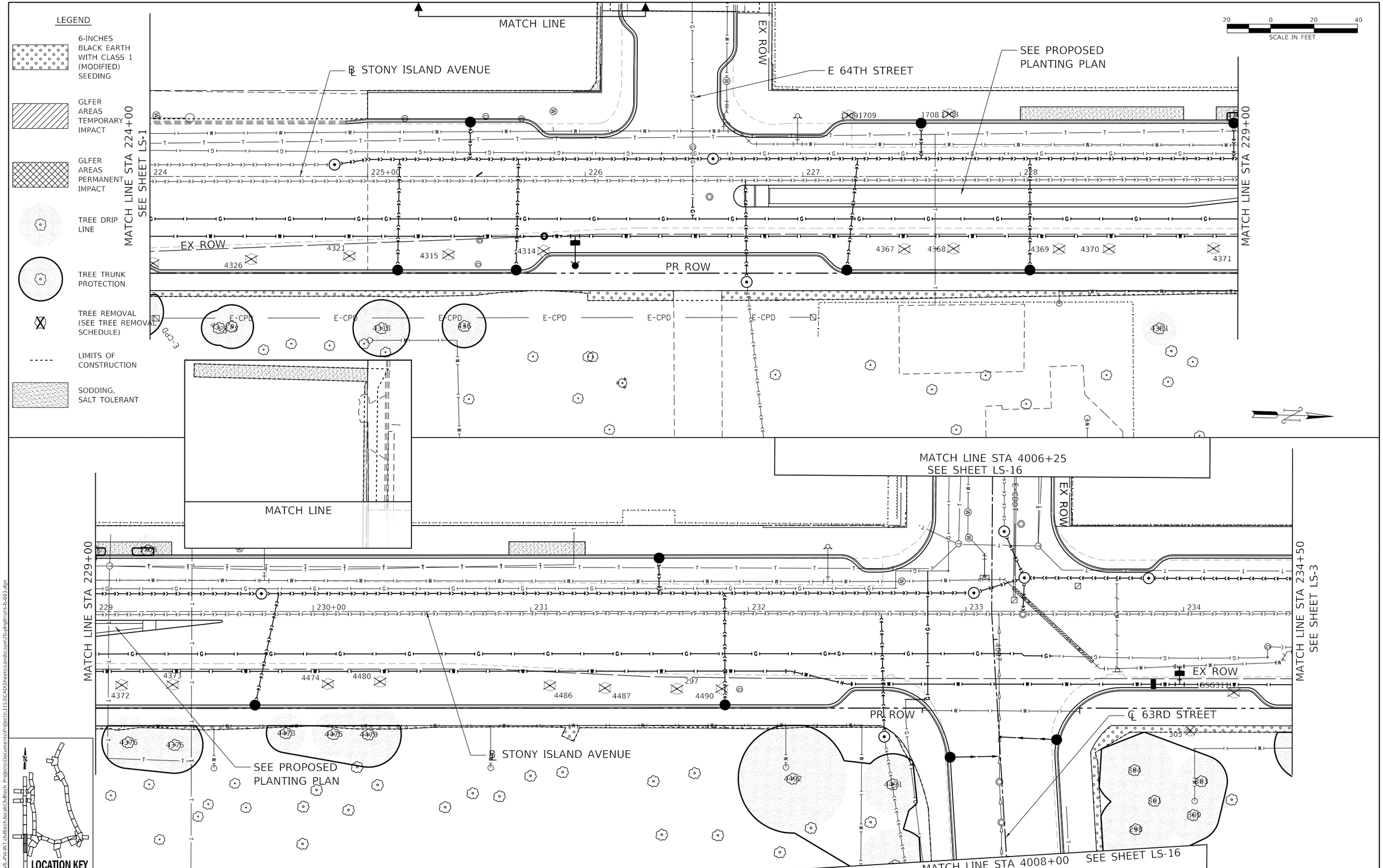


| | | | | |
|---|---|---|---|---|
| DESIGN: EML | | | SREV3 | |
| DRAWN: EML | | | SREV2 | |
| CHECKED: TKL | | | SREV1 | |
| APPROVED: | NO. | BY | DATE | DESCRIPTION |
| DATE: 01/22/2021 | REVISIONS | | | |

CDOT CHICAGO DEPARTMENT OF TRANSPORTATION

C*NECT

LANDSCAPING PLAN
TREE REMOVAL AND PROTECTION
S. STONY ISLAND AVE.

JACKSON PARK MOBILITY IMPROVEMENTS

STA. 224+00 TO STA. 234+50

| | | |
|---|---|---|
| CONTRACT NO. - | TOTAL SHEETS 1434 | SHEET NO. 605 |
| PROJECT NO. B-7-203 | DRAWING NO. LS-2 | |
| SCALE: 1"=20' | | |

PLOT DATE: 5/17/2021
PLOT SCALE: 40.0000 ' / in.
FILE NAME: pw:\\CIVIL-PW-INT.civiltech.local:Civiltech Projects\Documents\Projects\3153\CAD\Sheets\Landscape\20-plnpln\sht-ls-003.dgn

LEGEND

6-INCHES BLACK EARTH WITH CLASS 1 (MODIFIED) SEEDING

GLFER AREAS PERMANENT IMPACT

TREE TRUNK PROTECTION

LIMITS OF CONSTRUCTION

SODDING, SALT TOLERANT

GLFER AREAS TEMPORARY IMPACT

TREE DRIP LINE

TREE REMOVAL (SEE TREE REMOVAL SCHEDULE)

20 0 20 40
SCALE IN FEET

MATCH LINE STA 234+50
SEE SHEET LS-2

EX ROW

SEE PROPOSED PLANTING PLAN

℄ STONY ISLAND AVENUE

235+00 236 237 238 239

309 310 311 313 314 321 324 325 326 33 37298

PR ROW

MATCH LINE STA 240+00

E 62ND STREET

E-CD

E-CDOT

61ST STREET

EX ROW

SEE PROPOSED PLANTING PLAN

℄ STONY ISLAND AVENUE

240+00 241 242 243 244 245+00

338 339 340 34 350 351 352

344 346 347 348 349

PR ROW

OPC SITE BOUNDARY

OPC SITE BOUNDARY

MATCH LINE STA 245+50
SEE SHEET LS-4

LOCATION KEY

| | | | | |
|---|---|---|---|---|
| DESIGN: EML | | | $REV3 | |
| DRAWN: EML | | | $REV2 | |
| CHECKED: TKL | | | $REV1 | |
| APPROVED: | NO. | BY | DATE | DESCRIPTION |
| DATE: 03/29/2021 | REVISIONS | | | |

CDOT CHICAGO DEPARTMENT OF TRANSPORTATION

C*NECT

LANDSCAPING PLAN
TREE REMOVAL AND PROTECTION
S. STONY ISLAND AVE.

JACKSON PARK MOBILITY IMPROVEMENTS

STA. 234+50 TO STA. 245+50

| | |
|---|---|
| CONTRACT NO. - | TOTAL SHEETS 1434 / SHEET NO. 606 |
| PROJECT NO. B-7-203 | DRAWING NO. LS-3 |
| SCALE: 1"=20' | |

PLOT DATE: 5/17/2021
PLOT SCALE: 40.0000 ' / in.
FILE NAME: pw:\\CIVIL-PW-INT-civiltech.local\Civiltech Projects\Documents\Projects\3153\CADD\Sheets\Landscape\20-alnplnsht-ls-004.dgn

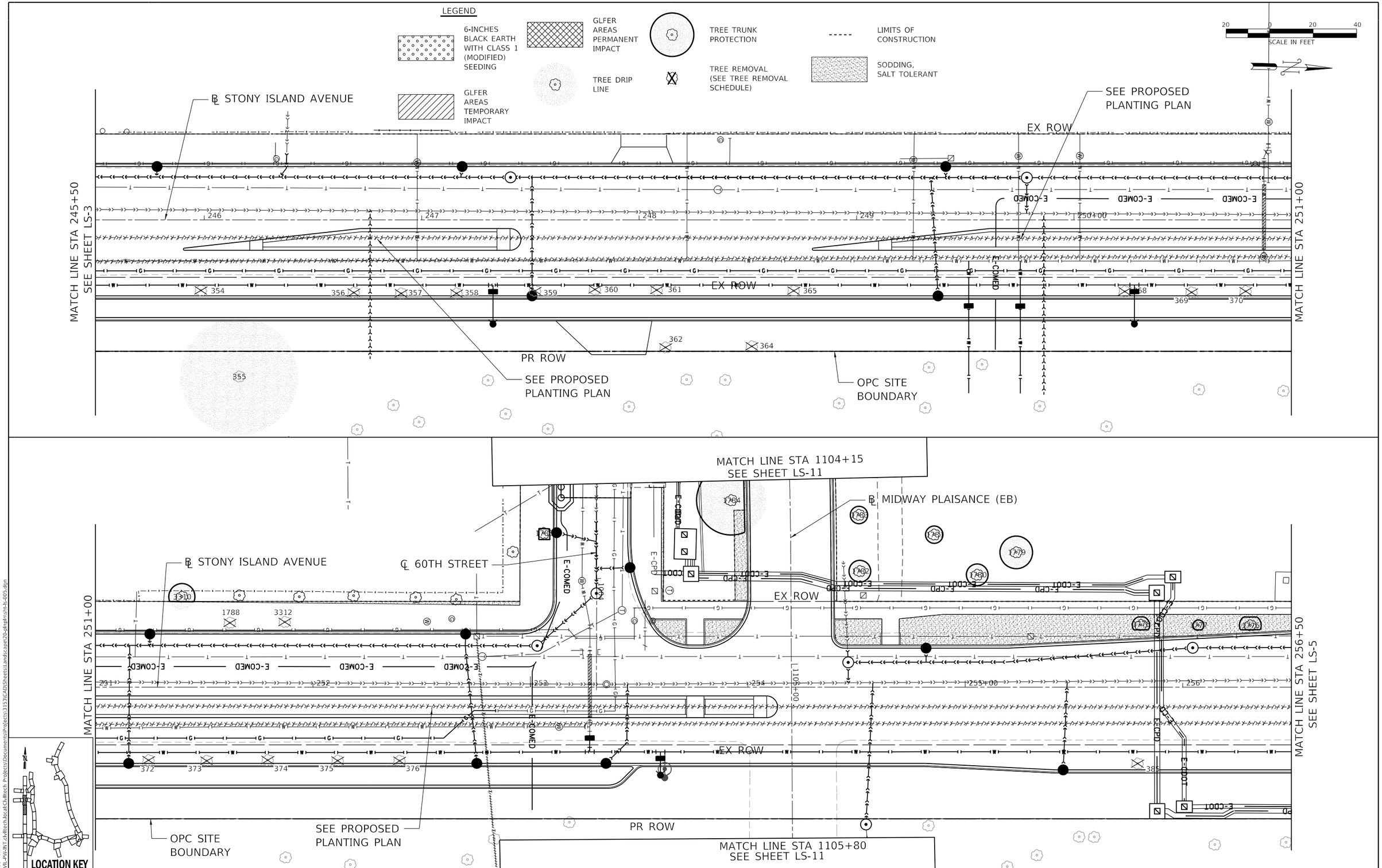


| DESIGN: EML | | | $REV3 | |
|---|---|---|---|---|
| DRAWN: EML | | | $REV2 | |
| CHECKED: TKL | | | $REV1 | |
| APPROVED: | NO. | BY | DATE | DESCRIPTION |
| DATE: 03/29/2021 | REVISIONS | | | |

CDOT CHICAGO DEPARTMENT OF TRANSPORTATION

C*NECT

LANDSCAPING PLAN
TREE REMOVAL AND PROTECTION
S. STONY ISLAND AVE.

JACKSON PARK MOBILITY IMPROVEMENTS

STA. 245+50 TO STA. 256+50

CONTRACT NO. -
PROJECT NO. B-7-203
SCALE: 1"=20'

| TOTAL SHEETS | SHEET NO. |
|---|---|
| 1434 | 607 |

DRAWING NO. LS-4

PLOT DATE: 5/17/2021
PLOT SCALE: 40.0000 ' / in.
FILE NAME: pw:\\CIVIL-PW-INT.civiltech.local:Civiltech Projects\Documents\Projects\3153\CAD\Sheets\Landscape\20-plnplnsht-ls-005.dgn

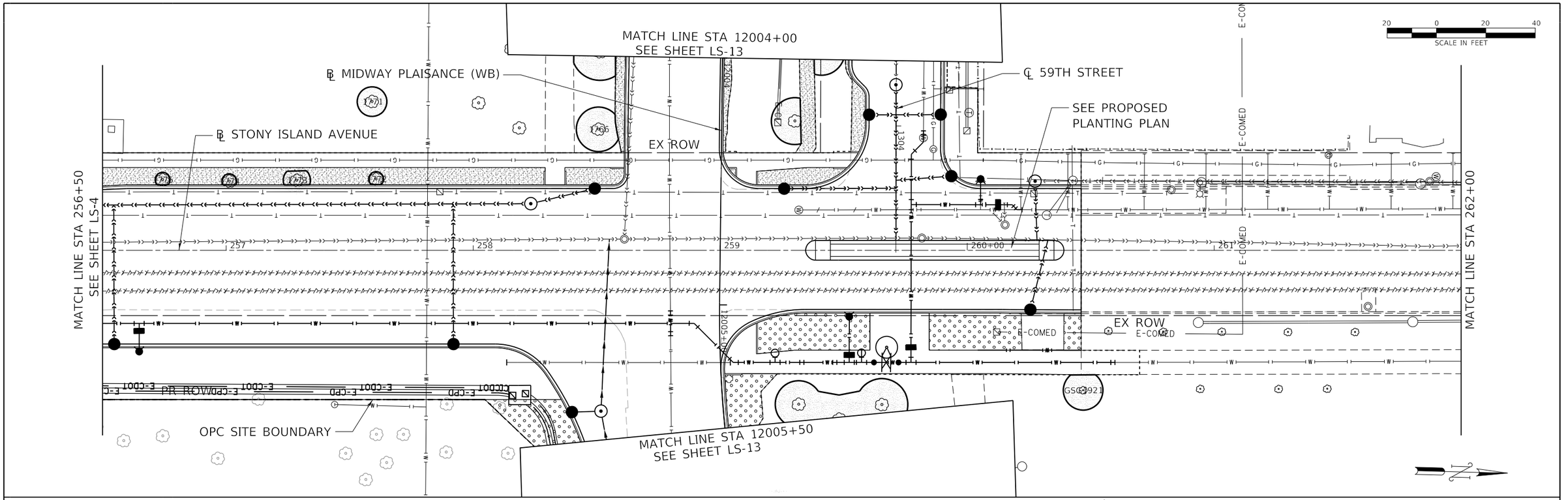


| | | | | |
|---|---|---|---|---|
| DESIGN: EML | | | SREV3 | |
| DRAWN: EML | | | SREV2 | |
| CHECKED: TKL | | | SREV1 | |
| APPROVED: | NO. | BY | DATE | DESCRIPTION |
| DATE: 01/22/2021 | REVISIONS | | | |

CDOT CHICAGO DEPARTMENT OF TRANSPORTATION

C*NECT

LANDSCAPING PLAN
TREE REMOVAL AND PROTECTION
S. STONY ISLAND AVE.

JACKSON PARK MOBILITY IMPROVEMENTS

STA. 256+50 TO STA. 267+50

CONTRACT NO. -
PROJECT NO. B-7-203
SCALE: 1"=20'

| TOTAL SHEETS | SHEET NO. |
|---|---|
| 1434 | 608 |

DRAWING NO. LS-5

PLOT DATE: 5/17/2021
PLOT SCALE: 40.0000 ' / in.
FILE NAME: pw:\\CIVIL-PW-INT.civiltech.local:Civiltech Projects\Documents\Projects\3153\CAD\Sheets\Landscape\20-plnpln\sht-ls-006.dgn

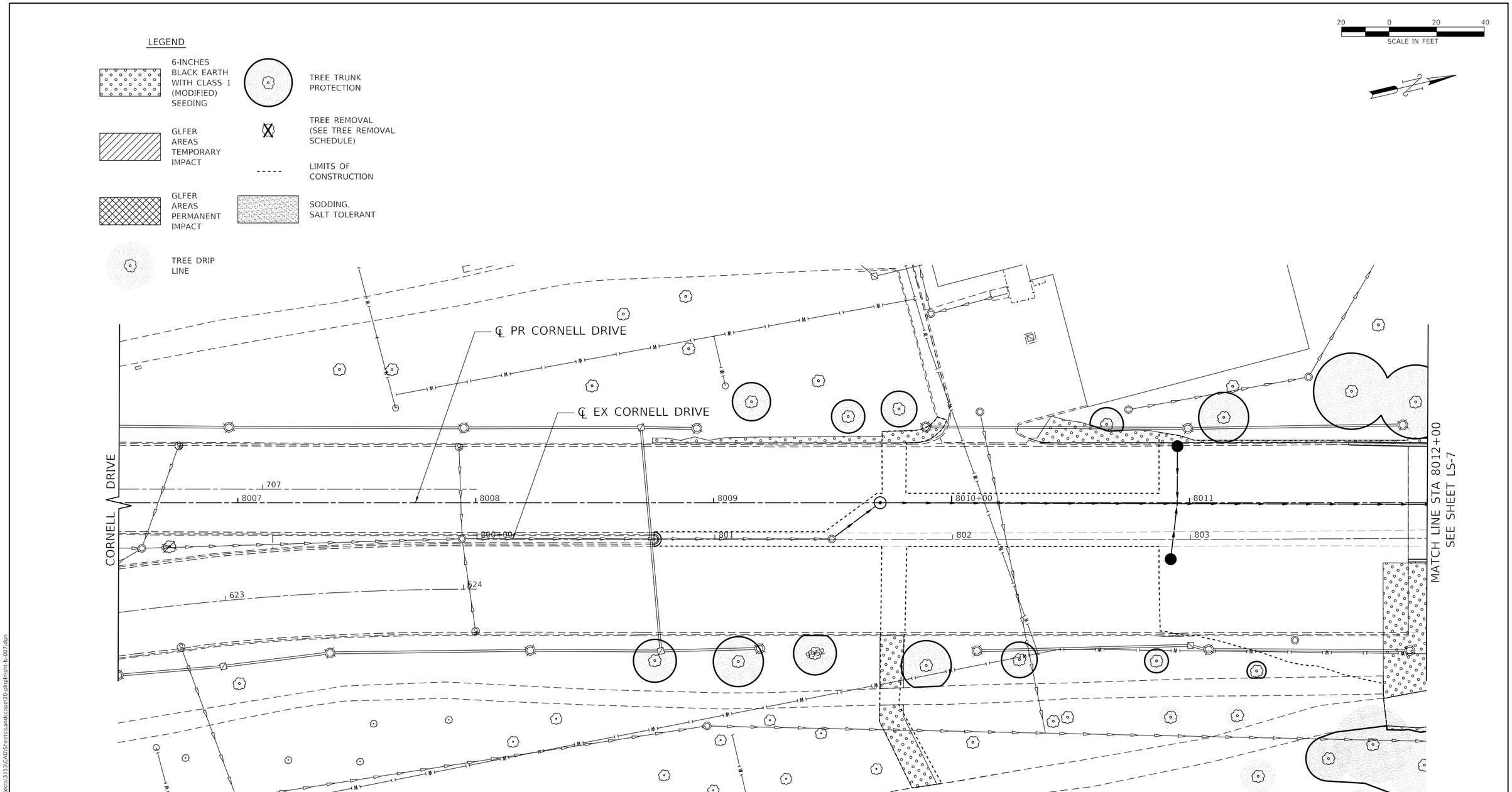


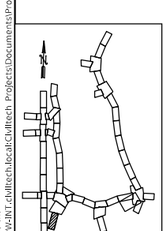


PLOT DATE: 5/17/2021
PLOT SCALE: 40.0000 ' / in.
FILE NAME: pw:\\CIVIL-PW-INT.civiltech.local:Civiltech Projects\Documents\Projects\3153\CAD\Sheets\Landscape\20-plnpln\sht-ls-007.dgn

| | | | | |
|---|---|---|---|---|
| DESIGN: EML | | | | |
| DRAWN: EML | | | | |
| CHECKED: TKL | | | | |
| APPROVED: | NO. | BY | DATE | DESCRIPTION |
| DATE: 01/22/2021 | REVISIONS | | | |

CDOT CHICAGO DEPARTMENT OF TRANSPORTATION

C*NECT

LANDSCAPING PLAN
TREE REMOVAL AND PROTECTION
S. CORNELL DR.

JACKSON PARK MOBILITY IMPROVEMENTS

STA. 8006+50 TO STA. 8012+00

| | | |
|---|---|---|
| CONTRACT NO. - | TOTAL SHEETS 1434 | SHEET NO. 609 |
| PROJECT NO. B-7-203 | DRAWING NO. LS-6 | |
| SCALE: 1"=20' | | |

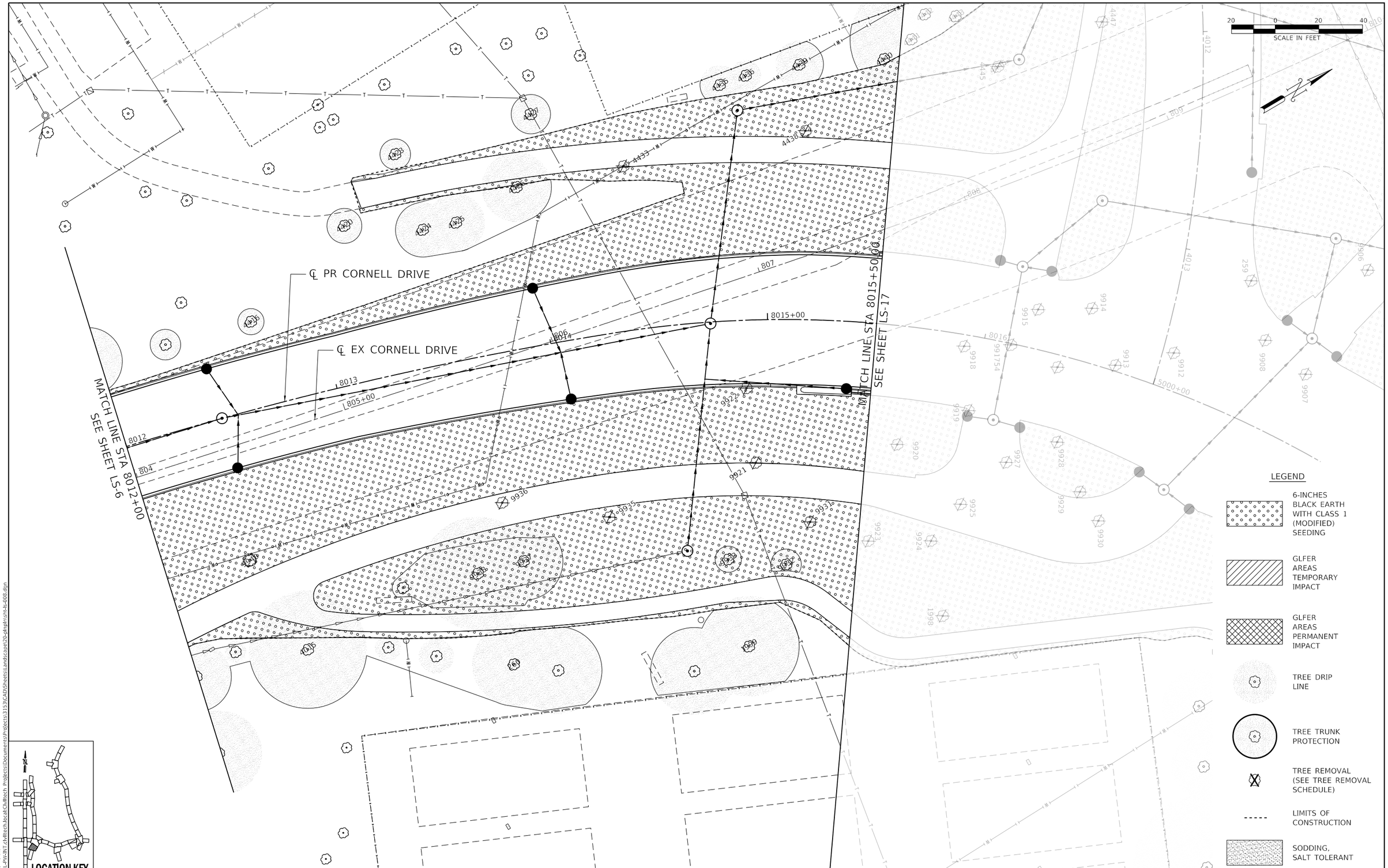


PLOT DATE: 5/17/2021
PLOT SCALE: 40.0000 ' / in.
FILE NAME: pw:\\CIVIL-PW-INT.civiltech.local:Civiltech Projects\Documents\Projects\3153\CAD\Sheets\Landscape\20-plnpln\sht-ls-008.dgn

| | | | | |
|---|---|---|---|---|
| DESIGN: EML | | | | |
| DRAWN: EML | | | | |
| CHECKED: TKL | | | | |
| APPROVED: | NO. | BY | DATE | DESCRIPTION |
| DATE: 01/22/2021 | REVISIONS | | | |

CDOT CHICAGO DEPARTMENT OF TRANSPORTATION

C*NECT

LANDSCAPING PLAN
TREE REMOVAL AND PROTECTION
S. CORNELL DR.

JACKSON PARK MOBILITY IMPROVEMENTS

STA. 8012+00 TO STA. 8015+50

| | | |
|---|---|---|
| CONTRACT NO. - | TOTAL SHEETS 1434 | SHEET NO. 610 |
| PROJECT NO. B-7-203 | DRAWING NO. LS-7 | |
| SCALE: 1"=20' | | |

LEGEND

- 6-INCHES BLACK EARTH WITH CLASS 1 (MODIFIED) SEEDING
- GLFER AREAS TEMPORARY IMPACT
- GLFER AREAS PERMANENT IMPACT
- TREE DRIP LINE
- TREE TRUNK PROTECTION
- TREE REMOVAL (SEE TREE REMOVAL SCHEDULE)
- LIMITS OF CONSTRUCTION
- SODDING, SALT TOLERANT

20 0 20 40
SCALE IN FEET

℄ EX CORNELL DRIVE

MATCH LINE STA 810+70
SEE SHEET LS-17

MATCH LINE STA 814+00

809 810+00 811 812 813

℄ EX CORNELL DRIVE

OPC SITE BOUNDARY

MATCH LINE STA 814+00

814 815+00 816 817 818

MATCH LINE STA 819+00
SEE SHEET LS-9

LOCATION KEY

| | | | | | |
|---|---|---|---|---|---|
| DESIGN: EML | | | $REV3 | | |
| DRAWN: EML | | | $REV2 | | |
| CHECKED: TKL | | | $REV1 | | |
| APPROVED: | NO. | BY | DATE | DESCRIPTION | |
| DATE: 01/22/2021 | REVISIONS | | | | |

CDOT CHICAGO DEPARTMENT OF TRANSPORTATION

C*NECT

LANDSCAPING PLAN
TREE REMOVAL AND PROTECTION
S. CORNELL DR.

JACKSON PARK MOBILITY IMPROVEMENTS

STA. 810+70 TO STA. 819+00

| | | | |
|---|---|---|---|
| CONTRACT NO. - | | TOTAL SHEETS 1434 | SHEET NO. 611 |
| PROJECT NO. B-7-203 | | DRAWING NO. LS-8 | |
| SCALE: 1"=20' | | | |

PLOT DATE: 1/17/2021
PLOT SCALE: 40.0000 ' / in.
FILE NAME: pw:\\CDOT-PW-INT.cdot.tech.local\CdotTech Projects\Documents\Projects\3133\CADD\Sheets\Landscape%20-%20Plan%20-%20Ls-009.dgn

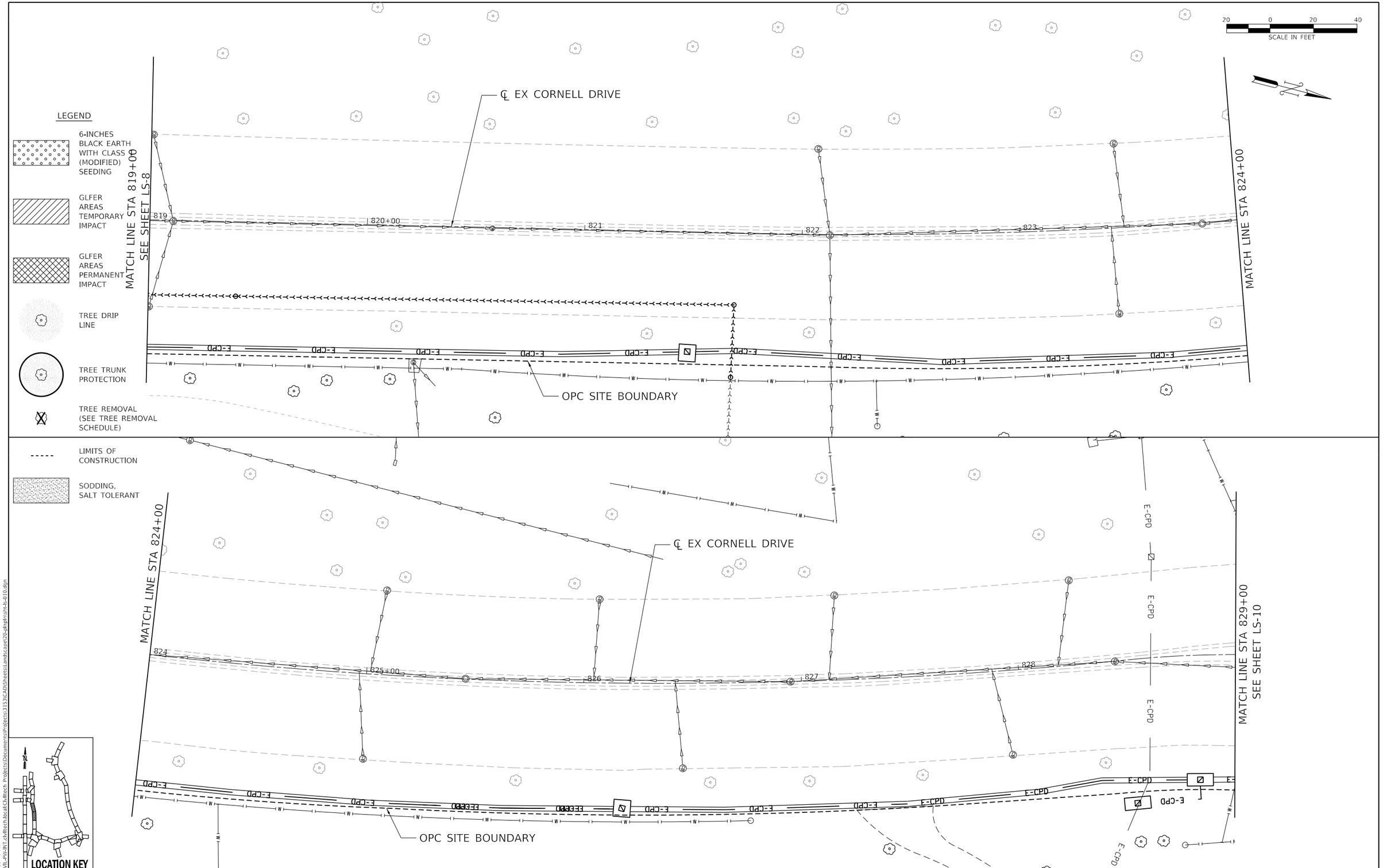


| | | | | |
|---|---|---|---|---|
| DESIGN: EML | | | $REV3 | |
| DRAWN: EML | | | $REV2 | |
| CHECKED: TKL | | | $REV1 | |
| APPROVED: | NO. | BY | DATE | DESCRIPTION |
| DATE: 01/22/2021 | REVISIONS | | | |

CDOT CHICAGO DEPARTMENT OF TRANSPORTATION

C*NECT

LANDSCAPING PLAN
TREE REMOVAL AND PROTECTION
S. CORNELL DR.

JACKSON PARK MOBILITY IMPROVEMENTS

STA. 819+00 TO STA. 829+00

CONTRACT NO. -
PROJECT NO. B-7-203
SCALE: 1"=20'

| TOTAL SHEETS | SHEET NO. |
|---|---|
| 1434 | 612 |

DRAWING NO. LS-9

PLOT DATE: 5/17/2021
PLOT SCALE: 40.0000 ' / in.
FILE NAME: pw:\\CIVIL-PW-INT.civiltech.local:Civiltech Projects\Documents\Projects\3153\CAD\Sheets\Landscape\20-plnpln\sht-ls-010.dgn

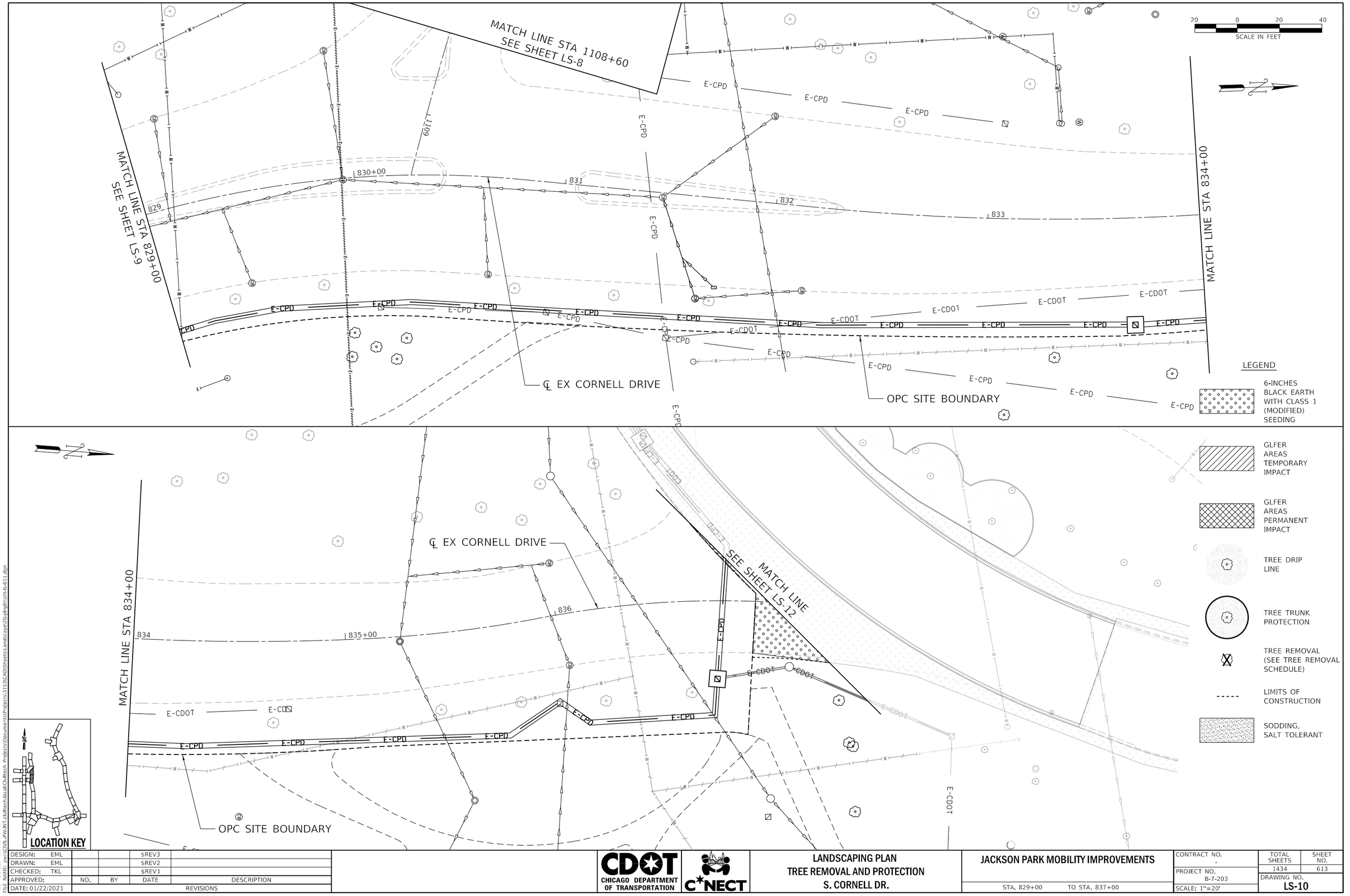


| | | | | |
|---|---|---|---|---|
| DESIGN: EML | | | SREV3 | |
| DRAWN: EML | | | SREV2 | |
| CHECKED: TKL | | | SREV1 | |
| APPROVED: | NO. | BY | DATE | DESCRIPTION |
| DATE: 01/22/2021 | REVISIONS | | | |

CDOT CHICAGO DEPARTMENT OF TRANSPORTATION

C*NECT

**LANDSCAPING PLAN**
**TREE REMOVAL AND PROTECTION**
**S. CORNELL DR.**

**JACKSON PARK MOBILITY IMPROVEMENTS**

STA. 829+00 TO STA. 837+00

| | |
|---|---|
| CONTRACT NO. - | TOTAL SHEETS 1434 |
| PROJECT NO. B-7-203 | SHEET NO. 613 |
| SCALE: 1"=20' | DRAWING NO. LS-10 |

PLOT DATE: 5/17/2021
PLOT SCALE: 40.0000 ' / in.
FILE NAME: pw:\\CTVL-PW-INT.cdot.tech.local\CivilTech Projects\Documents\Projects\3133\CADDSheets\Landscape\26-plnpln-sht-ls-011.dgn

LEGEND

- 6-INCHES BLACK EARTH WITH CLASS 1 (MODIFIED) SEEDING
- GLFER AREAS TEMPORARY IMPACT
- GLFER AREAS PERMANENT IMPACT
- TREE DRIP LINE
- TREE TRUNK PROTECTION
- TREE REMOVAL (SEE TREE REMOVAL SCHEDULE)
- LIMITS OF CONSTRUCTION
- SODDING, SALT TOLERANT

20 0 20 40
SCALE IN FEET

℄ MIDWAY PLAISANCE (EB)

1100+00 1101 1102

MATCH LINE STA 1102+50

EX ROW

E-COMED

1000+00 1001

℄ 60TH STREET

MATCH LINE STA 1102+50

℄ MIDWAY PLAISANCE (EB)

1103 1104

MATCH LINE STA 1104+15

SEE SHEET LS-4

GS-1886 GS-1887

E-CPD EX ROW

1002 1003

℄ 60TH STREET

EX ROW

MATCH LINE STA 1105+80

SEE SHEET LS-4

1106

MATCH LINE STA 1106+50

SEE SHEET LS-12

OPC SITE BOUNDARY

LOCATION KEY

| | | | | | |
|---|---|---|---|---|---|
| DESIGN: EML | | | $REV3 | | |
| DRAWN: EML | | | $REV2 | | |
| CHECKED: TKL | | | $REV1 | | |
| APPROVED: | NO. | BY | DATE | DESCRIPTION | |
| DATE: 01/22/2021 | REVISIONS | | | | |

CDOT CHICAGO DEPARTMENT OF TRANSPORTATION

C*NECT

LANDSCAPING PLAN
TREE REMOVAL AND PROTECTION
E. MIDWAY PLAISANCE (S)

JACKSON PARK MOBILITY IMPROVEMENTS

STA. 1100+00 TO STA. 1106+50

| | |
|---|---|
| CONTRACT NO. | - |
| PROJECT NO. | B-7-203 |
| SCALE: 1"=20' | |

| TOTAL SHEETS | SHEET NO. |
|---|---|
| 1434 | 614 |

DRAWING NO. LS-11

PLOT DATE: 5/17/2021
PLOT SCALE: 40.0000 ' / in.
FILE NAME: pw:\\CVL-PW-INT.cdot.tech.local:CivilTech Projects\Documents\Projects\3133\CADSheets\Landscape\26-plnplnsht-ls-012.dgn

LEGEND

- 6-INCHES BLACK EARTH WITH CLASS 1 (MODIFIED) SEEDING
- GLFER AREAS TEMPORARY IMPACT
- GLFER AREAS PERMANENT IMPACT
- TREE DRIP LINE
- TREE TRUNK PROTECTION
- TREE REMOVAL (SEE TREE REMOVAL SCHEDULE)
- LIMITS OF CONSTRUCTION
- SODDING, SALT TOLERANT




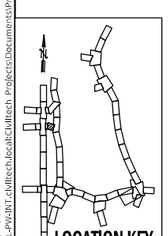


LOCATION KEY

PLOT DATE: 5/17/2021
PLOT SCALE: 40.0000 ' / in.
FILE NAME: pw:\\CIVIL-PW-INT.civiltech.local:Civiltech Projects\Documents\Projects\3153\CAD\Sheets\Landscape\20-plnpln\sht-ls-013.dgn

| | | | | |
|---|---|---|---|---|
| DESIGN: EML | | | | |
| DRAWN: EML | | | | |
| CHECKED: TKL | | | | |
| APPROVED: | NO. | BY | DATE | DESCRIPTION |
| DATE: 01/22/2021 | REVISIONS | | | |

CDOT CHICAGO DEPARTMENT OF TRANSPORTATION

C*NECT

LANDSCAPING PLAN
TREE REMOVAL AND PROTECTION
E. MIDWAY PLAISANCE (S)

JACKSON PARK MOBILITY IMPROVEMENTS

STA. 1106+50 TO STA. 1108+60

| | | |
|---|---|---|
| CONTRACT NO. - | TOTAL SHEETS 1434 | SHEET NO. 615 |
| PROJECT NO. B-7-203 | DRAWING NO. LS-12 | |
| SCALE: 1"=20' | | |

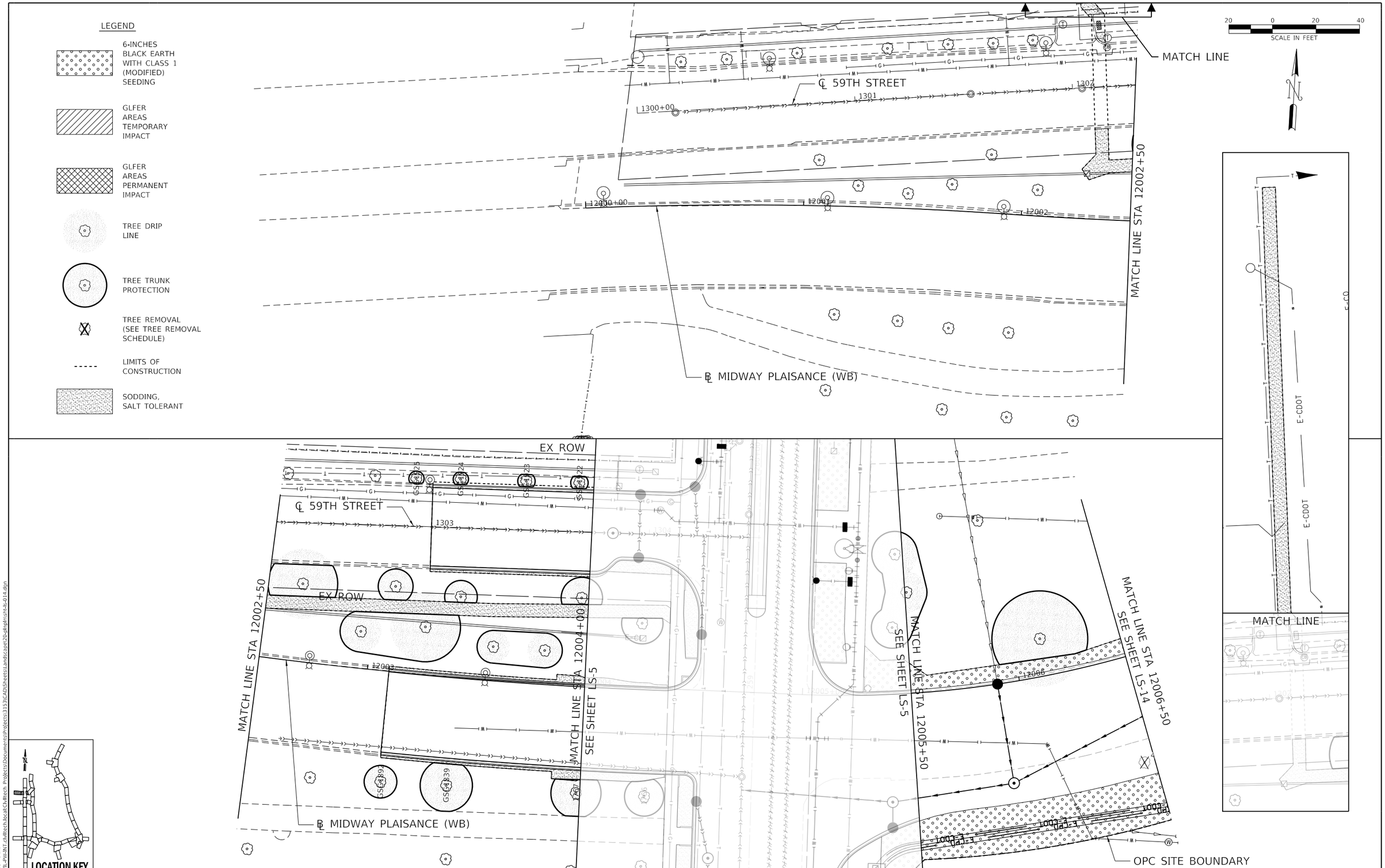


| | | | | | |
|---|---|---|---|---|---|
| DESIGN: | EML | | | SREV3 | |
| DRAWN: | EML | | | SREV2 | |
| CHECKED: | TKL | | | SREV1 | |
| APPROVED: | | NO. | BY | DATE | DESCRIPTION |
| DATE: 01/22/2021 | | REVISIONS | | | |

CDOT CHICAGO DEPARTMENT OF TRANSPORTATION

C*NECT

LANDSCAPING PLAN
TREE REMOVAL AND PROTECTION
E. MIDWAY PLAISANCE (N)

JACKSON PARK MOBILITY IMPROVEMENTS

STA. 12000+00 TO STA. 12006+50

CONTRACT NO. -
PROJECT NO. B-7-203
SCALE: 1"=20'

| TOTAL SHEETS | SHEET NO. |
|---|---|
| 1434 | 616 |

DRAWING NO. LS-13

PLOT DATE: 5/17/2021
PLOT SCALE: 40.0000 ' / in.
FILE NAME: pw:\\CIVIL-PW-INT.civiltech.local:Civiltech Projects\Documents\Projects\3153\CAD\Sheets\Landscape\20-plnpln\sht-ls-014.dgn

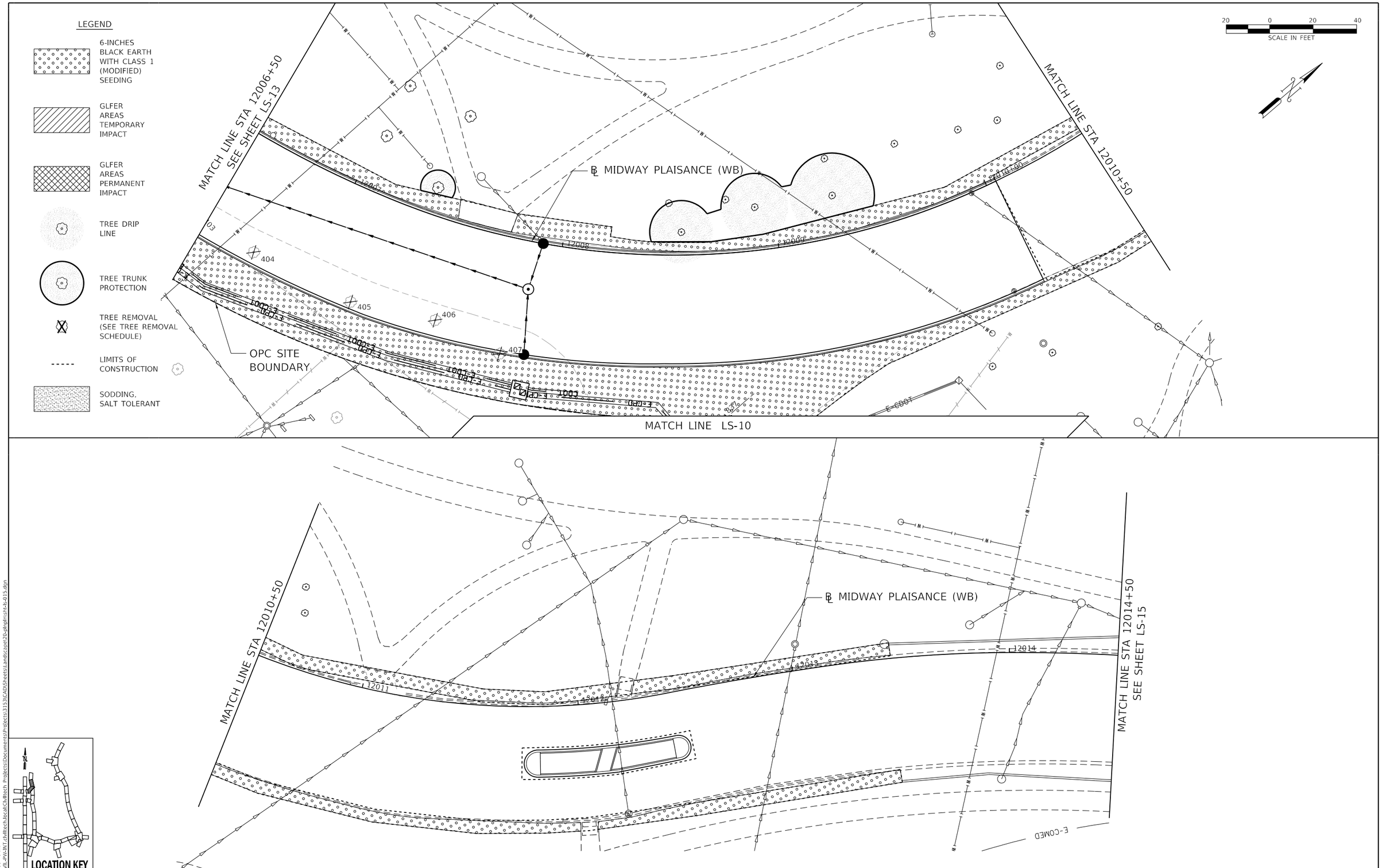


| | | | | |
|---|---|---|---|---|
| DESIGN: EML | | | $REV3 | |
| DRAWN: EML | | | $REV2 | |
| CHECKED: TKL | | | $REV1 | |
| APPROVED: | NO. | BY | DATE | DESCRIPTION |
| DATE: 01/22/2021 | REVISIONS | | | |

CDOT CHICAGO DEPARTMENT OF TRANSPORTATION

C*NECT

LANDSCAPING PLAN
TREE REMOVAL AND PROTECTION
E. MIDWAY PLAISANCE (N)

JACKSON PARK MOBILITY IMPROVEMENTS

STA. 12006+50 TO STA. 12014+50

| | | |
|---|---|---|
| CONTRACT NO. - | TOTAL SHEETS 1434 | SHEET NO. 617 |
| PROJECT NO. B-7-203 | DRAWING NO. LS-14 | |
| SCALE: 1"=20' | | |

PLOT DATE: 5/17/2021
PLOT SCALE: 40.0000 ' / in.
FILE NAME: pw:\\CIVIL-PW-INT.civiltech.local:Civiltech Projects\Documents\Projects\3153\CAD\Sheets\Landscape\20-plnpln\sht-ls-015.dgn

LEGEND

- 6-INCHES BLACK EARTH WITH CLASS 1 (MODIFIED) SEEDING
- GLFER AREAS TEMPORARY IMPACT
- GLFER AREAS PERMANENT IMPACT
- TREE DRIP LINE
- TREE TRUNK PROTECTION
- TREE REMOVAL (SEE TREE REMOVAL SCHEDULE)
- LIMITS OF CONSTRUCTION
- SODDING, SALT TOLERANT

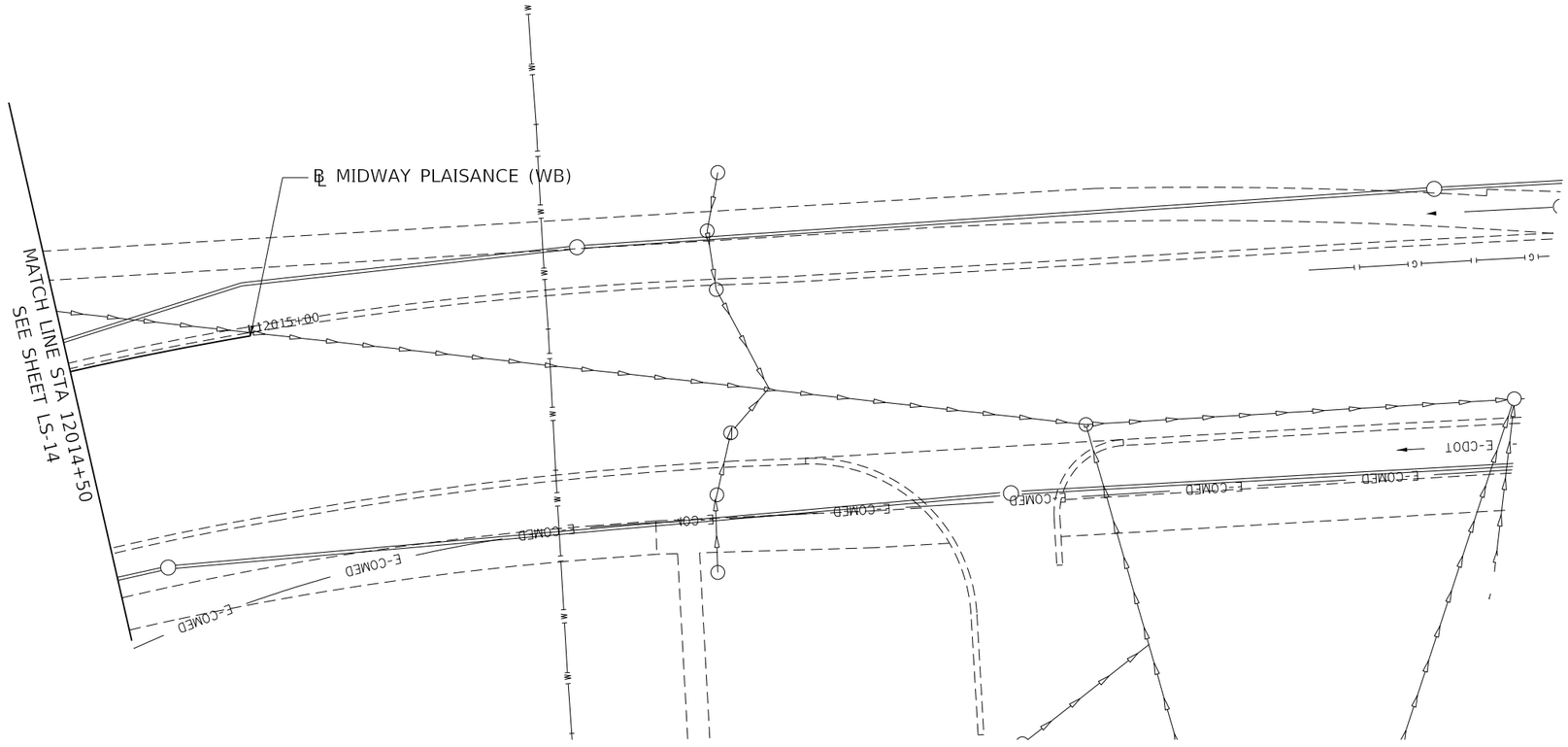


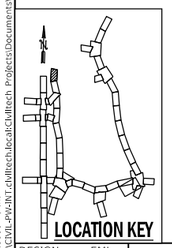
LOCATION KEY

20 0 20 40
SCALE IN FEET

| | | | | |
|---|---|---|---|---|
| DESIGN: EML | | | | |
| DRAWN: EML | | | | |
| CHECKED: TKL | | | | |
| APPROVED: | NO. | BY | DATE | DESCRIPTION |
| DATE: 01/22/2021 | REVISIONS | | | |

CDOT CHICAGO DEPARTMENT OF TRANSPORTATION

C*NECT

LANDSCAPING PLAN
TREE REMOVAL AND PROTECTION
E. MIDWAY PLAISANCE (N)

JACKSON PARK MOBILITY IMPROVEMENTS

STA. 12014+50 TO STA. 12015+00

| | | |
|---|---|---|
| CONTRACT NO. - | TOTAL SHEETS 1434 | SHEET NO. 618 |
| PROJECT NO. B-7-203 | DRAWING NO. LS-15 | |
| SCALE: 1"=20' | | |

PLOT DATE: 5/17/2021
PLOT SCALE: 40.0000 ' / in.
FILE NAME: pw:\\CIVIL-PW-INT.civiltech.local:Civiltech Projects\Documents\Projects\3153\CAD\Sheets\Landscape\20-plnpln\sht-ls-016.dgn

LEGEND

- 6-INCHES BLACK EARTH WITH CLASS 1 (MODIFIED) SEEDING
- GLFER AREAS TEMPORARY IMPACT
- GLFER AREAS PERMANENT IMPACT
- TREE DRIP LINE
- TREE TRUNK PROTECTION
- TREE REMOVAL (SEE TREE REMOVAL SCHEDULE)
- LIMITS OF CONSTRUCTION
- SODDING, SALT TOLERANT

SCALE IN FEET: 20 0 20 40

63RD STREET
℄ 63RD STREET
EX ROW
E-COMED
4000+00
4001
4002
4003
4004
MATCH LINE STA 4005+00
4005+00
4006
MATCH LINE STA 4006+25
SEE SHEET LS-2
MATCH LINE STA 4008+00
4008
4009
4010+00
MATCH LINE STA 4010+50
SEE SHEET LS-17
E-CPD
258
CDOT
LOCATION KEY

PLOT DATE: 5/17/2021
PLOT SCALE: 40.0000 ' / in.
FILE NAME: pw:\\CVIL-PW-NT.cdot.tech.local:CivilTech Projects:Documents\Projects\3153\CADD\Sheets\Landscape\20-plan\sht-ls-017.dgn

| | | | | |
|---|---|---|---|---|
| DESIGN: EML | | | SREV3 | |
| DRAWN: EML | | | SREV2 | |
| CHECKED: TKL | | | SREV1 | |
| APPROVED: | NO. | BY | DATE | DESCRIPTION |
| DATE: 01/22/2021 | REVISIONS | | | |

CDOT CHICAGO DEPARTMENT OF TRANSPORTATION

C*NECT

LANDSCAPING PLAN
TREE REMOVAL AND PROTECTION
E. 63RD ST.

JACKSON PARK MOBILITY IMPROVEMENTS

STA. 4000+00 TO STA. 4010+50

| | |
|---|---|
| CONTRACT NO. - | TOTAL SHEETS 1434 |
| PROJECT NO. B-7-203 | SHEET NO. 619 |
| SCALE: 1"=20' | DRAWING NO. LS-16 |

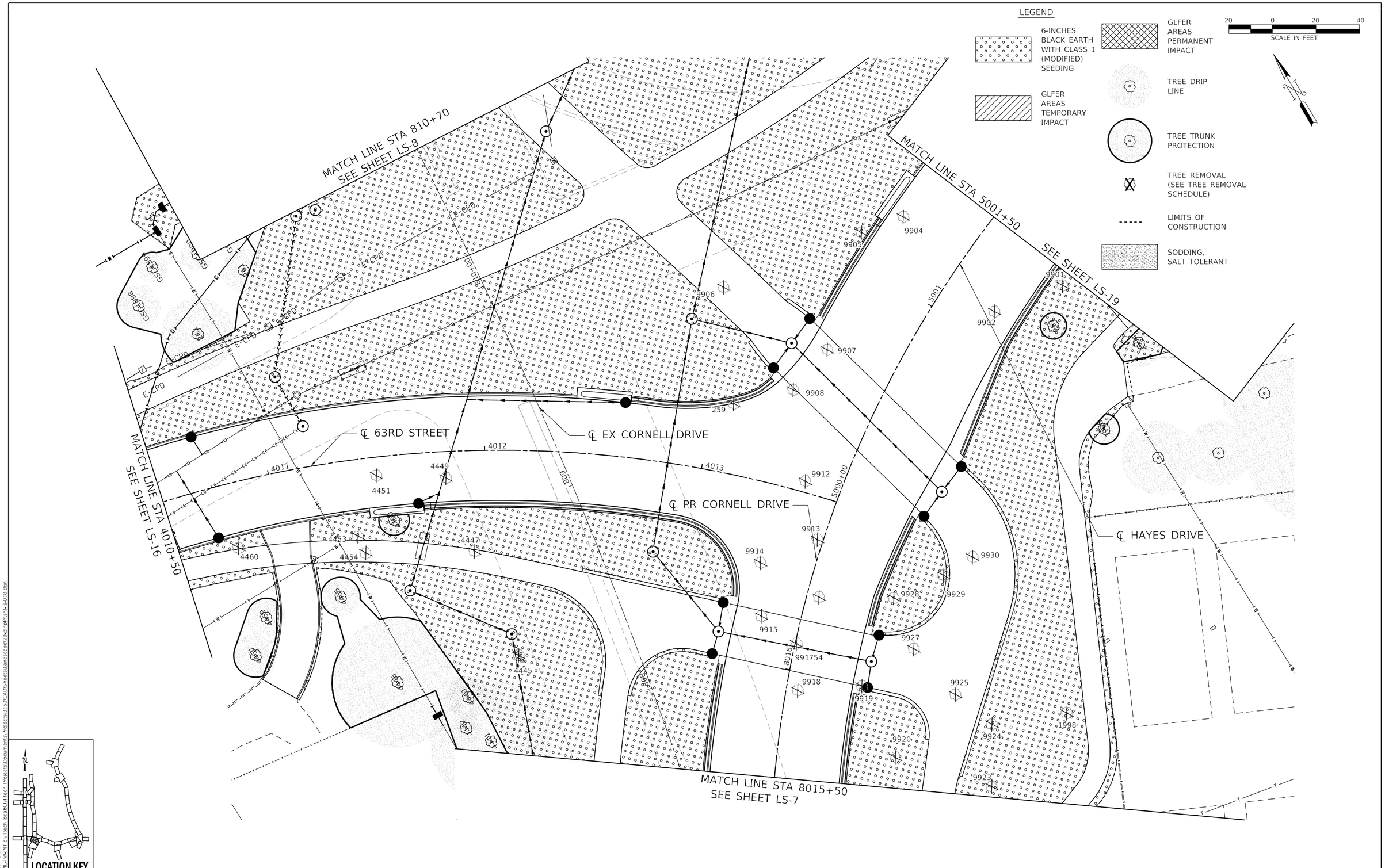


| | | | | |
|---|---|---|---|---|
| DESIGN: EML | | | | |
| DRAWN: EML | | | | |
| CHECKED: TKL | | | | |
| APPROVED: | NO. | BY | DATE | DESCRIPTION |
| DATE: 01/22/2021 | REVISIONS | | | |

CDOT CHICAGO DEPARTMENT OF TRANSPORTATION

C*NECT

LANDSCAPING PLAN
TREE REMOVAL AND PROTECTION
E. 63RD ST./E. HAYES DR./S. CORNELL DR.

JACKSON PARK MOBILITY IMPROVEMENTS

STA. 4010+50 TO STA. 5001+50

| | | |
|---|---|---|
| CONTRACT NO. - | TOTAL SHEETS 1434 | SHEET NO. 620 |
| PROJECT NO. B-7-203 | DRAWING NO. LS-17 | |
| SCALE: 1"=20' | | |

PLOT DATE: 5/17/2021
PLOT SCALE: 40.0000 ' / in.
FILE NAME: pw:\\CIVIL-PW-INT.civiltech.local:Civiltech Projects\Documents\Projects\3153\CAD\Sheets\Landscape\20-plnplnsht-ls-018.dgn

LEGEND

- 6-INCHES BLACK EARTH WITH CLASS 1 (MODIFIED) SEEDING
- GLFER AREAS TEMPORARY IMPACT
- GLFER AREAS PERMANENT IMPACT
- TREE DRIP LINE
- TREE TRUNK PROTECTION
- TREE REMOVAL (SEE TREE REMOVAL SCHEDULE)
- LIMITS OF CONSTRUCTION
- SODDING, SALT TOLERANT

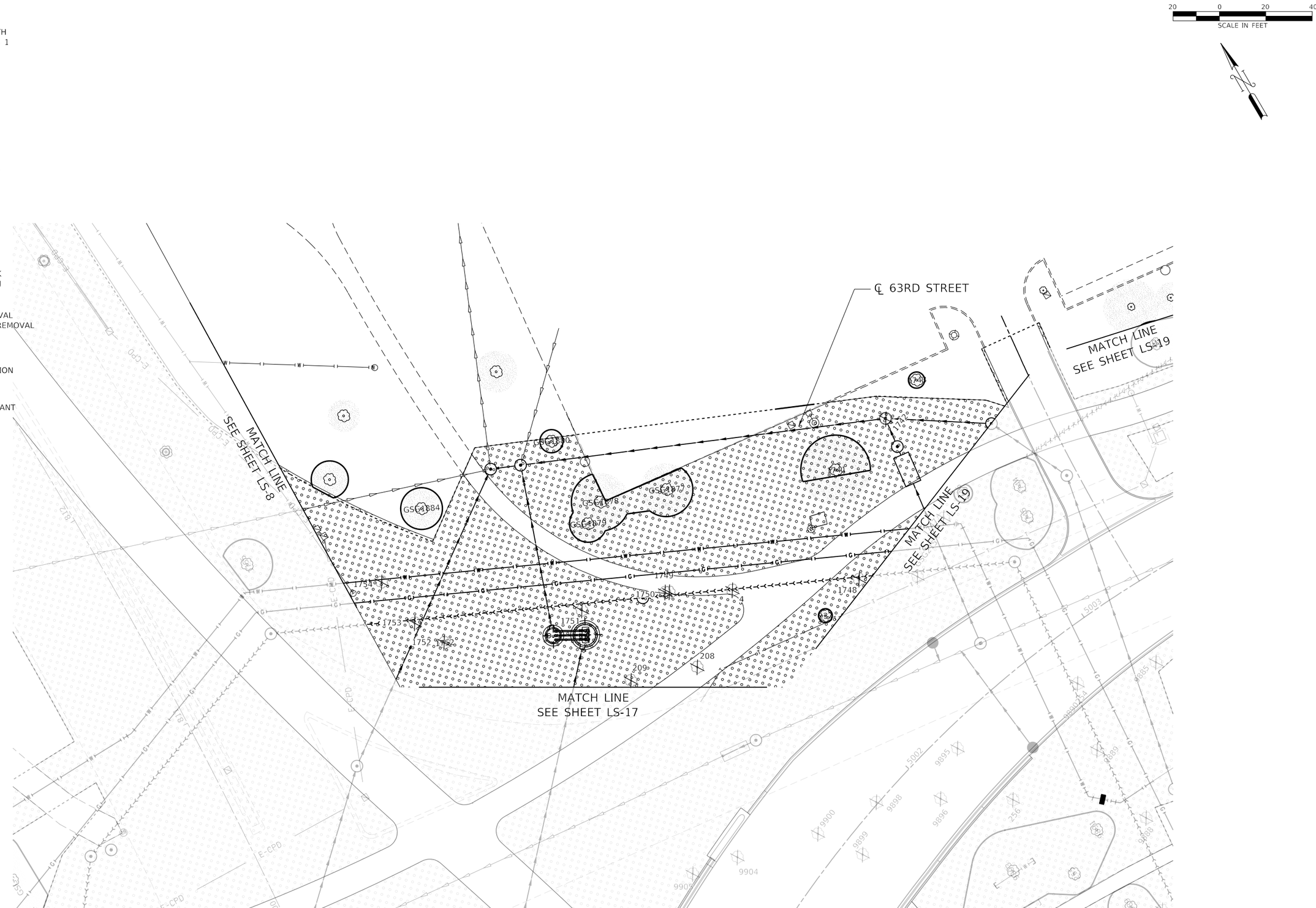


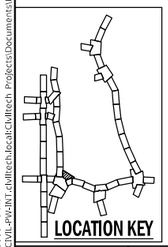


PLOT DATE: 5/17/2021
PLOT SCALE: 40.0000 ' / in.
FILE NAME: pw:\\CIVIL-PW-INT.civiltech.local:Civiltech Projects\Documents\Projects\3153\CAD\Sheets\Landscape\20-plnpln\sht-ls-036.dgn

| | | | | |
|---|---|---|---|---|
| DESIGN: EML | | | | |
| DRAWN: EML | | | | |
| CHECKED: TKL | | | | |
| APPROVED: | NO. | BY | DATE | DESCRIPTION |
| DATE: 01/22/2021 | REVISIONS | | | |

CDOT CHICAGO DEPARTMENT OF TRANSPORTATION

C*NECT

LANDSCAPING PLAN
TREE REMOVAL AND PROTECTION
E. 63RD ST./E. HAYES DR./S. CORNELL DR.

JACKSON PARK MOBILITY IMPROVEMENTS

STA. 5001+50 TO STA. 5003+50

| | | |
|---|---|---|
| CONTRACT NO. - | TOTAL SHEETS 1434 | SHEET NO. 621 |
| PROJECT NO. B-7-203 | DRAWING NO. LS-18 | |
| SCALE: 1"=20' | | |

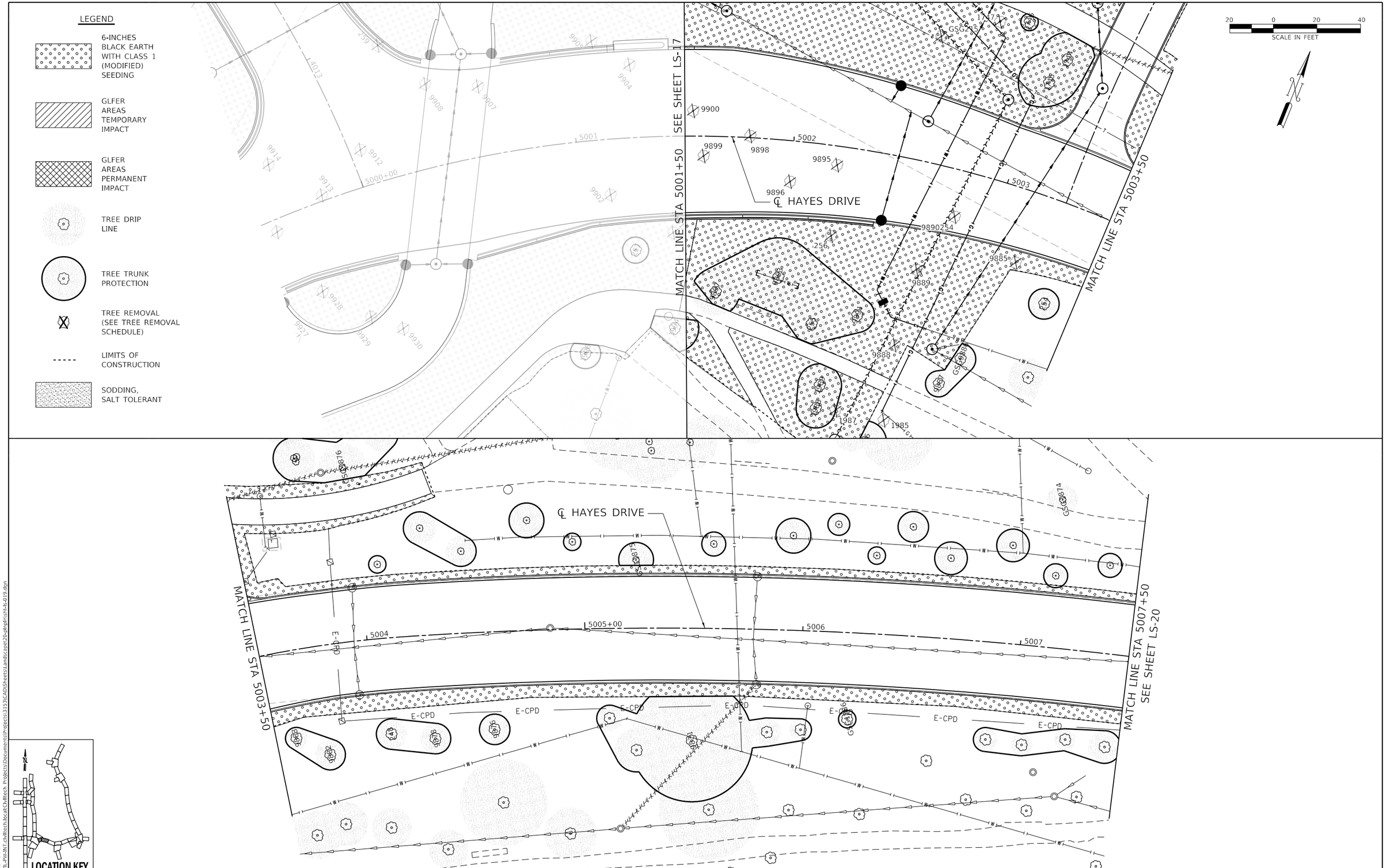


| DESIGN: EML | | | SREV3 | |
|---|---|---|---|---|
| DRAWN: EML | | | SREV2 | |
| CHECKED: TKL | | | SREV1 | |
| APPROVED: | NO. | BY | DATE | DESCRIPTION |
| DATE: 01/22/2021 | REVISIONS | | | |

CDOT CHICAGO DEPARTMENT OF TRANSPORTATION

C*NECT

LANDSCAPING PLAN
TREE REMOVAL AND PROTECTION
E. HAYES DR.

JACKSON PARK MOBILITY IMPROVEMENTS

STA. 5001+50 TO STA. 5007+50

| CONTRACT NO. | TOTAL SHEETS | SHEET NO. |
|---|---|---|
| - | 1434 | 622 |
| PROJECT NO. B-7-203 | DRAWING NO. LS-19 | |
| SCALE: 1"=20' | | |

PLOT DATE: 5/17/2021
PLOT SCALE: 40.0000 ' / in.
FILE NAME: pw:\\CIVIL-PW-INT.civiltech.local:Civiltech Projects\Documents\Projects\3153\CAD\Sheets\Landscape\20-plnpln\sht-ls-019.dgn

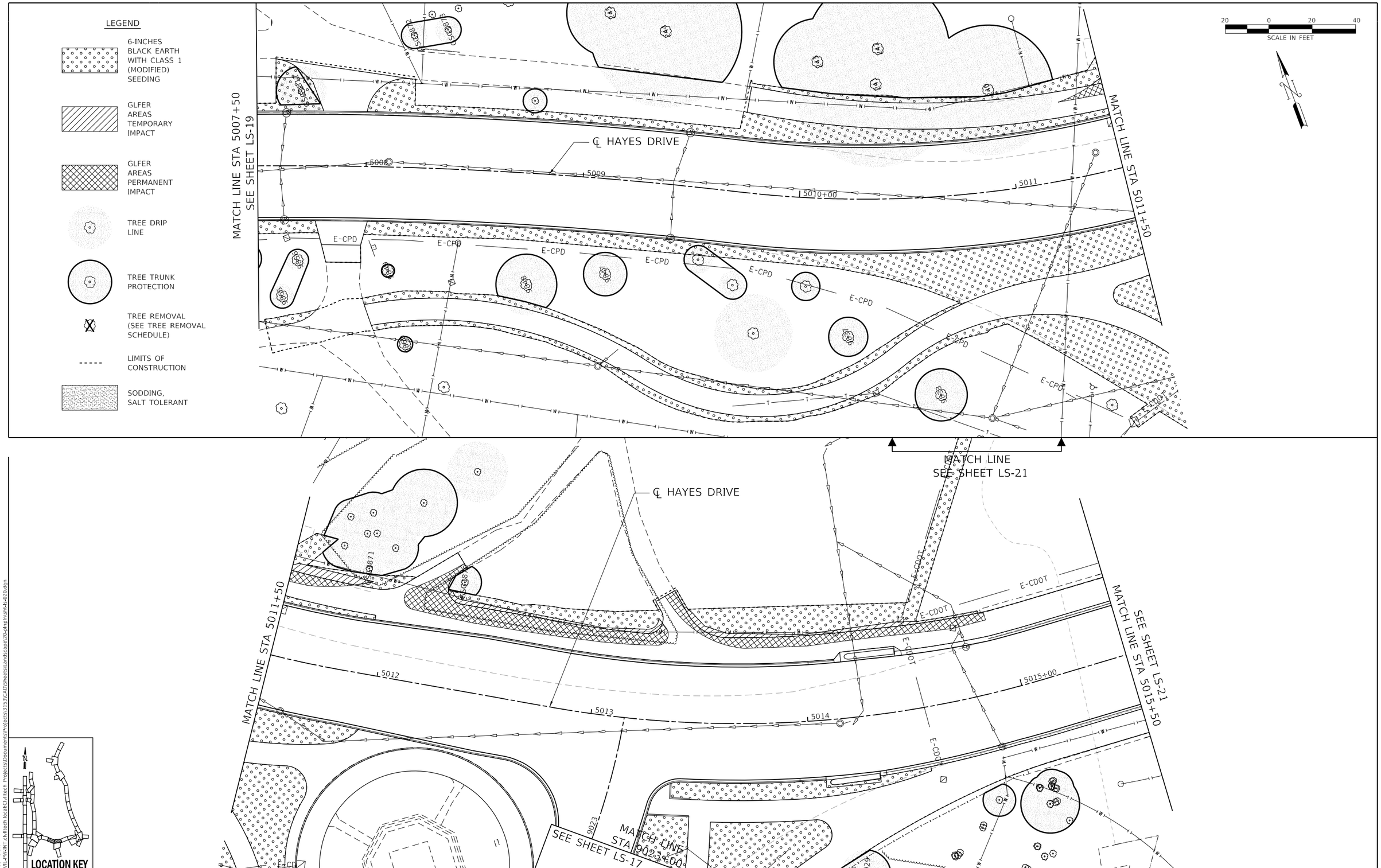


| | | | | |
|---|---|---|---|---|
| DESIGN: EML | | | $REV3 | |
| DRAWN: EML | | | $REV2 | |
| CHECKED: TKL | | | $REV1 | |
| APPROVED: | NO. | BY | DATE | DESCRIPTION |
| DATE: 01/22/2021 | REVISIONS | | | |

CDOT CHICAGO DEPARTMENT OF TRANSPORTATION

C*NECT

LANDSCAPING PLAN
TREE REMOVAL AND PROTECTION
E. HAYES DR.

JACKSON PARK MOBILITY IMPROVEMENTS

STA. 5007+50 TO STA. 5015+50

| | | |
|---|---|---|
| CONTRACT NO. - | TOTAL SHEETS 1434 | SHEET NO. 623 |
| PROJECT NO. B-7-203 | DRAWING NO. LS-20 | |
| SCALE: 1"=20' | | |

PLOT DATE: 5/17/2021
PLOT SCALE: 40.0000 ' / in.
FILE NAME: pw:\\CIVIL-PW-INT.civiltech.local:Civiltech Projects\Documents\Projects\3153\CAD\Sheets\Landscape\20-plnpln\sht-ls-020.dgn

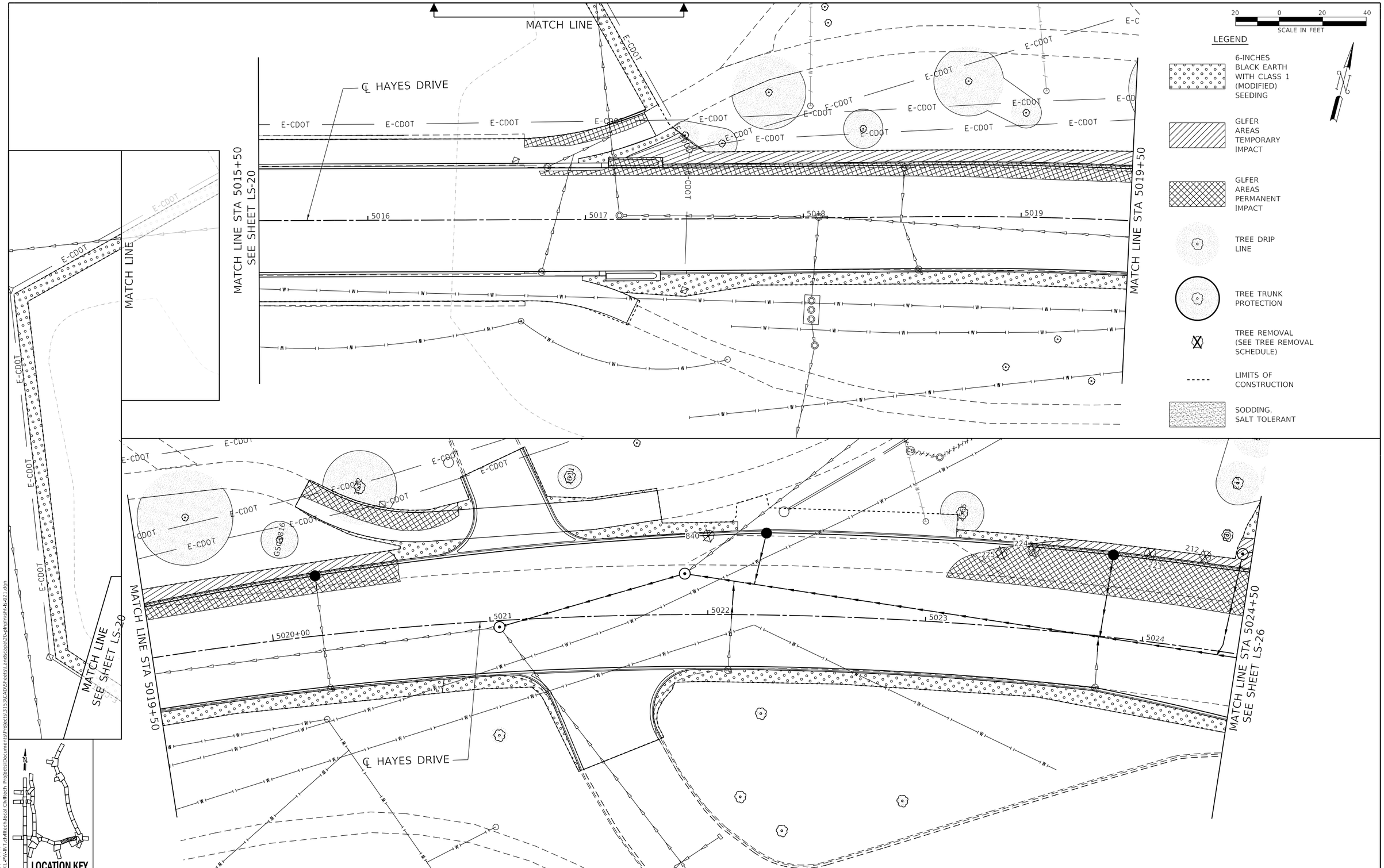


| | | | | |
|---|---|---|---|---|
| DESIGN: EML | | | $REV3 | |
| DRAWN: EML | | | $REV2 | |
| CHECKED: TKL | | | $REV1 | |
| APPROVED: | NO. | BY | DATE | DESCRIPTION |
| DATE: 01/22/2021 | REVISIONS | | | |

CDOT CHICAGO DEPARTMENT OF TRANSPORTATION

C*NECT

LANDSCAPING PLAN
TREE REMOVAL AND PROTECTION
E. HAYES DR.

JACKSON PARK MOBILITY IMPROVEMENTS

STA. 5015+50 TO STA. 5024+50

| | | |
|---|---|---|
| CONTRACT NO. - | TOTAL SHEETS 1434 | SHEET NO. 624 |
| PROJECT NO. B-7-203 | DRAWING NO. LS-21 | |
| SCALE: 1"=20' | | |

PLOT DATE: 5/17/2021
PLOT SCALE: 40.0000 ' / in.
FILE NAME: pw:\\CIVIL-PW-INT.civiltech.local:Civiltech Projects\Documents\Projects\3153\CAD\Sheets\Landscape\20-plnpln\sht-ls-021.dgn

20 0 20 40
SCALE IN FEET

N

LEGEND

- 6-INCHES BLACK EARTH WITH CLASS 1 (MODIFIED) SEEDING
- GLFER AREAS TEMPORARY IMPACT
- GLFER AREAS PERMANENT IMPACT
- TREE DRIP LINE
- TREE TRUNK PROTECTION
- TREE REMOVAL (SEE TREE REMOVAL SCHEDULE)
- LIMITS OF CONSTRUCTION
- SODDING, SALT TOLERANT




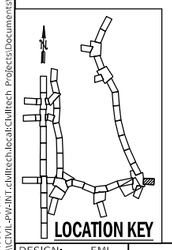


| | | | | |
|---|---|---|---|---|
| DESIGN: EML | | | | |
| DRAWN: EML | | | | |
| CHECKED: TKL | | | | |
| APPROVED: | NO. | BY | DATE | DESCRIPTION |
| DATE: 01/22/2021 | REVISIONS | | | |

CDOT CHICAGO DEPARTMENT OF TRANSPORTATION

C*NECT

LANDSCAPING PLAN
TREE REMOVAL AND PROTECTION
E. HAYES DR.

JACKSON PARK MOBILITY IMPROVEMENTS

STA. 5028+00 TO STA. 5029+50

| | |
|---|---|
| CONTRACT NO. - | TOTAL SHEETS 1434 |
| PROJECT NO. B-7-203 | SHEET NO. 625 |
| SCALE: 1"=20' | DRAWING NO. LS-22 |

PLOT DATE: 5/17/2021
PLOT SCALE: 40.0000 ' / in.
FILE NAME: pw:\\CIVIL-PW-INT.civiltech.local:CivilTech Projects:Documents\Projects\3153\tCADSheets\Landscape\26-plnpln\snt-ls-022.dgn

LEGEND

- 6-INCHES BLACK EARTH WITH CLASS 1 (MODIFIED) SEEDING
- GLFER AREAS TEMPORARY IMPACT
- GLFER AREAS PERMANENT IMPACT
- TREE DRIP LINE
- TREE TRUNK PROTECTION
- TREE REMOVAL (SEE TREE REMOVAL SCHEDULE)
- LIMITS OF CONSTRUCTION
- SODDING, SALT TOLERANT

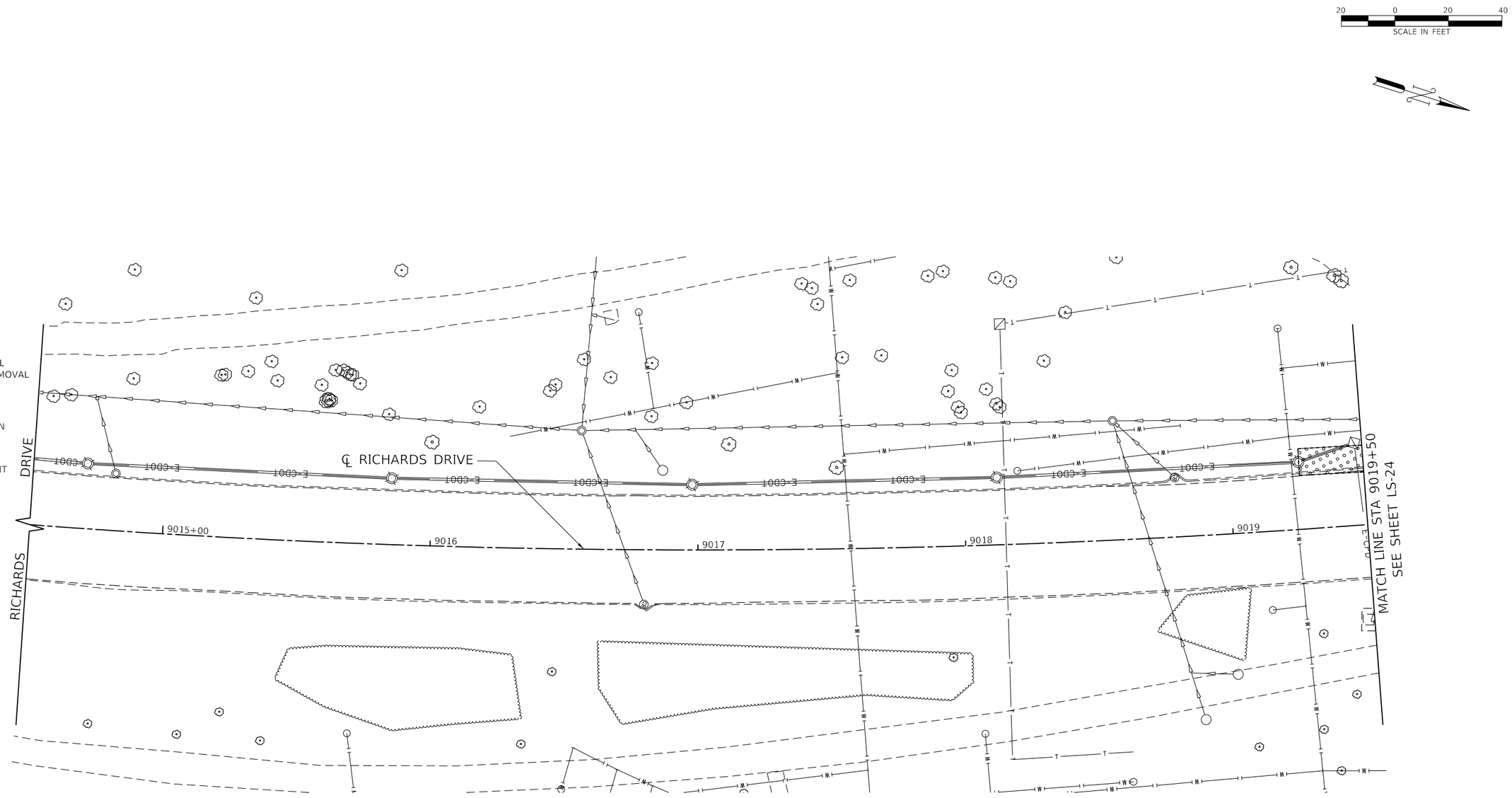


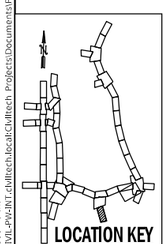


PLOT DATE: 5/17/2021
PLOT SCALE: 40.0000 ' / in.
FILE NAME: pw:\\CIVIL-PW-INT.civiltech.local:Civiltech Projects\Documents\Projects\3153\CAD\Sheets\Landscape\20-plnpln\sht-ls-023.dgn

| | | | | |
|---|---|---|---|---|
| DESIGN: EML | | | | |
| DRAWN: EML | | | | |
| CHECKED: TKL | | | | |
| APPROVED: | NO. | BY | DATE | DESCRIPTION |
| DATE: 01/22/2021 | REVISIONS | | | |

CDOT CHICAGO DEPARTMENT OF TRANSPORTATION

C*NECT

LANDSCAPING PLAN
TREE REMOVAL AND PROTECTION
S. RICHARDS DR.

JACKSON PARK MOBILITY IMPROVEMENTS

STA. 9014+50 TO STA. 9019+50

| | | |
|---|---|---|
| CONTRACT NO. - | TOTAL SHEETS 1434 | SHEET NO. 626 |
| PROJECT NO. B-7-203 | DRAWING NO. LS-23 | |
| SCALE: 1"=20' | | |




| | | | | |
|---|---|---|---|---|
| DESIGN: EML | | | | |
| DRAWN: EML | | | | |
| CHECKED: TKL | | | | |
| APPROVED: | NO. | BY | DATE | DESCRIPTION |
| DATE: 01/22/2021 | REVISIONS | | | |

CDOT CHICAGO DEPARTMENT OF TRANSPORTATION

C*NECT

LANDSCAPING PLAN
TREE REMOVAL AND PROTECTION
S. RICHARDS DR.

JACKSON PARK MOBILITY IMPROVEMENTS

STA. 9019+50 TO STA. 9023+58

| | | |
|---|---|---|
| CONTRACT NO. - | TOTAL SHEETS 1434 | SHEET NO. 627 |
| PROJECT NO. B-7-203 | DRAWING NO. LS-24 | |
| SCALE: 1"=20' | | |

PLOT DATE: 5/17/2021
PLOT SCALE: 40.0000 ' / in.
FILE NAME: pw:\\CIVIL-PW-INT.civiltech.local:Civiltech Projects\Documents\Projects\3153\CAD\Sheets\Landscape\20-plnpln\sht-ls-037.dgn

LEGEND

- 6-INCHES BLACK EARTH WITH CLASS 1 (MODIFIED) SEEDING
- GLFER AREAS TEMPORARY IMPACT
- GLFER AREAS PERMANENT IMPACT
- TREE DRIP LINE
- TREE TRUNK PROTECTION
- TREE REMOVAL (SEE TREE REMOVAL SCHEDULE)
- LIMITS OF CONSTRUCTION
- SODDING, SALT TOLERANT

20 0 20 40
SCALE IN FEET

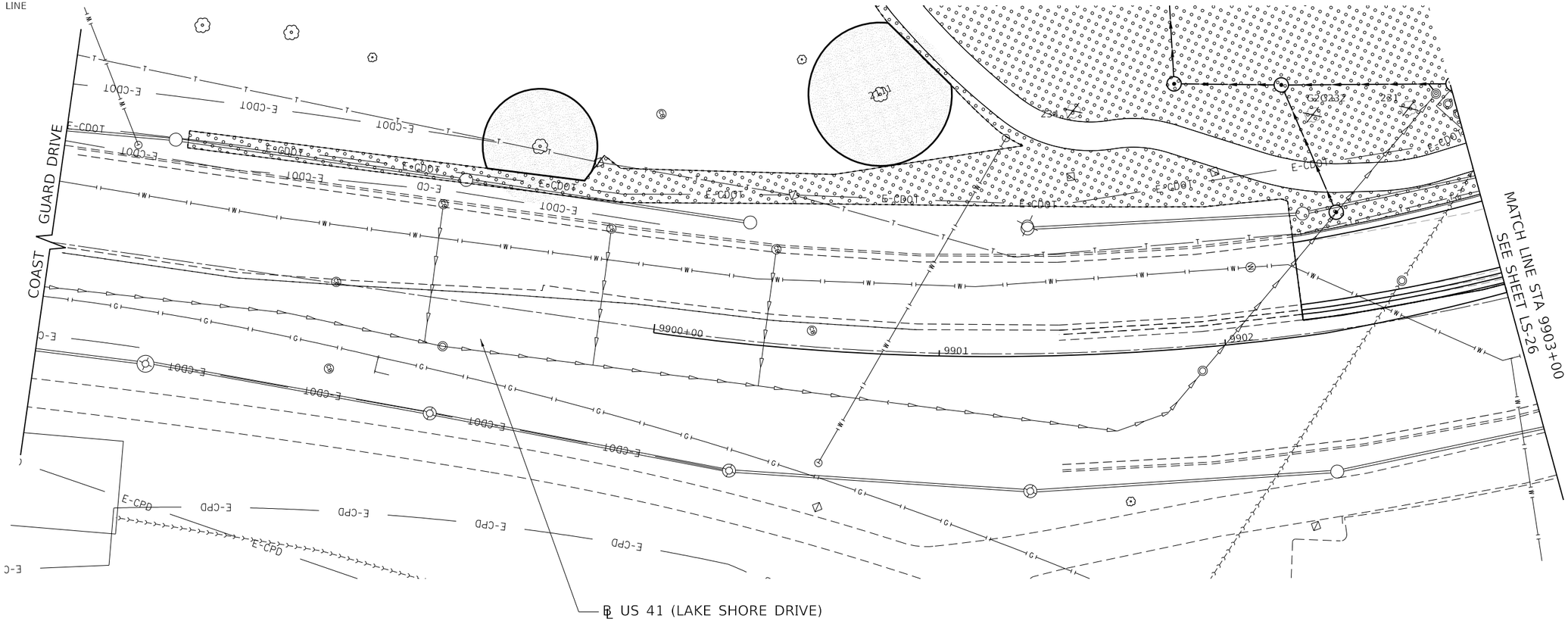


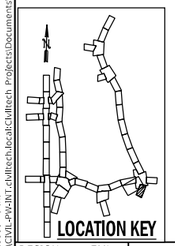


| | | | | |
|---|---|---|---|---|
| DESIGN: EML | | | | |
| DRAWN: EML | | | | |
| CHECKED: TKL | | | | |
| APPROVED: | NO. | BY | DATE | DESCRIPTION |
| DATE: 01/22/2021 | REVISIONS | | | |

CDOT CHICAGO DEPARTMENT OF TRANSPORTATION

C*NECT

LANDSCAPING PLAN
TREE REMOVAL AND PROTECTION
S. LAKE SHORE DR.

JACKSON PARK MOBILITY IMPROVEMENTS

STA. 9900+00 TO STA. 9903+00

| | |
|---|---|
| CONTRACT NO. - | TOTAL SHEETS 1434 |
| PROJECT NO. B-7-203 | SHEET NO. 628 |
| SCALE: 1"=20' | DRAWING NO. LS-25 |

PLOT DATE: 5/17/2021
PLOT SCALE: 40.0000 ' / in.
FILE NAME: pw:\\CIVIL-PW-NT.cdot.tech.local:CivilTech Projects:Documents\Projects\3153\CADD\Sheets\Landscape\26-plan\rsnt-ls-024.dgn

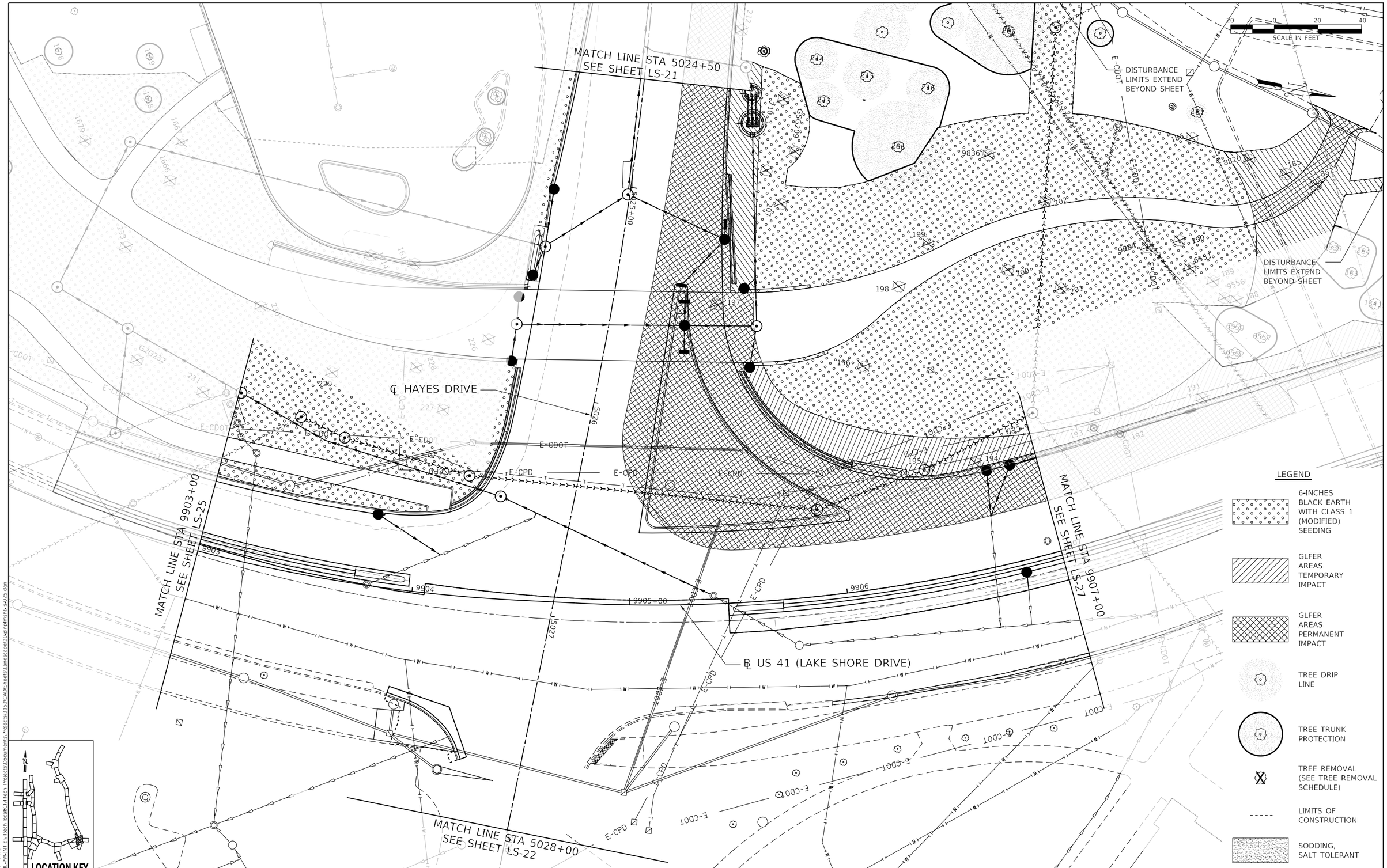


PLOT DATE: 5/17/2021
PLOT SCALE: 40.0000 ' / in.
FILE NAME: pw:\\CIVIL-PW-INT.civiltech.local:Civiltech Projects\Documents\Projects\3153\CAD\Sheets\Landscape\20-plnpln\sht-ls-025.dgn

| | | | | |
|---|---|---|---|---|
| DESIGN: EML | | | | |
| DRAWN: EML | | | | |
| CHECKED: TKL | | | | |
| APPROVED: | NO. | BY | DATE | DESCRIPTION |
| DATE: 01/22/2021 | REVISIONS | | | |

CDOT CHICAGO DEPARTMENT OF TRANSPORTATION

C*NECT

LANDSCAPING PLAN
TREE REMOVAL AND PROTECTION
S. LAKE SHORE DR.

JACKSON PARK MOBILITY IMPROVEMENTS

STA. 9903+00 TO STA. 9907+00

| | | |
|---|---|---|
| CONTRACT NO. - | TOTAL SHEETS 1434 | SHEET NO. 629 |
| PROJECT NO. B-7-203 | DRAWING NO. LS-26 | |
| SCALE: 1"=20' | | |

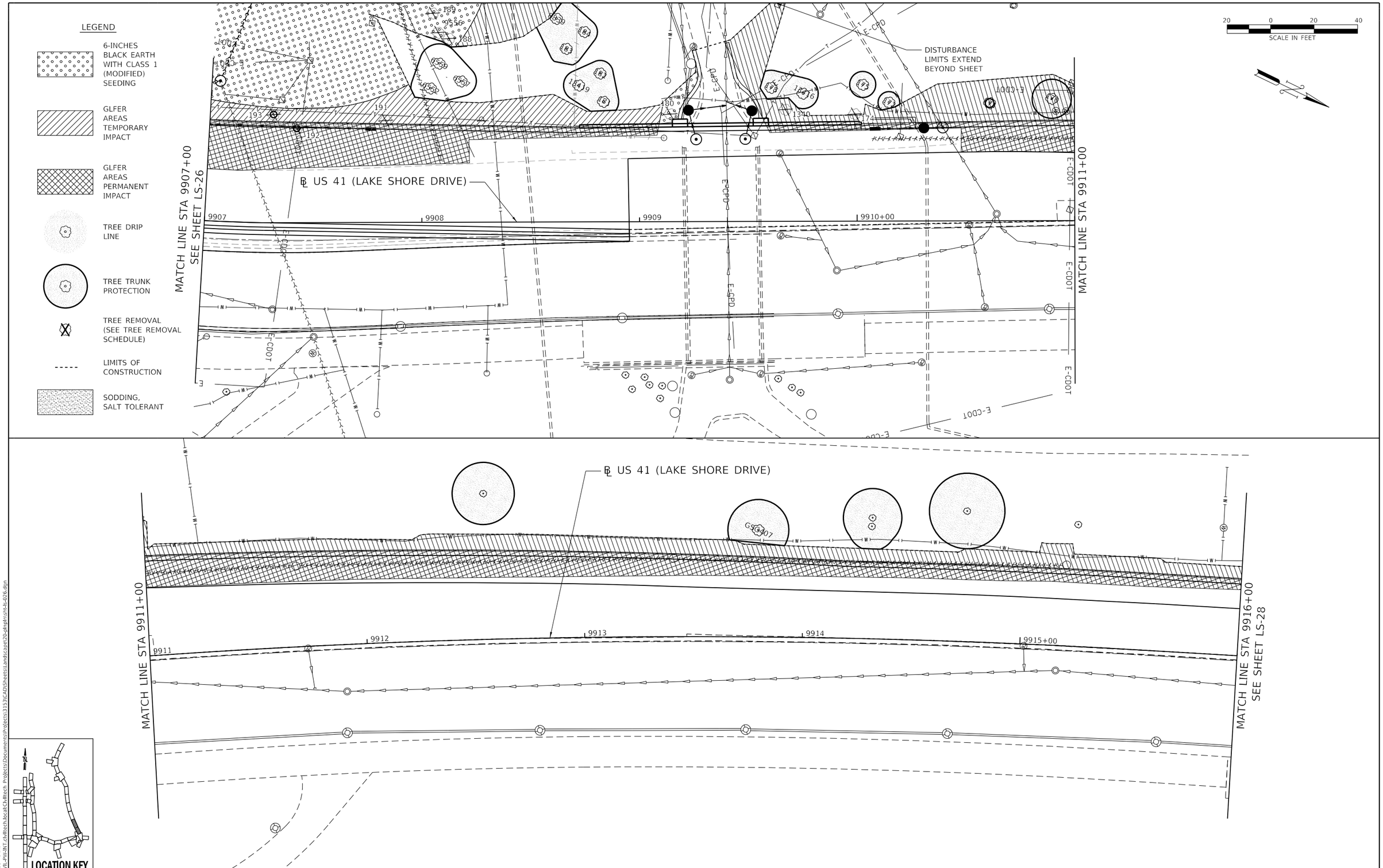


| DESIGN: EML | | | $REV3 | |
|---|---|---|---|---|
| DRAWN: EML | | | $REV2 | |
| CHECKED: TKL | | | $REV1 | |
| APPROVED: | NO. | BY | DATE | DESCRIPTION |
| DATE: 01/22/2021 | REVISIONS | | | |

CDOT CHICAGO DEPARTMENT OF TRANSPORTATION

C*NECT

LANDSCAPING PLAN
TREE REMOVAL AND PROTECTION
S. LAKE SHORE DR.

JACKSON PARK MOBILITY IMPROVEMENTS

STA. 9907+00 TO STA. 9916+00

CONTRACT NO. -
PROJECT NO. B-7-203
SCALE: 1"=20'

TOTAL SHEETS 1434
SHEET NO. 630
DRAWING NO. LS-27

PLOT DATE: 5/17/2021
PLOT SCALE: 40.0000 ' / in.
FILE NAME: pw:\\CIVIL-PW-INT.civiltech.local:Civiltech Projects\Documents\Projects\3153\CAD\Sheets\Landscape\20-plnpln\sht-ls-026.dgn

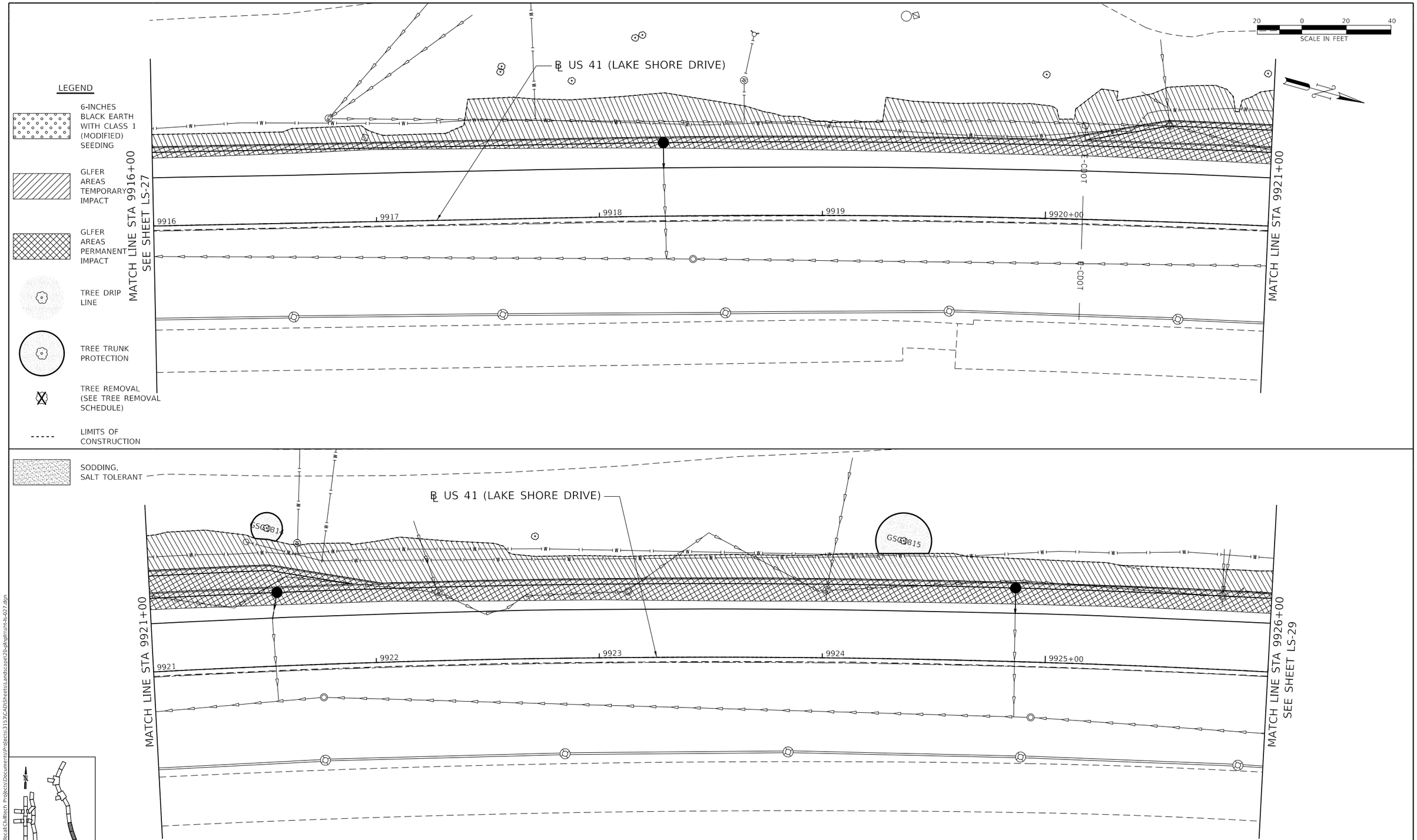


| | | | | |
|---|---|---|---|---|
| DESIGN: EML | | | SREV3 | |
| DRAWN: EML | | | SREV2 | |
| CHECKED: TKL | | | SREV1 | |
| APPROVED: | NO. | BY | DATE | DESCRIPTION |
| DATE: 01/22/2021 | REVISIONS | | | |

CDOT CHICAGO DEPARTMENT OF TRANSPORTATION

C*NECT

LANDSCAPING PLAN
TREE REMOVAL AND PROTECTION
S. LAKE SHORE DR.

JACKSON PARK MOBILITY IMPROVEMENTS

STA. 9916+00 TO STA. 9926+00

CONTRACT NO. -
PROJECT NO. B-7-203
SCALE: 1"=20'

| TOTAL SHEETS | SHEET NO. |
|---|---|
| 1434 | 631 |

DRAWING NO. LS-28

PLOT DATE: 5/17/2021
PLOT SCALE: 40.0000 ' / in.
FILE NAME: pw:\\CIVIL-PW-INT.civiltech.local:Civiltech Projects\Documents\Projects\3153\CAD\Sheets\Landscape\20-plnplnsht-ls-027.dgn

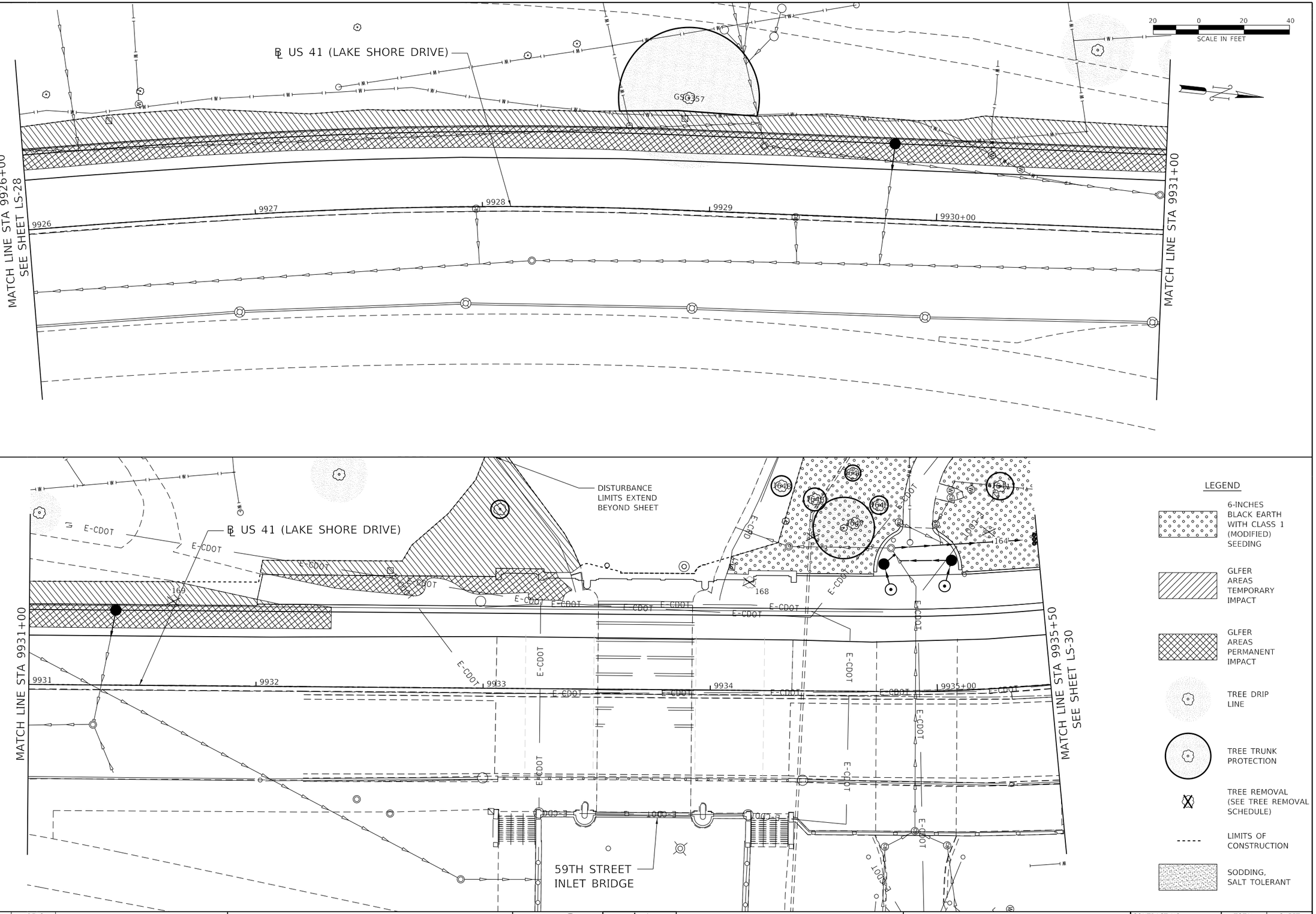


PLOT DATE: 5/17/2021
PLOT SCALE: 40.0000 ' / in.
FILE NAME: pw:\\CIVIL-PW-INT.civiltech.local:Civiltech Projects\Documents\Projects\3153\CAD\Sheets\Landscape\20-plnplnsht-ls-028.dgn

| | | | | |
|---|---|---|---|---|
| DESIGN: EML | | | $REV3 | |
| DRAWN: EML | | | $REV2 | |
| CHECKED: TKL | | | $REV1 | |
| APPROVED: | NO. | BY | DATE | DESCRIPTION |
| DATE: 01/22/2021 | REVISIONS | | | |

CDOT CHICAGO DEPARTMENT OF TRANSPORTATION

C*NECT

LANDSCAPING PLAN
TREE REMOVAL AND PROTECTION
S. LAKE SHORE DR.

JACKSON PARK MOBILITY IMPROVEMENTS

STA. 9926+00 TO STA. 9935+50

| | | |
|---|---|---|
| CONTRACT NO. - | TOTAL SHEETS 1434 | SHEET NO. 632 |
| PROJECT NO. B-7-203 | DRAWING NO. LS-29 | |
| SCALE: 1"=20' | | |

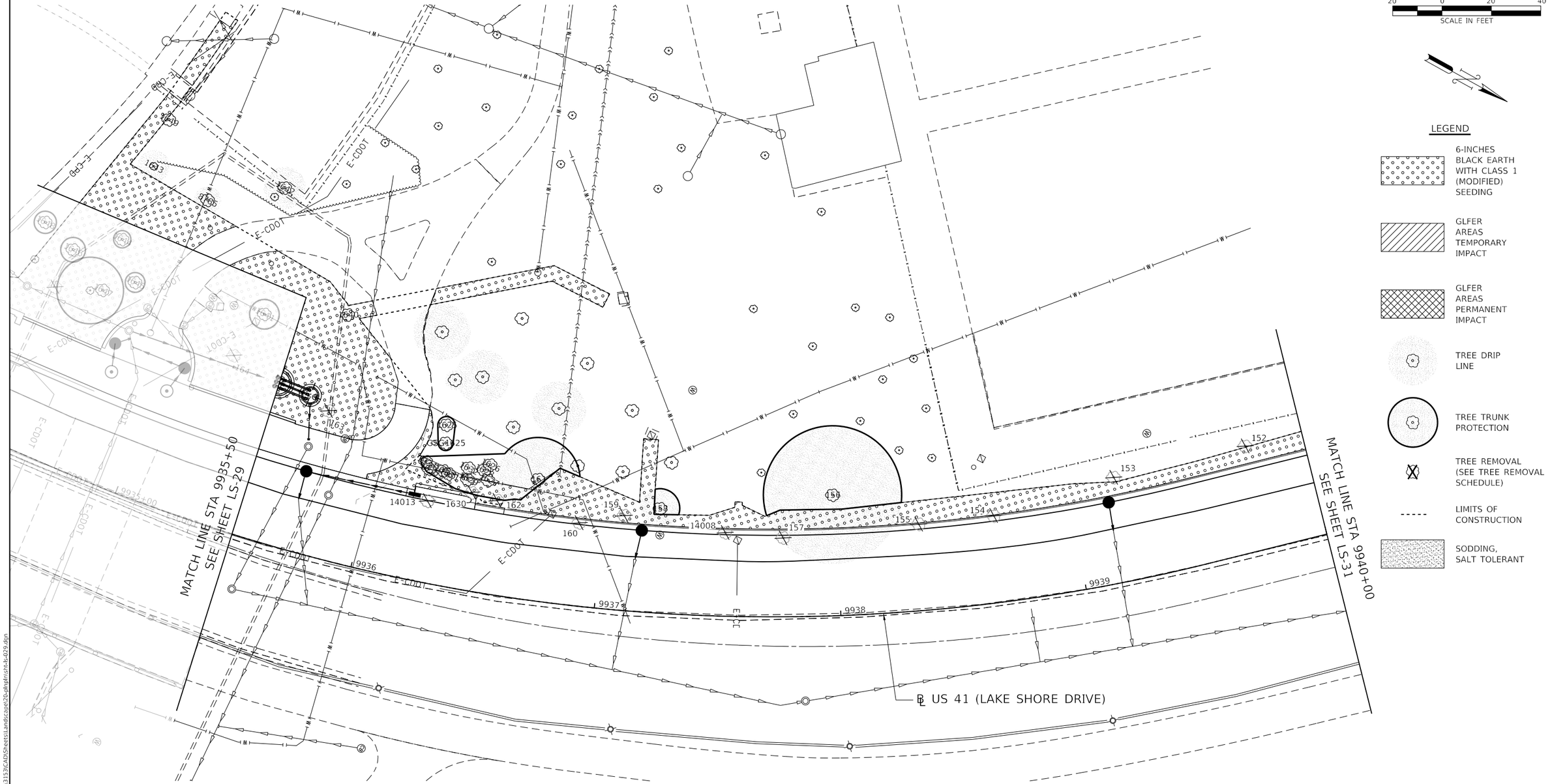


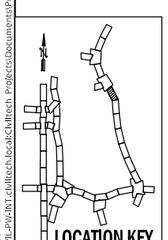


PLOT DATE: 5/17/2021
PLOT SCALE: 40.0000 ' / in.
FILE NAME: pw:\\CIVIL-PW-INT.civiltech.local:Civiltech Projects\Documents\Projects\3153\CAD\Sheets\Landscape\20-plnpln\sht-ls-029.dgn

| | | | | |
|---|---|---|---|---|
| DESIGN: EML | | | | |
| DRAWN: EML | | | | |
| CHECKED: TKL | | | | |
| APPROVED: | NO. | BY | DATE | DESCRIPTION |
| DATE: 01/22/2021 | REVISIONS | | | |

CDOT CHICAGO DEPARTMENT OF TRANSPORTATION

C*NECT

LANDSCAPING PLAN
TREE REMOVAL AND PROTECTION
S. LAKE SHORE DR.

JACKSON PARK MOBILITY IMPROVEMENTS

STA. 9935+50 TO STA. 9940+00

| | | |
|---|---|---|
| CONTRACT NO. - | TOTAL SHEETS 1434 | SHEET NO. 633 |
| PROJECT NO. B-7-203 | DRAWING NO. LS-30 | |
| SCALE: 1"=20' | | |

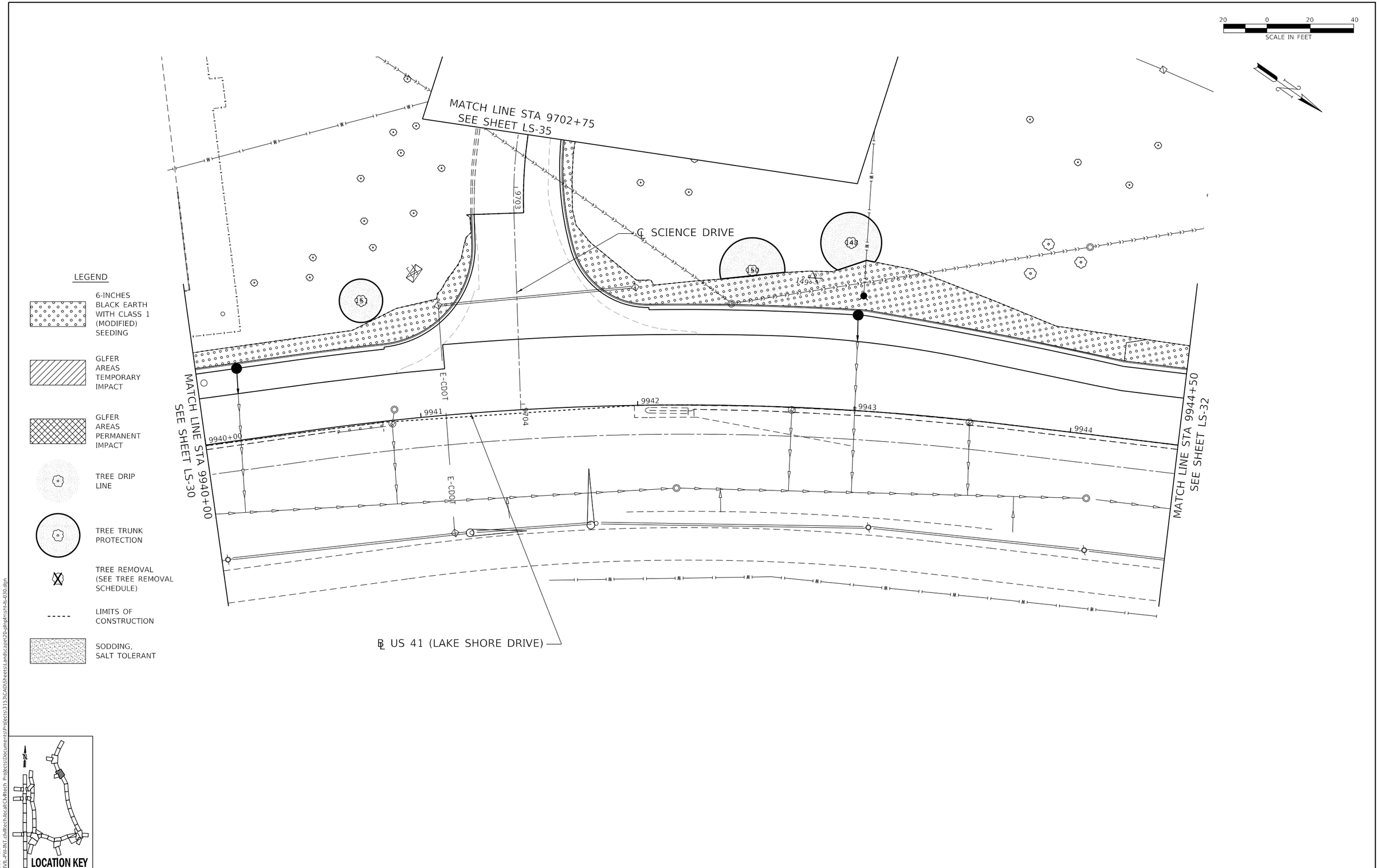


PLOT DATE: 5/17/2021
PLOT SCALE: 40.0000 ' / in.
FILE NAME: pw:\\CIVIL-PW-INT.civiltech.local:Civiltech Projects\Documents\Projects\3153\CAD\Sheets\Landscape\20-plnpln\sht-ls-030.dgn

| | | | | |
|---|---|---|---|---|
| DESIGN: EML | | | | |
| DRAWN: EML | | | | |
| CHECKED: TKL | | | | |
| APPROVED: | NO. | BY | DATE | DESCRIPTION |
| DATE: 01/22/2021 | REVISIONS | | | |

CDOT CHICAGO DEPARTMENT OF TRANSPORTATION

C*NECT

LANDSCAPING PLAN
TREE REMOVAL AND PROTECTION
S. LAKE SHORE DR.

JACKSON PARK MOBILITY IMPROVEMENTS

STA. 9940+00 TO STA. 9944+50

| | | |
|---|---|---|
| CONTRACT NO. - | TOTAL SHEETS | SHEET NO. |
| PROJECT NO. B-7-203 | 1434 | 634 |
| SCALE: 1"=20' | DRAWING NO. LS-31 | |

LEGEND

- 6-INCHES BLACK EARTH WITH CLASS 1 (MODIFIED) SEEDING
- GLFER AREAS TEMPORARY IMPACT
- GLFER AREAS PERMANENT IMPACT
- TREE DRIP LINE
- TREE TRUNK PROTECTION
- TREE REMOVAL (SEE TREE REMOVAL SCHEDULE)
- LIMITS OF CONSTRUCTION
- SODDING, SALT TOLERANT

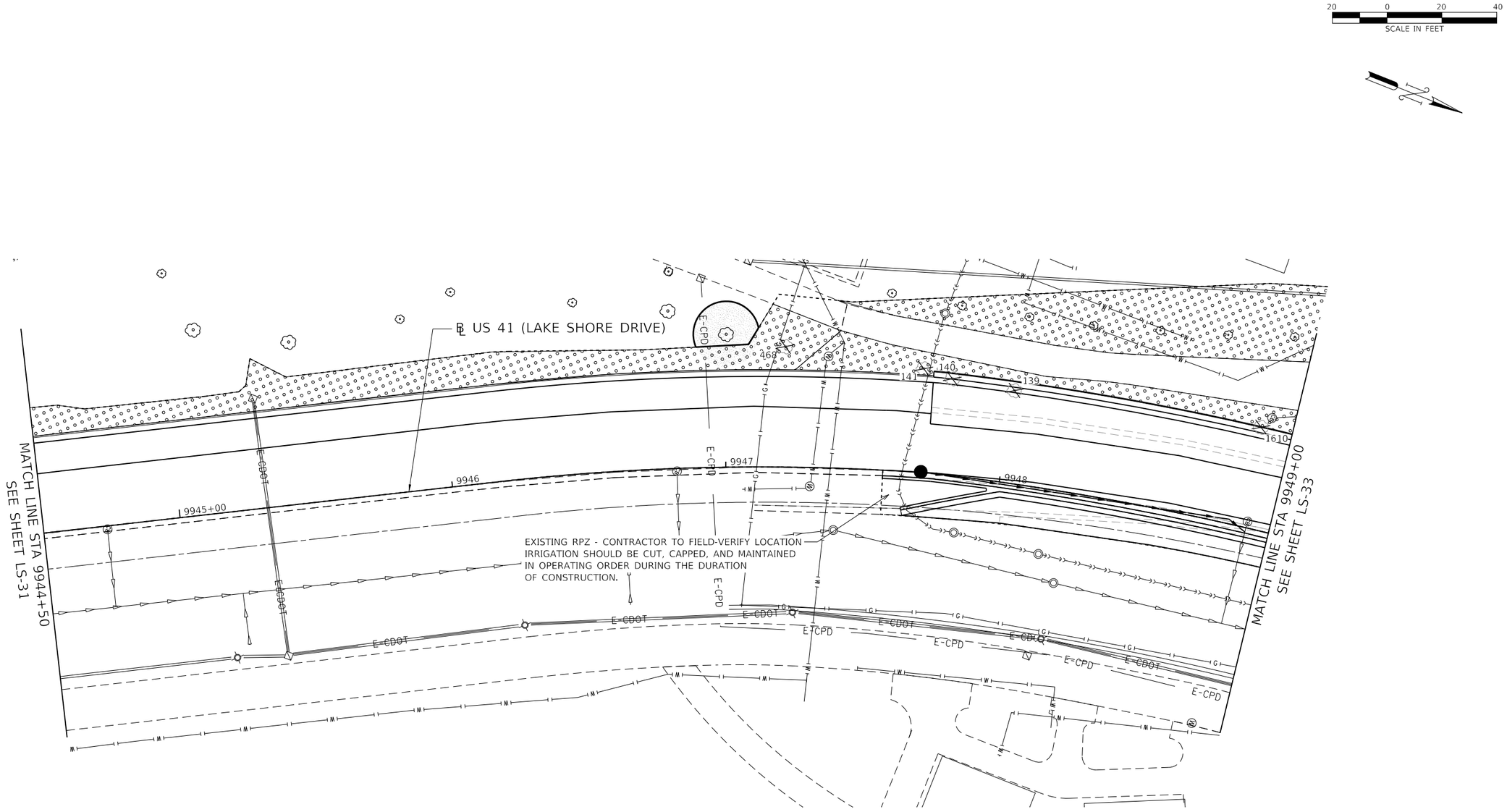


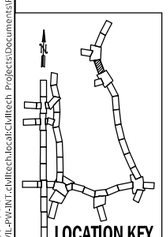


| | | | | |
|---|---|---|---|---|
| DESIGN: EML | | | | |
| DRAWN: EML | | | | |
| CHECKED: TKL | | | | |
| APPROVED: | NO. | BY | DATE | DESCRIPTION |
| DATE: 01/22/2021 | REVISIONS | | | |

CDOT CHICAGO DEPARTMENT OF TRANSPORTATION

C*NECT

LANDSCAPING PLAN
TREE REMOVAL AND PROTECTION
S. LAKE SHORE DR.

JACKSON PARK MOBILITY IMPROVEMENTS

STA. 9944+50 TO STA. 9949+00

| | | |
|---|---|---|
| CONTRACT NO. - | TOTAL SHEETS 1434 | SHEET NO. 635 |
| PROJECT NO. B-7-203 | DRAWING NO. LS-32 | |
| SCALE: 1"=20' | | |

PLOT DATE: 5/17/2021
PLOT SCALE: 40.0000 ' / in.
FILE NAME: pw:\\CIVIL-PW-INT.civiltech.local:Civiltech Projects\Documents\Projects\3153\CAD\Sheets\Landscape\20-plnpln\sht-ls-031.dgn

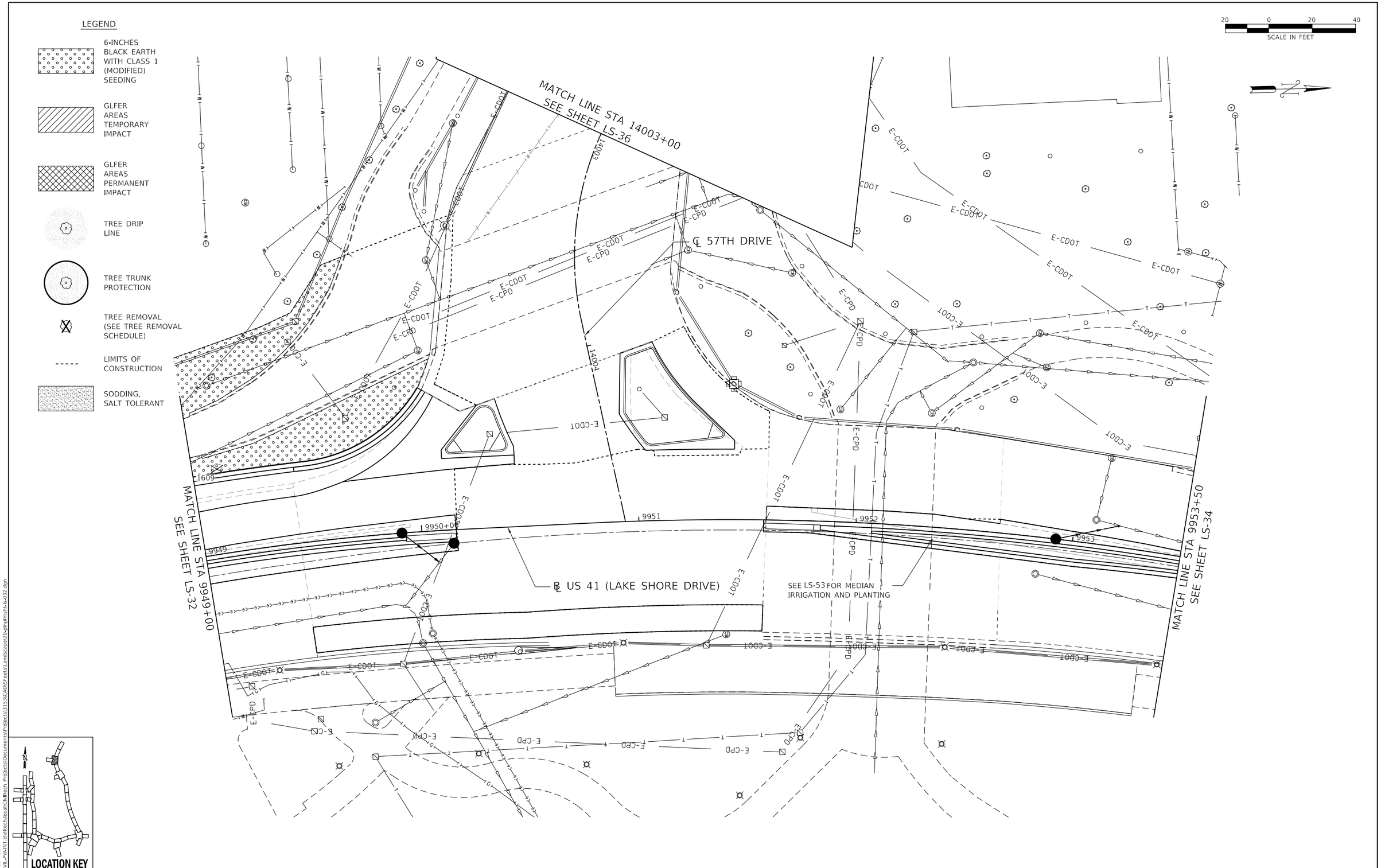


| | | | | |
|---|---|---|---|---|
| DESIGN: EML | | | | |
| DRAWN: EML | | | | |
| CHECKED: TKL | | | | |
| APPROVED: | NO. | BY | DATE | DESCRIPTION |
| DATE: 01/22/2021 | REVISIONS | | | |

CDOT CHICAGO DEPARTMENT OF TRANSPORTATION

C*NECT

LANDSCAPING PLAN
TREE REMOVAL AND PROTECTION
S. LAKE SHORE DR.

JACKSON PARK MOBILITY IMPROVEMENTS

STA. 9949+00 TO STA. 9953+50

| | | |
|---|---|---|
| CONTRACT NO. - | TOTAL SHEETS 1434 | SHEET NO. 636 |
| PROJECT NO. B-7-203 | DRAWING NO. LS-33 | |
| SCALE: 1"=20' | | |

PLOT DATE: 5/17/2021
PLOT SCALE: 40.0000 ' / in.
FILE NAME: pw:\\CIVIL-PW-INT.civiltech.local:Civiltech Projects\Documents\Projects\3153\CAD\Sheets\Landscape\20-plnpln\sht-ls-032.dgn

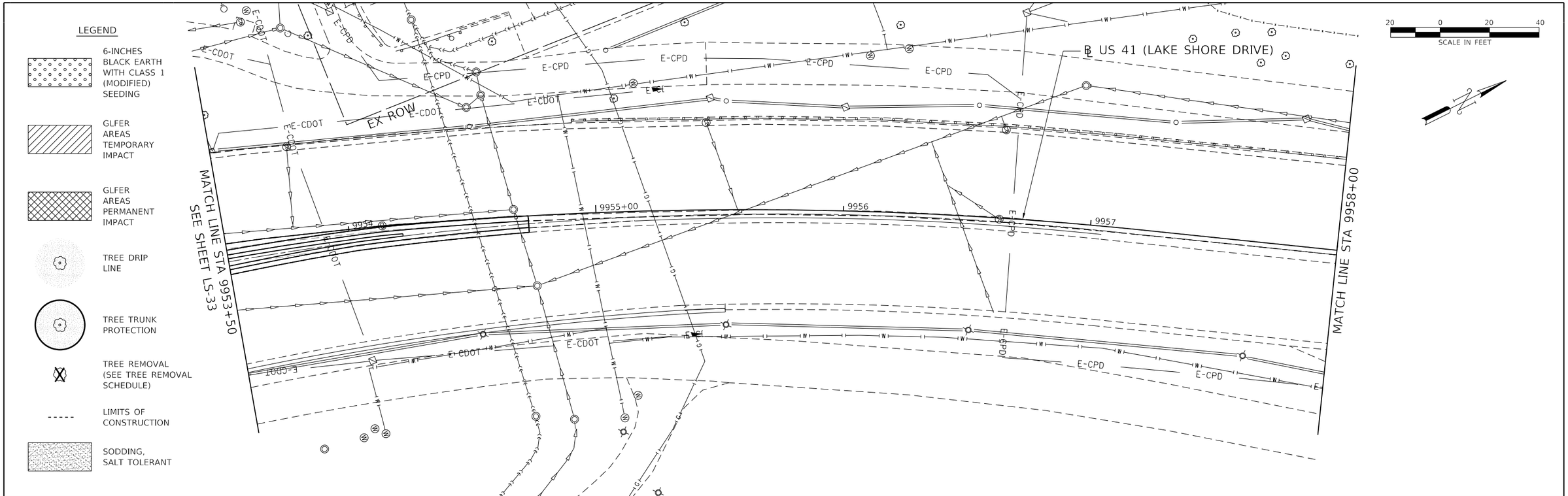


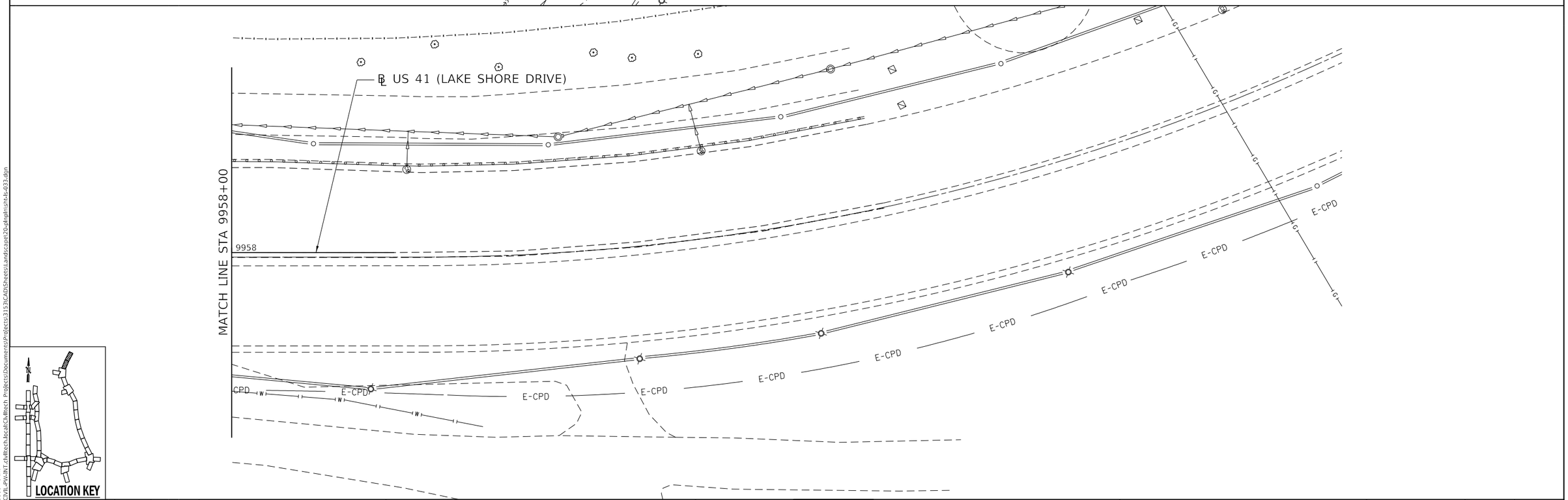





PLOT DATE: 5/17/2021
PLOT SCALE: 40.0000 ' / in.
FILE NAME: pw:\\CIVIL-PW-INT.civiltech.local:Civiltech Projects\Documents\Projects\3153\CAD\Sheets\Landscape\20-plnpln\sht-ls-033.dgn

| | | | | |
|---|---|---|---|---|
| DESIGN: EML | | | SREV3 | |
| DRAWN: EML | | | SREV2 | |
| CHECKED: TKL | | | SREV1 | |
| APPROVED: | NO. | BY | DATE | DESCRIPTION |
| DATE: 01/22/2021 | REVISIONS | | | |

CDOT CHICAGO DEPARTMENT OF TRANSPORTATION

C*NECT

LANDSCAPING PLAN
TREE REMOVAL AND PROTECTION
S. LAKE SHORE DR.

JACKSON PARK MOBILITY IMPROVEMENTS

STA. 9953+50 TO STA. 9958+50

| | | |
|---|---|---|
| CONTRACT NO. - | TOTAL SHEETS 1434 | SHEET NO. 637 |
| PROJECT NO. B-7-203 | DRAWING NO. LS-34 | |
| SCALE: 1"=20' | | |

LEGEND

- 6-INCHES BLACK EARTH WITH CLASS 1 (MODIFIED) SEEDING
- GLFER AREAS TEMPORARY IMPACT
- GLFER AREAS PERMANENT IMPACT
- TREE DRIP LINE
- TREE TRUNK PROTECTION
- TREE REMOVAL (SEE TREE REMOVAL SCHEDULE)
- LIMITS OF CONSTRUCTION
- SODDING, SALT TOLERANT




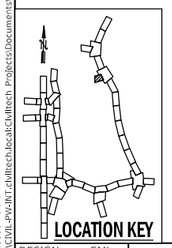


LOCATION KEY

| | | | | |
|---|---|---|---|---|
| DESIGN: EML | | | | |
| DRAWN: EML | | | | |
| CHECKED: TKL | | | | |
| APPROVED: | NO. | BY | DATE | DESCRIPTION |
| DATE: 01/22/2021 | REVISIONS | | | |

CDOT CHICAGO DEPARTMENT OF TRANSPORTATION

C*NECT

LANDSCAPING PLAN
TREE REMOVAL AND PROTECTION
E. SCIENCE DR.

JACKSON PARK MOBILITY IMPROVEMENTS

STA. 9700+00 TO STA. 9702+50

| | | |
|---|---|---|
| CONTRACT NO. - | TOTAL SHEETS 1434 | SHEET NO. 638 |
| PROJECT NO. B-7-203 | DRAWING NO. LS-35 | |
| SCALE: 1"=20' | | |

PLOT DATE: 5/17/2021
PLOT SCALE: 40.0000 ' / in.
FILE NAME: pw:\\CIVIL-PW-INT.civiltech.local:Civiltech Projects\Documents\Projects\3153\CAD\Sheets\Landscape\20-plnpln\sht-ls-034.dgn

LEGEND

- 6-INCHES BLACK EARTH WITH CLASS 1 (MODIFIED) SEEDING
- GLFER AREAS TEMPORARY IMPACT
- GLFER AREAS PERMANENT IMPACT
- TREE DRIP LINE
- TREE TRUNK PROTECTION
- TREE REMOVAL (SEE TREE REMOVAL SCHEDULE)
- LIMITS OF CONSTRUCTION
- SODDING, SALT TOLERANT

20 0 20 40
SCALE IN FEET

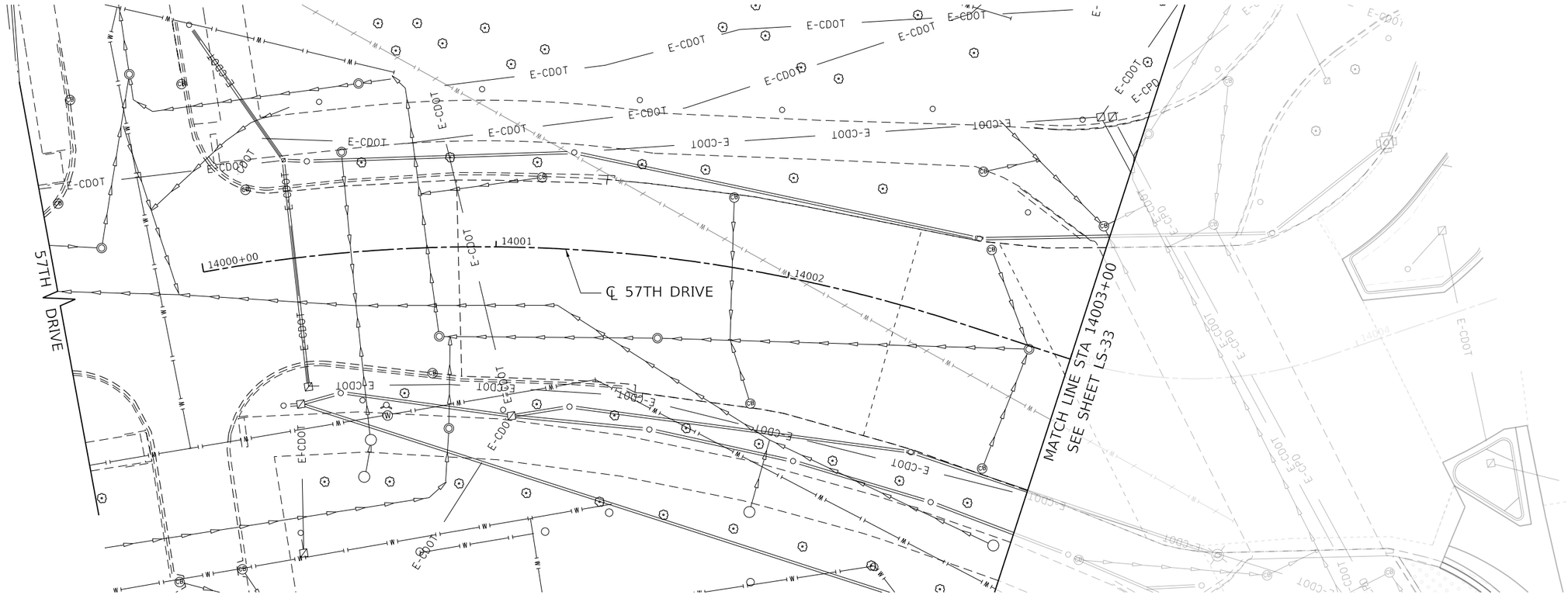


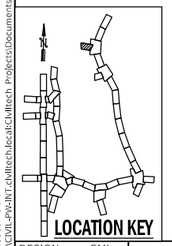


| | | | | |
|---|---|---|---|---|
| DESIGN: EML | | | | |
| DRAWN: EML | | | | |
| CHECKED: TKL | | | | |
| APPROVED: | NO. | BY | DATE | DESCRIPTION |
| DATE: 01/22/2021 | REVISIONS | | | |

CDOT CHICAGO DEPARTMENT OF TRANSPORTATION

C*NECT

LANDSCAPING PLAN
TREE REMOVAL AND PROTECTION
E. 57TH DR.

JACKSON PARK MOBILITY IMPROVEMENTS

STA. 14000+00 TO STA. 14003+00

| | | |
|---|---|---|
| CONTRACT NO. - | TOTAL SHEETS 1434 | SHEET NO. 639 |
| PROJECT NO. B-7-203 | DRAWING NO. LS-36 | |
| SCALE: 1"=20' | | |

PLOT DATE: 5/17/2021
PLOT SCALE: 40.0000 ' / in.
FILE NAME: pw:\\CIVIL-PW-INT.civiltech.local:Civiltech Projects\Documents\Projects\3153\CAD\Sheets\Landscape\20-plnpln\sht-ls-035.dgn

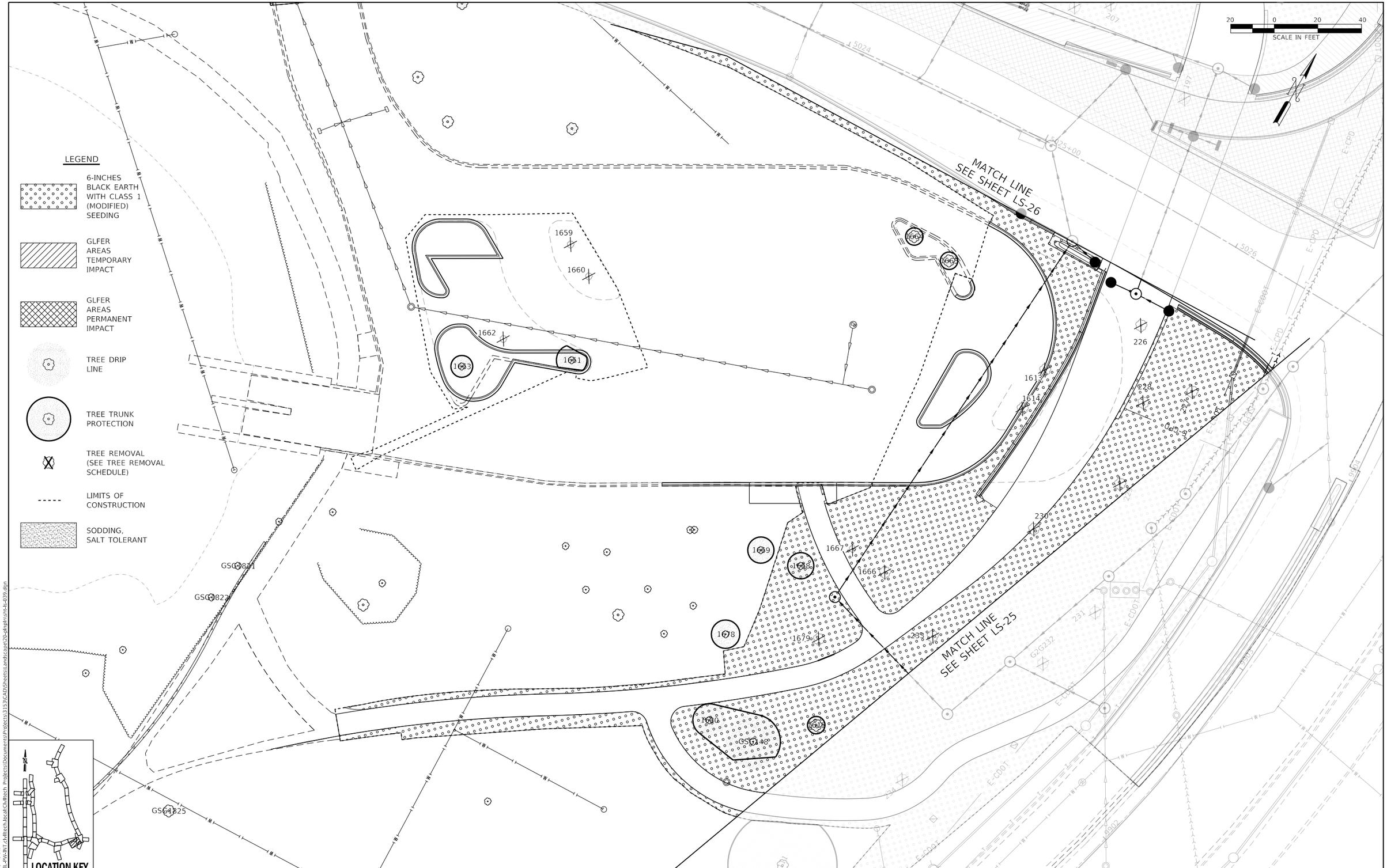


| | | | | |
|---|---|---|---|---|
| DESIGN: EML | | | | |
| DRAWN: EML | | | | |
| CHECKED: TKL | | | | |
| APPROVED: | NO. | BY | DATE | DESCRIPTION |
| DATE: 01/22/2021 | REVISIONS | | | |

CDOT CHICAGO DEPARTMENT OF TRANSPORTATION

C*NECT

LANDSCAPING PLAN
TREE REMOVAL AND PROTECTION
BOAT LAUNCH PARKING LOT

JACKSON PARK MOBILITY IMPROVEMENTS

STA. 5020+15 TO STA. 5025+80

| | | |
|---|---|---|
| CONTRACT NO. - | TOTAL SHEETS 1434 | SHEET NO. 640 |
| PROJECT NO. B-7-203 | DRAWING NO. LS-37 | |
| SCALE: 1"=20' | | |

PLOT DATE: 5/17/2021
PLOT SCALE: 40.0000 ' / in.
FILE NAME: pw:\\CIVIL-PW-INT.civiltech.local:Civiltech Projects\Documents\Projects\3153\CAD\Sheets\Landscape\20-plnpln\sht-ls-039.dgn

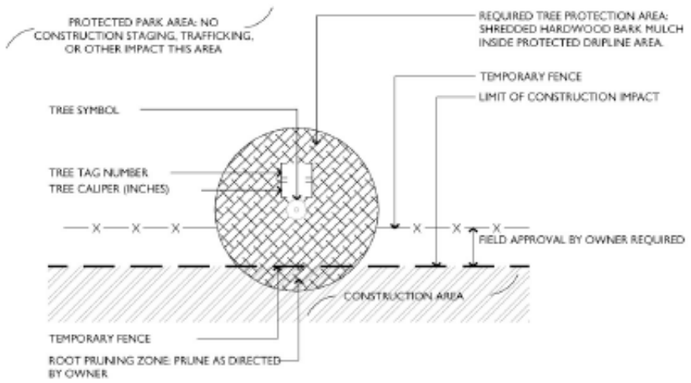


**1** TEMPORARY FENCE INTERSECTS TREE DRIPLINE; ROOTPRUNING REQUIRED
N.T.S.

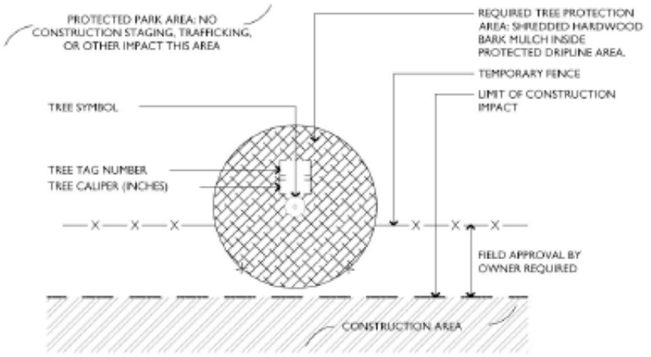


**4** TEMPORARY FENCE INTERSECTS TREE DRIPLINE; NO ROOTPRUNING REQUIRED
N.T.S.

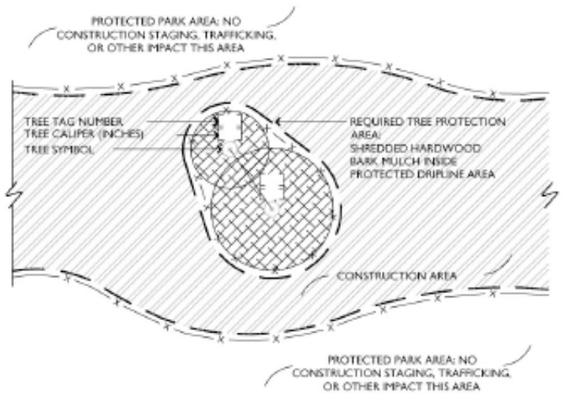


**7** TEMPORARY FENCE PROTECTING TREES ENTIRELY WITHIN CONSTRUCTION AREA
N.T.S.

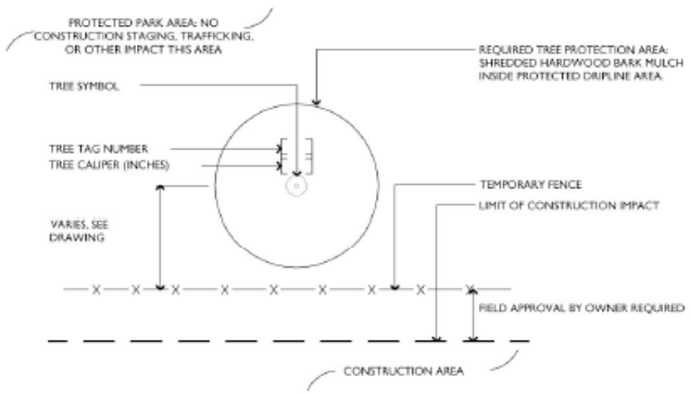


**2** TYPICAL TEMPORARY FENCE FOR TREE AND PARK PROTECTION
N.T.S.

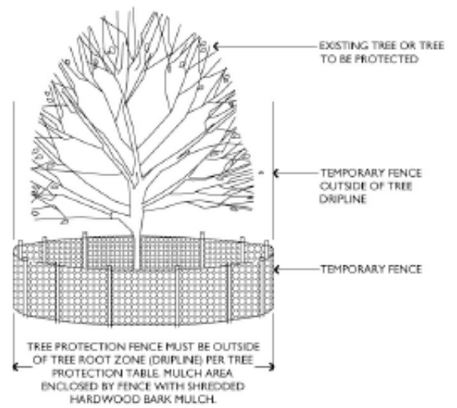


**5** TYPICAL TREE PROTECTION ENTIRELY WITHIN CONSTRUCTION AREA
N.T.S.

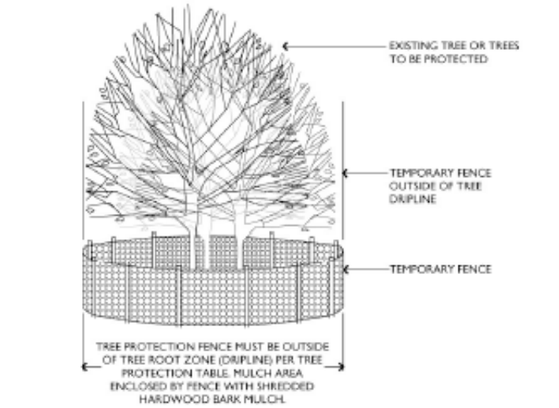


**8** TYPICAL GROUP TREE PROTECTION ENTIRELY WITHIN CONSTRUCTION AREA
N.T.S.

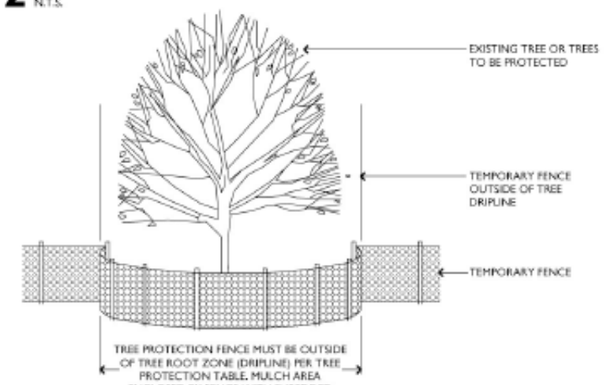


**3** TEMPORARY FENCE INTERSECTS TREE DRIPLINE; NO ROOTPRUNING REQUIRED
N.T.S.

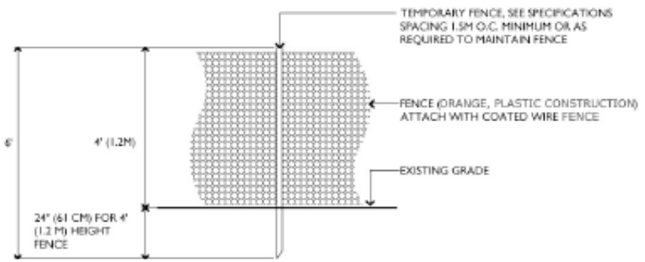


**6** TYPICAL TREE PROTECTION FENCE
N.T.S.

| TREE PROTECTION | MEASURED TREE CALIPER | RADIUS OF TREE PROTECTION FENCE AT EDGE OF DRIPLINE | MULCH RADIUS UNDER ENTIRE DRIPLINE |
|---|---|---|---|
| PROTECTED PARK AREA | VARIES | NONE, TREE PROTECTED BY TEMPORARY FENCE AT PROTECTION LIMITS | NONE |
| TREE WITH THE DRIPLINE INTERSECTING THE TEMPORARY FENCE | 0 CM-20.3 CM (0"-8") | MINIMUM 2.44M (8') OR AS APPROVED BY COMMISSIONER. | YES |
| TREE WITH THE DRIPLINE INTERSECTING THE TEMPORARY FENCE | >20.3 CM-63.5 CM (>8"-25") | 0.304BM (1') RADIUS FENCE FOR EACH 2.54CM (1") CALIPER OR AS APPROVED BY COMMISSIONER. | YES |
| TREE WITH THE DRIPLINE INTERSECTING THE TEMPORARY FENCE | >63.5 CM (>25") | MINIMUM 2.44M (8') OR AS APPROVED BY COMMISSIONER. | YES |
| TREE WITH THE DRIPLINE INTERSECTING THE TEMPORARY FENCE, ROOTPRUNED | 0 CM-20.3 CM (0"-8") | MINIMUM 2.44M (8') OR AS APPROVED BY COMMISSIONER. | YES |
| TREE WITH THE DRIPLINE INTERSECTING THE TEMPORARY FENCE, ROOTPRUNED | >20.3 CM-63.5 CM (>8"-25") | 0.304BM (1') RADIUS FENCE FOR EACH 2.54CM (1") CALIPER OR AS APPROVED BY COMMISSIONER. | YES |
| TREE WITH THE DRIPLINE INTERSECTING THE TEMPORARY FENCE, ROOTPRUNED | >63.5 CM (>25") | MINIMUM 2.44M (8') OR AS APPROVED BY COMMISSIONER. | YES |
| TREE TO BE RELOCATED | 0 CM-20.3 CM (0"-8") | NONE, TREE PROTECTED BY TEMPORARY FENCE AT PROTECTION LIMITS | YES, IF PROTECTED |
| TREE TO BE REMOVED | NONE | TREES MUST BE REMOVED PRIOR TO START OF CONSTRUCTION | NONE |

**9** TREE PROTECTION NOTES AND TABLE
N.T.S.

CHICAGO PARK DISTRICT
541 North Fairbanks
Chicago, Illinois
60611

PROJECT MANAGER
PROJECT MANAGER
DIRECTOR OF ENGINEERING

PROJ. MGR.:
DESIGNER:
DRAWN:
CHECKED:
SCALE: AS NOTED
DATE:
SPEC. NO.:
JOB NO.:

SHEET INFORMATION

CPD STANDARD DRAWING
TREE PROTECTION DETAIL

PARK NO./PROJECT NO.
CPD STANDARD DRAWING
ST-872 -L1
DRAWING NO.

© CHICAGO PARK DISTRICT

PLOT DATE: 5/17/2021
PLOT SCALE: 2.0000 ' / in.
FILE NAME: pw:\\CIVIL-PW-NT.civiltech.local:Civiltech Projects\Documents\Projects\3153\CADSheets\Landscape\20-plnp\nsht-ls-038.dgn

| | | | | | |
|---|---|---|---|---|---|
| DESIGN: EML | | | | | |
| DRAWN: EML | | | | | |
| CHECKED: TKL | | | | | |
| APPROVED: | NO. | BY | DATE | DESCRIPTION | |
| DATE: 01/22/2021 | REVISIONS | | | | |

CDOT CHICAGO DEPARTMENT OF TRANSPORTATION

C*NECT

LANDSCAPING PLAN
TREE PROTECTION DETAILS

JACKSON PARK MOBILITY IMPROVEMENTS

STA. TO STA.

CONTRACT NO. -
PROJECT NO. B-7-203
SCALE: NONE

TOTAL SHEETS 1434
SHEET NO. 641
DRAWING NO. LS-38

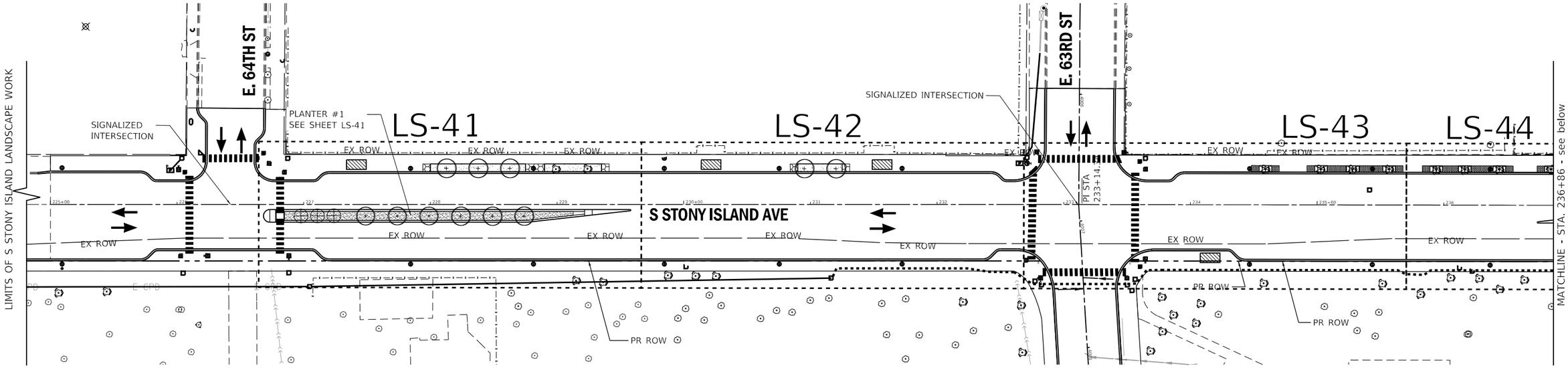


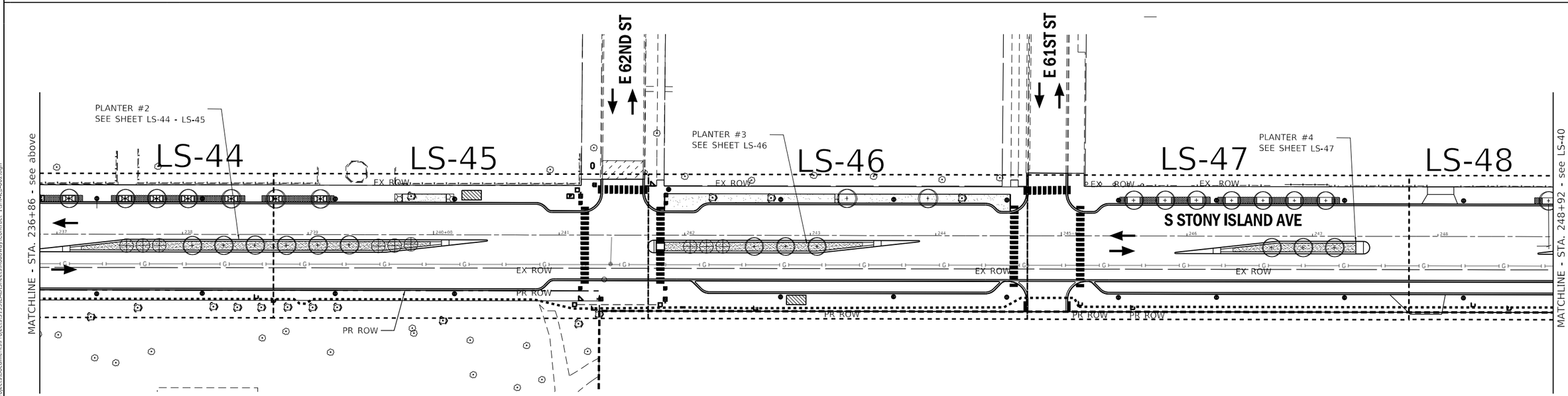


## LOCATION KEY

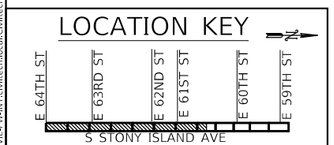


## LEGEND

- SHADE TREES
- ORNAMENTAL TREES

40 0 40 80
SCALE IN FEET

| | | | | |
|---|---|---|---|---|
| DESIGN: JDM | | | SREV3 | |
| DRAWN: JDM | | | SREV2 | |
| CHECKED: PJH | | | SREV1 | |
| APPROVED: | NO. | BY | DATE | DESCRIPTION |
| DATE: 01/22/2021 | REVISIONS | | | |

CDOT CHICAGO DEPARTMENT OF TRANSPORTATION

C*NECT

LANDSCAPING PLAN
PROPOSED PLANTING
S. STONY ISLAND AVE.

JACKSON PARK MOBILITY IMPROVEMENTS

STA. TO STA.

| | | |
|---|---|---|
| CONTRACT NO. - | TOTAL SHEETS 1434 | SHEET NO. 642 |
| PROJECT NO. B-7-203 | DRAWING NO. LS-39 | |
| SCALE: 1"=40' | | |

PLOT DATE: 5/17/2021
PLOT SCALE: 80.0000 ' / in.
FILE NAME: pw:\\CIVIL-PW-INT.civiltech.local:Civiltech Projects\Documents\Projects\3153\CAD\Sheets\Roadway\Contract 1\sht-lcp-002.dgn

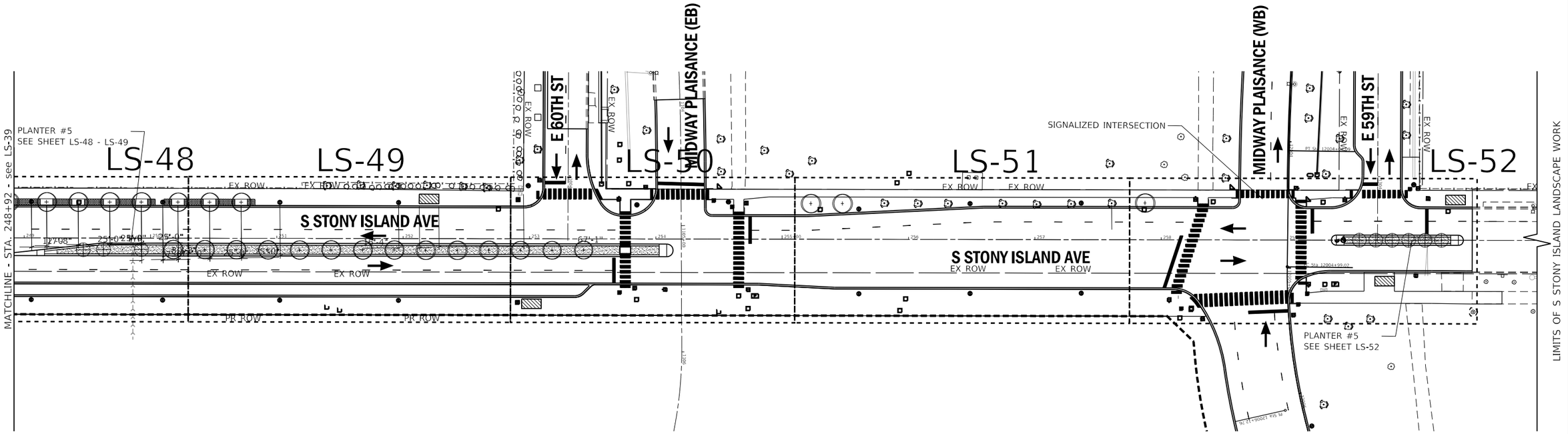


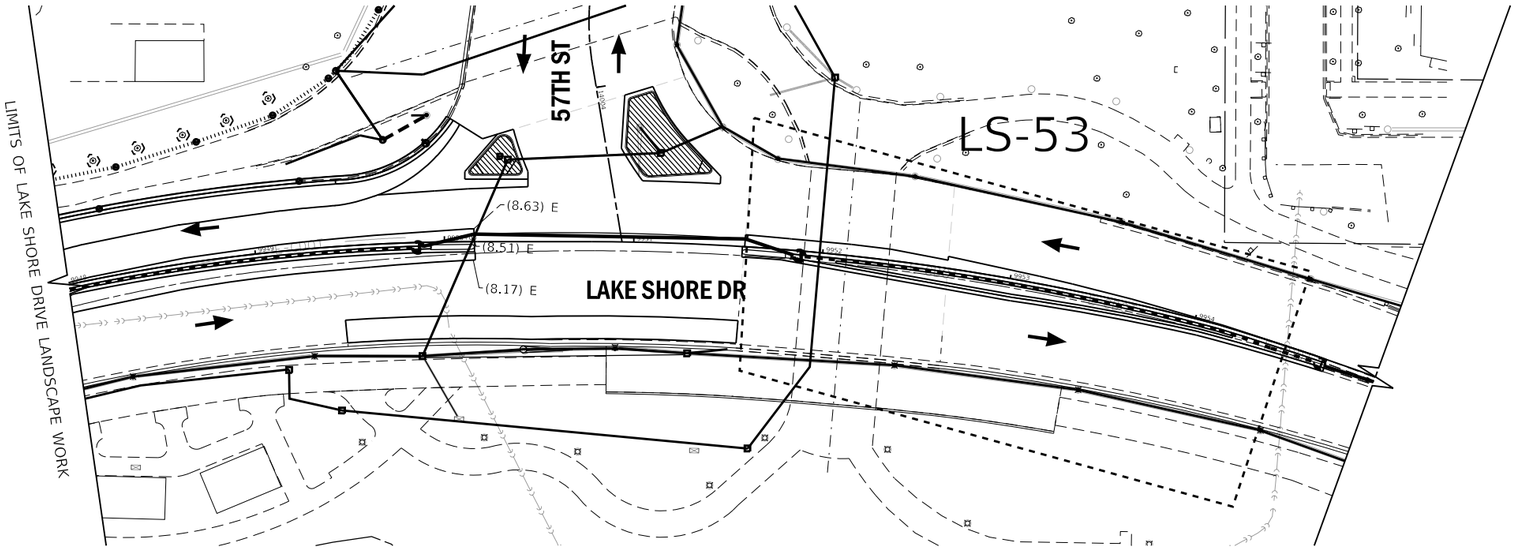


## LOCATION KEY

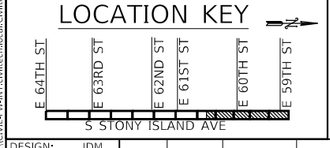


## LEGEND

- SHADE TREES
- ORNAMENTAL TREES

40 0 40 80
SCALE IN FEET

| | | | | |
|---|---|---|---|---|
| DESIGN: JDM | | | | |
| DRAWN: JDM | | | | |
| CHECKED: PJH | | | | |
| APPROVED: | NO. | BY | DATE | DESCRIPTION |
| DATE: 01/22/2021 | REVISIONS | | | |

CDOT CHICAGO DEPARTMENT OF TRANSPORTATION

C*NECT

LANDSCAPING PLAN
PROPOSED PLANTING
S. STONY ISLAND AVE.

JACKSON PARK MOBILITY IMPROVEMENTS

STA. TO STA.

| | | |
|---|---|---|
| CONTRACT NO. - | TOTAL SHEETS 1434 | SHEET NO. 643 |
| PROJECT NO. B-7-203 | DRAWING NO. LS-40 | |
| SCALE: 1"=40' | | |

PLOT DATE: 5/17/2021
PLOT SCALE: 80.0000 ' / in.
FILE NAME: pw:\\CIVIL-PW-INT.civiltech.local:Civiltech Projects\Documents\Projects\3153\CAD\Sheets\Roadway\Contract 1\sht-lcp-004.dgn

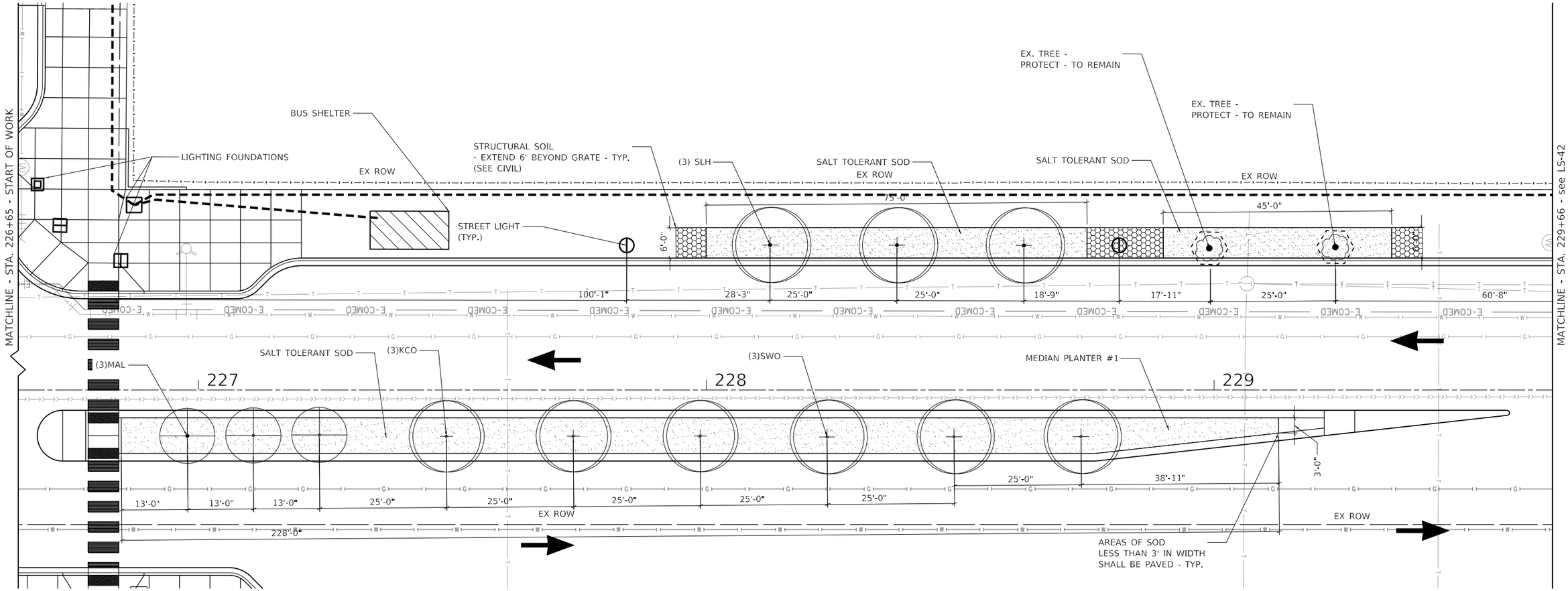


## MEDIAN PLANTER #1

1525 SF
228 LF

## LEGEND

- SHADE TREE
- ORNAMENTAL TREE
- TREE GRATE
- SALT TOLERANT SOD
- STRUCTURAL SOIL
- STREET LIGHT
- EXISTING TREE

## LOCATION KEY

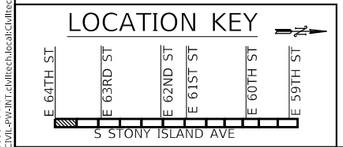


**LS-41 PLANT SCHEDULE**

**MEDIAN TREES**

| CODE | QTY | BOTANIC NAME | COMMON NAME | SIZE | COMMENTS |
|---|---|---|---|---|---|
| SWO | 3 | SWAMP WHITE OAK | QUERCUS BICOLOR | 2.5"-3" B&B | |
| ULM | - | NEW HORIZON ELM | ULMUS 'NEW HORIZON' | 2.5"-3" B&B | |
| COC | - | HACKBERRY | CELTIS OCCIDENTALIS | 2.5"-3" B&B | |
| KCO | 3 | KENTUCKY COFFEE | GYMNOCLADUS DIOICUS | 2.5"-3" B&B | |
| MAL | 3 | CRABAPPLE | MALUS 'RED JEWEL' | 2.5"-3" B&B | |
| SYR | - | IVORY SILK LILAC | SYRINGA RETICULATA | 2.5" - 3" B&B | |

**NEW PARKWAY AND TREE PIT TREES**

| CODE | QTY | BOTANIC NAME | COMMON NAME | SIZE | COMMENTS |
|---|---|---|---|---|---|
| SWO | - | SWAMP WHITE OAK | QUERCUS BICOLOR | 2.5"-3" B&B | |
| SLH | 3 | SKYLINE HONEYLOCUST | GLEDITSIA TRIACANTHOS 'SKYLINE' | 2.5"-3" B&B | |
| ULM | - | NEW HORIZON ELM | ULMUS 'NEW HORIZON' | 2.5"-3" B&B | |
| COC | - | HACKBERRY | CELTIS OCCIDENTALIS | 2.5"-3" B&B | |
| KCO | - | KENTUCKY COFFEE | GYMNOCLADUS DIOICUS | 2.5"-3" B&B | |
| MAL | - | CRABAPPLE | MALUS 'RED JEWEL' | 2.5"-3" B&B | |
| SYR | - | IVORY SILK LILAC | SYRINGA RETICULATA | 2.5" - 3" B&B | |

10' 0' 10' 20'
SCALE IN FEET

PLOT DATE: 5/17/2021
PLOT SCALE: 20.0000 ' / in.
FILE NAME: pw:\\CIVIL-PW-INT.civiltech.local:Civiltech Projects\Documents\Projects\3153\CAD\Sheets\Roadway\Contract 1\sht-lcp-007.dgn

| | | | | |
|---|---|---|---|---|
| DESIGN: JDM | | | | |
| DRAWN: JDM | | | | |
| CHECKED: PJH | | | | |
| APPROVED: | NO. | BY | DATE | DESCRIPTION |
| DATE: 01/22/2021 | REVISIONS | | | |

CDOT CHICAGO DEPARTMENT OF TRANSPORTATION

C*NECT

LANDSCAPING PLAN
PROPOSED PLANTING
S. STONY ISLAND AVE.

JACKSON PARK MOBILITY IMPROVEMENTS

STA. 226+65 TO STA. 229+66

| | | |
|---|---|---|
| CONTRACT NO. - | TOTAL SHEETS | SHEET NO. |
| PROJECT NO. B-7-203 | 1434 | 644 |
| SCALE: 1"=10' | DRAWING NO. LS-41 | |

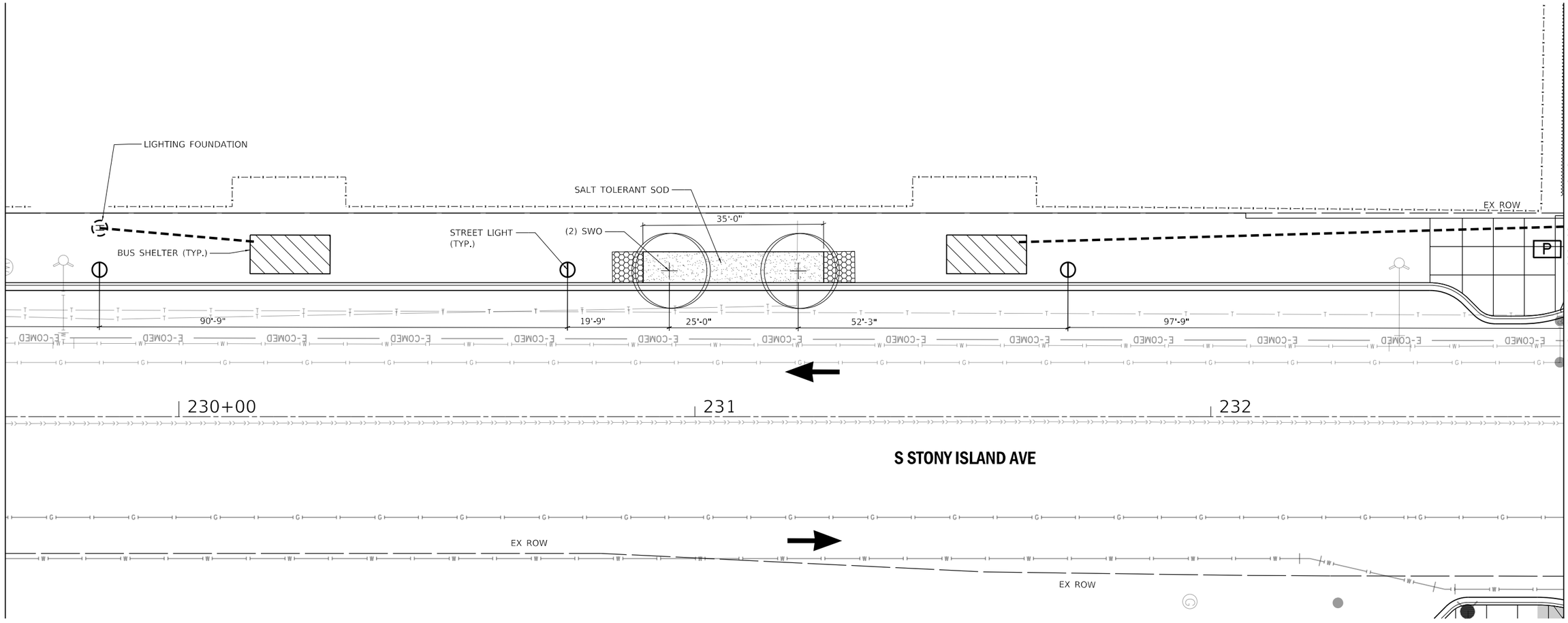


## LEGEND

SHADE TREE

ORNAMENTAL TREE

TREE GRATE

SALT TOLERANT SOD

STRUCTURAL SOIL

STREET LIGHT

EXISTING TREE

**LS-42 PLANT SCHEDULE**

**MEDIAN TREES**

| CODE | QTY | BOTANIC NAME | COMMON NAME | SIZE | COMMENTS |
|---|---|---|---|---|---|
| SWO | - | SWAMP WHITE OAK | QUERCUS BICOLOR | 2.5"-3" B&B | |
| ULM | - | NEW HORIZON ELM | ULMUS 'NEW HORIZON' | 2.5"-3" B&B | |
| COC | - | HACKBERRY | CELTIS OCCIDENTALIS | 2.5"-3" B&B | |
| KCO | - | KENTUCKY COFFEE | GYMNOCLADUS DIOICUS | 2.5"-3" B&B | |
| MAL | - | CRABAPPLE | MALUS 'RED JEWEL' | 2.5"-3" B&B | |

**NEW PARKWAY AND TREE PIT TREES**

| CODE | QTY | BOTANIC NAME | COMMON NAME | SIZE | COMMENTS |
|---|---|---|---|---|---|
| SWO | 2 | SWAMP WHITE OAK | QUERCUS BICOLOR | 2.5"-3" B&B | |
| SLH | - | SKYLINE HONEYLOCUST | GLEDITSIA TRIACANTHOS 'SKYLINE' | 2.5"-3" B&B | |
| ULM | - | NEW HORIZON ELM | ULMUS 'NEW HORIZON' | 2.5"-3" B&B | |
| COC | - | HACKBERRY | CELTIS OCCIDENTALIS | 2.5"-3" B&B | |
| KCO | - | KENTUCKY COFFEE | GYMNOCLADUS DIOICUS | 2.5"-3" B&B | |
| MAL | - | CRABAPPLE | MALUS 'RED JEWEL' | 2.5"-3" B&B | |

## LOCATION KEY




10' 0' 10' 20'

SCALE IN FEET

| | | | | | |
|---|---|---|---|---|---|
| DESIGN: JDM | | | | | |
| DRAWN: JDM | | | | | |
| CHECKED: PJH | | | | | |
| APPROVED: | NO. | BY | DATE | DESCRIPTION | |
| DATE: 01/22/2021 | REVISIONS | | | | |

CDOT CHICAGO DEPARTMENT OF TRANSPORTATION

C*NECT

LANDSCAPING PLAN
PROPOSED PLANTING
S. STONY ISLAND AVE.

JACKSON PARK MOBILITY IMPROVEMENTS

STA. 229+66 TO STA. 232+68

| | | |
|---|---|---|
| CONTRACT NO. - | TOTAL SHEETS 1434 | SHEET NO. 645 |
| PROJECT NO. B-7-203 | DRAWING NO. LS-42 | |
| SCALE: 1"=10' | | |

PLOT DATE: 5/17/2021
PLOT SCALE: 20.0000 ' / in.
FILE NAME: pw:\CIVIL-PW-JNT.cdwltech.local\CivilTech Projects\Documents\Projects\3153\CAD\Sheets\Roadway\Contract 1\sht-ls-008.dgn

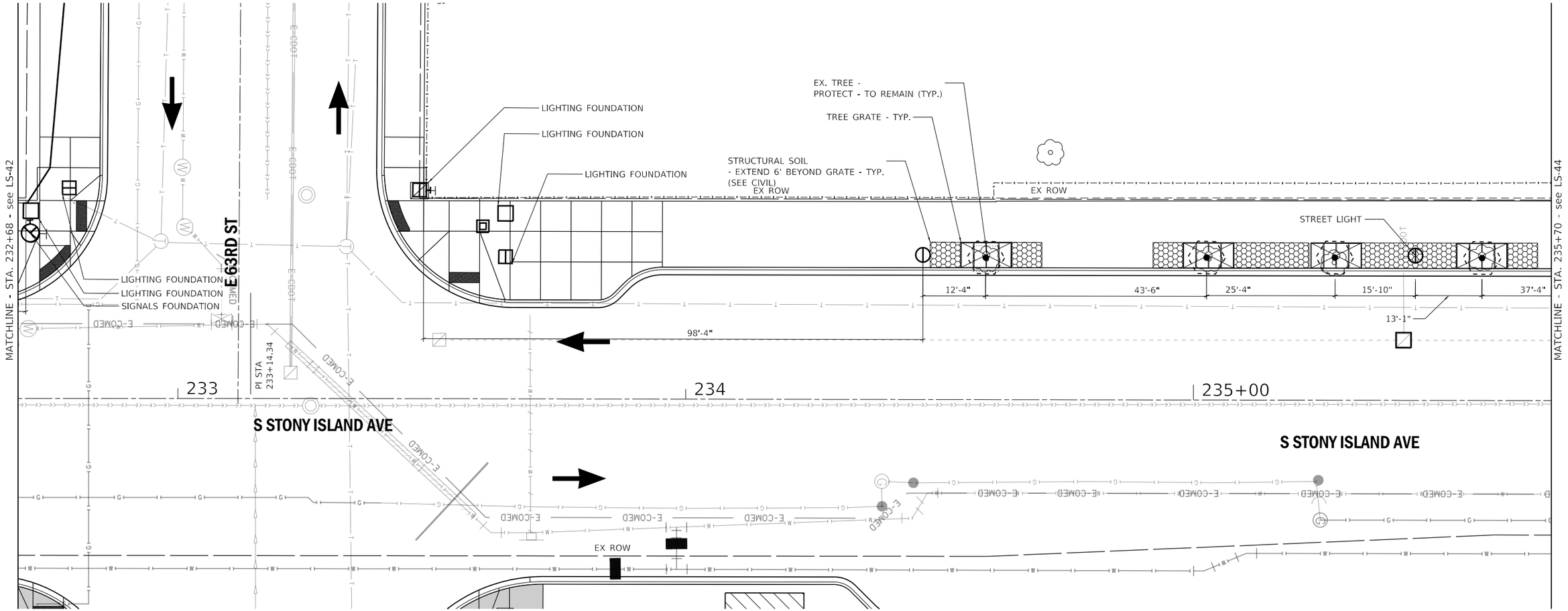


## LEGEND

- SHADE TREE
- ORNAMENTAL TREE
- TREE GRATE
- SALT TOLERANT SOD
- STRUCTURAL SOIL
- SITE LIGHT
- EXISTING TREE

## LOCATION KEY

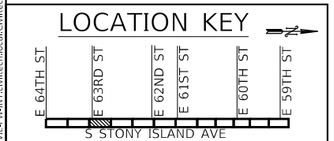


**LS-43 PLANT SCHEDULE**

**TREES**

**MEDIAN TREES**

| CODE | QTY | BOTANIC NAME | COMMON NAME | SIZE | COMMENTS |
|---|---|---|---|---|---|
| SWO | - | SWAMP WHITE OAK | QUERCUS BICOLOR | 2.5"-3" B&B | |
| ULM | - | NEW HORIZON ELM | ULMUS 'NEW HORIZON' | 2.5"-3" B&B | |
| COC | - | HACKBERRY | CELTIS OCCIDENTALIS | 2.5"-3" B&B | |
| KCO | - | KENTUCKY COFFEE | GYMNOCLADUS DIOICUS | 2.5"-3" B&B | |
| MAL | - | CRABAPPLE | MALUS 'RED JEWEL' | 2.5"-3" B&B | |

**NEW PARKWAY AND TREE PIT TREES**

| CODE | QTY | BOTANIC NAME | COMMON NAME | SIZE | COMMENTS |
|---|---|---|---|---|---|
| SWO | - | SWAMP WHITE OAK | QUERCUS BICOLOR | 2.5"-3" B&B | |
| SLH | - | SKYLINE HONEYLOCUST | GLEDITSIA TRIACANTHOS 'SKYLINE' | 2.5"-3" B&B | |
| ULM | - | NEW HORIZON ELM | ULMUS 'NEW HORIZON' | 2.5"-3" B&B | |
| COC | - | HACKBERRY | CELTIS OCCIDENTALIS | 2.5"-3" B&B | |
| KCO | - | KENTUCKY COFFEE | GYMNOCLADUS DIOICUS | 2.5"-3" B&B | |
| MAL | - | CRABAPPLE | MALUS 'RED JEWEL' | 2.5"-3" B&B | |

10' 0' 10' 20'
SCALE IN FEET

PLOT DATE: 5/17/2021
PLOT SCALE: 20.0000 ' / in.
FILE NAME: pw:\\CIVIL-PW-INT.civiltech.local:Civiltech Projects\Documents\Projects\3153\CAD\Sheets\Roadway\Contract 1\sht-lcp-009.dgn

| | | | | |
|---|---|---|---|---|
| DESIGN: JDM | | | | |
| DRAWN: JDM | | | | |
| CHECKED: PJH | | | | |
| APPROVED: | NO. | BY | DATE | DESCRIPTION |
| DATE: 01/22/2021 | REVISIONS | | | |

CDOT CHICAGO DEPARTMENT OF TRANSPORTATION

C*NECT

LANDSCAPING PLAN
PROPOSED PLANTING
S. STONY ISLAND AVE.

JACKSON PARK MOBILITY IMPROVEMENTS

STA. 232+68 TO STA. 235+70

| | | |
|---|---|---|
| CONTRACT NO. - | TOTAL SHEETS 1434 | SHEET NO. 646L5 |
| PROJECT NO. B-7-203 | DRAWING NO. LS-43 | |
| SCALE: 1"=10' | | |

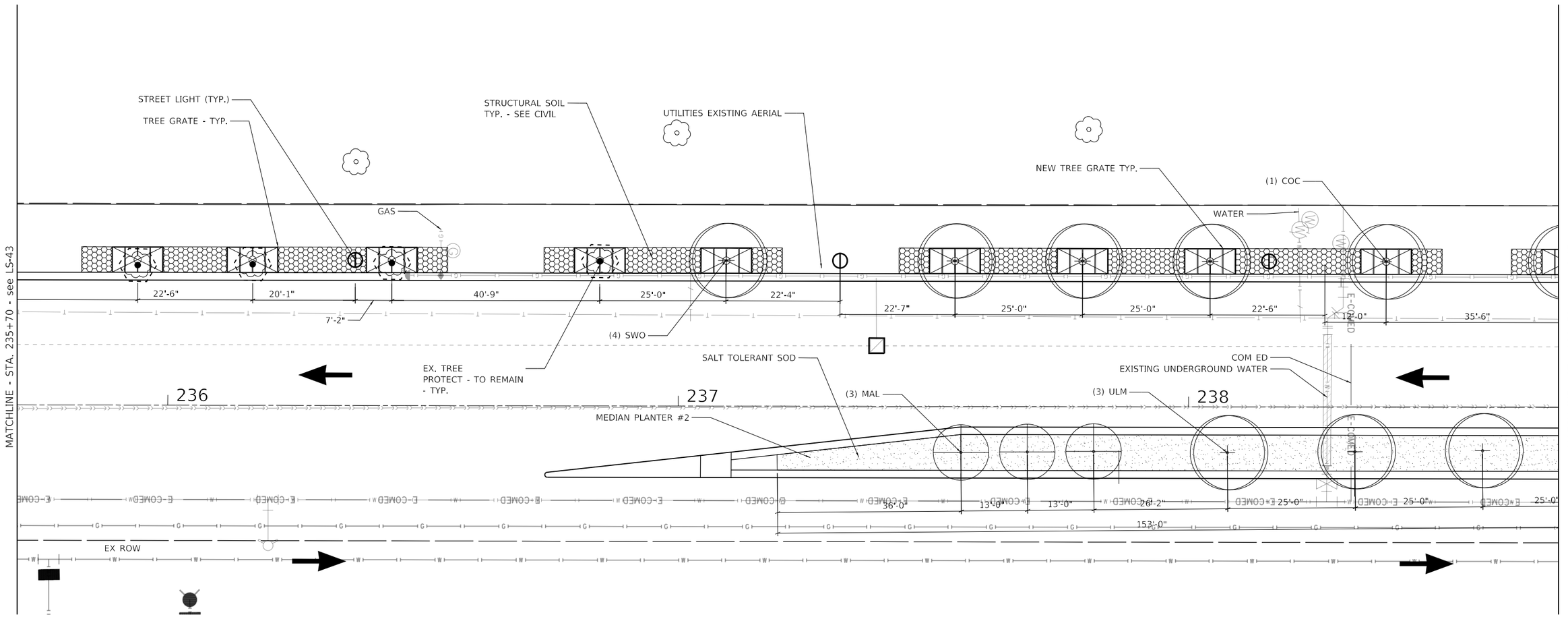


## LEGEND

- SHADE TREE
- ORNAMENTAL TREE
- TREE GRATE
- SALT TOLERANT SOD
- STRUCTURAL SOIL
- STREET LIGHT
- EXISTING TREE

## LOCATION KEY

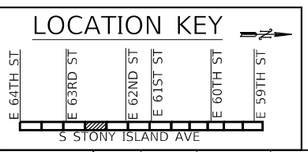


## MEDIAN PLANTER #2

1801 SF
153 LF

**LS-44 PLANT SCHEDULE**

**MEDIAN TREES**

| CODE | QTY | BOTANIC NAME | COMMON NAME | SIZE | COMMENTS |
|---|---|---|---|---|---|
| SWO | - | SWAMP WHITE OAK | QUERCUS BICOLOR | 2.5"-3" B&B | |
| ULM | 3 | NEW HORIZON ELM | ULMUS 'NEW HORIZON' | 2.5"-3" B&B | |
| COC | - | HACKBERRY | CELTIS OCCIDENTALIS | 2.5"-3" B&B | |
| KCO | - | KENTUCKY COFFEE | GYMNOCLADUS DIOICUS | 2.5"-3" B&B | |
| MAL | 3 | CRABAPPLE | MALUS 'RED JEWEL' | 2.5"-3" B&B | |
| SYR | - | IVORY SILK LILAC | SYRINGA RETICULATA | 2.5" - 3" B&B | |

**NEW PARKWAY AND TREE PIT TREES**

| CODE | QTY | BOTANIC NAME | COMMON NAME | SIZE | COMMENTS |
|---|---|---|---|---|---|
| SWO | 4 | SWAMP WHITE OAK | QUERCUS BICOLOR | 2.5"-3" B&B | |
| SLH | - | SKYLINE HONEYLOCUST | GLEDITSIA TRIACANTHOS 'SKYLINE' | 2.5"-3" B&B | |
| ULM | - | NEW HORIZON ELM | ULMUS 'NEW HORIZON' | 2.5"-3" B&B | |
| COC | 1 | HACKBERRY | CELTIS OCCIDENTALIS | 2.5"-3" B&B | |
| KCO | - | KENTUCKY COFFEE | GYMNOCLADUS DIOICUS | 2.5"-3" B&B | |
| MAL | - | CRABAPPLE | MALUS 'RED JEWEL' | 2.5"-3" B&B | |
| SYR | - | IVORY SILK LILAC | SYRINGA RETICULATA | 2.5" - 3" B&B | |

10' 0' 10' 20'
SCALE IN FEET

PLOT DATE: 5/17/2021
PLOT SCALE: 20.0000 ' / in.
FILE NAME: pw:\\CDOT-PW-INT.cdottech.local\Cdottech Projects\Documents\Projects\3153\CADD\Sheets\Roadway\Contract 1\sht-ls-010.dgn

| | | | | |
|---|---|---|---|---|
| DESIGN: JDM | | | | |
| DRAWN: JDM | | | | |
| CHECKED: PJH | | | | |
| APPROVED: | NO. | BY | DATE | DESCRIPTION |
| DATE: 01/22/2021 | REVISIONS | | | |

CDOT CHICAGO DEPARTMENT OF TRANSPORTATION

C*NECT

LANDSCAPING PLAN
PROPOSED PLANTING
S. STONY ISLAND AVE.

JACKSON PARK MOBILITY IMPROVEMENTS

STA. 235+70 TO STA. 238+73

| | | |
|---|---|---|
| CONTRACT NO. - | TOTAL SHEETS | SHEET NO. |
| PROJECT NO. B-7-203 | 1434 | 647 |
| SCALE: 1"=10' | DRAWING NO. LS-44 | |

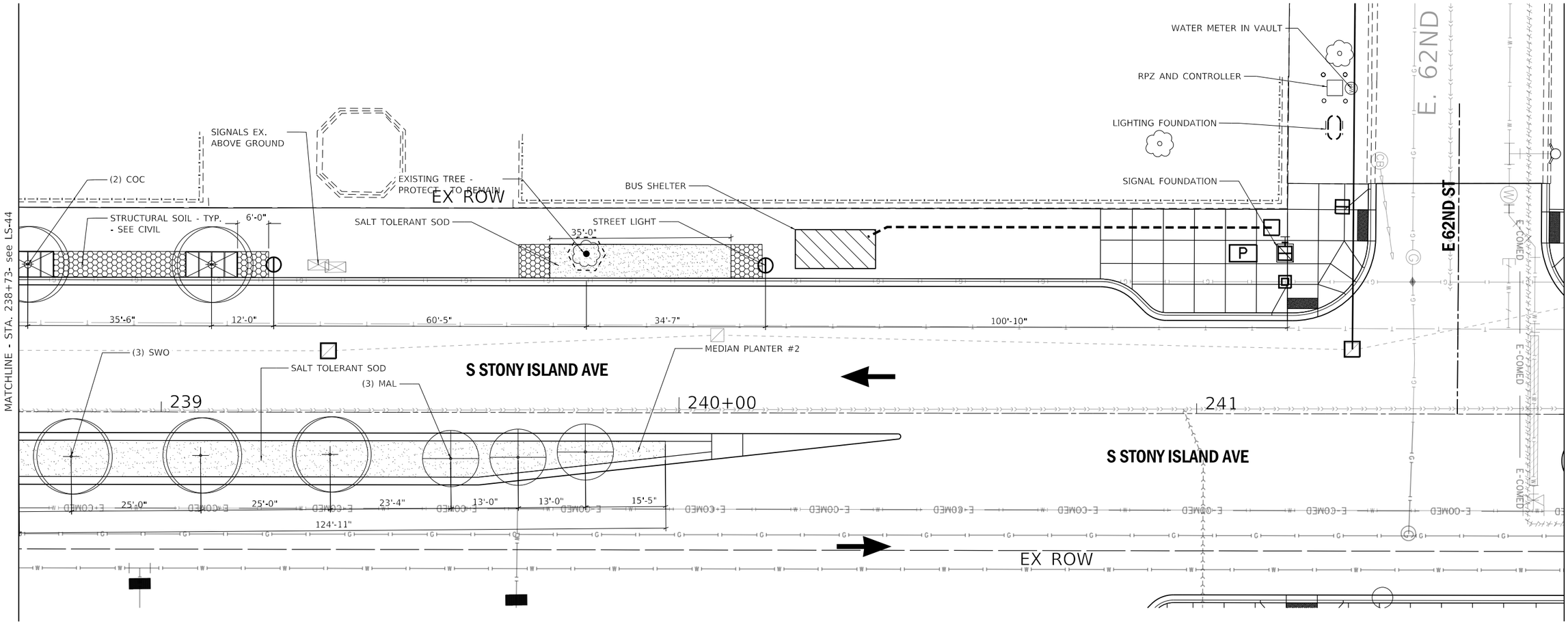


## LEGEND

- SHADE TREE
- SALT TOLERANT SOD
- ORNAMENTAL TREE
- STRUCTURAL SOIL
- TREE IN GRATE
- STREET LIGHT
- EXISTING TREE

## LOCATION KEY

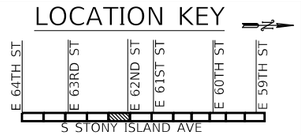


| LS-45 PLANT SCHEDULE | | | | | |
|---|---|---|---|---|---|
| **MEDIAN TREES** | | | | | |
| **CODE** | **QTY** | **BOTANIC NAME** | **COMMON NAME** | **SIZE** | **COMMENTS** |
| SWO | 3 | SWAMP WHITE OAK | QUERCUS BICOLOR | 2.5"-3" B&B | |
| ULM | - | NEW HORIZON ELM | ULMUS 'NEW HORIZON' | 2.5"-3" B&B | |
| COC | - | HACKBERRY | CELTIS OCCIDENTALIS | 2.5"-3" B&B | |
| KCO | - | KENTUCKY COFFEE | GYMNOCLADUS DIOICUS | 2.5"-3" B&B | |
| MAL | 3 | CRABAPPLE | MALUS 'RED JEWEL' | 2.5"-3" B&B | |
| SYR | - | IVORY SILK LILAC | SYRINGA RETICULATA | 2.5" - 3" B&B | |

| NEW PARKWAY AND TREE PIT TREES | | | | | |
|---|---|---|---|---|---|
| **CODE** | **QTY** | **BOTANIC NAME** | **COMMON NAME** | **SIZE** | **COMMENTS** |
| SWO | - | SWAMP WHITE OAK | QUERCUS BICOLOR | 2.5"-3" B&B | |
| SLH | - | SKYLINE HONEYLOCUST | GLEDITSIA TRIACANTHOS 'SKYLINE' | 2.5"-3" B&B | |
| ULM | - | NEW HORIZON ELM | ULMUS 'NEW HORIZON' | 2.5"-3" B&B | |
| COC | 2 | HACKBERRY | CELTIS OCCIDENTALIS | 2.5"-3" B&B | |
| KCO | - | KENTUCKY COFFEE | GYMNOCLADUS DIOICUS | 2.5"-3" B&B | |
| MAL | - | CRABAPPLE | MALUS 'RED JEWEL' | 2.5"-3" B&B | |
| SYR | - | IVORY SILK LILAC | SYRINGA RETICULATA | 2.5" - 3" B&B | |

10' 0' 10' 20'
SCALE IN FEET

PLOT DATE: 5/17/2021
PLOT SCALE: 20 ' / in.
FILE NAME: pw:\\CIVIL-PW-INT.civiltech.local:Civiltech Projects\Documents\Projects\3153\CAD\Sheets\Roadway\Contract 1\sht-kcp-011.dgn

| | | | | |
|---|---|---|---|---|
| DESIGN: JDM | | | | |
| DRAWN: JDM | | | | |
| CHECKED: PJH | | | | |
| APPROVED: | NO. | BY | DATE | DESCRIPTION |
| DATE: 01/22/2021 | REVISIONS | | | |

CDOT CHICAGO DEPARTMENT OF TRANSPORTATION

C*NECT

LANDSCAPING PLAN
PROPOSED PLANTING
S. STONY ISLAND AVE.

JACKSON PARK MOBILITY IMPROVEMENTS

STA. 238+73 TO STA. 241+71

| | | |
|---|---|---|
| CONTRACT NO. - | TOTAL SHEETS 1434 | SHEET NO. 648 |
| PROJECT NO. B-7-203 | DRAWING NO. LS-45 | |
| SCALE: 1"=10' | | |

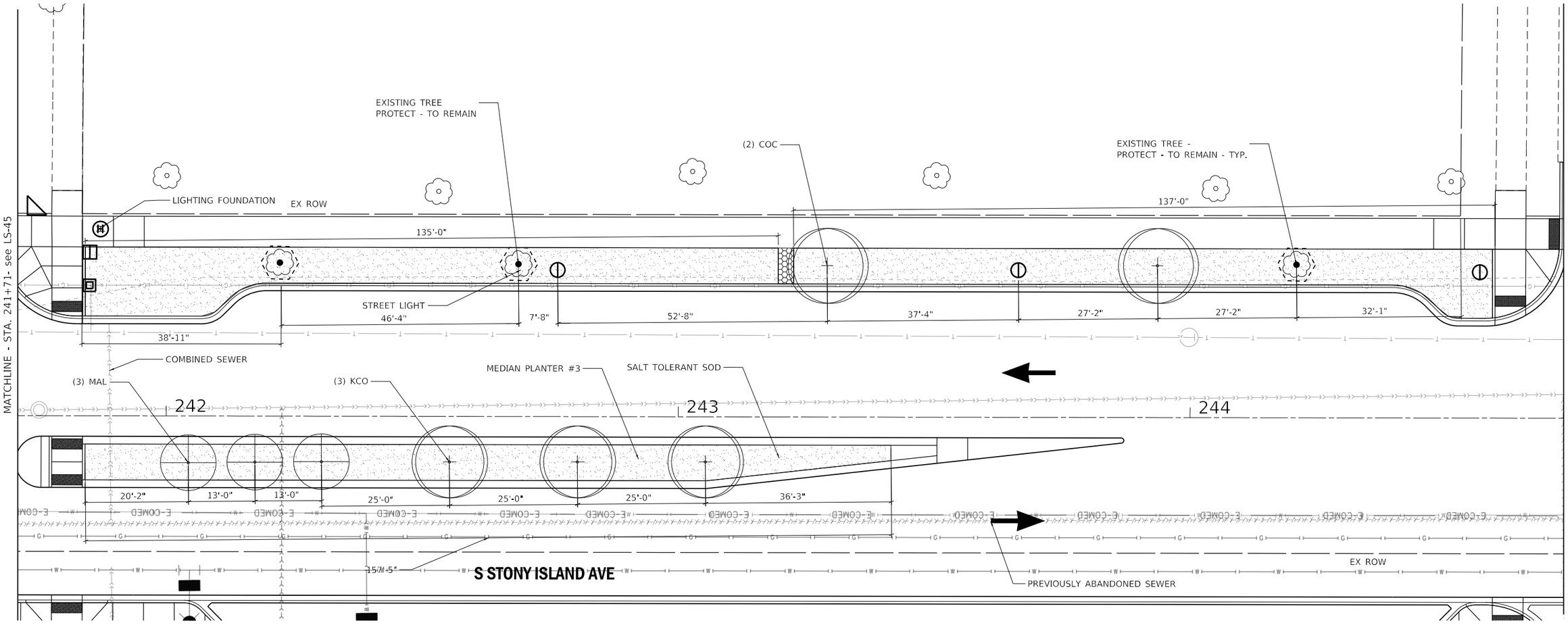


## LEGEND

- SHADE TREE
- ORNAMENTAL TREE
- TREE IN GRATE
- SALT TOLERANT SOD
- STRUCTURAL SOIL
- STREET LIGHT
- EXISTING TREE

## MEDIAN PLANTER #3

1030 SF
158 LF

**LS-46 PLANT SCHEDULE**

**MEDIAN TREES**

| CODE | QTY | BOTANIC NAME | COMMON NAME | SIZE | COMMENTS |
|---|---|---|---|---|---|
| SWO | - | SWAMP WHITE OAK | QUERCUS BICOLOR | 2.5"-3" B&B | |
| ULM | - | NEW HORIZON ELM | ULMUS 'NEW HORIZON' | 2.5"-3" B&B | |
| COC | - | HACKBERRY | CELTIS OCCIDENTALIS | 2.5"-3" B&B | |
| KCO | 3 | KENTUCKY COFFEE | GYMNOCLADUS DIOICUS | 2.5"-3" B&B | |
| MAL | 3 | CRABAPPLE | MALUS 'RED JEWEL' | 2.5"-3" B&B | |
| SYR | - | IVORY SILK LILAC | SYRINGA RETICULATA | 2.5" - 3" B&B | |

**NEW PARKWAY AND TREE PIT TREES**

| CODE | QTY | BOTANIC NAME | COMMON NAME | SIZE | COMMENTS |
|---|---|---|---|---|---|
| SWO | - | SWAMP WHITE OAK | QUERCUS BICOLOR | 2.5"-3" B&B | |
| SLH | - | SKYLINE HONEYLOCUST | GLEDITSIA TRIACANTHOS 'SKYLINE' | 2.5"-3" B&B | |
| ULM | - | NEW HORIZON ELM | ULMUS 'NEW HORIZON' | 2.5"-3" B&B | |
| COC | 2 | HACKBERRY | CELTIS OCCIDENTALIS | 2.5"-3" B&B | |
| KCO | - | KENTUCKY COFFEE | GYMNOCLADUS DIOICUS | 2.5"-3" B&B | |
| MAL | - | CRABAPPLE | MALUS 'RED JEWEL' | 2.5"-3" B&B | |
| SYR | - | IVORY SILK LILAC | SYRINGA RETICULATA | 2.5" - 3" B&B | |

## LOCATION KEY

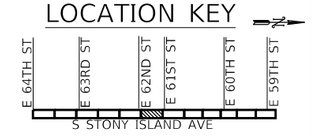


10' 0' 10' 20'
SCALE IN FEET

| | | | | |
|---|---|---|---|---|
| DESIGN: JDM | | | | |
| DRAWN: JDM | | | | |
| CHECKED: PJH | | | | |
| APPROVED: | NO. | BY | DATE | DESCRIPTION |
| DATE: 03/29/2021 | REVISIONS | | | |

CDOT CHICAGO DEPARTMENT OF TRANSPORTATION

C*NECT

LANDSCAPING PLAN
PROPOSED PLANTING
S. STONY ISLAND AVE.

JACKSON PARK MOBILITY IMPROVEMENTS

STA. 241+71 TO STA. 244+73

| | | |
|---|---|---|
| CONTRACT NO. - | TOTAL SHEETS 1434 | SHEET NO. 649 |
| PROJECT NO. B-7-203 | DRAWING NO. LS-46 | |
| SCALE: 1"=10' | | |

PLOT DATE: 5/17/2021
PLOT SCALE: 20.0000 ' / in.
FILE NAME: pw:\\CIVIL-PW-INT.civiltech.local:Civiltech Projects\Documents\Projects\3153\CAD\Sheets\Roadway\Contract 1\sht-lcp-012.dgn

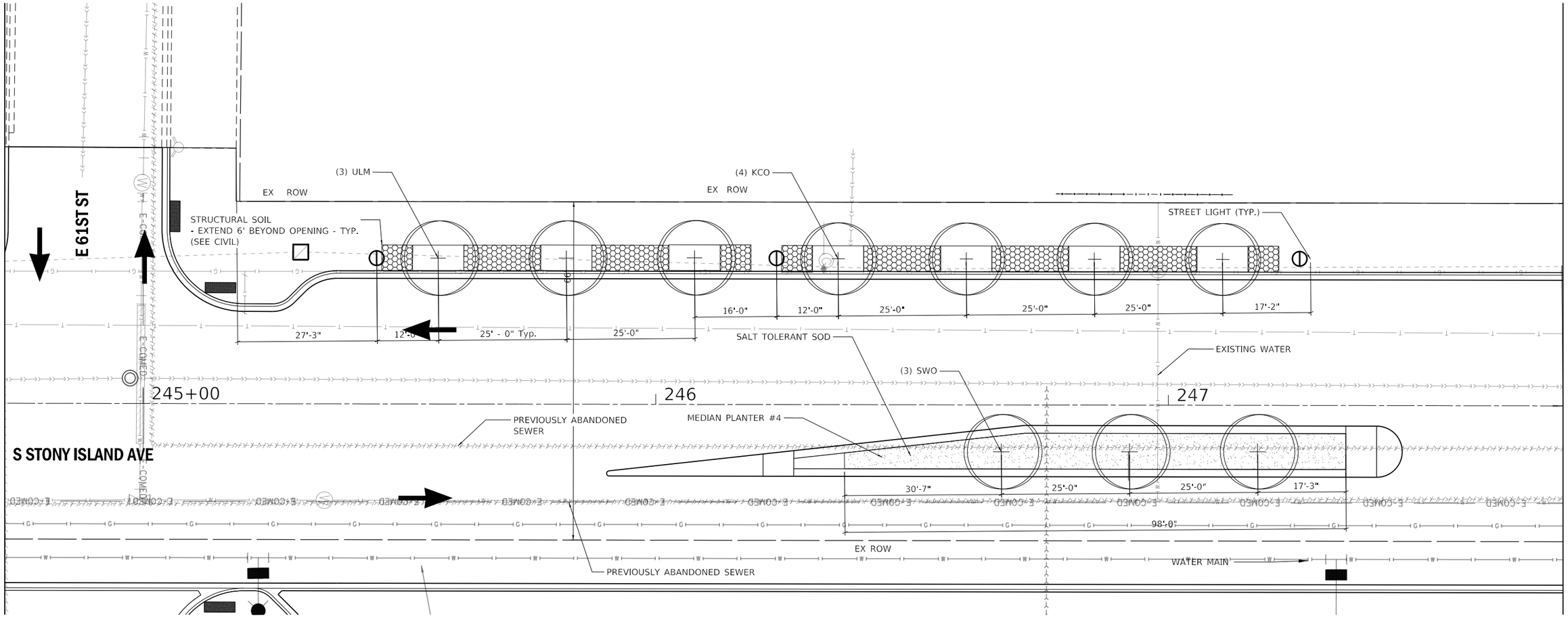


## LEGEND

- SHADE TREE
- ORNAMENTAL TREE
- TREE IN GRATE
- SALT TOLERANT SOD
- STRUCTURAL SOIL
- STREET LIGHT
- EXISTING TREE

## LOCATION KEY




## MEDIAN PLANTER #4

572 SF
98 LF

**LS-47 PLANT SCHEDULE**

**MEDIAN TREES**

| CODE | QTY | BOTANIC NAME | COMMON NAME | SIZE | COMMENTS |
|---|---|---|---|---|---|
| SWO | 3 | SWAMP WHITE OAK | QUERCUS BICOLOR | 2.5"-3" B&B | |
| ULM | - | NEW HORIZON ELM | ULMUS 'NEW HORIZON' | 2.5"-3" B&B | |
| COC | - | HACKBERRY | CELTIS OCCIDENTALIS | 2.5"-3" B&B | |
| KCO | - | KENTUCKY COFFEE | GYMNOCLADUS DIOICUS | 2.5"-3" B&B | |
| MAL | - | CRABAPPLE | MALUS 'RED JEWEL' | 2.5"-3" B&B | |
| SYR | - | IVORY SILK LILAC | SYRINGA RETICULATA | 2.5" - 3" B&B | |

**NEW PARKWAY AND TREE PIT TREES**

| CODE | QTY | BOTANIC NAME | COMMON NAME | SIZE | COMMENTS |
|---|---|---|---|---|---|
| SWO | - | SWAMP WHITE OAK | QUERCUS BICOLOR | 2.5"-3" B&B | |
| SLH | - | SKYLINE HONEYLOCUST | GLEDITSIA TRIACANTHOS 'SKYLINE' | 2.5"-3" B&B | |
| ULM | 3 | NEW HORIZON ELM | ULMUS 'NEW HORIZON' | 2.5"-3" B&B | |
| COC | - | HACKBERRY | CELTIS OCCIDENTALIS | 2.5"-3" B&B | |
| KCO | 4 | KENTUCKY COFFEE | GYMNOCLADUS DIOICUS | 2.5"-3" B&B | |
| MAL | - | CRABAPPLE | MALUS 'RED JEWEL' | 2.5"-3" B&B | |
| SYR | - | IVORY SILK LILAC | SYRINGA RETICULATA | 2.5" - 3" B&B | |

10' 0' 10' 20'
SCALE IN FEET

PLOT DATE: 5/17/2021
PLOT SCALE: 20.0000 ' / in.
FILE NAME: pw:\\CWI-PW-INT-civiltech.bentley.com:CiviltechProjects\Documents\Projects\3153\CADD\Sheets\Roadway\Contract 1\ls1-ls-013.dgn

| | | | | | |
|---|---|---|---|---|---|
| DESIGN: JDM | | | | | |
| DRAWN: JDM | | | | | |
| CHECKED: PJH | | | | | |
| APPROVED: | NO. | BY | DATE | DESCRIPTION | |
| DATE: 03/29/2021 | REVISIONS | | | | |

CDOT CHICAGO DEPARTMENT OF TRANSPORTATION

C*NECT

LANDSCAPING PLAN
PROPOSED PLANTING
S. STONY ISLAND AVE.

JACKSON PARK MOBILITY IMPROVEMENTS

STA. 244+73 TO STA. 247+77

| | | |
|---|---|---|
| CONTRACT NO. - | TOTAL SHEETS 1434 | SHEET NO. 650 |
| PROJECT NO. B-7-203 | DRAWING NO. LS-47 | |
| SCALE: 1"=10' | | |

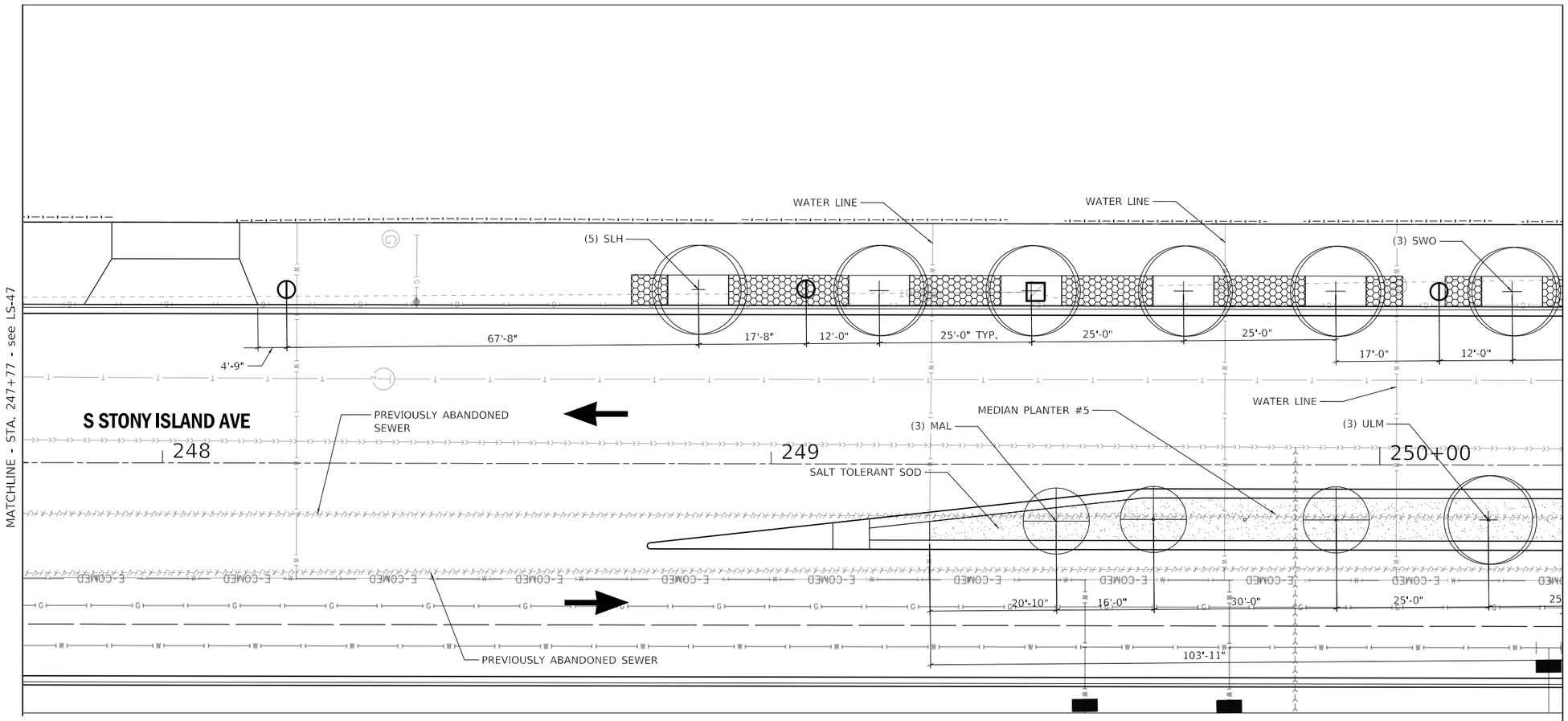


## LEGEND

- SHADE TREE
- ORNAMENTAL TREE
- TREE IN GRATE
- SALT TOLERANT SOD
- STRUCTURAL SOIL
- STREET LIGHT
- EXISTING TREE

## LOCATION KEY




## MEDIAN PLANTER #5

3210 SF
476 LF

**LS-48 PLANT SCHEDULE**

**MEDIAN TREES**

| CODE | QTY | BOTANIC NAME | COMMON NAME | SIZE | COMMENTS |
|---|---|---|---|---|---|
| SWO | - | SWAMP WHITE OAK | QUERCUS BICOLOR | 2.5"-3" B&B | |
| ULM | 1 | NEW HORIZON ELM | ULMUS 'NEW HORIZON' | 2.5"-3" B&B | |
| COC | - | HACKBERRY | CELTIS OCCIDENTALIS | 2.5"-3" B&B | |
| KCO | - | KENTUCKY COFFEE | GYMNOCLADUS DIOICUS | 2.5"-3" B&B | |
| MAL | 3 | CRABAPPLE | MALUS 'RED JEWEL' | 2.5"-3" B&B | |
| SYR | - | IVORY SILK LILAC | SYRINGA RETICULATA | 2.5" - 3" B&B | |

**NEW PARKWAY AND TREE PIT TREES**

| CODE | QTY | BOTANIC NAME | COMMON NAME | SIZE | COMMENTS |
|---|---|---|---|---|---|
| SWO | 1 | SWAMP WHITE OAK | QUERCUS BICOLOR | 2.5"-3" B&B | |
| SLH | 5 | SKYLINE HONEYLOCUST | GLEDITSIA TRIACANTHOS 'SKYLINE' | 2.5"-3" B&B | |
| ULM | - | NEW HORIZON ELM | ULMUS 'NEW HORIZON' | 2.5"-3" B&B | |
| COC | - | HACKBERRY | CELTIS OCCIDENTALIS | 2.5"-3" B&B | |
| KCO | - | KENTUCKY COFFEE | GYMNOCLADUS DIOICUS | 2.5"-3" B&B | |
| MAL | - | CRABAPPLE | MALUS 'RED JEWEL' | 2.5"-3" B&B | |
| SYR | - | IVORY SILK LILAC | SYRINGA RETICULATA | 2.5" - 3" B&B | |

10' 0' 10' 20'
SCALE IN FEET

PLOT DATE: 5/17/2021
PLOT SCALE: 20.0000 ' / in.
FILE NAME: pw:\\CITVL-PW-INT.cdot.tech.local:CivilTech Projects\Documents\Projects\3133\CADDSheets\Roadway\Contract 11sht-Ls-014.dgn

| | | | | |
|---|---|---|---|---|
| DESIGN: JDM | | | | |
| DRAWN: JDM | | | | |
| CHECKED: PJH | | | | |
| APPROVED: | NO. | BY | DATE | DESCRIPTION |
| DATE: 01/22/2021 | REVISIONS | | | |

CDOT CHICAGO DEPARTMENT OF TRANSPORTATION

CONNECT

LANDSCAPING PLAN
PROPOSED PLANTING
S. STONY ISLAND AVE.

JACKSON PARK MOBILITY IMPROVEMENTS

STA. 247+77 TO STA. 250+30

| | | |
|---|---|---|
| CONTRACT NO. - | TOTAL SHEETS 1434 | SHEET NO. 651 |
| PROJECT NO. B-7-203 | DRAWING NO. LS-48 | |
| SCALE: 1"=10' | | |

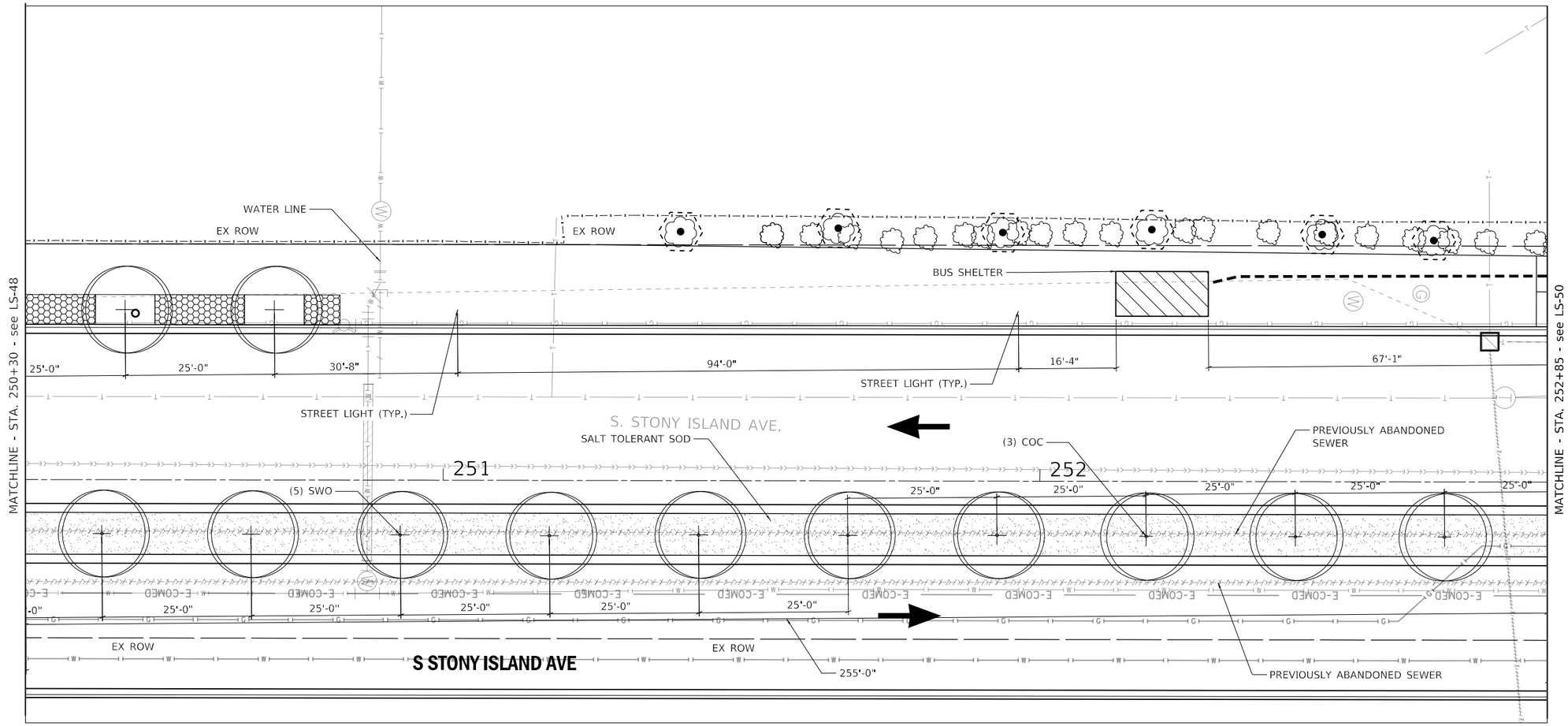


## LEGEND

- SHADE TREE
- ORNAMENTAL TREE
- TREE IN GRATE
- SALT TOLERANT SOD
- STRUCTURAL SOIL
- STREET LIGHT
- EXISTING TREE

**LS-49 PLANT SCHEDULE**

**MEDIAN TREES**

| CODE | QTY | BOTANIC NAME | COMMON NAME | SIZE | COMMENTS |
|---|---|---|---|---|---|
| SWO | 5 | SWAMP WHITE OAK | QUERCUS BICOLOR | 2.5"-3" B&B | |
| ULM | 2 | NEW HORIZON ELM | ULMUS 'NEW HORIZON' | 2.5"-3" B&B | |
| COC | 3 | HACKBERRY | CELTIS OCCIDENTALIS | 2.5"-3" B&B | |
| KCO | - | KENTUCKY COFFEE | GYMNOCLADUS DIOICUS | 2.5"-3" B&B | |
| MAL | - | CRABAPPLE | MALUS 'RED JEWEL' | 2.5"-3" B&B | |
| SYR | - | IVORY SILK LILAC | SYRINGA RETICULATA | 2.5" - 3" B&B | |

**NEW PARKWAY AND TREE PIT TREES**

| CODE | QTY | BOTANIC NAME | COMMON NAME | SIZE | COMMENTS |
|---|---|---|---|---|---|
| SWO | 2 | SWAMP WHITE OAK | QUERCUS BICOLOR | 2.5"-3" B&B | |
| SLH | - | SKYLINE HONEYLOCUST | GLEDITSIA TRIACANTHOS 'SKYLINE' | 2.5"-3" B&B | |
| ULM | - | NEW HORIZON ELM | ULMUS 'NEW HORIZON' | 2.5"-3" B&B | |
| COC | - | HACKBERRY | CELTIS OCCIDENTALIS | 2.5"-3" B&B | |
| KCO | - | KENTUCKY COFFEE | GYMNOCLADUS DIOICUS | 2.5"-3" B&B | |
| MAL | - | CRABAPPLE | MALUS 'RED JEWEL' | 2.5"-3" B&B | |
| SYR | - | IVORY SILK LILAC | SYRINGA RETICULATA | 2.5" - 3" B&B | |

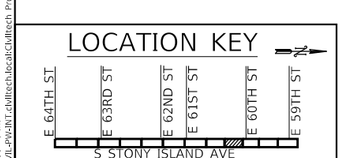


10' 0' 10' 20'
SCALE IN FEET

PLOT DATE: 5/17/2021
PLOT SCALE: 20.0000 ' / in.
FILE NAME: pw:\\CWI-PW-INT.civiltech.local:CivilTech Projects\Documents\Projects\3153\C4D\Sheets\Roadway\Contract 1\int-lcs-015.dgn

| | | | | | |
|---|---|---|---|---|---|
| DESIGN: JDM | | | | | |
| DRAWN: JDM | | | | | |
| CHECKED: PJH | | | | | |
| APPROVED: | NO. | BY | DATE | DESCRIPTION | |
| DATE: 01/22/2021 | REVISIONS | | | | |

CDOT CHICAGO DEPARTMENT OF TRANSPORTATION

C*NECT

LANDSCAPING PLAN
PROPOSED PLANTING
S. STONY ISLAND AVE.

JACKSON PARK MOBILITY IMPROVEMENTS

STA. 250+30 TO STA. 252+85

| | | | |
|---|---|---|---|
| CONTRACT NO. - | | TOTAL SHEETS 1434 | SHEET NO. 652 |
| PROJECT NO. B-7-203 | | DRAWING NO. LS-49 | |
| SCALE: 1"=10' | | | |

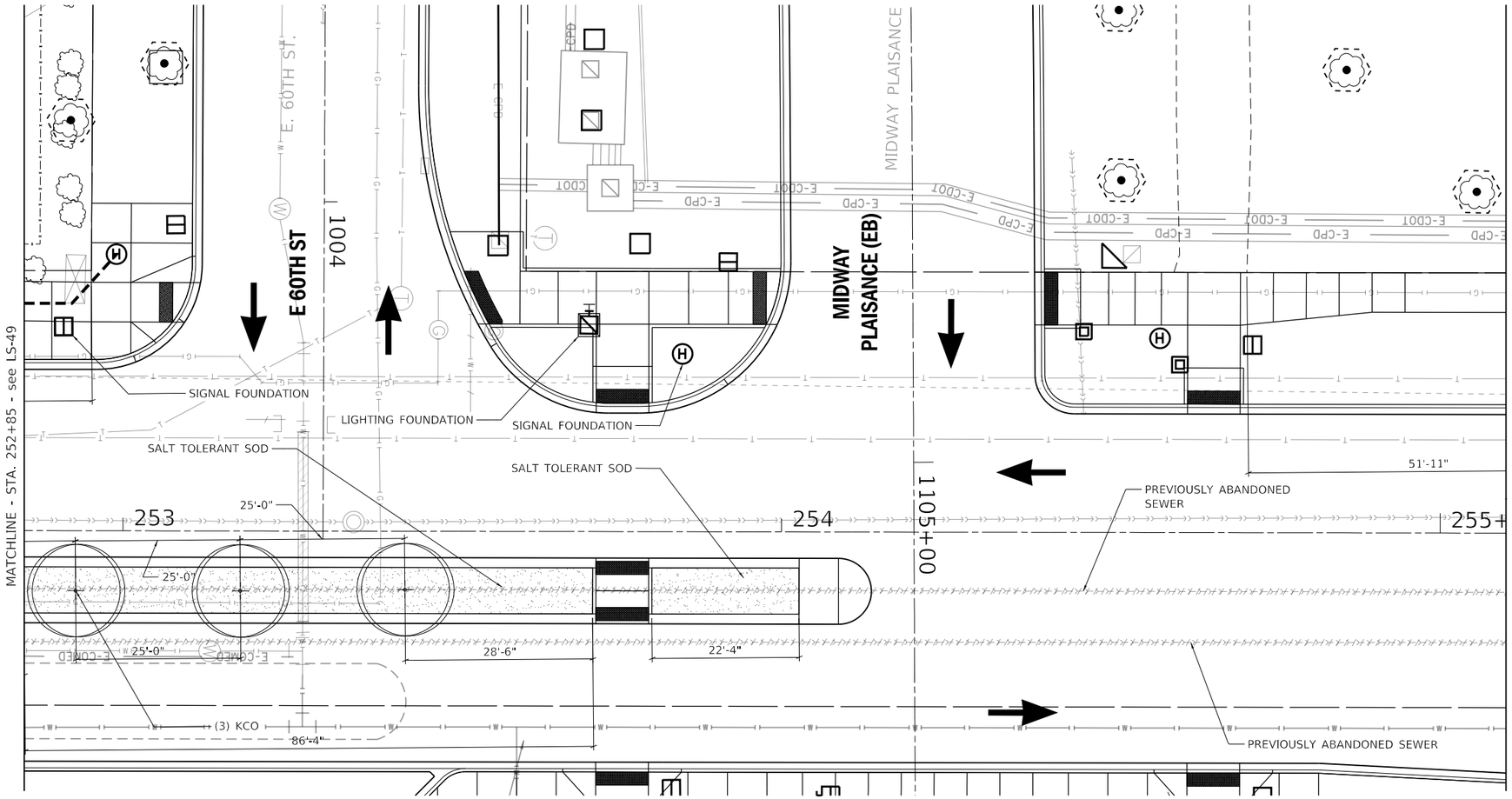


## LEGEND

- SHADE TREE
- ORNAMENTAL TREE
- TREE IN GRATE
- SALT TOLERANT SOD
- STRUCTURAL SOIL
- STREET LIGHT

**LS-50 PLANT SCHEDULE**

**MEDIAN TREES**

| CODE | QTY | BOTANIC NAME | COMMON NAME | SIZE | COMMENTS |
|---|---|---|---|---|---|
| SWO | - | SWAMP WHITE OAK | QUERCUS BICOLOR | 2.5"-3" B&B | |
| ULM | - | NEW HORIZON ELM | ULMUS 'NEW HORIZON' | 2.5"-3" B&B | |
| COC | - | HACKBERRY | CELTIS OCCIDENTALIS | 2.5"-3" B&B | |
| KCO | 3 | KENTUCKY COFFEE | GYMNOCLADUS DIOICUS | 2.5"-3" B&B | |
| MAL | - | CRABAPPLE | MALUS 'RED JEWEL' | 2.5"-3" B&B | |
| SYR | - | IVORY SILK LILAC | SYRINGA RETICULATA | 2.5" - 3" B&B | |

**NEW PARKWAY AND TREE PIT TREES**

| CODE | QTY | BOTANIC NAME | COMMON NAME | SIZE | COMMENTS |
|---|---|---|---|---|---|
| SWO | - | SWAMP WHITE OAK | QUERCUS BICOLOR | 2.5"-3" B&B | |
| SLH | - | SKYLINE HONEYLOCUST | GLEDITSIA TRIACANTHOS 'SKYLINE' | 2.5"-3" B&B | |
| ULM | - | NEW HORIZON ELM | ULMUS 'NEW HORIZON' | 2.5"-3" B&B | |
| COC | - | HACKBERRY | CELTIS OCCIDENTALIS | 2.5"-3" B&B | |
| KCO | - | KENTUCKY COFFEE | GYMNOCLADUS DIOICUS | 2.5"-3" B&B | |
| MAL | - | CRABAPPLE | MALUS 'RED JEWEL' | 2.5"-3" B&B | |
| SYR | - | IVORY SILK LILAC | SYRINGA RETICULATA | 2.5" - 3" B&B | |

## LOCATION KEY

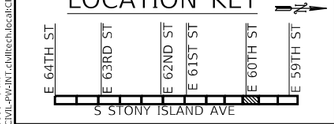


10' 0' 10' 20'
SCALE IN FEET

PLOT DATE: 5/17/2021
PLOT SCALE: 20.0000 ' / in.
FILE NAME: pw:\\CVIL-PW-INT.cdot.tech.local\Civiltech Projects\Documents\Projects\3153\CADs\Streets\Roadway\Contract 1\sht-lcs-016.dgn

| | | | | | |
|---|---|---|---|---|---|
| DESIGN: JDM | | | | | |
| DRAWN: JDM | | | | | |
| CHECKED: PJH | | | | | |
| APPROVED: | NO. | BY | DATE | DESCRIPTION | |
| DATE: 03/29/2021 | REVISIONS | | | | |

CDOT CHICAGO DEPARTMENT OF TRANSPORTATION

C*NECT

LANDSCAPING PLAN
PROPOSED PLANTING
S. STONY ISLAND AVE.

JACKSON PARK MOBILITY IMPROVEMENTS

STA. 252+85 TO STA. 255+10

| | |
|---|---|
| CONTRACT NO. - | TOTAL SHEETS 1434 / SHEET NO. 653 |
| PROJECT NO. B-7-203 | DRAWING NO. LS-50 |
| SCALE: 1"=10' | |

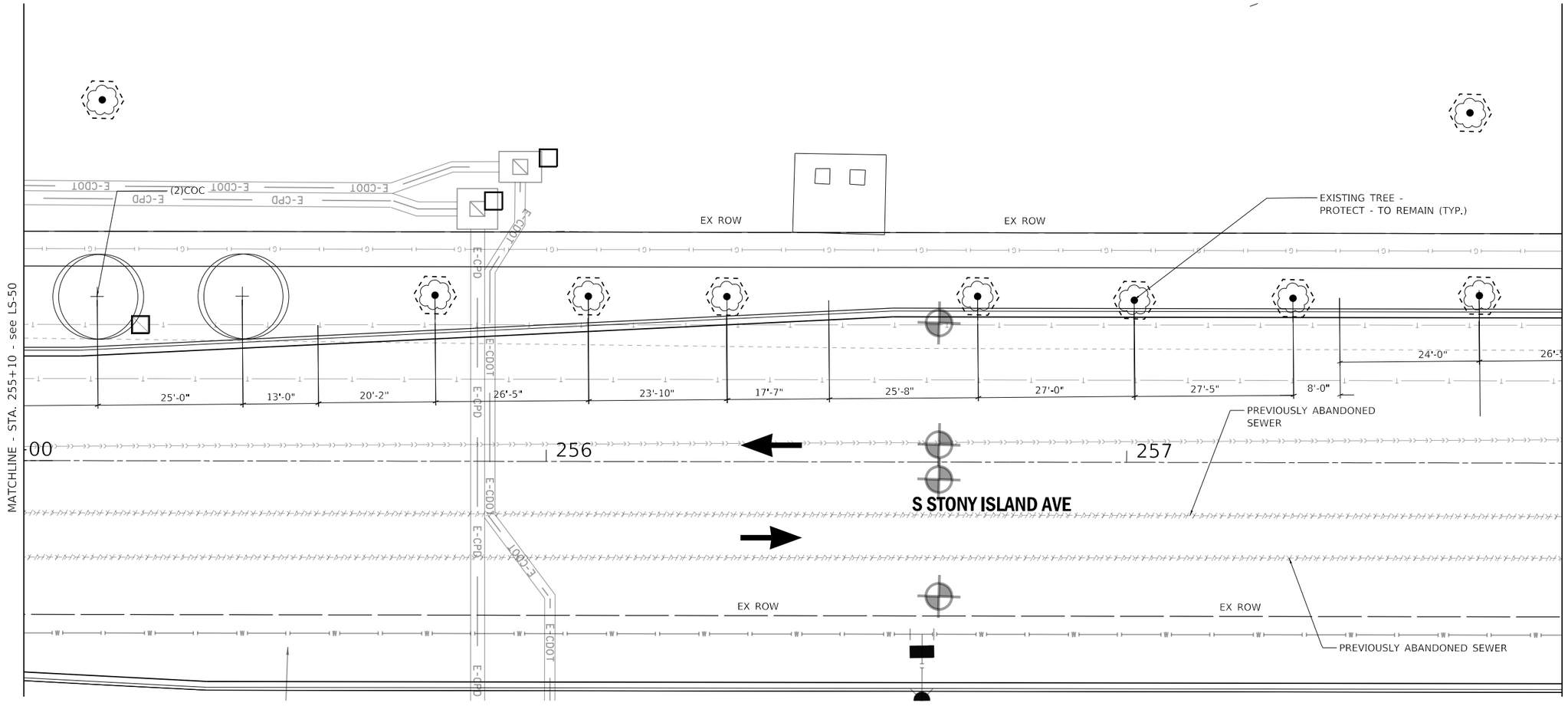


## LEGEND

- SHADE TREE
- ORNAMENTAL TREE
- TREE GRATE
- SALT TOLERANT SOD
- STRUCTURAL SOIL
- STREET LIGHT
- EXISTING TREE

**LS-51 PLANT SCHEDULE**

**MEDIAN TREES**

| CODE | QTY | BOTANIC NAME | COMMON NAME | SIZE | COMMENTS |
|---|---|---|---|---|---|
| SWO | - | SWAMP WHITE OAK | QUERCUS BICOLOR | 2.5"-3" B&B | |
| ULM | - | NEW HORIZON ELM | ULMUS 'NEW HORIZON' | 2.5"-3" B&B | |
| COC | - | HACKBERRY | CELTIS OCCIDENTALIS | 2.5"-3" B&B | |
| KCO | - | KENTUCKY COFFEE | GYMNOCLADUS DIOICUS | 2.5"-3" B&B | |
| MAL | - | CRABAPPLE | MALUS 'RED JEWEL' | 2.5"-3" B&B | |
| SYR | - | IVORY SILK LILAC | SYRINGA RETICULATA | 2.5" - 3" B&B | |
| | | | | | |

**NEW PARKWAY AND TREE PIT TREES**

| CODE | QTY | BOTANIC NAME | COMMON NAME | SIZE | COMMENTS |
|---|---|---|---|---|---|
| SWO | - | SWAMP WHITE OAK | QUERCUS BICOLOR | 2.5"-3" B&B | |
| SLH | - | SKYLINE HONEYLOCUST | GLEDITSIA TRIACANTHOS 'SKYLINE' | 2.5"-3" B&B | |
| ULM | - | NEW HORIZON ELM | ULMUS 'NEW HORIZON' | 2.5"-3" B&B | |
| COC | 2 | HACKBERRY | CELTIS OCCIDENTALIS | 2.5"-3" B&B | |
| KCO | - | KENTUCKY COFFEE | GYMNOCLADUS DIOICUS | 2.5"-3" B&B | |
| MAL | - | CRABAPPLE | MALUS 'RED JEWEL' | 2.5"-3" B&B | |
| SYR | - | IVORY SILK LILAC | SYRINGA RETICULATA | 2.5" - 3" B&B | |

## LOCATION KEY




0' 10' 20' 30'
SCALE IN FEET

| | | | | | |
|---|---|---|---|---|---|
| DESIGN: JDM | | | | | |
| DRAWN: JDM | | | | | |
| CHECKED: PJH | | | | | |
| APPROVED: | NO. | BY | DATE | DESCRIPTION | |
| DATE: 01/22/2021 | REVISIONS | | | | |

CDOT CHICAGO DEPARTMENT OF TRANSPORTATION

CONNECT

LANDSCAPING PLAN
PROPOSED PLANTING
S. STONY ISLAND AVE.

JACKSON PARK MOBILITY IMPROVEMENTS

STA. 255+10 TO STA. 257+75

| | | |
|---|---|---|
| CONTRACT NO. - | TOTAL SHEETS 1434 | SHEET NO. 654 |
| PROJECT NO. B-7-203 | | |
| SCALE: 1"=10' | DRAWING NO. LS-51 | |

PLOT DATE: 5/17/2021
PLOT SCALE: 20.0000 ' / in.
FILE NAME: pw:\\CVIL-PW-INT.cdot.tech.local:CivilTech Projects\Documents\Projects\3153\CADSheets\Roadway\Contract 1\sht-ls-017.dgn

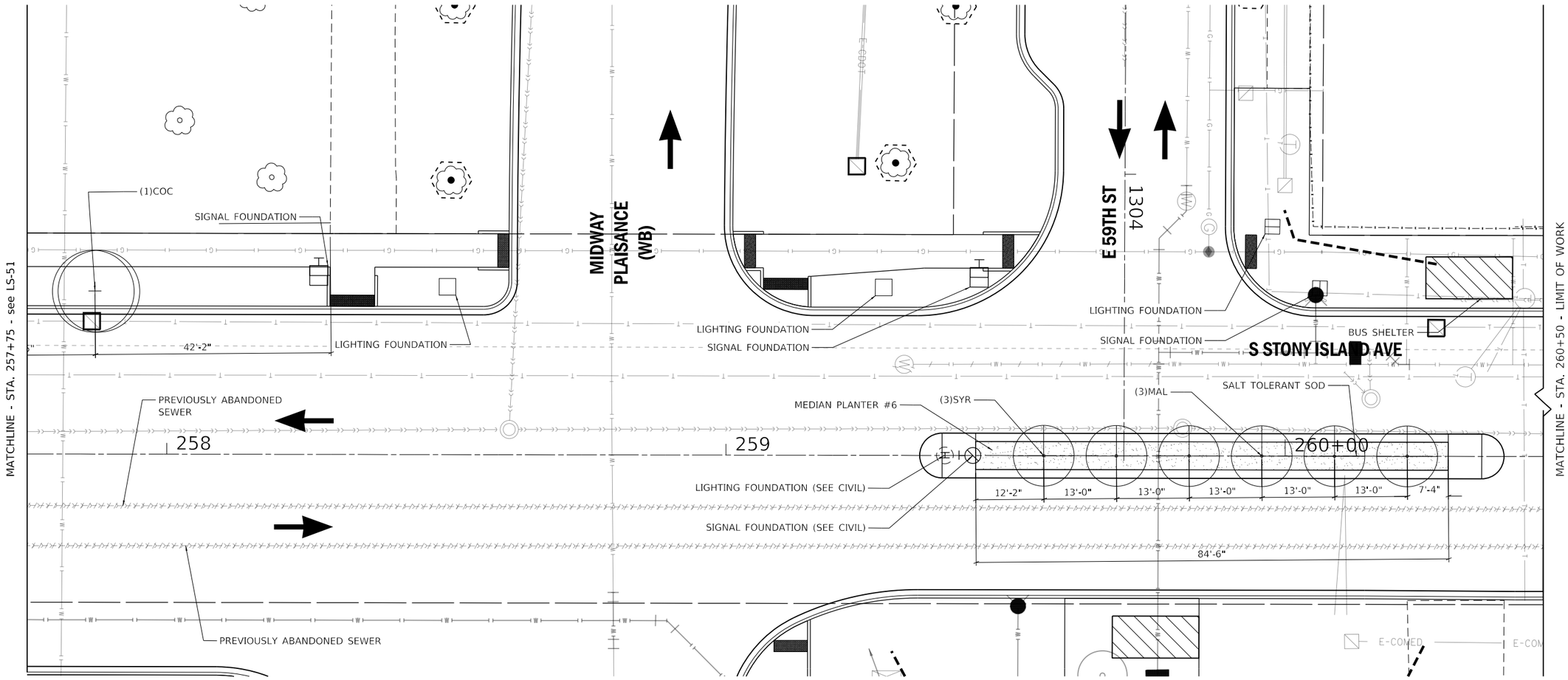


## LEGEND

- SHADE TREE
- ORNAMENTAL TREE
- TREE GRATE
- SALT TOLERANT SOD
- STRUCTURAL SOIL
- STREET LIGHT
- EXISTING TREE

## MEDIAN PLANTER #6

426 SF
85 LF

| LS-52 PLANT SCHEDULE | | | | | |
|---|---|---|---|---|---|
| **MEDIAN TREES** | | | | | |
| **CODE** | **QTY** | **BOTANIC NAME** | **COMMON NAME** | **SIZE** | **COMMENTS** |
| SWO | - | SWAMP WHITE OAK | QUERCUS BICOLOR | 2.5"-3" B&B | |
| ULM | - | NEW HORIZON ELM | ULMUS 'NEW HORIZON' | 2.5"-3" B&B | |
| COC | - | HACKBERRY | CELTIS OCCIDENTALIS | 2.5"-3" B&B | |
| KCO | - | KENTUCKY COFFEE | GYMNOCLADUS DIOICUS | 2.5"-3" B&B | |
| MAL | 3 | CRABAPPLE | MALUS 'RED JEWEL' | 2.5"-3" B&B | |
| SYR | 3 | IVORY SILK LILAC | SYRINGA RETICULATA | 2.5" - 3" B&B | |
| | | | | | |
| **NEW PARKWAY AND TREE PIT TREES** | | | | | |
| **CODE** | **QTY** | **BOTANIC NAME** | **COMMON NAME** | **SIZE** | **COMMENTS** |
| SWO | - | SWAMP WHITE OAK | QUERCUS BICOLOR | 2.5"-3" B&B | |
| SLH | - | SKYLINE HONEYLOCUST | GLEDITSIA TRIACANTHOS 'SKYLINE' | 2.5"-3" B&B | |
| ULM | - | NEW HORIZON ELM | ULMUS 'NEW HORIZON' | 2.5"-3" B&B | |
| COC | 1 | HACKBERRY | CELTIS OCCIDENTALIS | 2.5"-3" B&B | |
| KCO | - | KENTUCKY COFFEE | GYMNOCLADUS DIOICUS | 2.5"-3" B&B | |
| MAL | - | CRABAPPLE | MALUS 'RED JEWEL' | 2.5"-3" B&B | |
| SYR | - | IVORY SILK LILAC | SYRINGA RETICULATA | 2.5" - 3" B&B | |

## LOCATION KEY

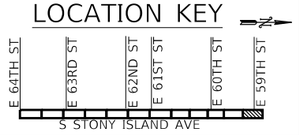


0' 10' 20' 30'
SCALE IN FEET

| | | | | |
|---|---|---|---|---|
| DESIGN: JDM | | | | |
| DRAWN: JDM | | | | |
| CHECKED: PJH | | | | |
| APPROVED: | NO. | BY | DATE | DESCRIPTION |
| DATE: 01/22/2021 | REVISIONS | | | |

CDOT CHICAGO DEPARTMENT OF TRANSPORTATION

C*NECT

LANDSCAPING PLAN
PROPOSED PLANTING
S. STONY ISLAND AVE.

JACKSON PARK MOBILITY IMPROVEMENTS

STA. 257+75 TO STA. 260+50

| | | |
|---|---|---|
| CONTRACT NO. - | TOTAL SHEETS 1434 | SHEET NO. 655 |
| PROJECT NO. B-7-203 | DRAWING NO. LS-52 | |
| SCALE: 1"=10' | | |

PLOT DATE: 5/17/2021
PLOT SCALE: 20.0000 ' / in.
FILE NAME: pw:\\CIVIL-PW-INT.civiltech.local:Civiltech Projects\Documents\Projects\3153\CAD\Sheets\Roadway\Contract 1\sht-lcp-020.dgn

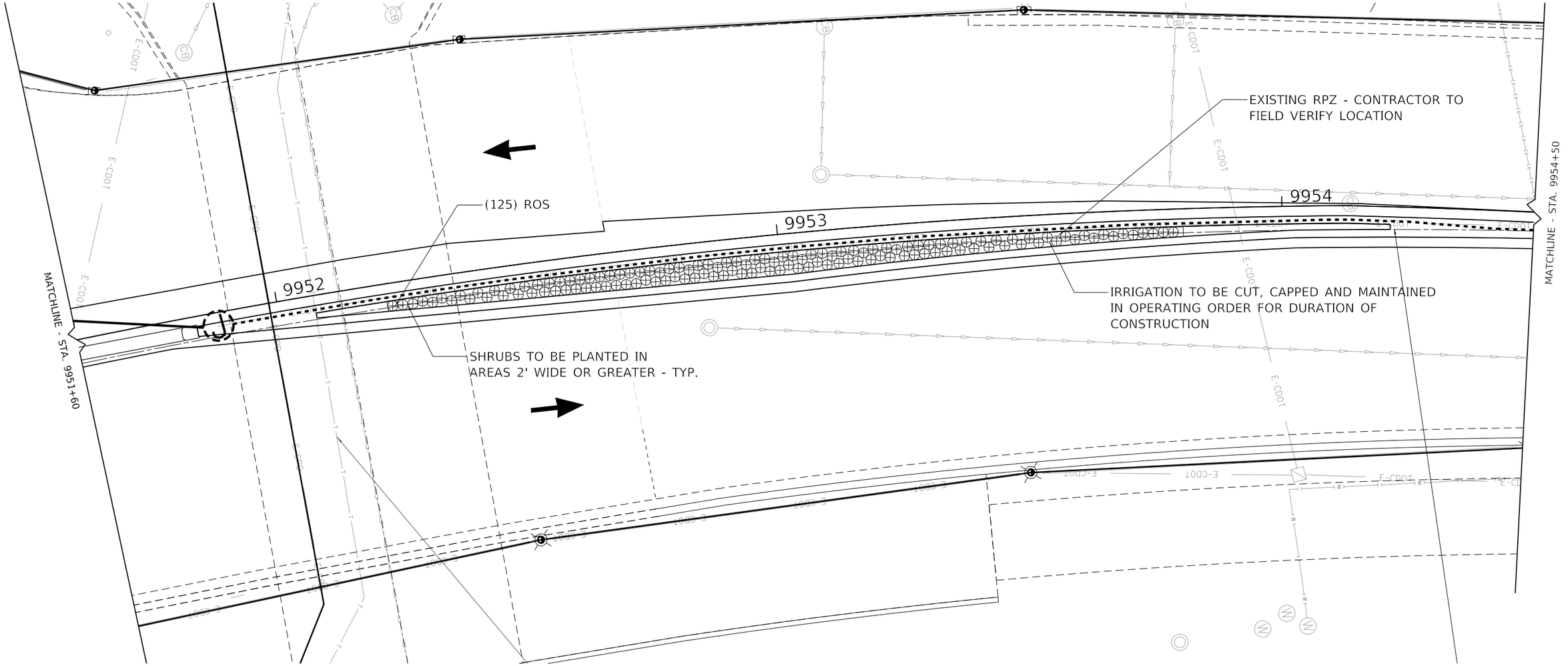


## LEGEND

- SHADE TREE
- ORNAMENTAL TREE
- TREE GRATE
- SHRUB
- SALT TOLERANT SOD
- STRUCTURAL SOIL
- STREET LIGHT
- EXISTING TREE

| CODE | QTY | BOTANIC NAME | COMMON NAME | SIZE | COMMENTS |
|---|---|---|---|---|---|
| ROS | 125 | RUGOSA ROSE | ROSA RUGOSA | #5 | |

0' 10' 20' 30'
SCALE IN FEET

PLOT DATE: 5/17/2021
PLOT SCALE: 20.0000 ' / in.
FILE NAME: pw:\\CWI-PW-INT.civiltech.local\Civiltech Projects\Documents\Projects\3153\C4D\Sheets\Roadway\Contract 1\int-lcs-021.dgn

| | | | | |
|---|---|---|---|---|
| DESIGN: JDM | | | | |
| DRAWN: JDM | | | | |
| CHECKED: PJH | | | | |
| APPROVED: | NO. | BY | DATE | DESCRIPTION |
| DATE: 01/22/2021 | REVISIONS | | | |

CDOT CHICAGO DEPARTMENT OF TRANSPORTATION

C*NECT

LANDSCAPING PLAN
PROPOSED PLANTING
LAKE SHORE DRIVE

JACKSON PARK MOBILITY IMPROVEMENTS

STA. 9951+60 TO STA. 9954+50

| | | |
|---|---|---|
| CONTRACT NO. - | TOTAL SHEETS 1434 | SHEET NO. 656 |
| PROJECT NO. B-7-203 | DRAWING NO. LS-53 | |
| SCALE: 1"=10' | | |

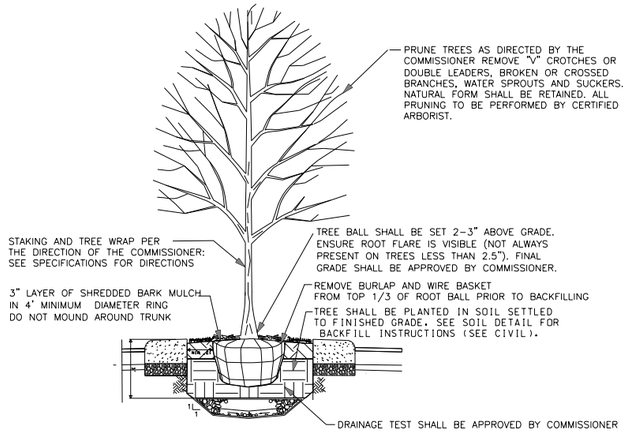


(1) MEDIAN TREE PLANTING DETAIL
NTS

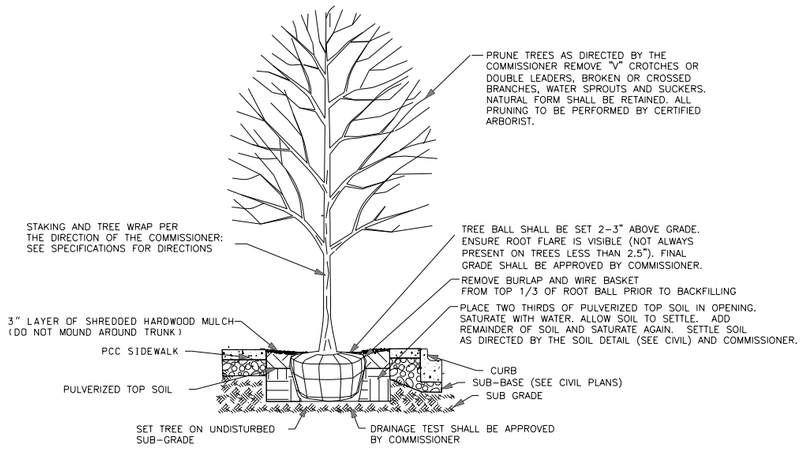


(2) TREE PLANTING IN MULCHED TREE PIT OR NEW PARKWAY
NTS

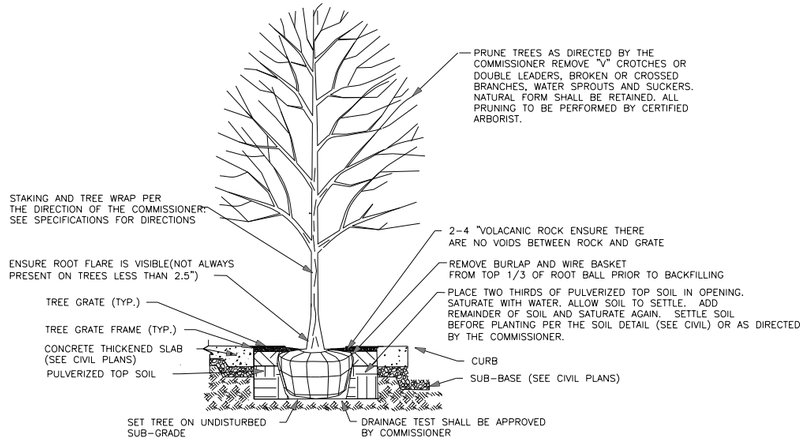


(3) TREE PLANTING IN 5x10 TREE GRATE
NTS

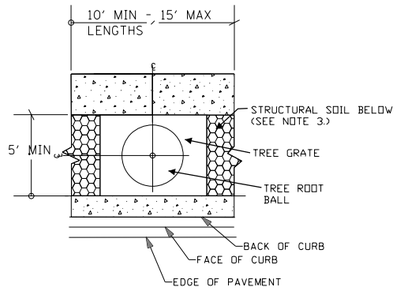


(4) TREE PLANTING IN GRATE
NTS

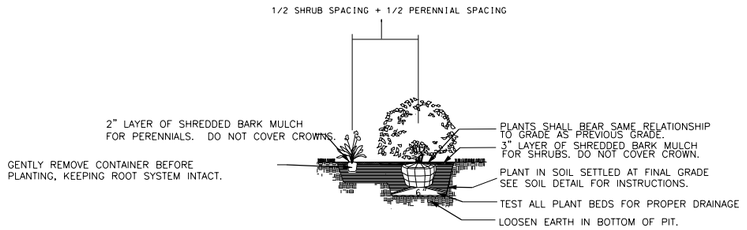


(5) SHRUB AND PERENNIAL PLANTING DETAIL
NTS

GENERAL NOTE:
HAND EXCAVATION IS REQUIRED AT LEAST 18 INCHES ON EITHER SIDE OF A MARKED FACILITY. CONTRACTOR/EXCAVATOR IS EXPECTED TO HONOR ALL TIME/MARKING REQUIREMENTS AND DIG IN A REASONABLE AND PRUDENT MANNER. TO AVOID DAMAGING UNDERGROUND FACILITIES. IF DAMAGE TO AN UNDERGROUND FACILITY SHOULD OCCUR, IMMEDIATELY CALL DIGGER AT (312) 744-7000.

NOTES:
1. THESE DETAILS ARE FOR THE LAYOUT OF THE MULCHED TREE PIT ONLY. SEE TREE PLANTING DETAILS AND SPECIFICATIONS FOR PLANTING DIRECTIONS.

2. SEE TREE PLANTING SPECIFICATIONS AND DETAILS FOR BACKFILL MATERIAL AND PLACEMENT.

3. STRUCTURAL SOIL IS TO BE PLACED ON EXISTING SUBGRADE AT 12" THICK BELOW THE PROPOSED SIDEWALK. IT SHALL BE PLACED IN 5' BANDS BETWEEN A DESIGNATED GROUPING OF TREE PITS ENDING 6' PAST THE GRATE OF THE LAST TREE IN THE GROUP AS SHOWN IN THE CONTRACT PLANS. SEE CIVIL DRAWINGS FOR LIMITS.

**MASTER PLANT SCHEDULE**

**MEDIAN TREES**

| CODE | QTY LS-41 | QTY LS-42 | QTY LS-43 | QTY LS-44 | QTY LS-45 | QTY LS-46 | QTY LS-47 | QTY LS-48 | QTY LS-49 | QTY LS-50 | QTY LS-51 | QTY LS-52 | TTL QTY | BOTANIC NAME | COMMON NAME | SIZE | SPACING | COMMENTS |
|---|---|---|---|---|---|---|---|---|---|---|---|---|---|---|---|---|---|---|
| SWO | 3 | 2 | - | - | 3 | - | 3 | - | 5 | - | - | - | 16 | SWAMP WHITE OAK | QUERCUS BICOLOR | 2.5"-3" B&B | 25' | |
| ULM | - | - | - | 3 | - | - | - | 1 | 2 | - | - | - | 6 | NEW HORIZON ELM | ULMUS 'NEW HORIZON' | 2.5"-3" B&B | 25' | |
| COC | - | - | - | - | - | - | - | - | 3 | - | - | - | 3 | HACKBERRY | CELTIS OCCIDENTALIS | 2.5"-3" B&B | 25' | |
| KCO | 3 | - | - | - | - | 3 | - | - | - | 3 | - | - | 9 | KENTUCKY COFFEE | GYMNOCLADUS DIOICUS | 2.5"-3" B&B | 25' | |
| MAL | 3 | - | - | 3 | 3 | 3 | - | 3 | - | - | - | 3 | 18 | CRABAPPLE | MALUS 'RED JEWEL' | 2.5"-3" B&B | 15' | |
| SYR | - | - | - | - | - | - | - | - | - | - | - | 3 | 3 | IVORY SILK LILAC | SYRINGA RETICULATA | 2.5"-3" B&B | 15' | |

* MEDIANS DO NOT CONTAIN SLH

**NEW PARKWAY AND TREE PIT TREES**

| CODE | QTY LS-41 | QTY LS-42 | QTY LS-43 | QTY LS-44 | QTY LS-45 | QTY LS-46 | QTY LS-47 | QTY LS-48 | QTY LS-49 | QTY LS-50 | QTY LS-51 | QTY LS-52 | TTL QTY | BOTANIC NAME | COMMON NAME | SIZE | SPACING | COMMENTS |
|---|---|---|---|---|---|---|---|---|---|---|---|---|---|---|---|---|---|---|
| SWO | - | - | - | 4 | - | - | - | 1 | 2 | - | - | - | 7 | SWAMP WHITE OAK | QUERCUS BICOLOR | 2.5"-3" B&B | 25' | |
| SLH | 3 | - | - | - | - | - | - | 5 | - | - | - | - | 8 | SKYLINE HONEYLOCUST | GLEDITSIA TRIACANTHOS 'SKYLINE' | 2.5"-3" B&B | 25' | |
| ULM | - | - | - | - | - | - | 3 | - | - | - | - | - | 3 | NEW HORIZON ELM | ULMUS 'NEW HORIZON' | 2.5"-3" B&B | 25' | |
| COC | - | - | - | 1 | 2 | 2 | - | - | - | - | 2 | 1 | 8 | HACKBERRY | CELTIS OCCIDENTALIS | 2.5"-3" B&B | 25' | |
| KCO | - | - | - | - | - | - | 4 | - | - | - | - | - | 4 | KENTUCKY COFFEE | GYMNOCLADUS DIOICUS | 2.5"-3" B&B | 25' | |
| MAL | - | - | - | - | - | - | - | - | - | - | - | - | 0 | CRABAPPLE | MALUS 'RED JEWEL' | 2.5"-3" B&B | 15' | |
| SYR | - | - | - | - | - | - | - | - | - | - | - | - | 0 | IVORY SILK LILAC | SYRINGA RETICULATA | 2.5"-3" B&B | 15' | |

**SHRUBS**

| CODE | QTY | BOTANIC NAME | COMMON NAME | SIZE | COMMENTS |
|---|---|---|---|---|---|
| ROS | 125 | RUGOSA ROSE | ROSA RUGOSA | #5 | |

PLOT DATE: 5/17/2021
PLOT SCALE: 80.0000 ' / in.
FILE NAME: pw:\\CIVIL-PW-INT-civiltech.local\Civiltech Projects\Documents\Projects\3153\CADD\Sheets\Roadway\Contract 1\sht-ls-306.dgn

| | | | | | |
|---|---|---|---|---|---|
| DESIGN: JDM | | | | | |
| DRAWN: JDM | | | | | |
| CHECKED: PJH | | | | | |
| APPROVED: | NO. | BY | DATE | DESCRIPTION | |
| DATE: 01/22/2021 | REVISIONS | | | | |

CDOT CHICAGO DEPARTMENT OF TRANSPORTATION

CONNECT

LANDSCAPING PLAN
TREE PLANTING DETAILS

JACKSON PARK MOBILITY IMPROVEMENTS

STA. TO STA.

| | | | |
|---|---|---|---|
| CONTRACT NO. - | | TOTAL SHEETS | SHEET NO. |
| PROJECT NO. B-7-203 | | 1434 | 657 |
| SCALE: NONE | | DRAWING NO. LS-54 | |

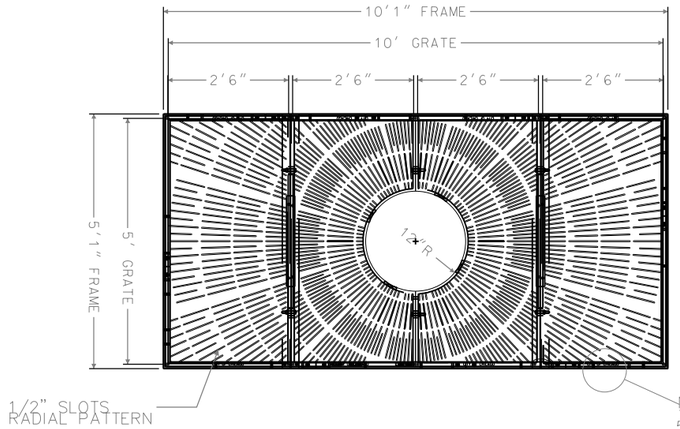


1 5 X 10 TREE GRATE - PLAN VIEW
N.T.S.

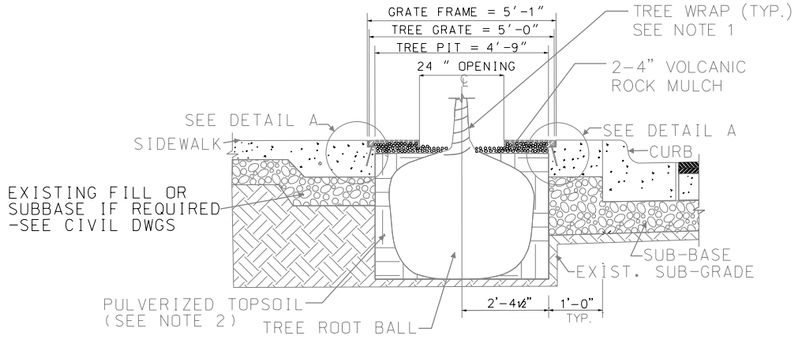


2 5 X 10 TREE PIT - CROSS SECTION
(WITH CAST IRON GRATE FRAME)
N.T.S.

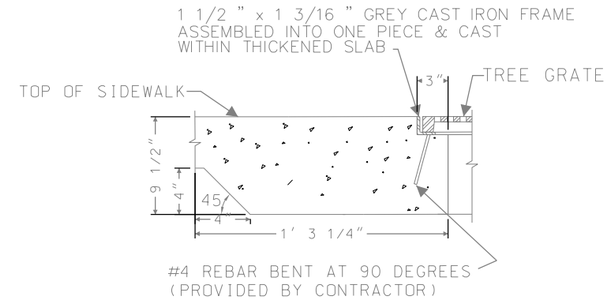


DETAIL A - GRATE FRAME AT THICKENED SLAB
N.T.S.

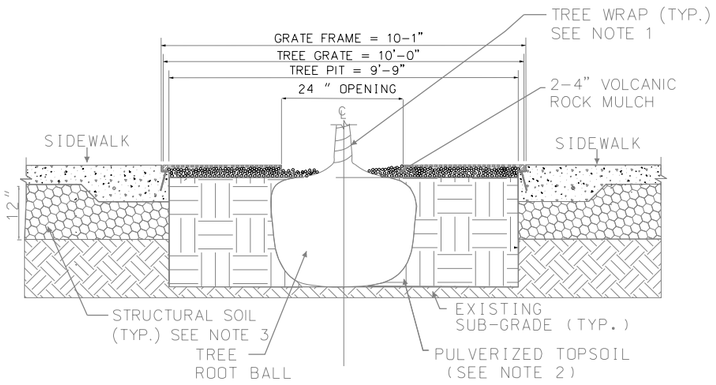


4 5 X 10 TREE PIT - LONGITUDINAL SECTION
(WITH CAST IRON TREE GRATE FRAME)
N.T.S.

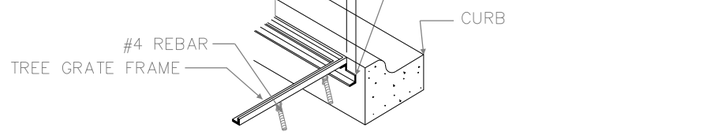


5 TREE GRATE FRAME AT BACK OF CURB
N.T.S.

GENERAL NOTE:
HAND EXCAVATION IS REQUIRED AT LEAST 18 INCHES ON EITHER SIDE OF A MARKED FACILITY. CONTRACTOR/EXCAVATOR IS EXPECTED TO HONOR ALL TIME/MARKING REQUIREMENTS AND DIG IN A REASONABLE AND PRUDENT MANNER, TO AVOID DAMAGING UNDERGROUND FACILITIES. IF DAMAGE TO AN UNDERGROUND FACILITY SHOULD OCCUR, IMMEDIATELY CALL DIGGER AT (312) 744-7000.

NOTES:
1. TREE WRAP SHOULD ONLY BE INSTALLED DURING THE FALL PLANTING SEASON ON SPECIES SUSCEPTIBLE TO FROST AS DETERMINED BY THE COMMISSIONER.

2. SEE TREE PLANTING SPECIFICATIONS AND DETAILS FOR BACKFILL MATERIAL AND PLACEMENT.

3. STRUCTURAL SOIL IS TO BE PLACED ON EXISTING SUBGRADE AT 12" THICK BELOW THE PROPOSED SIDEWALK. IT SHALL BE PLACED IN 5' BANDS BETWEEN A DESIGNATED GROUPING OF TREE PITS ENDING 6' PAST THE GRATE OF THE LAST TREE IN THE GROUP AS SHOWN IN THE CONTRACT PLANS. IF NO STRUCTURAL SOIL IS SPECIFIED, UTILIZE SPECIFIED SUB-BASE.

PLOT DATE: 5/17/2021
PLOT SCALE: 80.0000 ' / in.
FILE NAME: pw:\\CTVIL-PW-INT.cdultech.local\Civiltech Projects\Documents\Projects\3153\CADSheets\Roadway\Contract 1\sht-ls-019.dgn

| DESIGN: JDM | | | | |
|---|---|---|---|---|
| DRAWN: JDM | | | | |
| CHECKED: PJH | | | | |
| APPROVED: | NO. | BY | DATE | DESCRIPTION |
| DATE: 01/22/2021 | REVISIONS | | | |

CHICAGO DEPARTMENT OF TRANSPORTATION

C*NECT

LANDSCAPING PLAN
TREE GRATE PLANTING DETAILS

JACKSON PARK MOBILITY IMPROVEMENTS

STA. TO STA.

| CONTRACT NO. - | TOTAL SHEETS 1434 | SHEET NO. 658 |
|---|---|---|
| PROJECT NO. B-7-203 | DRAWING NO. LS-55 | |
| SCALE: NONE | | |

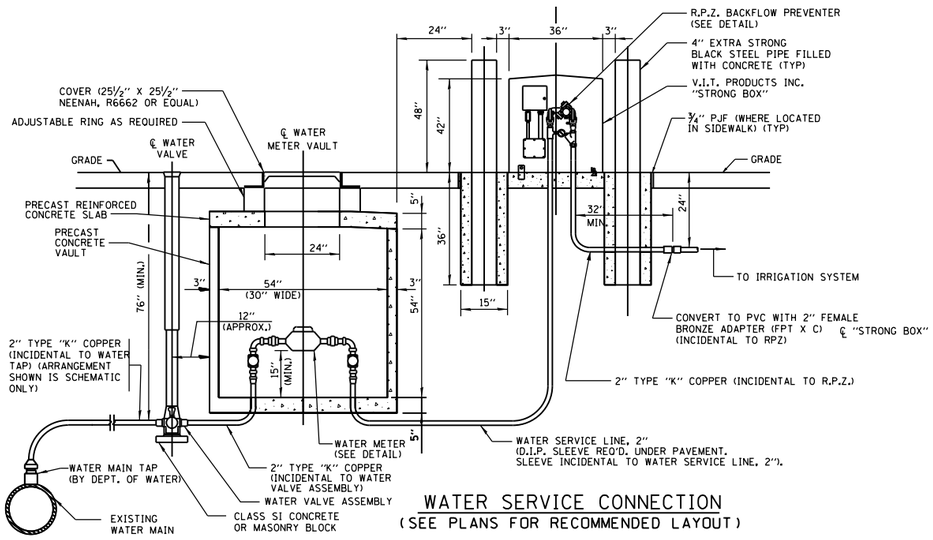


## WATER SERVICE CONNECTION
(SEE PLANS FOR RECOMMENDED LAYOUT)

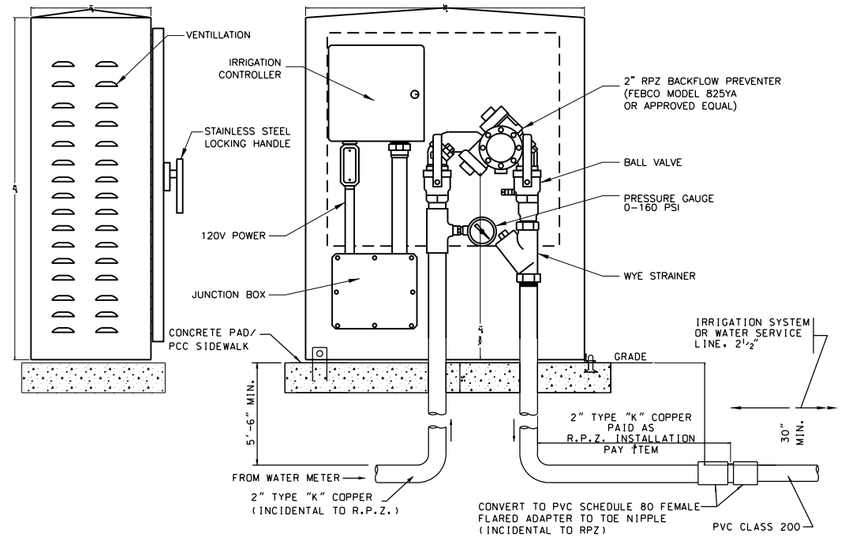


## 2" R.P.Z. AND CONTROLLER INSTALLATION LAYOUT
NOT TO SCALE

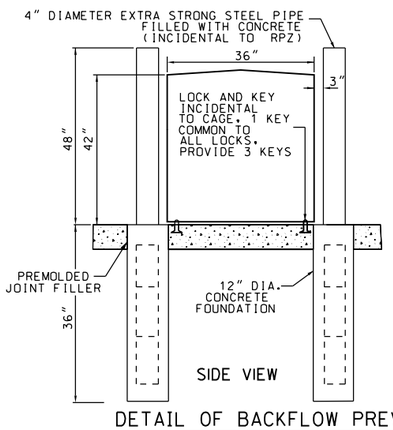


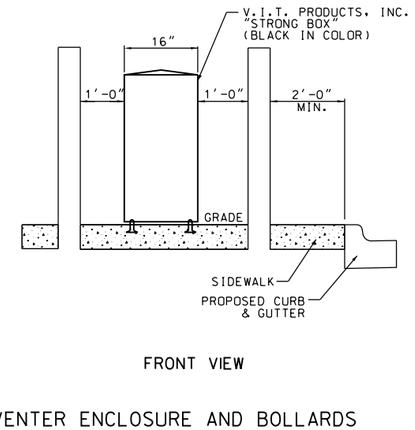


## DETAIL OF BACKFLOW PREVENTER ENCLOSURE AND BOLLARDS
NOT TO SCALE

| KEY |
|---|
| ① TYPE K COPPER |
| ② F.M. FLARED FITTING |
| ③ MALE I.P.T. TO FLARED |
| ④ GATE VALVE |
| ⑤ BRASS NIP |
| ⑥ BRASS ELL |
| ⑦ BRASS UNION |
| ⑧ METER |

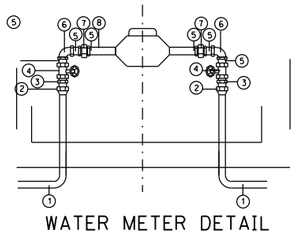

## WATER METER DETAIL
N.T.S

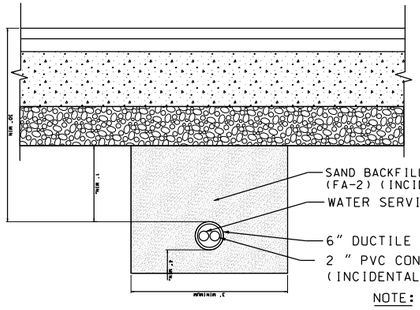


NOTE:
1. PIPE BEDDING, TAMPED IN PLACE 4" MINIMUM UNDER PIPE 1'-0" ABOVE TOP OF PIPE. MUST BE WELL SPADED ON BOTH SIDES OF PIPE.

## WATER SERVICE LINE
NOT TO SCALE

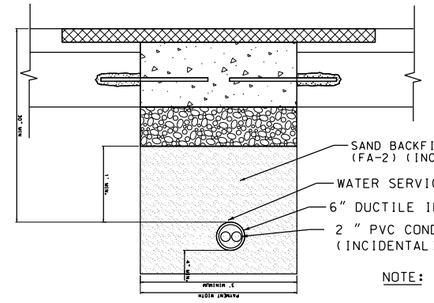


NOTE:
1. PIPE BEDDING, TAMPED IN PLACE 4" MINIMUM UNDER PIPE 1'-0" ABOVE TOP OF PIPE. MUST BE WELL SPADED ON BOTH SIDES OF PIPE.

## WATER SERVICE LINE
NOT TO SCALE

PLOT DATE: 5/17/2021
PLOT SCALE: 80.0000 ' / in.
FILE NAME: pw:\\CTVL-PW-INT.cityhall.cdot.local\CityHall\Projects\3153\CAD\Sheets\Roadway\Contract 1\sht-lcs-018.dgn

| | | | | |
|---|---|---|---|---|
| DESIGN: JDM | | | | |
| DRAWN: JDM | | | | |
| CHECKED: PJH | | | | |
| APPROVED: | NO. | BY | DATE | DESCRIPTION |
| DATE: 01/22/2021 | REVISIONS | | | |

CDOT CHICAGO DEPARTMENT OF TRANSPORTATION

C*NECT

**LANDSCAPING PLAN**
**IRRIGATION DETAILS**

**JACKSON PARK MOBILITY IMPROVEMENTS**

STA. TO STA.

| | |
|---|---|
| CONTRACT NO. - | TOTAL SHEETS: 1434 |
| PROJECT NO. B-7-203 | SHEET NO.: 659 |
| SCALE: NONE | DRAWING NO. LS-56 |

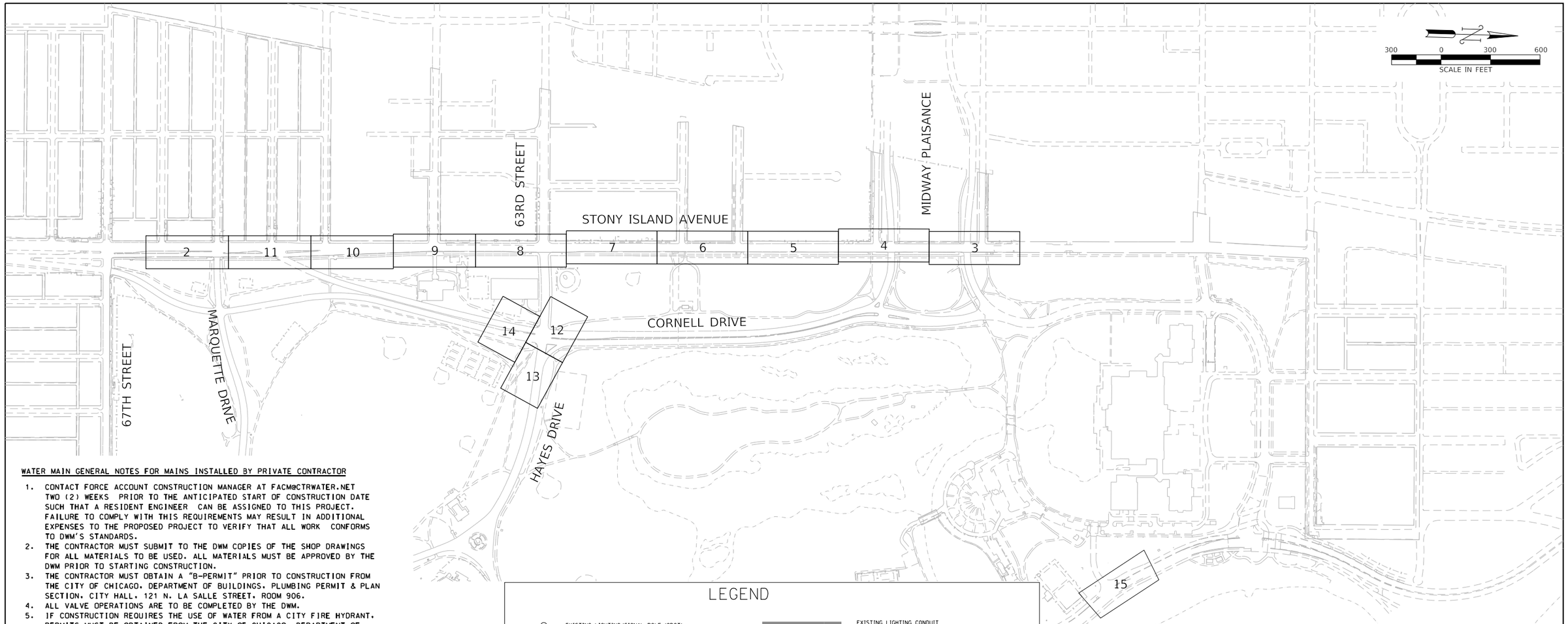


**WATER MAIN GENERAL NOTES FOR MAINS INSTALLED BY PRIVATE CONTRACTOR**

1. CONTACT FORCE ACCOUNT CONSTRUCTION MANAGER AT FACM@CTRWATER.NET TWO (2) WEEKS PRIOR TO THE ANTICIPATED START OF CONSTRUCTION DATE SUCH THAT A RESIDENT ENGINEER CAN BE ASSIGNED TO THIS PROJECT. FAILURE TO COMPLY WITH THIS REQUIREMENTS MAY RESULT IN ADDITIONAL EXPENSES TO THE PROPOSED PROJECT TO VERIFY THAT ALL WORK CONFORMS TO DWM'S STANDARDS.
2. THE CONTRACTOR MUST SUBMIT TO THE DWM COPIES OF THE SHOP DRAWINGS FOR ALL MATERIALS TO BE USED. ALL MATERIALS MUST BE APPROVED BY THE DWM PRIOR TO STARTING CONSTRUCTION.
3. THE CONTRACTOR MUST OBTAIN A "B-PERMIT" PRIOR TO CONSTRUCTION FROM THE CITY OF CHICAGO, DEPARTMENT OF BUILDINGS, PLUMBING PERMIT & PLAN SECTION, CITY HALL, 121 N. LA SALLE STREET, ROOM 906.
4. ALL VALVE OPERATIONS ARE TO BE COMPLETED BY THE DWM.
5. IF CONSTRUCTION REQUIRES THE USE OF WATER FROM A CITY FIRE HYDRANT, PERMITS MUST BE OBTAINED FROM THE CITY OF CHICAGO, DEPARTMENT OF BUILDINGS, PLUMBING PERMIT & PLAN SECTION, CITY HALL, 121 N. LA SALLE STREET, ROOM 906.
6. THE CONTRACTOR SHALL BE RESPONSIBLE FOR STAKING-OUT ALL PROPOSED HORIZONTAL AND VERTICAL FACILITIES FOR THE DWM AS REQUIRED FOR CONSTRUCTION.
7. THE CONTRACTOR SHALL BE RESPONSIBLE FOR OBTAINING ALL APPLICABLE PERMITS (INCLUDING A SEWER PERMIT FROM THE DEPARTMENT OF BUILDINGS SEWER SECTION), EXCAVATION/OSHA SHORING, BACKFILLING/COMPACTION, AND ALL RESTORATION TO CDOT STANDARDS AS REQUIRED FOR CONSTRUCTION PER THE DWM INVOLVEMENT LETTER FOR THIS PROJECT.
8. THE CONTRACTOR SHALL BE RESPONSIBLE FOR MAINTAINING WATER SERVICES AND FIRE PROTECTION DURING CONSTRUCTION.
9. THE CONTRACTOR SHALL MAINTAIN DRAINAGE AT ALL TIMES.
10. THE CONTRACTOR SHALL BE RESPONSIBLE FOR OBTAINING EXACT LOCATIONS AND ELEVATIONS OF ALL THE UTILITIES FROM THE OWNERS OF THE RESPECTIVE UTILITIES.
11. THE CONTRACTOR IS RESPONSIBLE FOR RESOLVING ANY UTILITY CONFLICTS, AND/OR VERIFYING THAT ANY UTILITY IN CONFLICT WITH THE PROPOSED WATER MAIN HAS BEEN RELOCATED.
12. THE CONTRACTOR SHALL PROVIDE THE PROVIDE THE DWM A REDLINE MARKED-UP AS-BUILT DRAWING OF THE WATER MAIN INSTALLATION PRIOR TO THE SOURCE CONNECTION. THE AS-BUILT DRAWING SHOULD BE SUBMITTED TO THE FORCE ACCOUNT CONSTRUCTION MANAGER AT FACM@CTRWATER.NET. THE AS-BUILT DRAWINGS SHALL NOTE EXACT LOCATIONS OF THE WATER MAINS, VALVES, FITTINGS, CONNECTIONS TO EXISTING WATER MAINS, SERVICES, AND ANY SPECIAL INSTALLATIONS. LOCATIONS SHALL BE REFERENCED TO THE STREET RIGHT-OF-WAYS AND THE DEPTH OF COVER SHALL ALSO BE INDICATED. THE AS-BUILT SHALL BE SIGNED AND DATED BY THE CONTRACTOR'S PROJECT COORDINATOR, ALONG WITH THEIR CONTACT INFORMATION. THE DWM WILL NOT PERFORM THE SOURCE CONNECTION UNTIL AS-BUILT DRAWINGS ARE REVIEWED AND APPROVED BY THIS DEPARTMENT.
13. NO WATER SERVICE CONNECTIONS OR TAPS CAN BE MADE UNTIL THE WATER MAIN HAS BEEN APPROVED BY THE DWM AND IS IN SERVICE. INDIVIDUAL WATER SERVICE TAP PERMITS MUST BE ISSUED BY THE DEPARTMENT OF BUILDINGS PLUMBING PERMIT AND PLAN DESK. AND METERS MUST BE INSTALLED PRIOR TO THE SERVICE CONNECTION BEING MADE BY THE DWM.
14. ALL SEWER FACILITIES IMPACTED OR ADJUSTED DURING THE INSTALLATION OF THE PROPOSED WATER MAIN MUST BE MADE COMPLIANT WITH IEPA TITLE 35 REGULATIONS PRIOR TO CONNECTING TO THE EXISTING WATER SYSTEM AND PERFORMING HYDROSTATIC TESTING.

## LEGEND

- EXISTING LIGHTING/SIGNAL POLE (CDOT)
- EXISTING LAWN HYDRANT
- EXISTING WATER VALVE/MANHOLE
- EXISTING FIRE HYDRANT
- EXISTING TELEPHONE VAULT
- EXISTING TRANSFORMER
- EXISTING GAS VALVE/MANHOLE
- EXISTING CATCH BASIN
- EXISTING UTILITIES HANDHOLE/MANHOLE/SPLICE BOX
- EXISTING DRAINAGE INLET
- EXISTING DRAINAGE MANHOLE
- EXISTING TRAFFIC SIGNAL CONTROLLER BOX
- EXISTING TRAFFIC SIGNAL POST

- EXISTING LIGHTING CONDUIT
- ABANDONED UNDERGROUND TELEPHONE
- EXISTING UNDERGROUND TELEPHONE
- EXISTING UNDERGROUND CABLETV
- EXISTING UNDERGROUND ELECTRIC CDOT
- EXISTING UNDERGROUND ELECTRIC COMED
- EXISTING UNDERGROUND ELECTRIC CPD
- EXISTING COMBINED SEWER
- ABANDONED COMBINED SEWER
- EXISTING STORM SEWER
- EXISTING PEOPLE'S GAS LINE
- EXISTING UNDERGROUND WATER/LAWN HYDRANT LINE
- EXISTING CDOT IRRIGATION LINE
- ABANDONED UNDERGROUND LAWN HYDRANT LINE
- EXISTING SANITARY SEWER
- EXISTING UNDERGROUND FIRE ALARM FIBER
- EXISTING AERIAL FIRE ALARM FIBER
- EXISTING DETECTOR LOOP
- EXISTING UNDERGROUND SIGNAL CONDUIT

- **PROPOSED STREET LIGHT**
- **PROPOSED UTILITIES HANDHOLE/MANHOLE/SPLICE BOX**
- **PROPOSED CATCH BASIN**
- **PROPOSED INLET**
- **PROPOSED SEWER MANHOLE**
- **PROPOSED WATER VALVE/MANHOLE**
- **PROPOSED WATER VALVE VAULT**
- **PROPOSED HYDRANT**
- **PROPOSED WATER VALVE**
- **PROPOSED REDUCER**
- **HERITAGE TREE**
- **TREE REMOVAL**

- **PROPOSED STORM SEWER**
- **PROPOSED SANITARY SEWER**
- **PROPOSED COMBINED SEWER**
- **PROPOSED WATER MAIN**
- **PROPOSED ELECTRIC CONDUIT PARK DISTRICT**
- **PROPOSED ELECTRIC CONDUIT CDOT**
- **PROPOSED ELECTRIC CONDUIT IDOT**
- **PROPOSED ELECTRIC CONDUIT COMED**
- **PROPOSED TELEPHONE/CABLE/FIBER/OEMC**
- **PROPOSED GAS**
- **PROPOSED SHEET PILE**

PLOT DATE: 5/17/2021
PLOT SCALE: 7200.0000 ' / in.
FILE NAME: pw:\\cdot-sawin.cdottech.local:CDOTtech Projects\Documents\Projects\3193\CAD\Sheets\Water Main\wm-001.dgn

| | | | | |
|---|---|---|---|---|
| DESIGN: CZ | | | | |
| DRAWN: CZ | | | | |
| CHECKED: DM | | | | |
| APPROVED: | NO. | BY | DATE | DESCRIPTION |
| DATE: 01/22/2021 | REVISIONS | | | |

CHICAGO DEPARTMENT OF TRANSPORTATION

C*NECT

**WATER MAIN REPLACEMENT KEY PLAN**

**JACKSON PARK MOBILITY IMPROVEMENTS**

STA. TO STA.

| | |
|---|---|
| CONTRACT NO. - | TOTAL SHEETS 1434 / SHEET NO. 660 |
| PROJECT NO. B-7-203 | DRAWING NO. WM-1 |
| SCALE: 1"=300' | |

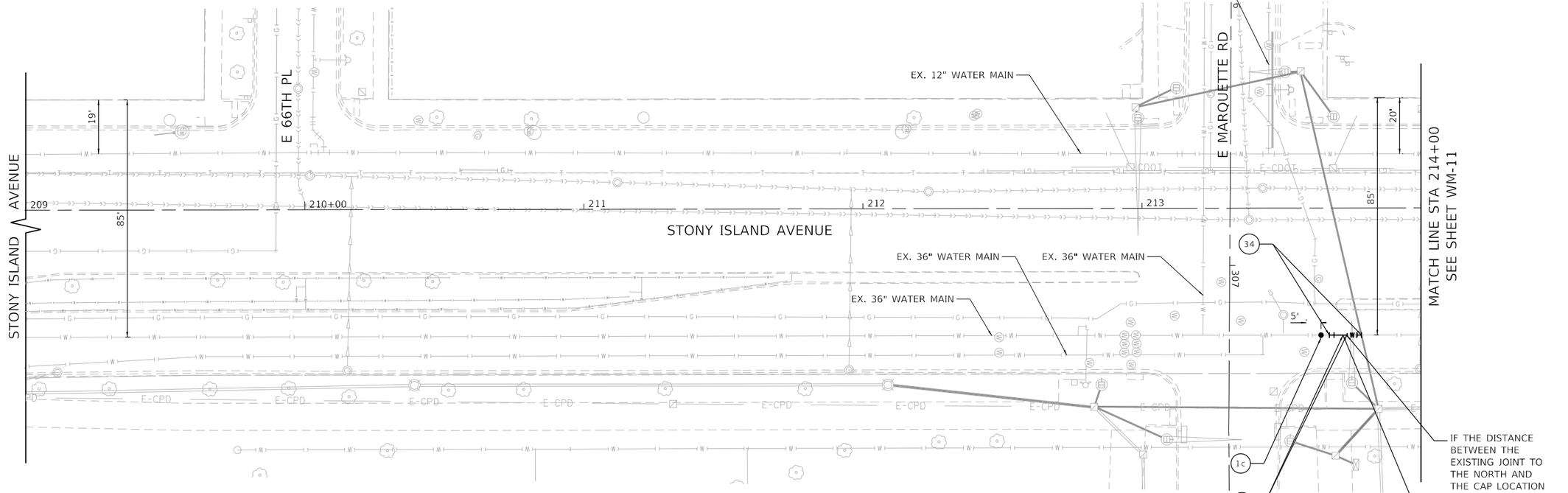


(1a) CONTACT THE D.W.M. AT LEAST 2 WEEKS PRIOR TO CONSTRUCTION TO SCHEDULE THE OPERATION OF ALL VALVES NECESSARY TO COMPLETE WORK.

(1b) DE-ENERGIZE THE EXISTING 36" FEEDER MAIN TO THE NORTH AND SOUTH. CUT, CAP AND BRACE THE EXISTING 36" FEEDER MAIN TO THE NORTH AND SOUTH PER BRACING DETAIL. CONTRACTOR TO PROVIDE DETAIL DESIGN AND STRUCTURAL CALCULATIONS. RE-ENERGIZE THE EXISTING 36" FEEDER MAIN TO THE SOUTH
WITH: 2-36" MJ CAPS
CUT, CAP, AND BRACE (TO THE WEST) THE INTERSECTING GRID MAINS AT 59TH ST., 60TH ST., AND 63RD ST.

(1c) INSTALL 2" TEST TAP IN BASIN ADJACENT TO AND NORTH OF THE EXISTING BUTTERFLY VALVE. INSTALL WHIP TO MONITOR PRESSURE DURING CONSTRUCTION. REMOVE WHIP AFTER CONSTRUCTION.

FOR NOTE 2 SEE SHEET NO. WM-3
FOR NOTE 32 SEE SHEET NO. WM-11

(34) DE-ENERGIZE THE EXISTING 36" FEEDER MAIN TO THE SOUTH. REMOVE THE TEMPORARY CAPS OF NOTE 1b AND CONNECT THE EXISTING 36" FEEDER MAIN TO THE NORTH AND SOUTH
WITH: 2-36" TRANSITION SLEEVES (CUT TO FIT FILLER PIECE)
14' OF 36" D.I.W.P.
FLUSH AND SAMPLE THE NEW WATER MAIN IN ACCORDANCE WITH WATER QUALITY REQUIREMENTS

FOR NOTE 35 SEE SHEET NO. WM-6

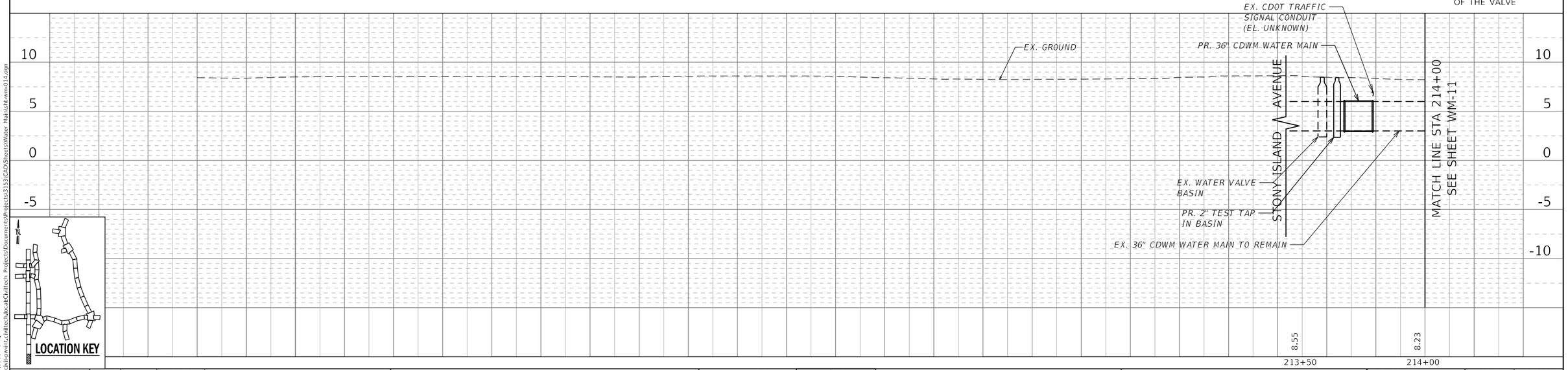





| | | | | |
|---|---|---|---|---|
| DESIGN: CZ | | | $REV3 | |
| DRAWN: CZ | | | $REV2 | |
| CHECKED: DM | | | $REV1 | |
| APPROVED: | NO. | BY | DATE | DESCRIPTION |
| DATE: 03/29/2021 | REVISIONS | | | |

CHICAGO DEPARTMENT OF TRANSPORTATION

C*NECT

**WATER MAIN REPLACEMENT**
**PLAN AND PROFILE**
**S. STONY ISLAND AVE.**

**JACKSON PARK MOBILITY IMPROVEMENTS**

STA. TO STA.

| | |
|---|---|
| CONTRACT NO. - | TOTAL SHEETS 1434 / SHEET NO. 661 |
| PROJECT NO. B-7-203 | DRAWING NO. WM-2 |
| SCALE: 1"=20' | |

PLAN: SURVEYED, PLOTTED, ALIGNMENT CHECKED, RT. OF WAY CHECKED, CADD FILE NAME, NOTE BOOK, NO., BY, DATE

PROFILE: SURVEYED, PLOTTED, CROSS SECTIONS, B.M. NOTED, STRUCTURE NOTATNS CHKD, NOTE BOOK, NO., BY, DATE

PLOT DATE: 5/17/2021
PLOT SCALE: 1.480.0000 ' / ft.
FILE NAME: pw:\\cdot-sswint-c.civiltech.local:CivilTech Projects\Documents\Projects\3133\CAD\Sheets\Water Main\sht-wm-014.dgn

PLAN — SURVEYED / PLOTTED / ALIGNMENT CHECKED / RT. OF WAY CHECKED / CADD FILE NAME / NOTE BOOK / NO. / BY / DATE

PROFILE — SURVEYED / PLOTTED / CROSS SECTIONS CHECKED / B.M. NOTED / STRUCTURE NO/ATHS CHKD / NOTE BOOK / NO. / BY / DATE

9 SET: 1-4½" FIRE HYDRANT AT 276' S.S.L., (2' BEHIND PROPOSED CURB)
1-8" MJ VALVE AT 276' S.S.L., 72' E.W.L.
(IMMEDIATELY ADJACENT TO WATER MAIN)
1-36"x8" 3BMJ TEE AT 276' S.S.L., 69' E.W.L.
1-8"x12" B+PEMJ OFFSET (IF REQUIRED)
11' OF 8" D.I.W.P.
FLANGE COLOR CODE: BLUE
THE FIRE HYDRANT MUST BE RESTRAINED.
CONSTRUCT ONE (1) VALVE BASIN.
INSTALL DRAIN TILE.

FOR NOTE 10 SEE SHEET NO. WM-4

THE CONSTRACTOR SHALL COORDINATE WITH CPD AND THE MUSEUM OF SCIENCE AND INDUSTRY (MSI) ON THE EXPECTED DURATION AND ACCEPTABLE TIMES FOR WATER SHUT DOWNS FOR RELOCATION OF THIS 10 FEET SEGMENT.

EX. 2" CPD WATER

EX. 16" CPD WATER

MIDWAY PLAISANCE

E 59TH ST

EX. 12" WATER MAIN

B — 93 LF OF EX. 12" WATER MAIN TO BE REMOVED

REMOVE AND REPLACE EXISTING SEWER PRIOR TO 12" WM INSTALLATION

REMOVE AND REPLACE EXISTING SEWER PRIOR TO 8" HYDRANT LEAD INSTALLATION

B — THE EXISTING VALVE BASIN IS TO BE REMOVED. DELIVER THE FRAME AND LID TO THE DISTRICT YARD. (5 VALVE BASINS)

A — REMOVE THE OLD FIRE HYDRANT AND DELIVER IT TO THE DISTRICT YARD. (1 FIRE HYDRANT)
REMOVE 11 LF FIRE HYDRANT LEAD

CHLORINATION AND TESTING OF PIPING
SWAB ALL PIPE AND FITTINGS THAT WILL NOT BE CHLORINATED WITH CHLORINE SOLUTION AND FLUSH PER WATER QUALITY (312) 744-8190. VISUALLY INSPECT AT OPERATING PRESSURE PRIOR TO BACKFILLING.

20 0 20 40
SCALE IN FEET

MATCH LINE STA 256+50
SEE SHEET WM-4

STONY ISLAND AVENUE

ABANDONED 12" WATER MAIN

INSTALL 39' OF 36" R.J.D.I.W.P.

INSTALL 24' OF 36" R.J.D.I.W.P.

INSTALL 57' OF 36" R.J.D.I.W.P.

INSTALL 59' OF 36" R.J.D.I.W.P.

257 258 259 260+00 261

69' 85' 85'

16' 15' 5' 5' 5' 5' 5' 10'

EX. 36" WATER MAIN TO BE REMOVED

REMOVE AND REPLACE EXISTING SEWER PRIOR TO 36" WM INSTALLATION

91 LF EX. 36" WATER MAIN TO BE ABANDONED

EX. 36" WATER MAIN TO BE REMOVED

A — REMOVE THE OLD FIRE HYDRANT AND DELIVER IT TO THE DISTRICT YARD. (1 FIRE HYDRANT)

2 FOR NOTE 1 SEE SHEET NO. WM-2
CONNECT THE NEW 36" FEEDER MAIN TO THE NEAREST EXISTING 36" FEEDER MAIN JOINT TO THE NORTH. REMOVE THE EXISTING 36" FEEDER MAIN AS NECESSARY AND INSTALL 36" PIPE TO THE SOUTH WITH:1-36" TRANSITION SLEEVE (CUT TO FIT FILLER PIECE)

3 SET: 1-36"x 12" 3BMJ TEE AT 25' S.N.L., 85' E.W.L.
1-12" MJ VALVE AT 25' S.N.L., 80' E.W.L.
CONSTRUCT ONE (1) VALVE BASIN
TEMPORARILY CAP AND BRACE THE VALVE

4 SET: 1-2" TEST TAP AND PRECAST BASIN AT 30' S.N.L., 85' E.W.L.
1-36" BUTTERFLY VALVE AT 35' S.N.L., 85' E.W.L.
1-2" TEST TAP AND PRECAST BASIN AT 40' S.N.L., 85' E.W.L.
1-36"x24" 3BMJ TEE (PLUGGED BRANCH) AT 45' S.N.L., 85' E.W.L.
(INSPECTION MANHOLE WITH PRECAST BASIN)
CONSTRUCT FOUR (4) VALVE BASINS.
CLOSE VALVE.

5 SET: 1-4½" FIRE HYDRANT AT 12' N.S.L., (2' BEHIND PROPOSED CURB)
1-8" MJ VALVE AT 12' N.S.L., 82' E.W.L.
(IMMEDIATELY ADJACENT TO WATER MAIN)
1-36"x8" 3BMJ TEE AT 12' N.S.L., 85' E.W.L.
1-8"x12" B+PEMJ OFFSET (IF REQUIRED)
1-8"x⅛ 2BMJ BEND
20' OF 8" D.I.W.P.
ROLL TEE AND ADD 45° BEND TO PROVIDE 5' OF COVER
FLANGE COLOR CODE: BLUE
THE FIRE HYDRANT MUST BE RESTRAINED.
CONSTRUCT ONE (1) VALVE BASIN.
INSTALL DRAIN TILE.

6 CHANGE DEPTH OF COVER FROM 2'-0" TO 5'-0" DEPTH OF COVER ON THE WATER MAIN
WITH:2-36"x$^{1}/_{32}$ 2BMJ VERTICAL BENDS AT 11' N.S.L. & 4' S.S.L., 85' E.W.L.

7 SET: 1-8" BLOW-OFF VALVE AT 14' S.S.L., 85' E.W.L.
PER DETAIL FM-19.
WITH: 1-36"x8" 3BMJ TEE AT 14' S.S.L., 85' E.W.L.
1-8" MJ VALVE AT 18' S.S.L., 85' E.W.L.
1-8"x⅛ 2BMJ BEND
1-8"x8" 3BMJ TEE
1-8" MJ PLUG
1-8" MJ CAP
CONSTRUCT ONE (1) VALVE BASIN.

8 CHANGE LINE OF PIPE FROM 69' E.W.L. TO 85' E.W.L.
WITH:2-36"x⅛ 2BMJ BENDS
TEMPORARILY PLUG AND BRACE THE PIPE AFTER RESTRAINED JOINT LENGTH ACHIEVED. RE-ENERGIZE THE 36" WATER MAIN FROM THE VALVE NORTHWARD. FLUSH AND INSPECT THE NEWLY CONSTRUCTED WATER MAIN AT OPERATING PRESSURE. REMOVE THE TEMPORARY CAP AND INSTALL 36" PIPE TO THE SOUTH.

8a REMOVE THE TEMPORARY CAP OF NOTE 3 AND INSTALL 12" D.I.W.P. TO THE WEST
SET: 1 - 12"x 12" 3BMJ TEE AT 25' SNL, 21' EWL
INSTALL 12" D.I.W.P. TO THE NORTH

SET: 1-4½" FIRE HYDRANT AT 1' N.N.L., (2' BEHIND PROPOSED CURB)
1-12"x8" 3BMJ TEE AT 1' N.N.L., 23' E.W.L.
1-8"x12" B+PEMJ OFFSET (IF REQUIRED)
11' OF 8" D.I.W.P.
FLANGE COLOR CODE: YELLOW
THE FIRE HYDRANT MUST BE RESTRAINED.

SET: 1 - 12" MJ VALVE AT 6' NSL, 21' EWL
TEMPORARILY CAP AND BRACE THE PIPE AND VALVE GO OVER SEWER MAIN WITH AT LEAST 18" OF VERTICAL SEPERATION BETWEEN THE BOTTOM OF THE WATER MAIN AND THE TOP OF THE EXISTING SEWER. THE WATER MAIN MUST HAVE AT LEAST 5' DEPTH OF COVER.

8b AFTER THE NEWLY INSTALLED 36" WATER MAIN IS APPROVED FOR SERVICE BY DWM. CONNECT THE NEW 12" WATER MAIN TO THE EXISTING 12" WATER MAIN
WITH: 2-12"x⅛ 2BMJ BENDS
1-12" MJ SLEEVE
1-12" TRANSITION SLEEVE
FLUSH AND SAMPLE THE NEW WATER MAIN ACROSS STONY ISLAND AND NORTH TO THE VALVE OF NOTE 8a

8c AFTER THE NEWLY INSTALLED 12"WATER MAIN IS APPROVED FOR SERVICE BY DWM CONNECT THE NEW 12" WATER MAIN TO THE EXISTING 12" WATER MAIN
WITH: 2- 12"x⅛ BENDS
1-12" TRANSITION SLEEVE

8d REMOVE THE TEMPORARY PLUG OF NOTE 8 AND INSTALL 36" D.I.W.P. TO THE SOUTH

MATCH LINE STA 256+50
SEE SHEET WM-4

10 5 0 -5

PR. 12" DIP CDOT SEWER
EX. 2" PARK DISTRICT SPRINKLER (EL. UNKNOWN)
PR. 8" DIP CDOT SEWER
PR. 18" DIP CDOT SEWER
PR. 3(3") CDOT ELE. CONDUIT
EX. CDOT CONDUIT (EL. UKNOWN)
EX. CDOT TRAFFIC/ELEC. CONDUIT (EL. UNKNOWN)
PR. 3(3") CDOT ELE. CONDUIT
EX. CDOT TRAFFIC SIGNAL CONDUIT (EL. UNKNOWN)
PR. 2" CDOT ELE. CONDUIT
PR. 2" CDOT ELE. CONDUIT
EX. 16" PARK DISTRICT WATER MAIN (INV. UNKNOWN)
EX. 12" CDWM WATER MAIN
PR. GROUND
EX. GROUND
EX. 36" CDWM WATER MAIN TO BE REMOVED
MIN. 18"
PR. 36" CDWM WATER MAIN
HORIZONTAL BEND
EX. CDOT SEWER SIZE, INV. UNKNOWN TO BE REMOVED PRIOR TO INSTALLATION OF 36" WATER MAIN
PR. 16" PARK DISTRICT WATER MAIN 36" MAX. TRENCH WIDTH UNDER WATER MAIN(S)
PR. BLOW-OFF VALVE BASIN
PR. INSPECTION MH
PR. TEST TAP BASIN
PR. WATER VALVE VAULT
PR. TEST TAP BASIN
EX. 8" HYDRANT LEAD
EX. 8" WATER
EX. WATER VALVE MH/VAULT TO BE REMOVED
EX. 8" WATER
EX. 36" CDWM WATER MAIN TO REMAIN
STONY ISLAND AVENUE
59TH STREET

EX. WATER VALVE MH/VAULT TO BE REMOVED
EX. CDOT CONDUIT (EL. UNKNOWN)
PR. 3(3") CDOT ELE. CONDUIT
EX. AT&T CONDUIT (EL. UNKNOWN)
PR. GROUND
EX. GROUND
PR. WATER VALVE VAULT
PR. 1(2") CDOT ELE. CONDUIT
EX. CDOT CONDUIT (EL. UNKNOWN)
EX. 8" PGL GAS (EL. UNKNOWN)
PR. 36" CDWM WATER MAIN
PR. 12" CDWM WATER MAIN
EX. 12" CDWM WATER MAIN TO BE REMOVED
EX. 12" STORM SEWER TO BE ABANDONED (EL. UNKOWN)
EX. 13-1/2' COMBINED DWM SEWER
ABANDONED 12" CDWM WATER MAIN
EX. 12 " COMBINED SEWER TO BE REMOVED PRIOR TO INSTALLATION OF 36" WATER MAIN (EL. UNKNOWN)
PR. 8" DIP CDOT SEWER 36" MAX. TRENCH WIDTH UNDER WATER MAIN(S)
HORIZONTAL BEND
EX. 12" CDWM WATER MAIN TO REMAIN

6.91 6.97 | 7.09 7.05 | 7.03 6.98 | 6.92 6.83 | 6.77 6.70 | 6.94 7.30 | 7.20 7.27 | 7.54 7.50 | 7.76 7.67

256+50 257+00 257+50 258+00 258+50 259+00 259+50 260+00 1304+00 1305+00

LOCATION KEY

| DESIGN: CZ | | | $REV3 | |
|---|---|---|---|---|
| DRAWN: CZ | | | $REV2 | |
| CHECKED: DM | | | $REV1 | |
| APPROVED: | NO. | BY | DATE | DESCRIPTION |
| DATE: 03/29/2021 | REVISIONS | | | |

CDOT CHICAGO DEPARTMENT OF TRANSPORTATION

C*NECT

WATER MAIN REPLACEMENT
PLAN AND PROFILE
S. STONY ISLAND AVE.

JACKSON PARK MOBILITY IMPROVEMENTS

STA. TO STA.

| CONTRACT NO. - | TOTAL SHEETS 1434 | SHEET NO. 662 |
|---|---|---|
| PROJECT NO. B-7-203 | DRAWING NO. WM-3 | |
| SCALE: 1"=20' | | |

PLOT DATE: 5/17/2021
PLOT SCALE: 480.0000 ' / ft.
FILE NAME: pw:\\cwilswsvint.cwilltech.local:CwilTech Projects\Documents\Projects\3133\CAD\Sheets\Water Main\lsht-wm-010.dgn

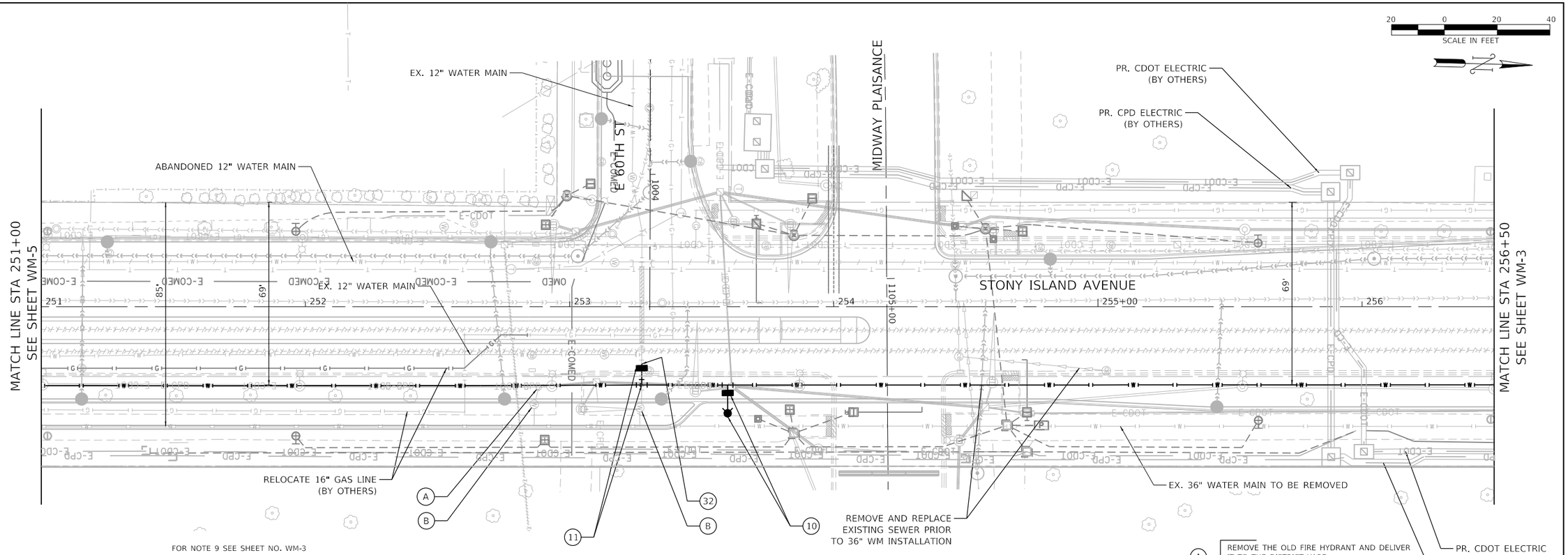


FOR NOTE 9 SEE SHEET NO. WM-3

(10) SET: 1-4½" FIRE HYDRANT AT 65' N.S.L., (4.5' BEHIND PROPOSED CURB)
1-8" MJ VALVE AT 65' N.S.L., 72' E.W.L.
(IMMEDIATELY ADJACENT TO WATER MAIN)
1-36"x8" 3BMJ TEE AT 65' N.S.L., 69' E.W.L.
17' OF 8" D.I.W.P.
FLANGE COLOR CODE: BLUE
THE FIRE HYDRANT MUST BE RESTRAINED.
CONSTRUCT ONE (1) VALVE BASIN.
INSTALL DRAIN TILE.

(11) CUT, CAP AND BRACE THE EXISTING 12" WATER MAIN TO THE WEST
WITH:1-12" MJ CAP
SET: 1-36"x 12" 3BMJ TEE AT 32' N.S.L., 69' E.W.L.
1-12" MJ VALVE AT 32' N.S.L., 61' E.W.L.
2-12" 1/8 BENDS AT 32' N.S.L., 62'&64' E.W.L.
8' OF 12" D.I.W.P.
TEMPORARILY CAP AND BRACE THE 12" PIPE.
CONSTRUCT ONE (1) VALVE BASIN.

FOR NOTE 12 SEE SHEET NO. WM-5
FOR NOTE 33 SEE SHEET NO. WM-2

(32) AFTER THE NEWLY INSTALLED 36" WATER MAIN IS FLUSHED AND PRESSURE TESTED, REMOVE THE TEMPORARY CAP OF NOTE 11 AND CONNECT THE NEW 12" WATER MAIN TO THE EXISTING 12" D.I. WATER MAIN AT 32' N.S.L., 61' E.W.L.
WITH: 1-12" MJ SLEEVE
CHLORINATE THE NEW WATER MAIN USING THE VALVE OF NOTE 11

FOR NOTE 33 SEE SHEET NO. WM-11.

(A) REMOVE THE OLD FIRE HYDRANT AND DELIVER IT TO THE DISTRICT YARD. (1 FIRE HYDRANT)

(B) THE EXISTING VALVE BASIN IS TO BE REMOVED. DELIVER THE FRAME AND LID TO THE DISTRICT YARD. (2 VALVE BASINS)

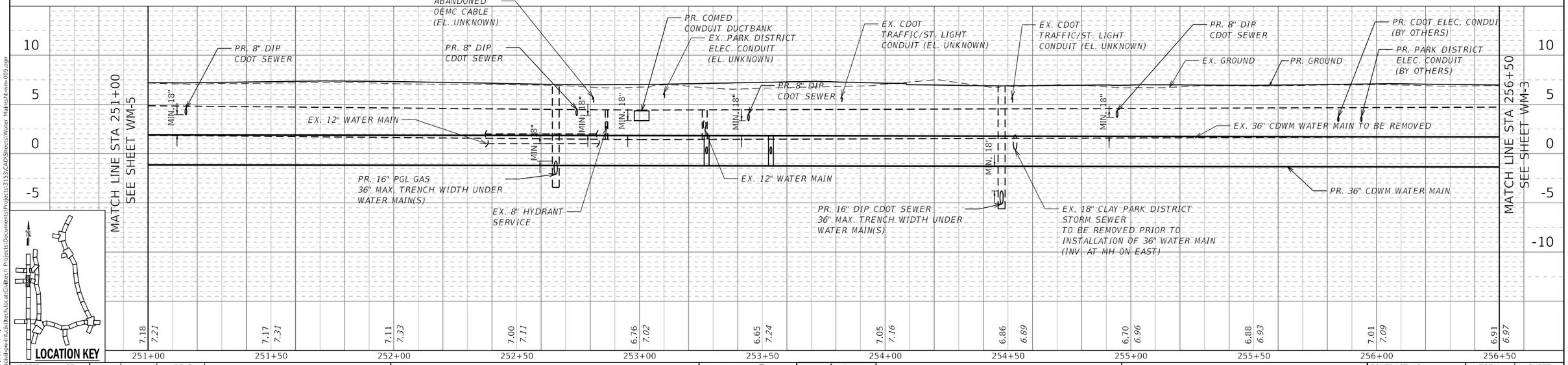


LOCATION KEY

| | | | | |
|---|---|---|---|---|
| DESIGN: CZ | | | $REV3 | |
| DRAWN: CZ | | | $REV2 | |
| CHECKED: DM | | | $REV1 | |
| APPROVED: | NO. | BY | DATE | DESCRIPTION |
| DATE: 03/29/2021 | REVISIONS | | | |

CDOT CHICAGO DEPARTMENT OF TRANSPORTATION

C*NECT

**WATER MAIN REPLACEMENT PLAN AND PROFILE S. STONY ISLAND AVE.**

**JACKSON PARK MOBILITY IMPROVEMENTS**

STA. 251+00 TO STA. 256+50

| CONTRACT NO. | TOTAL SHEETS | SHEET NO. |
|---|---|---|
| - | 1434 | 663 |
| PROJECT NO. B-7-203 | DRAWING NO. WM-4 | |
| SCALE: 1"=20' | | |

PLAN: SURVEYED, PLOTTED, ALIGNMENT CHECKED, RT. OF WAY CHECKED, CADD FILE NAME, NOTE BOOK, NO., BY, DATE

PROFILE: SURVEYED, PLOTTED, GRADES CHECKED, B.M. NOTED, STRUCTURE NOTATIONS CHKD

PLOT DATE: 5/17/2021
PLOT SCALE: 1.480.0000 ' / ft.
FILE NAME: pw:\\cdotswshtc.cdottech.local:CDOTTech Projects\Documents\Projects\3133\CAD\Sheets\Water Main\sht-wm-009.dgn

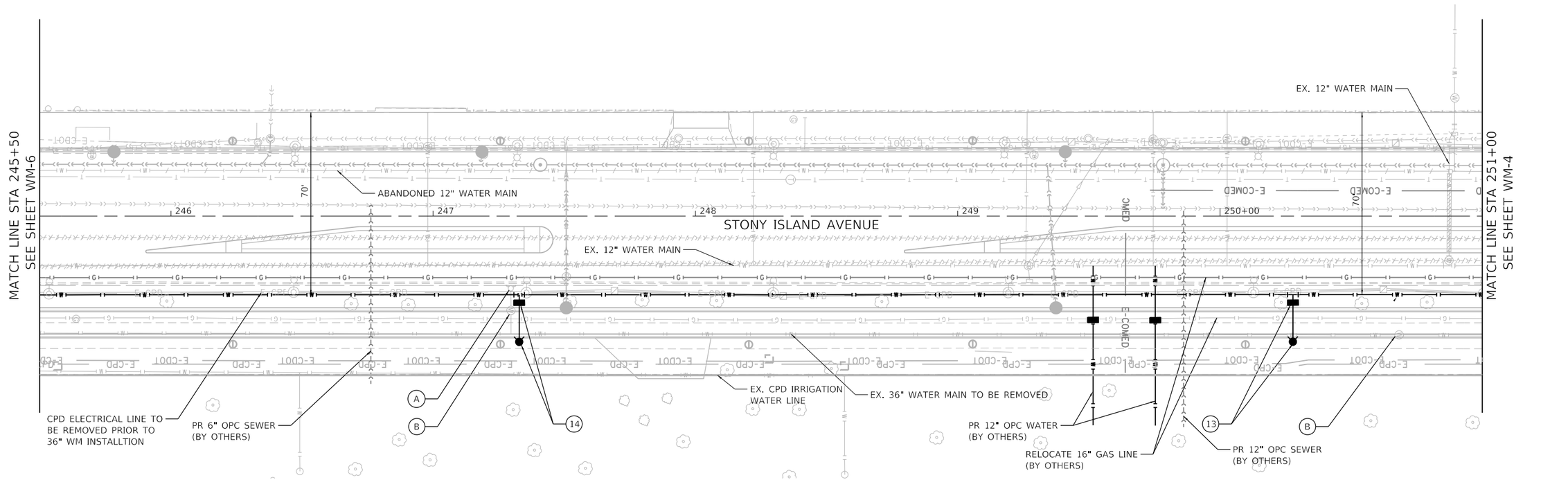


(A) REMOVE THE OLD FIRE HYDRANT AND DELIVER IT TO THE DISTRICT YARD. (1 FIRE HYDRANT)

(B) THE EXISTING VALVE BASIN IS TO BE REMOVED. DELIVER THE FRAME AND LID TO THE DISTRICT YARD. (2 VALVE BASINS)

FOR NOTE 11 SEE SHEET NO. WM-4

(12) NOTE REMOVED

(13) SET: 1-4½" FIRE HYDRANT AT 267' S.S.L. (2' BEHIND PROPOSED CURB)
1-8" MJ VALVE AT 267' S.S.L., 72' E.W.L.
(IMMEDIATELY ADJACENT TO WATER MAIN)
1-36"x8" 3BMJ TEE AT 267' S.S.L., 69' E.W.L.
1-8"x12" B+PEMJ OFFSET (IF REQUIRED)
18' OF 8" D.I.W.P.
FLANGE COLOR CODE: BLUE
THE FIRE HYDRANT MUST BE RESTRAINED.
CONSTRUCT ONE (1) VALVE BASIN.
INSTALL DRAIN TILE.

(14) SET: 1-4½" FIRE HYDRANT AT 215' N.N.L. (2' BEHIND PROPOSED CURB)
1-8" MJ VALVE AT 215' N.N.L., 73' E.W.L.
(IMMEDIATELY ADJACENT TO WATER MAIN)
1-36"x8" 3BMJ TEE AT 215' N.N.L., 69' E.W.L.
1-8"x12" B+PEMJ OFFSET (IF REQUIRED)
18' OF 8" D.I.W.P.
FLANGE COLOR CODE: BLUE
THE FIRE HYDRANT MUST BE RESTRAINED.
CONSTRUCT ONE (1) VALVE BASIN.
INSTALL DRAIN TILE.

FOR NOTE 15 SEE SHEET NO. WM-6

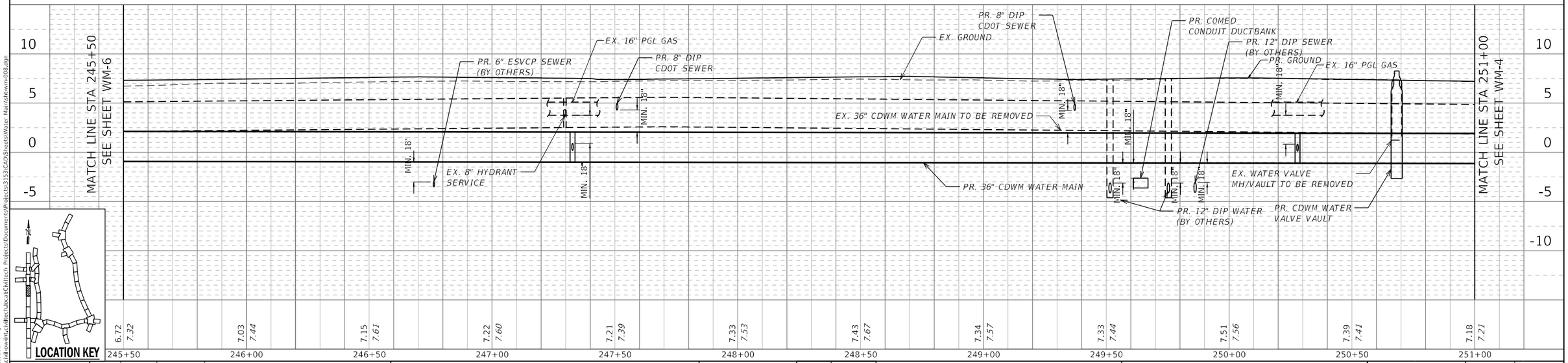


LOCATION KEY

| | | | | |
|---|---|---|---|---|
| DESIGN: CZ | | | SREV3 | |
| DRAWN: CZ | | | SREV2 | |
| CHECKED: DM | | | SREV1 | |
| APPROVED: | NO. | BY | DATE | DESCRIPTION |
| DATE: 03/29/2021 | REVISIONS | | | |

CHICAGO DEPARTMENT OF TRANSPORTATION

C★NECT

**WATER MAIN REPLACEMENT**
**PLAN AND PROFILE**
**S. STONY ISLAND AVE.**

**JACKSON PARK MOBILITY IMPROVEMENTS**

STA. 245+50 TO STA. 251+00

| | |
|---|---|
| CONTRACT NO. - | TOTAL SHEETS 1434 / SHEET NO. 664 |
| PROJECT NO. B-7-203 | DRAWING NO. WM-5 |
| SCALE: 1"=20' | |

PLOT DATE= 5/17/2021
PLOT SCALE= 480.0000 ' / ft.
FILE NAME: pw:\\cbd-pwint.civiltech.local:CivilTech Projects\Documents\Projects\3133\CAD\Sheets\Water Main\sht-wm-008.dgn

PLAN: SURVEYED / PLOTTED / ALIGNMENT CHECKED / R/T. OF WAY CHECKED / CADD FILE NAME / NOTE BOOK / NO. / BY / DATE

PROFILE: SURVEYED / PLOTTED / GRADES CHECKED / B/A. NOTED / STRUCTURE NOTATIONS CHKD / NOTE BOOK / NO. / BY / DATE

PLAN
SURVEYED
PLOTTED
ALIGNMENT CHECKED
RT. OF WAY CHECKED
CADD FILE NAME
NOTE BOOK
NO.
BY
DATE

20 0 20 40
SCALE IN FEET

MATCH LINE STA 240+00
SEE SHEET WM-7

MATCH LINE STA 245+50
SEE SHEET WM-5

E 62ND ST

E 61ST ST

STONY ISLAND AVENUE

240+00 241 242 243 244 245+00

70' 70'

EX. 8" WATER MAIN

EX. 8" WATER MAIN

ABANDONED 12" WATER MAIN

RELOCATE 16" GAS LINE (BY OTHERS)

EX. 12" WATER MAIN

EX. 1½" CPD IRRIGATION WATER LINE

RELOCATE 16" GAS LINE (BY OTHERS)

PR. 12" CPD SAN. (BY OTHERS)

PR. 6" OPC SAN. (BY OTHERS)

PR. 8" OPC WATER (BY OTHERS)

EX. 36" WATER MAIN TO BE REMOVED

EX. 2" CPD IRRIGATION WATER LINE

REMOVE AND REPLACE
EXISTING SEWER PRIOR
TO 36" WM INSTALLATION

FOR NOTE 14 SEE SHEET NO. WM-5

15 SET: 1-4½" FIRE HYDRANT AT 4' N.N.L., (4.5' BEHIND PROPOSED CURB)
1-8" MJ VALVE AT 4' N.N.L., 73' E.W.L.
(IMMEDIATELY ADJACENT TO WATER MAIN)
1-36"x8" 3BMJ TEE AT 4' N.N.L., 70' E.W.L.
16' OF 8" D.I.W.P.
FLANGE COLOR CODE: BLUE
THE FIRE HYDRANT MUST BE RESTRAINED.
CONSTRUCT ONE (1) VALVE BASIN.
INSTALL DRAIN TILE.

16 SET: 1-4½" FIRE HYDRANT AT 22' N.N.L., (4.5' BEHIND PROPOSED CURB)
1-8" MJ VALVE AT 22' N.N.L., 73' E.W.L.
(IMMEDIATELY ADJACENT TO WATER MAIN)
1-36"x8" 3BMJ TEE AT 22' N.N.L., 70' E.W.L.
18' OF 8" D.I.W.P.
FLANGE COLOR CODE: BLUE
THE FIRE HYDRANT MUST BE RESTRAINED.
CONSTRUCT ONE (1) VALVE BASIN.
INSTALL DRAIN TILE.

FOR NOTE 17 SEE SHEET NO. WM-7

PROFILE
SURVEYED
PLOTTED
ALIGNMENT CHECKED
B.M. NOTED
STRUCTURE NOTATNS CHKD
NOTE BOOK
NO.
BY
DATE

10
5
0
-5

MATCH LINE STA 240+00
SEE SHEET WM-7

MATCH LINE STA 245+50
SEE SHEET WM-5

PR. 3(3") CDOT ELE. CONDUIT

PR. 8" DIP
CDOT SEWER

EX. 4" PGL GAS

EX. GROUND

EX. 16" PGL GAS

PR. 8" DIP
CDOT SEWER

PR. GROUND

PR. 8" DIP
CDOT SEWER

EX. 16" PGL GAS

MIN. 18"

EX. 36" CDWM WATER MAIN TO BE REMOVED

PR. CPD 12" SAN.
(BY OTHERS)

10" CLAY PARK DISTRICT
COMBINED SEWER TO BE REMOVED
PRIOR TO INSTALLATION OF
36" WATER MAIN
(INV. UNKNOWN)

PR. 6" ESVCP SEWER
(BY OTHERS)

PR. 8" DIP WATER
(BY OTHERS)

PR. 36" CDWM WATER MAIN

EX. 12" PARK DISTRICT
SAN. SEWER
(INV. AT MH ON E.)

6.91 7.44 | 6.94 7.24 | 6.89 7.21 | 6.98 7.35 | 6.95 7.36 | 6.84 7.17 | 6.74 6.99 | 6.81 7.10 | 7.03 7.26 | 6.90 7.45 | 6.67 7.54 | 6.72 7.32

240+00 240+50 241+00 241+50 242+00 242+50 243+00 243+50 244+00 244+50 245+00 245+50

LOCATION KEY

| | | | | | |
|---|---|---|---|---|---|
| DESIGN: CZ | | | ŞREV3 | | |
| DRAWN: CZ | | | ŞREV2 | | |
| CHECKED: DM | | | ŞREV1 | | |
| APPROVED: | NO. | BY | DATE | DESCRIPTION | |
| DATE: 03/29/2021 | REVISIONS | | | | |

CDOT CHICAGO DEPARTMENT OF TRANSPORTATION

C*NECT

WATER MAIN REPLACEMENT
PLAN AND PROFILE
S. STONY ISLAND AVE.

JACKSON PARK MOBILITY IMPROVEMENTS

STA. 240+00 TO STA. 245+50

| | |
|---|---|
| CONTRACT NO. - | TOTAL SHEETS 1434 |
| PROJECT NO. B-7-203 | SHEET NO. 665 |
| SCALE: 1"=20' | DRAWING NO. WM-6 |

PLOT DATE: 5/17/2021
PLOT SCALE: 480.0000 ' / ft.
FILE NAME: pw:\\kiwi\sswint.civiltech.local\CivilTech Projects\Documents\Projects\3133\CAD\Sheets\Water Main\sht-wm-007.dgn

20 0 20 40
SCALE IN FEET

MATCH LINE STA 234+50
SEE SHEET WM-8

MATCH LINE STA 240+00
SEE SHEET WM-6

STONY ISLAND AVENUE

73'
70'
69'
58'

235+00 236 237 238 239

ABANDONED 12" WATER MAIN

EX. 12" WATER MAIN

19

INSTALL 47' OF 36" R.J.D.I.W.P.

INSTALL 47' OF 36" R.J.D.I.W.P.

INSTALL 6' OF 36" R.J.D.I.W.P.

RELOCATE 16" GAS LINE AND VALVE (BY OTHERS)

RELOCATE 16" GAS LINE (BY OTHERS)

18

FIRE HYDRANT TO BE REMOVED BY DWM AFTER THE NEWELY INSTALLED 36" WATER MAIN IS APPROVED FOR SERVICE BY THE DWM

EX. 2" CPD IRRIGATION WATER LINE

EX. 36" WATER MAIN TO BE REMOVED

RELOCATE 16" GAS LINE (BY OTHERS)

17

PR. CPD WATER SERVICE & CONNECTION (BY OTHERS) COORDINATE WITH DWM AND CPD

A

B

FOR NOTE 16 SEE SHEET NO. WM-6

17 SET: 1-4½" FIRE HYDRANT AT 221' S.S.L., (2' BEHIND PROPOSED CURB)
1-8" MJ VALVE AT 221' S.S.L., 73' E.W.L.
(IMMEDIATELY ADJACENT TO WATER MAIN)
1-36"x8" 3BMJ TEE AT 221' S.S.L., 69' E.W.L.
1-8"x12" B+PEMJ OFFSET (IF REQUIRED)
16' OF 8" D.I.W.P.
FLANGE COLOR CODE: BLUE
THE FIRE HYDRANT MUST BE RESTRAINED.
CONSTRUCT ONE (1) VALVE BASIN.
INSTALL DRAIN TILE.

18 SET: 1-4½" FIRE HYDRANT AT 230' N.N.L., (2' BEHIND PROPOSED CURB)
1-8" MJ VALVE AT 230' N.N.L., 73' E.W.L.
(IMMEDIATELY ADJACENT TO WATER MAIN)
1-36"x8" 3BMJ TEE AT 230' N.N.L., 69' E.W.L.
1-8"x12" B+PEMJ OFFSET (IF REQUIRED)
16' OF 8" D.I.W.P.
FLANGE COLOR CODE: BLUE
THE FIRE HYDRANT MUST BE RESTRAINED.
CONSTRUCT ONE (1) VALVE BASIN.
INSTALL DRAIN TILE.

19 CHANGE LINE OF PIPE FROM 69' E.W.L. TO 73' E.W.L.
WITH:2-36"x$\frac{1}{16}$ 2BMJ BENDS

FOR NOTE 20 SEE SHEET NO. WM-8

A REMOVE THE OLD FIRE HYDRANT AND DELIVER IT TO THE DISTRICT YARD.
(1 FIRE HYDRANT)

B THE EXISTING VALVE BASIN IS TO BE REMOVED.
DELIVER THE FRAME AND LID TO THE DISTRICT YARD.
(1 VALVE BASIN)

PLAN
SURVEYED
PLOTTED
ALIGNMENT CHECKED
R.O.W. CHECKED
B.M. NOTED
STRUCTURE NOTATNS CHKD
CADD FILE NAME
NOTE BOOK
NO.
BY
DATE

PROFILE
SURVEYED
PLOTTED
CROSS SECTIONS CHECKED
B.M. NOTED
STRUCTURE NOTATNS CHKD
CADD FILE NAME: pw:\cloud-nsw-int.cuitech.local\Cuitech Projects\Documents\Projects\3133\CAD\Sheets\Water Main\SH-wm-006.dgn
NOTE BOOK
NO.
BY
DATE

MATCH LINE STA 234+50
SEE SHEET WM-8

MATCH LINE STA 240+00
SEE SHEET WM-6

10
5
0
-5
-10

HORIZONTAL BEND

HORIZONTAL BEND

EX. 16" PGL GAS

EX. 16" PGL GAS

PR. 8" DIP CDOT SEWER

MIN. 18"

EX. GROUND

PR. GROUND

MIN. 18"

EX. 16" PGL GAS

PR. 8" DIP CDOT SEWER

EX. 36" CDWM WATER MAIN TO BE REMOVED

PR. 36" CDWM WATER MAIN

EX. 8" HYDRANT LEAD

PR. 12" CPD WATER SERVICE (BY OHTERS)

| | 234+50 | 235+00 | 235+50 | 236+00 | 236+50 | 237+00 | 237+50 | 238+00 | 238+50 | 239+00 | 239+50 | 240+00 |
|---|---|---|---|---|---|---|---|---|---|---|---|---|
| | 7.49 | 7.60 | 6.71 | 6.88 | 7.03 | 6.88 | 7.10 | 7.03 | 7.07 | 7.08 | 7.06 | 6.91 |
| | 7.59 | 7.42 | 7.39 | 7.25 | 7.19 | 7.29 | 7.53 | 7.71 | 7.36 | 7.33 | 7.46 | 7.44 |

LOCATION KEY

| | | | | |
|---|---|---|---|---|
| DESIGN: CZ | | | $REV3 | |
| DRAWN: CZ | | | $REV2 | |
| CHECKED: DM | | | $REV1 | |
| APPROVED: | NO. | BY | DATE | DESCRIPTION |
| DATE: 03/29/2021 | REVISIONS | | | |

CDOT CHICAGO DEPARTMENT OF TRANSPORTATION

C^NECT

WATER MAIN REPLACEMENT
PLAN AND PROFILE
S. STONY ISLAND AVE.

JACKSON PARK MOBILITY IMPROVEMENTS

STA. 234+50 TO STA. 240+00

CONTRACT NO. -
PROJECT NO. B-7-203
SCALE: 1"=20'

TOTAL SHEETS 1434
SHEET NO. 666
DRAWING NO. WM-7

PLOT DATE: 5/17/2021
PLOT SCALE: 480.0000 ' / ft.
FILE NAME: pw:\cloud-nsw-int.cuitech.local\Cuitech Projects\Documents\Projects\3133\CAD\Sheets\Water Main\SH-wm-006.dgn

PLAN
SURVEYED
PLOTTED
ALIGNMENT CHECKED
RT. OF WAY CHECKED
CADD FILE NAME
NOTE BOOK
NO.
BY
DATE

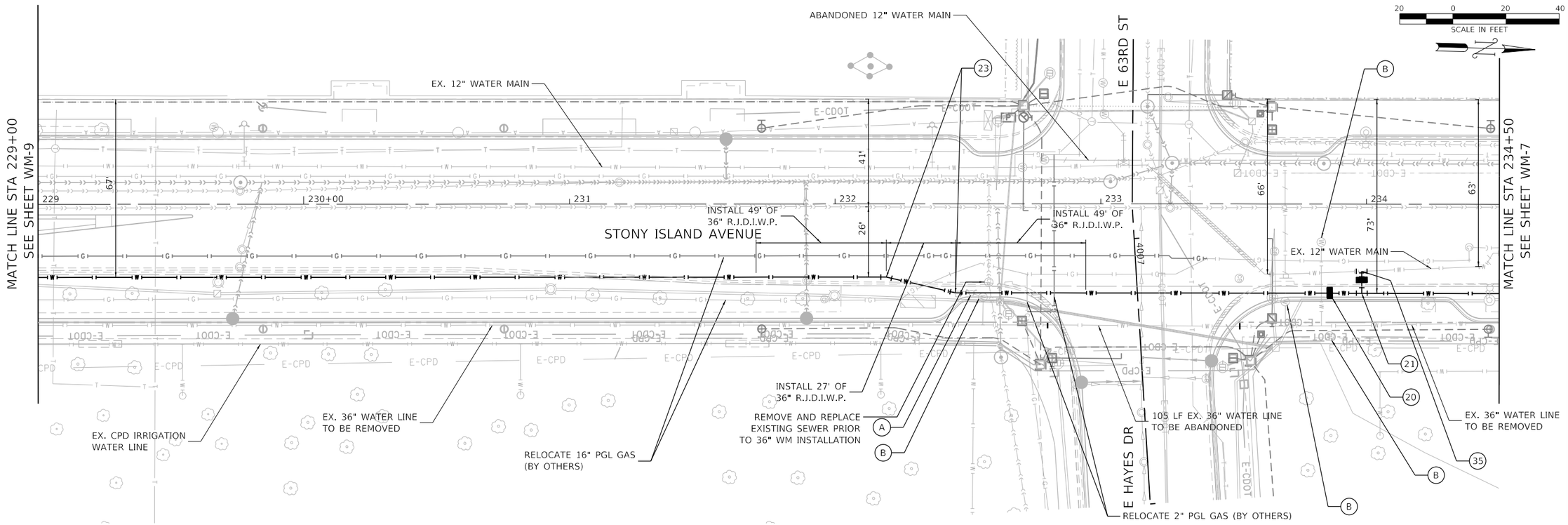


FOR NOTE 19 SEE SHEET NO. WM-7

(20) INSTALL 36" BUTTERFLY VALVE IN BASIN 5'-DIAMETER. CLOSED LID

(21) SET: 1-36"x12" 3BMJ TEE AT 51' N.N.L., 73' E.W.L.
1-12" MJ VALVE AT 51' N.N.L., 68' E.W.L.
2-12" ⅛ BENDS AT 51' N.N.L., 70' & 72' E.W.L.
8' OF 12" D.I.W.P.
TEMPORARILY PLUG AND BRACE THE VALVE.
INSTALL ONE (1) VALVE BASIN.

(22) NOTE REMOVED

(23) CHANGE LINE OF PIPE FROM 73' E.W.L. TO 67' E.W.L.
WITH:2-36" x 1/16 2BMJ BENDS

FOR NOTE 24 SEE SHEET NO. WM-9
FOR NOTE 34 SEE SHEET NO. WM-4

(35) AFTER THE NEWLY INSTALLED 36" WATER MAIN IS APPROVED FOR SERVICE BY THE D.W.M., REMOVE THE TEMPORARY PLUGS OF NOTE 21 AND CONNECT THE NEW 12" WATER MAIN TO THE EXISTING 12" D.I. WATER MAIN WITH A 1-12"x12" 3BMJ TEE AT 51' N.N.L., 65' E.W.L.
WITH: 8' OF 12" D.I.W.P.

FOR NOTE 36 SEE SHEET NO. WM-12.

(A) REMOVE THE OLD FIRE HYDRANT AND DELIVER IT TO THE DISTRICT YARD. (1 FIRE HYDRANT)

(B) THE EXISTING VALVE BASIN IS TO BE REMOVED. DELIVER THE FRAME AND LID TO THE DISTRICT YARD. (4 VALVE BASINS)

PROFILE
SURVEYED
PLOTTED
CROSS SECTIONS CHECKED
B.M. NOTED
STRUCTURE NOTATIONS CHKD
NOTE BOOK
NO.
BY
DATE

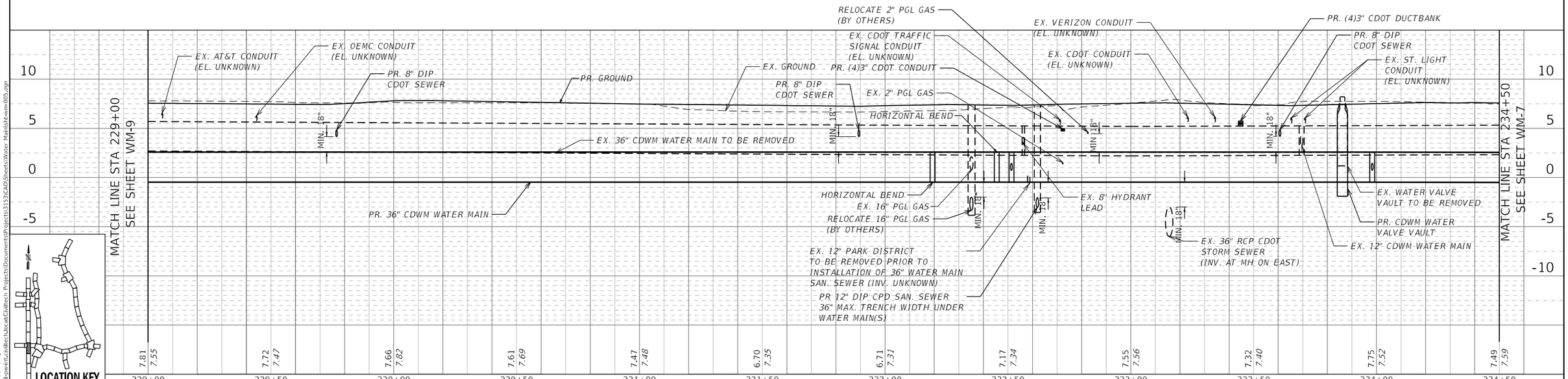


LOCATION KEY

| | | | | |
|---|---|---|---|---|
| DESIGN: CZ | | | $REV3 | |
| DRAWN: CZ | | | $REV2 | |
| CHECKED: DM | | | $REV1 | |
| APPROVED: | NO. | BY | DATE | DESCRIPTION |
| DATE: 03/29/2021 | REVISIONS | | | |

CDOT CHICAGO DEPARTMENT OF TRANSPORTATION

C*NECT

WATER MAIN REPLACEMENT
PLAN AND PROFILE
S. STONY ISLAND AVE.

JACKSON PARK MOBILITY IMPROVEMENTS

STA. 229+00 TO STA. 234+50

| CONTRACT NO. | TOTAL SHEETS | SHEET NO. |
|---|---|---|
| - | 1434 | 667 |
| PROJECT NO. B-7-203 | DRAWING NO. WM-8 | |
| SCALE: 1"=20' | | |

PLOT DATE: 5/17/2021
PLOT SCALE: 480.0000 ' / ft.
FILE NAME: pw:\\cdotpwint.cdot.illinois.gov:Documents\Projects\3133\CAD\Sheets\Water Main\SH-wm-005.dgn

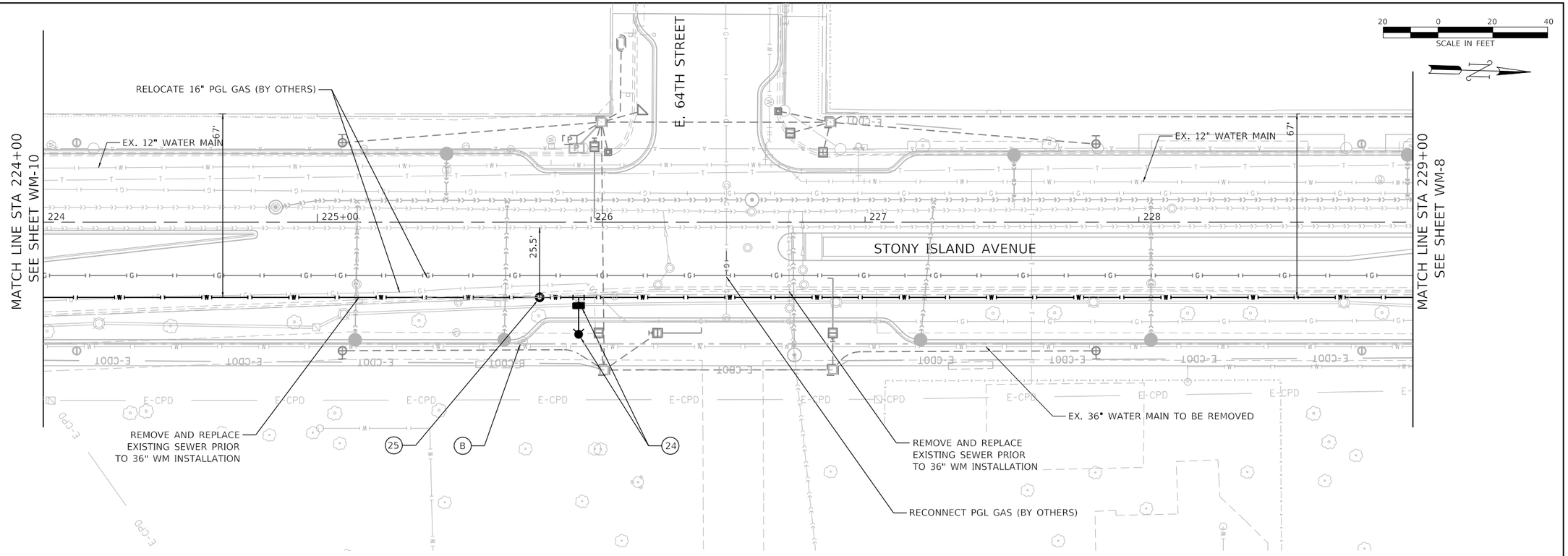


FOR NOTE 23 SEE SHEET NO. WM-8

24
SET: 1-4½" FIRE HYDRANT AT 9' S.S.L., (5' BEHIND PROPOSED CURB)
1-8" MJ VALVE AT 9' S.S.L., 70' E.W.L.
(IMMEDIATELY ADJACENT TO WATER MAIN)
1-36"x8" 3BMJ TEE AT 9' S.S.L., 67' E.W.L.
1-8"x12" B+PEMJ OFFSET (IF REQUIRED)
14' OF 8" D.I.W.P.
FLANGE COLOR CODE: BLUE
THE FIRE HYDRANT MUST BE RESTRAINED.
CONSTRUCT ONE (1) VALVE BASIN.
INSTALL DRAIN TILE.

25
INSTALL PITO TAP
IN BASIN AT 25' SSL, 67' EWL

FOR NOTE 26 SEE SHEET NO. WM-10

B
THE EXISTING VALVE BASIN IS TO BE REMOVED.
DELIVER THE FRAME AND LID TO THE DISTRICT YARD.
(1 VALVE BASINS)

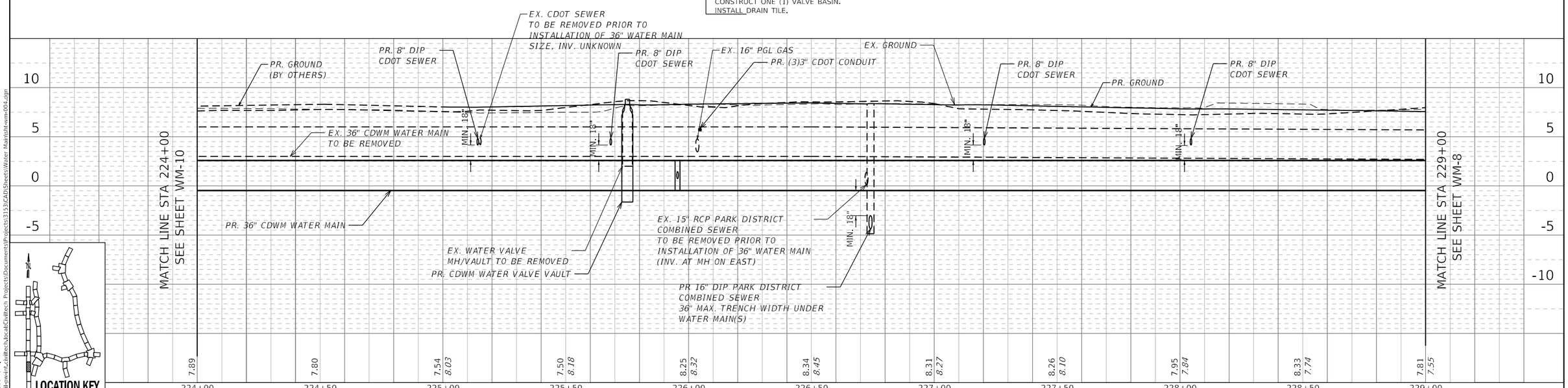





PLAN
NOTE BOOK NO.
SURVEYED
PLOTTED
ALIGNMENT CHECKED
RT. OF WAY CHECKED
CADD FILE NAME
BY
DATE

PROFILE
NOTE BOOK NO.
SURVEYED
PLOTTED
GRADES CHECKED
B.M. NOTED
STRUCTURE NOTATNS CHKD
BY
DATE

PLOT DATE: 5/17/2021
PLOT SCALE: 480.0000 ' / ft.
FILE NAME: pw:\\civil-pw-int.civiltech.local:Civiltech Projects\Documents\Projects\3153\CAD\Sheets\Water Main\sht-wm-004.dgn

| | | | | |
|---|---|---|---|---|
| DESIGN: CZ | | | $REV3 | |
| DRAWN: CZ | | | $REV2 | |
| CHECKED: DM | | | $REV1 | |
| APPROVED: | NO. | BY | DATE | DESCRIPTION |
| DATE: 03/29/2021 | REVISIONS | | | |

CDOT CHICAGO DEPARTMENT OF TRANSPORTATION

C*NECT

WATER MAIN REPLACEMENT
PLAN AND PROFILE
S. STONY ISLAND AVE.

JACKSON PARK MOBILITY IMPROVEMENTS

STA. 224+00 TO STA. 229+00

CONTRACT NO. -
PROJECT NO. B-7-203
SCALE: 1"=20'

| TOTAL SHEETS | SHEET NO. |
|---|---|
| 1434 | 668 |

DRAWING NO. WM-9

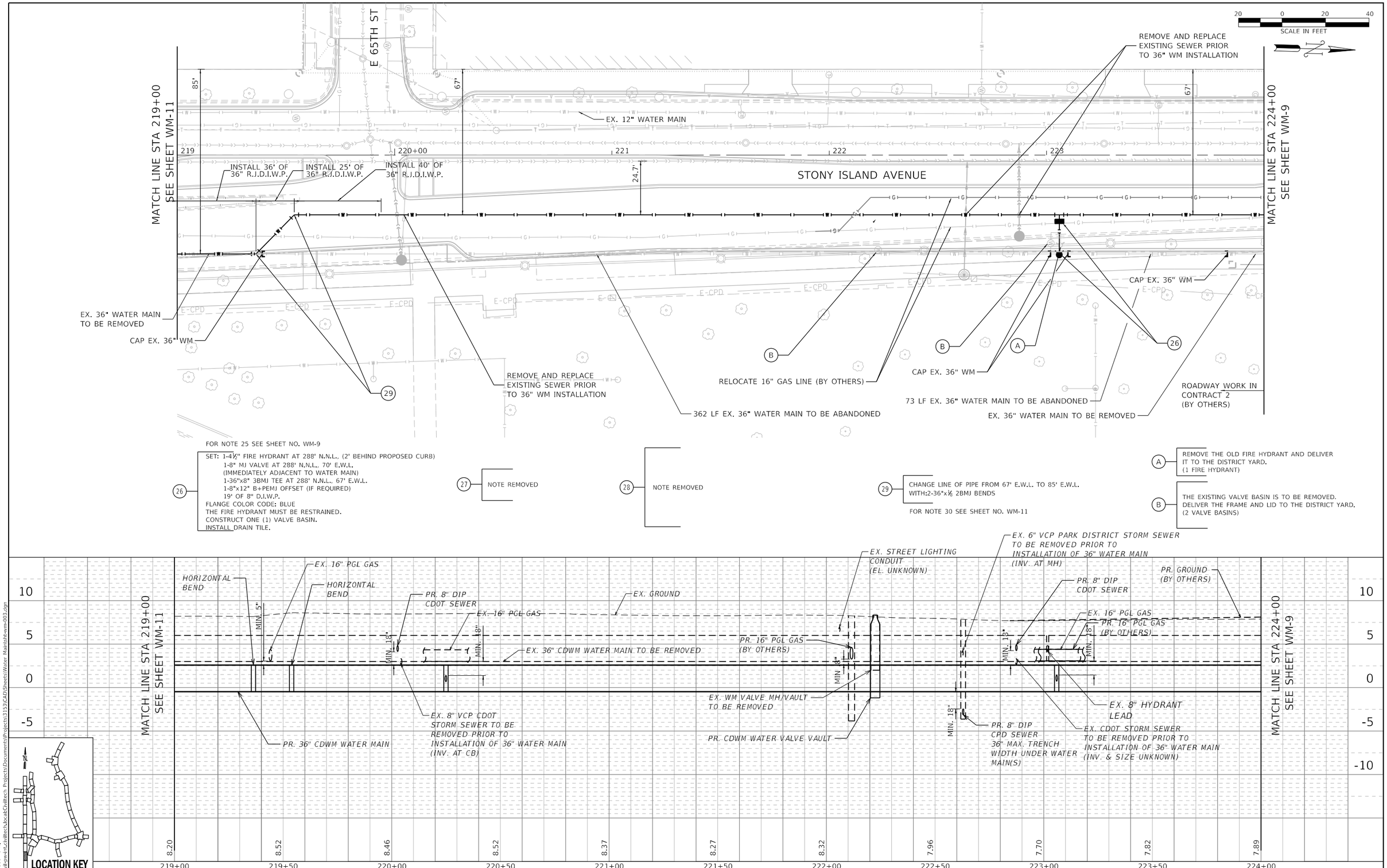


| | | | | |
|---|---|---|---|---|
| DESIGN: CZ | | | $REV3 | |
| DRAWN: CZ | | | $REV2 | |
| CHECKED: DM | | | $REV1 | |
| APPROVED: | NO. | BY | DATE | DESCRIPTION |
| DATE: 03/29/2021 | REVISIONS | | | |

CDOT CHICAGO DEPARTMENT OF TRANSPORTATION

C*NECT

**WATER MAIN REPLACEMENT PLAN AND PROFILE S. STONY ISLAND AVE.**

**JACKSON PARK MOBILITY IMPROVEMENTS**

STA. 219+00 TO STA. 224+00

| | | |
|---|---|---|
| CONTRACT NO. - | TOTAL SHEETS 1434 | SHEET NO. 669 |
| PROJECT NO. B-7-203 | DRAWING NO. WM-10 | |
| SCALE: 1"=20' | | |

PLAN: NOTE BOOK NO. ___ SURVEYED / PLOTTED / ALIGNMENT CHECKED / RT. OF WAY CHECKED / CADD FILE NAME ___ BY DATE

PROFILE: NOTE BOOK NO. ___ SURVEYED / PLOTTED / GRADES CHECKED / B.M. NOTED / STRUCTURE NOTATNS CHKD BY DATE

PLOT DATE: 5/17/2021
PLOT SCALE: 480.0000 ' / ft.
FILE NAME: pw:\\civil-pw-int.civiltech.local:Civiltech Projects\Documents\Projects\3153\CAD\Sheets\Water Main\sht-wm-003.dgn

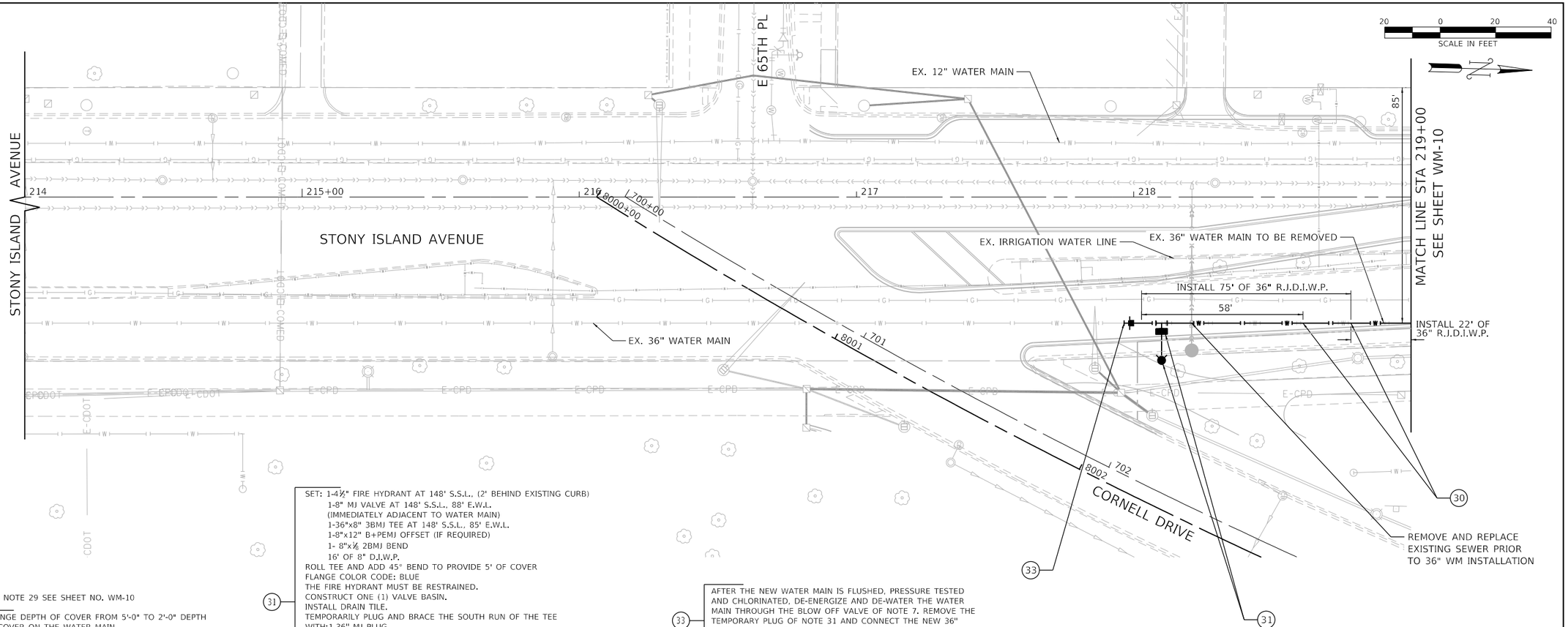


FOR NOTE 29 SEE SHEET NO. WM-10

30 CHANGE DEPTH OF COVER FROM 5'-0" TO 2'-0" DEPTH OF COVER ON THE WATER MAIN WITH:2-36"x1/32 2BMJ VERTICAL BENDS AT 64'&79' S.S.L., 85' E.W.L.

31 SET: 1-4½" FIRE HYDRANT AT 148' S.S.L., (2' BEHIND EXISTING CURB)
1-8" MJ VALVE AT 148' S.S.L., 88' E.W.L.
(IMMEDIATELY ADJACENT TO WATER MAIN)
1-36"x8" 3BMJ TEE AT 148' S.S.L., 85' E.W.L.
1-8"x12" B+PEMJ OFFSET (IF REQUIRED)
1- 8"x⅛ 2BMJ BEND
16' OF 8" D.I.W.P.
ROLL TEE AND ADD 45° BEND TO PROVIDE 5' OF COVER
FLANGE COLOR CODE: BLUE
THE FIRE HYDRANT MUST BE RESTRAINED.
CONSTRUCT ONE (1) VALVE BASIN.
INSTALL DRAIN TILE.
TEMPORARILY PLUG AND BRACE THE SOUTH RUN OF THE TEE WITH:1-36" MJ PLUG
CAP AND BRACE THE EXISTING 36" FEEDER MAIN TO THE SOUTH PER BRACING DETAIL WITH:1-36" MJ CAP
FLUSH AND PRESSURE TEST THE NEW 36" WATER MAIN TO THE SOUTH FROM THE VALVE OF NOTE 4 AT W. 59TH STREET TO THE FIRE HYDRANT OF NOTE 31.
FOR NOTE 32 SEE SHEET NO. WM-4

33 AFTER THE NEW WATER MAIN IS FLUSHED, PRESSURE TESTED AND CHLORINATED, DE-ENERGIZE AND DE-WATER THE WATER MAIN THROUGH THE BLOW OFF VALVE OF NOTE 7. REMOVE THE TEMPORARY PLUG OF NOTE 31 AND CONNECT THE NEW 36" FEEDER MAIN TO THE NEAREST EXISTING 36" FEEDER MAIN JOINT TO THE SOUTH WITH:1-36" TRANSITION SLEEVE (CUT TO FIT FILLER PIECE)

FOR NOTE 34 SEE SHEET NO. WM-2

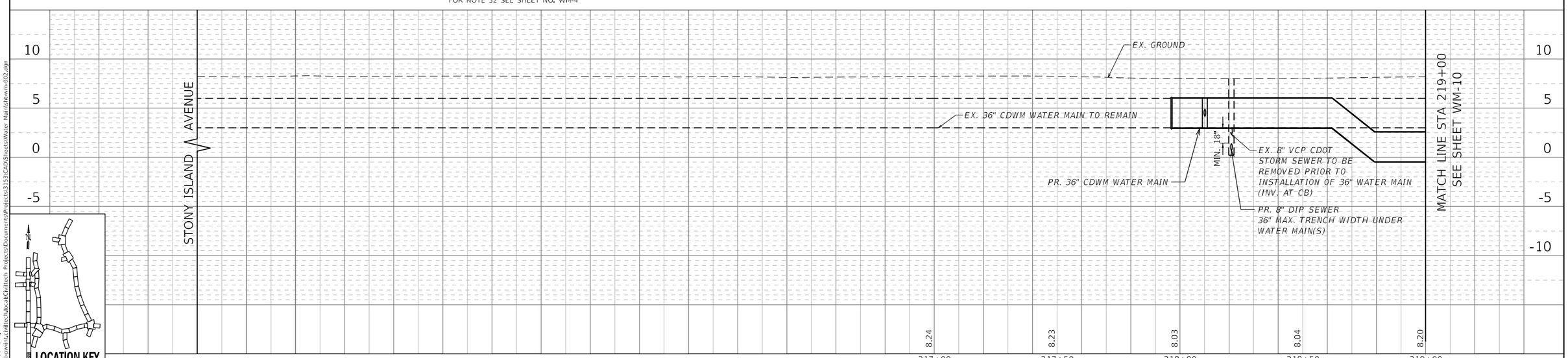





PLAN
NOTE BOOK NO.
SURVEYED
PLOTTED
ALIGNMENT CHECKED
RT. OF WAY CHECKED
CADD FILE NAME
BY
DATE

PROFILE
NOTE BOOK NO.
SURVEYED
PLOTTED
GRADES CHECKED
B.M. NOTED
STRUCTURE NOTATIONS CHKD
BY
DATE

PLOT DATE: 5/17/2021
PLOT SCALE: 480.0000 ' / ft.
FILE NAME: pw:\\civil-pw-int.civiltech.local:Civiltech Projects\Documents\Projects\3153\CAD\Sheets\Water Main\sht-wm-002.dgn

| | | | | |
|---|---|---|---|---|
| DESIGN: CZ | | | $REV3 | |
| DRAWN: CZ | | | $REV2 | |
| CHECKED: DM | | | $REV1 | |
| APPROVED: | NO. | BY | DATE | DESCRIPTION |
| DATE: 03/29/2021 | REVISIONS | | | |

CDOT CHICAGO DEPARTMENT OF TRANSPORTATION

C*NECT

WATER MAIN REPLACEMENT
PLAN AND PROFILE
S. STONY ISLAND AVE.

JACKSON PARK MOBILITY IMPROVEMENTS

STA. 214+00 TO STA. 219+00

CONTRACT NO. -
PROJECT NO. B-7-203
SCALE: 1"=20'

| TOTAL SHEETS | SHEET NO. |
|---|---|
| 1434 | 670 |

DRAWING NO. WM-11

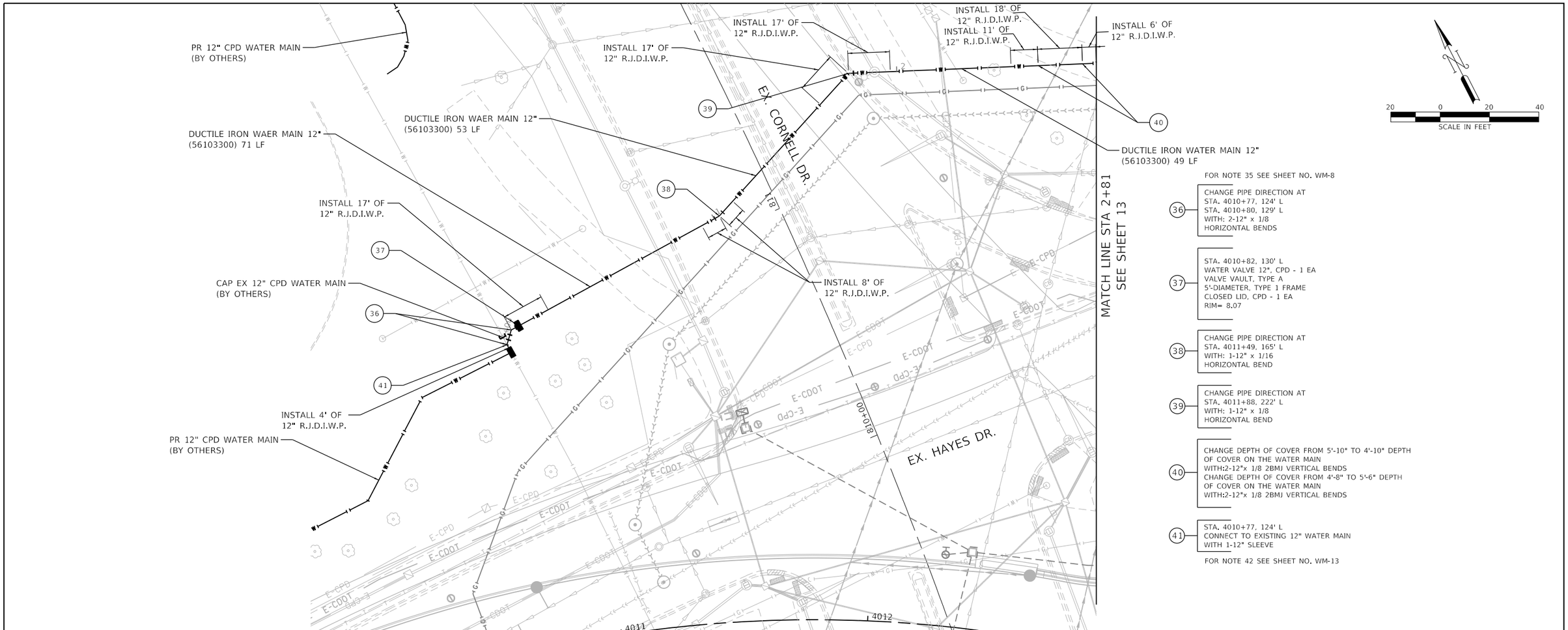


FOR NOTE 35 SEE SHEET NO. WM-8

36 — CHANGE PIPE DIRECTION AT STA. 4010+77, 124' L STA. 4010+80, 129' L WITH: 2-12" x 1/8 HORIZONTAL BENDS

37 — STA. 4010+82, 130' L WATER VALVE 12", CPD - 1 EA VALVE VAULT, TYPE A 5'-DIAMETER, TYPE 1 FRAME CLOSED LID, CPD - 1 EA RIM= 8.07

38 — CHANGE PIPE DIRECTION AT STA. 4011+49, 165' L WITH: 1-12" x 1/16 HORIZONTAL BEND

39 — CHANGE PIPE DIRECTION AT STA. 4011+88, 222' L WITH: 1-12" x 1/8 HORIZONTAL BEND

40 — CHANGE DEPTH OF COVER FROM 5'-10" TO 4'-10" DEPTH OF COVER ON THE WATER MAIN WITH:2-12"x 1/8 2BMJ VERTICAL BENDS CHANGE DEPTH OF COVER FROM 4'-8" TO 5'-6" DEPTH OF COVER ON THE WATER MAIN WITH:2-12"x 1/8 2BMJ VERTICAL BENDS

41 — STA. 4010+77, 124' L CONNECT TO EXISTING 12" WATER MAIN WITH 1-12" SLEEVE

FOR NOTE 42 SEE SHEET NO. WM-13

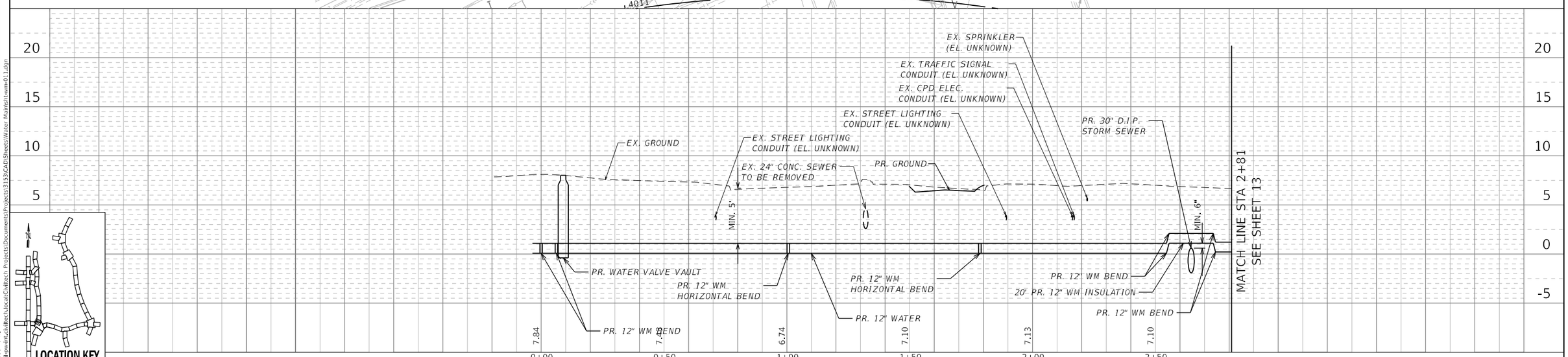





PLAN — NOTE BOOK NO. — SURVEYED / PLOTTED / ALIGNMENT CHECKED / RT. OF WAY CHECKED / CADD FILE NAME — BY — DATE

PROFILE — NOTE BOOK NO. — SURVEYED / PLOTTED / GRADES CHECKED / B.M. NOTED / STRUCTURE NOTATNS CHKD — BY — DATE

PLOT DATE: 5/17/2021
PLOT SCALE: 480.0000 ' / ft.
FILE NAME: pw:\\civil-pw-int.civiltech.local:Civiltech Projects\Documents\Projects\3153\CAD\Sheets\Water Main\sht-wm-011.dgn

| | | | | |
|---|---|---|---|---|
| DESIGN: CZ | | | $REV3 | |
| DRAWN: CZ | | | $REV2 | |
| CHECKED: DM | | | $REV1 | |
| APPROVED: | NO. | BY | DATE | DESCRIPTION |
| DATE: 01/22/2021 | REVISIONS | | | |

CDOT CHICAGO DEPARTMENT OF TRANSPORTATION

C*NECT

WATER MAIN REPLACEMENT
PLAN AND PROFILE
HAYES/CORNELL

JACKSON PARK MOBILITY IMPROVEMENTS

STA. 0+00 TO STA. 2+85

| | | |
|---|---|---|
| CONTRACT NO. - | TOTAL SHEETS 1434 | SHEET NO. 671 |
| PROJECT NO. B-7-203 | DRAWING NO. WM-12 | |
| SCALE: 1"=20' | | |

FOR NOTE 41 SEE SHEET NO. WM-12

42 CHANGE DEPTH OF COVER FROM 5'-4" TO 4'-9" DEPTH OF COVER ON THE WATER MAIN WITH:2-12"x 1/8 2BMJ VERTICAL BENDS
CHANGE DEPTH OF COVER FROM 4'-9" TO 5'-4" DEPTH OF COVER ON THE WATER MAIN WITH:2-12"x 1/8 2BMJ VERTICAL BENDS

43 CHANGE DEPTH OF COVER FROM 5'-6" TO 8'-4" DEPTH OF COVER ON THE WATER MAIN WITH:2-12"x 1/8 2BMJ VERTICAL BENDS

44 CHANGE PIPE DIRECTION AT STA. 5002+82, 64' L AND CHANGE DEPTH OF COVER FROM 8'-4" TO 5'-6" DEPTH WITH: 1-12" x 1/4 HORIZONTAL BEND

45 CHANGE PIPE DIRECTION AT STA. 5002+51, 62' R STA. 5002+61, 73' R WITH: 2-12" x 1/8 HORIZONTAL BENDS

46 STA. 5002+55, 67' R WATER VALVE 12", CPD - 1 EA VALVE VAULT, TYPE A, 5'-DIAMETER, TYPE 1 FRAME, CLOSED LID, CPD - 1 EA RIM= 7.91

47 STA. 5002+10, 66' R CAP EX. 12" WATER MAIN

48 STA. 5001+87, 62' R CAP EX. 12" WATER MAIN

49 CONNECT TO EXISTING 12" WATER MAIN

FOR NOTE 50 SEE SHEET NO. WM-14

PLAN: SURVEYED, PLOTTED, ALIGNMENT CHECKED, R/T. OF WAY CHECKED, CADD FILE NAME, NOTE BOOK, NO., BY, DATE

PROFILE: SURVEYED, PLOTTED, GRADES CHECKED, B.M. NOTED, STRUCTURE NOTATIONS CHKD, NOTE BOOK, NO., BY, DATE

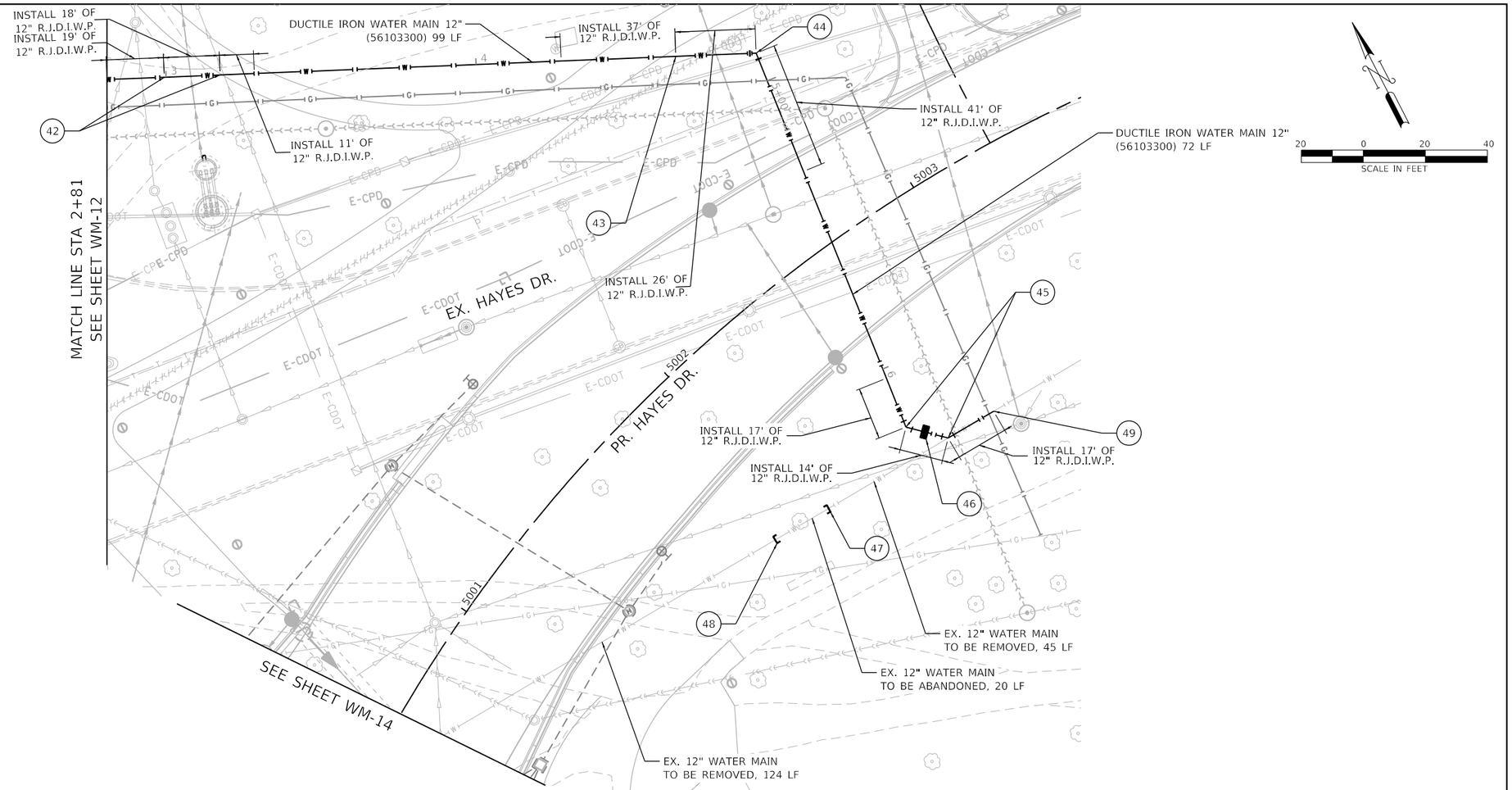


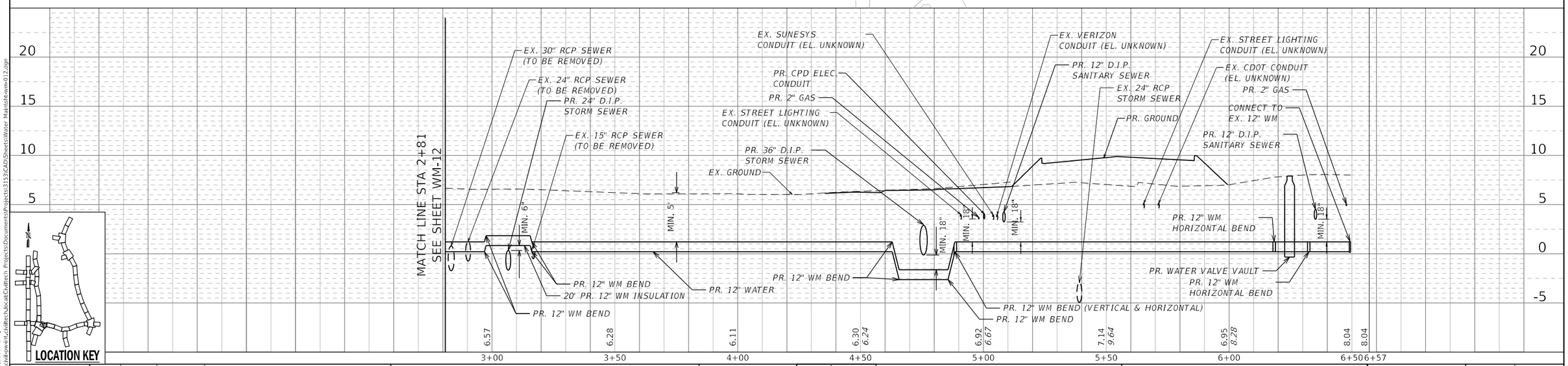


LOCATION KEY

| | | | | |
|---|---|---|---|---|
| DESIGN: CZ | | | $REV3 | |
| DRAWN: CZ | | | $REV2 | |
| CHECKED: DM | | | $REV1 | |
| APPROVED: | NO. | BY | DATE | DESCRIPTION |
| DATE: 01/22/2021 | REVISIONS | | | |

CDOT CHICAGO DEPARTMENT OF TRANSPORTATION

C*NECT

WATER MAIN REPLACEMENT
PLAN AND PROFILE
HAYES/CORNELL

JACKSON PARK MOBILITY IMPROVEMENTS

STA. TO STA.

| | |
|---|---|
| CONTRACT NO. - | TOTAL SHEETS 1434 / SHEET NO. 672 |
| PROJECT NO. B-7-203 | DRAWING NO. WM-13 |
| SCALE: 1"=20' | |

PLOT DATE: 5/17/2021
PLOT SCALE: 1.480.0000 ' / 1"
FILE NAME: pw:\\cwiaw-int.civiltech.local:CivilTech Projects\Documents\Projects\3153\CAD\Sheets\Water Main\sht-wm-012.dgn

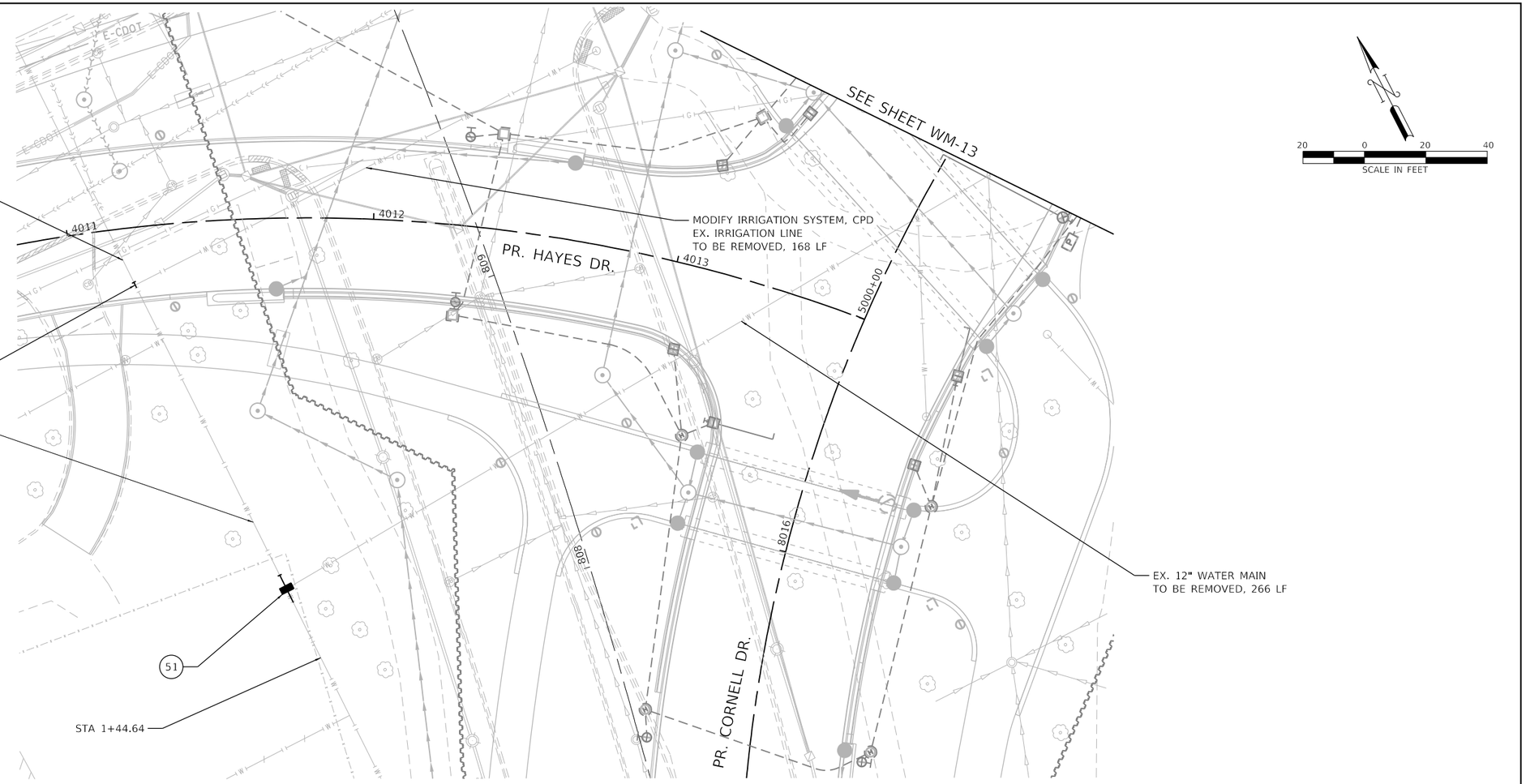


FOR NOTE 49 SEE SHEET NO. WM-13

50 STA. 4011+20, 19' R
MODIFY IRRIGATION SYSTEM, CPD
REMOVE EX. TEE
RECONNECT PIPE

51 STA. 4011+70, 121' R
REMOVE EX. 12"X12" TEE
RECONNECT PIPE
INSTALL WATER VALVES 12", CPD - 1 EA
VALVE VAULT, TYPE A
5'-DIAMETER, TYPE 1 FRAME
CLOSED LID, CPD - 1 EA
RIM=8.23

FOR NOTE 52 SEE SHEET NO. WM-15

NOTE:

CONTRACTOR SHALL COORDINATE WITH CPD FOR INSPECTION OF THE 12" POTABLE WATER LINE PRIOR TO BACKFILLING THE EXCAVATION AND CAPPING THE WATER LINE TO DETERMINE IF CPD DESIRES TO PERFORM MAINTENANCE ON THE POTABLE WATER LINE PRIOR TO RESTORATION.

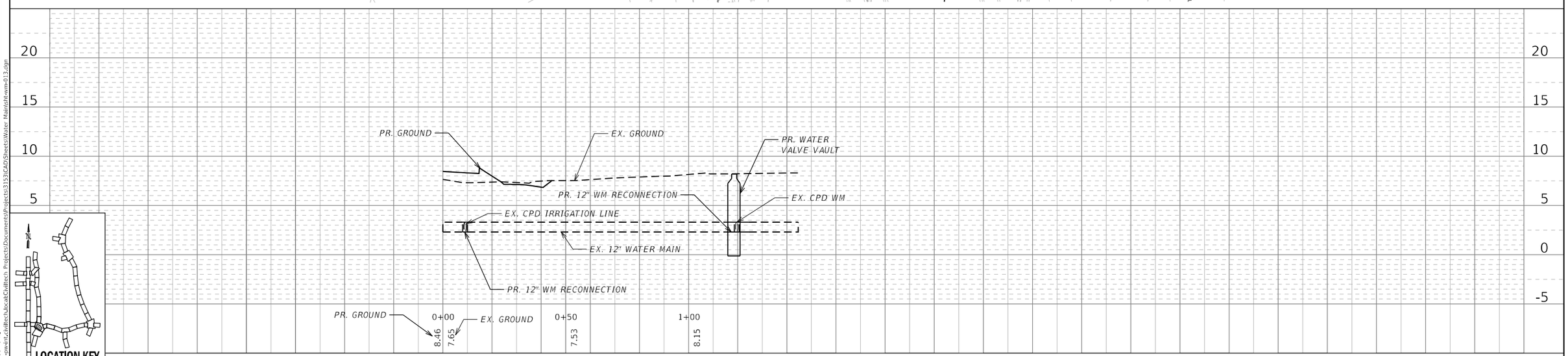





PLAN
NOTE BOOK NO.
SURVEYED
PLOTTED
ALIGNMENT CHECKED
RT. OF WAY CHECKED
CADD FILE NAME
BY
DATE

PROFILE
NOTE BOOK NO.
SURVEYED
PLOTTED
GRADES CHECKED
B.M. NOTED
STRUCTURE NOTATNS CHKD
BY
DATE

PLOT DATE: 5/17/2021
PLOT SCALE: 480.0000 ' / ft.
FILE NAME: pw:\\civil-pw-int.civiltech.local:Civiltech Projects\Documents\Projects\3153\CAD\Sheets\Water Main\sht-wm-013.dgn

| | | | | |
|---|---|---|---|---|
| DESIGN: CZ | | | $REV3 | |
| DRAWN: CZ | | | $REV2 | |
| CHECKED: DM | | | $REV1 | |
| APPROVED: | NO. | BY | DATE | DESCRIPTION |
| DATE: 01/22/2021 | REVISIONS | | | |

CDOT CHICAGO DEPARTMENT OF TRANSPORTATION

C*NECT

WATER MAIN REPLACEMENT
PLAN AND PROFILE
HAYES/CORNELL

JACKSON PARK MOBILITY IMPROVEMENTS

STA. TO STA.

CONTRACT NO. -
PROJECT NO. B-7-203
SCALE: 1"=20'

| TOTAL SHEETS | SHEET NO. |
|---|---|
| 1434 | 673 |

DRAWING NO. WM-14

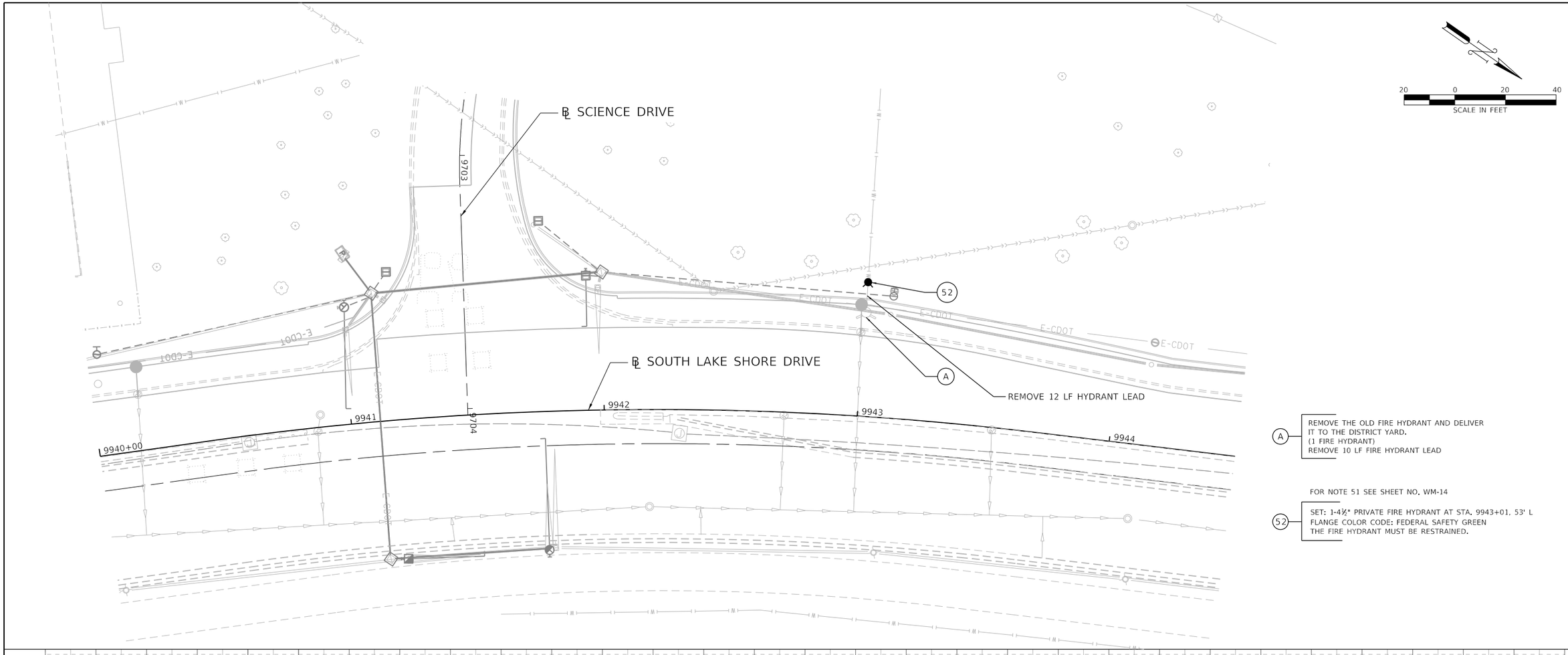


A — REMOVE THE OLD FIRE HYDRANT AND DELIVER IT TO THE DISTRICT YARD.
(1 FIRE HYDRANT)
REMOVE 10 LF FIRE HYDRANT LEAD

FOR NOTE 51 SEE SHEET NO. WM-14

52 — SET: 1-4½" PRIVATE FIRE HYDRANT AT STA. 9943+01, 53' L
FLANGE COLOR CODE: FEDERAL SAFETY GREEN
THE FIRE HYDRANT MUST BE RESTRAINED.

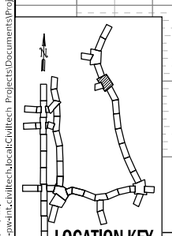


LOCATION KEY

PLAN
NOTE BOOK NO.
SURVEYED
PLOTTED
ALIGNMENT CHECKED
RT. OF WAY CHECKED
CADD FILE NAME
BY
DATE

PROFILE
NOTE BOOK NO.
SURVEYED
PLOTTED
GRADES CHECKED
B.M. NOTED
STRUCTURE NOTATNS CH'KD
BY
DATE

PLOT DATE: 5/17/2021
PLOT SCALE: 40.0000 ' / in.
FILE NAME: pw:\\civil-pw-int.civiltech.local:Civiltech Projects\Documents\Projects\3153\CAD\Sheets\Water Main\sht-wm-015.dgn

| | | | | |
|---|---|---|---|---|
| DESIGN: CZ | | | $REV3 | |
| DRAWN: CZ | | | $REV2 | |
| CHECKED: DM | | | $REV1 | |
| APPROVED: | NO. | BY | DATE | DESCRIPTION |
| DATE: 01/22/2021 | REVISIONS | | | |

CDOT CHICAGO DEPARTMENT OF TRANSPORTATION

C*NECT

WATER MAIN REPLACEMENT
PLAN AND PROFILE
S. LAKE SHORE DR.

JACKSON PARK MOBILITY IMPROVEMENTS

STA. TO STA.

| | | |
|---|---|---|
| CONTRACT NO. - | TOTAL SHEETS 1434 | SHEET NO. 674 |
| PROJECT NO. B-7-203 | DRAWING NO. WM-15 | |
| SCALE: 1"=20' | | |

REV:06.07

## LEGEND - SYMBOLS

### EXISTING WATER SYMBOLS

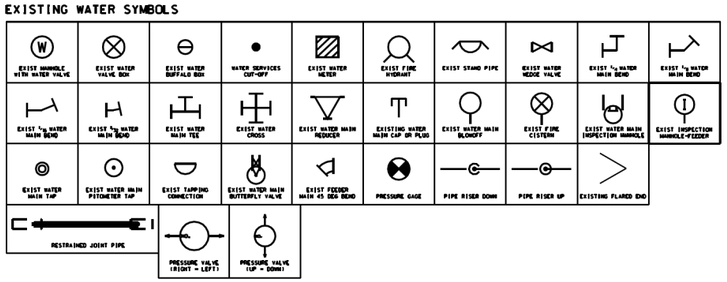


### PROPOSED WATER SYMBOLS

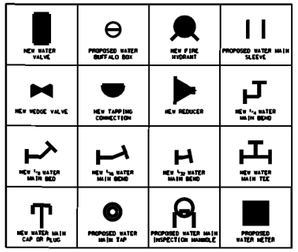


### SEWER SYMBOLS

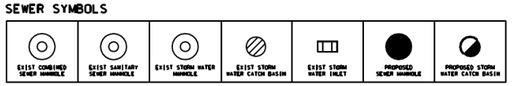


### GAS SYMBOLS

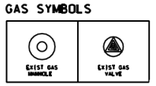


### CABLE T.V. SYMBOLS

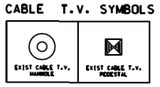


### SURVEY SYMBOLS

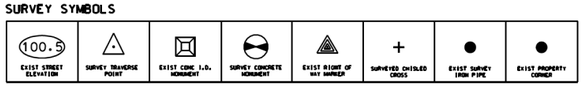


### ELECTRICAL SYMBOLS

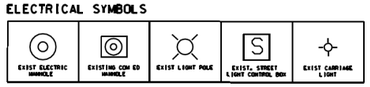


### TRAFFIC SYMBOLS

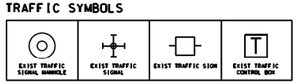


### RAILROAD SYMBOLS

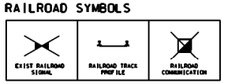


### VEGETATION SYMBOLS

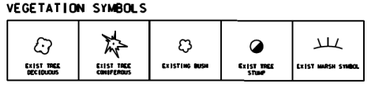


### TELEPHONE SYMBOLS

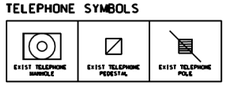


### MISCELLANEOUS SYMBOLS

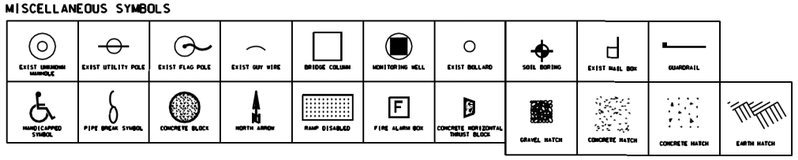


G-4
SHT. 1 OF 2

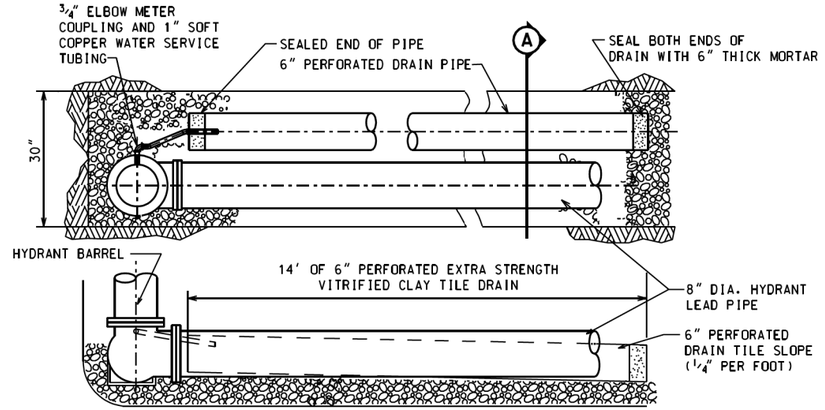


LAYING CONDITION

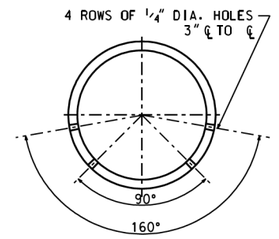


DETAIL "A"
DRAIN TILE DRAIN HOLES

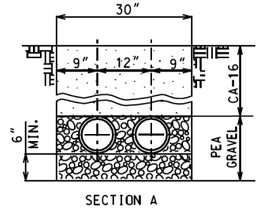


SECTION A

TILE PIPE & HYDRANT BRANCH
EMBEDDED IN PEA GRAVEL

NOTES:

1. WATER TABLE MUST BE BELOW BOTTOM OF TRENCH.
2. LAY DRAIN PIPE IN WATER MAIN TRENCH IF HYDRANT LEAD PIPE IS NOT LONG ENOUGH TO ACHIEVE 14' DRAIN PIPE LENGTH.
3. PLACE DRAIN PIPES SO HOLES ARE FACING DOWN, SEE DETAIL A.
4. COPPER WATER SERVICE TUBING MUST BE ENCASED IN POLYETHYLENE WRAP.

REV:04.09

# FIRE HYDRANT DRAIN DETAIL

D-5

PLOT DATE: 4/9/2021
PLOT SCALE: 480.0000 ' / ft.
FILE NAME: pw:\cdot-pw-4nt.civiltech.local\civiltech Projects\Documents\Projects\3153\CAD\Sheets\Water Main\Detail Sheets\sh-wm-2001.dgn

| | | | | | |
|---|---|---|---|---|---|
| DESIGN: CZ | | | | | |
| DRAWN: CZ | | | | | |
| CHECKED: DM | | | | | |
| APPROVED: | NO. | BY | DATE | DESCRIPTION | |
| DATE: 01/22/2021 | REVISIONS | | | | |

CDOT CHICAGO DEPARTMENT OF TRANSPORTATION

C*NECT

WATER MAIN REPLACEMENT
CDWM WATER MAIN DETAILS
S. STONY ISLAND AVE.

JACKSON PARK MOBILITY IMPROVEMENTS

STA. N/A TO STA. N/A

| | | | |
|---|---|---|---|
| CONTRACT NO. - | | TOTAL SHEETS | SHEET NO. |
| PROJECT NO. B-7-203 | | 1434 | 675 |
| SCALE: NONE | | DRAWING NO. WM-16 | |

## GENERAL NOTES

1. LOCATION OF UTILITIES AND PROPERTY LINES ARE FROM THE BEST INFORMATION AVAILABLE. EXACT LOCATION AND COMPLETENESS ARE NOT GUARANTEED.
2. THE CONTRACTOR MUST VERIFY THE LOCATION OF UNDERGROUND UTILITIES WITH THE UTILITY OWNERS PRIOR TO DOING ANY WORK IN THE VICINITY. THE CONTRACTOR MUST COMPLY WITH REQUIREMENTS OF UTILITY OWNERS REGARDING NOTICE OF WORK AND PROTECTION OF UTILITIES. THE CONTRACTOR MUST COMPLY WITH THE CITY OF CHICAGO. DEPARTMENT OF TRANSPORTATION DAMAGE PREVENTION PROTOCOL CITY INFRASTRUCTURE DEPARTMENTS. ALL UTILITIES MUST BE NOTIFIED AT LEAST 48 HOURS BEFORE CONSTRUCTION. (CALL DIGGER 312-744-7000).
3. TEST PITS MUST BE EXCAVATED IN ADVANCE OF PIPELINE CONSTRUCTION IN ORDER TO CONFIRM DEPTH AND LOCATION OF EXISTING UTILITIES AND WHEN DIRECTED BY THE DEPARTMENT MANAGER. NO ADDITIONAL PAYMENT WILL BE MADE FOR TEST PIT EXCAVATION.
4. IF ANY PUBLIC OR PRIVATE UTILITIES CROSS THE WATER MAIN TRENCH AND MUST REMAIN IN PLACE. THE CONTRACTOR MUST PROTECT SAID UTILITY IN CONFORMANCE WITH THE SPECIFICATIONS OR AS DIRECTED BY THE COMMISSIONER.
5. PROVIDE EROSION CONTROL IN ACCORDANCE WITH THE SPECIFICATIONS.
6. FITTINGS AND THEIR LOCATIONS INDICATED ON THE DRAWINGS ARE TENTATIVE. THE CONTRACTOR MUST COMPLETE THE INSTALLATION WITH THE NECESSARY FITTINGS DICTATED BY FIELD CONDITIONS. NO ADDITIONAL PAYMENT WILL BE MADE FOR DEVIATIONS FROM THE INDICATED FITTINGS.
7. WORK INDICATED ON THE PLANS AND NOT REFERENCED TO A BID ITEM IS CONSIDERED INCIDENTAL TO THE WORK TO WHICH IT APPLIES AND NO ADDITIONAL COMPENSATION WILL BE ALLOWED.
8. WATER MAIN AND FITTINGS LOCATIONS SHOWN ON THE DRAWINGS FOR THE NEW WATER MAINS AND APPURTENANCES MAY BE CHANGED BY THE COMMISSIONER DUE TO FIELD CONDITIONS. NO ADDITIONAL COMPENSATION WILL BE ALLOWED FOR SUCH CHANGES. UNLESS PREVIOUSLY APPROVED BY THE COMMISSIONER.
9. THE CONTRACTOR MUST PROVIDE THRUST RESTRAINTS IN ACCORDANCE WITH THE SPECIFICATIONS. THE CONTRACTOR MUST FURNISH AND INSTALL MECHANICAL JOINT THRUST RESTRAINT GLANDS AT ALL FITTINGS AND MECHANICAL JOINTS.
10. THE CONTRACTOR MUST VERIFY THE OPERATION OF EVERY VALVE NECESSARY FOR THE REQUIRED WATER MAIN SHUT DOWN FOR EACH PIPE SECTION. FOR VALVES OR WATER MAINS UNDER 16-INCHES IN DIAMETER. THE WORK MUST BE DONE UNDER THE DIRECT SUPERVISION OF A DEPARTMENT REPRESENTATIVE AT LEAST 2 WEEKS PRIOR TO THE START OF THE JOB. A 24 HOUR ADVANCE NOTICE MUST BE GIVEN TO ALL CONSUMERS EFFECTED AND THE BUREAU OF OPERATIONS AND DISTRIBUTION. THE OPERATION OF ALL VALVES 16-INCHES IN DIAMETER AND LARGER MUST BE PERFORMED BY CITY FORCES PURSUANT TO A 72 HOUR ADVANCE NOTIFICATION TO THE DEPARTMENT. ANY VALVE FOUND NOT OPERABLE WILL BE REPAIRED OR REPLACED BY THE DEPARTMENT UNLESS DIRECTED OTHERWISE BY THE COMMISSIONER.
11. IN INSTANCES WHERE CHLORINATION IS TO BE DONE AGAINST ANY EXISTING VALVE. AT THE TIME THAT THE EXISTING WATER MAIN IS BREACHED FOR FINAL CONNECTION. THE CONTRACTOR IS TO VERIFY THAT THE EXISTING VALVES ARE IN GOOD OPERATING CONDITION AND DO NOT LEAK. ANY LEAKING VALVE SHOULD BE BROUGHT TO THE COMMISSIONERS' ATTENTION AND BE REPAIRED OR REPLACED PRIOR TO MAKING PIPE CONNECTIONS TO THE EXISTING WATER MAIN. THE VALVE SHOULD REMAIN IN THE CLOSED POSITION UNTIL THE NEW WATER MAIN IS APPROVED FOR SERVICE.

REV:04.07

GENERAL NOTES
WATER MAIN CONTRACTS

D-20
SHT. 1 OF 2

## GENERAL NOTES (CONTINUED)

12. ALL OPENINGS IN EXISITNG WATER MAINS MUST BE PLUGGED OR CAPPED WITH DUCTILE IRON FITTINGS UNTIL THE MAIN IS ABANDONED.
13. ALL VALVE BASINS MUST BE CONSTRUCTED OF PRE-CAST REINFORCED CONCRETE UNLESS DIRECTED OTHERWISE BY THE COMMISSIONER.
14. NOTES INDICATING S.N.L., E.W.L., ETC., MEAN SOUTH OF THE NORTH PROPERTY LINE. EAST OF THE WEST PROPERTY LINE. ETC. AND ARE MEASURED FROM THE NEAREST STREET.
15. IF A STANDARD MECHANICAL JOINT SLEEVE DOES NOT FIT TO MAKE CONNECTION OF THE NEW PIPE TO THE EXISTING PIPE. A TRANSITION SLEEVE MUST BE USED. NO GRINDING OF THE EXISTING PIPE IS PERMITTED.
16. BURIED STREET CAR TRACKS ARE SHOWN FOR INFORMATIONAL PURPOSES ONLY. EXACT LOCATIONS AND DIMENSIONS ARE UNKNOWN UNLESS NOTED OTHERWISE. CAUTION SHOULD BE EXERCISED WHEN EXCAVATING IN THE STREETS CONTAINING BURIED STREET CAR TRACKS. BURIED TRACKS AND CABLES MAY BE USED FOR ELECTRICAL GROUNDING BY THE CHICAGO TRANSIT AUTHORITY OR MEMBERS OF THE CHICAGO AREA JOINT ELECTROLYSIS COMMITTEE STANDARDS. ELECTRICAL CONDUCTIVITY MUST BE MAINTAINED.
17. HOUSE DRAINS ARE NOT SHOWN ON THE DRAWINGS. THE CONTRACTOR MUST LOCATE ALL HOUSE DRAINS WITHIN THE AREA OF EXCAVATION AND MAKE ADJUSTMENTS AND/OR REPAIRS.
18. THE DEPARTMENT WILL PROVIDE THE NECESSARY I.E.P.A. WATER MAIN CONSTRUCTION PERMITS FOR THIS CONTRACT.
19. WORK WITHIN STATE ROUTES ARE NOTED ON THE DRAWINGS AND WILL REQUIRE I.D.O.T., REGION 1, UTILITY PERMITS. THE CONTRACTOR IS RESPONSIBLE FOR SECURING ALL PERMITS. INITIATED BY THE DEPARTMENT AND OBTAINING PERFORMANCE BONDS. ALL WORK MUST BE IN ACCORDANCE WITH I.D.O.T. PERMIT REQUIREMENTS. QUESTIONS SHOULD BE DIRECTED TO: I.D.O.T REGION ONE UTILITIES COORDINATOR AT (847) 705-4258.
20. ABANDON EXISTING WATER MAINS IN ACCORDANCE WITH THE SPECIFICATIONS.
21. SWAB PIPE AND FITTINGS THAT WILL NOT BE PRESSURE TESTED OR CHLORINATED WITH CHLORINE SOLUTION DURING INSTALLATION AND USE EXTRA PRECAUTION TO PREVENT SOIL AND DEBRIS FROM ENTERING THE PIPE. INCORPORATE UNTESTED PIPE INTO THE FLUSHING ROUTINE WHEN POSSIBLE. WHEN CONNECTING NEW PIPE TO THE EXISTING WATER SYSTEM. USE OPERATING PRESSURE TO VISUALLY INSPECT FOR LEAKS. WHEN FEASIBLE. PERFORM INSPECTION PRIOR TO BACKFILLING. COMPLY WITH ALL STANDARDS AND REQUIREMENTS OF THE BUREAU OF WATER QUALITY (312) 744-8190.

REV:04.07

GENERAL NOTES
WATER MAIN CONTRACTS

D-20
SHT. 2 OF 2

PLOT DATE: 4/9/2021
PLOT SCALE: 480.0000 ' / ft.
FILE NAME: pw:\cdot-pw-int.chiltech.local:Chiltech Projects\Documents\Projects\3153\CADs\Sheets\Water Main\Detail Sheets\sht-wm-d02.dgn

| | | | | |
|---|---|---|---|---|
| DESIGN: CZ | | | | |
| DRAWN: CZ | | | | |
| CHECKED: DM | | | | |
| APPROVED: | NO. | BY | DATE | DESCRIPTION |
| DATE: 01/22/2021 | REVISIONS | | | |

CDOT CHICAGO DEPARTMENT OF TRANSPORTATION

C*NECT

WATER MAIN REPLACEMENT
CDWM WATER MAIN DETAILS
S. STONY ISLAND AVE.

JACKSON PARK MOBILITY IMPROVEMENTS

STA. N/A TO STA. N/A

| | |
|---|---|
| CONTRACT NO. - | TOTAL SHEETS 1434 |
| PROJECT NO. B-7-203 | SHEET NO. 676 |
| SCALE: NONE | DRAWING NO. WM-17 |

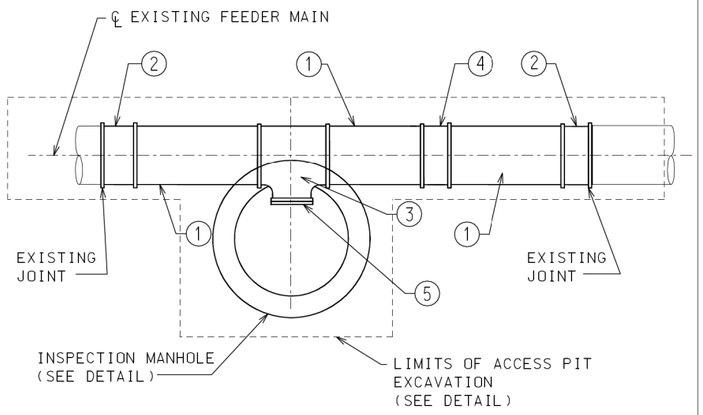


NOTES

1. DUCTILE IRON WATER MAIN
2. ADAPTER P.C.C.P. TO DUCTILE IRON
3. 24" BRANCH DUCTILE IRON 3BMJ TEE
4. MJ SLEEVE
5. 24" MJ PLUG AND GASKET
6. MEGALUGS AT ALL MJ JOINTS

THIS DETAIL IS PROVIDED FOR REFERENCE PURPOSES ONLY

REV:06.10

INSPECTION MANHOLE INSTALLATION
REPLACE PIPE

FM-2
SHT. 1 OF 2

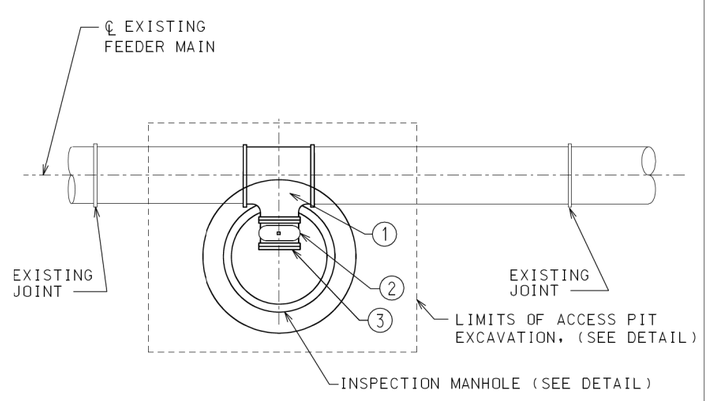


NOTES

1. TAPPING SADDLE WITH 24" FLANGE ENCASE BURIED METAL PARTS IN CONCRETE. CONCRETE MUST NOT CONTAIN FLY ASH.
2. TAPPING VALVE
3. 24" BLIND FLANGE AND GASKET.

TYPICAL FOR INSTALLATION ADJACENT TO BUTTERFLY VALVES OVER 24" DIAMETER, UNLESS OTHERWISE NOTED ON THE DRAWINGS OR DIRECTED BY THE COMMISSIONER.

THIS DETAIL IS PROVIDED FOR REFERENCE PURPOSES ONLY

REV:06.10

INSPECTION MANHOLE
INSTALLATION ALTERNATIVE A - PIPE TAP

FM-2
SHT. 2 OF 2

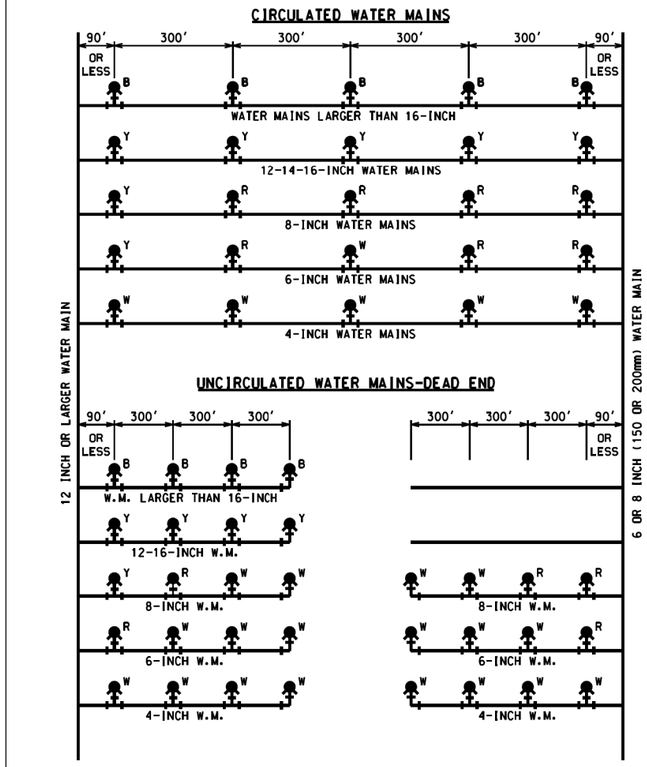


B-BLUE FLANGE Y-YELLOW FLANGE R-RED FLANGE W-WHITE FLANGE
ALL PUBLIC FIRE HYDRANTS ARE TO BE PAINTED RED EXCEPT FOR THE TOP FLANGES WHICH MUST BE COLOR CODED.

REV:04.07

COLOR CODE FOR FIRE HYDRANTS

D-7

PLOT DATE: 4/9/2021
PLOT SCALE: 480.0000 ' / ft.
FILE NAME: pw:\cdot-pw-int.civiltech.local\Civiltech Projects\Documents\Projects\3153\CAD\Sheets\Water Main\Detail Sheets\shi-wm-d03.dgn

| | | | | |
|---|---|---|---|---|
| DESIGN: CZ | | | | |
| DRAWN: CZ | | | | |
| CHECKED: DM | | | | |
| APPROVED: | NO. | BY | DATE | DESCRIPTION |
| DATE: 01/22/2021 | REVISIONS | | | |

CHICAGO DEPARTMENT OF TRANSPORTATION

C*NECT

WATER MAIN REPLACEMENT
CDWM WATER MAIN DETAILS
S. STONY ISLAND AVE.

JACKSON PARK MOBILITY IMPROVEMENTS

STA. N/A TO STA. N/A

| | | |
|---|---|---|
| CONTRACT NO. - | TOTAL SHEETS 1434 | SHEET NO. 677 |
| PROJECT NO. B-7-203 | DRAWING NO. WM-18 | |
| SCALE: NONE | | |

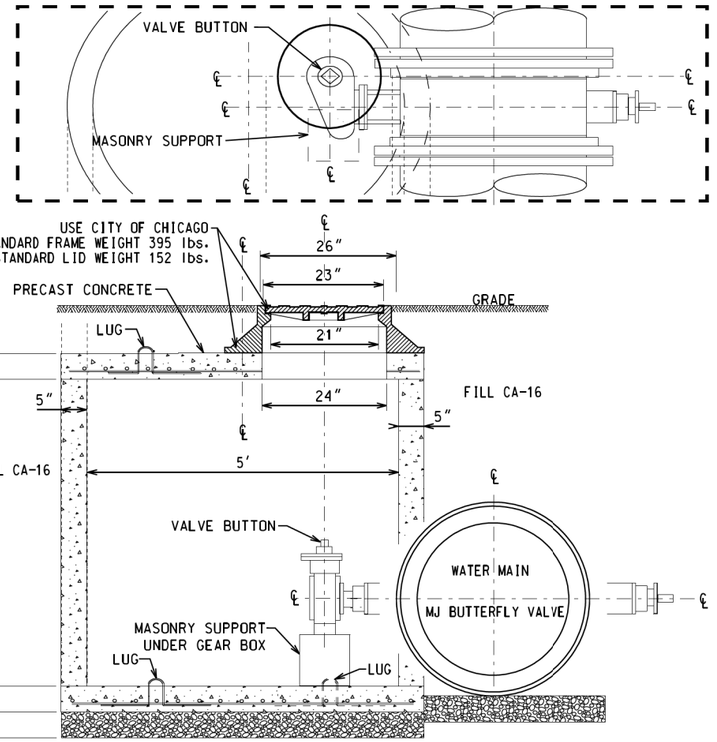


NOTES:

1. PRECAST CONCRETE TOP SLAB TO BE USED WHERE HEAD ROOM IS REQUIRED.
2. PRECAST 6" THICK CONCRETE SLAB WITH #4 EPOXY COATED REBARS 4" C/C BOTHWAYS.
3. PROVIDE FOUR #4 REBAR LUGS FOR HANDLING. CUT THE LUGS AFTER PLACING THE SLAB IN POSITION.
4. PROVIDE 24-INCH DIAMETER OPENING IN THE CENTER OR AS REQUIRED.
5. THE LOCATION OF MANHOLE TO BE DETERMINED ON INDIVIDUAL BASIS.
6. PROVIDE 6" THICK COMPACTED CA-16 BEDDING.

BUTTERFLY VALVE BASIN
PRECAST CONCRETE

REV:07.07

FM-15

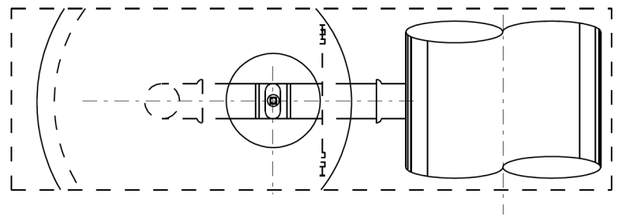

PLAN

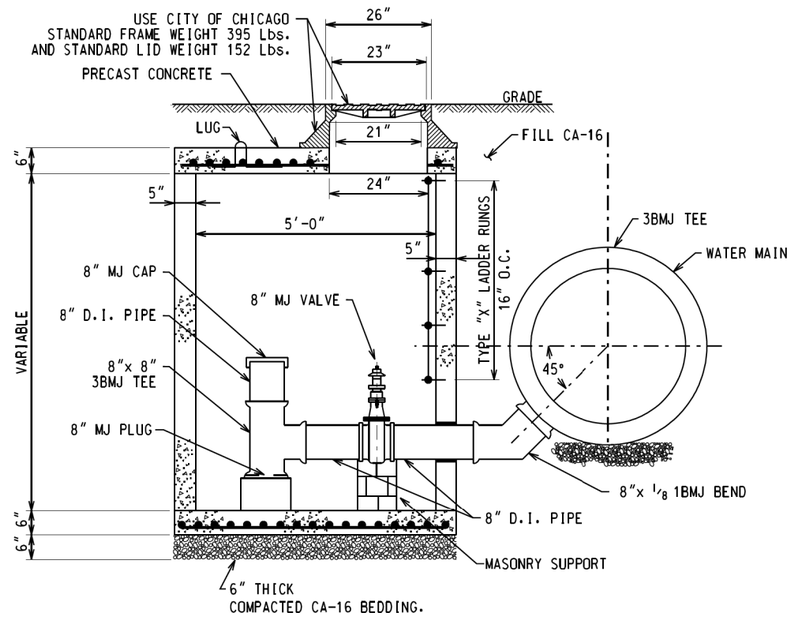


SECTIONAL VIEW

NOTE: INSTALL MEGALUGS ON ALL MECHANICAL JOINTS.

TYPICAL BLOW-OFF/FIRE CISTERN
PRECAST CONCRETE

REV:04.07

FM-19

PLOT DATE: 4/9/2021
PLOT SCALE: 480.0000 ' / ft.
FILE NAME: pw:\\cdot-pwlibrary.int-civiltech.local:CivilTech Projects\Documents\Projects\3153\CADD\Sheets\Water Main\Detail Sheets\int-wm-304.dgn

| | | | | | |
|---|---|---|---|---|---|
| DESIGN: CZ | | | | | |
| DRAWN: CZ | | | | | |
| CHECKED: DM | | | | | |
| APPROVED: | NO. | BY | DATE | DESCRIPTION | |
| DATE: 01/22/2021 | REVISIONS | | | | |

CDOT CHICAGO DEPARTMENT OF TRANSPORTATION

C*NECT

WATER MAIN REPLACEMENT
CDWM WATER MAIN DETAILS
S. STONY ISLAND AVE.

JACKSON PARK MOBILITY IMPROVEMENTS

STA. N/A TO STA. N/A

| | | | |
|---|---|---|---|
| CONTRACT NO. - | | TOTAL SHEETS | SHEET NO. |
| PROJECT NO. B-7-203 | | 1434 | 678 |
| SCALE: NONE | | DRAWING NO. WM-19 | |

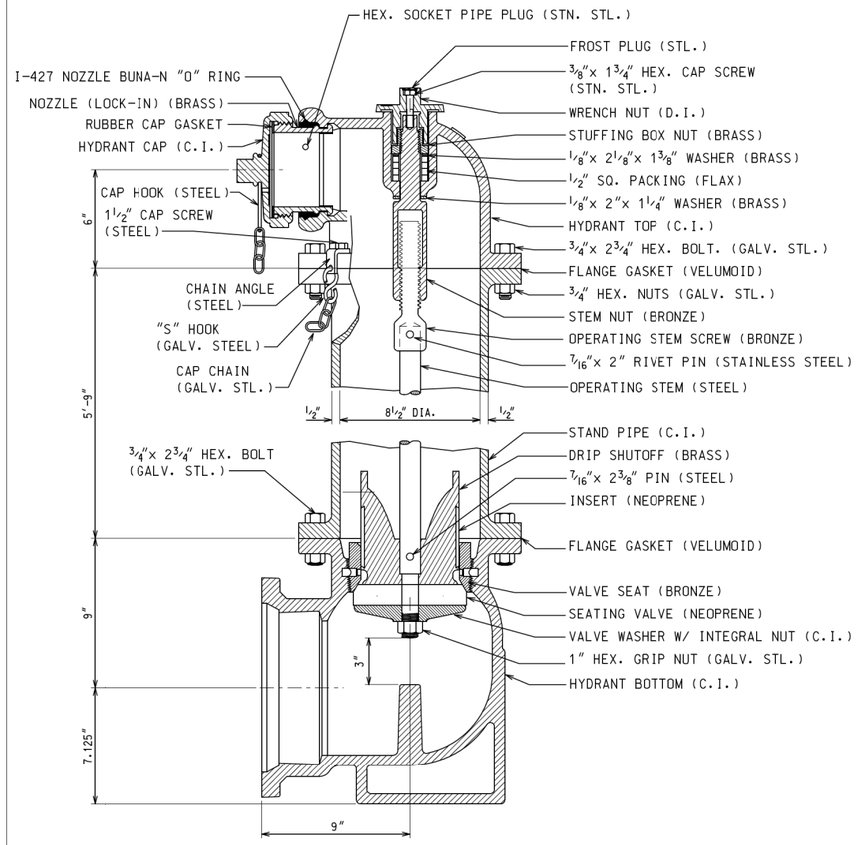


CROSS-SECTIONAL VIEW

NOTE:

1. TOP CASTING IS TURNED 45° FROM TRUE POSITION IN SECTIONAL VIEW.

REV:06.10

CHICAGO FIRE HYDRANT DETAIL

D-1
SHT. 1 OF 8

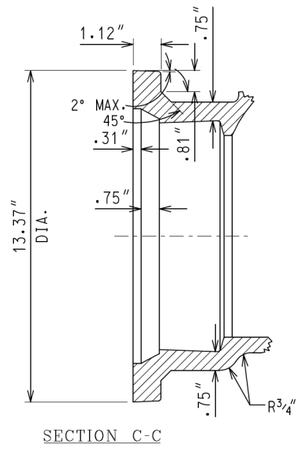


SECTION C-C

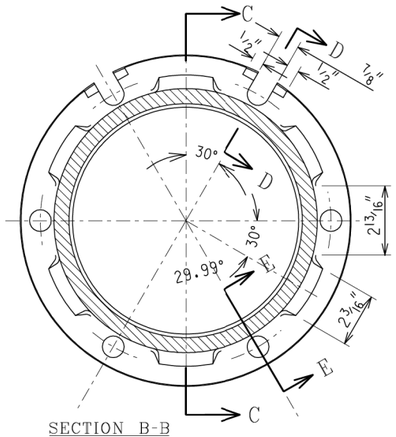


SECTION B-B

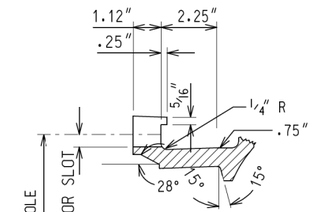


SECTION D-D

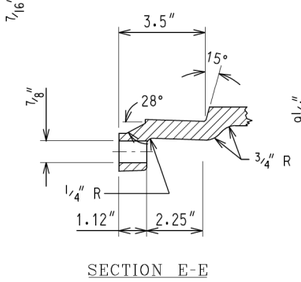


SECTION E-E

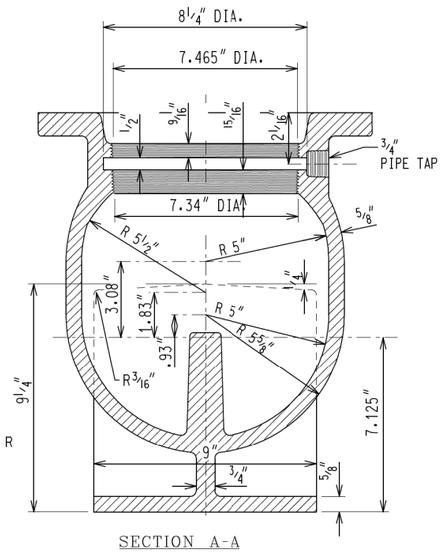


SECTION A-A

HYDRANT BOTTOM

REV:04.07

CHICAGO FIRE HYDRANT DETAIL

D-1
SHT. 2 OF 8

PLOT DATE: 4/9/2021
PLOT SCALE: 480.0000 ' / ft.
FILE NAME: pw:\cdot-pw-int.civiltech.local:CivilTech Projects:Documents\Projects\3153\CAD\Sheets\Water Main\Detail Sheets\sht-wm-d05.dgn

| | | | | | |
|---|---|---|---|---|---|
| DESIGN: CZ | | | | | |
| DRAWN: CZ | | | | | |
| CHECKED: DM | | | | | |
| APPROVED: | NO. | BY | DATE | DESCRIPTION | |
| DATE: 01/22/2021 | REVISIONS | | | | |

CDOT CHICAGO DEPARTMENT OF TRANSPORTATION

C*NECT

WATER MAIN REPLACEMENT
CDWM WATER MAIN DETAILS
S. STONY ISLAND AVE.

JACKSON PARK MOBILITY IMPROVEMENTS

STA. N/A TO STA. N/A

| | | |
|---|---|---|
| CONTRACT NO. - | TOTAL SHEETS | SHEET NO. |
| PROJECT NO. B-7-203 | 1434 | 679 |
| SCALE: NONE | DRAWING NO. WM-20 | |

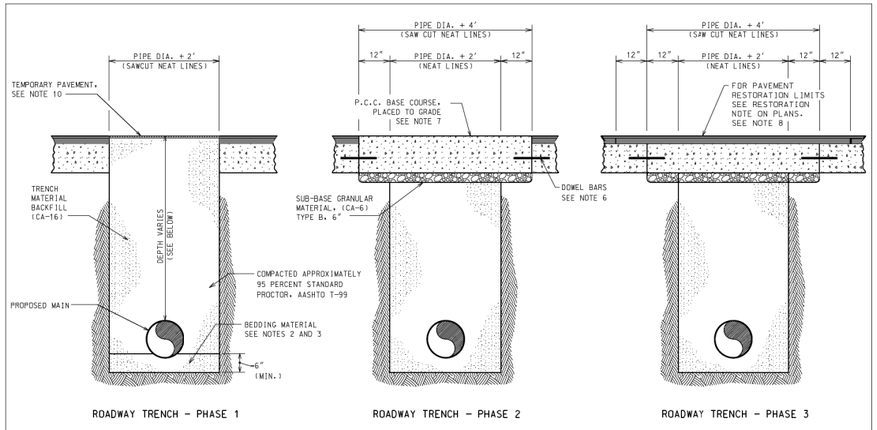


ROADWAY TRENCH - PHASE 1 | ROADWAY TRENCH - PHASE 2 | ROADWAY TRENCH - PHASE 3

| PIPE DEPTH REQUIREMENTS | |
|---|---|
| MINIMUM DEPTH OF COVER FOR WATER MAINS | |
| SIZE OF PIPE | DEPTH OF COVER |
| ¾" TO 3" | 5'-6" ± 3" |
| 4" | 5'-6" ± 3" |
| 6" | 5'-6" ± 3" |
| 8" | 5'-3" ± 3" |
| 12" | 5'-0" ± 2" |
| 16" | 5'-0" ± 2" |
| 24" | 4'-6" ± 2" |
| 30" TO 42" | 3'-6" MIN.(SEE PLAN) |
| 48" & LARGER | 3' MIN.(SEE PLAN) |

**PHASE 1:** BACKFILL CA-16 TO GRADE FOLLOWING THE INSTALLATION OF PROPOSED WATER MAIN.

**PHASE 2:** P.C.C. BASE COURSE TO GRADE FOLLOWING THE APPROVAL OF PROPOSED MAIN AND SUCCESSFUL COMPLETION OF SERVICE TRANSFERS AND CONNECTIONS.

**PHASE 3:** FINAL PAVEMENT RESTORATION. LIMITS AS INDICATED ON PLANS.

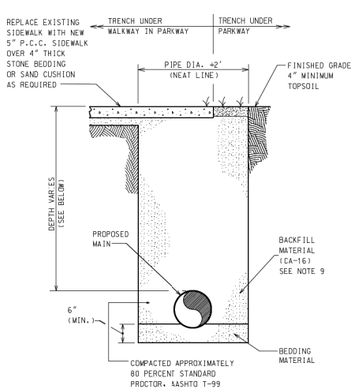


PARKWAY TRENCH

GENERAL NOTES:

1. PROVIDE PIPE BEDDING TO A DEPTH OF 1/8 OF PIPE DIAMETER OR 6" MINIMUM OF COMPACTED GRANULAR MATERIAL. GRAVEL. OR CRUSHED STONE.
2. USE CA-16 BEDDING MATERIAL FOR PIPE SIZES UP TO 16-INCH DIAMETER.
3. USE CA-11 BEDDING MATERIAL FOR PIPE SIZES LARGER THAN 16-INCH DIAMETER.
4. ALL EXCAVATIONS MUST BE PROPERLY SHORED. SHEETED AND BRACED TO PROVIDE SAFE WORKING CONDITIONS. ALL IN COMPLIANCE WITH THE U.S. DEPARTMENT OF LABOR SAFETY AND HEALTH REGULATIONS FOR CONSTRUCTION STIPULATED UNDER THE OCCUPATIONAL SAFETY AND HEALTH ACT. (O.S.H.A.).
5. PLATE ALL UNATTENDED EXCAVATIONS IN PAVEMENT AREAS AND SECURE PLATES TO PAVEMENT AND PROVIDE BARRIERS IN PARKWAY AREAS.
6. DOWEL BARS SHALL BE #5 EPOXY COATED BARS. 18" LONG DRILLED. WITH 9" EMBEDMENT AND GROUTED AT 30" CENTERS. DOWEL BARS MAY BE OMITTED ON C.D.O.T. STREETS WHERE CLSM USED AS TRENCH BACKFILL.
7. FOLLOWING THE APPROVAL OF PROPOSED MAIN AND SUCCESSFUL COMPLETION OF SERVICE TRANSFERS AND CONNECTIONS. PLACE CONCRETE BASE COURSE FLUSH TO GRADE. THE ADDITIONAL THICKNESS IS TO BE REMOVED DURING PAVEMENT RESTORATION WORK. FINAL CONCRETE BASE THICKNESS MUST BE PER C.D.O.T. AND I.D.O.T. REQUIREMENTS. WHEN THE THICKNESS OF THE EXISTING ROADWAY BASE MATERIAL IS LESS THAN THE MINIMUM THICKNESS INDICATED IN THE PLANS. THE BOTTOM OF BASE MATERIAL WILL EXTEND BELOW THE BOTTOM OF THE BASE MATERIAL OF THE EXISTING PAVEMENT.
8. FINAL PAVEMENT RESTORATION SHALL BE COMPLETED AS INDICATED IN THE RESTORATION NOTE ON THE PLANS AND IN COMPLIANCE WITH C.D.O.T. AND STANDARDS. THE C.D.O.T. STREET PAVEMENT RESTORATION DETAIL HAS BEEN INCLUDED IN THESE DETAILS FOR REFERENCE.
9. EXCAVATED MATERIAL MAY BE USED IN PLACE OF (CA-16) IN PARKWAY TRENCHES. THE MATERIAL MUST BE PULVERIZED AND APPROVED BY THE COMMISSIONER.
10. ALL ACTIVE TRENCH CUTS OR EXCAVATIONS OPEN TO TRAFFIC INCLUDING VEHICLES. PEDESTRIANS. BICYCLES. ETC.. MUST HAVE TEMPORARY PAVEMENT WHICH CONSISTS OF HMA OR ASPHALT COLD PATCH TO PROVIDE A SMOOTH AND LEVEL SURFACE. COMPACTED CRUSHED STONE FILL WILL BE ALLOWED AS TEMPORARY PAVEMENT IN ACTIVE TRENCH CUTS OR EXCAVATIONS LOCATED IN PERMITTED CLOSED WORK ZONES TO ALLOW FOR TEMPORARY PARKING RELIEF AS DIRECTED BY THE COMMISSIONER AND MUST MEET THE REQUIREMENTS OF SECTION 351 OF THE SSRBC.

REV:12.18

## WATER MAIN TRENCH PHASE DETAILS

D-8

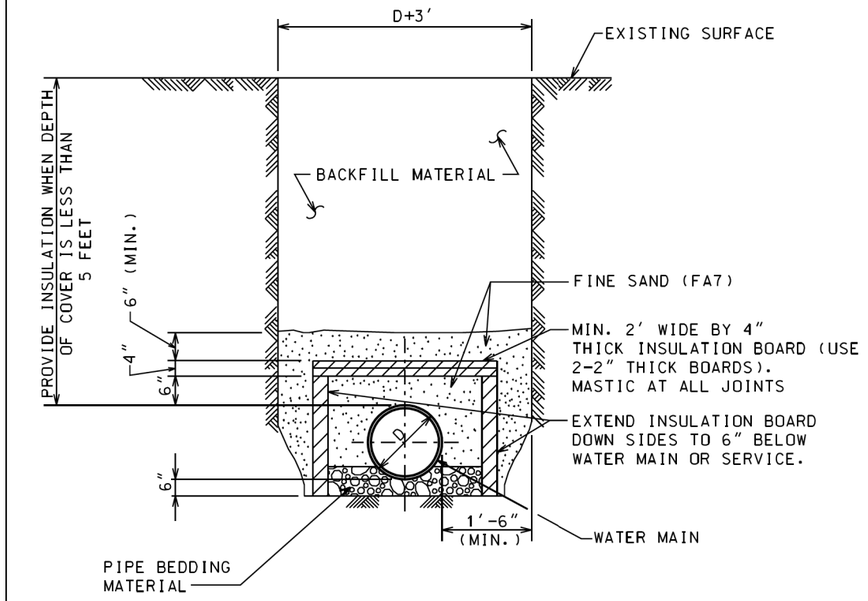


NOTES:

1. INSULATION BOARD TO BE CLOSED CELL. EXTRUDED POLYSTYRENE FOAM MEETING ASTM 578. TYPE VI. 40 PSI COMPRESSING STRENGTH (ASTM D1621) 0.1% MAX. WATER ABSORPTION (ASTM C272).
2. BACKFILL MATERIAL AROUND INSULATION MUST BE FINE SAND FREE FROM ROOTS. ORGANIC MATTER. OR OTHER INJURIOUS MATERIALS.
3. OVERLAP ALL INSULATION BOARD JOINTS.

REV:04.07

## WATER MAIN TRENCH INSULATION DETAIL

D-9

PLOT DATE: 4/9/2021
PLOT SCALE: 480.0000 ' / ft.
FILE NAME: pw:\\ckh-jax-fnt.civiltech.local:CivilTech Projects\Documents\Projects\3153\CAD\Sheets\Water Main\Detail Sheets\dts-wm-D06.dgn

| | | | | | |
|---|---|---|---|---|---|
| DESIGN: CZ | | | | | |
| DRAWN: CZ | | | | | |
| CHECKED: DM | | | | | |
| APPROVED: | NO. | BY | DATE | DESCRIPTION | |
| DATE: 01/22/2021 | REVISIONS | | | | |

CHICAGO DEPARTMENT OF TRANSPORTATION

C*NECT

WATER MAIN REPLACEMENT
CDWM WATER MAIN DETAILS
S. STONY ISLAND AVE.

JACKSON PARK MOBILITY IMPROVEMENTS

STA. N/A TO STA. N/A

| CONTRACT NO. | TOTAL SHEETS | SHEET NO. |
|---|---|---|
| - | 1434 | 680 |
| PROJECT NO. B-7-203 | DRAWING NO. WM-21 | |
| SCALE: NONE | | |

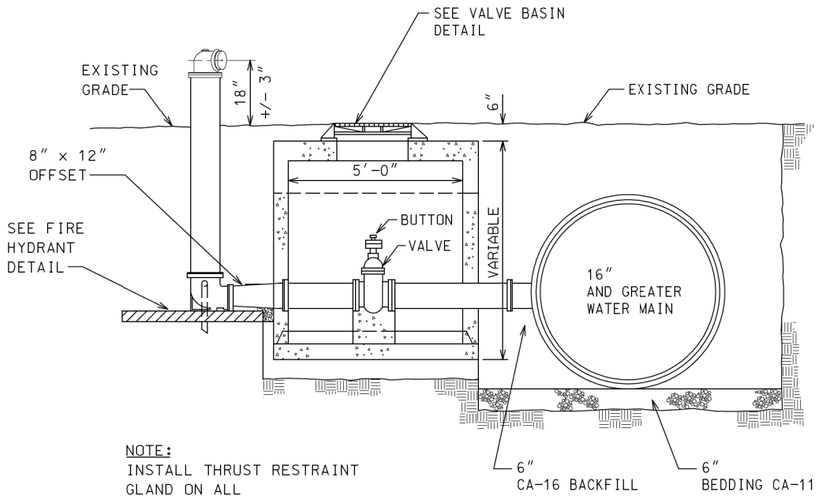


NOTE:
INSTALL THRUST RESTRAINT GLAND ON ALL MECHANICAL JOINTS.

# FIRE HYDRANT SETTING
# 16″ & LARGER WATER MAIN

REV:04.09

FM-5

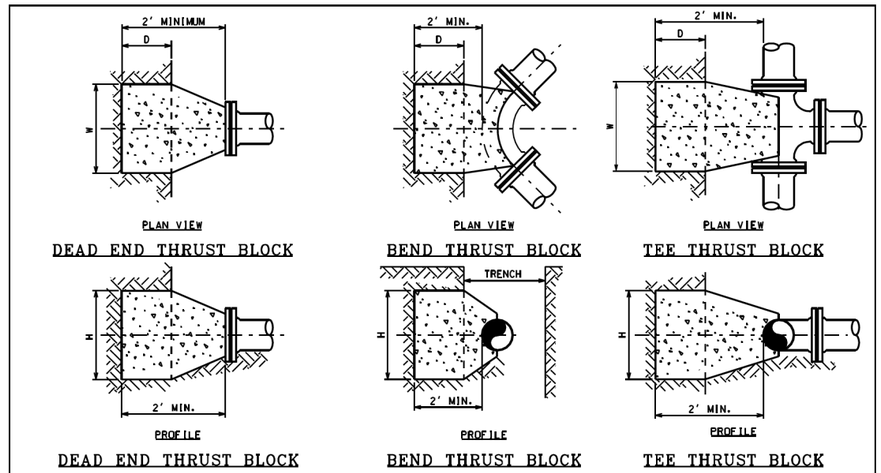


## HORIZONTAL THRUST BLOCK DETAILS

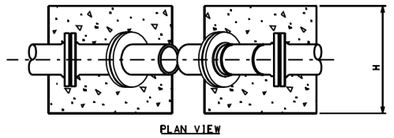


TABLE 1

| PIPE SIZE | DEAD END & TEE | | | | HORIZONTAL 1/4 BEND | | | | HORIZONTAL 1/8 BEND | | | |
|---|---|---|---|---|---|---|---|---|---|---|---|---|
| INCH DIA. | D | H | W | CY | D | H | W | CY | D | H | W | CY |
| 16 | 1 | 5.5 | 4.5 | 2 | 1 | 6.5 | 5 | 2.5 | 1 | 4.5 | 4 | 1.5 |
| 12 | 1 | 3.5 | 3.5 | 1 | 1 | 4 | 4 | 1.5 | 1 | 3 | 3 | .75 |
| 8 | .5 | 2.5 | 2.5 | .5 | .5 | 3 | 3 | .5 | .5 | 2 | 2 | .3 |

| PIPE SIZE | HORIZONTAL 1/16 BEND | | | | HORIZONTAL 1/32 BEND | | | |
|---|---|---|---|---|---|---|---|---|
| INCH DIA. | D | H | W | CY | D | H | W | CY |
| 16 | 1 | 3.5 | 3.5 | 1 | 1 | 2.5 | 2.5 | .6 |
| 12 | 1 | 2.5 | 2.5 | .5 | 1 | 2 | 2 | .4 |
| 8 | .5 | 1.5 | 1.5 | .25 | .5 | 1.5 | 1.5 | .25 |

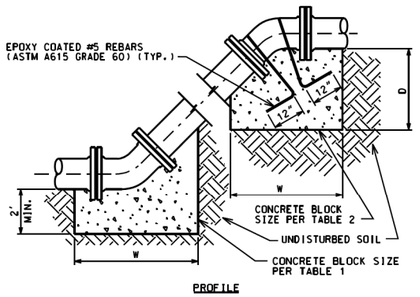


## VERTICAL THRUST BLOCK DETAILS

TABLE 2

| PIPE SIZE | VERTICAL 1/8 BEND | | | | VERTICAL 1/8 BEND BOTTOM | | | |
|---|---|---|---|---|---|---|---|---|
| INCH DIA. | D | H | W | CY | D | H | W | CY |
| 16 | 7 | 6 | 6 | 11 | 2 | 4.5 | 4 | 2.25 |
| 12 | 5 | 6 | 5 | 7 | 2 | 3 | 3 | 1 |
| 8 | 4.5 | 4 | 4 | 3.5 | 2 | 2 | 2 | .5 |

D IS THE DIMENSION INTO UNDISTURBED GROUND IN FEET
H IS HEIGHT OF THRUST BLOCK IN FEET
W IS WIDTH OF THRUST BLOCK IN FEET
ALL DIMENSIONS ARE MINIMUM.
THRUST BLOCKS IN LOOSE FILL OR SAND AREAS ARE NOT INCLUDED IN THESE TABLES AND WILL REQUIRE ADDITIONAL ANALYSIS.

NOTES:

1. FULL CONCRETE THRUST BLOCKS AS SHOWN ARE REQUIRED WHEN THRUST RESTRAIN IS NOT PROVIDED BY OTHER MEANS SUCH AS RESTRAINED JOINT PIPE.
2. WHEN THRUST RESTRAINT GLANDS ARE INSTALLED FOR THE CONNECTIONS. CONCRETE THRUST BLOCKS SHALL BE PROVIDED UP TO THE THE DOTTED LINE AS SHOWN.
3. ALL BOLTS. NUTS. THRUST RESTRAINT GLANDS AND FITTINGS SHALL BE WRAPPED WITH POLYETHYLENE TUBING TO PREVENT CORROSION AND CONCRETE ADHESION.
4. CONCRETE FOR THRUST BLOCKS MUST NOT CONTAIN FLY ASH.

# THRUST RESTRAINT
# CONCRETE THRUST BLOCK DETAILS

REV:04.07

D-11

PLOT DATE: 4/9/2021
PLOT SCALE: 480.0000 ' / ft.
FILE NAME: pw:\cdot-pw-int.chiltech.local:Chiltech Projects\Documents\Projects\3153\CADD\Sheets\Water Main\Detail Sheets\sht-wm-307.dgn

| DESIGN: CZ | | | | |
|---|---|---|---|---|
| DRAWN: CZ | | | | |
| CHECKED: DM | | | | |
| APPROVED: | NO. | BY | DATE | DESCRIPTION |
| DATE: 01/22/2021 | REVISIONS | | | |

CDOT CHICAGO DEPARTMENT OF TRANSPORTATION

C*NECT

WATER MAIN REPLACEMENT
CDWM WATER MAIN DETAILS
S. STONY ISLAND AVE.

JACKSON PARK MOBILITY IMPROVEMENTS

STA. N/A TO STA. N/A

| CONTRACT NO. | TOTAL SHEETS | SHEET NO. |
|---|---|---|
| - | 1434 | 681 |
| PROJECT NO. B-7-203 | DRAWING NO. WM-22 | |
| SCALE: NONE | | |

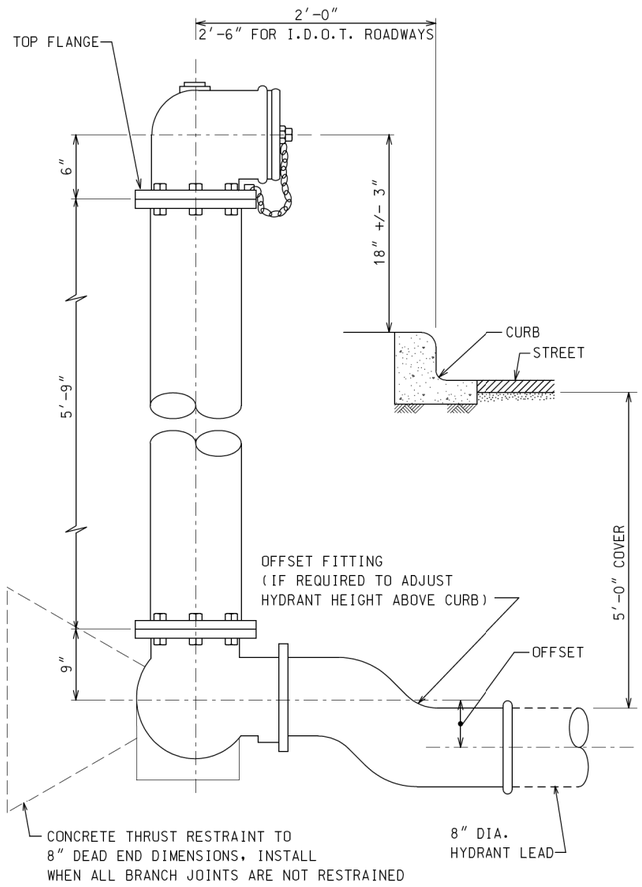


NOTE:

1. SEE FIRE HYDRANT DRAIN DETAILS.
2. ALL BURIED DUCTILE IRON HYDRANT COMPONENTS MUST BE WRAPPED IN POLYETHYLENE ENCASEMENT.
3. SEE DETAIL D-5 FOR FIRE HYDRANT DRAIN ASSEMBLY
4. THE TOP AND FACE OF THE CURB ARE TO BE PAINTED 'SAFETY YELLOW' FOR 15 FEET EACH SIDE OF THE FIRE HYDRANT, EXCEPT WHERE THE 15 FOOT DIMENSION INTERSECTS A CROSSWALK, DRIVEWAY OR SIMILAR FEATURE.

REV:06.10

FIRE HYDRANT SETTING DETAIL

D-2

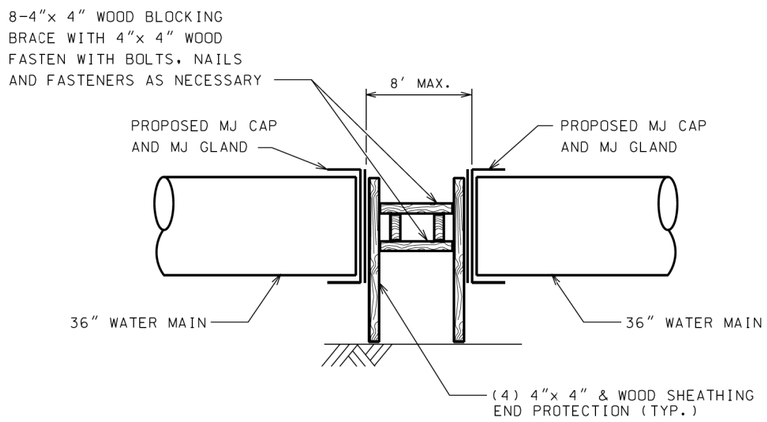


BRACING DETAIL

NOTE:

1. CONTRACTOR TO PROVIDE APPROPRIATE BRACING AS REQUIRED.

PLOT DATE: 4/9/2021
PLOT SCALE: 480.0000 ' / ft.
FILE NAME: pw:\\cdvl-pw-int.civiltech.local:Civiltech Projects\Documents\Projects\3153\CAD\Sheets\Water Main\Detail Sheets\sht-wm-D08.dgn

| | | | | |
|---|---|---|---|---|
| DESIGN: CZ | | | | |
| DRAWN: CZ | | | | |
| CHECKED: DM | | | | |
| APPROVED: | NO. | BY | DATE | DESCRIPTION |
| DATE: 01/22/2021 | REVISIONS | | | |

CDOT CHICAGO DEPARTMENT OF TRANSPORTATION

C*NECT

WATER MAIN REPLACEMENT
CDWM WATER MAIN DETAILS
S. STONY ISLAND AVE.

JACKSON PARK MOBILITY IMPROVEMENTS

STA. N/A TO STA. N/A

| | | |
|---|---|---|
| CONTRACT NO. - | TOTAL SHEETS 1434 | SHEET NO. 682 |
| PROJECT NO. B-7-203 | DRAWING NO. WM-23 | |
| SCALE: NONE | | |

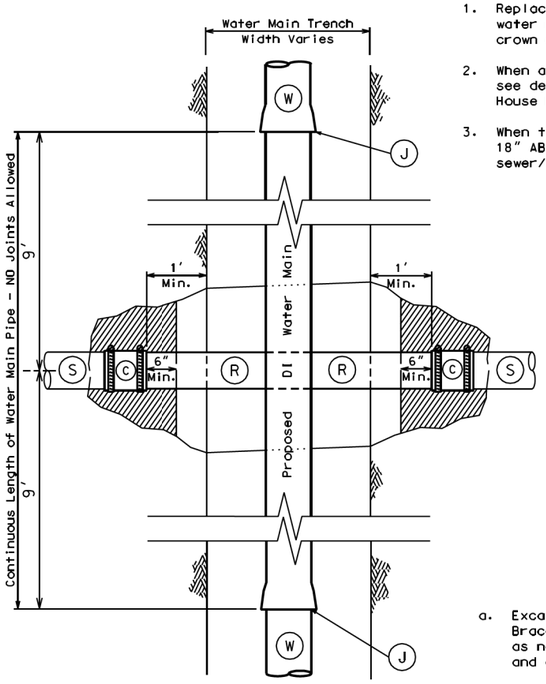


PLAN
No Scale

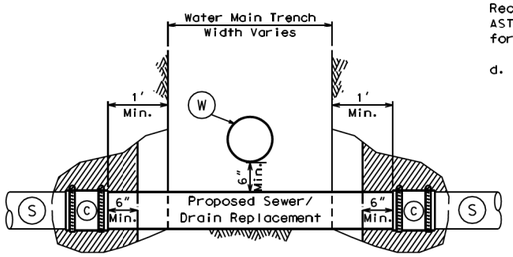


PROFILE THROUGH SEWER/DRAIN
No Scale

GENERAL NOTES

1. Replace the sewer/drain when the invert of the water main is LESS than 18" ABOVE the crown of the sewer/drain.
2. When a water main crosses UNDER a sewer/drain, see detail "Water Mains Crossing Under Sewers & House Drains."
3. When the invert of the water main is MORE than 18" ABOVE the crown of the sewer/drain, no sewer/drain replacement is required.

KEY TO SYMBOLS

- (W) Proposed DI Water Main
- (J) Proposed DI Water Main Joint (Continuous Pipe Between Joints)
- (S) Existing Sewer or House Drain
- (R) Proposed Sewer/Drain Replacement
- (C) Proposed ASTM C1173 Flexible Transition Coupling for Sewer Piping
- Proposed Bentonite Seal
- Undisturbed Soil

SEWER/DRAIN REPLACEMENT NOTES

a. Excavate as needed to replace sewer/drain. Brace and shore trenches and excavations as needed to provide safe working conditions and comply with applicable requirements.

b. Cut existing sewer/drain to remove section to be replaced; breaking or cracking is not allowed.

c. Replace the sewer/drain with a continuous length of ductile iron pipe, the same size as the sewer/drain, cut to fit. Reconnect the sewer/drain with ASTM C1173 Flexible Transition Couplings for Sewer Pipe.

d. Encase the couplings in medium bentonite chips (1/4" - 3/8") mixed with enough clean water to form a stiff clay. Pack the excavations surrounding the couplings to seal off leaks.

e. Center a length of water main pipe (18' typically) over the sewer/drain crossing.

f. Except where bentonite seals are shown, backfill using typical standards.

g. Comply with IL EPA requirements (modified and approved by IL EPA November 13, 2007).

Rev:11.07

WATER MAINS CROSSING OVER
SEWERS & HOUSE DRAINS

D-19
SHT. 1 OF 2

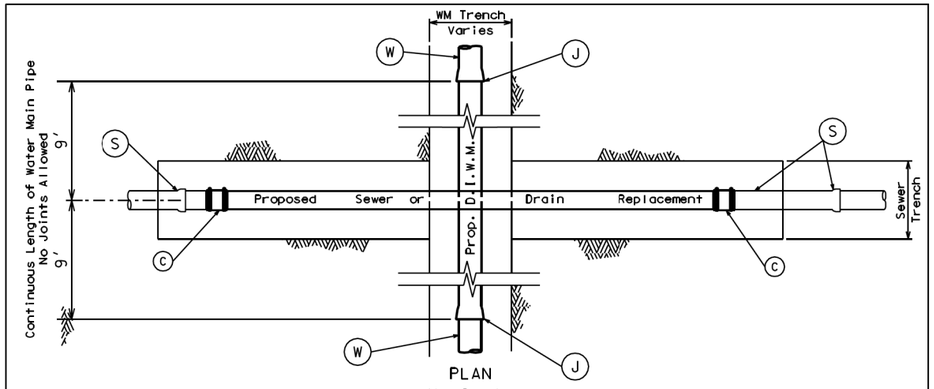


PLAN
No Scale

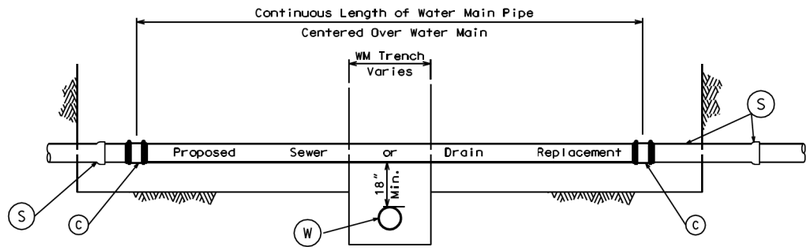


PROFILE THROUGH SEWER/DRAIN
No Scale

GENERAL NOTES

1. Replace the sewer/drain in all cases when a water main crosses UNDER the sewer/drain.
2. When a water main crosses OVER a sewer/drain, see detail "Water Mains Crossing Over Sewers & House Drains."

KEY TO SYMBOLS

- (W) Proposed DI Water Main
- (J) Proposed DI Water Main Joint (Continuous Pipe Between Joints)
- (S) Existing Sewer or House Drain
- (R) Proposed Sewer/Drain Replacement
- (C) Proposed ASTM C1173 Flexible Transition Coupling for Sewer Piping
- Undisturbed Soil

SEWER/DRAIN REPLACEMENT NOTES

a. Minimum clearance between the crown of the water main and the invert of the sewer/drain is 18".

b. Excavate as needed to replace sewer/drain. Brace and shore trenches and excavations as needed to provide safe working conditions and comply with applicable requirements.

c. Cut existing sewer/drain to remove section to be replaced; breaking or cracking is not allowed.

d. Replace the sewer/drain with a continuous length of ductile iron pipe, the same size as the sewer/drain, cut to fit. Reconnect the sewer/drain with ASTM C1173 Flexible Transition Couplings for Sewer Pipe.

e. Center a length of water main pipe (18' typically) under the sewer/drain crossing.

f. Backfill using typical standards.

g. Comply with IL EPA requirements.

REV:11.07

WATER MAINS CROSSING UNDER
SEWERS & HOUSE DRAINS

D-19
SHT. 2 OF 2

PLOT DATE: 4/9/2021
PLOT SCALE: 480.0000 ' / ft.
FILE NAME: pw:\\civil-pw-int.civiltech.local:Civiltech Projects\Documents\Projects\3153\CAD\Sheets\Water Main\Detail Sheets\sht-wm-D09.dgn

| | | | | |
|---|---|---|---|---|
| DESIGN: CZ | | | | |
| DRAWN: CZ | | | | |
| CHECKED: DM | | | | |
| APPROVED: | NO. | BY | DATE | DESCRIPTION |
| DATE: 01/22/2021 | REVISIONS | | | |

CDOT CHICAGO DEPARTMENT OF TRANSPORTATION

C*NECT

WATER MAIN REPLACEMENT
CDWM WATER MAIN DETAILS
S. STONY ISLAND AVE.

JACKSON PARK MOBILITY IMPROVEMENTS

STA. N/A TO STA. N/A

| | | |
|---|---|---|
| CONTRACT NO. - | TOTAL SHEETS 1434 | SHEET NO. 683 |
| PROJECT NO. B-7-203 | DRAWING NO. WM-24 | |
| SCALE: NONE | | |

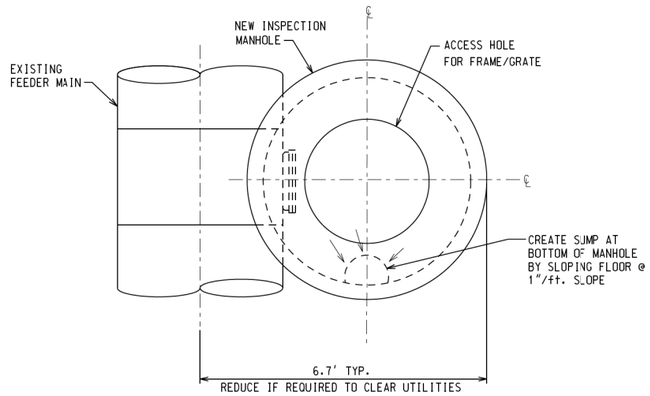


PLAN

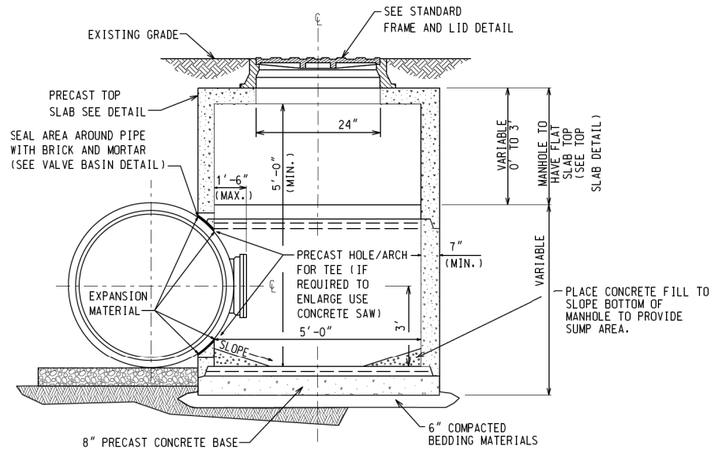


SECTIONAL VIEW

NOTE:
ALL OPENINGS IN BASIN SHALL BE SEALED WITH "NO SHRINK" GROUT.

REV:07.08

INSPECTION MANHOLE

FM-1

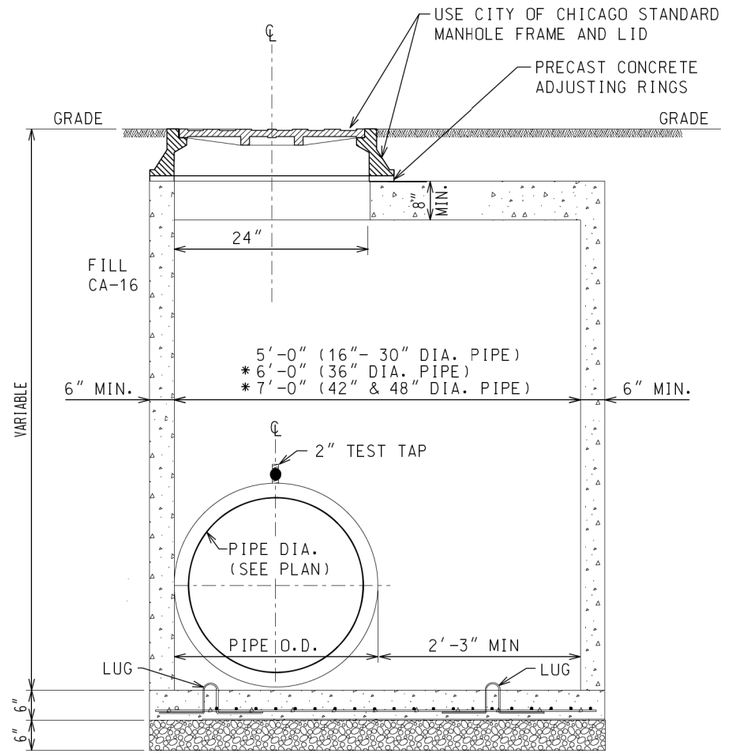


SECTIONAL VIEW
SCALE: N.T.S.

NOTE:

1. PROVIDE 6" THICK COMPACTED CA-16 BEDDING
2. USE PRECAST CONCRETE BASE OR PROVIDE 6" THICK IDOT CLASS 'SI' CONCRETE BASE POURED IN PLACE WITH #4 EPOXY COATED REBARS 4" C/C BOTH WAYS.
3. PROVIDE FOUR #4 REBAR LUGS FOR HANDLING. CUT THE LUGS AFTER PLACING THE SLAB IN POSITION.
4. PRECAST CONCRETE TOP SLAB TO BE USED WHERE HEAD ROOM IS REQUIRED.
5. THE LOCATION OF MANHOLE TO BE DETERMINED ON INDIVIDUAL BASIS.
* 6. OPENING ON TOP SLAB TO BE CENTERED OVER TEST TAP.

REV:04.15

PITOMETER TAP BASIN
PRECAST CONCRETE

FM-4

PLOT DATE: 4/9/2021
PLOT SCALE: 480.0000 ' / ft.
FILE NAME: pw:\cdot-pw-int.chiltech.local\Chiltech Projects\Documents\Projects\3153\CAD\Sheets\Water Main\Detail Sheets\sh-wm-d10.dgn

| | | | | | |
|---|---|---|---|---|---|
| DESIGN: CZ | | | | | |
| DRAWN: CZ | | | | | |
| CHECKED: DM | | | | | |
| APPROVED: | NO. | BY | DATE | DESCRIPTION | |
| DATE: 01/22/2021 | REVISIONS | | | | |

CDOT CHICAGO DEPARTMENT OF TRANSPORTATION

C*NECT

WATER MAIN REPLACEMENT
CDWM WATER MAIN DETAILS
S. STONY ISLAND AVE.

JACKSON PARK MOBILITY IMPROVEMENTS

STA. N/A TO STA. N/A

| | | | |
|---|---|---|---|
| CONTRACT NO. - | | TOTAL SHEETS | SHEET NO. |
| PROJECT NO. B-7-203 | | 1434 | 684 |
| SCALE: NONE | | DRAWING NO. WM-25 | |

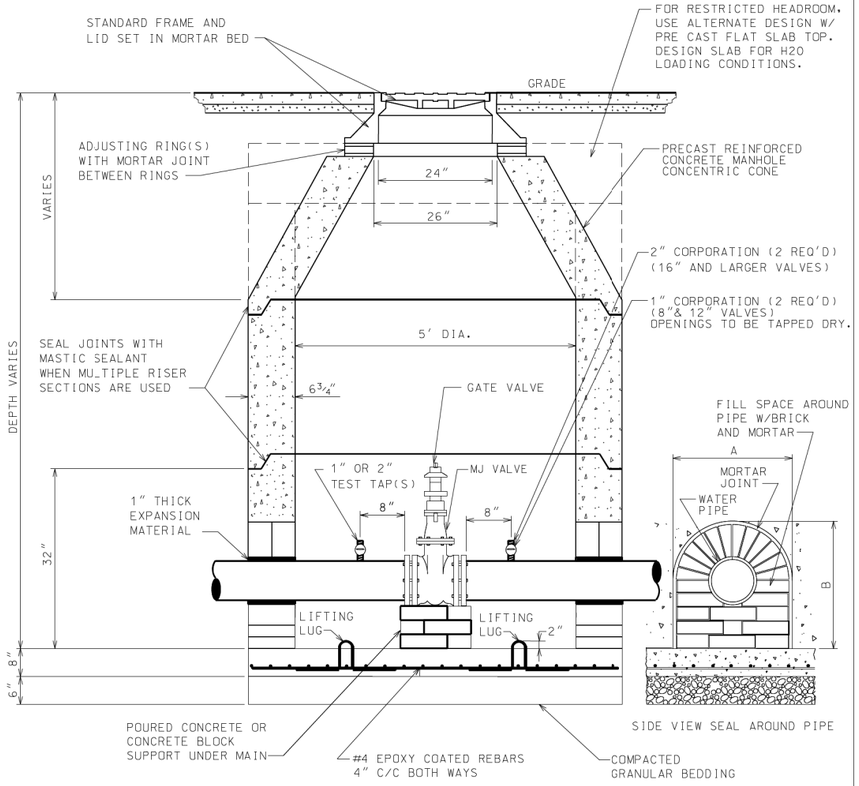


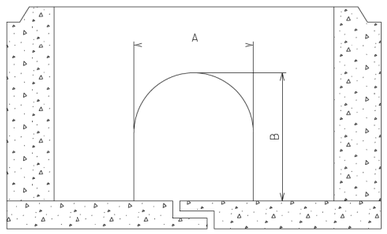


OPTIONAL SPLIT BOTTOM

| NOMINAL PIPE SIZES | OPENING DIMENSIONS | |
|---|---|---|
| | A | B |
| 8" | 11.0" | 12.5" |
| 12" | 15.5" | 16.5" |
| 16" | 19.5" | 21.0" |

# PRECAST VALVE BASIN FOR PIPES UP TO 16" DIA.

REV:09.15

D-13

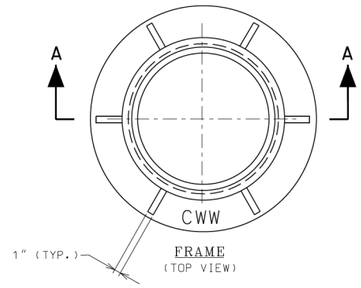


SECTION A-A

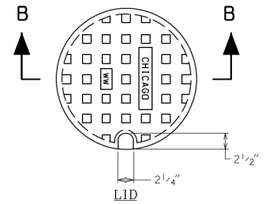


SECTION B-B

NOTES:

ALL FRAMES AND LIDS SHALL BE OF HEAVY DUTY TYPE DESIGN AND MEET AASHTO M105 AND M306 REQUIREMENTS FOR A 40,000 LB PROOF LOAD.

LETTERING FOR CHICAGO W.W. ON THE LID SHALL BE 2" SHARP FACE GOTHIC LETTERS, 3/16" WIDE AND RAISED 1/8" FROM 1/8" RECESS AS MEASURED FROM THE TOP SURFACE OF THE LID.

LETTERING FOR C.W.W. ON THE FRAME SHALL BE LOCATED ON THE TOP SURFACE OF THE HORIZONTAL FLANGE AND SHALL BE 1" SHARP FACE GOTHIC, 3/16" WIDE AND RAISED 1/8" AS MEASURED FROM THE FLANGE SURFACE. LOCATION OF LETTERING SHALL BE AS INDICATED ON DRAWING.

| FRAME AND LID DIMENSIONS | | |
|---|---|---|
| | FRAME AND LID TYPES | |
| | STANDARD | 36" SPECIAL F&L |
| DIMENSION | INCHES | INCHES |
| A | 24 | - |
| B | 22 7/8 - 23 | 36 |
| C | 21 | 34 |
| D | 9 | 8 1/2 |
| E | 24 1/2 - 24 13/16 | 36 |
| F | 34 | 45 |
| G | 22 3/4 | 36 |
| H | 3 | 1 1/2 |
| I | 4 5/8 - 4 3/4 | 4 1/2 |

# FRAME & LID

REV:11.15

D-15

PLOT DATE: 4/9/2021
PLOT SCALE: 480.0000 ' / ft.
FILE NAME: pw:\cdot-pw-int.dl\Rech.local:CivilTech Projects:Documents\Projects\3153\CAD\Sheets\Water Main\Detail Sheets\pt-wm-d11.dgn

| | | | | |
|---|---|---|---|---|
| DESIGN: CZ | | | | |
| DRAWN: CZ | | | | |
| CHECKED: DM | | | | |
| APPROVED: | NO. | BY | DATE | DESCRIPTION |
| DATE: 01/22/2021 | REVISIONS | | | |

CDOT CHICAGO DEPARTMENT OF TRANSPORTATION

C*NECT

WATER MAIN REPLACEMENT
CDWM WATER MAIN DETAILS
S. STONY ISLAND AVE.

JACKSON PARK MOBILITY IMPROVEMENTS

STA. N/A TO STA. N/A

| | |
|---|---|
| CONTRACT NO. - | TOTAL SHEETS 1434 / SHEET NO. 685 |
| PROJECT NO. B-7-203 | DRAWING NO. WM-26 |
| SCALE: NONE | |

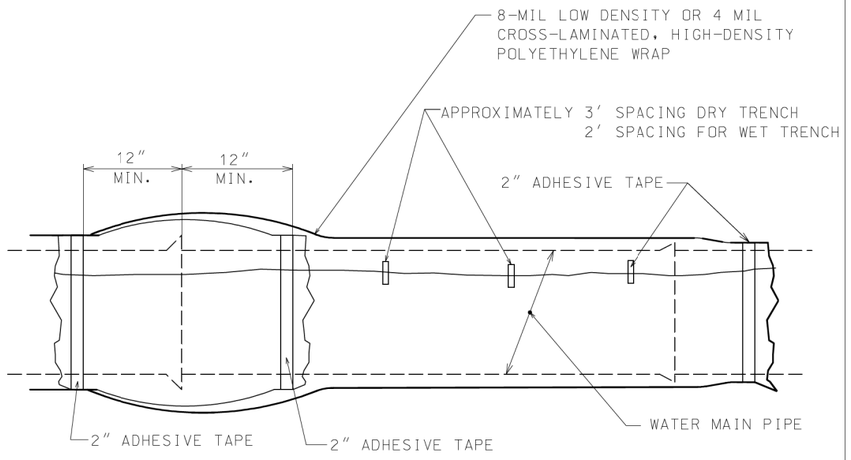


| CHART "A" POLYWRAP FLAT TUBE WIDTHS | | |
|---|---|---|
| PIPE DIAMETER (IN.) | D.I.P. WITH PUSH-ON JOINTS (IN.) | D.I.P. WITH MECHANICAL JOINTS (IN.) |
| 4 | 14 | 16 |
| 6 | 17 | 20 |
| 8 | 21 | 24 |
| 12 | 29 | 30 |
| 16 | 37 | 37 |
| 24 | 53 | 53 |

NOTES:

1. USE ONE LENGTH OF POLYETHYLENE TUBE WRAP FOR EACH LENGTH OF PIPE, OVERLAPPED AT PIPE JOINTS AND FOLD EXCESS OVER TOP OF TUBE FOR SLACK REDUCTION.
2. USE CHART "A" TO SELECT SIZE OF WRAP.

REV:06.10

WATER MAIN
POLYETHYLENE WRAP DETAIL

D-10

I. INSTALLATION

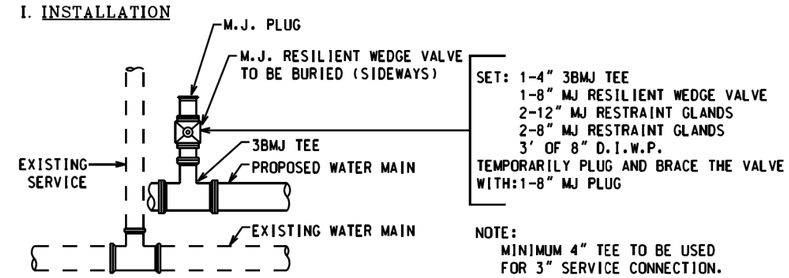


II. RECONNECTION

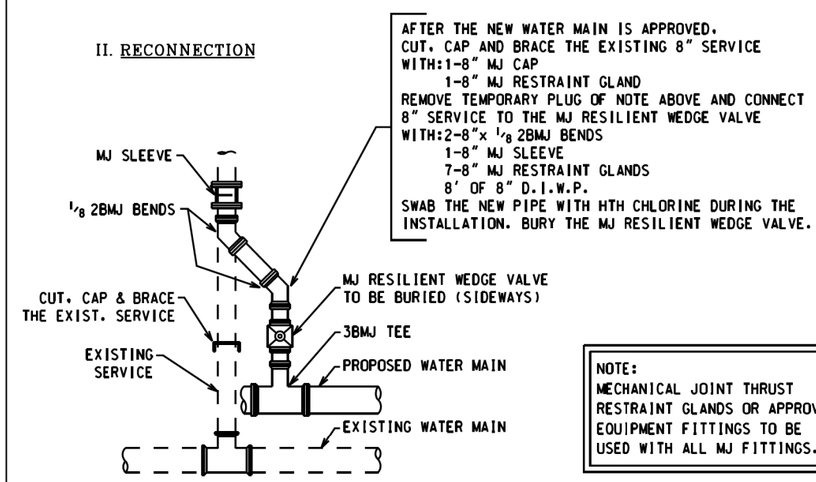


REV:04.07

TYPICAL SERVICE RECONNECTION 3" AND
LARGER USING M.J. RESILIENT WEDGE VALVE

D-30

PLOT DATE: 4/9/2021
PLOT SCALE: 480.0000 ' / ft.
FILE NAME: pw:\\civil-pw-int.civiltech.local:Civiltech Projects\Documents\Projects\3153\CAD\Sheets\Water Main\Detail Sheets\sht-wm-D12.dgn

| | | | | |
|---|---|---|---|---|
| DESIGN: CZ | | | | |
| DRAWN: CZ | | | | |
| CHECKED: DM | | | | |
| APPROVED: | NO. | BY | DATE | DESCRIPTION |
| DATE: 01/22/2021 | REVISIONS | | | |

CDOT CHICAGO DEPARTMENT OF TRANSPORTATION

C*NECT

WATER MAIN REPLACEMENT
CDWM WATER MAIN DETAILS
S. STONY ISLAND AVE.

JACKSON PARK MOBILITY IMPROVEMENTS

STA. N/A TO STA. N/A

| | | |
|---|---|---|
| CONTRACT NO. - | TOTAL SHEETS 1434 | SHEET NO. 686 |
| PROJECT NO. B-7-203 | DRAWING NO. WM-27 | |
| SCALE: NONE | | |

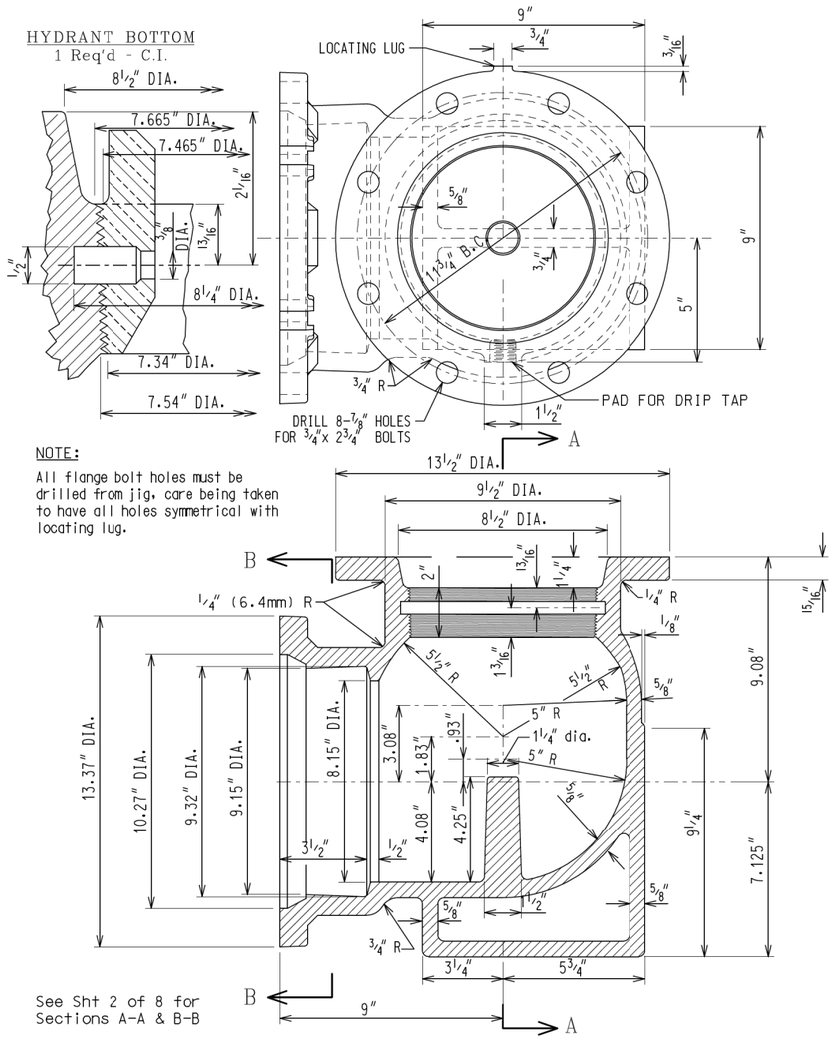


HYDRANT BOTTOM

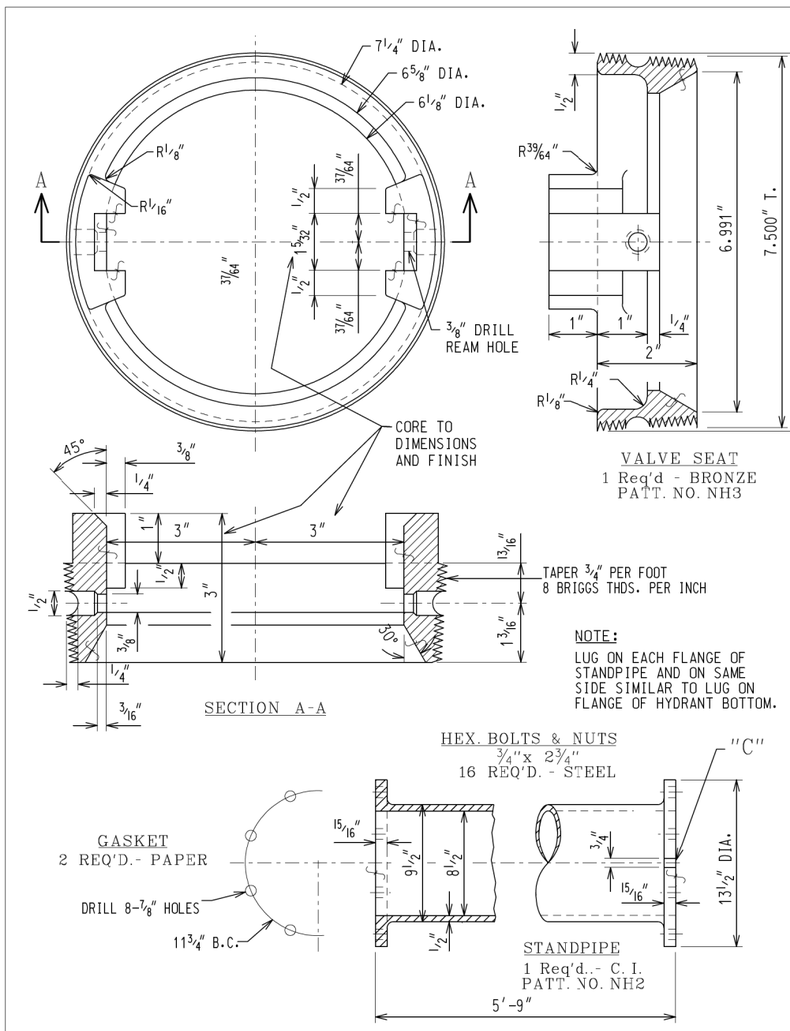


VALVE SEAT
1 Req'd - BRONZE
PATT. NO. NH3




VALVE SEAT, STANDPIPE & GASKET

REV:04.07

CHICAGO FIRE HYDRANT DETAIL

D-1
SHT. 3 OF 8

REV:04.07

CHICAGO FIRE HYDRANT DETAIL

D-1
SHT. 4 OF 8

PLOT DATE: 4/9/2021
PLOT SCALE: 480.0000 ' / ft.
FILE NAME: pw:\cdot-pw-int.civiltech.local\Civiltech Projects\Documents\Projects\3153\CAD\Sheets\Water Main\Detail Sheets\sht-wm-013.dgn

| | | | | |
|---|---|---|---|---|
| DESIGN: CZ | | | | |
| DRAWN: CZ | | | | |
| CHECKED: DM | | | | |
| APPROVED: | NO. | BY | DATE | DESCRIPTION |
| DATE: 01/22/2021 | REVISIONS | | | |

CDOT CHICAGO DEPARTMENT OF TRANSPORTATION

C★NECT

WATER MAIN REPLACEMENT
CDWM WATER MAIN DETAILS
S. STONY ISLAND AVE.

JACKSON PARK MOBILITY IMPROVEMENTS

STA. N/A TO STA. N/A

| | |
|---|---|
| CONTRACT NO. - | TOTAL SHEETS 1434 |
| PROJECT NO. B-7-203 | SHEET NO. 687 |
| SCALE: NONE | DRAWING NO. WM-28 |

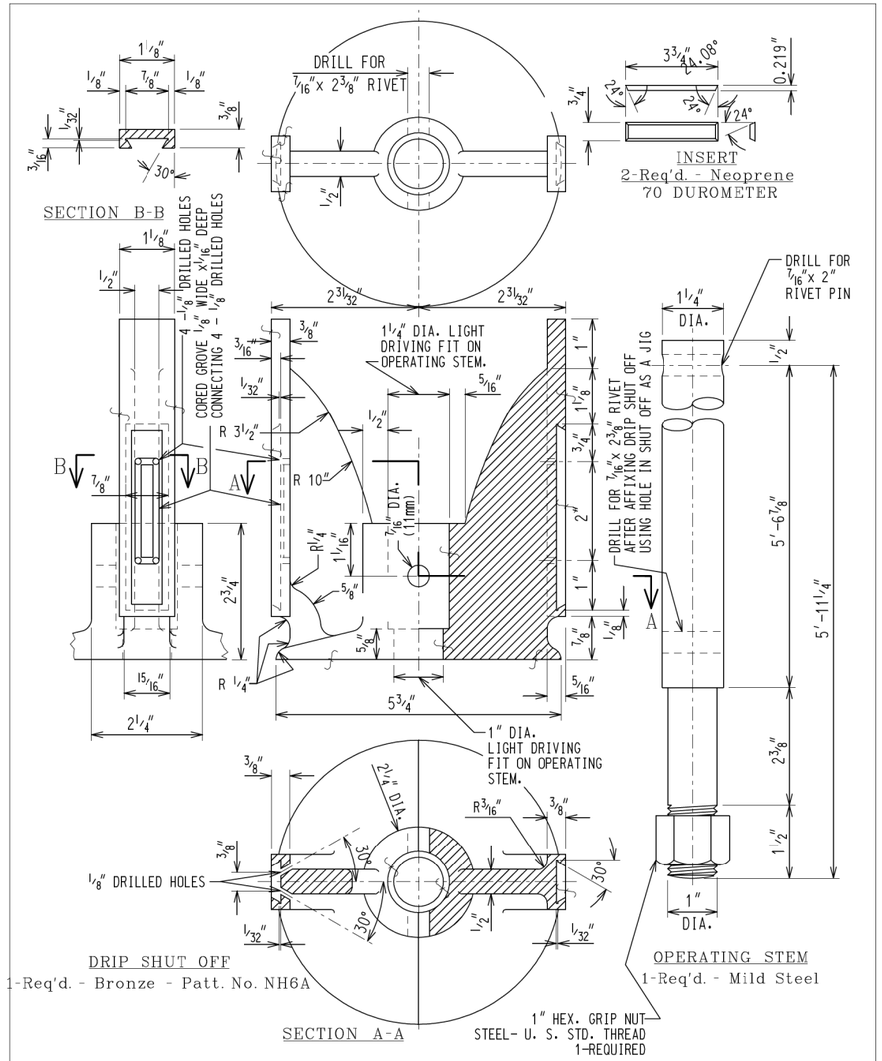


DRIP SHUT-OFF & OPERATING STEM

REV:04.07 CHICAGO FIRE HYDRANT DETAIL D-1 SHT. 5 OF 8

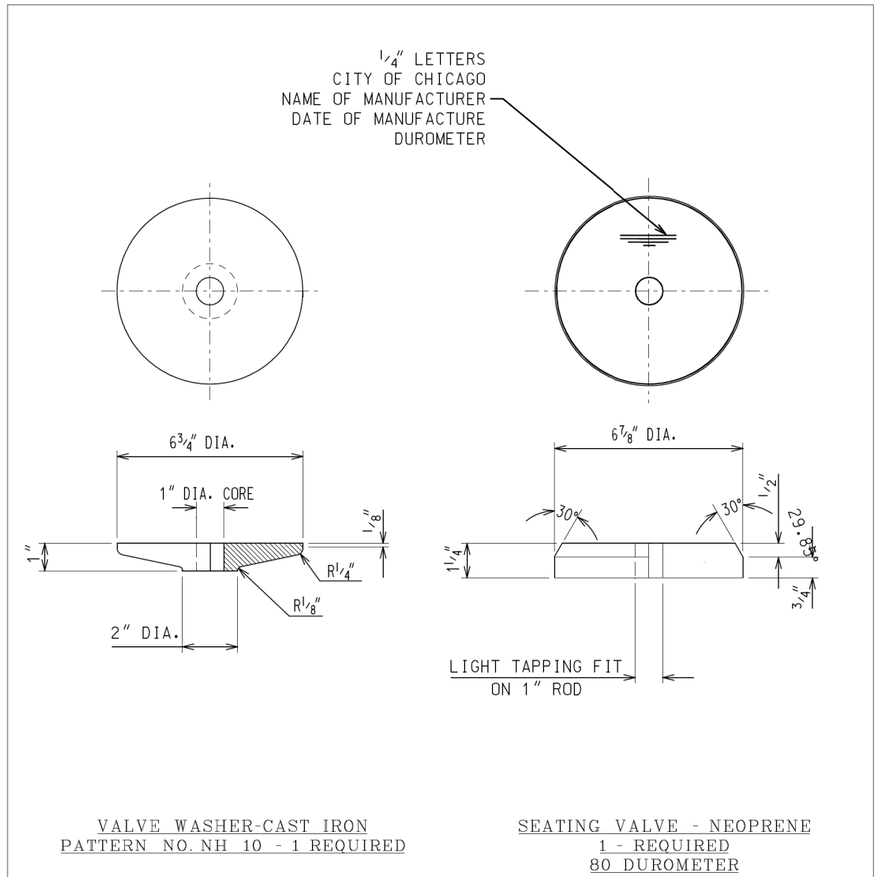


VALVE WASHER-CAST IRON
PATTERN NO. NH 10 - 1 REQUIRED

SEATING VALVE - NEOPRENE
1 - REQUIRED
80 DUROMETER

VALVE WASHER & SEATING VALVE

REV:04.07 CHICAGO FIRE HYDRANT DETAIL D-1 SHT. 6 OF 8

PLOT DATE: 4/9/2021
PLOT SCALE: 480.0000 ' / ft.
FILE NAME: pw:\\civil-pw-int.civiltech.local:Civiltech Projects\Documents\Projects\3153\CAD\Sheets\Water Main\Detail Sheets\sht-wm-D14.dgn

| | | | | |
|---|---|---|---|---|
| DESIGN: CZ | | | | |
| DRAWN: CZ | | | | |
| CHECKED: DM | | | | |
| APPROVED: | NO. | BY | DATE | DESCRIPTION |
| DATE: 01/22/2021 | REVISIONS | | | |

CDOT CHICAGO DEPARTMENT OF TRANSPORTATION

C*NECT

WATER MAIN REPLACEMENT
CDWM WATER MAIN DETAILS
S. STONY ISLAND AVE.

JACKSON PARK MOBILITY IMPROVEMENTS

STA. N/A TO STA. N/A

| | | |
|---|---|---|
| CONTRACT NO. - | TOTAL SHEETS 1434 | SHEET NO. 688 |
| PROJECT NO. B-7-203 | DRAWING NO. WM-29 | |
| SCALE: NONE | | |

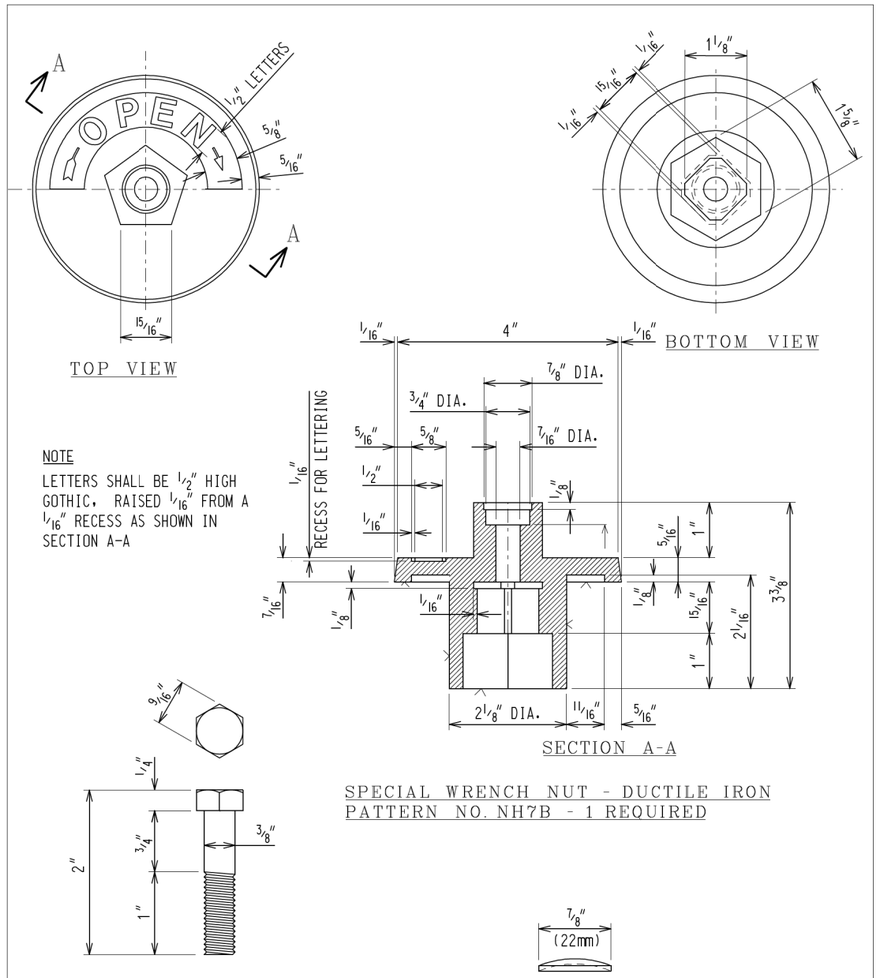


NOTE

LETTERS SHALL BE 1/2" HIGH GOTHIC, RAISED 1/16" FROM A 1/16" RECESS AS SHOWN IN SECTION A-A

SPECIAL WRENCH NUT - DUCTILE IRON
PATTERN NO. NH7B - 1 REQUIRED

CAP SCREW-STAINLESS STL.
HEX. HEAD TYPE 300 SERIES
1-Req'd.

FROST PLUG - STAINLESS STEEL
7/8" STANDARD - REQ.

SPECIALTY WRENCH NUT, CAP SCREW & FROST PLUG DETAILS

REV:04.07

CHICAGO FIRE HYDRANT DETAIL

D-1
SHT. 7 OF 8

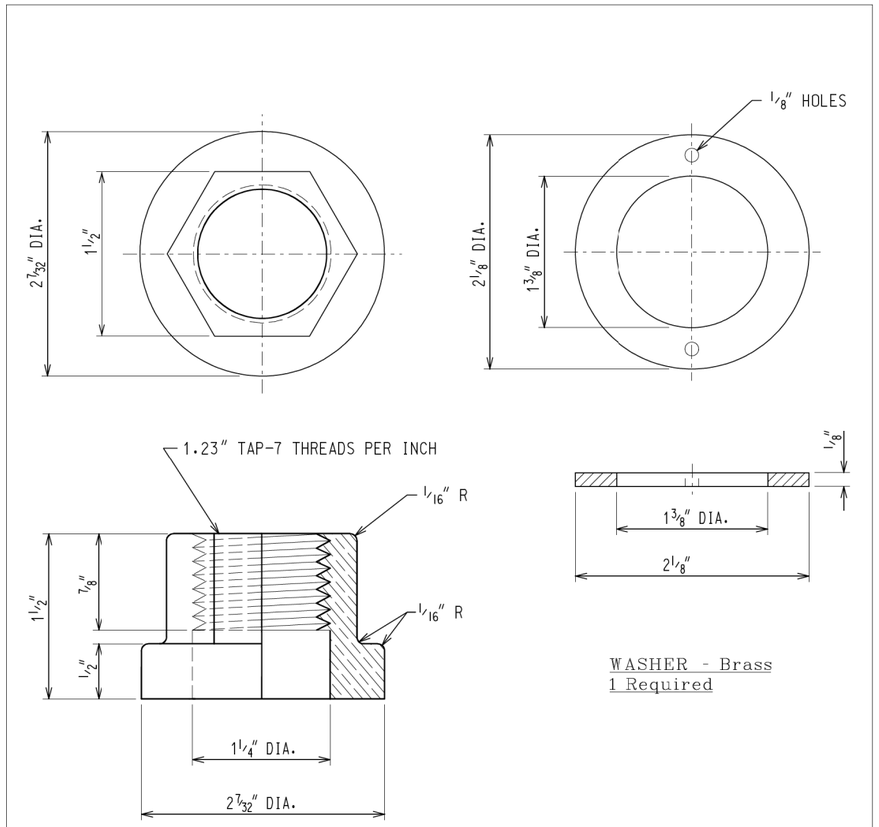


WASHER - Brass
1 Required

STUFFING BOX NUT - Bronze
PATTERN NO. NH 8 - 1 Required

STUFFING BOX NUT & WASHER DETAILS

REV:04.07

CHICAGO FIRE HYDRANT DETAIL

D-1
SHT. 8 OF 8

PLOT DATE: 4/9/2021
PLOT SCALE: 480.0000 ' / ft.
FILE NAME: pw:\\cdot\pw-int.civiltech.local:Civiltech Projects\Documents\Projects\3153\CAD\Sheets\Water Main\Detail Sheets\sht-wm-D15.dgn

| | | | | |
|---|---|---|---|---|
| DESIGN: CZ | | | | |
| DRAWN: CZ | | | | |
| CHECKED: DM | | | | |
| APPROVED: | NO. | BY | DATE | DESCRIPTION |
| DATE: 01/22/2021 | REVISIONS | | | |

CDOT CHICAGO DEPARTMENT OF TRANSPORTATION

C*NECT

WATER MAIN REPLACEMENT
CDWM WATER MAIN DETAILS
S. STONY ISLAND AVE.

JACKSON PARK MOBILITY IMPROVEMENTS

STA. N/A TO STA. N/A

| | | |
|---|---|---|
| CONTRACT NO. - | TOTAL SHEETS 1434 | SHEET NO. 689 |
| PROJECT NO. B-7-203 | DRAWING NO. WM-30 | |
| SCALE: NONE | | |

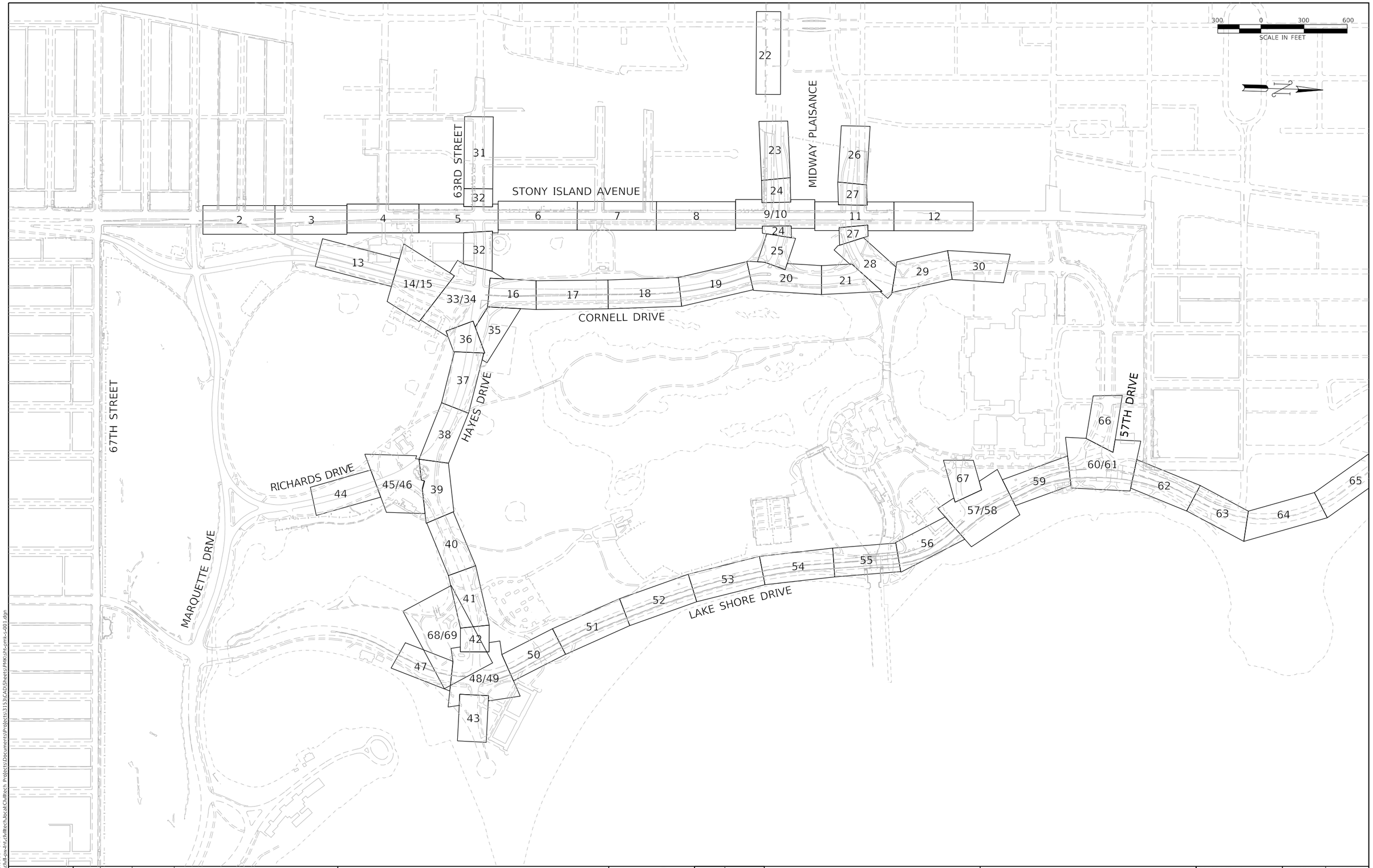


| | | | | |
|---|---|---|---|---|
| DESIGN: MG | | | | |
| DRAWN: MG | | | | |
| CHECKED: DM | | | | |
| APPROVED: | NO. | BY | DATE | DESCRIPTION |
| DATE: 01/22/2021 | REVISIONS | | | |

CDOT CHICAGO DEPARTMENT OF TRANSPORTATION

C*NECT

**PAVEMENT MARKING AND SIGNING**
**EXISTING & PROPOSED CONDITIONS**
**KEY PLAN**

**JACKSON PARK MOBILITY IMPROVEMENTS**

STA. TO STA.

| | |
|---|---|
| CONTRACT NO. - | TOTAL SHEETS 1434 |
| PROJECT NO. B-7-203 | SHEET NO. 690 |
| SCALE: 1"=300' | DRAWING NO. PMK-1 |

PLOT DATE: 2/15/2021
PLOT SCALE: 600.0000 ' / in.
FILE NAME: pw:\\civil-pw-lnc.civiltech.local:CivilTech Projects\Documents\Projects\3153\CAD\Sheets\PMK\ph-pmk-s-001.dgn

## EXISTING CONDITIONS

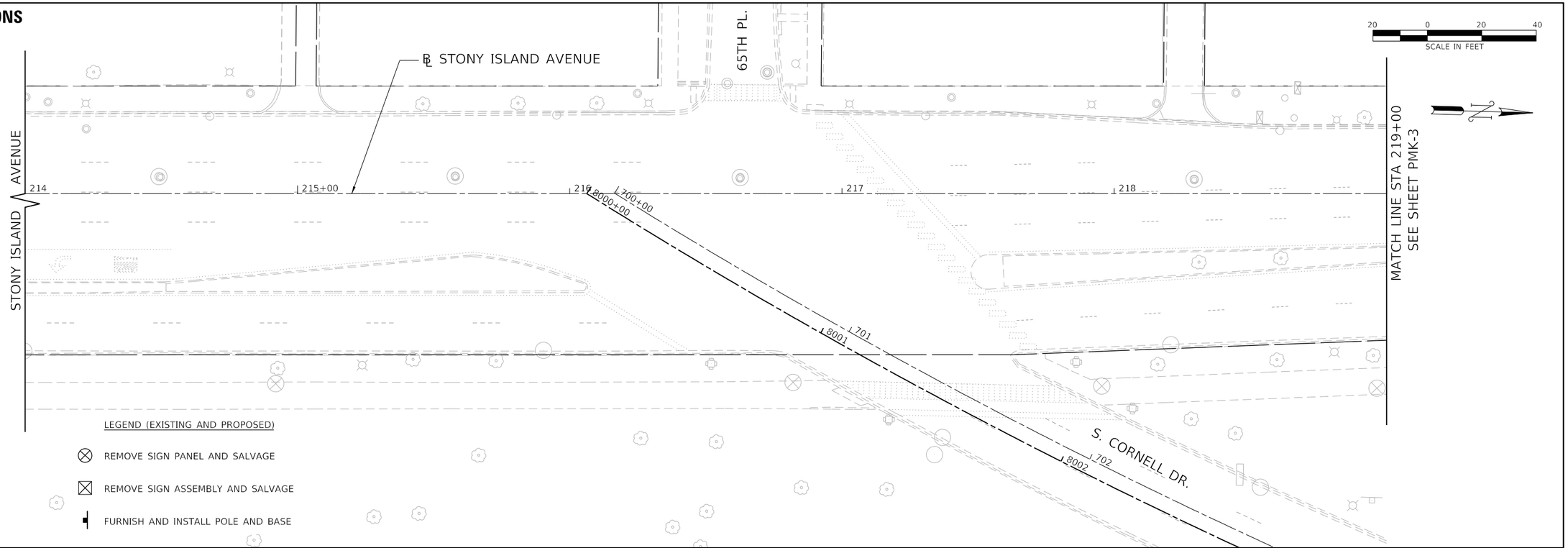


## PROPOSED CONDITIONS

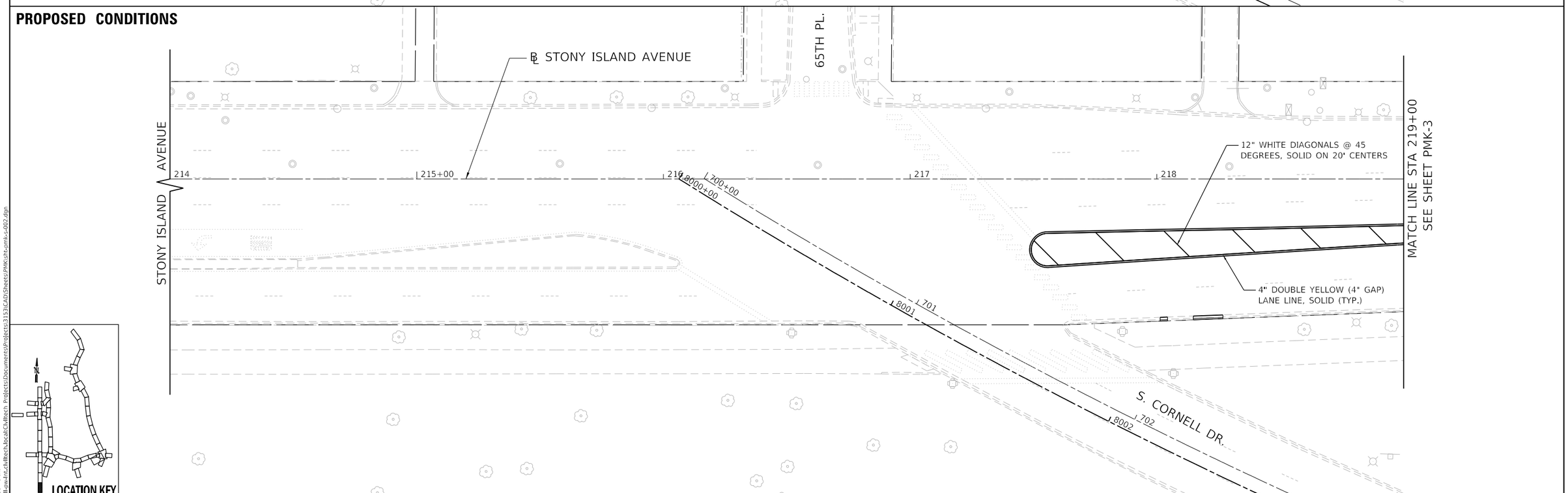





LOCATION KEY

| | | | | |
|---|---|---|---|---|
| DESIGN: MG | | | SREV3 | |
| DRAWN: MG | | | SREV2 | |
| CHECKED: DM | | | SREV1 | |
| APPROVED: | NO. | BY | DATE | DESCRIPTION |
| DATE: 01/22/2021 | REVISIONS | | | |

CDOT CHICAGO DEPARTMENT OF TRANSPORTATION

C*NECT

PAVEMENT MARKING AND SIGNING
EXISTING & PROPOSED CONDITIONS
S. STONY ISLAND AVE.

JACKSON PARK MOBILITY IMPROVEMENTS

STA. 214+00 TO STA. 219+00

CONTRACT NO. -
PROJECT NO. B-7-203
SCALE: 1"=20'

| TOTAL SHEETS | SHEET NO. |
|---|---|
| 1434 | 691 |

DRAWING NO. PMK-2

PLOT DATE: 2/15/2021
PLOT SCALE: 40.0000 ' / in.
FILE NAME: pw:\\cdot-pw-int.civiltech.local:Civiltech Projects\Documents\Projects\3153\CAD\Sheets\PMK\sht-pmk-s-002.dgn

## EXISTING CONDITIONS

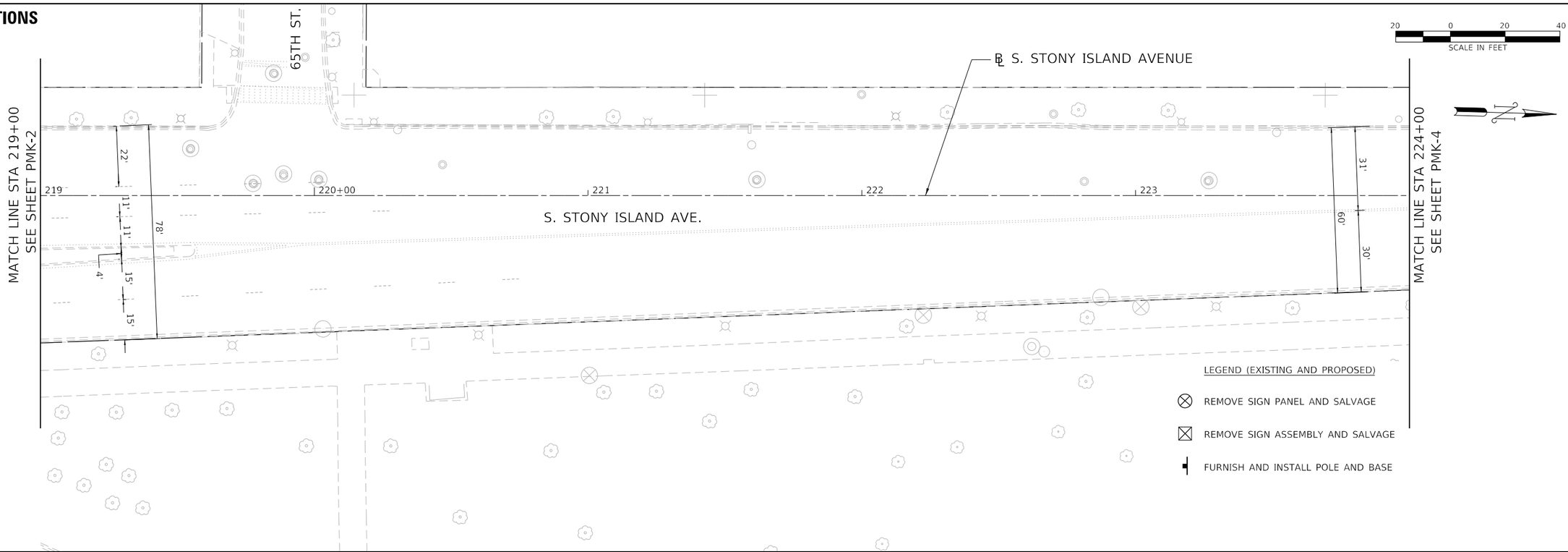


## PROPOSED CONDITIONS

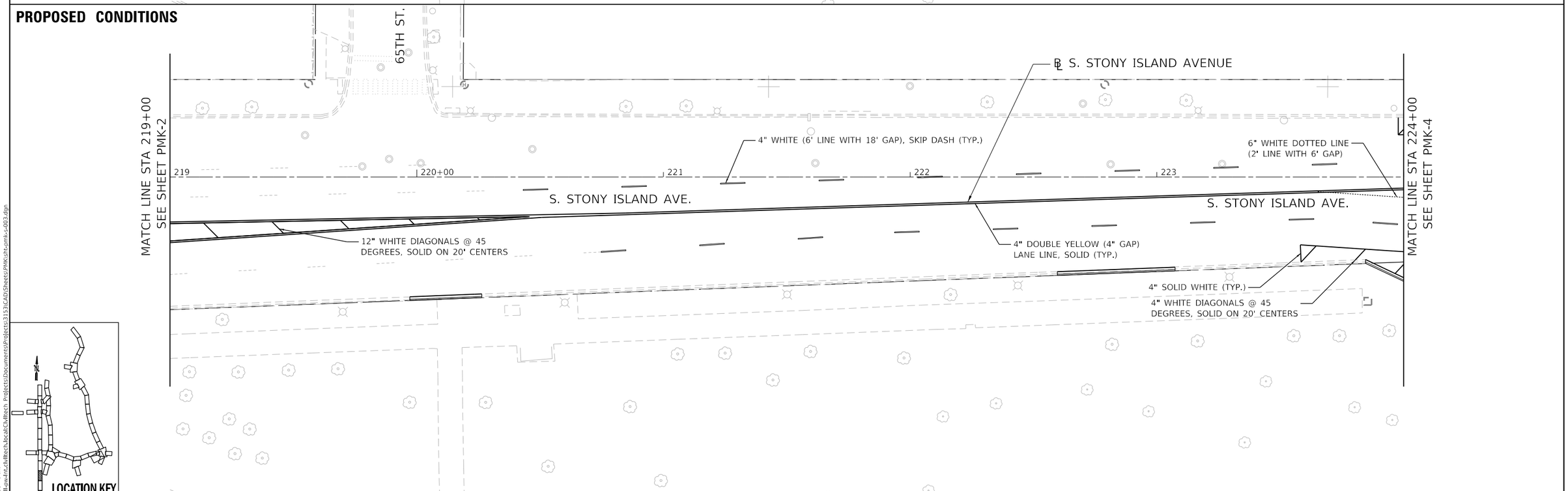





LOCATION KEY

PLOT DATE: 2/15/2021
PLOT SCALE: 40.0000 ' / in.
FILE NAME: pw:\\civil-pw-int.civiltech.local:Civiltech Projects\Documents\Projects\3153\CAD\Sheets\PMK\sht-pmk-s-003.dgn

| | | | | | |
|---|---|---|---|---|---|
| DESIGN: | MG | | | $REV3 | |
| DRAWN: | MG | | | $REV2 | |
| CHECKED: | DM | | | $REV1 | |
| APPROVED: | | NO. | BY | DATE | DESCRIPTION |
| DATE: 01/22/2021 | | REVISIONS | | | |

CDOT CHICAGO DEPARTMENT OF TRANSPORTATION

C*NECT

PAVEMENT MARKING AND SIGNING
EXISTING & PROPOSED CONDITIONS
S. STONY ISLAND AVE.

JACKSON PARK MOBILITY IMPROVEMENTS

STA. 219+00 TO STA. 224+00

CONTRACT NO. -
PROJECT NO. B-7-203
SCALE: 1"=20'

| TOTAL SHEETS | SHEET NO. |
|---|---|
| 1434 | 692 |

DRAWING NO. PMK-3

## EXISTING CONDITIONS

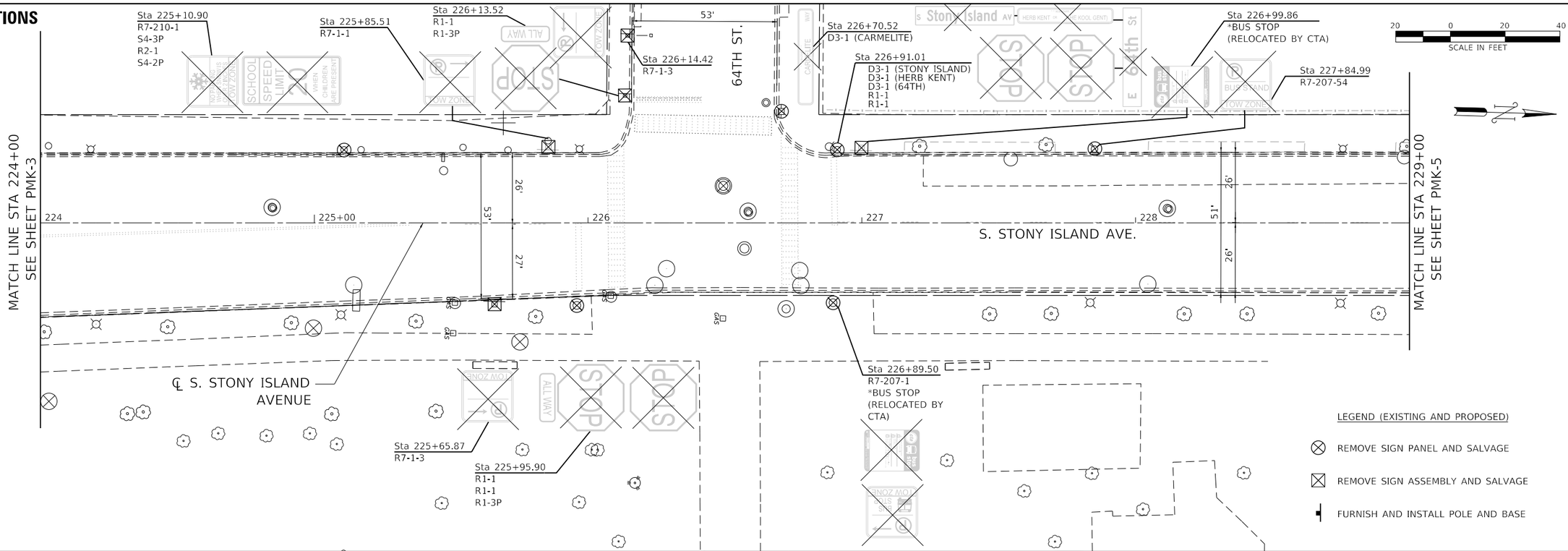


## PROPOSED CONDITIONS

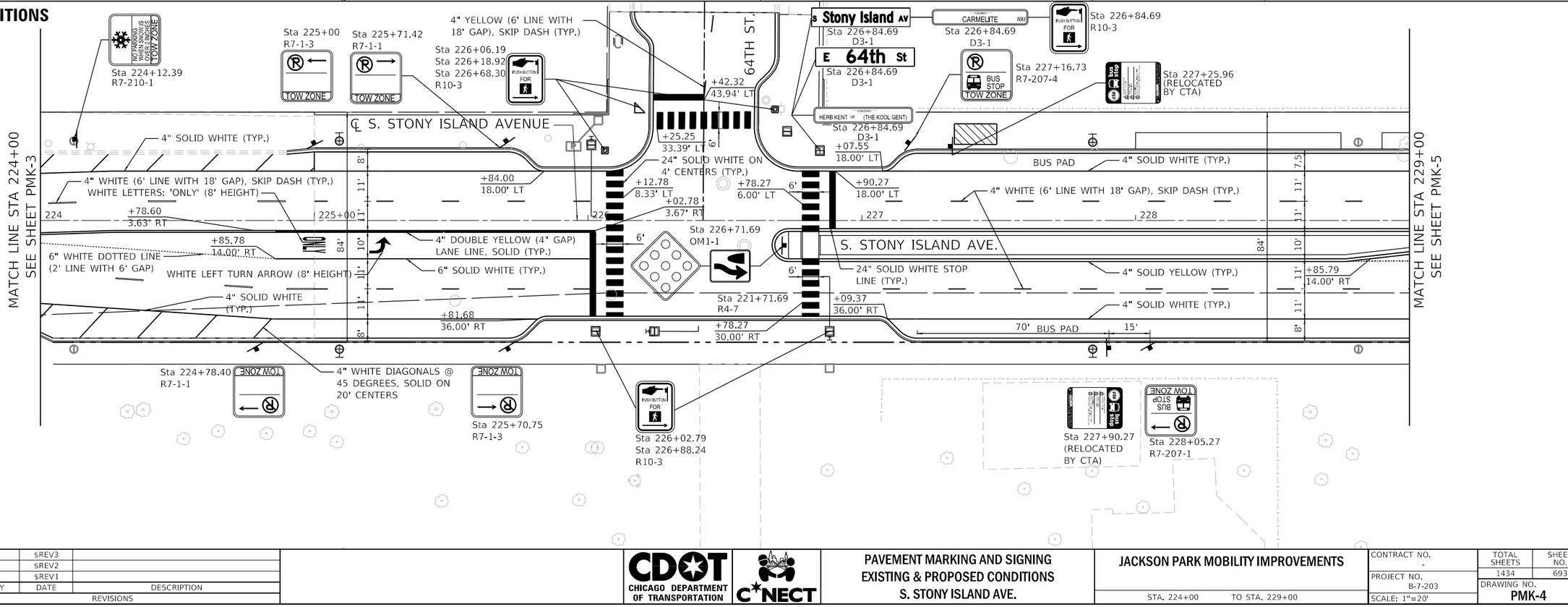


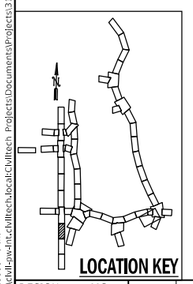


| | | | | | |
|---|---|---|---|---|---|
| DESIGN: MG | | | | $REV3 | |
| DRAWN: MG | | | | $REV2 | |
| CHECKED: DM | | | | $REV1 | |
| APPROVED: | NO. | BY | DATE | DESCRIPTION | |
| DATE: 01/22/2021 | REVISIONS | | | | |

CDOT CHICAGO DEPARTMENT OF TRANSPORTATION

C⁺NECT

**PAVEMENT MARKING AND SIGNING**
**EXISTING & PROPOSED CONDITIONS**
**S. STONY ISLAND AVE.**

**JACKSON PARK MOBILITY IMPROVEMENTS**

STA. 224+00 TO STA. 229+00

| | |
|---|---|
| CONTRACT NO. | - |
| PROJECT NO. | B-7-203 |
| SCALE: 1"=20' | |

| TOTAL SHEETS | SHEET NO. |
|---|---|
| 1434 | 693 |
| DRAWING NO. | PMK-4 |

PLOT DATE: 2/15/2021
PLOT SCALE: 40.0000 ' / in.
FILE NAME: pw:\cdot-pw-int.civiltech.local:CivilTech Projects\Documents\Projects\3153\CAD\Sheets\PMK\int-cmk-s-004.dgn

## EXISTING CONDITIONS

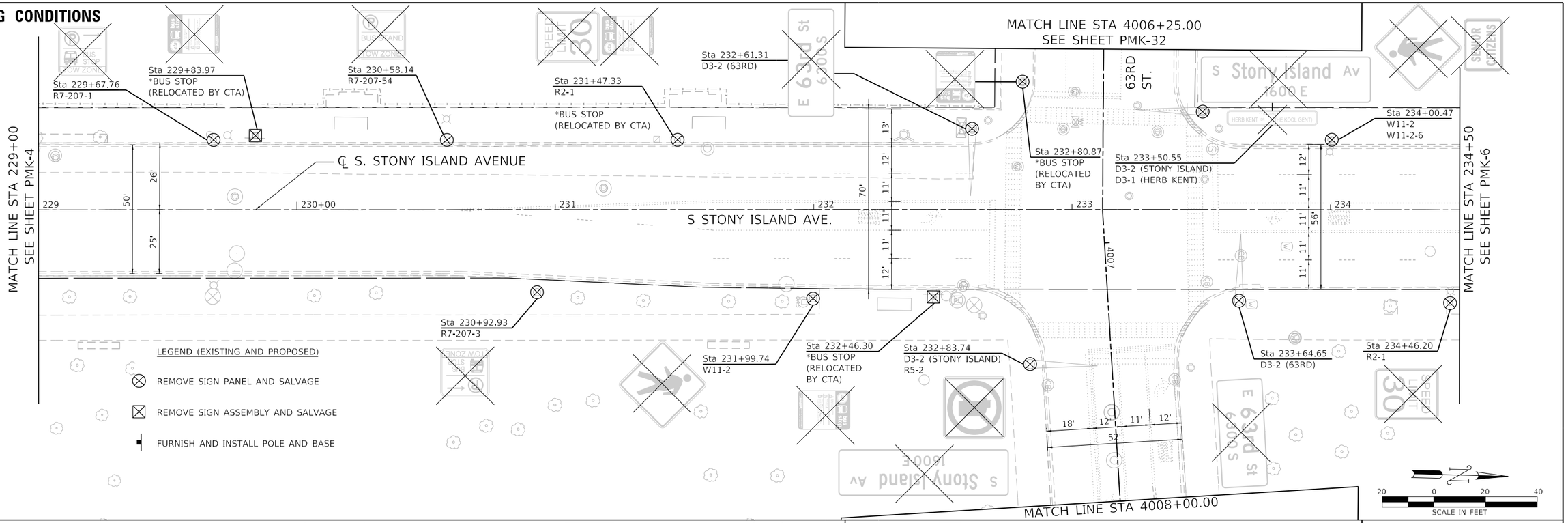


## PROPOSED CONDITIONS

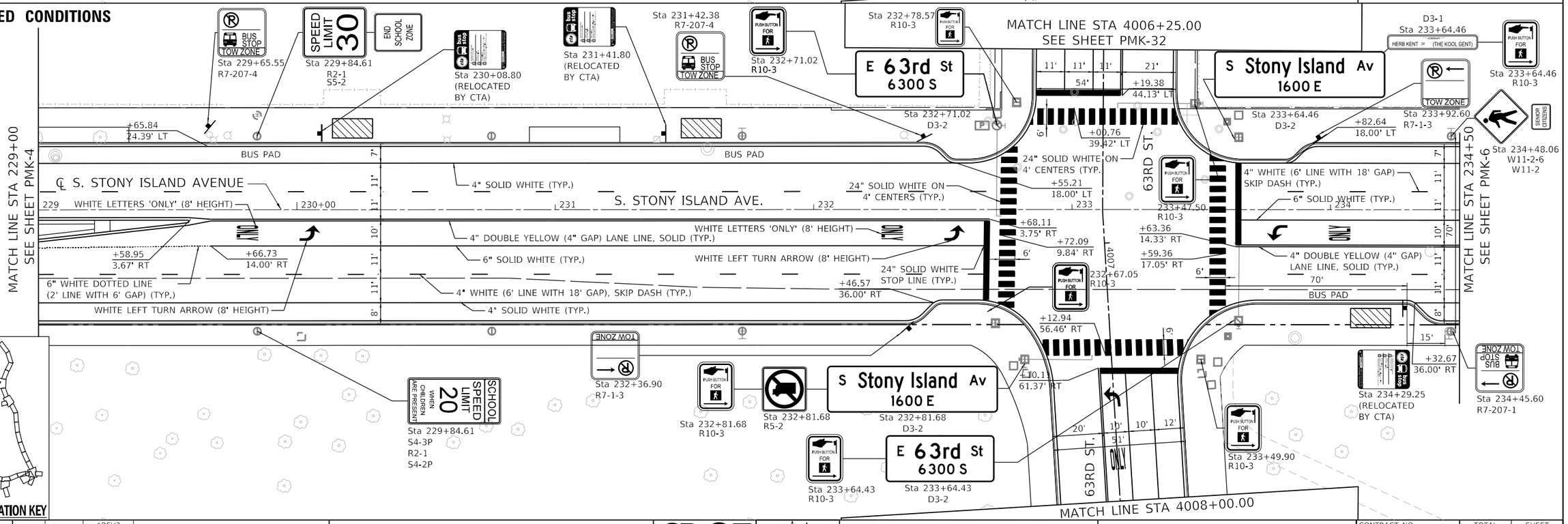


| | | | | | |
|---|---|---|---|---|---|
| DESIGN: | MG | | | $REV3 | |
| DRAWN: | MG | | | $REV2 | |
| CHECKED: | DM | | | $REV1 | |
| APPROVED: | | NO. | BY | DATE | DESCRIPTION |
| DATE: | 01/22/2021 | REVISIONS | | | |

CDOT CHICAGO DEPARTMENT OF TRANSPORTATION

C*NECT

**PAVEMENT MARKING AND SIGNING**
**EXISTING & PROPOSED CONDITIONS**
**S. STONY ISLAND AVE.**

**JACKSON PARK MOBILITY IMPROVEMENTS**

STA. 229+00 TO STA. 234+50

| | |
|---|---|
| CONTRACT NO. | - |
| PROJECT NO. | B-7-203 |
| SCALE: | 1"=20' |

| TOTAL SHEETS | SHEET NO. |
|---|---|
| 1434 | 694 |

DRAWING NO. **PMK-5**

PLOT DATE: 2/15/2021
PLOT SCALE: 40.0000 ' / in.
FILE NAME: pw:\\cdot-pw-int-civiltech.bentley.com:CivilTech Projects\Documents\Projects\3153\CADD\Sheets\PMK\cdt-pmk-s-005.dgn

## EXISTING CONDITIONS

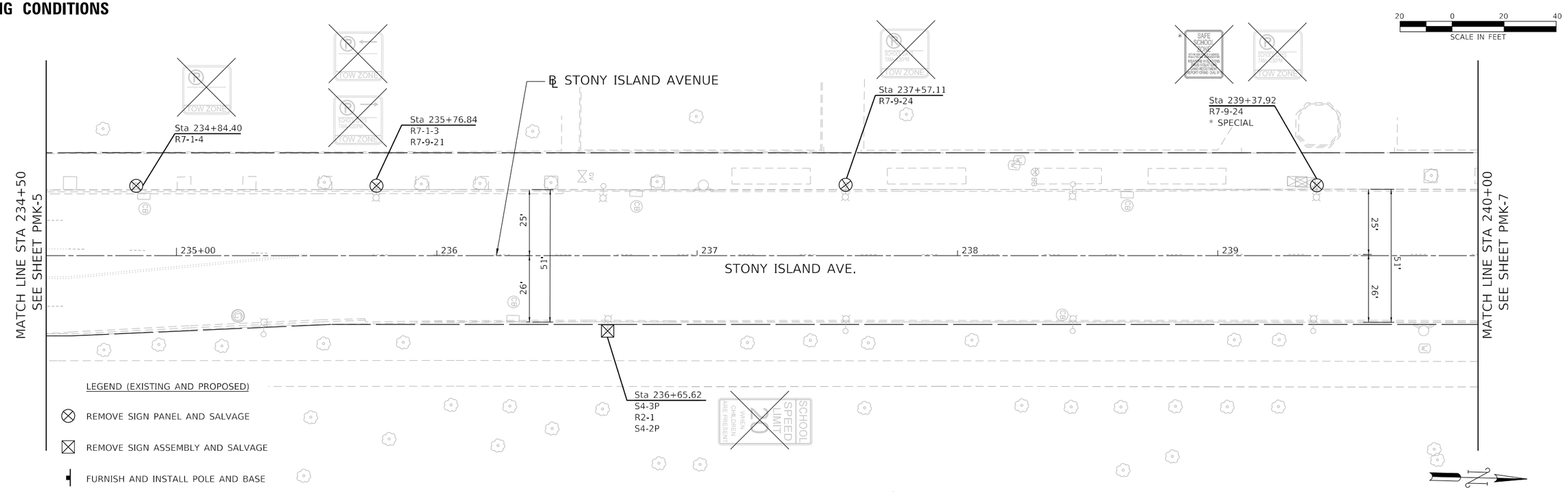


## PROPOSED CONDITIONS

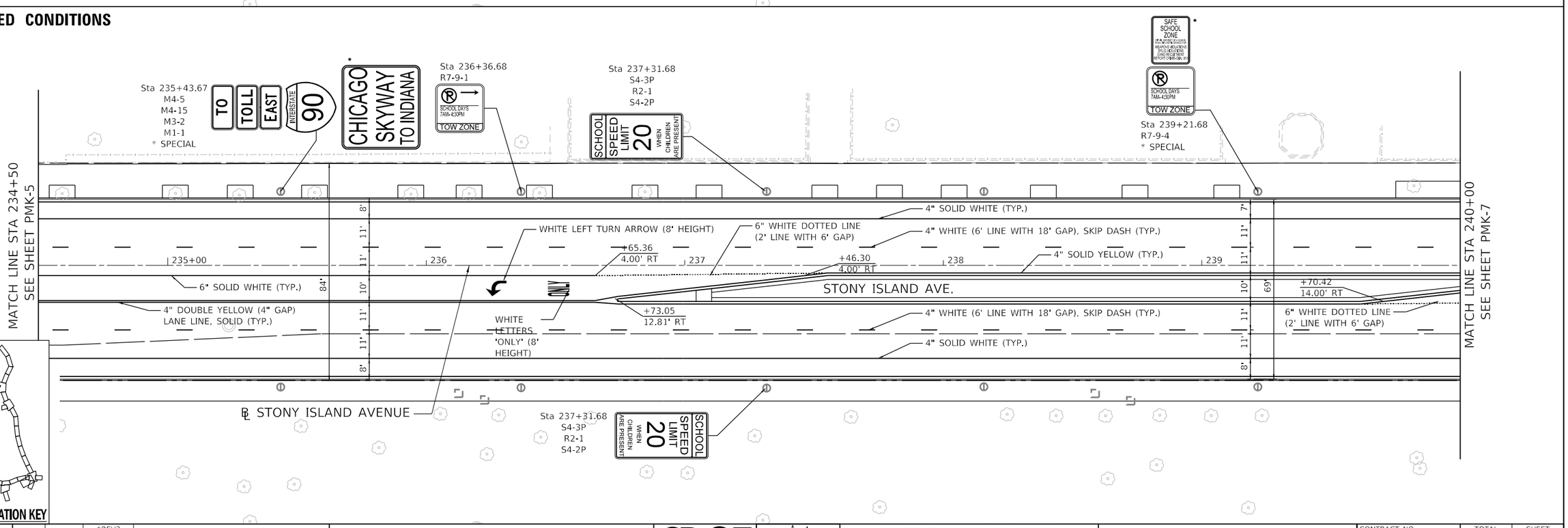


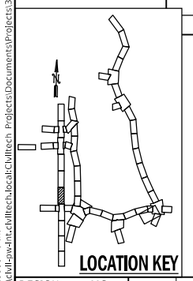


| | | | | | |
|---|---|---|---|---|---|
| DESIGN: MG | | | | $REV3 | |
| DRAWN: MG | | | | $REV2 | |
| CHECKED: DM | | | | $REV1 | |
| APPROVED: | NO. | BY | DATE | DESCRIPTION | |
| DATE: 01/22/2021 | REVISIONS | | | | |

CDOT CHICAGO DEPARTMENT OF TRANSPORTATION

C*NECT

**PAVEMENT MARKING AND SIGNING**
**EXISTING & PROPOSED CONDITIONS**
**S. STONY ISLAND AVE.**

**JACKSON PARK MOBILITY IMPROVEMENTS**

STA. 234+50 TO STA. 240+00

| | | | |
|---|---|---|---|
| CONTRACT NO. - | | TOTAL SHEETS 1434 | SHEET NO. 695 |
| PROJECT NO. B-7-203 | | DRAWING NO. PMK-6 | |
| SCALE: 1"=20' | | | |

PLOT DATE: 2/15/2021
PLOT SCALE: 40.0000 ' / in.
FILE NAME: pw:\\cdot-pw-int-civiltech.bcat\Civiltech Projects\Documents\Projects\3153\CAD\Sheets\PMK\cdt-pmk-s-i406.dgn

## EXISTING CONDITIONS

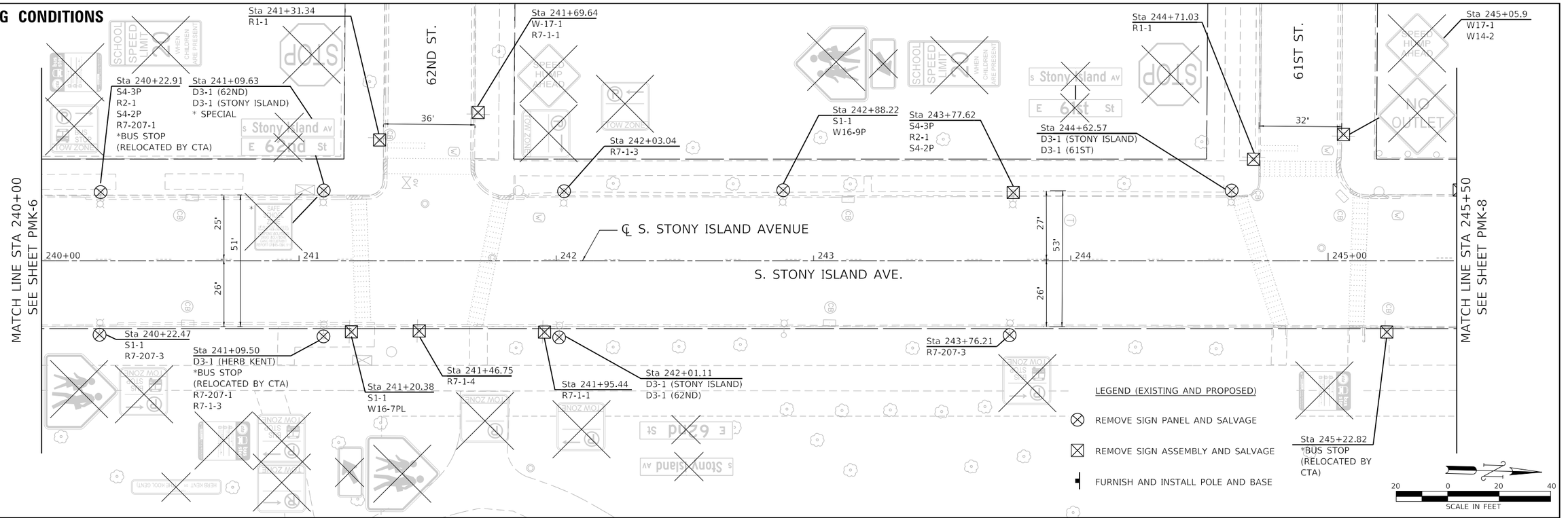


## PROPOSED CONDITIONS




| | | | | | |
|---|---|---|---|---|---|
| DESIGN: MG | | | | $REV3 | |
| DRAWN: MG | | | | $REV2 | |
| CHECKED: DM | | | | $REV1 | |
| APPROVED: | NO. | BY | DATE | DESCRIPTION | |
| DATE: 01/22/2021 | REVISIONS | | | | |

CHICAGO DEPARTMENT OF TRANSPORTATION

C*NECT

**PAVEMENT MARKING AND SIGNING**
**EXISTING & PROPOSED CONDITIONS**
**S. STONY ISLAND AVE.**

**JACKSON PARK MOBILITY IMPROVEMENTS**

STA. 240+00 TO STA. 245+50

| | |
|---|---|
| CONTRACT NO. | - |
| PROJECT NO. | B-7-203 |
| SCALE: | 1"=20' |

| TOTAL SHEETS | SHEET NO. |
|---|---|
| 1434 | 696 |

DRAWING NO. **PMK-7**

PLOT DATE: 2/15/2021
PLOT SCALE: 40.0000 ' / in.
FILE NAME: pw:\cdot-sw-int.dwltech.local:cdotltech_Projects\Documents\Projects\3153\CAD\Sheets\PMK\3H-comk-s-2007.dgn

## EXISTING CONDITIONS

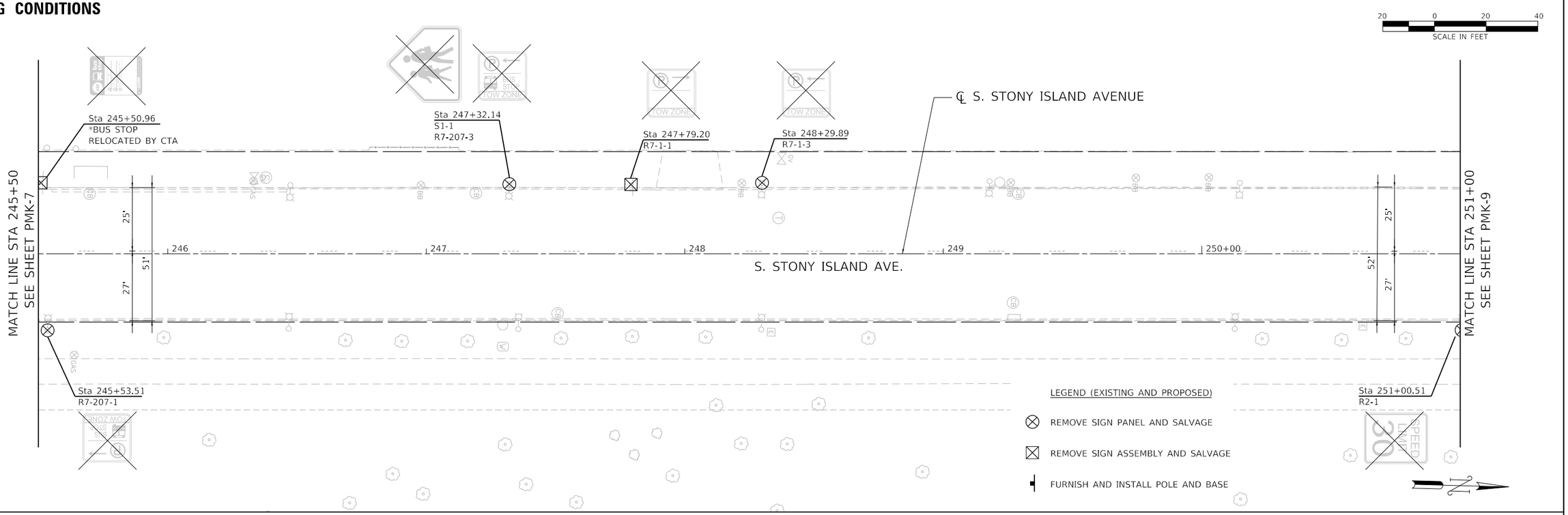


## PROPOSED CONDITIONS

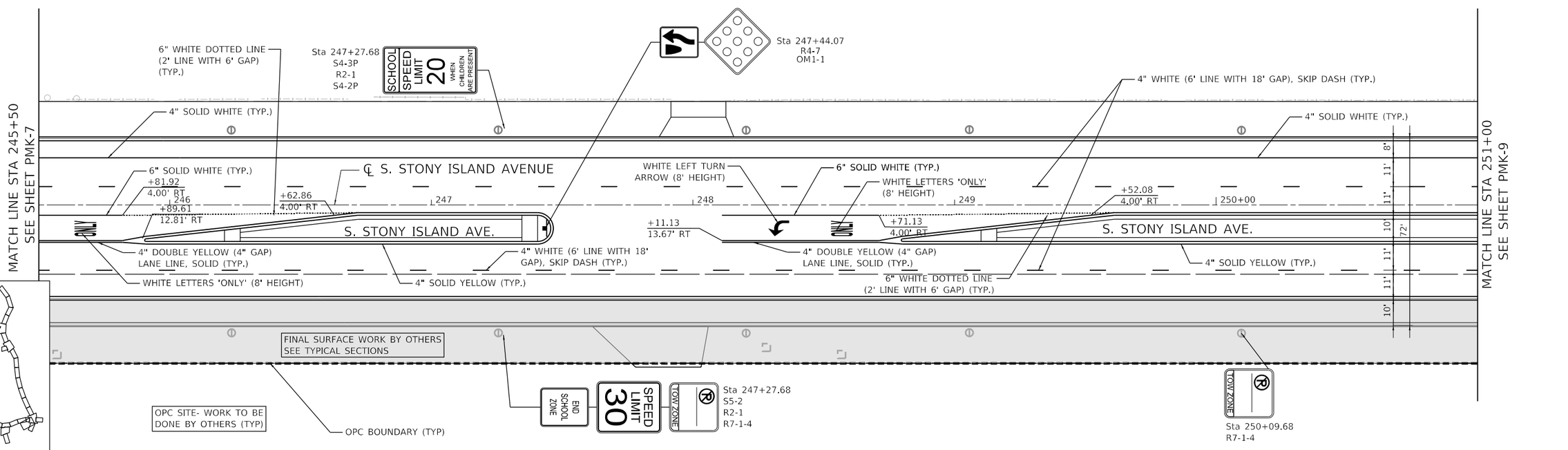


| | | | | | |
|---|---|---|---|---|---|
| DESIGN: | MG | | | SREV3 | |
| DRAWN: | MG | | | SREV2 | |
| CHECKED: | DM | | | SREV1 | |
| APPROVED: | | NO. | BY | DATE | DESCRIPTION |
| DATE: 01/22/2021 | | | | REVISIONS | |

CDOT CHICAGO DEPARTMENT OF TRANSPORTATION

C*NECT

PAVEMENT MARKING AND SIGNING
EXISTING & PROPOSED CONDITIONS
S. STONY ISLAND AVE.

JACKSON PARK MOBILITY IMPROVEMENTS

STA. 245+50 TO STA. 251+00

| | | | |
|---|---|---|---|
| CONTRACT NO. - | TOTAL SHEETS | SHEET NO. |
| PROJECT NO. B-7-203 | 1434 | 697 |
| SCALE: 1"=20' | DRAWING NO. PMK-8 | |

PLOT DATE: 2/15/2021
PLOT SCALE: 40.0000 ' / in.
FILE NAME: pw:\\civil-pw-int.civiltech.local:Civiltech Projects\Documents\Projects\3153\CAD\Sheets\PMK\sht-pmk-s-008.dgn

## EXISTING CONDITIONS

20 0 20 40
SCALE IN FEET

LEGEND (EXISTING AND PROPOSED)

- REMOVE SIGN PANEL AND SALVAGE
- REMOVE SIGN ASSEMBLY AND SALVAGE
- FURNISH AND INSTALL POLE AND BASE

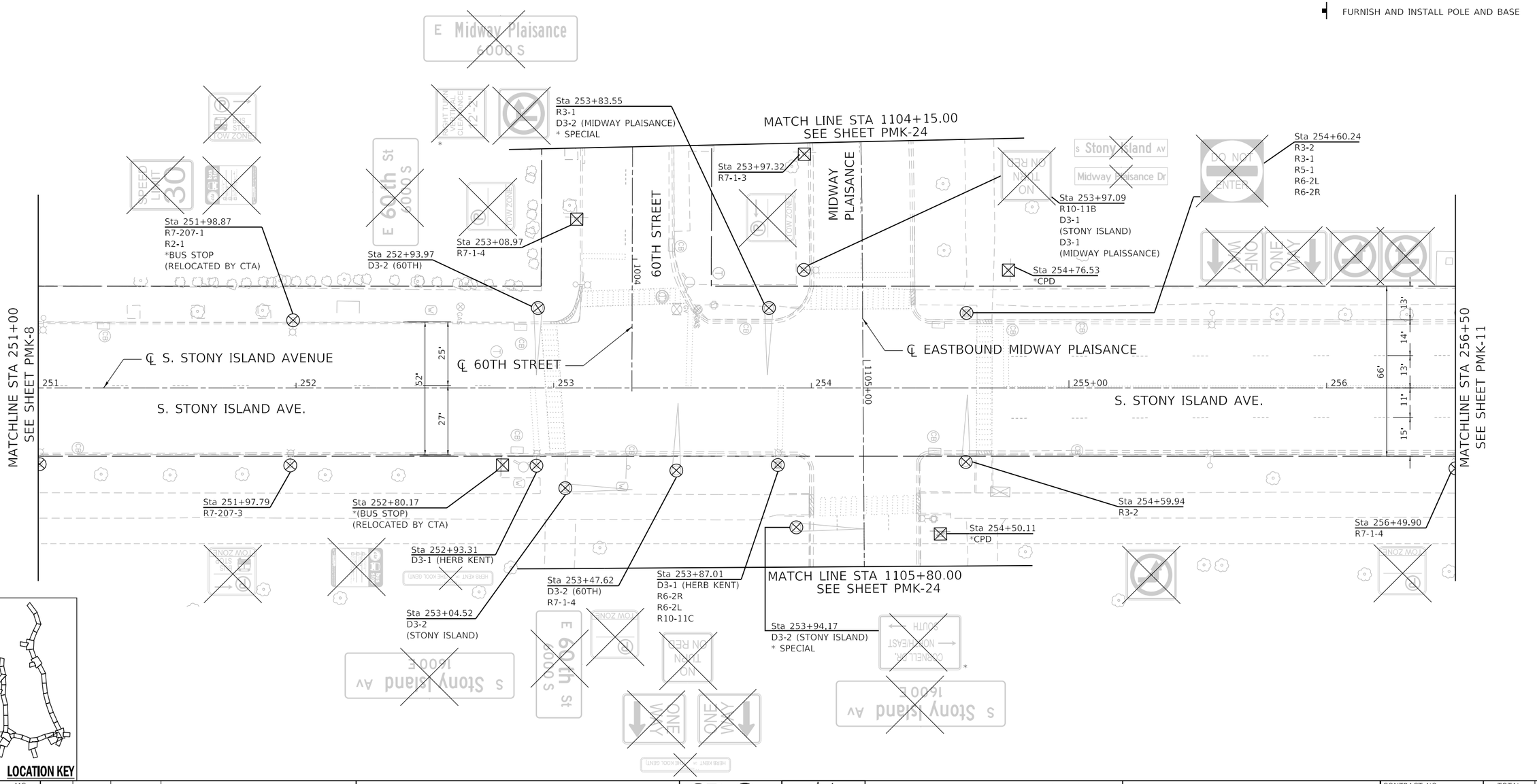


LOCATION KEY

| | | | | |
|---|---|---|---|---|
| DESIGN: MG | | | | |
| DRAWN: MG | | | | |
| CHECKED: DM | | | | |
| APPROVED: | NO. | BY | DATE | DESCRIPTION |
| DATE: 01/22/2021 | REVISIONS | | | |

CDOT CHICAGO DEPARTMENT OF TRANSPORTATION

C*NECT

**PAVEMENT MARKING AND SIGNING**
**EXISTING CONDITIONS**
**S. STONY ISLAND AVE.**

**JACKSON PARK MOBILITY IMPROVEMENTS**

STA. 251+00 TO STA. 256+50

| | |
|---|---|
| CONTRACT NO. | - |
| PROJECT NO. | B-7-203 |
| SCALE: | 1"=20' |

| TOTAL SHEETS | SHEET NO. |
|---|---|
| 1434 | 698 |

DRAWING NO. **PMK-9**

PLOT DATE: 2/15/2021
PLOT SCALE: 40.0000 ' / in.
FILE NAME: pw:\\cdot-ownint.ckvltech.local:CkvltechProjects\Documents\Projects\3133\CAD\Sheets\PMK\sht-pmk-s-009.dgn

## PROPOSED CONDITIONS

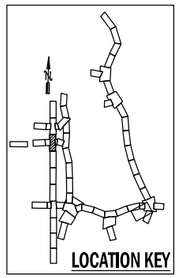


LEGEND (EXISTING AND PROPOSED)

- REMOVE SIGN PANEL AND SALVAGE
- REMOVE SIGN ASSEMBLY AND SALVAGE
- FURNISH AND INSTALL POLE AND BASE

20 0 20 40
SCALE IN FEET

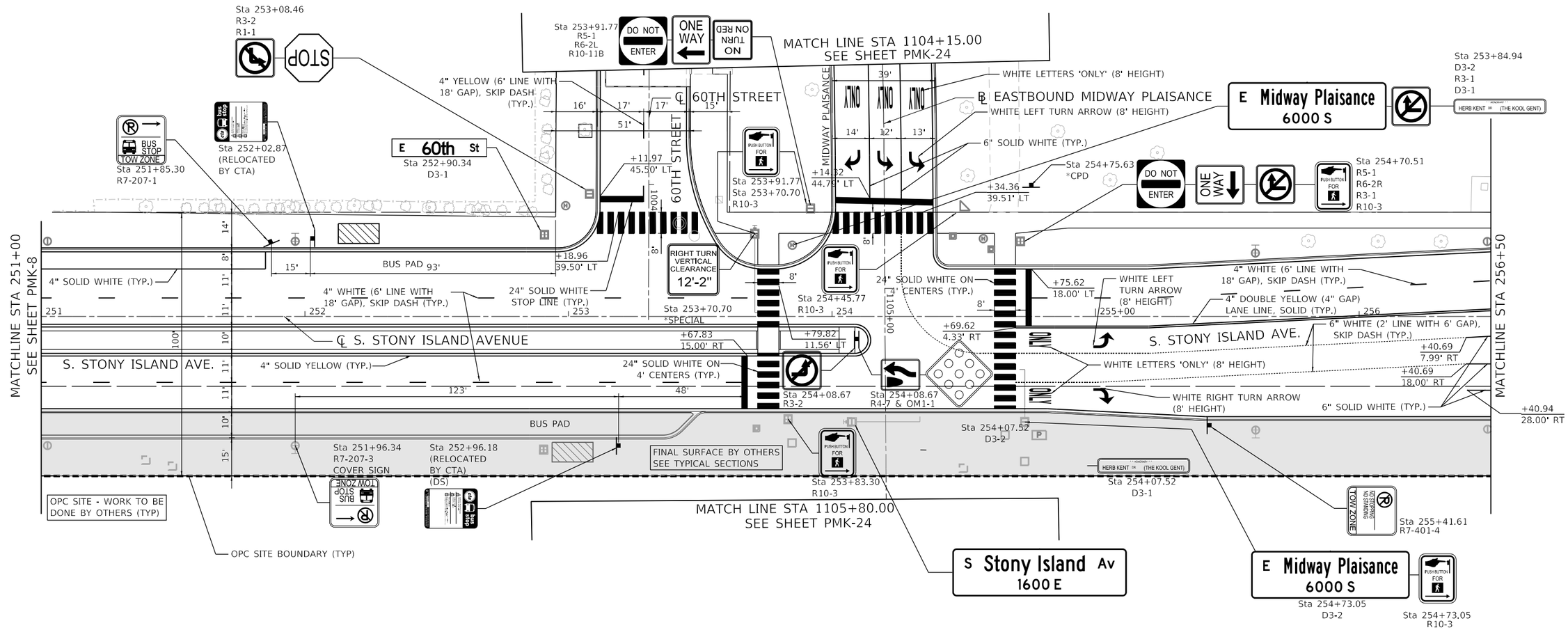


| | | | | |
|---|---|---|---|---|
| DESIGN: MG | | | | |
| DRAWN: MG | | | | |
| CHECKED: DM | | | | |
| APPROVED: | NO. | BY | DATE | DESCRIPTION |
| DATE: 01/22/2021 | REVISIONS | | | |

CDOT CHICAGO DEPARTMENT OF TRANSPORTATION

C*NECT

PAVEMENT MARKING AND SIGNING
PROPOSED CONDITIONS
S. STONY ISLAND AVE.

JACKSON PARK MOBILITY IMPROVEMENTS

STA. 251+00 TO STA. 256+50

| | | |
|---|---|---|
| CONTRACT NO. - | TOTAL SHEETS 1434 | SHEET NO. 699 |
| PROJECT NO. B-7-203 | DRAWING NO. PMK-10 | |
| SCALE: 1"=20' | | |

PLOT DATE: 2/15/2021
PLOT SCALE: 40.0000 ' / in.
FILE NAME: pw:\\civil-pw-int.civiltech.local:Civiltech Projects\Documents\Projects\3153\CAD\Sheets\PMK\sht-pmk-s-010.dgn

## EXISTING CONDITIONS

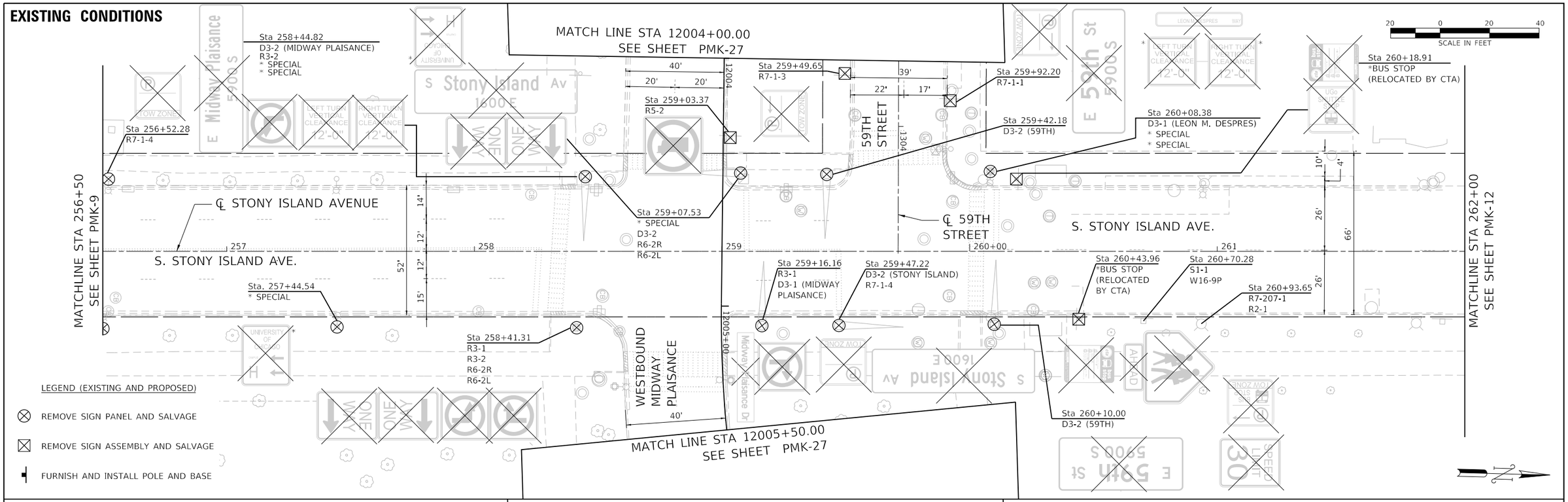


## PROPOSED CONDITIONS

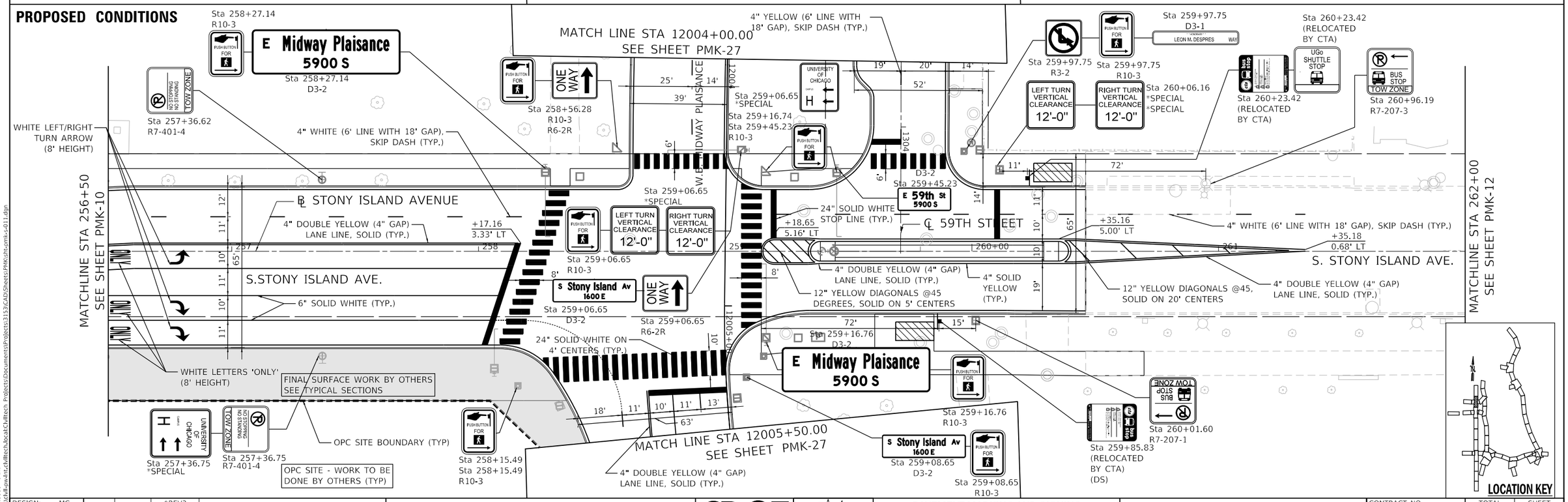


| | | | | | |
|---|---|---|---|---|---|
| DESIGN: MG | | | $REV3 | | |
| DRAWN: MG | | | $REV2 | | |
| CHECKED: DM | | | $REV1 | | |
| APPROVED: | NO. | BY | DATE | DESCRIPTION | |
| DATE: 01/22/2021 | REVISIONS | | | | |

CDOT CHICAGO DEPARTMENT OF TRANSPORTATION

C²NECT

**PAVEMENT MARKING AND SIGNING**
**EXISTING & PROPOSED CONDITIONS**
**S. STONY ISLAND AVE.**

**JACKSON PARK MOBILITY IMPROVEMENTS**

STA. 256+50 TO STA. 262+00

| | |
|---|---|
| CONTRACT NO. | - |
| PROJECT NO. | B-7-203 |
| SCALE: | 1"=20' |

| TOTAL SHEETS | SHEET NO. |
|---|---|
| 1434 | 700 |

DRAWING NO. **PMK-11**

PLOT DATE: 2/15/2021
PLOT SCALE: 40.0000 ' / in.
FILE NAME: pw:\cdot-pw-int.ctwltech.local:Cultech Projects:Documents:Projects:3153\CAD\Sheets:PMK\cdt-pmk-s011.dgn

## EXISTING CONDITIONS

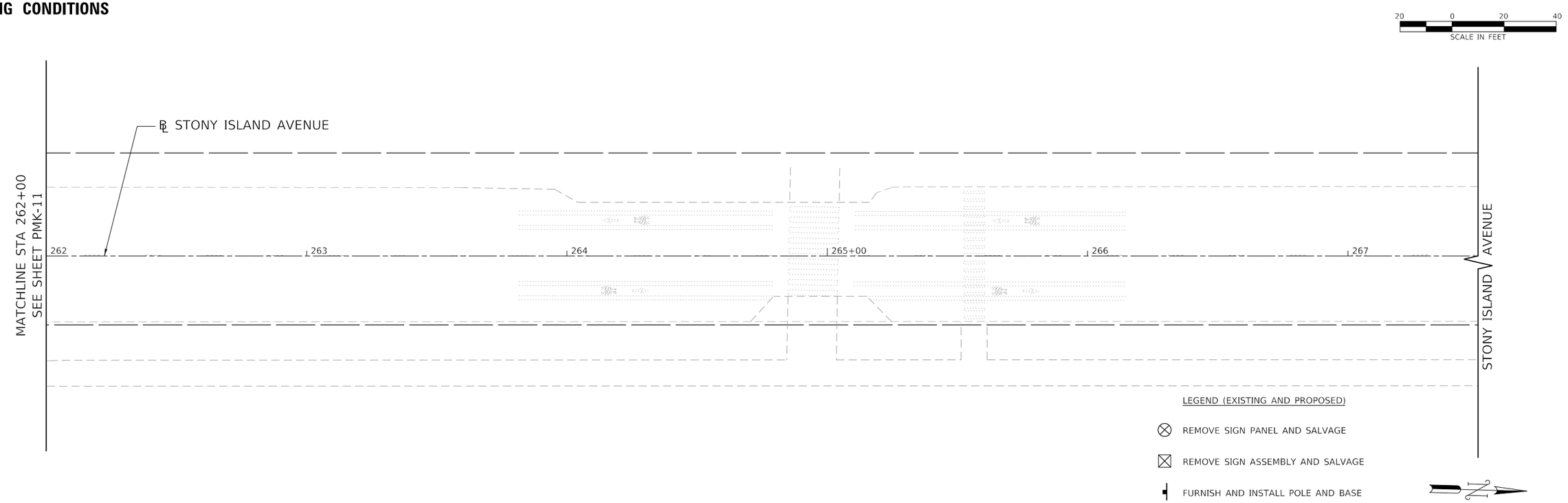


## PROPOSED CONDITIONS

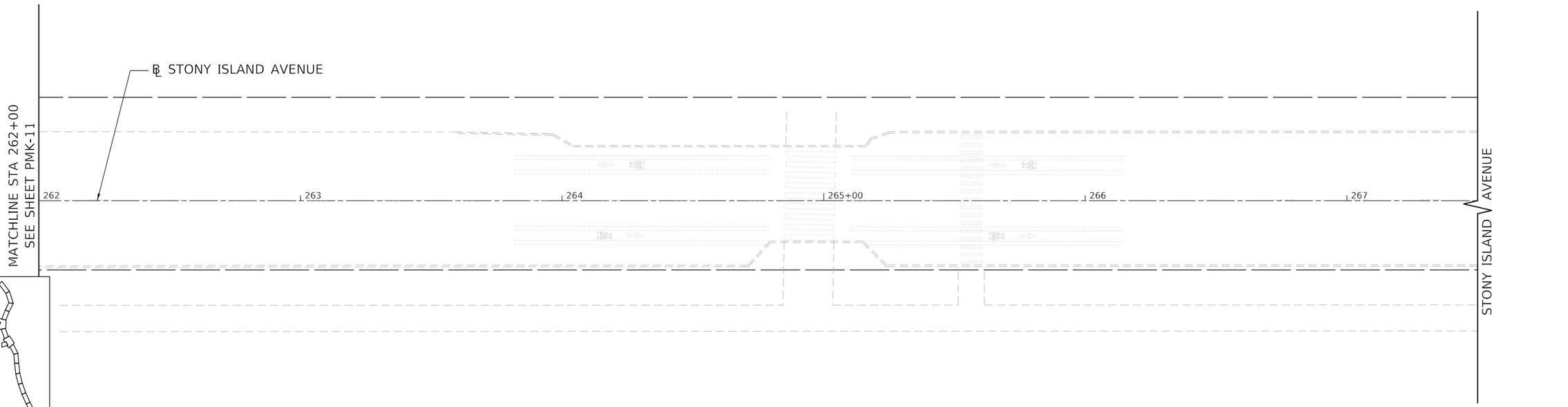


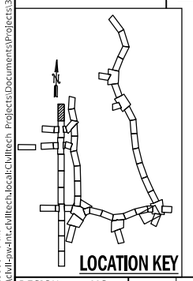


| | | | | | |
|---|---|---|---|---|---|
| DESIGN: MG | | | | $REV3 | |
| DRAWN: MG | | | | $REV2 | |
| CHECKED: DM | | | | $REV1 | |
| APPROVED: | NO. | BY | DATE | DESCRIPTION | |
| DATE: 01/22/2021 | REVISIONS | | | | |

CDOT CHICAGO DEPARTMENT OF TRANSPORTATION

C*NECT

PAVEMENT MARKING AND SIGNING
EXISTING & PROPOSED CONDITIONS
S. STONY ISLAND AVE.

JACKSON PARK MOBILITY IMPROVEMENTS

STA. 262+00 TO STA. 267+50

| | | | |
|---|---|---|---|
| CONTRACT NO. | - | TOTAL SHEETS | SHEET NO. |
| PROJECT NO. | B-7-203 | 1434 | 701 |
| SCALE: 1"=20' | | DRAWING NO. | PMK-12 |

PLOT DATE: 2/15/2021
PLOT SCALE: 40.0000 ' / in.
FILE NAME: pw:\\cdot-pw-int-civiltech.bcat:CivilTech Projects\Documents\Projects\3153\CAD\Sheets\PMK\cdt-pmk-c-012.dgn

## EXISTING CONDITIONS

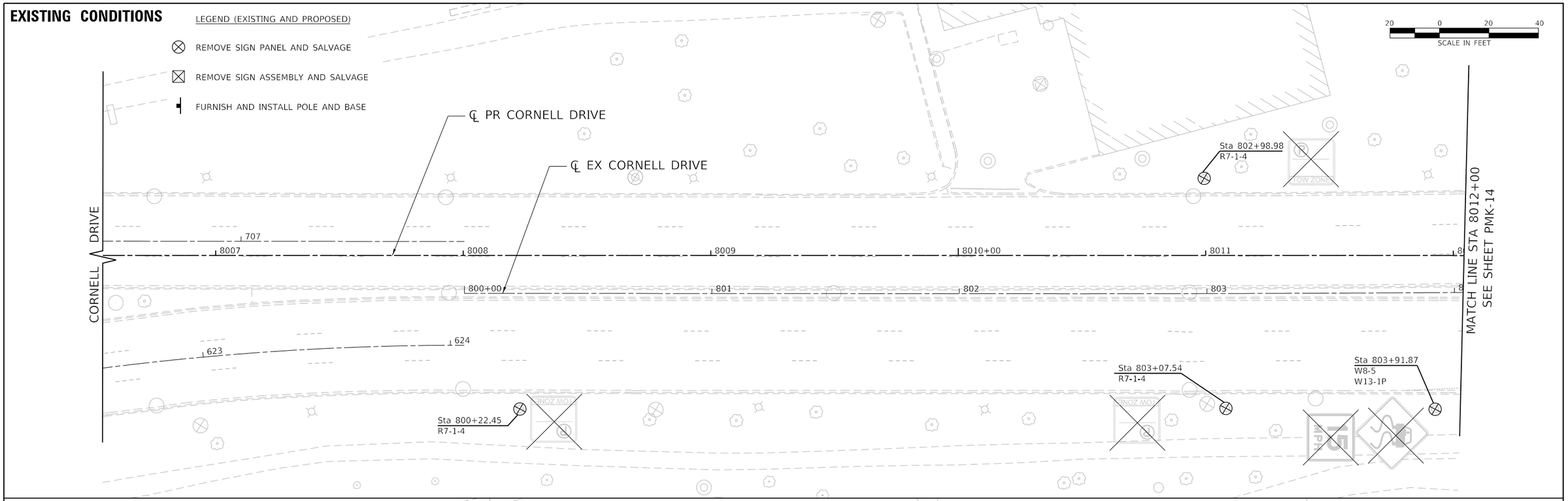


## PROPOSED CONDITIONS

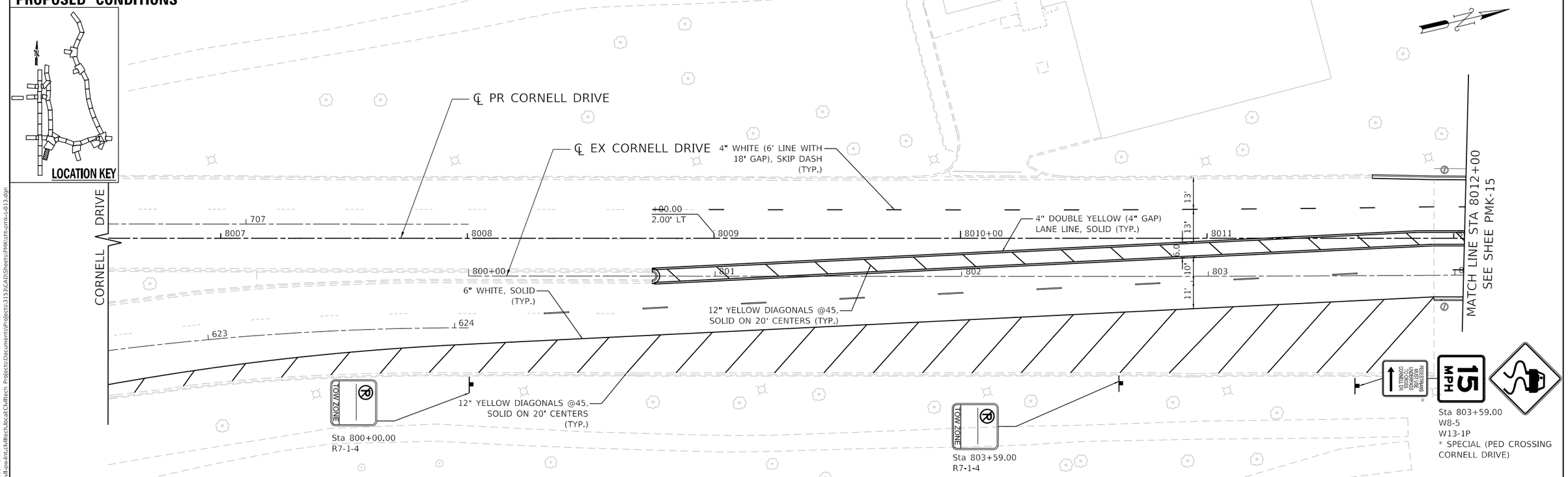


PLOT DATE: 2/15/2021
PLOT SCALE: 40.0000 ' / in.
FILE NAME: pw:\cdot-pw-int-civiltech.bcad:CivilTech Projects\Documents\Projects\3153\CAD\Sheets\PMK\cdt-pmk-s013.dgn

| | | | | | |
|---|---|---|---|---|---|
| DESIGN: | MG | | | $REV3 | |
| DRAWN: | MG | | | $REV2 | |
| CHECKED: | DM | | | $REV1 | |
| APPROVED: | | NO. | BY | DATE | DESCRIPTION |
| DATE: 01/22/2021 | | REVISIONS | | | |

CDOT CHICAGO DEPARTMENT OF TRANSPORTATION

C*NECT

**PAVEMENT MARKING AND SIGNING**
**EXISTING & PROPOSED CONDITIONS**
**S. CORNELL DR.**

**JACKSON PARK MOBILITY IMPROVEMENTS**

STA. 8006+50 TO STA. 8012+00

| | |
|---|---|
| CONTRACT NO. | - |
| PROJECT NO. | B-7-203 |
| SCALE: | 1"=20' |

| TOTAL SHEETS | SHEET NO. |
|---|---|
| 1434 | 702 |
| DRAWING NO. | PMK-13 |

## EXISTING CONDITIONS

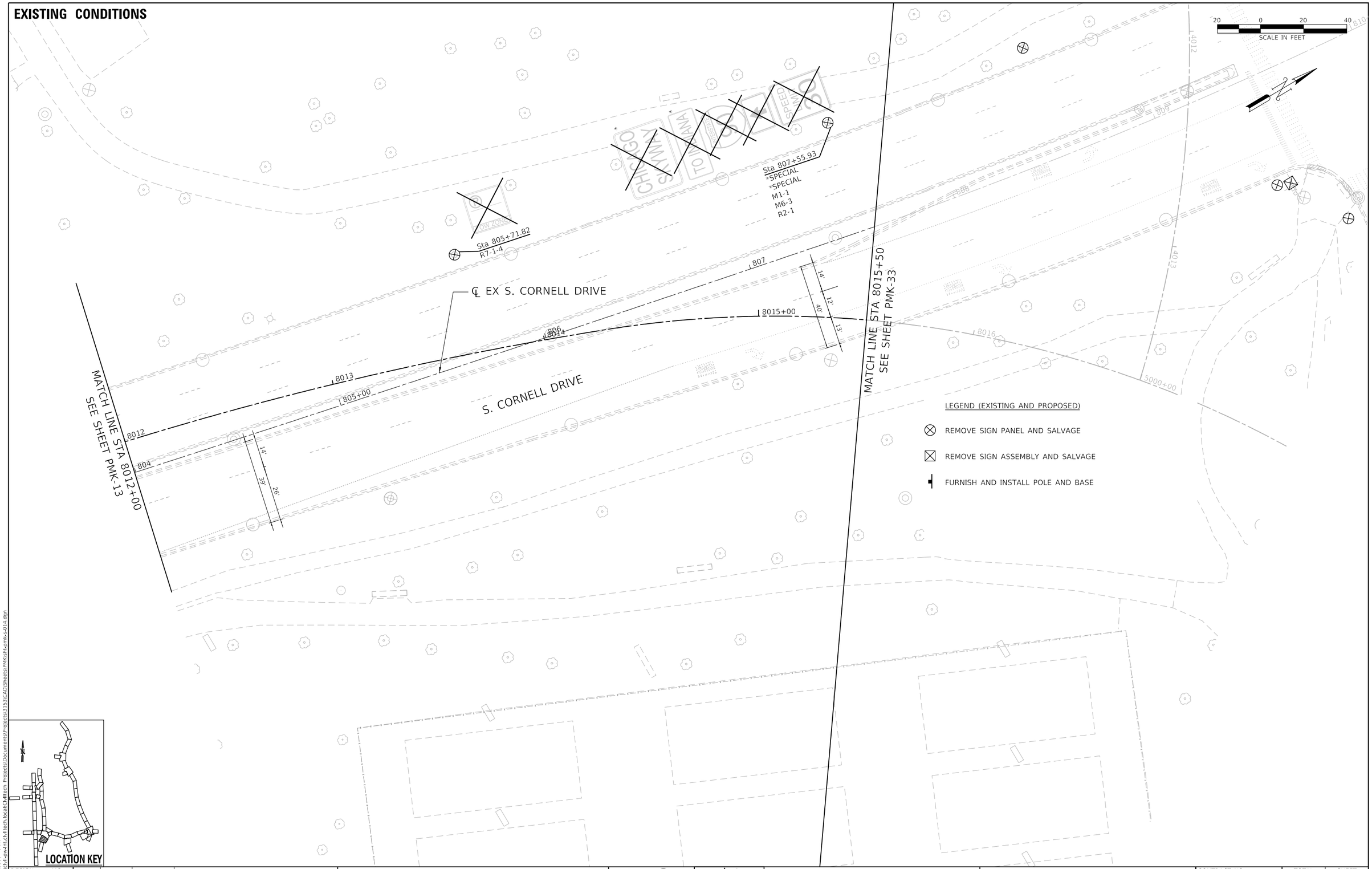





| | | | | | |
|---|---|---|---|---|---|
| DESIGN: MG | | | | | |
| DRAWN: MG | | | | | |
| CHECKED: DM | | | | | |
| APPROVED: | NO. | BY | DATE | DESCRIPTION | |
| DATE: 01/22/2021 | REVISIONS | | | | |

CDOT CHICAGO DEPARTMENT OF TRANSPORTATION

C*NECT

PAVEMENT MARKING AND SIGNING
EXISTING CONDITIONS
S. CORNELL DR.

JACKSON PARK MOBILITY IMPROVEMENTS

STA. 8012+00 TO STA. 8015+00

| | |
|---|---|
| CONTRACT NO. - | TOTAL SHEETS 1434 / SHEET NO. 703 |
| PROJECT NO. B-7-203 | DRAWING NO. PMK-14 |
| SCALE: 1"=20' | |

PLOT DATE: 2/15/2021
PLOT SCALE: 40.0000 ' / in.
FILE NAME: pw:\\cdot-pw-int.civiltech.local\Civiltech Projects\Documents\Projects\3153\CADD\Sheets\PMK\cht-pmk-s-014.dgn

**PROPOSED CONDITIONS**

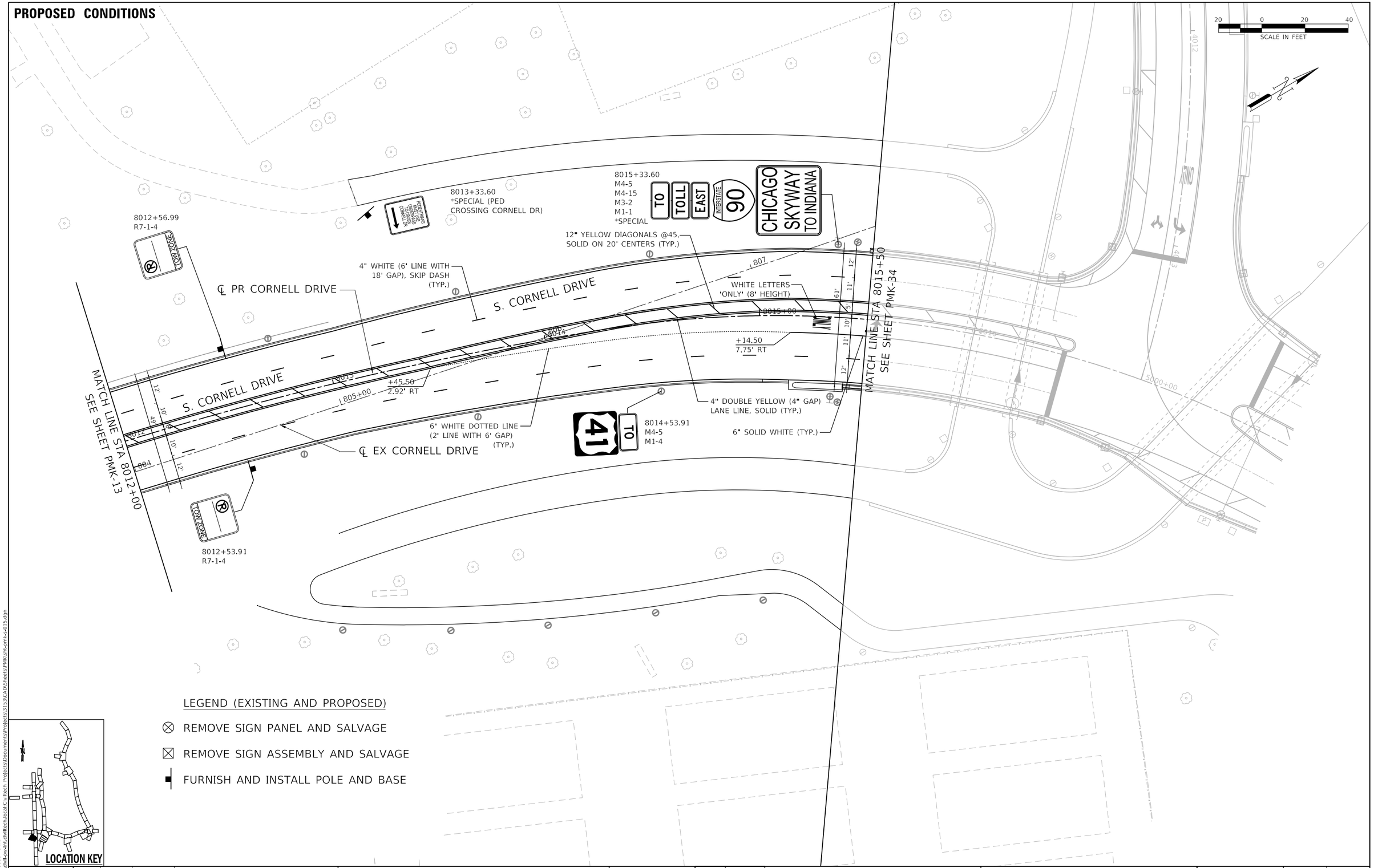


LEGEND (EXISTING AND PROPOSED)

- ⊗ REMOVE SIGN PANEL AND SALVAGE
- ⊠ REMOVE SIGN ASSEMBLY AND SALVAGE
- ▪ FURNISH AND INSTALL POLE AND BASE




| | | | | |
|---|---|---|---|---|
| DESIGN: MG | | | | |
| DRAWN: MG | | | | |
| CHECKED: DM | | | | |
| APPROVED: | NO. | BY | DATE | DESCRIPTION |
| DATE: 01/22/2021 | REVISIONS | | | |

CDOT CHICAGO DEPARTMENT OF TRANSPORTATION

C*NECT

**PAVEMENT MARKING AND SIGNING**
**PROPOSED CONDITIONS**
**S. CORNELL DR.**

**JACKSON PARK MOBILITY IMPROVEMENTS**

STA. 8012+00 TO STA. 8015+00

| | |
|---|---|
| CONTRACT NO. | - |
| PROJECT NO. | B-7-203 |
| SCALE: | 1"=20' |

| TOTAL SHEETS | SHEET NO. |
|---|---|
| 1434 | 704 |

DRAWING NO. **PMK-15**

PLOT DATE: 2/15/2021
PLOT SCALE: 40.0000 ' / in.
FILE NAME: pw:\cdot-pw-int.chiltech.local:\chiltech_Projects\Documents\Projects\3153\CAD\Sheets\PMK\cht-pmk-s-015.dgn

## EXISTING CONDITIONS

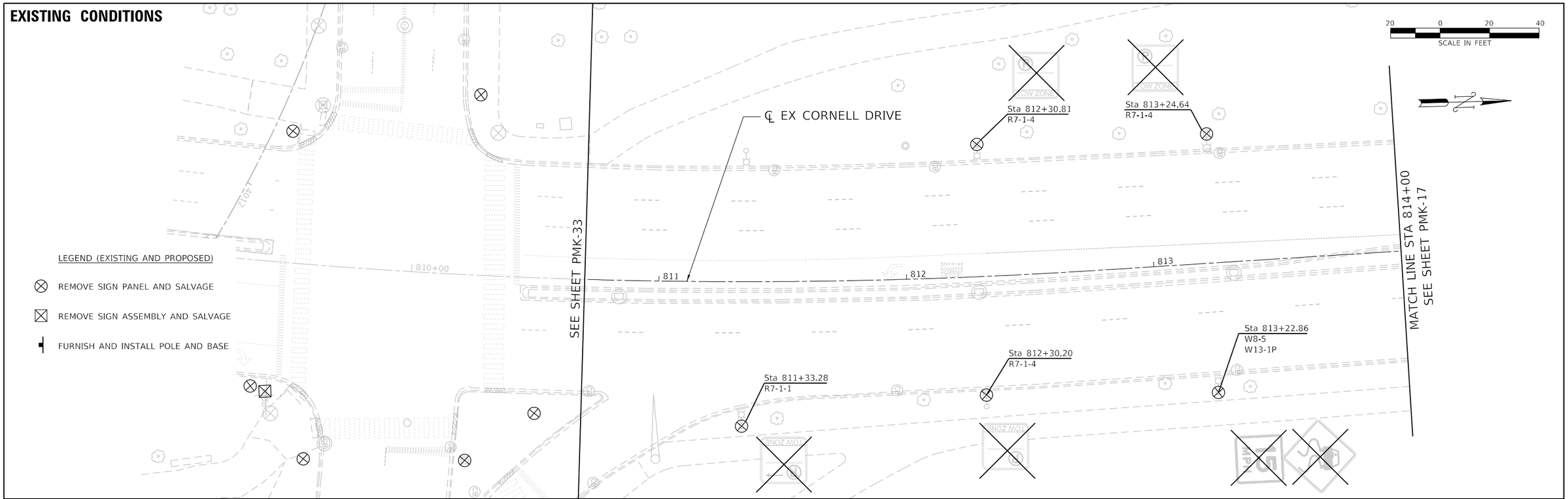


## PROPOSED CONDITIONS

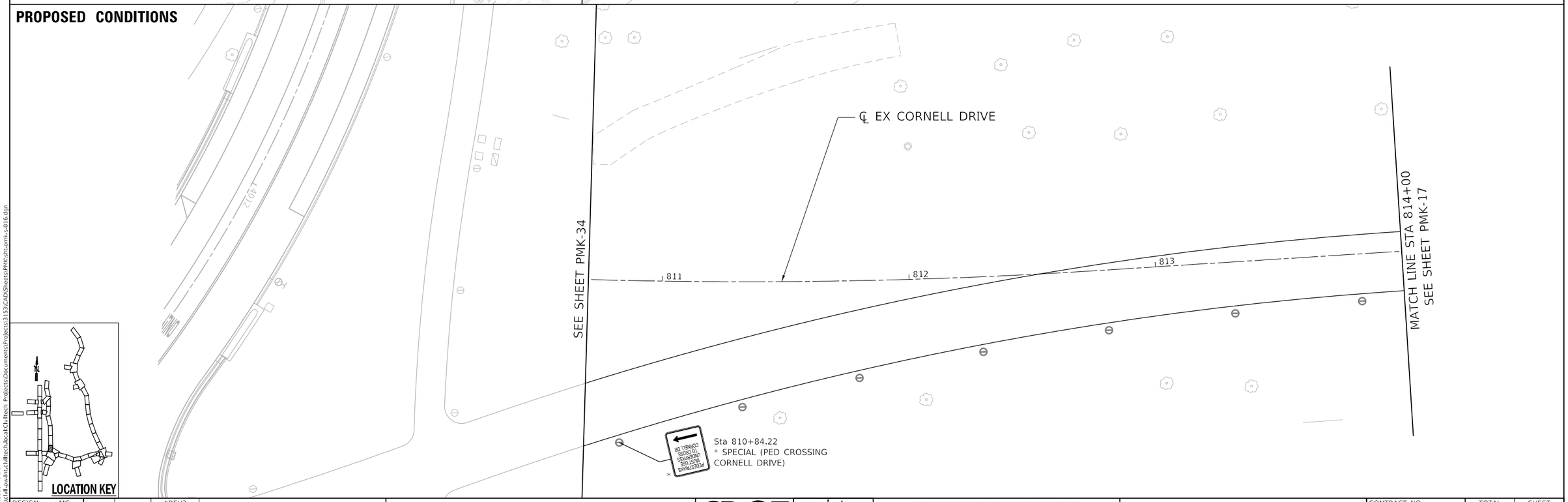


| | | | | | |
|---|---|---|---|---|---|
| DESIGN: MG | | | $REV3 | | |
| DRAWN: MG | | | $REV2 | | |
| CHECKED: DM | | | $REV1 | | |
| APPROVED: | NO. | BY | DATE | DESCRIPTION | |
| DATE: 01/22/2021 | REVISIONS | | | | |

CDOT CHICAGO DEPARTMENT OF TRANSPORTATION

C*NECT

**PAVEMENT MARKING AND SIGNING**
**EXISTING & PROPOSED CONDITIONS**
**S. CORNELL DR.**

**JACKSON PARK MOBILITY IMPROVEMENTS**

STA. 810+70 TO STA. 814+00

| | |
|---|---|
| CONTRACT NO. | - |
| PROJECT NO. | B-7-203 |
| SCALE: 1"=20' | |

| TOTAL SHEETS | SHEET NO. |
|---|---|
| 1434 | 705 |

DRAWING NO. **PMK-16**

PLOT DATE: 2/15/2021
PLOT SCALE: 40.0000 ' / in.
FILE NAME: pw:\cdot-pw-int.cdwltech.local:cdwltech Projects\Documents\Projects\3153\CAD\Sheets\PMK\cht-conk-s-016.dgn

## EXISTING CONDITIONS

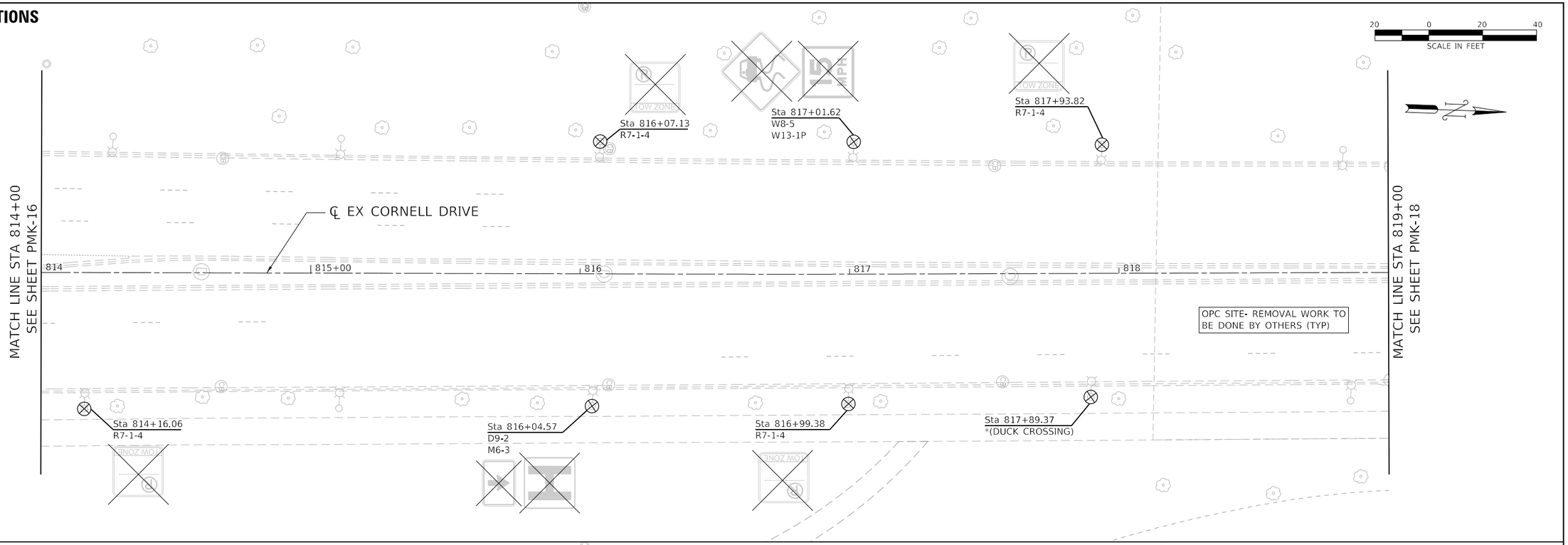


## PROPOSED CONDITIONS

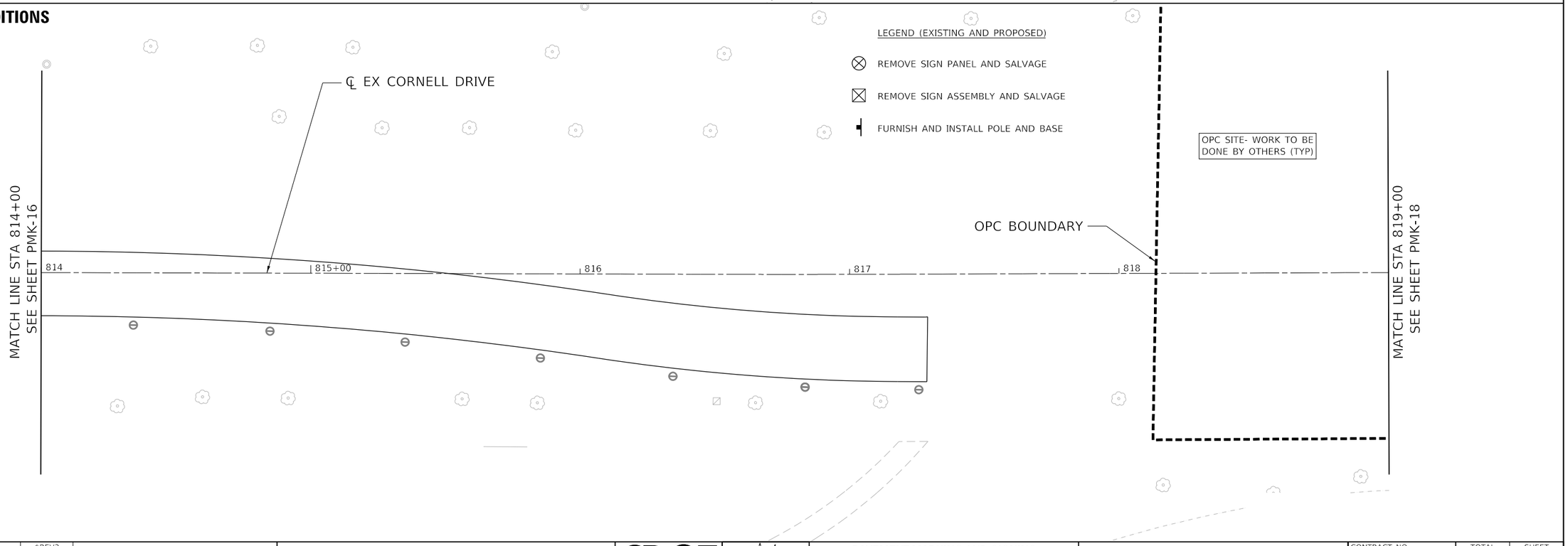


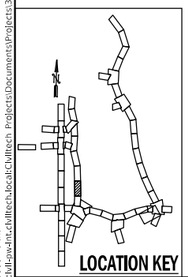


LOCATION KEY

| | | | | | |
|---|---|---|---|---|---|
| DESIGN: MG | | | | ŚREV3 | |
| DRAWN: MG | | | | ŚREV2 | |
| CHECKED: DM | | | | ŚREV1 | |
| APPROVED: | NO. | BY | DATE | DESCRIPTION | |
| DATE: 01/22/2021 | REVISIONS | | | | |

CDOT CHICAGO DEPARTMENT OF TRANSPORTATION

C*NECT

**PAVEMENT MARKING AND SIGNING**
**EXISTING & PROPOSED CONDITIONS**
**S. CORNELL DR.**

**JACKSON PARK MOBILITY IMPROVEMENTS**

STA. 814+00 TO STA. 819+00

| | |
|---|---|
| CONTRACT NO. - | TOTAL SHEETS 1434 |
| PROJECT NO. B-7-203 | SHEET NO. 706 |
| SCALE: 1"=20' | DRAWING NO. PMK-17 |

PLOT DATE: 2/15/2021
PLOT SCALE: 40.0000 ' / in.
FILE NAME: pw:\\cdot-pw-int-civiltech.bcad\Civiltech Projects\Documents\Projects\3153\CAD\Sheets\PMK\sht-pmk-c-017.dgn

## EXISTING CONDITIONS

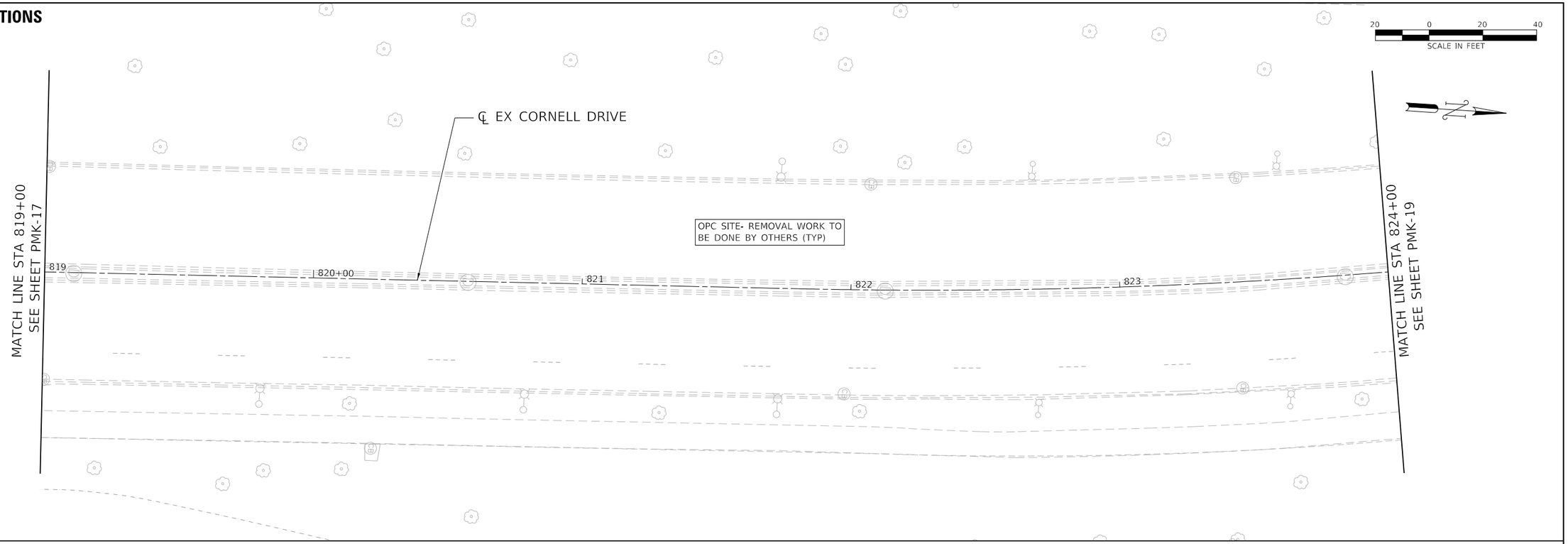


## PROPOSED CONDITIONS

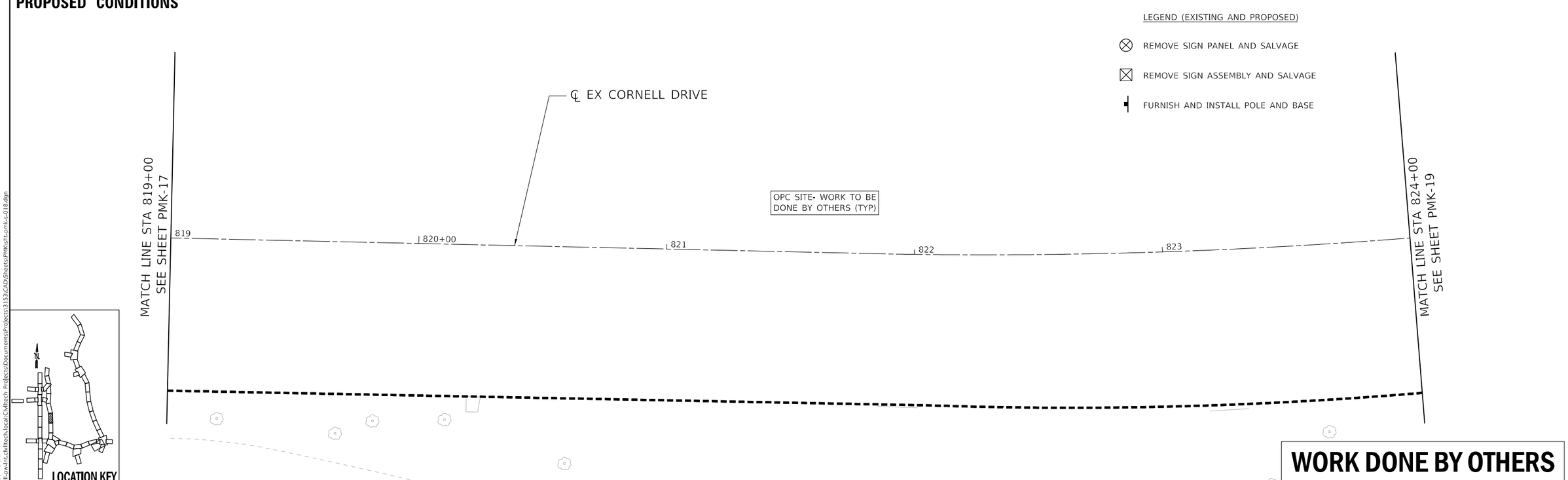





LOCATION KEY

**WORK DONE BY OTHERS**

| | | | | | |
|---|---|---|---|---|---|
| DESIGN: | MG | | | SREV3 | |
| DRAWN: | MG | | | SREV2 | |
| CHECKED: | DM | | | SREV1 | |
| APPROVED: | | NO. | BY | DATE | DESCRIPTION |
| DATE: 01/22/2021 | | REVISIONS | | | |

CDOT CHICAGO DEPARTMENT OF TRANSPORTATION

C*NECT

PAVEMENT MARKING AND SIGNING
EXISTING & PROPOSED CONDITIONS
S. CORNELL DR.

JACKSON PARK MOBILITY IMPROVEMENTS

STA. 819+00 TO STA. 824+00

| | | |
|---|---|---|
| CONTRACT NO. - | TOTAL SHEETS 1434 | SHEET NO. 707 |
| PROJECT NO. B-7-203 | DRAWING NO. PMK-18 | |
| SCALE: 1"=20' | | |

PLOT DATE: 2/15/2021
PLOT SCALE: 40.0000 ' / in.
FILE NAME: pw:\\civil-pw-int.civiltech.local:Civiltech Projects\Documents\Projects\3153\CAD\Sheets\PMK\sht-pmk-s-018.dgn

## EXISTING CONDITIONS

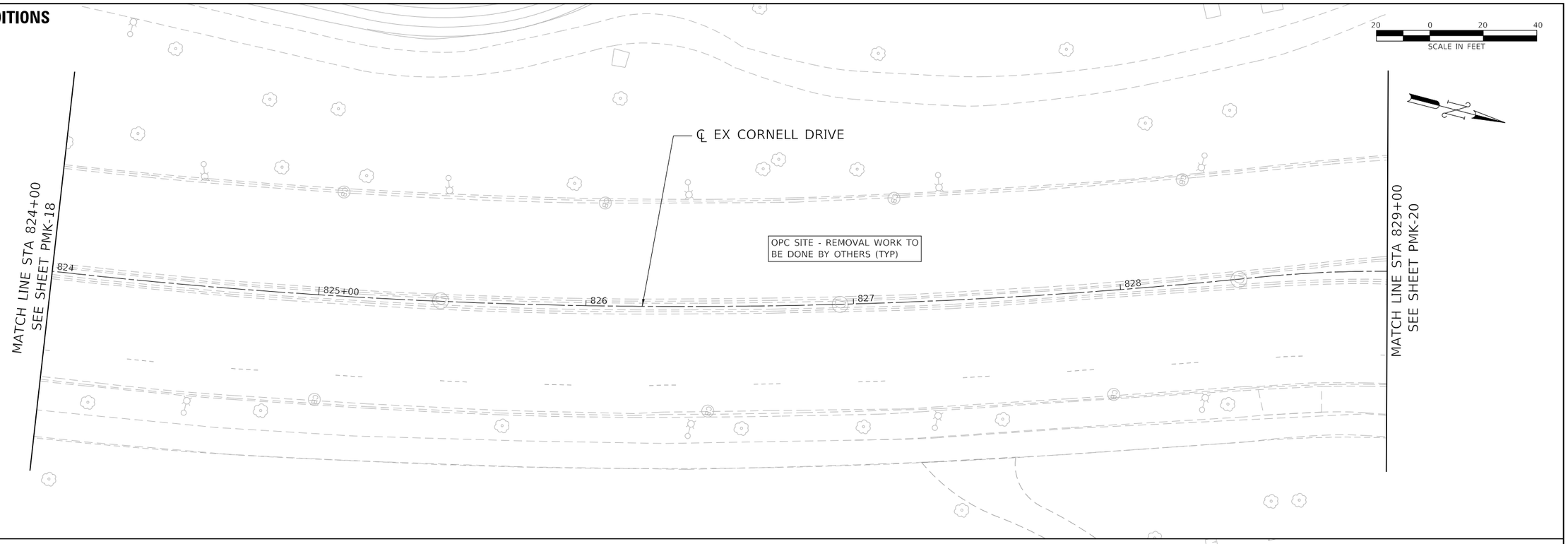


## PROPOSED CONDITIONS

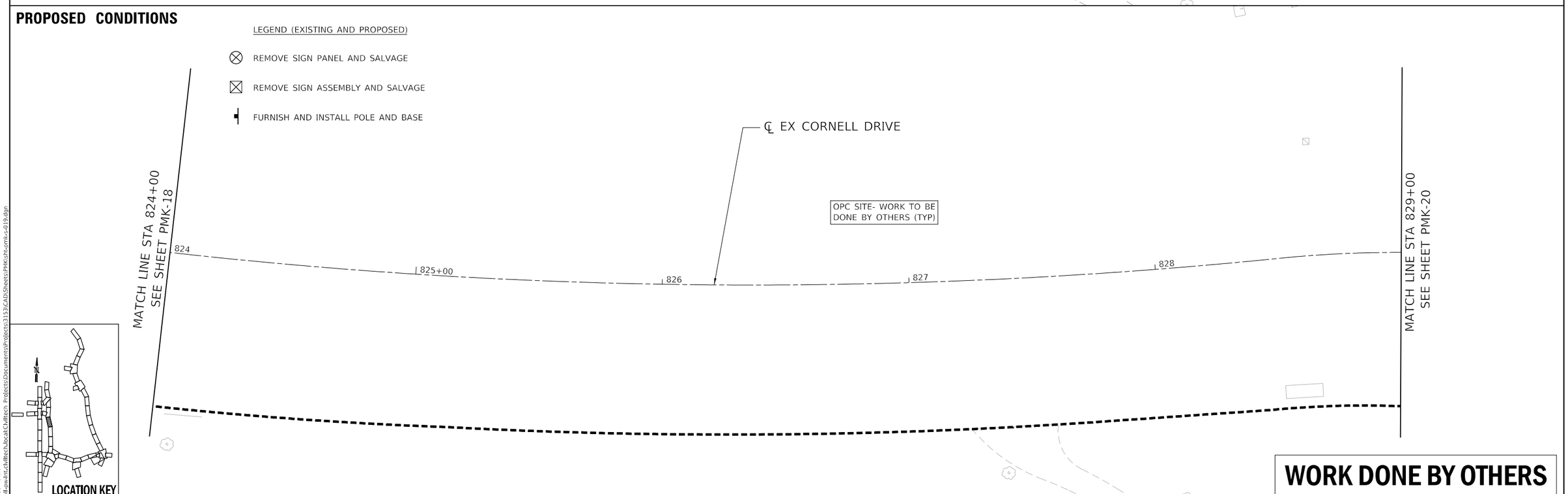


**WORK DONE BY OTHERS**

| | | | | |
|---|---|---|---|---|
| DESIGN: MG | | | SREV3 | |
| DRAWN: MG | | | SREV2 | |
| CHECKED: DM | | | SREV1 | |
| APPROVED: | NO. | BY | DATE | DESCRIPTION |
| DATE: 01/22/2021 | REVISIONS | | | |

CDOT CHICAGO DEPARTMENT OF TRANSPORTATION

C*NECT

PAVEMENT MARKING AND SIGNING
EXISTING & PROPOSED CONDITIONS
S. CORNELL DR.

JACKSON PARK MOBILITY IMPROVEMENTS

STA. 824+00 TO STA. 829+00

| | | |
|---|---|---|
| CONTRACT NO. - | TOTAL SHEETS 1434 | SHEET NO. 708 |
| PROJECT NO. B-7-203 | DRAWING NO. PMK-19 | |
| SCALE: 1"=20' | | |

PLOT DATE: 2/15/2021
PLOT SCALE: 40.0000 ' / in.
FILE NAME: pw:\\civil-pw-int.civiltech.local:Civiltech Projects\Documents\Projects\3153\CAD\Sheets\PMK\sht-pmk-s-019.dgn

## EXISTING CONDITIONS

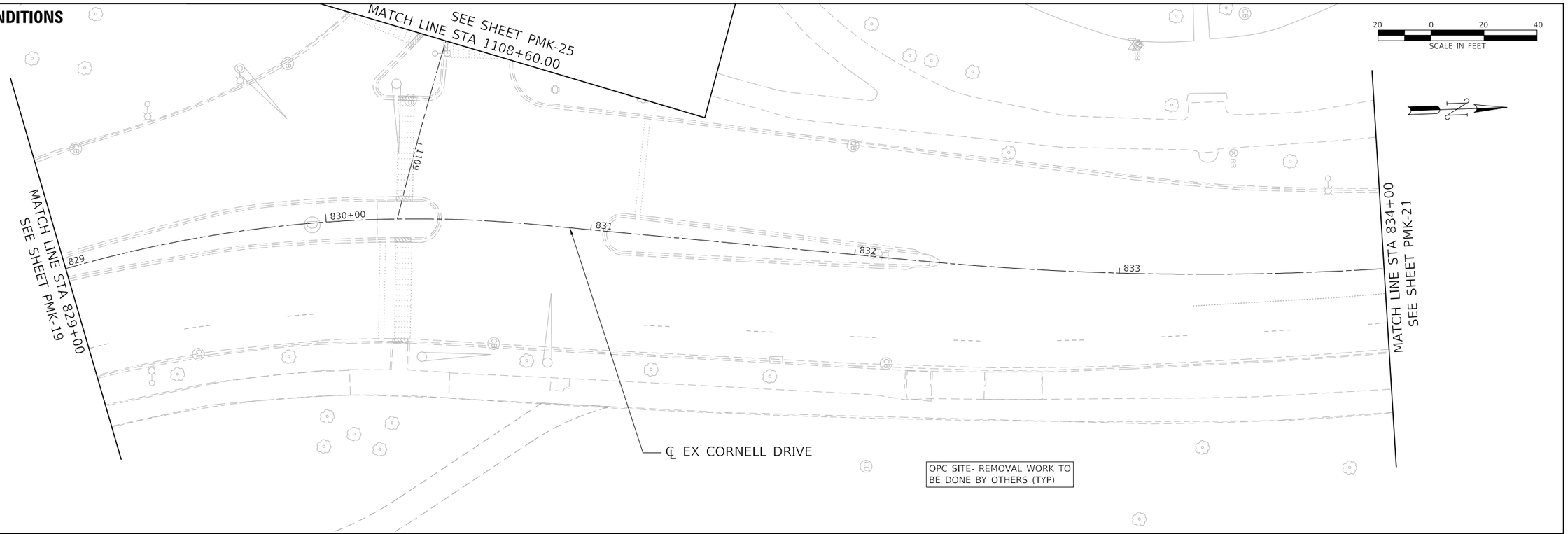


## PROPOSED CONDITIONS




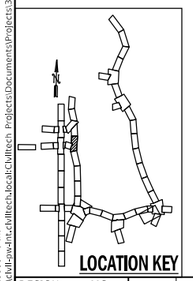


**WORK DONE BY OTHERS**

| | | | | | |
|---|---|---|---|---|---|
| DESIGN: MG | | | SREV3 | | |
| DRAWN: MG | | | SREV2 | | |
| CHECKED: DM | | | SREV1 | | |
| APPROVED: | NO. | BY | DATE | DESCRIPTION | |
| DATE: 01/22/2021 | REVISIONS | | | | |

CDOT CHICAGO DEPARTMENT OF TRANSPORTATION

C*NECT

PAVEMENT MARKING AND SIGNING
EXISTING & PROPOSED CONDITIONS
S. CORNELL DR.

JACKSON PARK MOBILITY IMPROVEMENTS

STA. 829+00 TO STA. 834+00

| | |
|---|---|
| CONTRACT NO. | - |
| PROJECT NO. | B-7-203 |
| SCALE: | 1"=20' |

| | |
|---|---|
| TOTAL SHEETS | 1434 |
| SHEET NO. | 709 |
| DRAWING NO. | PMK-20 |

PLOT DATE: 2/15/2021
PLOT SCALE: 40.0000 ' / in.
FILE NAME: pw:\cdot-sw-int.civiltech.local:CivilTech Projects\Documents\Projects\3153\CAD\Sheets\PMK\cht-conk-s-020.dgn

## EXISTING CONDITIONS

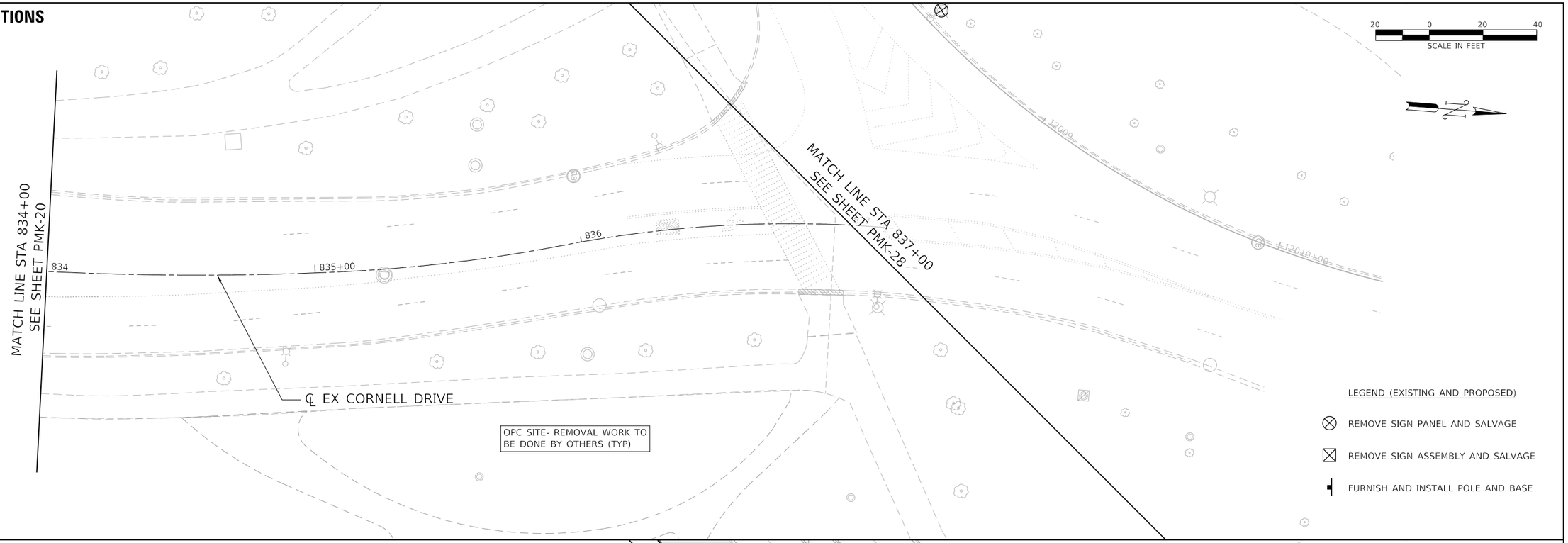


## PROPOSED CONDITIONS

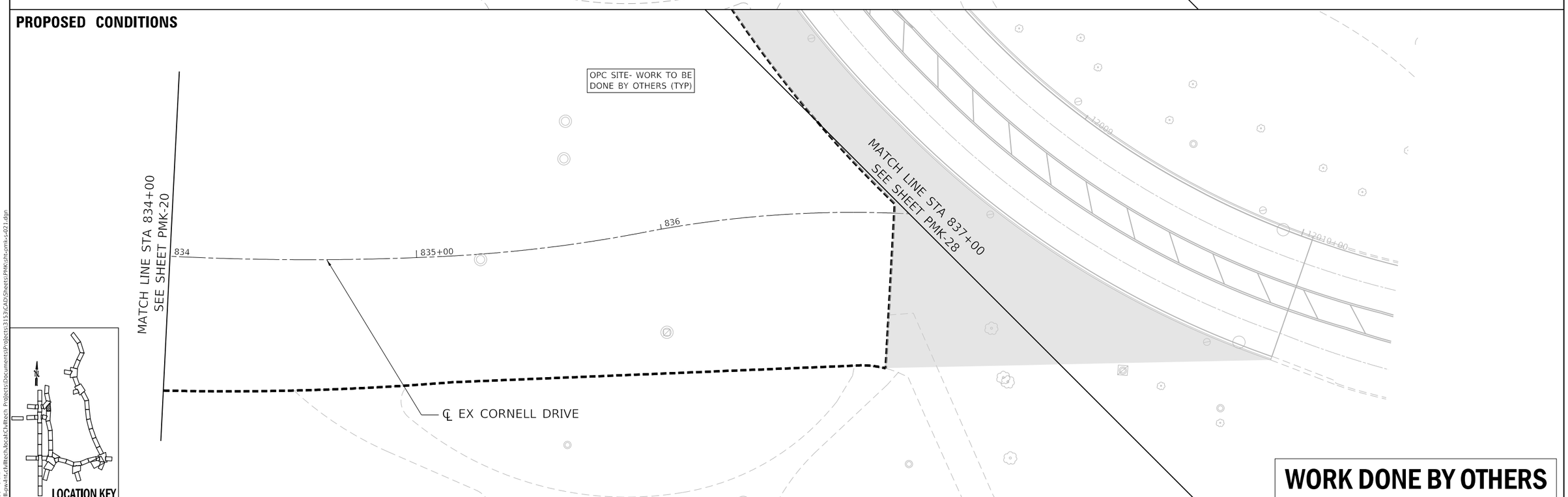





# WORK DONE BY OTHERS

| | | | | | |
|---|---|---|---|---|---|
| DESIGN: | MG | | | $REV3 | |
| DRAWN: | MG | | | $REV2 | |
| CHECKED: | DM | | | $REV1 | |
| APPROVED: | | NO. | BY | DATE | DESCRIPTION |
| DATE: 01/22/2021 | | REVISIONS | | | |

CDOT CHICAGO DEPARTMENT OF TRANSPORTATION

C*NECT

PAVEMENT MARKING AND SIGNING
EXISTING & PROPOSED CONDITIONS
S. CORNELL DR.

JACKSON PARK MOBILITY IMPROVEMENTS

STA. 834+00 TO STA. 837+00

CONTRACT NO. -
PROJECT NO. B-7-203
SCALE: 1"=20'

| TOTAL SHEETS | SHEET NO. |
|---|---|
| 1434 | 710 |

DRAWING NO. PMK-21

PLOT DATE: 2/15/2021
PLOT SCALE: 40.0000 ' / in.
FILE NAME: pw:\\cdot-pw-int.civiltech.local:Civiltech Projects\Documents\Projects\3153\CAD\Sheets\PMK\sht-pmk-s-021.dgn

## EXISTING CONDITIONS

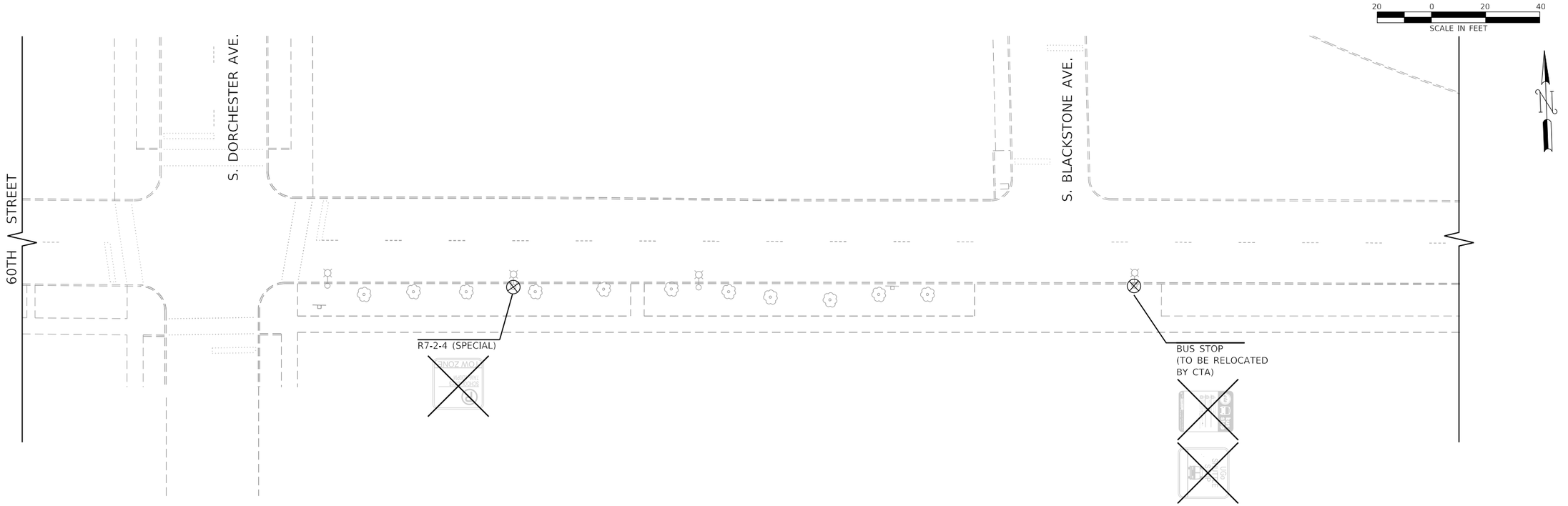


## PROPOSED CONDITIONS

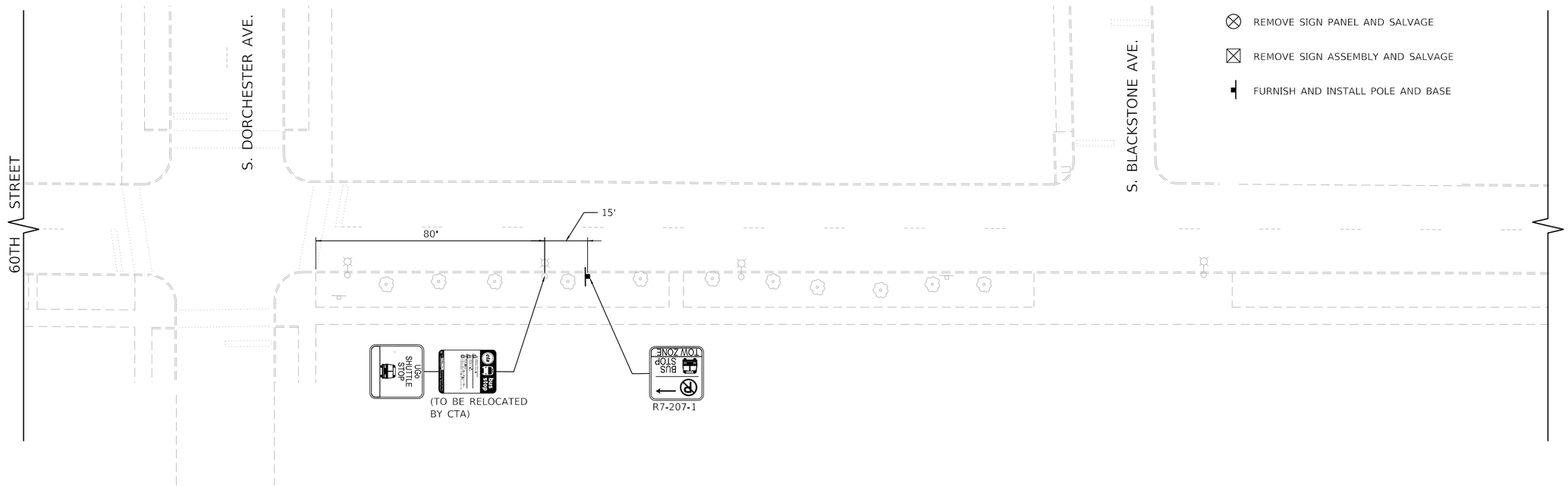


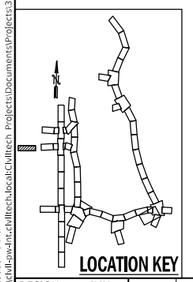


| | | | | | |
|---|---|---|---|---|---|
| DESIGN: IMU | | | | ≤REV3 | |
| DRAWN: IMU | | | | ≤REV2 | |
| CHECKED: DM | | | | ≤REV1 | |
| APPROVED: | NO. | BY | DATE | DESCRIPTION | |
| DATE: 01/22/2021 | REVISIONS | | | | |

CDOT CHICAGO DEPARTMENT OF TRANSPORTATION

C★NECT

**PAVEMENT MARKING AND SIGNING**
**EXISTING & PROPOSED CONDITIONS**
**S. DORCHESTER AVE. / E. 60TH ST.**

**JACKSON PARK MOBILITY IMPROVEMENTS**

STA. 834+00 TO STA. 837+00

| | |
|---|---|
| CONTRACT NO. - | TOTAL SHEETS 1434 |
| PROJECT NO. B-7-203 | SHEET NO. 711 |
| SCALE: 1"=20' | DRAWING NO. PMK-22 |

PLOT DATE: 2/15/2021
PLOT SCALE: 40.0000 ' / in.
FILE NAME: pw:\\cdot-pw-int-civiltech.bcat\Civiltech Projects\Documents\Projects\3153\CAD\Sheets\PMK-sht-pmk-c422.dgn

## EXISTING CONDITIONS

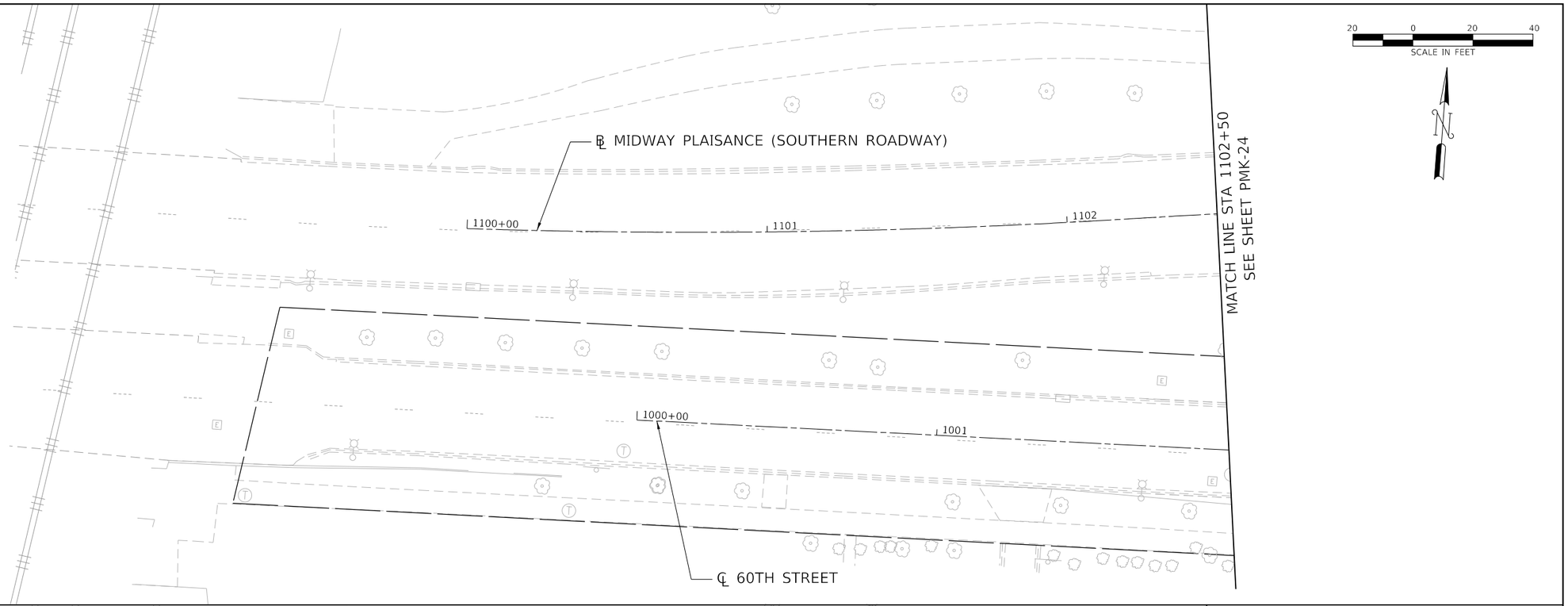


LEGEND (EXISTING AND PROPOSED)

- REMOVE SIGN PANEL AND SALVAGE
- REMOVE SIGN ASSEMBLY AND SALVAGE
- FURNISH AND INSTALL POLE AND BASE

## PROPOSED CONDITIONS

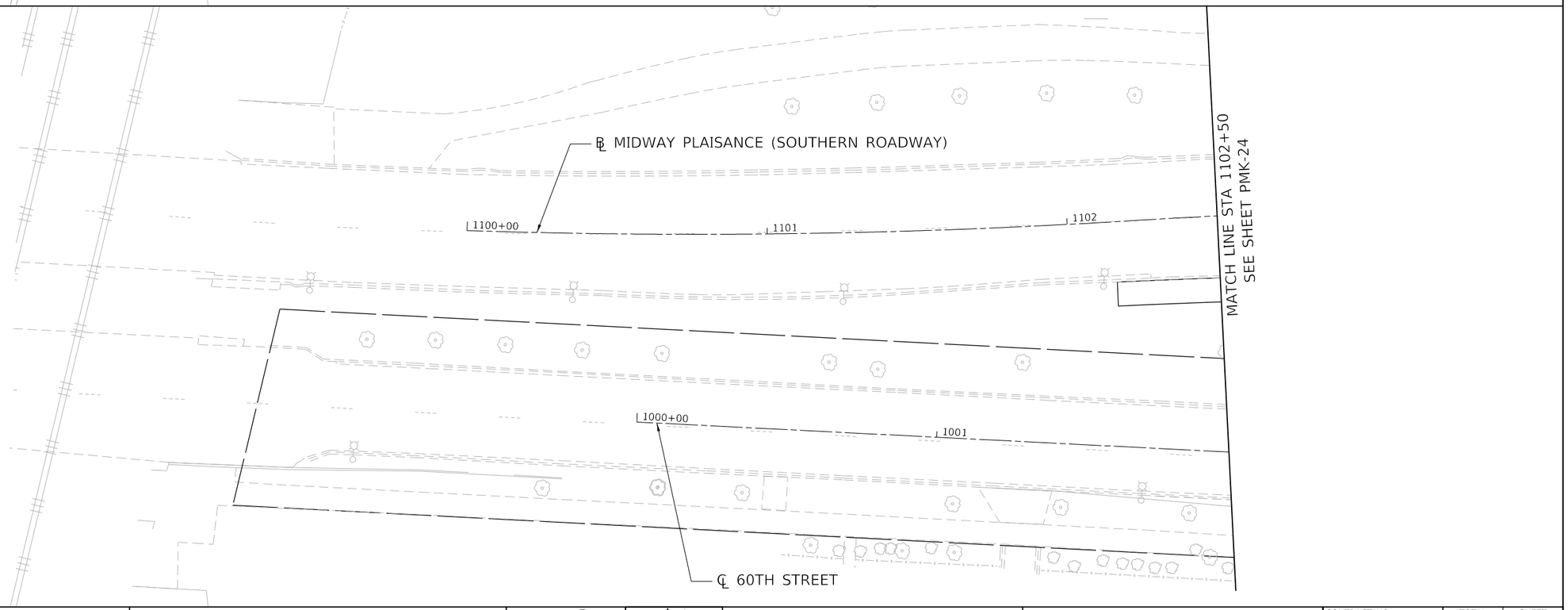


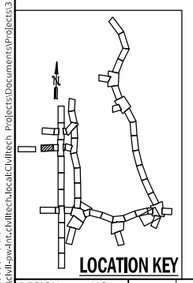


LOCATION KEY

| | | | | | |
|---|---|---|---|---|---|
| DESIGN: | MG | | | $REV3 | |
| DRAWN: | MG | | | $REV2 | |
| CHECKED: | DM | | | $REV1 | |
| APPROVED: | | NO. | BY | DATE | DESCRIPTION |
| DATE: 01/22/2021 | | REVISIONS | | | |

CDOT CHICAGO DEPARTMENT OF TRANSPORTATION

C*NECT

PAVEMENT MARKING AND SIGNING
EXISTING & PROPOSED CONDITIONS
E. MIDWAY PLAISANCE (S)

JACKSON PARK MOBILITY IMPROVEMENTS

STA. 1100+00 TO STA. 1102+50

| | | |
|---|---|---|
| CONTRACT NO. - | TOTAL SHEETS 1434 | SHEET NO. 712 |
| PROJECT NO. B-7-203 | DRAWING NO. PMK-23 | |
| SCALE: 1"=20' | | |

PLOT DATE: 2/15/2021
PLOT SCALE: 40.0000 ' / in.
FILE NAME: pw:\\civil-pw-int.civiltech.local:Civiltech Projects\Documents\Projects\3153\CAD\Sheets\PMK\sht-pmk-s-023.dgn

## EXISTING CONDITIONS

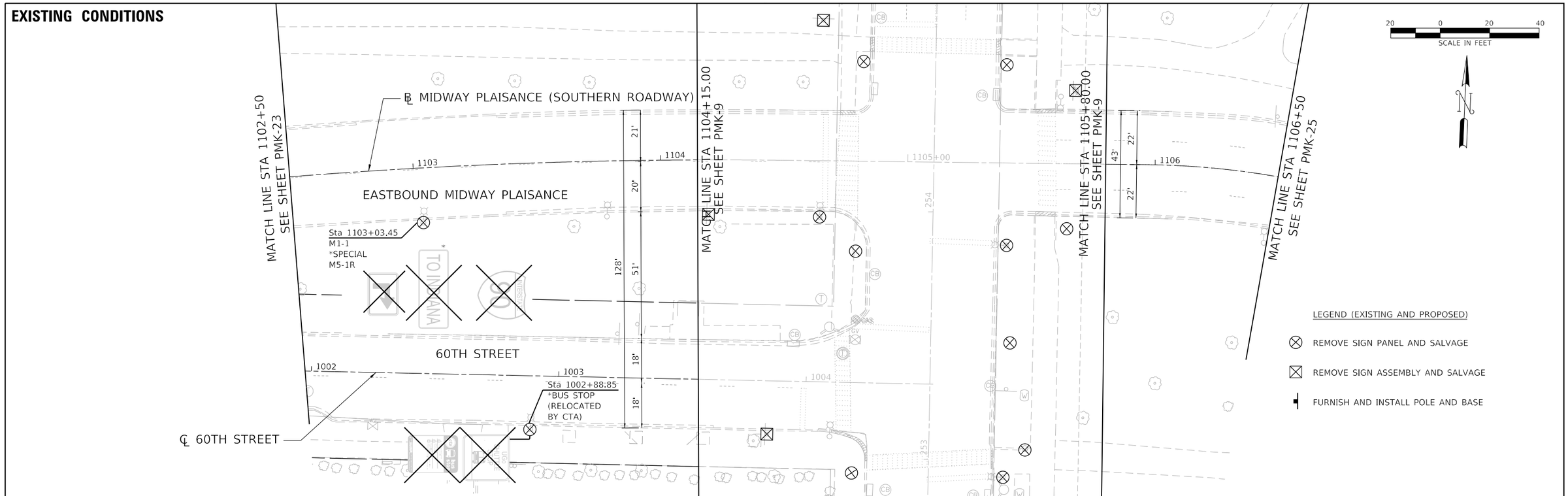


## PROPOSED CONDITIONS

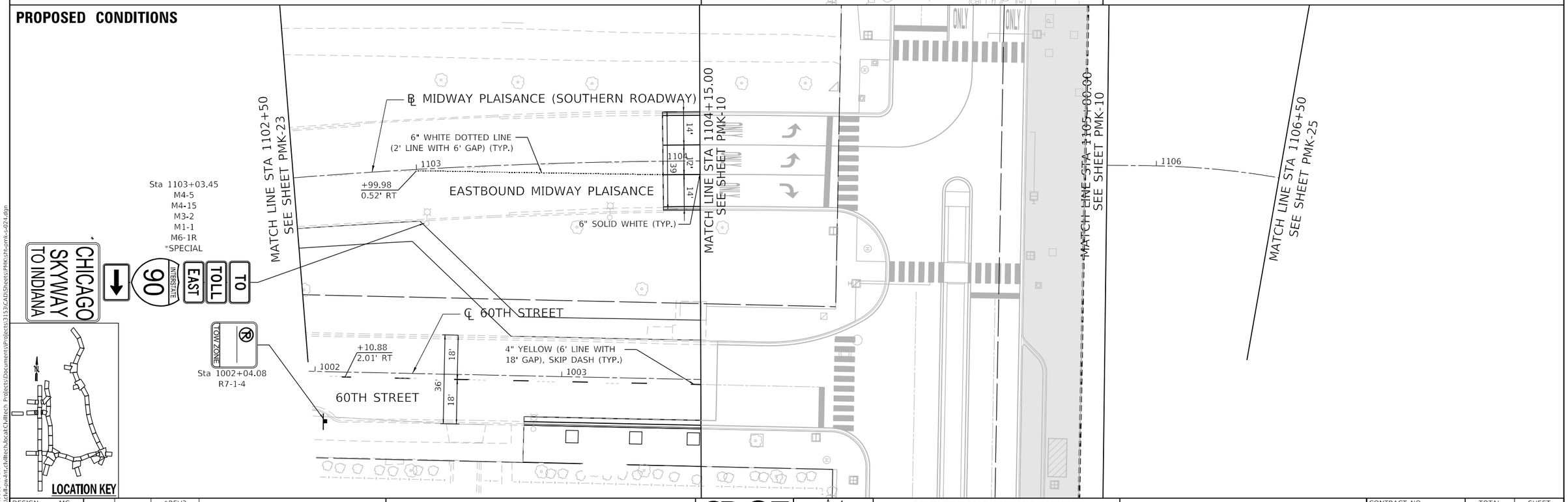


| | | | | | |
|---|---|---|---|---|---|
| DESIGN: | MG | | | $REV3 | |
| DRAWN: | MG | | | $REV2 | |
| CHECKED: | DM | | | $REV1 | |
| APPROVED: | | NO. | BY | DATE | DESCRIPTION |
| DATE: 01/22/2021 | | REVISIONS | | | |

CDOT CHICAGO DEPARTMENT OF TRANSPORTATION

C*NECT

PAVEMENT MARKING AND SIGNING
EXISTING & PROPOSED CONDITIONS
E. MIDWAY PLAISANCE (S)

JACKSON PARK MOBILITY IMPROVEMENTS

STA. 1102+50 TO STA. 1106+50

| | | | |
|---|---|---|---|
| CONTRACT NO. - | TOTAL SHEETS | SHEET NO. | |
| PROJECT NO. B-7-203 | 1434 | 713 | |
| SCALE: 1"=20' | DRAWING NO. PMK-24 | | |

PLOT DATE: 2/15/2021
PLOT SCALE: 40.0000 ' / in.
FILE NAME: pw:\\cdot-pw-int.civiltech.local:Civiltech Projects\Documents\Projects\3153\CAD\Sheets\PMK\sht-pmk-s-024.dgn

## EXISTING CONDITIONS

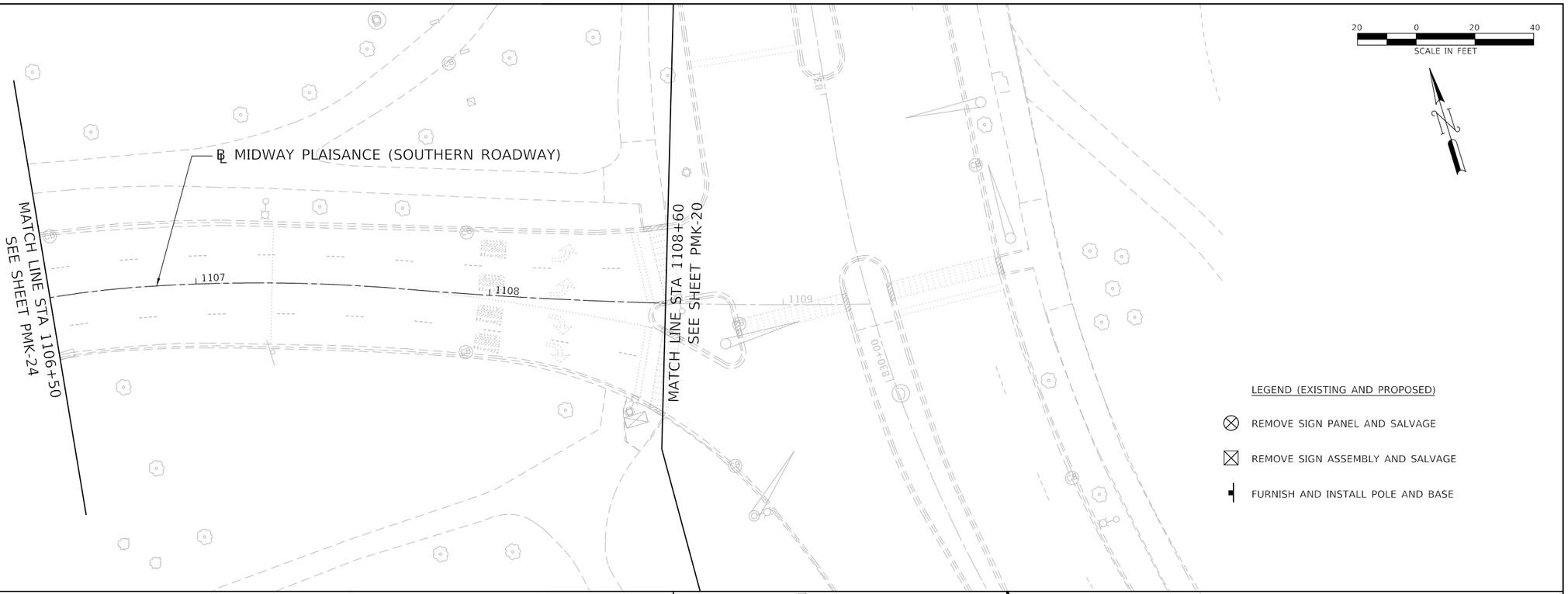


## PROPOSED CONDITIONS

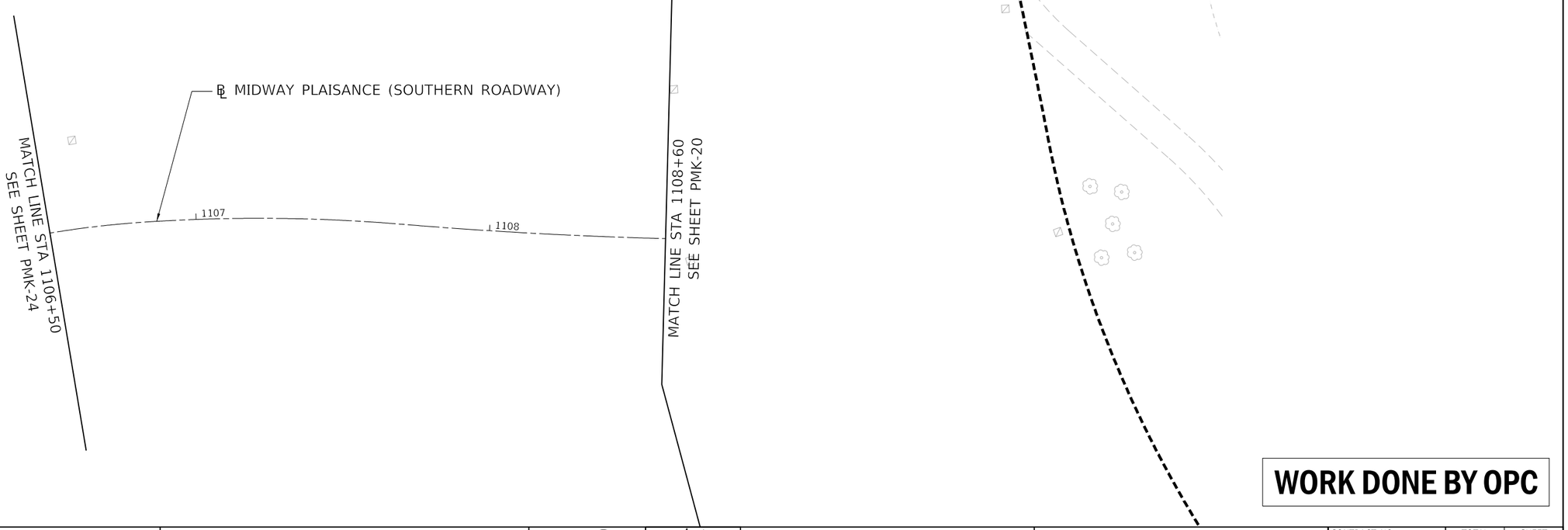


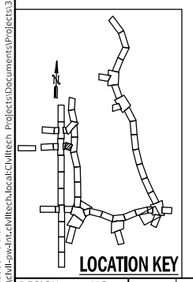


**WORK DONE BY OPC**

| | | | | |
|---|---|---|---|---|
| DESIGN: MG | | | $REV3 | |
| DRAWN: MG | | | $REV2 | |
| CHECKED: DM | | | $REV1 | |
| APPROVED: | NO. | BY | DATE | DESCRIPTION |
| DATE: 01/22/2021 | REVISIONS | | | |

CDOT CHICAGO DEPARTMENT OF TRANSPORTATION

C*NECT

PAVEMENT MARKING AND SIGNING
EXISTING & PROPOSED CONDITIONS
E. MIDWAY PLAISANCE (S)

JACKSON PARK MOBILITY IMPROVEMENTS

STA. 1106+50 TO STA. 1108+60

| | | | |
|---|---|---|---|
| CONTRACT NO. - | | TOTAL SHEETS | SHEET NO. |
| PROJECT NO. B-7-203 | | 1434 | 714 |
| SCALE: 1"=20' | | DRAWING NO. PMK-25 | |

PLOT DATE: 2/15/2021
PLOT SCALE: 40.0000 ' / in.
FILE NAME: pw:\\ckl-pw-fnt.ckltech.local:CklItech Projects:Documents\Projects\3153\CAD\Sheets\PMK\sht-pmk-s-025.dgn

## EXISTING CONDITIONS

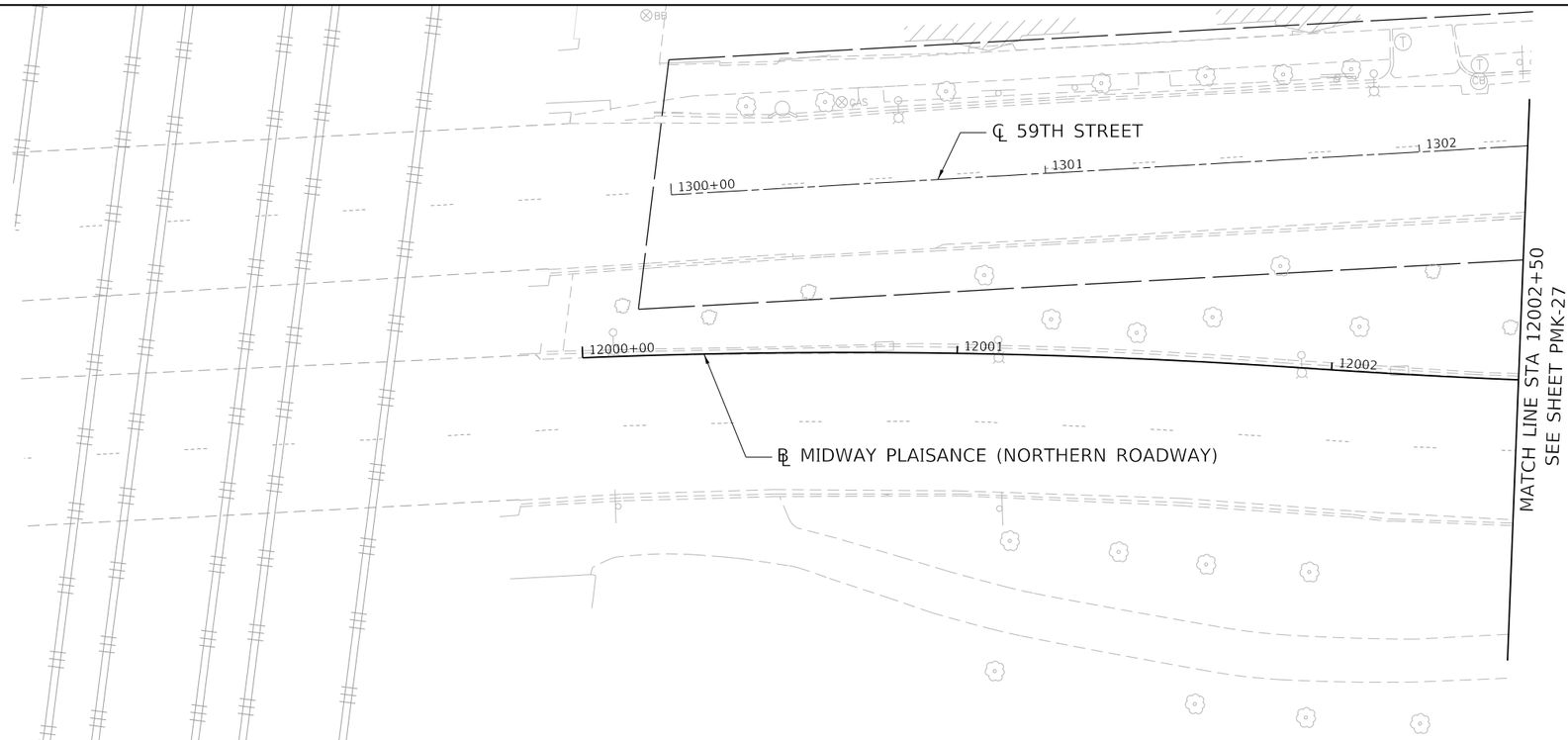


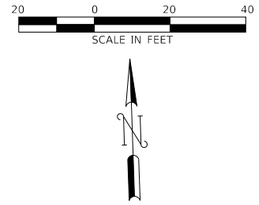


LEGEND (EXISTING AND PROPOSED)

- REMOVE SIGN PANEL AND SALVAGE
- REMOVE SIGN ASSEMBLY AND SALVAGE
- FURNISH AND INSTALL POLE AND BASE

## PROPOSED CONDITIONS

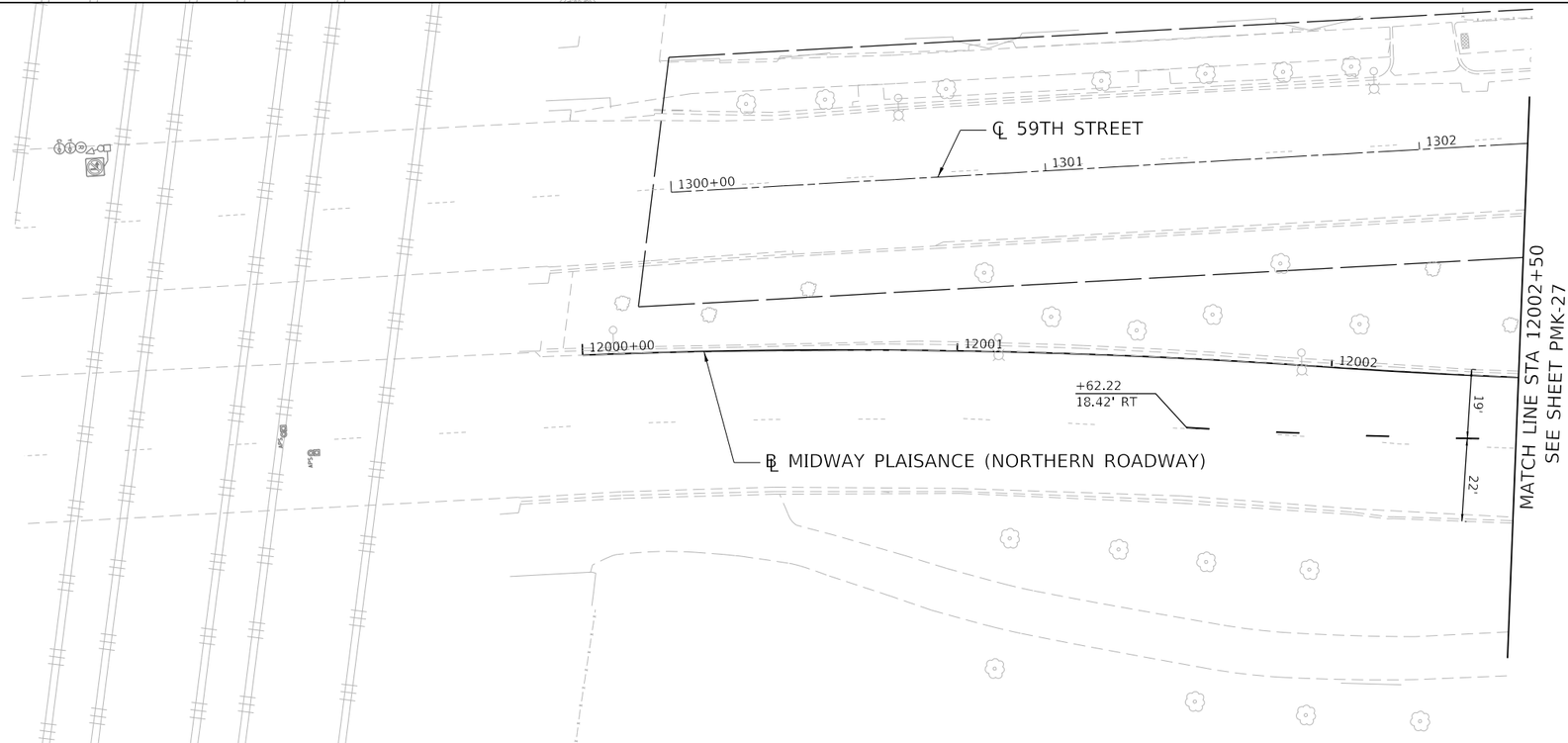


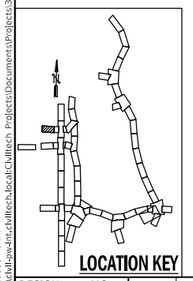


| | | | | | |
|---|---|---|---|---|---|
| DESIGN: MG | | | | ŞREV3 | |
| DRAWN: MG | | | | ŞREV2 | |
| CHECKED: DM | | | | ŞREV1 | |
| APPROVED: | NO. | BY | DATE | DESCRIPTION | |
| DATE: 01/22/2021 | REVISIONS | | | | |

CDOT CHICAGO DEPARTMENT OF TRANSPORTATION

C*NECT

**PAVEMENT MARKING AND SIGNING**
**EXISTING & PROPOSED CONDITIONS**
**E. MIDWAY PLAISANCE (N)**

**JACKSON PARK MOBILITY IMPROVEMENTS**

STA. 12000+00 TO STA. 12002+50

| | | | |
|---|---|---|---|
| CONTRACT NO. - | | TOTAL SHEETS | SHEET NO. |
| PROJECT NO. B-7-203 | | 1434 | 715 |
| SCALE: 1"=20' | | DRAWING NO. PMK-26 | |

PLOT DATE: 2/15/2021
PLOT SCALE: 40.0000 ' / in.
FILE NAME: pw:\\cdot-pw-int-civiltech.bcat\Civiltech Projects\Documents\Projects\3153\CADD\Sheets\PMK\cdt-pmk-c-026.dgn

## EXISTING CONDITIONS

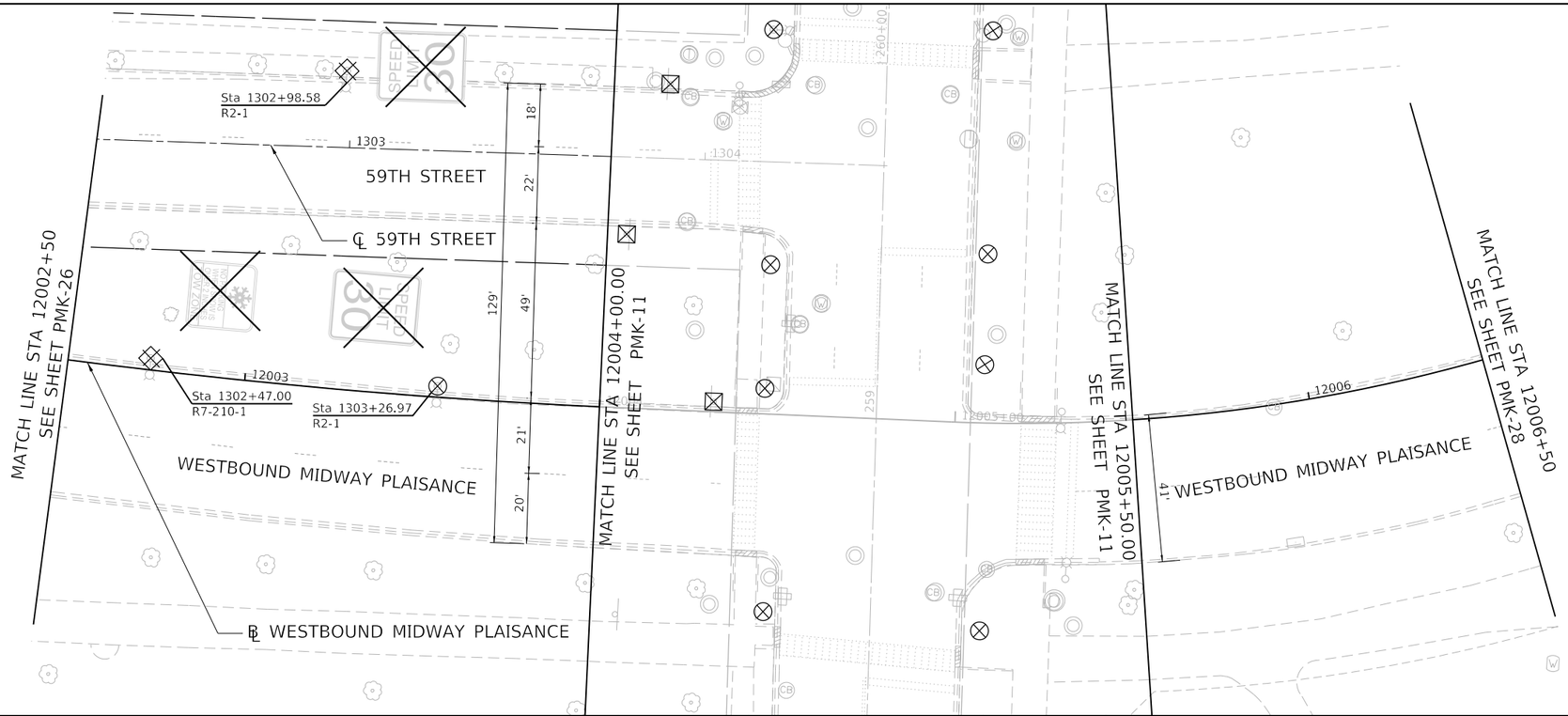


20 0 20 40
SCALE IN FEET

N

LEGEND (EXISTING AND PROPOSED)

- ⊗ REMOVE SIGN PANEL AND SALVAGE
- ⊠ REMOVE SIGN ASSEMBLY AND SALVAGE
- FURNISH AND INSTALL POLE AND BASE

## PROPOSED CONDITIONS

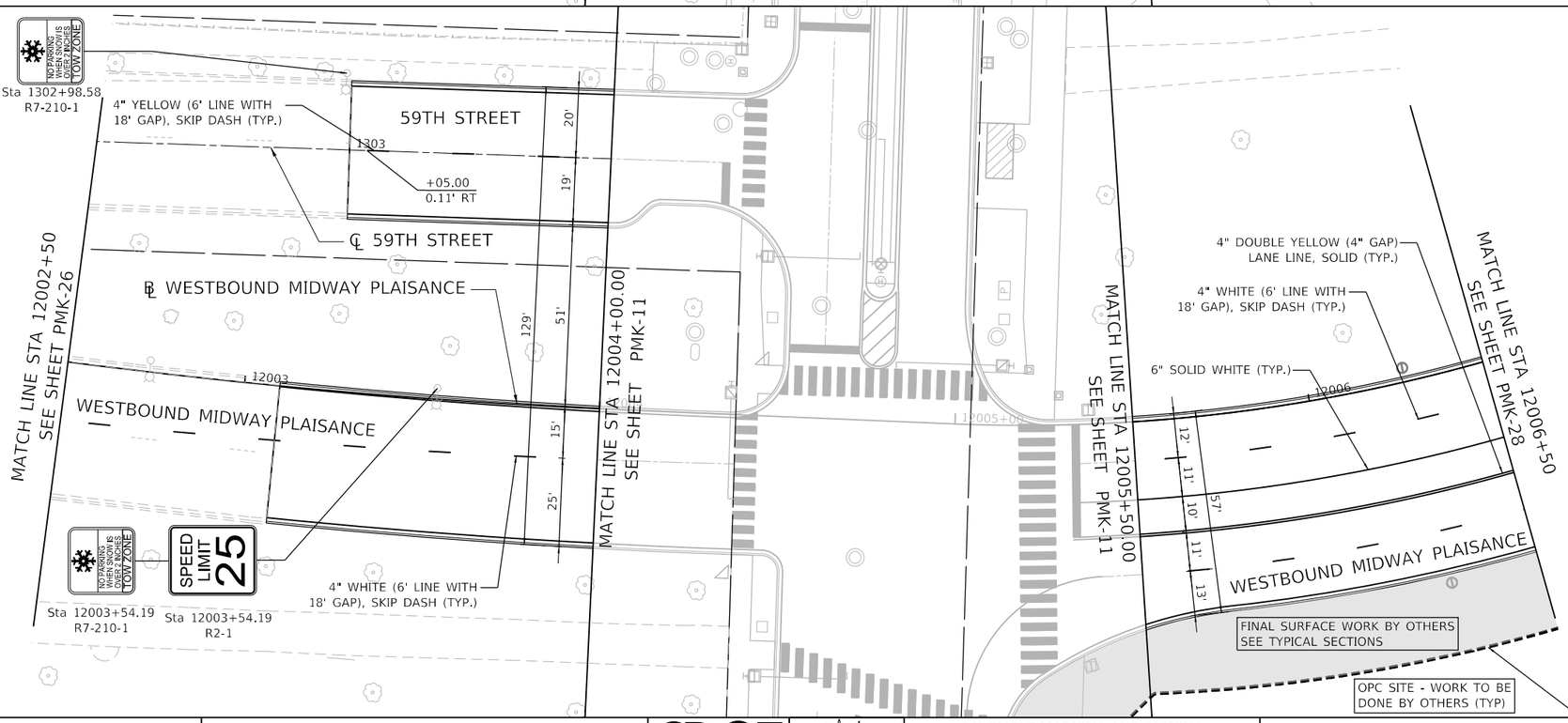


LOCATION KEY

| | | | | | |
|---|---|---|---|---|---|
| DESIGN: | MG | | | $REV3 | |
| DRAWN: | MG | | | $REV2 | |
| CHECKED: | DM | | | $REV1 | |
| APPROVED: | | NO. | BY | DATE | DESCRIPTION |
| DATE: 01/22/2021 | | REVISIONS | | | |

CDOT CHICAGO DEPARTMENT OF TRANSPORTATION

C*NECT

**PAVEMENT MARKING AND SIGNING**
**EXISTING & PROPOSED CONDITIONS**
**E. MIDWAY PLAISANCE (N)**

**JACKSON PARK MOBILITY IMPROVEMENTS**

STA. 12002+50 TO STA. 12006+50

| | |
|---|---|
| CONTRACT NO. | - |
| PROJECT NO. | B-7-203 |
| SCALE: | 1"=20' |

| TOTAL SHEETS | SHEET NO. |
|---|---|
| 1434 | 716 |

DRAWING NO. **PMK-27**

PLOT DATE: 2/15/2021
PLOT SCALE: 40.0000 ' / in.
FILE NAME: pw:\cdot-sw-int.dvltech.local:Dvltech Projects\Documents\Projects\3153\CAD\Sheets\PMK\cht-comk-s-027.dgn

## EXISTING CONDITIONS

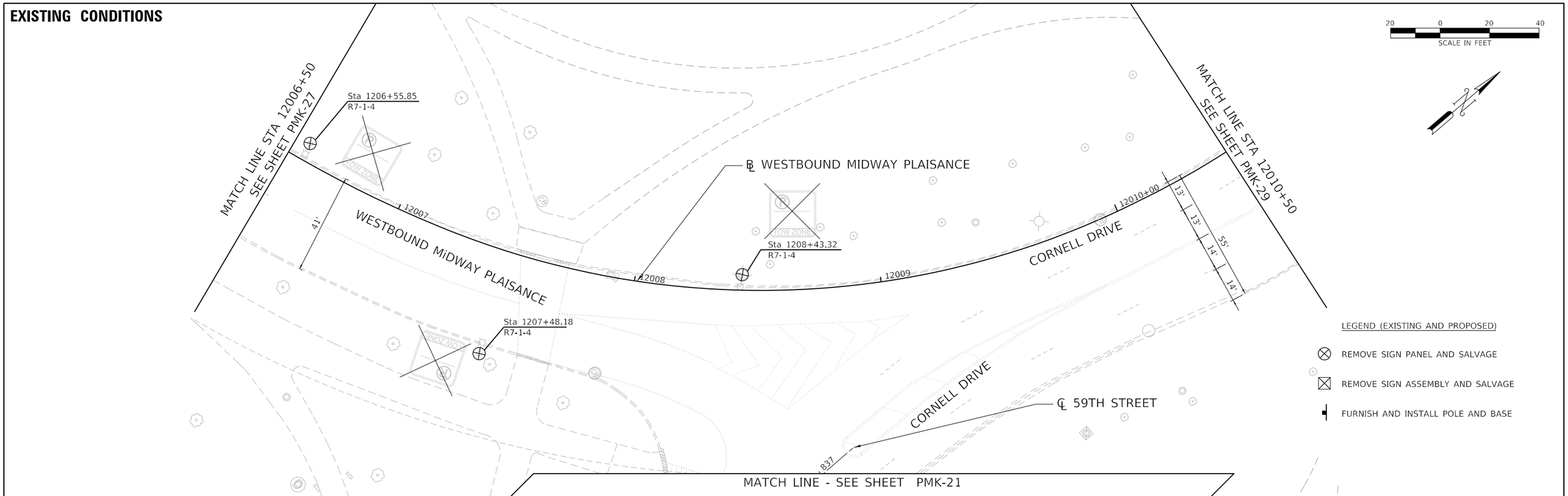


## PROPOSED CONDITIONS

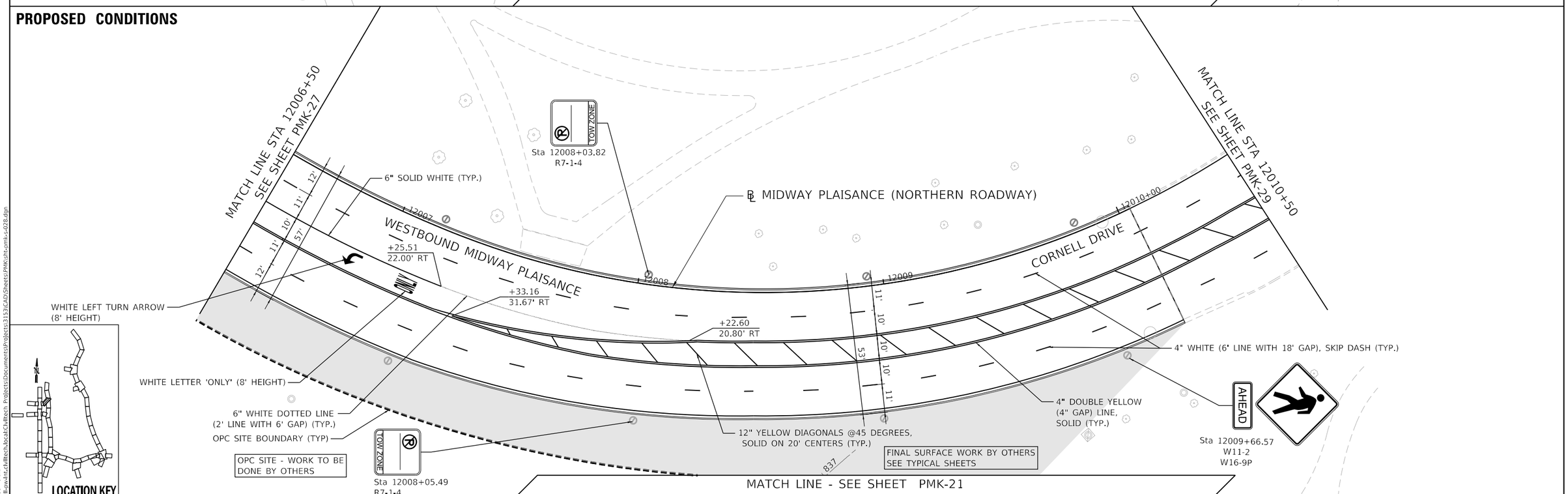


| | | | | | |
|---|---|---|---|---|---|
| DESIGN: | MG | | | SREV3 | |
| DRAWN: | MG | | | SREV2 | |
| CHECKED: | DM | | | SREV1 | |
| APPROVED: | | NO. | BY | DATE | DESCRIPTION |
| DATE: 01/22/2021 | | REVISIONS | | | |

CDOT CHICAGO DEPARTMENT OF TRANSPORTATION

C*NECT

PAVEMENT MARKING AND SIGNING
EXISTING & PROPOSED CONDITIONS
E. MIDWAY PLAISANCE (N)

JACKSON PARK MOBILITY IMPROVEMENTS

STA. 12006+50 TO STA. 12010+50

CONTRACT NO. -
PROJECT NO. B-7-203
SCALE: 1"=20'

TOTAL SHEETS 1434
SHEET NO. 717
DRAWING NO. PMK-28

PLOT DATE: 2/15/2021
PLOT SCALE: 40.0000 ' / in.
FILE NAME: pw:\\cdot-pw-int.civiltech.local:Civiltech Projects\Documents\Projects\3153\CAD\Sheets\PMK\sht-pmk-s-028.dgn

## EXISTING CONDITIONS

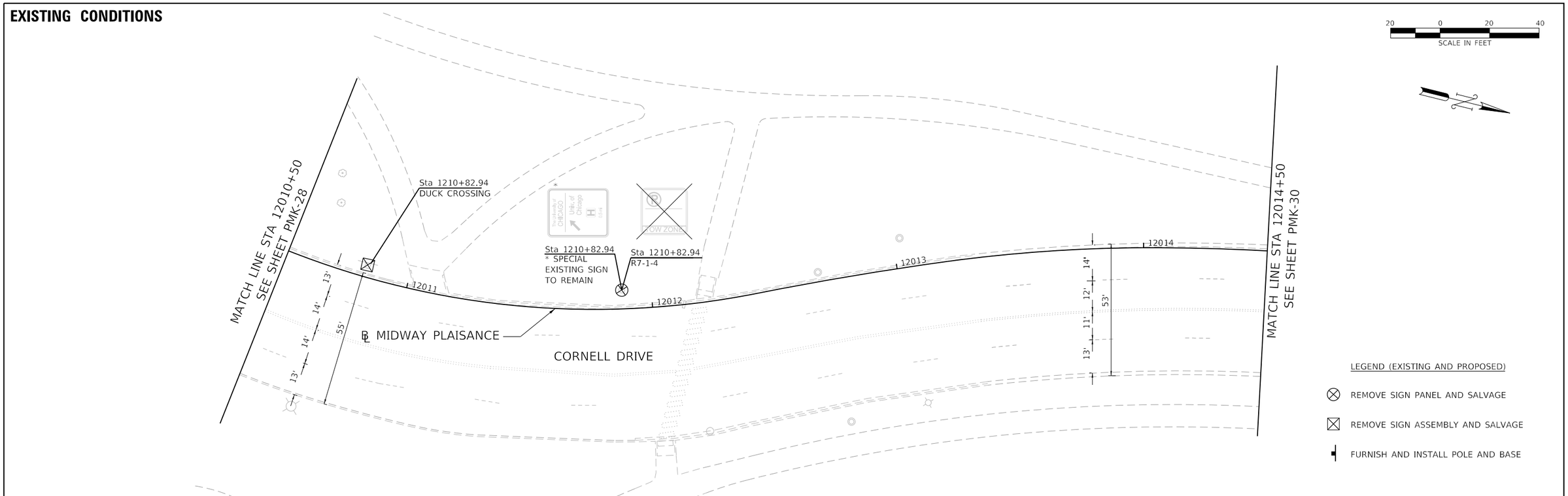


## PROPOSED CONDITIONS

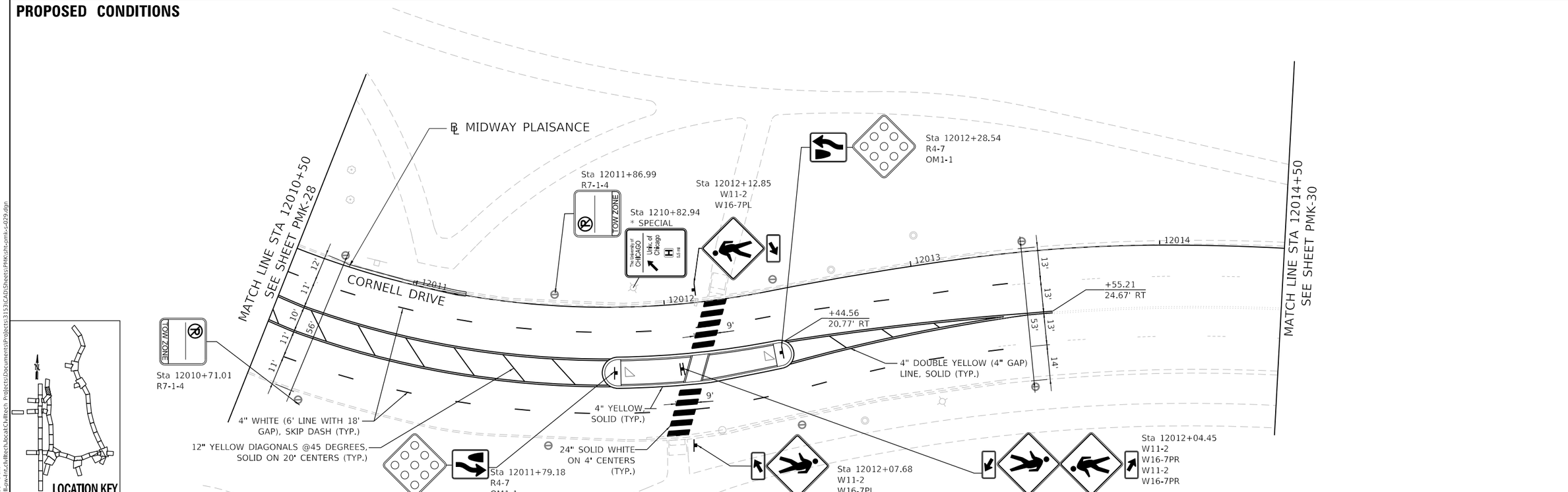





PLOT DATE: 2/15/2021
PLOT SCALE: 40.0000 ' / in.
FILE NAME: pw:\\civil-pw-int.civiltech.local:Civiltech Projects\Documents\Projects\3153\CAD\Sheets\PMK\sht-pmk-s-029.dgn

| | | | | | |
|---|---|---|---|---|---|
| DESIGN: | MG | | | $REV3 | |
| DRAWN: | MG | | | $REV2 | |
| CHECKED: | DM | | | $REV1 | |
| APPROVED: | | NO. | BY | DATE | DESCRIPTION |
| DATE: 01/22/2021 | | REVISIONS | | | |

CDOT CHICAGO DEPARTMENT OF TRANSPORTATION

C*NECT

PAVEMENT MARKING AND SIGNING
EXISTING & PROPOSED CONDITIONS
E. MIDWAY PLAISANCE (N)

JACKSON PARK MOBILITY IMPROVEMENTS

STA. 12010+50 TO STA. 12014+50

| | | | |
|---|---|---|---|
| CONTRACT NO. - | TOTAL SHEETS 1434 | SHEET NO. 718 | |
| PROJECT NO. B-7-203 | DRAWING NO. PMK-29 | | |
| SCALE: 1"=20' | | | |

## EXISTING CONDITIONS

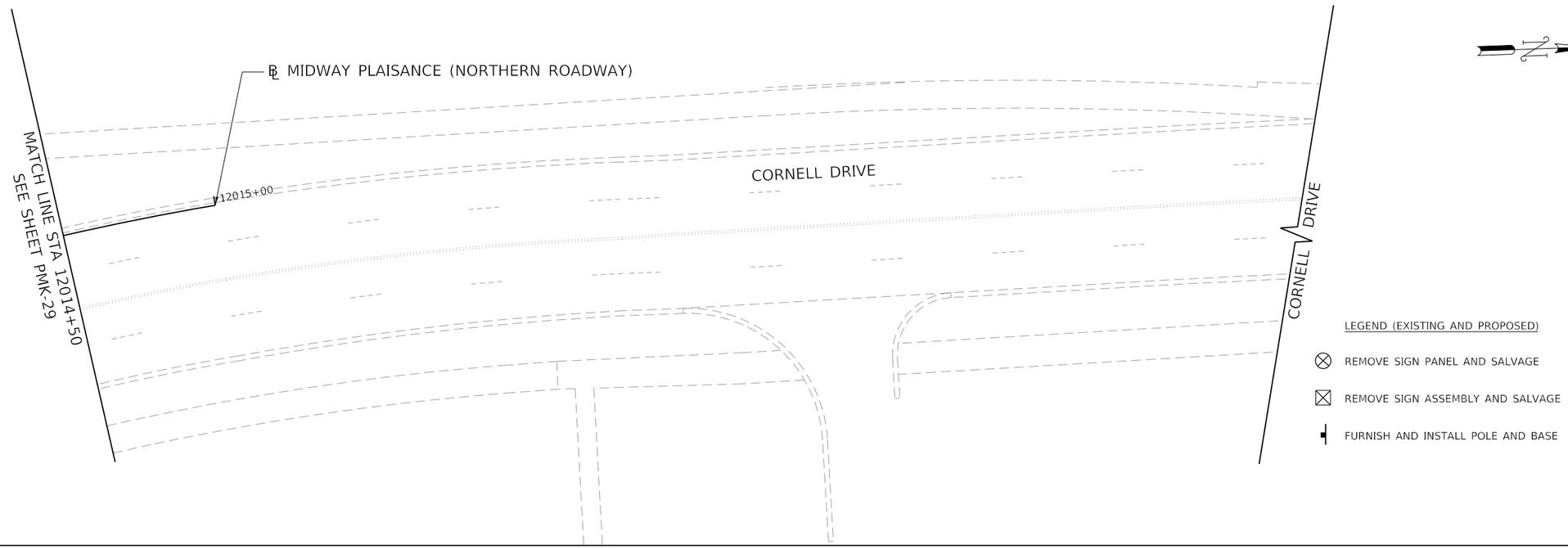


## PROPOSED CONDITIONS

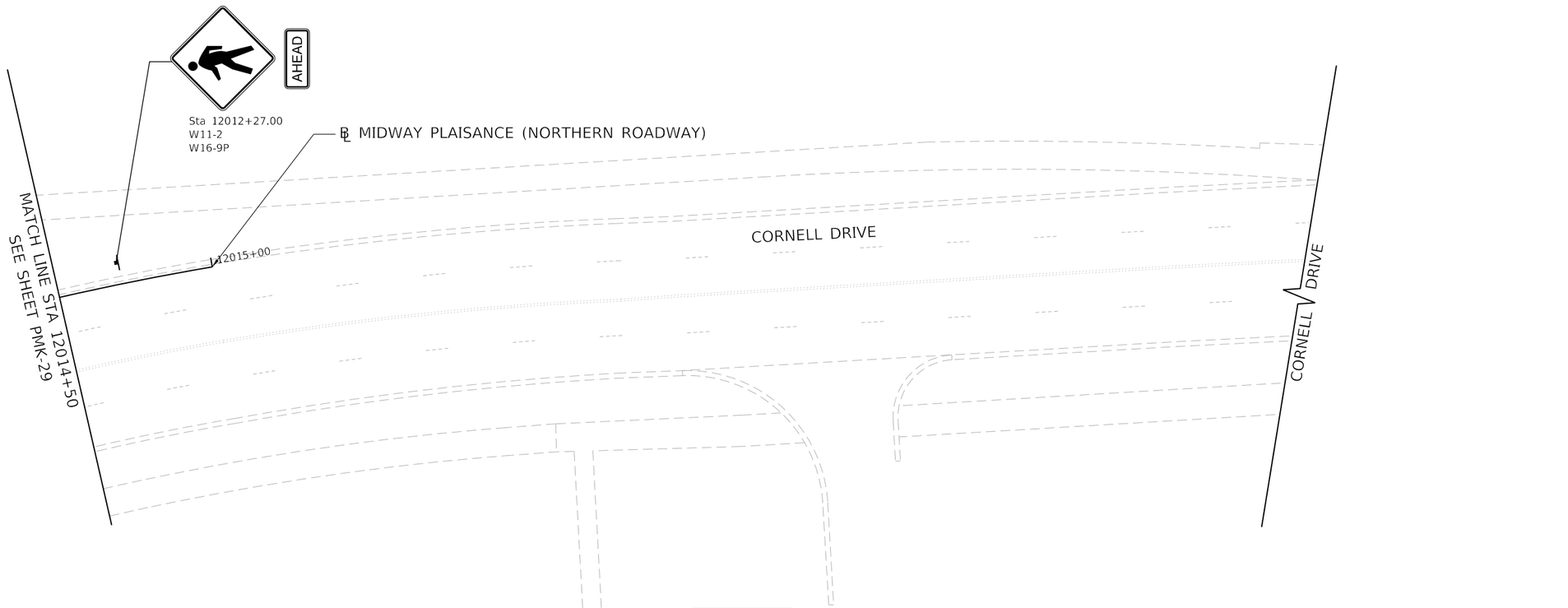


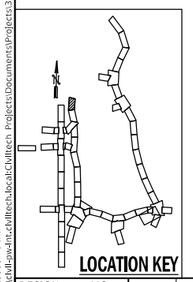


| | | | | | |
|---|---|---|---|---|---|
| DESIGN: MG | | | | $REV3 | |
| DRAWN: MG | | | | $REV2 | |
| CHECKED: DM | | | | $REV1 | |
| APPROVED: | NO. | BY | DATE | DESCRIPTION | |
| DATE: 01/22/2021 | REVISIONS | | | | |

CDOT CHICAGO DEPARTMENT OF TRANSPORTATION

C*NECT

**PAVEMENT MARKING AND SIGNING**
**EXISTING & PROPOSED CONDITIONS**
**E. MIDWAY PLAISANCE (N)**

**JACKSON PARK MOBILITY IMPROVEMENTS**

STA. 12014+50 TO STA. 12015+00

| | | | |
|---|---|---|---|
| CONTRACT NO. - | | TOTAL SHEETS | SHEET NO. |
| PROJECT NO. B-7-203 | | 1434 | 719 |
| SCALE: 1"=20' | | DRAWING NO. PMK-30 | |

PLOT DATE: 2/15/2021
PLOT SCALE: 40.0000 ' / in.
FILE NAME: pw:\\cdot-pw-int-civiltech.local\Civiltech Projects\Documents\Projects\3153\CAD\Sheets\PMK\cdt-pmk-c-d30.dgn

## EXISTING CONDITIONS

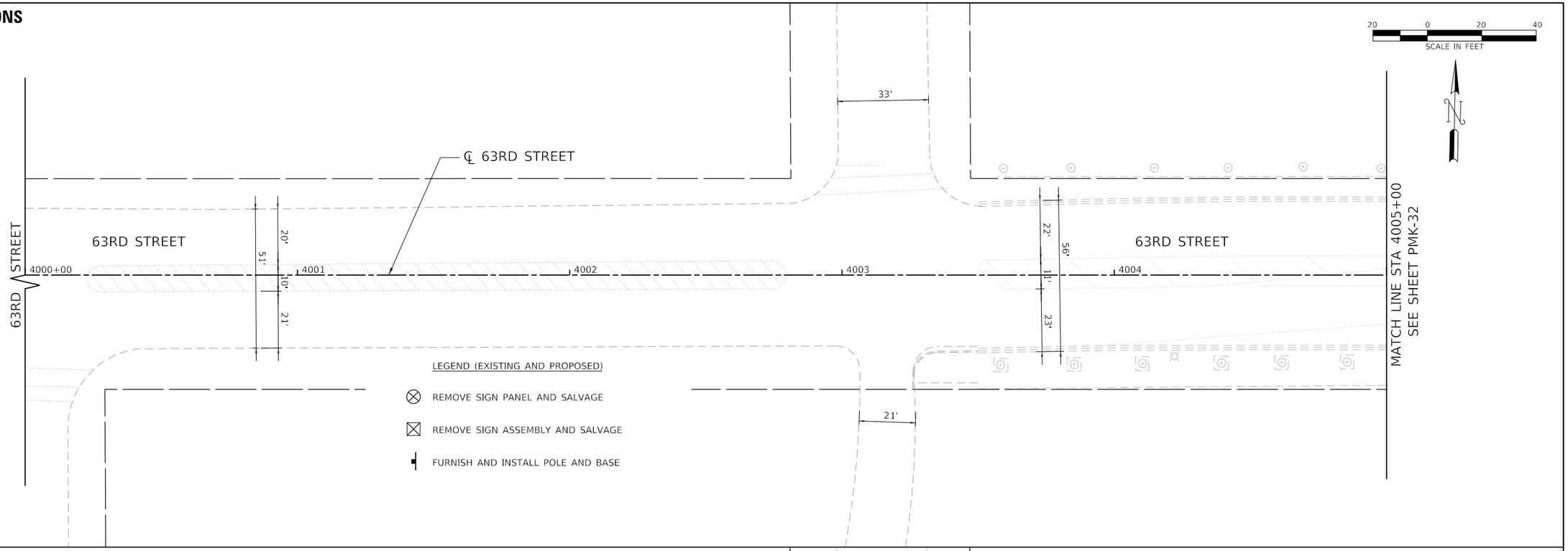


## PROPOSED CONDITIONS

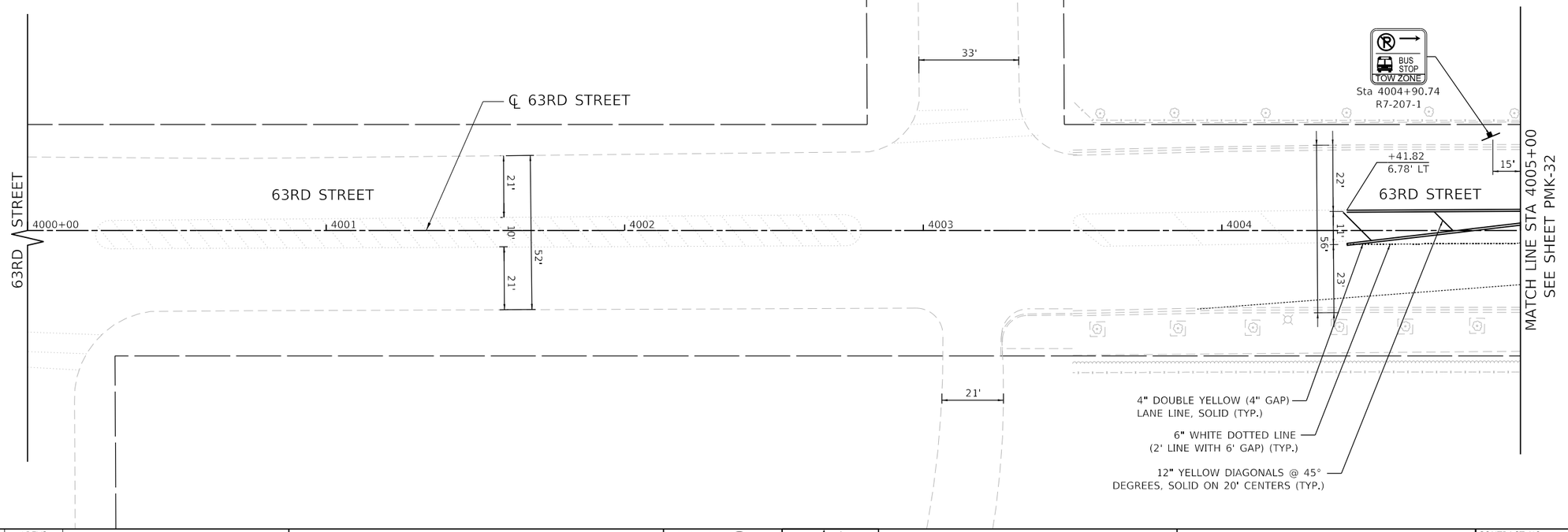


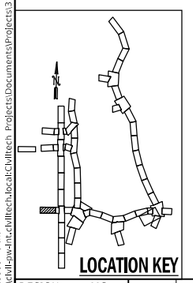


| | | | | |
|---|---|---|---|---|
| DESIGN: MG | | | $REV3 | |
| DRAWN: MG | | | $REV2 | |
| CHECKED: DM | | | $REV1 | |
| APPROVED: | NO. | BY | DATE | DESCRIPTION |
| DATE: 01/22/2021 | REVISIONS | | | |

CDOT CHICAGO DEPARTMENT OF TRANSPORTATION

C*NECT

**PAVEMENT MARKING AND SIGNING**
**EXISTING & PROPOSED CONDITIONS**
**E. 63RD ST.**

**JACKSON PARK MOBILITY IMPROVEMENTS**

STA. 4000+00 TO STA. 4005+00

| | |
|---|---|
| CONTRACT NO. - | TOTAL SHEETS 1434 / SHEET NO. 720 |
| PROJECT NO. B-7-203 | DRAWING NO. PMK-31 |
| SCALE: 1"=20' | |

PLOT DATE: 2/15/2021
PLOT SCALE: 40.0000 ' / in.
FILE NAME: pw:\ckl-pw-fnt.ekltech.local:Ckltech Projects:Documents\Projects\3153\CAD\Sheets\PMK\sh-comk-s-031.dgn

## EXISTING CONDITIONS

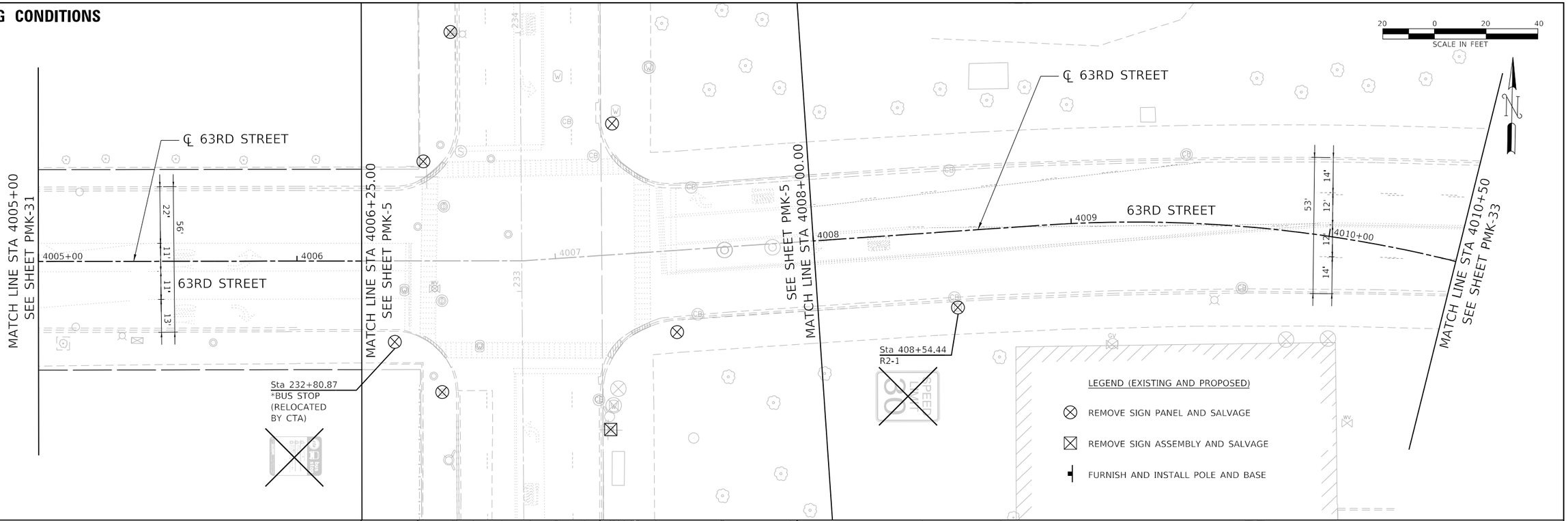


## PROPOSED CONDITIONS

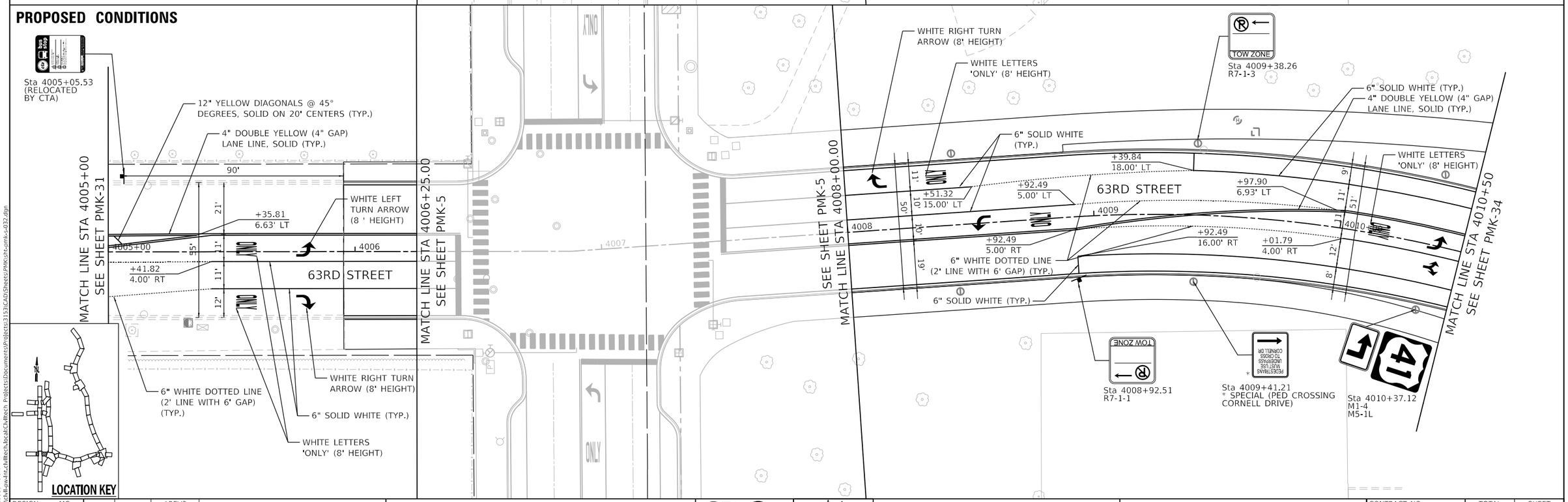


| | | | | | |
|---|---|---|---|---|---|
| DESIGN: | MG | | | $REV3 | |
| DRAWN: | MG | | | $REV2 | |
| CHECKED: | DM | | | $REV1 | |
| APPROVED: | | NO. | BY | DATE | DESCRIPTION |
| DATE: 01/22/2021 | | REVISIONS | | | |

CDOT CHICAGO DEPARTMENT OF TRANSPORTATION

C*NECT

PAVEMENT MARKING AND SIGNING
EXISTING & PROPOSED CONDITIONS
E. 63RD ST.

JACKSON PARK MOBILITY IMPROVEMENTS

STA. 4005+00 TO STA. 4010+50

| | | |
|---|---|---|
| CONTRACT NO. - | TOTAL SHEETS 1434 | SHEET NO. 721 |
| PROJECT NO. B-7-203 | DRAWING NO. PMK-32 | |
| SCALE: 1"=20' | | |

PLOT DATE: 2/15/2021
PLOT SCALE: 40.0000 ' / in.
FILE NAME: pw:\\cdot-pw-int.civiltech.local:Civiltech Projects\Documents\Projects\3153\CAD\Sheets\PMK\sht-pmk-s-032.dgn

# EXISTING CONDITIONS

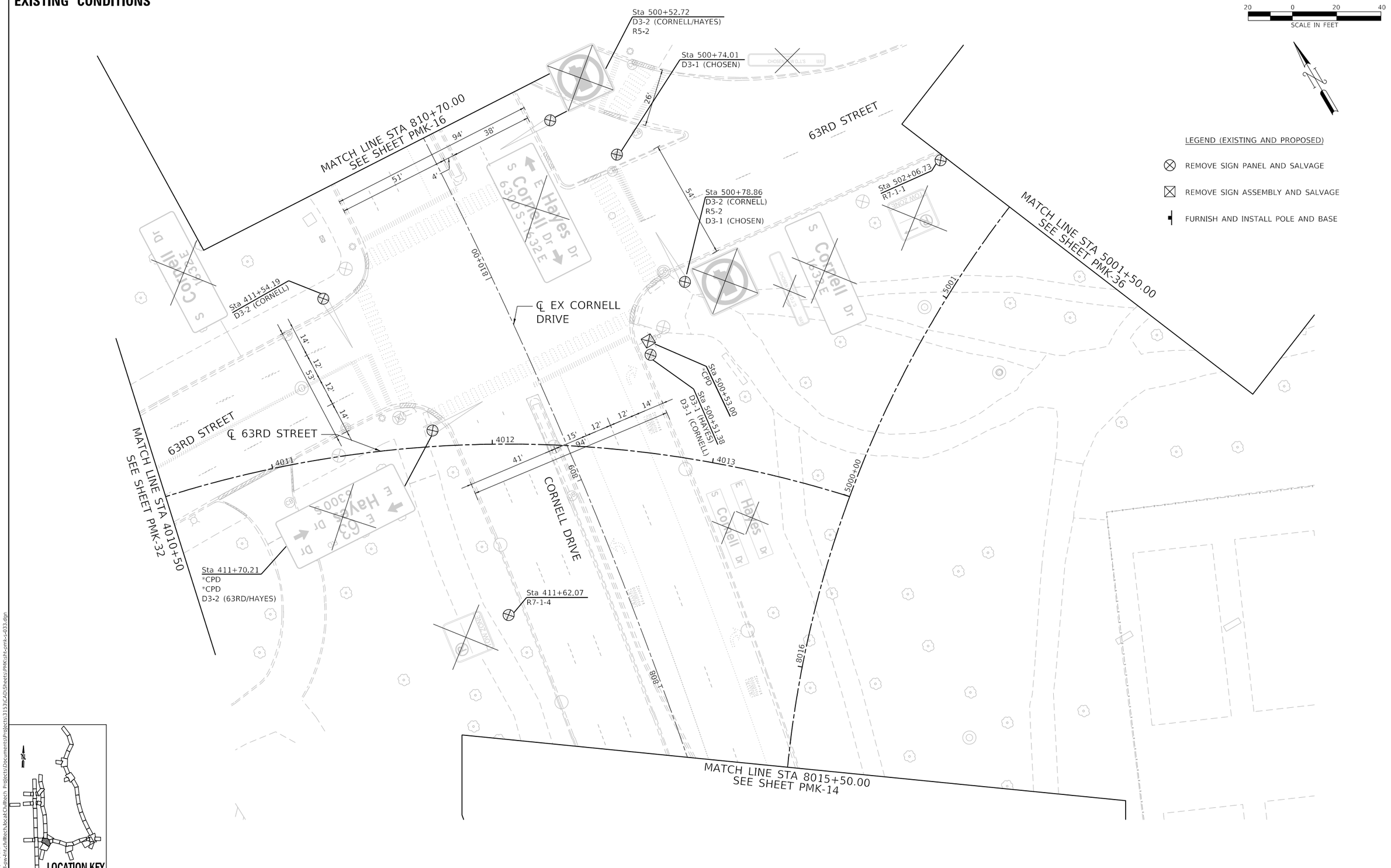


| | | | | |
|---|---|---|---|---|
| DESIGN: MG | | | | |
| DRAWN: MG | | | | |
| CHECKED: DM | | | | |
| APPROVED: | NO. | BY | DATE | DESCRIPTION |
| DATE: 01/22/2021 | REVISIONS | | | |

CDOT CHICAGO DEPARTMENT OF TRANSPORTATION

C*NECT

PAVEMENT MARKING AND SIGNING
EXISTING CONDITIONS
E. 63RD ST./E. HAYES DR./S. CORNELL DR.

JACKSON PARK MOBILITY IMPROVEMENTS

STA. 4010+50 TO STA. 5001+50

| | | |
|---|---|---|
| CONTRACT NO. - | TOTAL SHEETS 1434 | SHEET NO. 722 |
| PROJECT NO. B-7-203 | DRAWING NO. PMK-33 | |
| SCALE: 1"=20' | | |

PLOT DATE: 2/15/2021
PLOT SCALE: 40.0000 ' / in.
FILE NAME: pw:\\civil-pw-int.civiltech.local:Civiltech Projects\Documents\Projects\3153\CAD\Sheets\PMK\sht-pmk-s-033.dgn

## PROPOSED CONDITIONS

20 0 20 40
SCALE IN FEET

LEGEND (EXISTING AND PROPOSED)

- REMOVE SIGN PANEL AND SALVAGE
- REMOVE SIGN ASSEMBLY AND SALVAGE
- FURNISH AND INSTALL POLE AND BASE

MATCH LINE STA 810+70.00
SEE SHEET PMK-16

5001+22.80
*SPECIAL (PED CROSSING CORNELL DRIVE)

PEDESTRIANS MAY USE SIDEWALK UNDERPASS 11TH ST & CORNELL DR

4" WHITE (6' LINE WITH 18' GAP), SKIP DASH (TYP.)
6" SOLID WHITE (TYP.)

PARK CLOSES 11 PM

*CPD ("PARK CLOSES 11PM")

MATCH LINE STA 5001+50.00
SEE SHEET PMK-36

E 63rd St
6300 S

Sta 5001+51.03
D3-1

Sta 5001+51.03
D3-2

℄ E 63RD STREET

TOW ZONE

Sta 4012+03.70
R7-1-1

24" SOLID WHITE STOP LINE (TYP.)

4" DOUBLE YELLOW (4" GAP) LINE, SOLID (TYP.)

4" SOLID WHITE (TYP.)

+50.50
6.08' LT

+02.10
18.00' LT

E. 63RD STEET

4" DOUBLE YELLOW (4" GAP) LANE LINE, SOLID (TYP.)

℄ HAYES DRIVE

12" YELLOW DIAGONALS @45 DEGREES, SOLID ON 20' CENTERS (TYP.)

+44.44
2.97' LT

4" WHITE DOTTED LINE (2' LINE WITH 6' GAP) (TYP.)

+07.12
7.33' LT

6" WHITE DIAGONALS @45 DEGREES, SOLID ON 20' CENTERS (TYP.)

6" SOLID WHITE (TYP.)

MATCH LINE STA 4010+50
SEE SHEET PMK-32

4011

4012

4013

+18.68
16.00' RT

WHITE LETTERS 'ONLY' (8' HEIGHT)

WHITE LEFT TURN ARROW (8' HEIGHT)

5000+00

Obama Center
Lakefront Trail

Sta 5000+34.78
D1-2B

8016+62.46
*PARK DISTRICT

Sta 4013+01.29
*PARK DISTRICT

Sta 8016+24.97
D1-2B

+46.57
5.01' LT

HAYES DRIVE

E 63rd St
6300 S

Sta 8016+40.32
D3-2

CHOSEN FEW D.J.'S WAY

Sta 8016+40.32
D3-1

TOW ZONE

Sta 4012+17.86
R7-1-3

+43.52
29.75' RT

PARK CLOSES 11 PM

Sta 8016+53.49
*CPD ("PARK CLOSES 11PM")

E Hayes Dr
S Cornell Dr
6300 S - 1632 E

Sta 4013+01.29
D3-2
R5-2

*CPD (PARK CLOSES 11PM)

4" WHITE (6' LINE WITH 18' GAP), SKIP DASH (TYP.)

6" SOLID WHITE (TYP.)

12" YELLOW DIAGONALS @45 DEGREES, SOLID ON 20' CENTERS

4" DOUBLE YELLOW (4" GAP) LANE LINE, SOLID (TYP.)

MATCH LINE STA 8015+50.00
SEE SHEET PMK-15

℄ PR CORNELL DRIVE

LOCATION KEY

PLOT DATE: 2/15/2021
PLOT SCALE: 40.0000 ' / in.
FILE NAME: pw:\cdot-dwg-int-ctv1.cdot.local:C:\cdot\Projects\Documents\Projects\3153\CADD\Sheets\PMK\sht-pmk-c-d34.dgn

| | | | | |
|---|---|---|---|---|
| DESIGN: MG | | | | |
| DRAWN: MG | | | | |
| CHECKED: DM | | | | |
| APPROVED: | NO. | BY | DATE | DESCRIPTION |
| DATE: 01/22/2021 | REVISIONS | | | |

CDOT CHICAGO DEPARTMENT OF TRANSPORTATION

C*NECT

PAVEMENT MARKING AND SIGNING
PROPOSED CONDITIONS
E. 63RD ST./E. HAYES DR./S. CORNELL DR.

JACKSON PARK MOBILITY IMPROVEMENTS

STA. 4010+50 TO STA. 5001+50

| | | | |
|---|---|---|---|
| CONTRACT NO. | - | TOTAL SHEETS | SHEET NO. |
| PROJECT NO. | B-7-203 | 1434 | 723 |
| SCALE: 1"=20' | | DRAWING NO. | PMK-34 |

## EXISTING CONDITIONS

LEGEND (EXISTING AND PROPOSED)

- REMOVE SIGN PANEL AND SALVAGE
- REMOVE SIGN ASSEMBLY AND SALVAGE
- FURNISH AND INSTALL POLE AND BASE

20 0 20 40
SCALE IN FEET

MATCH LINE
SEE SHEET PMK-16

Sta 501+38.96
*CPD

MATCH LINE
SEE SHEET PMK-36

Sta 502+32.04
R7-1-1

MATCH LINE
SEE SHEET PMK-33

## PROPOSED CONDITIONS

℄ EX CORNELL DRIVE

MATCH LINE
SEE SHEET PMK-16

PI Sta 1+93.06

MATCH LINE
SEE SHEET PMK-36

MATCH LINE
SEE SHEET PMK-34

LOCATION KEY

| | | | | | |
|---|---|---|---|---|---|
| DESIGN: MG | | | | SREV3 | |
| DRAWN: MG | | | | SREV2 | |
| CHECKED: DM | | | | SREV1 | |
| APPROVED: | NO. | BY | DATE | DESCRIPTION | |
| DATE: 01/22/2021 | REVISIONS | | | | |

CDOT CHICAGO DEPARTMENT OF TRANSPORTATION

C*NECT

**PAVEMENT MARKING AND SIGNING**
**EXISTING & PROPOSED CONDITIONS**
**E. 63RD ST./E. HAYES DR./S. CORNELL DR.**

**JACKSON PARK MOBILITY IMPROVEMENTS**

STA. N/A TO STA. N/A

| | |
|---|---|
| CONTRACT NO. - | TOTAL SHEETS 1434 / SHEET NO. 724 |
| PROJECT NO. B-7-203 | DRAWING NO. PMK-35 |
| SCALE: 1"=20' | |

PLOT DATE: 2/15/2021
PLOT SCALE: 40.0000 ' / in.
FILE NAME: pw:\\cdot-pw-int-civiltech.bcad\Civiltech Projects\Documents\Projects\3153\CADD\Sheets\PMK\sht-pmk-c435.dgn

## EXISTING CONDITIONS

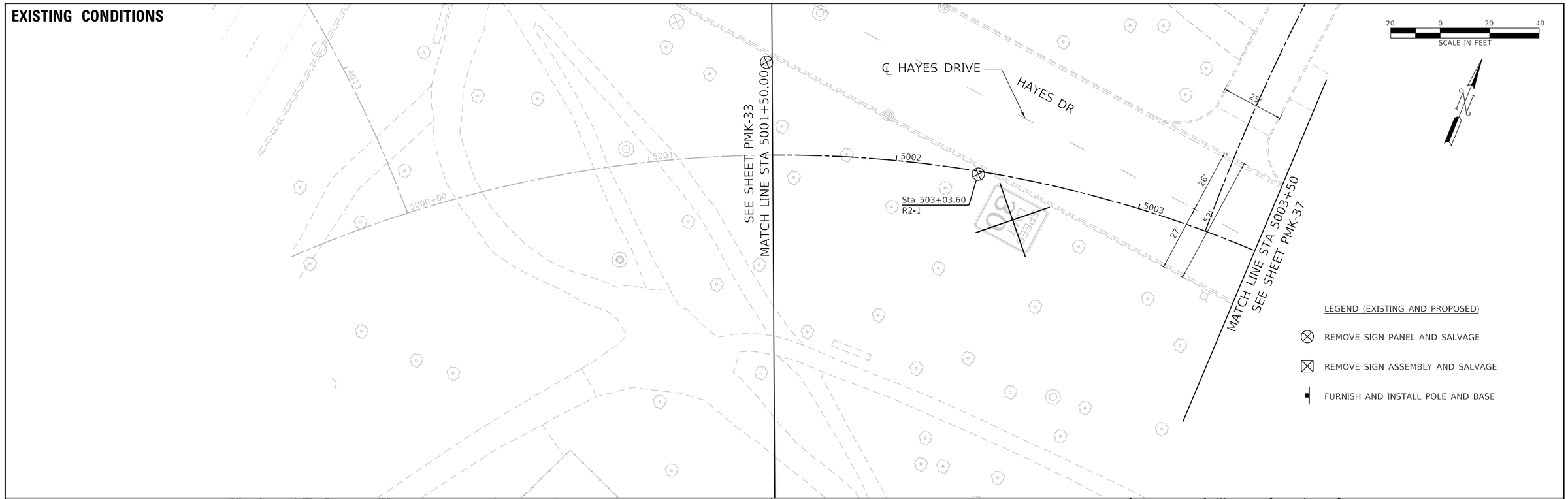


## PROPOSED CONDITIONS

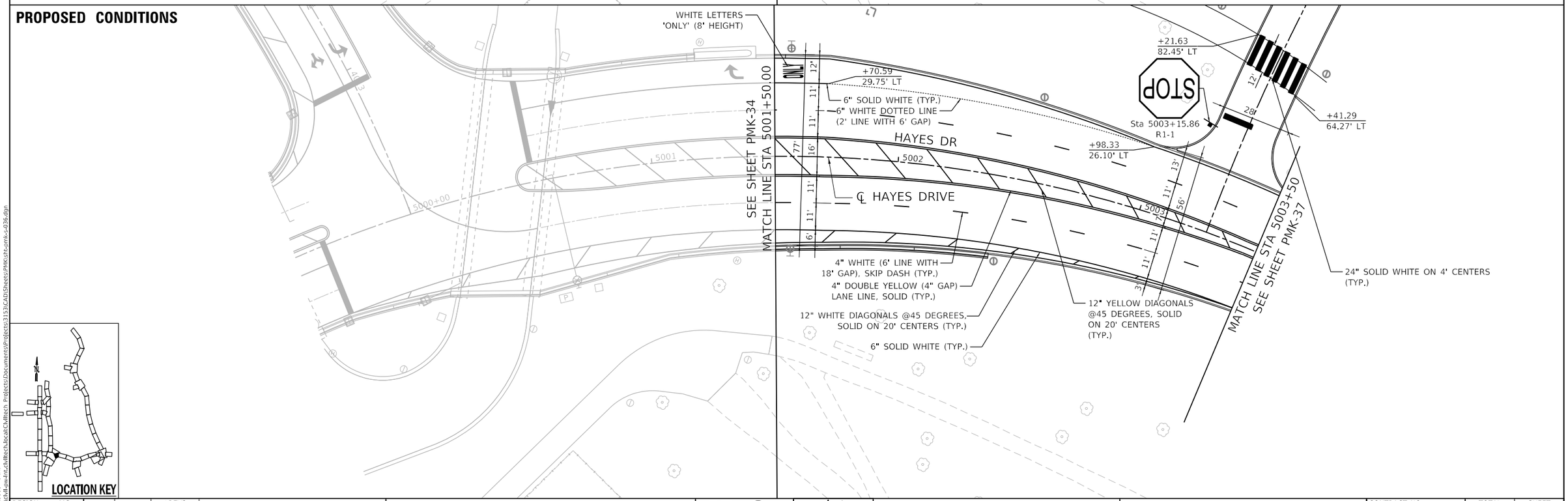





| | | | | | |
|---|---|---|---|---|---|
| DESIGN: MG | | | | SREV3 | |
| DRAWN: MG | | | | SREV2 | |
| CHECKED: DM | | | | SREV1 | |
| APPROVED: | NO. | BY | DATE | DESCRIPTION | |
| DATE: 01/22/2021 | REVISIONS | | | | |

CDOT CHICAGO DEPARTMENT OF TRANSPORTATION

C*NECT

**PAVEMENT MARKING AND SIGNING**
**EXISTING & PROPOSED CONDITIONS**
**E. HAYES DR.**

**JACKSON PARK MOBILITY IMPROVEMENTS**

STA. 5001+50 TO STA. 5003+50

| | |
|---|---|
| CONTRACT NO. | - |
| PROJECT NO. | B-7-203 |
| SCALE: | 1"=20' |

| TOTAL SHEETS | SHEET NO. |
|---|---|
| 1434 | 725 |
| DRAWING NO. | PMK-36 |

PLOT DATE: 2/15/2021
PLOT SCALE: 40.0000 ' / in.
FILE NAME: pw:\cdot-pw-int.cdot.local:\cdot.local\Projects\Documents\Projects\3153\CAD\Sheets\PMK\pmk-s-036.dgn

## EXISTING CONDITIONS

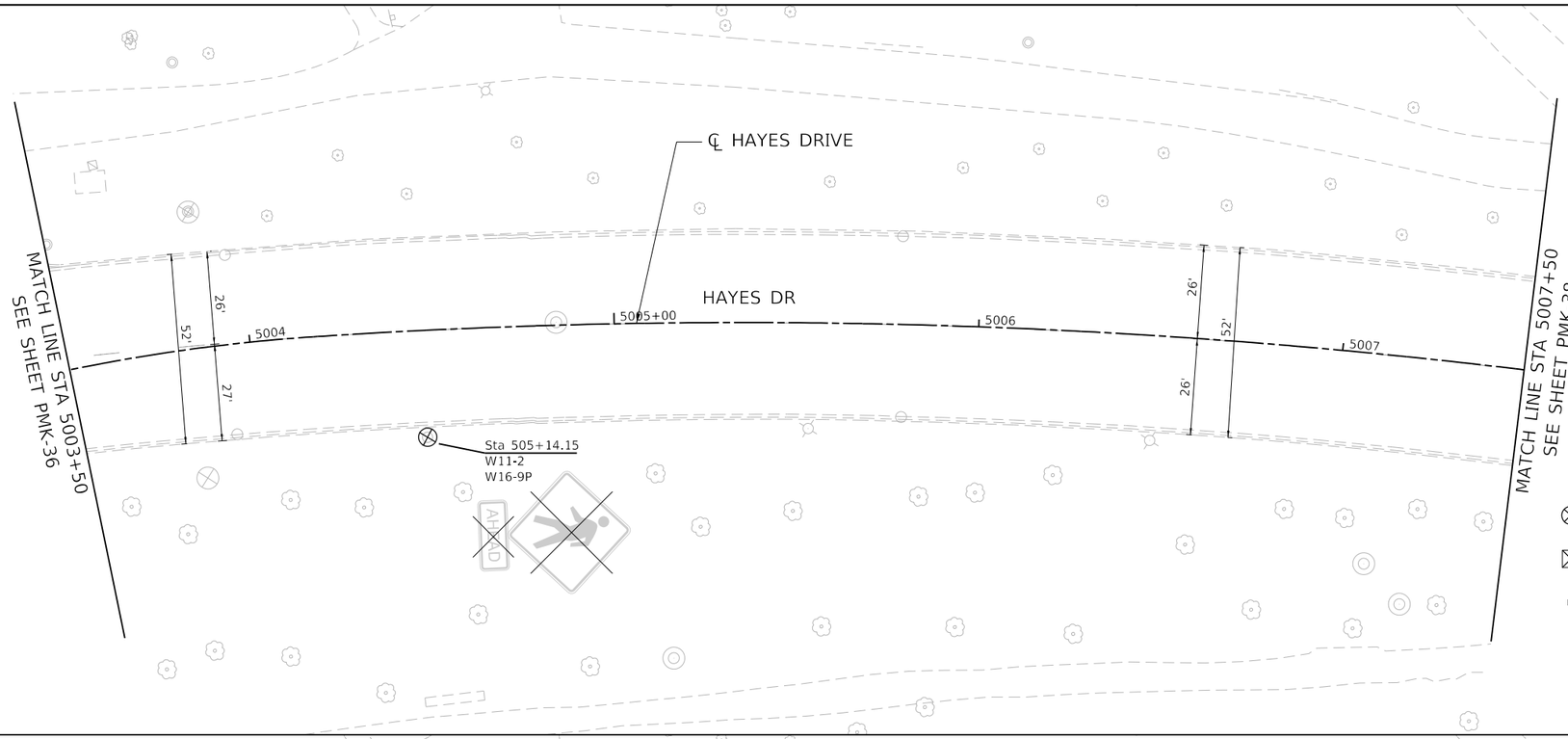


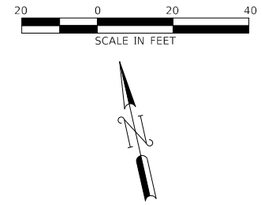


LEGEND (EXISTING AND PROPOSED)

- REMOVE SIGN PANEL AND SALVAGE
- REMOVE SIGN ASSEMBLY AND SALVAGE
- FURNISH AND INSTALL POLE AND BASE

## PROPOSED CONDITIONS

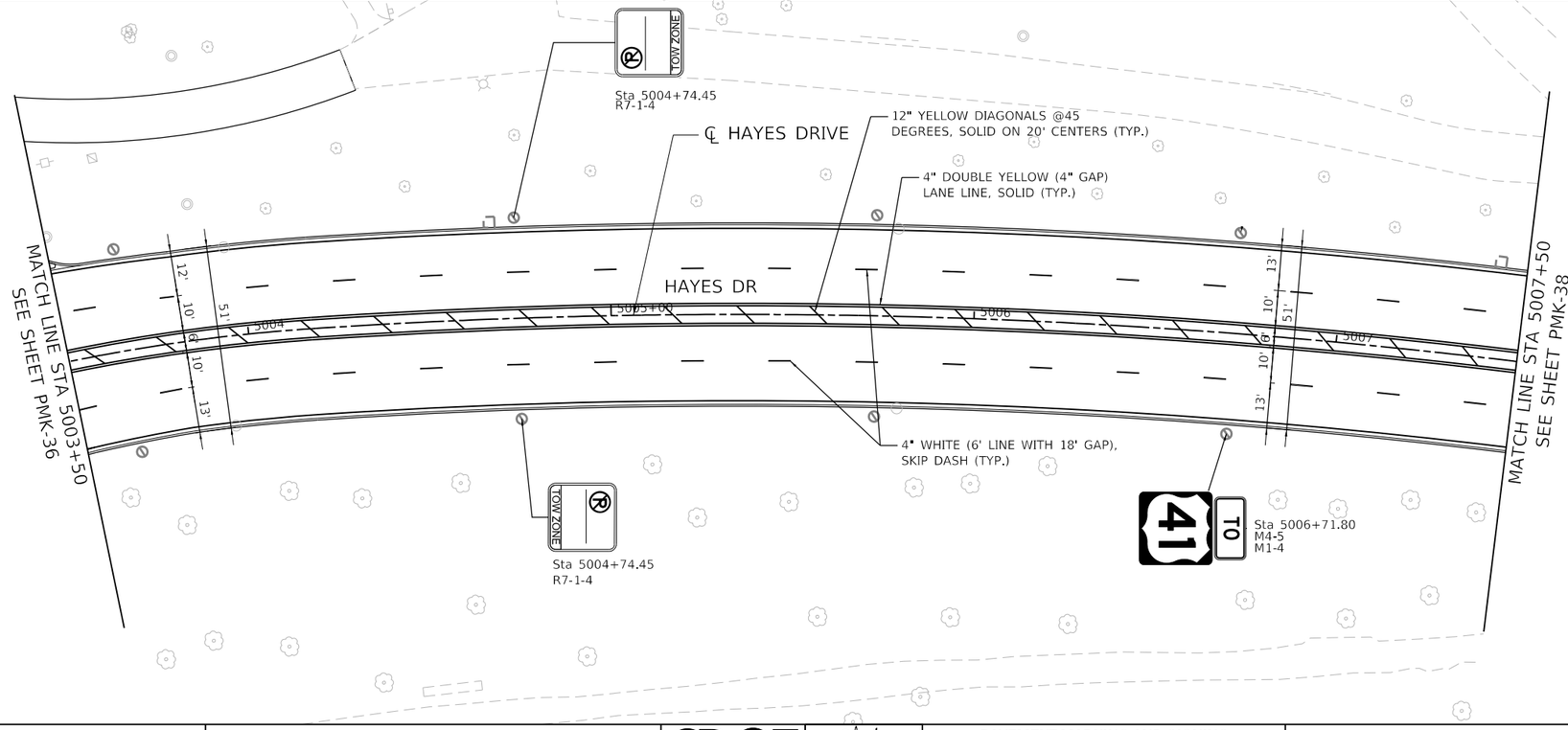


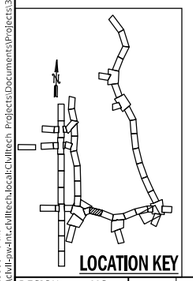


| | | | | | |
|---|---|---|---|---|---|
| DESIGN: MG | | | | $REV3 | |
| DRAWN: MG | | | | $REV2 | |
| CHECKED: DM | | | | $REV1 | |
| APPROVED: | NO. | BY | DATE | DESCRIPTION | |
| DATE: 01/22/2021 | REVISIONS | | | | |

CDOT CHICAGO DEPARTMENT OF TRANSPORTATION

C*NECT

**PAVEMENT MARKING AND SIGNING**
**EXISTING & PROPOSED CONDITIONS**
**E. HAYES DR.**

**JACKSON PARK MOBILITY IMPROVEMENTS**

STA. 5003+50 TO STA. 5007+50

| | |
|---|---|
| CONTRACT NO. - | TOTAL SHEETS 1434 |
| PROJECT NO. B-7-203 | SHEET NO. 726 |
| SCALE: 1"=20' | DRAWING NO. PMK-37 |

PLOT DATE: 2/15/2021
PLOT SCALE: 40.0000 ' / in.
FILE NAME: pw:\\cdot-pw-int-civiltech.bentleyconnect.com:CivilTech Projects\Documents\Projects\3153\CADD\Sheets\PMK\cdt-pmk-c437.dgn

## EXISTING CONDITIONS

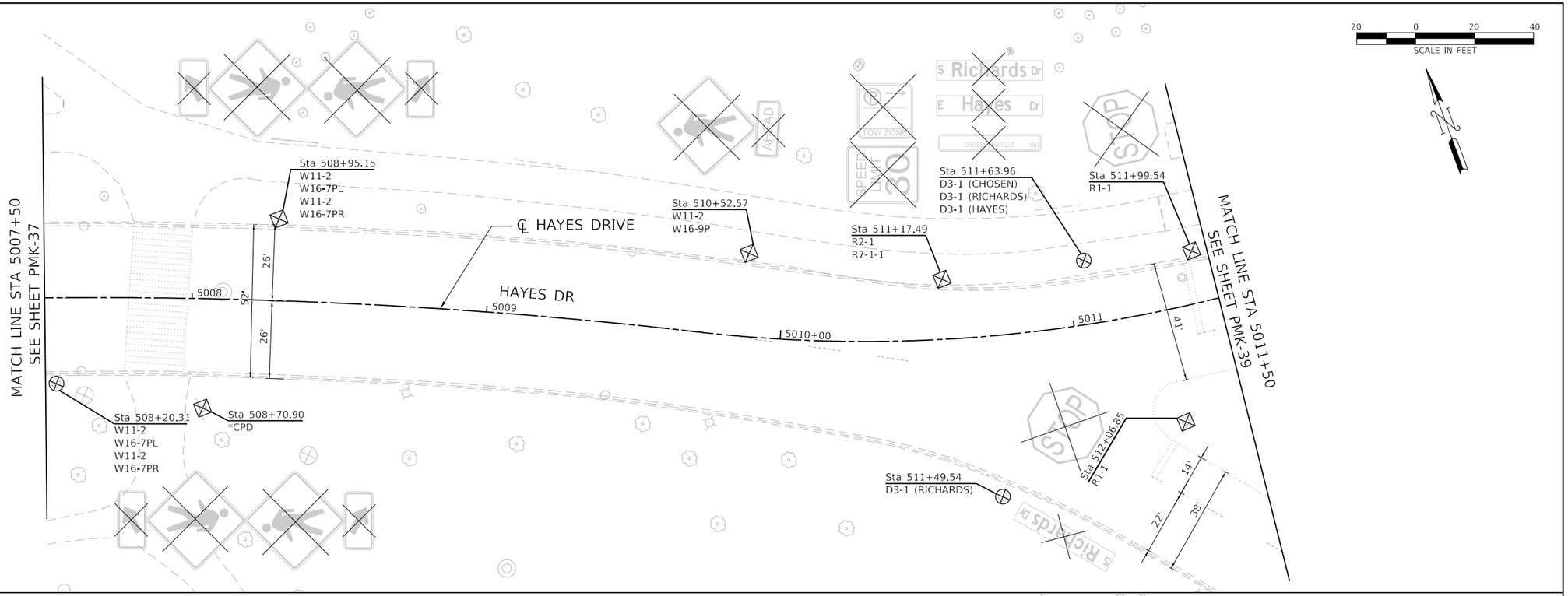


LEGEND (EXISTING AND PROPOSED)

- ⊗ REMOVE SIGN PANEL AND SALVAGE
- ⊠ REMOVE SIGN ASSEMBLY AND SALVAGE
- FURNISH AND INSTALL POLE AND BASE

## PROPOSED CONDITIONS

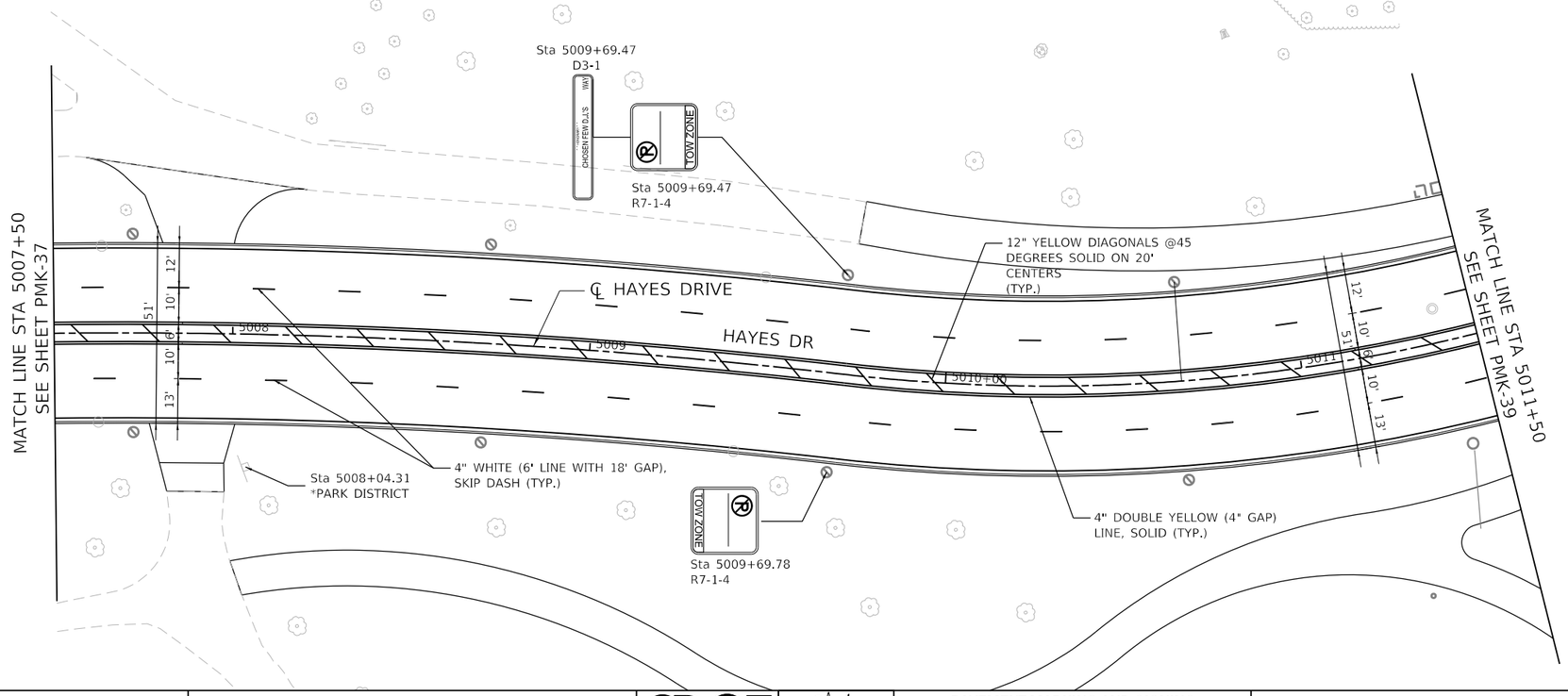


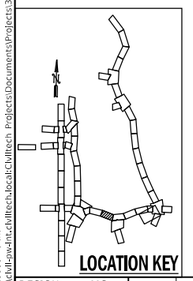


| | | | | | |
|---|---|---|---|---|---|
| DESIGN: MG | | | | SREV3 | |
| DRAWN: MG | | | | SREV2 | |
| CHECKED: DM | | | | SREV1 | |
| APPROVED: | NO. | BY | DATE | DESCRIPTION | |
| DATE: 01/22/2021 | REVISIONS | | | | |

CDOT CHICAGO DEPARTMENT OF TRANSPORTATION

C*NECT

**PAVEMENT MARKING AND SIGNING**
**EXISTING & PROPOSED CONDITIONS**
**E. HAYES DR.**

**JACKSON PARK MOBILITY IMPROVEMENTS**

STA. 5007+50 TO STA. 5011+50

| | | | |
|---|---|---|---|
| CONTRACT NO. - | | TOTAL SHEETS | SHEET NO. |
| PROJECT NO. B-7-203 | | 1434 | 727 |
| SCALE: 1"=20' | | DRAWING NO. PMK-38 | |

PLOT DATE: 2/15/2021
PLOT SCALE: 40.0000 ' / in.
FILE NAME: pw:\\cdot-pw-int-civiltech.bentley.com:CivilTech Projects\Documents\Projects\3153\CAD\Sheets\PMK\cdt-pmk-c-038.dgn

## EXISTING CONDITIONS

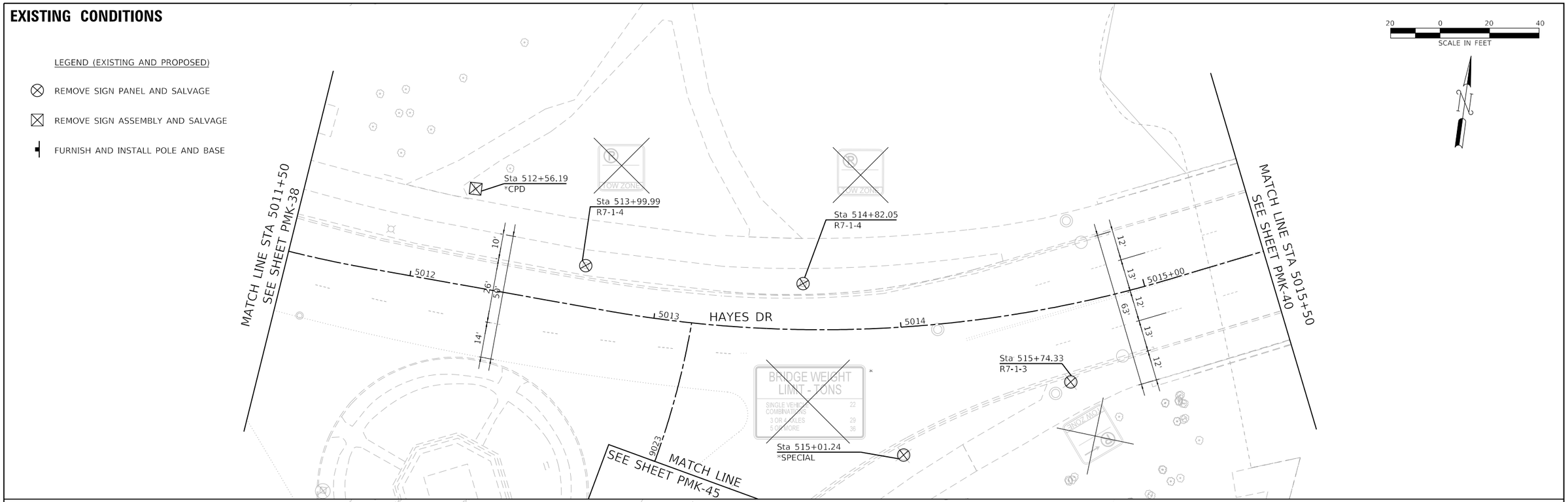


## PROPOSED CONDITIONS

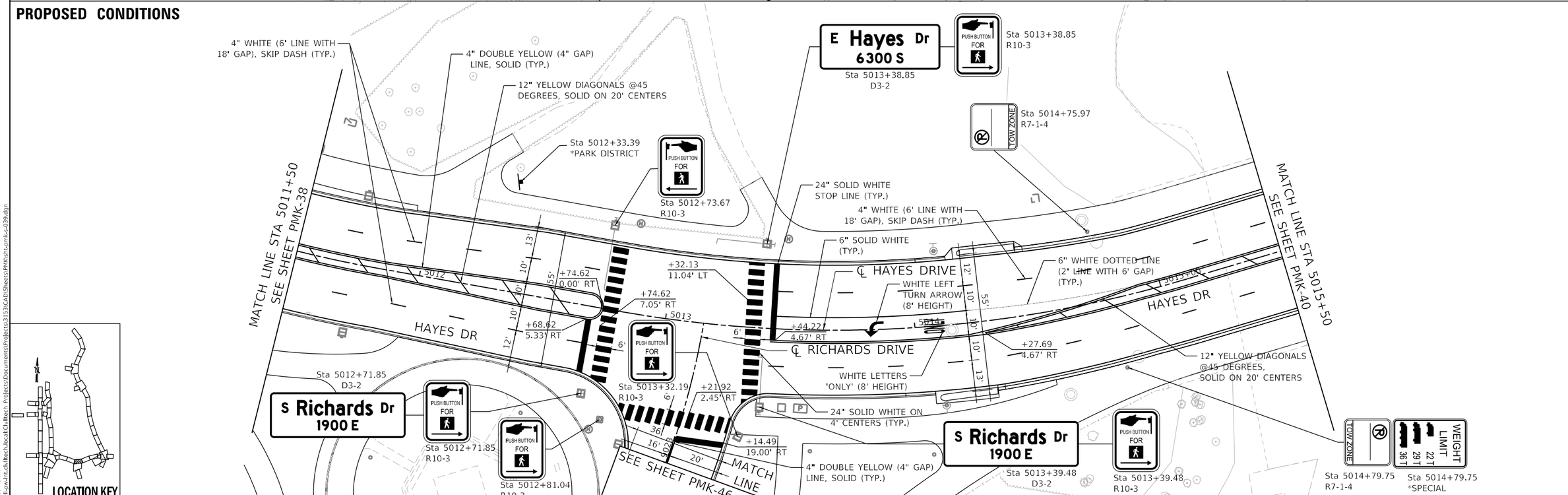


| | | | | | |
|---|---|---|---|---|---|
| DESIGN: | MG | | | SREV3 | |
| DRAWN: | MG | | | SREV2 | |
| CHECKED: | DM | | | SREV1 | |
| APPROVED: | | NO. | BY | DATE | DESCRIPTION |
| DATE: 01/22/2021 | | REVISIONS | | | |

CDOT CHICAGO DEPARTMENT OF TRANSPORTATION

C*NECT

PAVEMENT MARKING AND SIGNING
EXISTING & PROPOSED CONDITIONS
E. HAYES DR.

JACKSON PARK MOBILITY IMPROVEMENTS

STA. 5011+50 TO STA. 5015+50

| | | | |
|---|---|---|---|
| CONTRACT NO. - | TOTAL SHEETS 1434 | SHEET NO. 728 | |
| PROJECT NO. B-7-203 | DRAWING NO. PMK-39 | | |
| SCALE: 1"=20' | | | |

PLOT DATE: 2/15/2021
PLOT SCALE: 40.0000 ' / in.
FILE NAME: pw:\\cdot-pw-int.civiltech.local:Civiltech Projects\Documents\Projects\3153\CAD\Sheets\PMK\sht-pmk-s-039.dgn

## EXISTING CONDITIONS

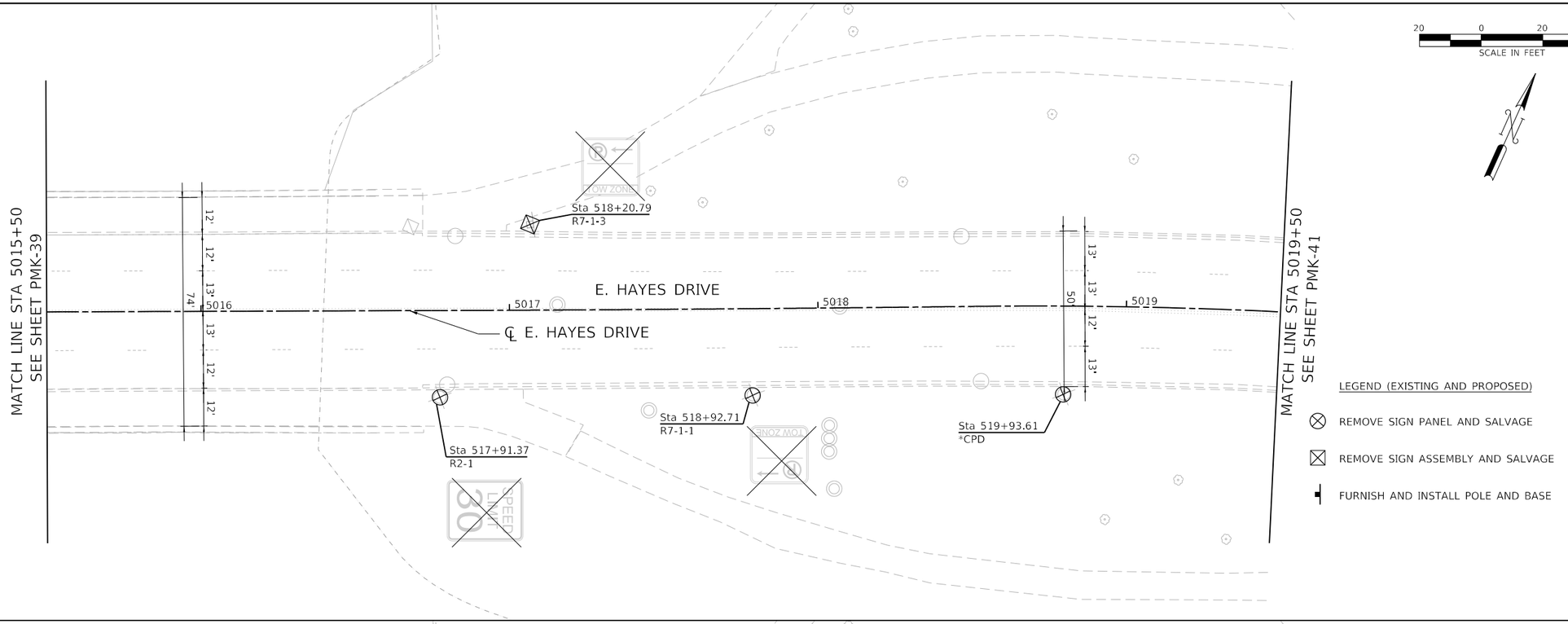


## PROPOSED CONDITIONS

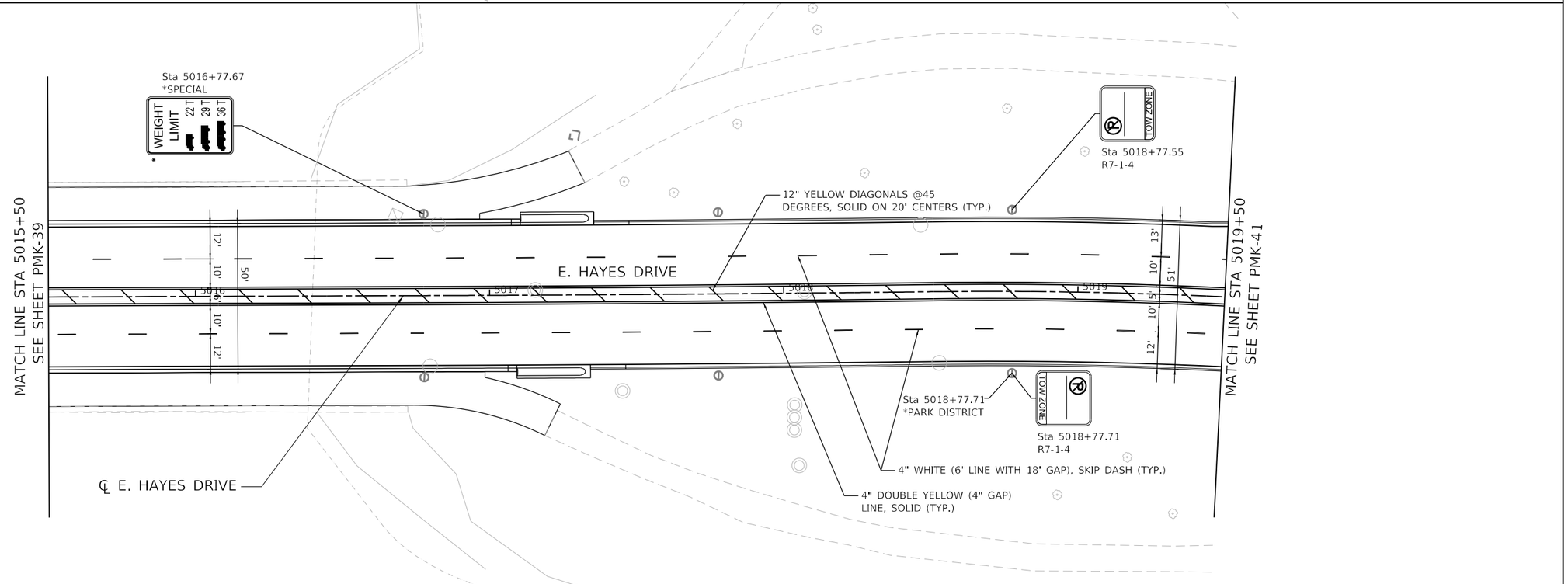


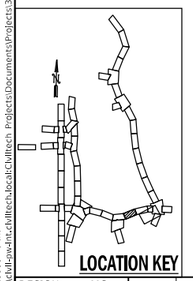


PLOT DATE: 2/15/2021
PLOT SCALE: 40.0000 ' / in.
FILE NAME: pw:\\civil-pw-int.civiltech.local:Civiltech Projects\Documents\Projects\3153\CAD\Sheets\PMK\sht-pmk-s-040.dgn

| | | | | | |
|---|---|---|---|---|---|
| DESIGN: | MG | | | SREV3 | |
| DRAWN: | MG | | | SREV2 | |
| CHECKED: | DM | | | SREV1 | |
| APPROVED: | | NO. | BY | DATE | DESCRIPTION |
| DATE: 01/22/2021 | | REVISIONS | | | |

CDOT CHICAGO DEPARTMENT OF TRANSPORTATION

C*NECT

PAVEMENT MARKING AND SIGNING
EXISTING & PROPOSED CONDITIONS
E. HAYES DR.

JACKSON PARK MOBILITY IMPROVEMENTS

STA. 5015+50 TO STA. 5019+50

| | | | |
|---|---|---|---|
| CONTRACT NO. - | TOTAL SHEETS 1434 | SHEET NO. 729 | |
| PROJECT NO. B-7-203 | DRAWING NO. PMK-40 | | |
| SCALE: 1"=20' | | | |

## EXISTING CONDITIONS

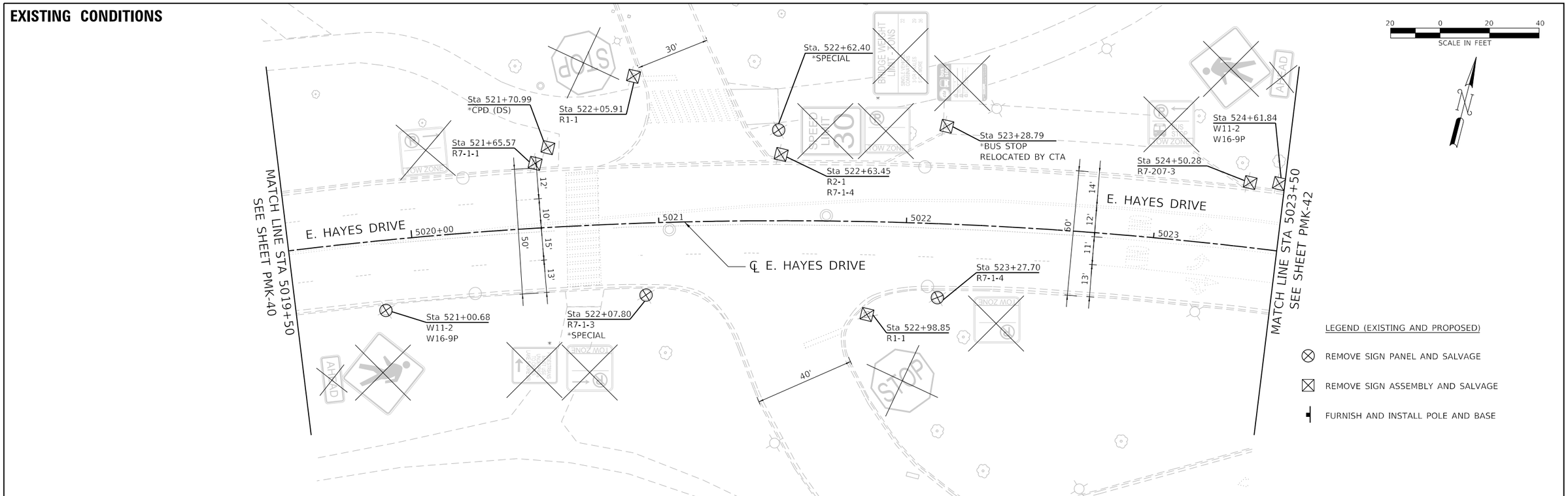


## PROPOSED CONDITIONS

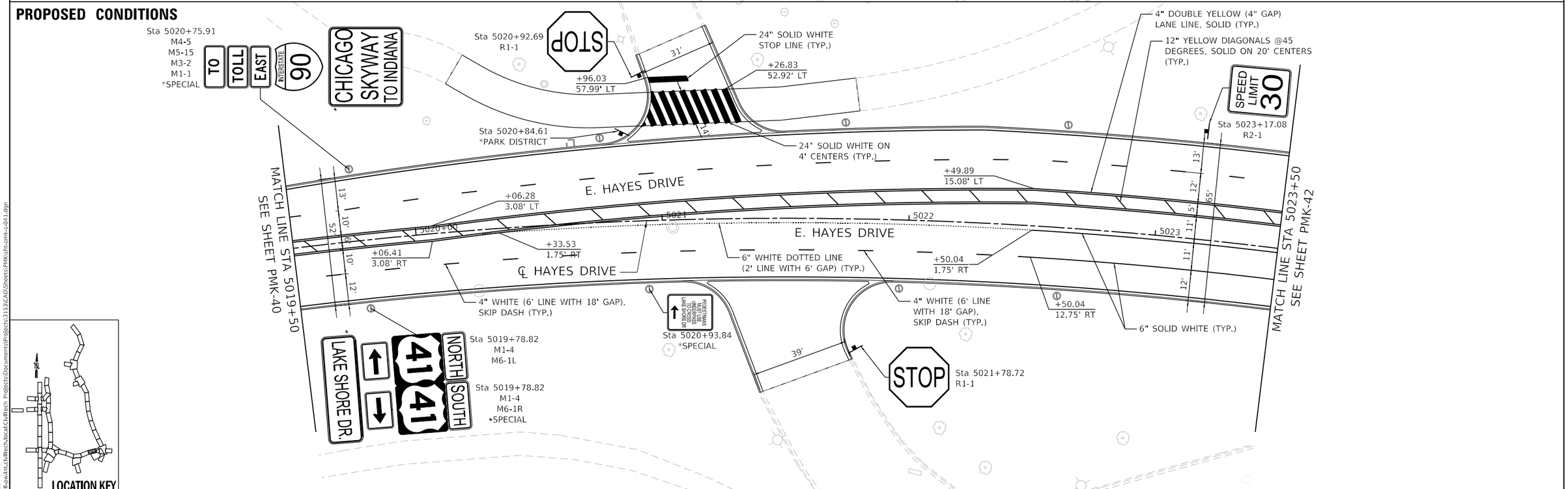




LOCATION KEY

| | | | | | |
|---|---|---|---|---|---|
| DESIGN: | MG | | | $REV3 | |
| DRAWN: | MG | | | $REV2 | |
| CHECKED: | DM | | | $REV1 | |
| APPROVED: | | NO. | BY | DATE | DESCRIPTION |
| DATE: 01/22/2021 | | | | REVISIONS | |

CDOT CHICAGO DEPARTMENT OF TRANSPORTATION

C*NECT

PAVEMENT MARKING AND SIGNING
EXISTING & PROPOSED CONDITIONS
E. HAYES DR.

JACKSON PARK MOBILITY IMPROVEMENTS

STA. 5019+50 TO STA. 5023+50

| | | | |
|---|---|---|---|
| CONTRACT NO. - | TOTAL SHEETS | SHEET NO. |
| PROJECT NO. B-7-203 | 1434 | 730 |
| SCALE: 1"=20' | DRAWING NO. PMK-41 | |

PLOT DATE: 2/15/2021
PLOT SCALE: 40.0000 ' / in.
FILE NAME: pw:\\civil-pw-int.civiltech.local:Civiltech Projects\Documents\Projects\3153\CAD\Sheets\PMK\sht-pmk-s-041.dgn

## EXISTING CONDITIONS

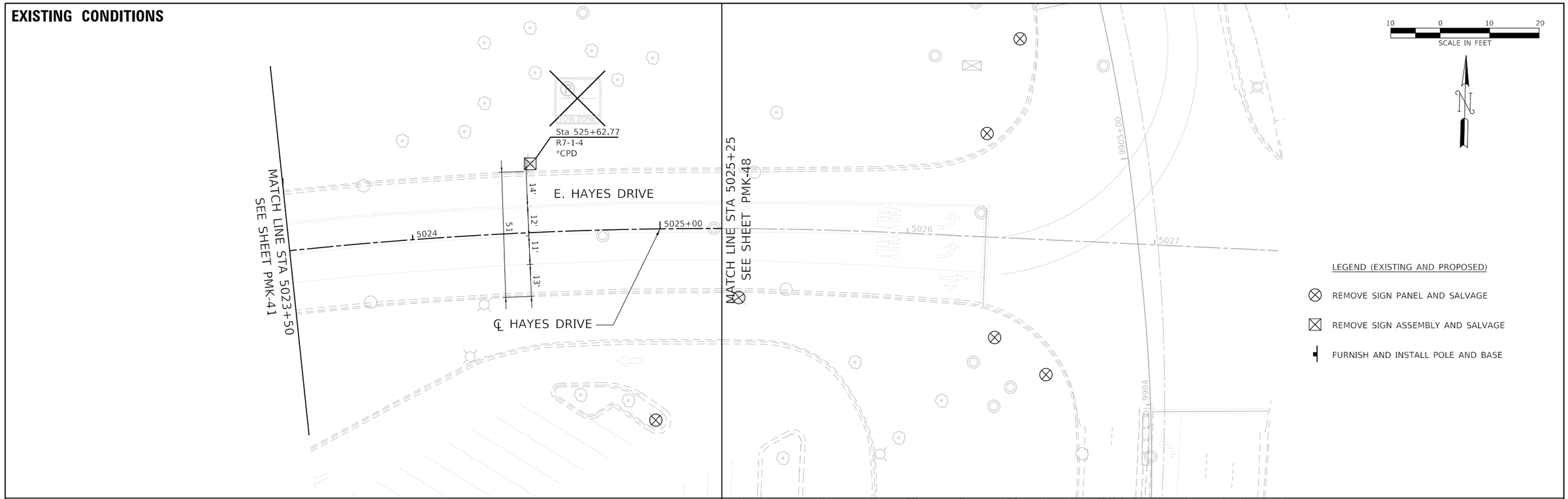


## PROPOSED CONDITIONS

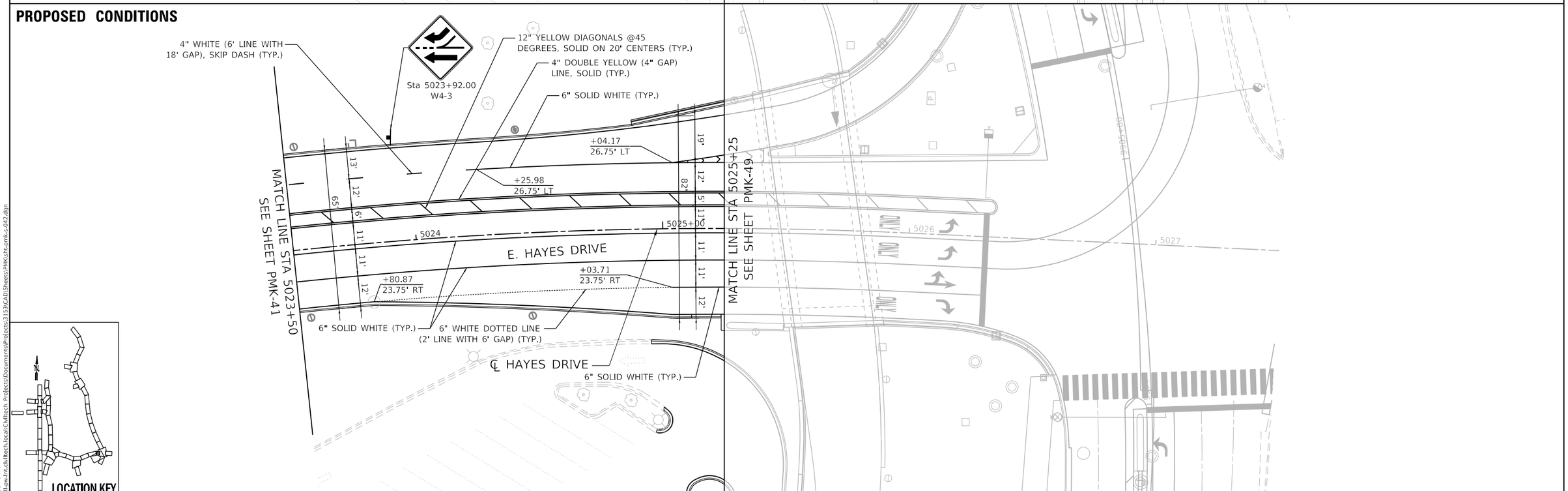





LOCATION KEY

| | | | | | |
|---|---|---|---|---|---|
| DESIGN: | MG | | | $REV3 | |
| DRAWN: | MG | | | $REV2 | |
| CHECKED: | DM | | | $REV1 | |
| APPROVED: | | NO. | BY | DATE | DESCRIPTION |
| DATE: 01/22/2021 | | | | REVISIONS | |

CDOT CHICAGO DEPARTMENT OF TRANSPORTATION

C*NECT

PAVEMENT MARKING AND SIGNING
EXISTING & PROPOSED CONDITIONS
E. HAYES DR.

JACKSON PARK MOBILITY IMPROVEMENTS

STA. 5023+50 TO STA. 5025+25

| | | |
|---|---|---|
| CONTRACT NO. - | TOTAL SHEETS 1434 | SHEET NO. 731 |
| PROJECT NO. B-7-203 | DRAWING NO. PMK-42 | |
| SCALE: 1"=20' | | |

PLOT DATE: 2/15/2021
PLOT SCALE: 40.0000 ' / in.
FILE NAME: pw:\\cdot-pw-int.civiltech.local:Civiltech Projects\Documents\Projects\3153\CAD\Sheets\PMK\sht-pmk-s-042.dgn

## EXISTING CONDITIONS

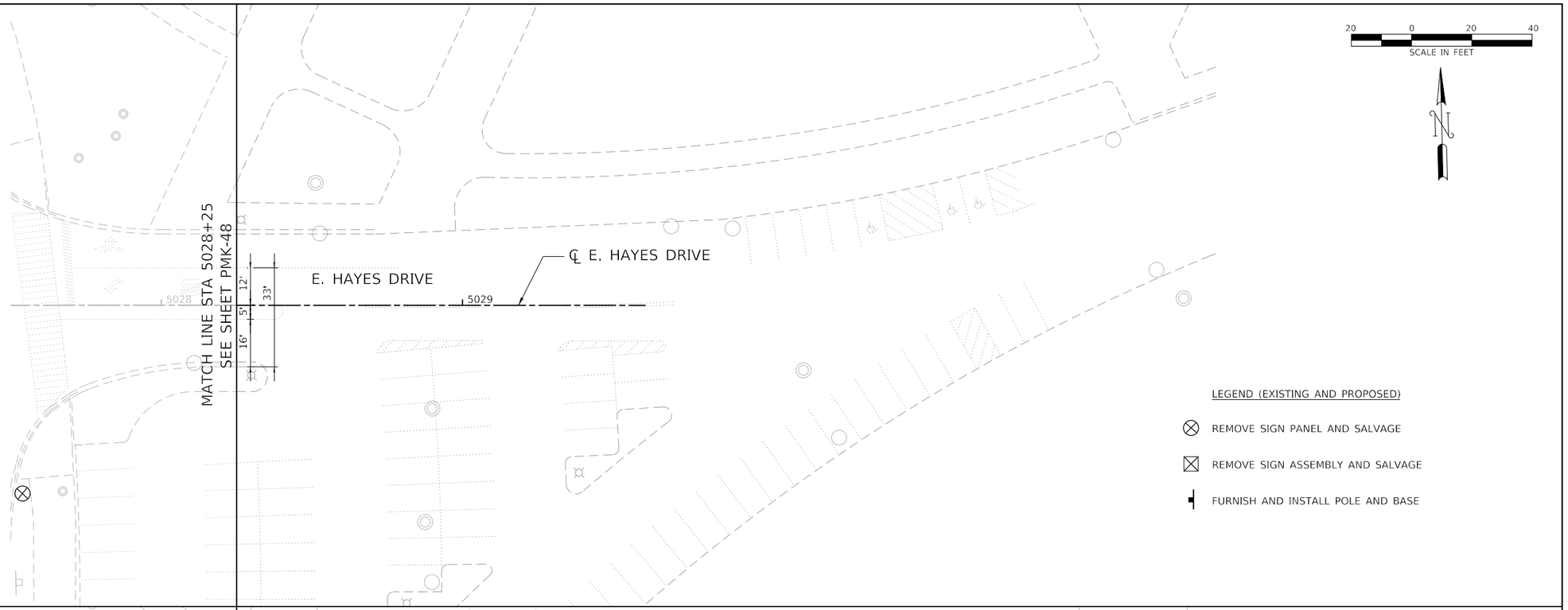


## PROPOSED CONDITIONS

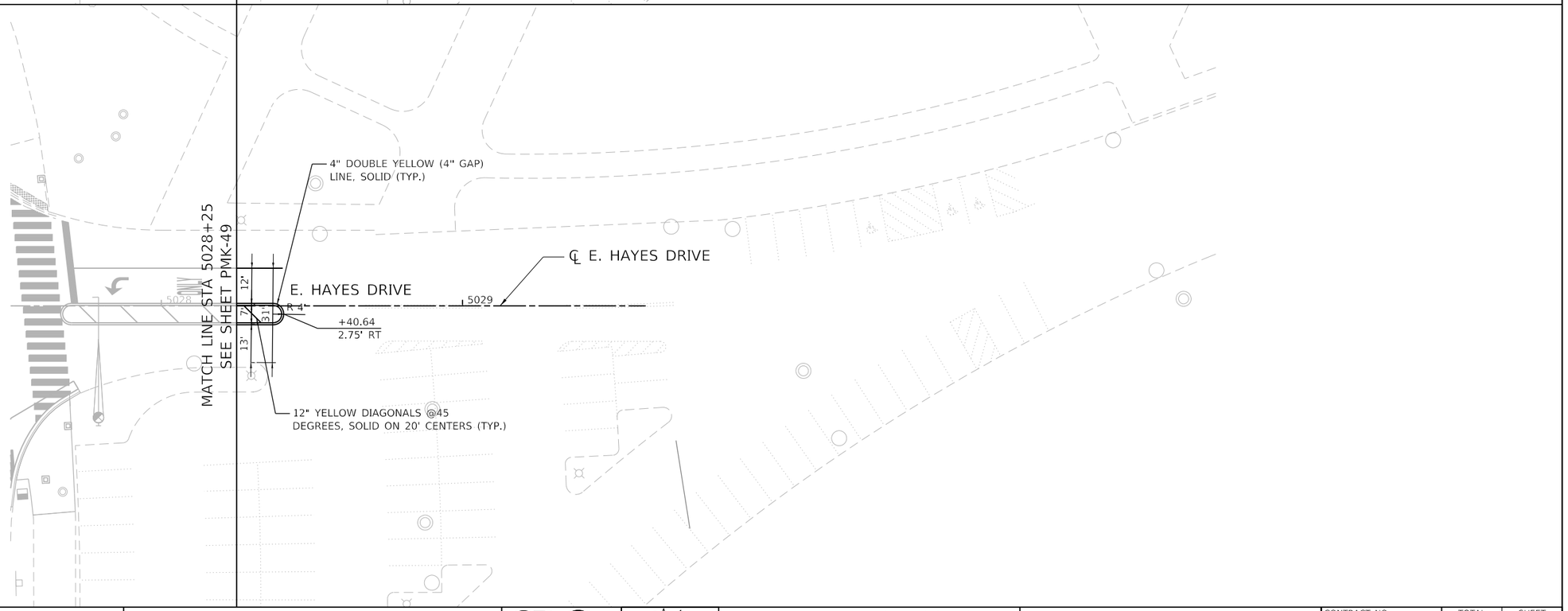


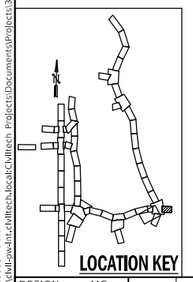


PLOT DATE: 2/15/2021
PLOT SCALE: 40.0000 ' / in.
FILE NAME: pw:\\cdot-pw-int-civiltech.bcad\Civiltech Projects\Documents\Projects\3153\CADD\Sheets\PMK\ath-pmk-c-043.dgn

| | | | | | |
|---|---|---|---|---|---|
| DESIGN: MG | | | | ≤REV3 | |
| DRAWN: MG | | | | ≤REV2 | |
| CHECKED: DM | | | | ≤REV1 | |
| APPROVED: | NO. | BY | DATE | DESCRIPTION | |
| DATE: 01/22/2021 | REVISIONS | | | | |

CDOT CHICAGO DEPARTMENT OF TRANSPORTATION

C*NECT

**PAVEMENT MARKING AND SIGNING**
**EXISTING & PROPOSED CONDITIONS**
**E. HAYES DR.**

**JACKSON PARK MOBILITY IMPROVEMENTS**

STA. 5028+00 TO STA. 5029+50

| | |
|---|---|
| CONTRACT NO. | - |
| PROJECT NO. | B-7-203 |
| SCALE: | 1"=20' |
| TOTAL SHEETS | 1434 |
| SHEET NO. | 732 |
| DRAWING NO. | PMK-43 |

## EXISTING CONDITIONS

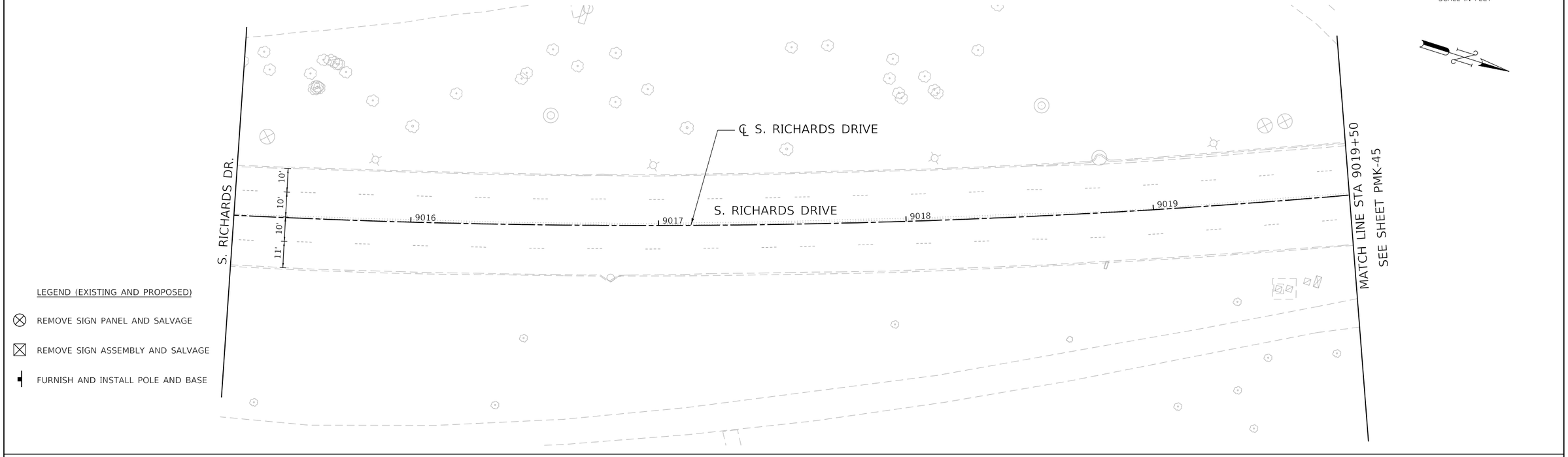


## PROPOSED CONDITIONS

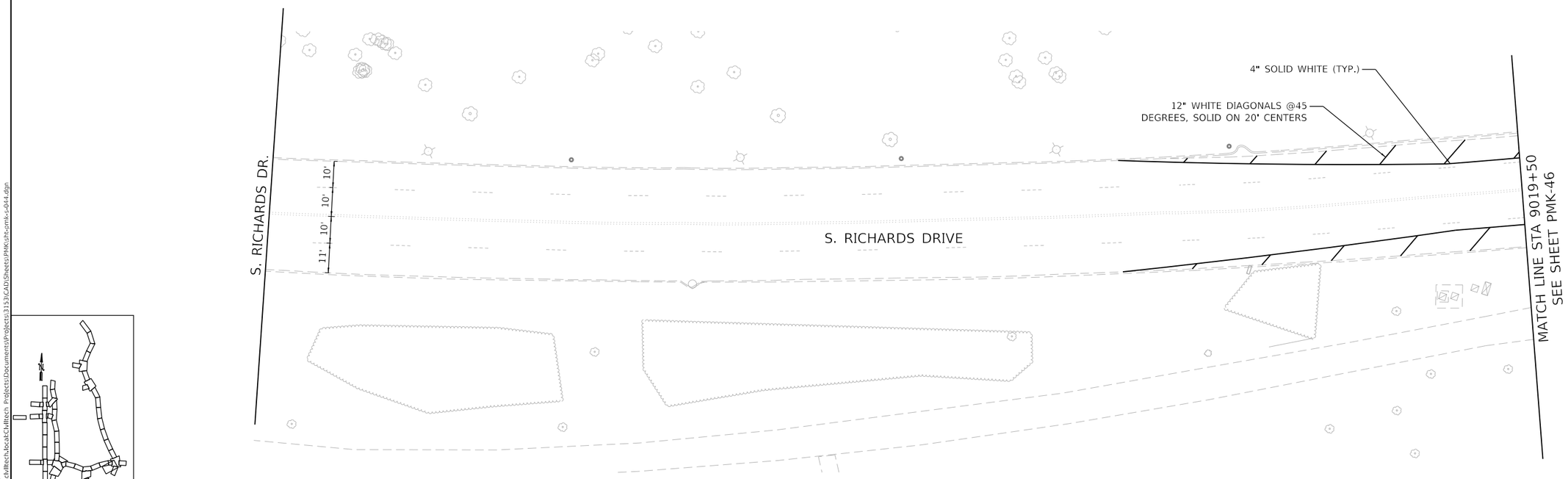





| | | | | | |
|---|---|---|---|---|---|
| DESIGN: MG | | | | ŞREV3 | |
| DRAWN: MG | | | | ŞREV2 | |
| CHECKED: DM | | | | ŞREV1 | |
| APPROVED: | NO. | BY | DATE | DESCRIPTION | |
| DATE: 01/22/2021 | REVISIONS | | | | |

CDOT CHICAGO DEPARTMENT OF TRANSPORTATION

C*NECT

**PAVEMENT MARKING AND SIGNING**
**EXISTING & PROPOSED CONDITIONS**
**S. RICHARDS DR.**

**JACKSON PARK MOBILITY IMPROVEMENTS**

STA. 9015+28 TO STA. 9019+50

| | |
|---|---|
| CONTRACT NO. - | TOTAL SHEETS 1434 |
| PROJECT NO. B-7-203 | SHEET NO. 733 |
| SCALE: 1"=20' | DRAWING NO. PMK-44 |

PLOT DATE: 2/15/2021
PLOT SCALE: 40.0000 ' / in.
FILE NAME: pw:\\cdot-pw-int-civiltech.local\Civiltech Projects\Documents\Projects\3153\CADD\Sheets\PMK\cdt-pmk-c-044.dgn

# EXISTING CONDITIONS

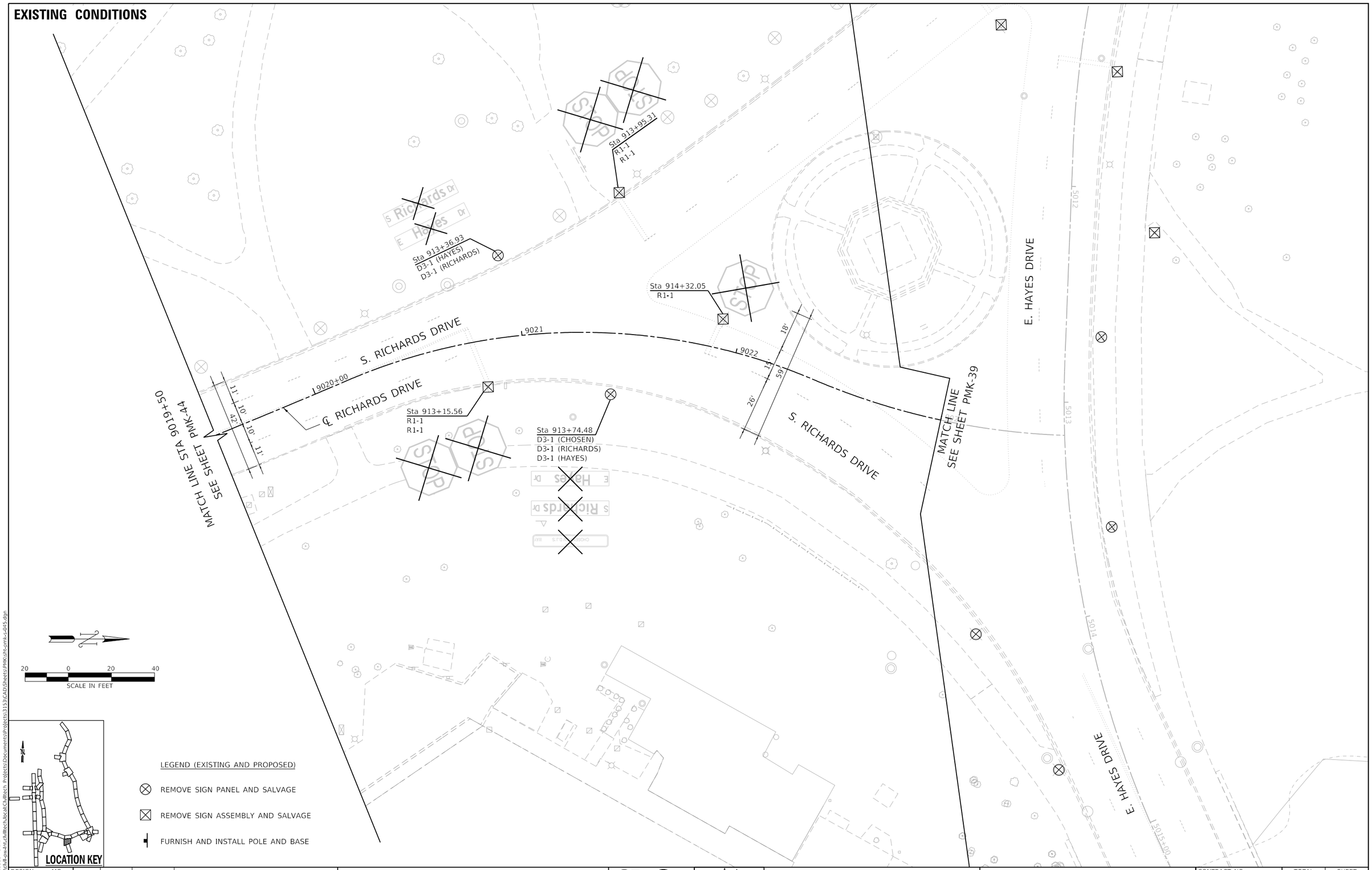


LEGEND (EXISTING AND PROPOSED)

- REMOVE SIGN PANEL AND SALVAGE
- REMOVE SIGN ASSEMBLY AND SALVAGE
- FURNISH AND INSTALL POLE AND BASE

PLOT DATE: 2/15/2021
PLOT SCALE: 40.0000 ' / in.
FILE NAME: pw:\\civil-pw-int.civiltech.local:Civiltech Projects\Documents\Projects\3153\CAD\Sheets\PMK\sht-pmk-s-045.dgn

| | | | | | |
|---|---|---|---|---|---|
| DESIGN: | MG | | | | |
| DRAWN: | MG | | | | |
| CHECKED: | DM | | | | |
| APPROVED: | | NO. | BY | DATE | DESCRIPTION |
| DATE: 01/22/2021 | | REVISIONS | | | |

CDOT CHICAGO DEPARTMENT OF TRANSPORTATION

C*NECT

PAVEMENT MARKING AND SIGNING
EXISTING CONDITIONS
S. RICHARDS DR.

JACKSON PARK MOBILITY IMPROVEMENTS

STA. 9019+50 TO STA. 9023+58

| | | | |
|---|---|---|---|
| CONTRACT NO. - | TOTAL SHEETS | SHEET NO. | |
| PROJECT NO. B-7-203 | 1434 | 734 | |
| SCALE: 1"=20' | DRAWING NO. PMK-45 | | |

**PROPOSED CONDITIONS**

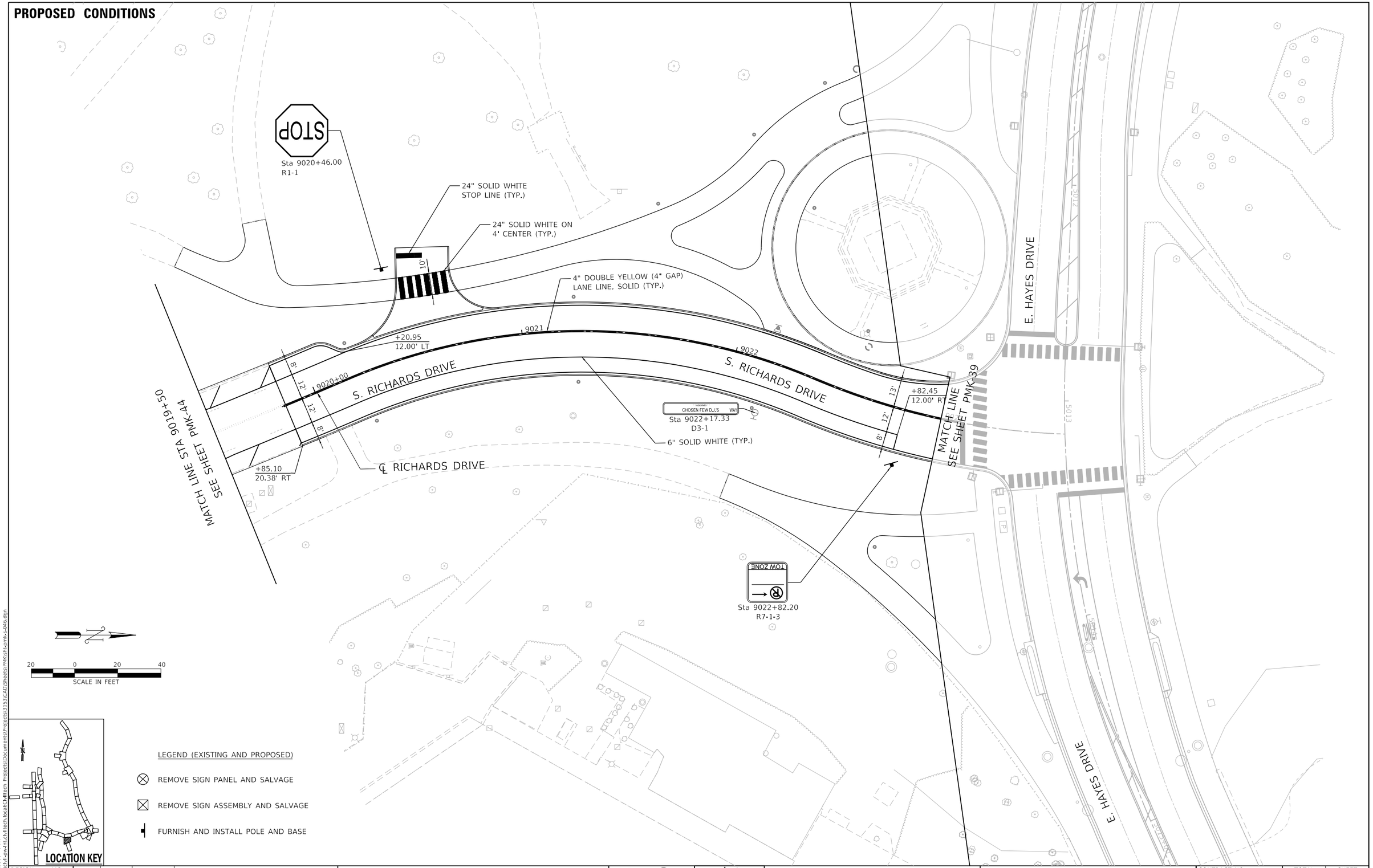


LEGEND (EXISTING AND PROPOSED)

- REMOVE SIGN PANEL AND SALVAGE
- REMOVE SIGN ASSEMBLY AND SALVAGE
- FURNISH AND INSTALL POLE AND BASE

PLOT DATE: 2/15/2021
PLOT SCALE: 40.0000 ' / in.
FILE NAME: pw:\\civil-pw-int.civiltech.local:Civiltech Projects\Documents\Projects\3153\CAD\Sheets\PMK\sht-pmk-s-046.dgn

| | | | | | |
|---|---|---|---|---|---|
| DESIGN: | MG | | | | |
| DRAWN: | MG | | | | |
| CHECKED: | DM | | | | |
| APPROVED: | | NO. | BY | DATE | DESCRIPTION |
| DATE: 01/22/2021 | | REVISIONS | | | |

CDOT CHICAGO DEPARTMENT OF TRANSPORTATION

C*NECT

PAVEMENT MARKING AND SIGNING
PROPOSED CONDITIONS
S. RICHARDS DR.

JACKSON PARK MOBILITY IMPROVEMENTS

STA. 9019+50 TO STA. 9023+58

| | | |
|---|---|---|
| CONTRACT NO. - | TOTAL SHEETS 1434 | SHEET NO. 735 |
| PROJECT NO. B-7-203 | DRAWING NO. PMK-46 | |
| SCALE: 1"=20' | | |

## EXISTING CONDITIONS

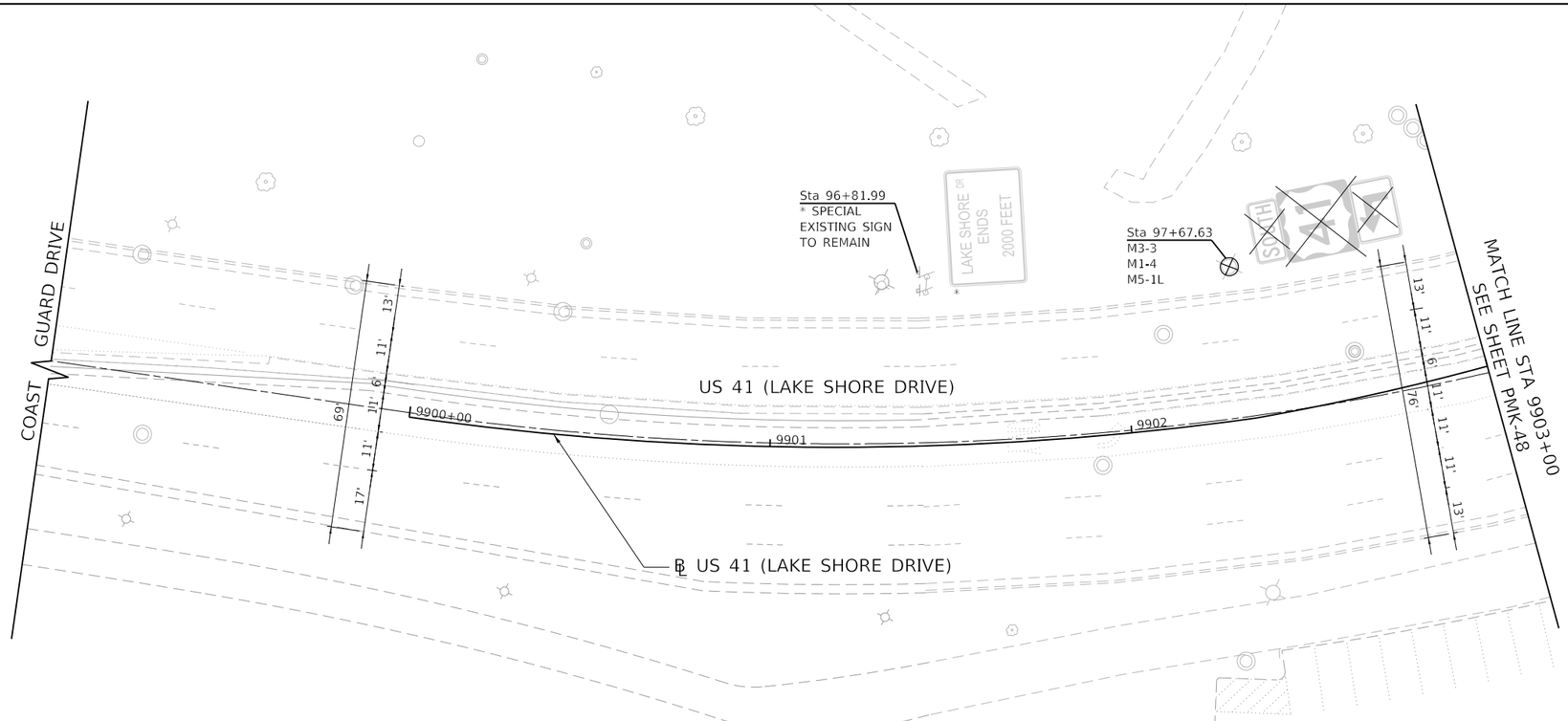


## PROPOSED CONDITIONS

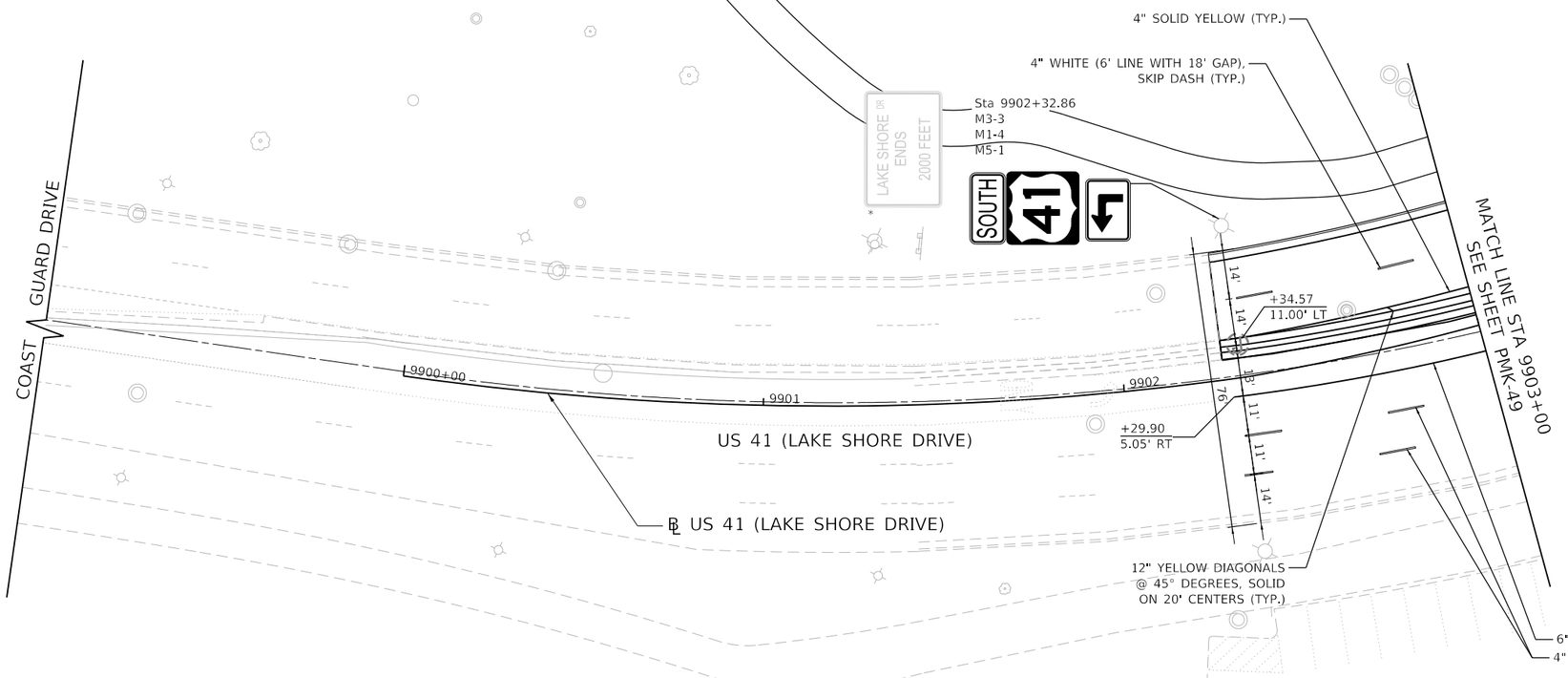


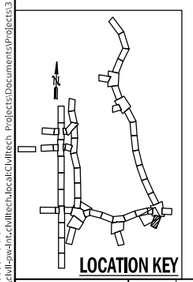


| | | | | |
|---|---|---|---|---|
| DESIGN: MG | | | $REV3 | |
| DRAWN: MG | | | $REV2 | |
| CHECKED: DM | | | $REV1 | |
| APPROVED: | NO. | BY | DATE | DESCRIPTION |
| DATE: 01/22/2021 | REVISIONS | | | |

CDOT CHICAGO DEPARTMENT OF TRANSPORTATION

C*NECT

**PAVEMENT MARKING AND SIGNING**
**EXISTING & PROPOSED CONDITIONS**
**S. LAKE SHORE DR.**

**JACKSON PARK MOBILITY IMPROVEMENTS**

STA. 9900+00 TO STA. 9903+00

| | |
|---|---|
| CONTRACT NO. | - |
| PROJECT NO. | B-7-203 |
| SCALE: | 1"=20' |

| TOTAL SHEETS | SHEET NO. |
|---|---|
| 1434 | 736 |

DRAWING NO. **PMK-47**

PLOT DATE: 2/15/2021
PLOT SCALE: 40.0000 ' / in.
FILE NAME: pw:\\cdot-sqwdnt-cfs01.bcad.cdot.tech:bcad_CDOTtech Projects\Documents\Projects\3153\CAD\Sheets\PMK\sht-pmk-s-047.dgn

# EXISTING CONDITIONS

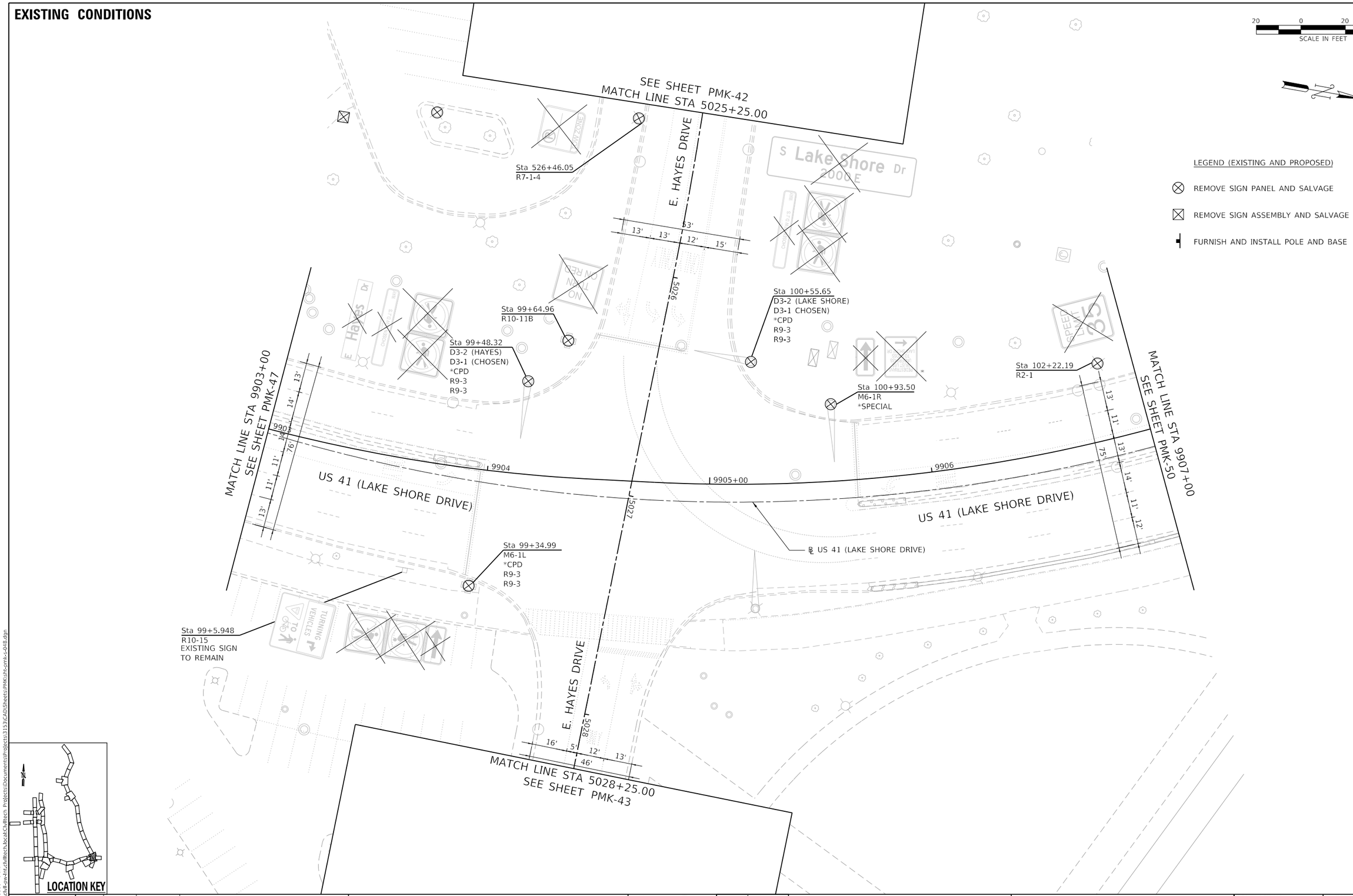


| | | | | |
|---|---|---|---|---|
| DESIGN: MG | | | | |
| DRAWN: MG | | | | |
| CHECKED: DM | | | | |
| APPROVED: | NO. | BY | DATE | DESCRIPTION |
| DATE: 01/22/2021 | REVISIONS | | | |

CDOT CHICAGO DEPARTMENT OF TRANSPORTATION

C*NECT

PAVEMENT MARKING AND SIGNING
EXISTING CONDITIONS
S. LAKE SHORE DR.

JACKSON PARK MOBILITY IMPROVEMENTS

STA. 9903+00 TO STA. 9907+00

| | | |
|---|---|---|
| CONTRACT NO. - | TOTAL SHEETS 1434 | SHEET NO. 737 |
| PROJECT NO. B-7-203 | DRAWING NO. PMK-48 | |
| SCALE: 1"=20' | | |

PLOT DATE: 2/15/2021
PLOT SCALE: 40.0000 ' / in.
FILE NAME: pw:\\civil-pw-int.civiltech.local:Civiltech Projects\Documents\Projects\3153\CAD\Sheets\PMK\sht-pmk-s-048.dgn

## PROPOSED CONDITIONS

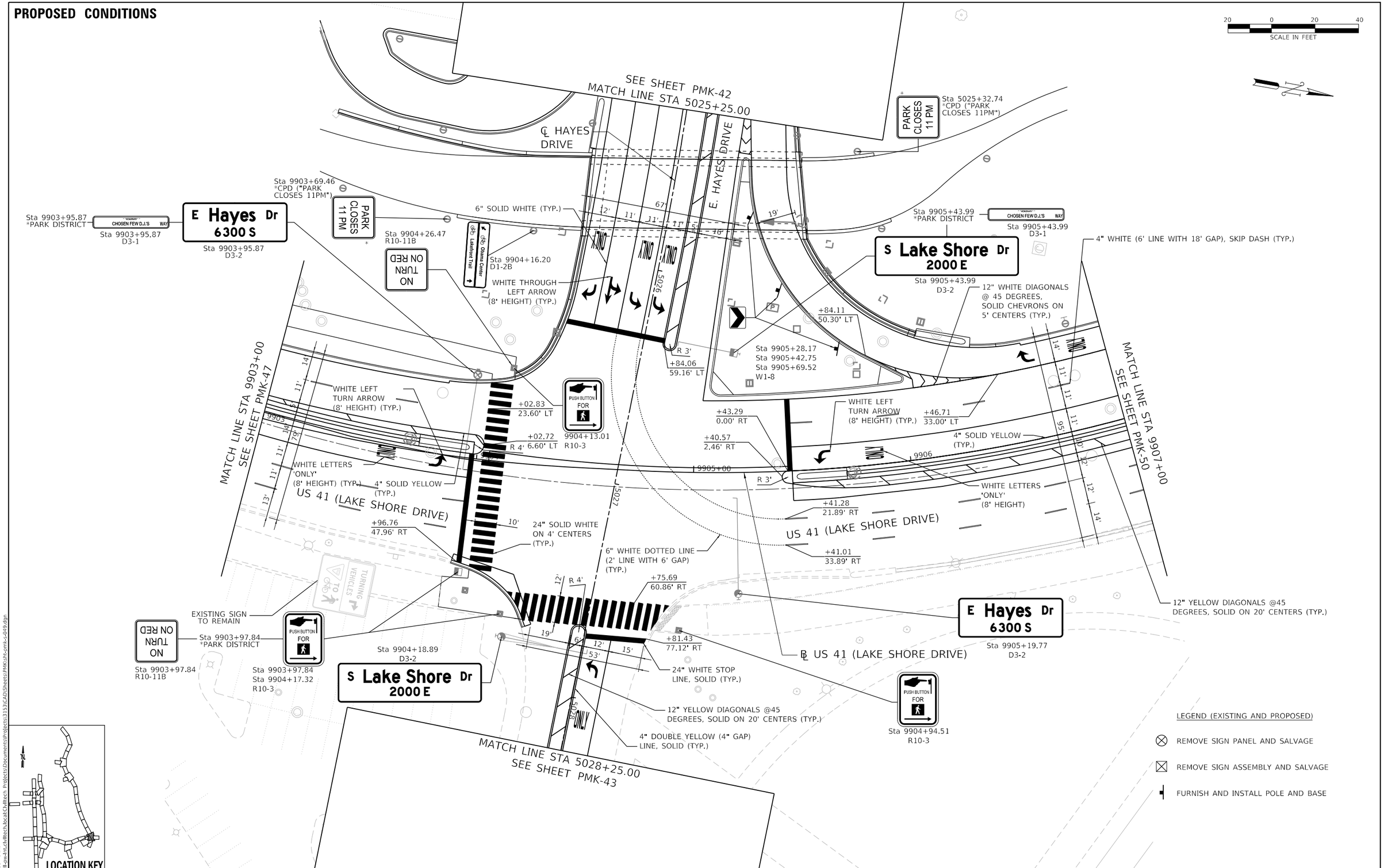


PLOT DATE: 2/15/2021
PLOT SCALE: 40.0000 ' / in.
FILE NAME: pw:\\civil-pw4int.civiltech.local:Civiltech Projects\Documents\Projects\3153\CAD\Sheets\PMK\sht-pmk-s-049.dgn

| | | | | |
|---|---|---|---|---|
| DESIGN: MG | | | | |
| DRAWN: MG | | | | |
| CHECKED: DM | | | | |
| APPROVED: | NO. | BY | DATE | DESCRIPTION |
| DATE: 01/22/2021 | REVISIONS | | | |

CDOT CHICAGO DEPARTMENT OF TRANSPORTATION

C*NECT

PAVEMENT MARKING AND SIGNING
PROPOSED CONDITIONS
S. LAKE SHORE DR.

JACKSON PARK MOBILITY IMPROVEMENTS

STA. 9903+00 TO STA. 9907+00

| | | |
|---|---|---|
| CONTRACT NO. - | TOTAL SHEETS 1434 | SHEET NO. 738 |
| PROJECT NO. B-7-203 | DRAWING NO. PMK-49 | |
| SCALE: 1"=20' | | |

## EXISTING CONDITIONS

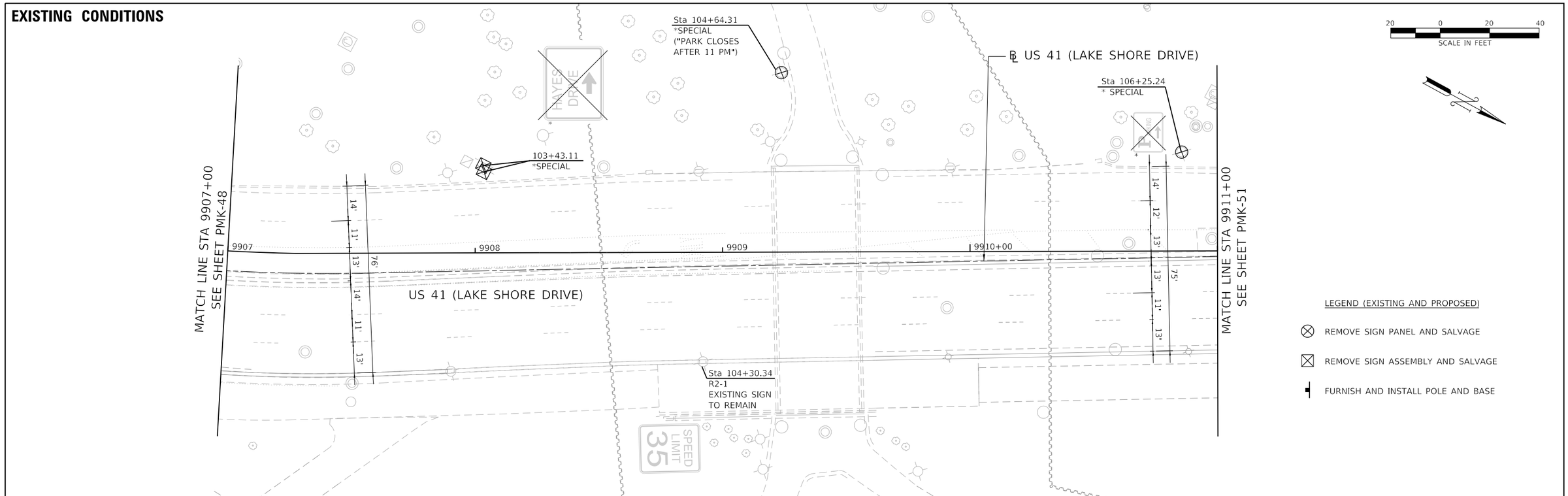


## PROPOSED CONDITIONS

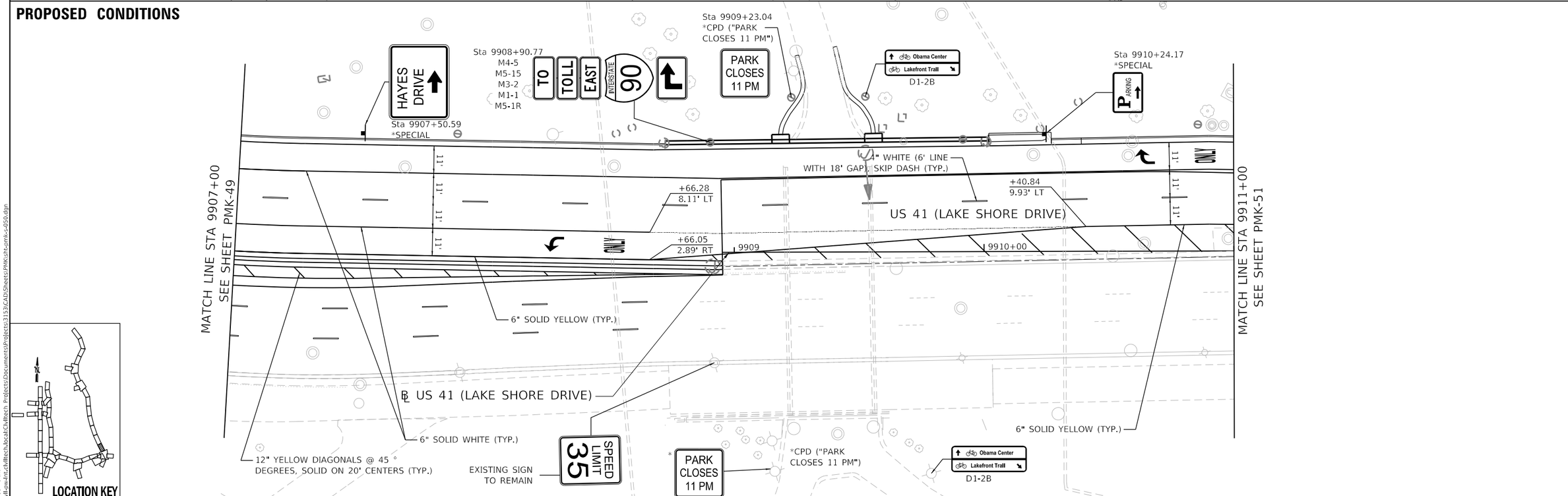


| | | | | | |
|---|---|---|---|---|---|
| DESIGN: | MG | | | SREV3 | |
| DRAWN: | MG | | | SREV2 | |
| CHECKED: | DM | | | SREV1 | |
| APPROVED: | | NO. | BY | DATE | DESCRIPTION |
| DATE: 01/22/2021 | | REVISIONS | | | |

CDOT CHICAGO DEPARTMENT OF TRANSPORTATION

C*NECT

PAVEMENT MARKING AND SIGNING
EXISTING & PROPOSED CONDITIONS
S. LAKE SHORE DR.

JACKSON PARK MOBILITY IMPROVEMENTS

STA. 9907+00 TO STA. 9911+00

| | | |
|---|---|---|
| CONTRACT NO. - | TOTAL SHEETS 1434 | SHEET NO. 739 |
| PROJECT NO. B-7-203 | DRAWING NO. PMK-50 | |
| SCALE: 1"=20' | | |

PLOT DATE: 2/15/2021
PLOT SCALE: 40.0000 ' / in.
FILE NAME: pw:\\cdot-pw-int.civiltech.local:Civiltech Projects\Documents\Projects\3153\CAD\Sheets\PMK\sht-pmk-s-050.dgn

## EXISTING CONDITIONS

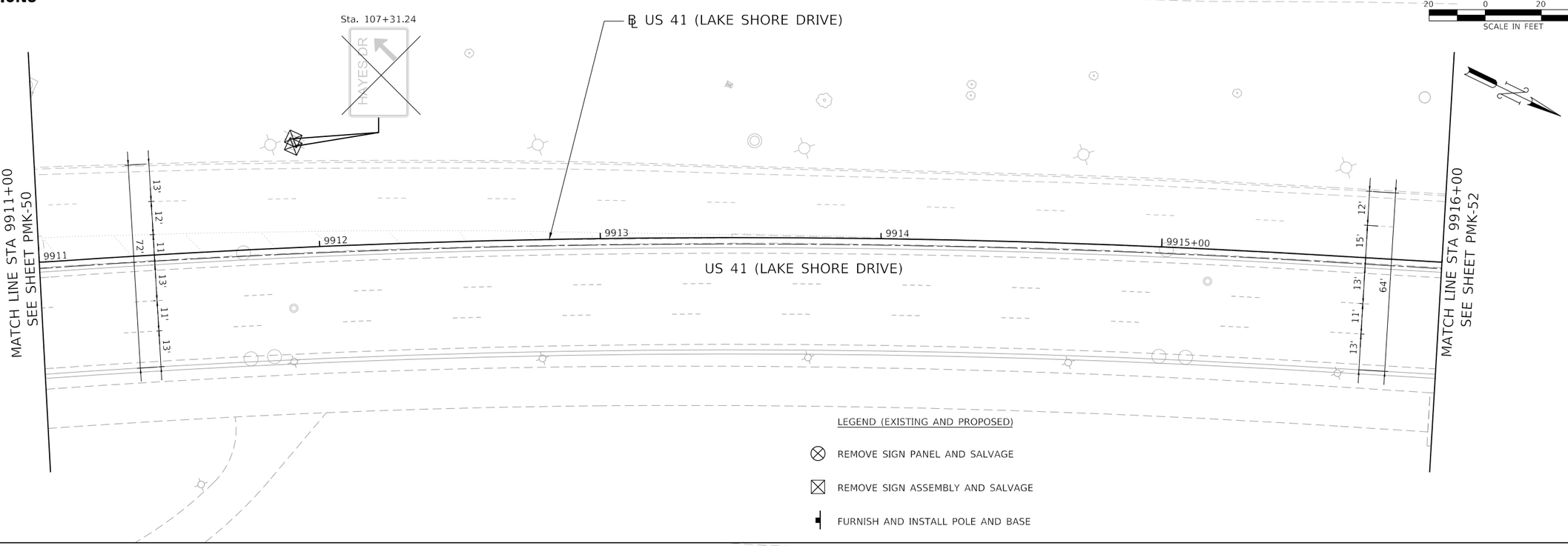


## PROPOSED CONDITIONS

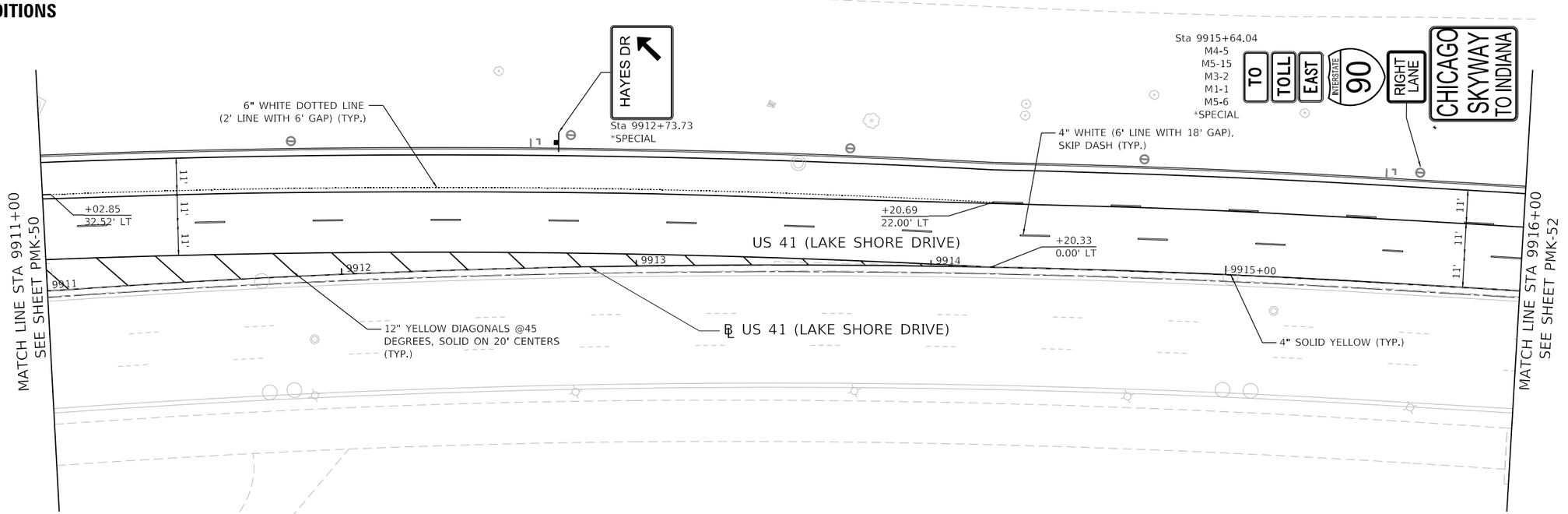


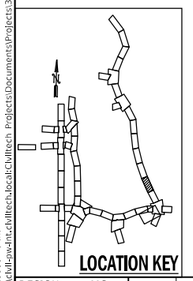


| | | | | | |
|---|---|---|---|---|---|
| DESIGN: MG | | | | $REV3 | |
| DRAWN: MG | | | | $REV2 | |
| CHECKED: DM | | | | $REV1 | |
| APPROVED: | NO. | BY | DATE | DESCRIPTION | |
| DATE: 01/22/2021 | REVISIONS | | | | |

CDOT CHICAGO DEPARTMENT OF TRANSPORTATION

C*NECT

**PAVEMENT MARKING AND SIGNING**
**EXISTING & PROPOSED CONDITIONS**
**S. LAKE SHORE DR.**

**JACKSON PARK MOBILITY IMPROVEMENTS**

STA. 9911+00 TO STA. 9916+00

| | | | |
|---|---|---|---|
| CONTRACT NO. - | | TOTAL SHEETS | SHEET NO. |
| PROJECT NO. B-7-203 | | 1434 | 740 |
| SCALE: 1"=20' | | DRAWING NO. PMK-51 | |

PLOT DATE: 2/15/2021
PLOT SCALE: 40.0000 ' / in.
FILE NAME: pw:\\cdot-pw-int-civiltech.bcad\Civiltech Projects\Documents\Projects\3153\CAD\Sheets\PMK\sht-pmk-c451.dgn

## EXISTING CONDITIONS

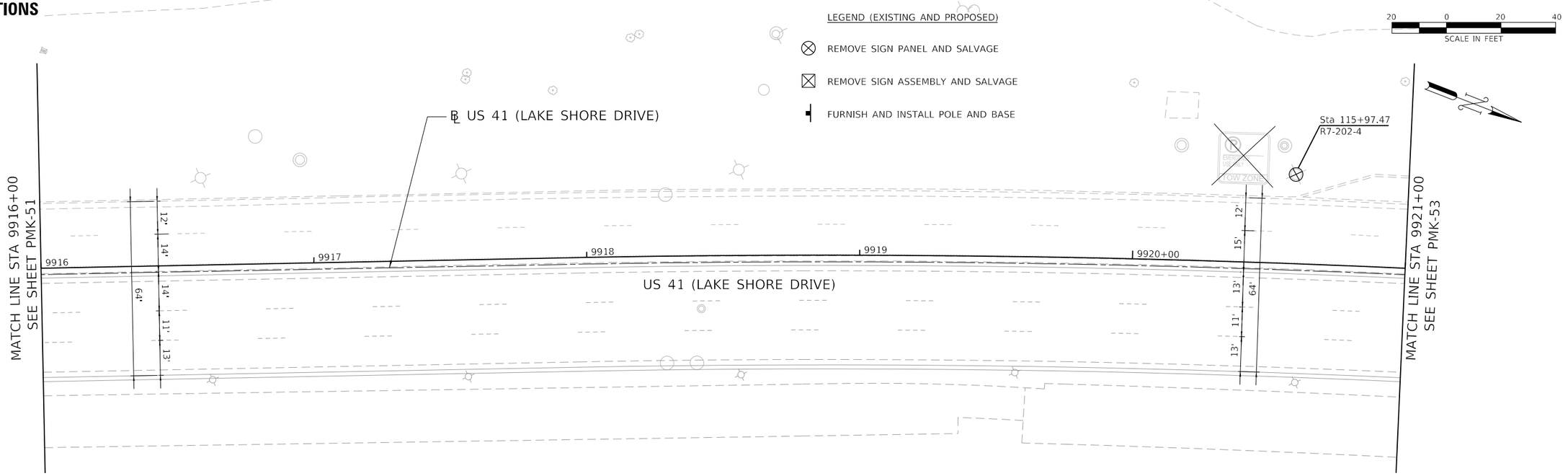


## PROPOSED CONDITIONS

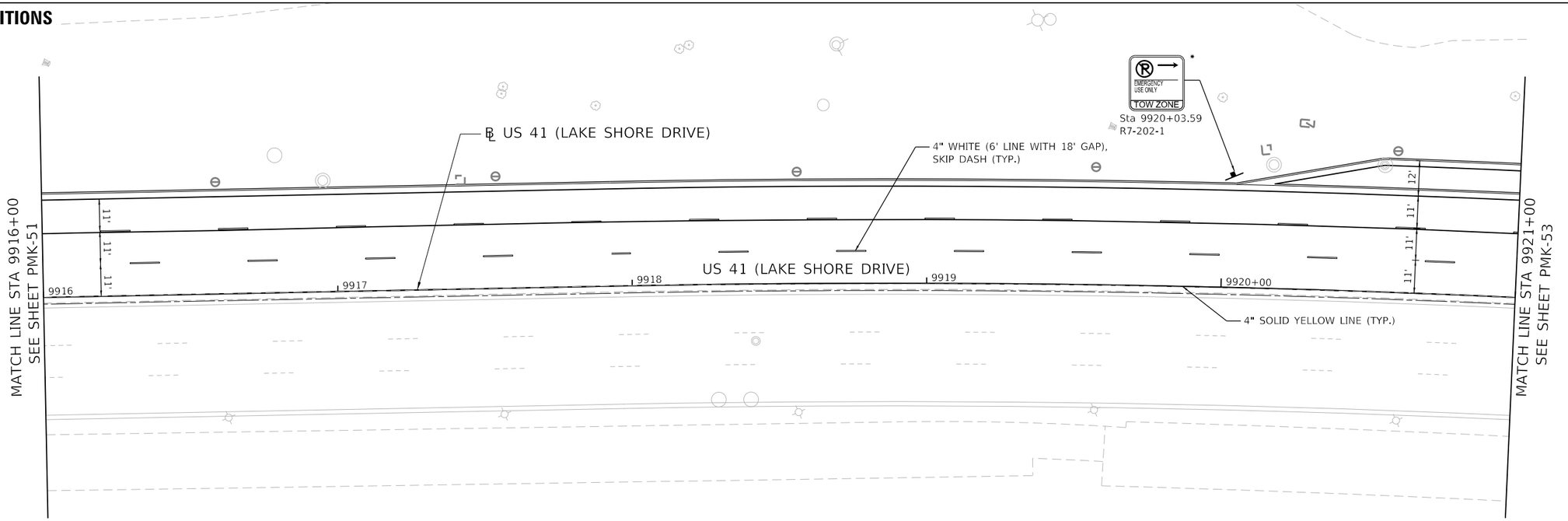


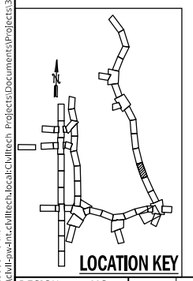


| | | | | | |
|---|---|---|---|---|---|
| DESIGN: MG | | | | SREV3 | |
| DRAWN: MG | | | | SREV2 | |
| CHECKED: DM | | | | SREV1 | |
| APPROVED: | NO. | BY | DATE | DESCRIPTION | |
| DATE: 01/22/2021 | REVISIONS | | | | |

CDOT CHICAGO DEPARTMENT OF TRANSPORTATION

C*NECT

**PAVEMENT MARKING AND SIGNING**
**EXISTING & PROPOSED CONDITIONS**
**S. LAKE SHORE DR.**

**JACKSON PARK MOBILITY IMPROVEMENTS**

STA. 9916+00 TO STA. 9921+00

| | |
|---|---|
| CONTRACT NO. | - |
| PROJECT NO. | B-7-203 |
| SCALE: | 1"=20' |

| TOTAL SHEETS | SHEET NO. |
|---|---|
| 1434 | 741 |
| DRAWING NO. | PMK-52 |

PLOT DATE: 2/15/2021
PLOT SCALE: 40.0000 ' / in.
FILE NAME: pw:\\cdot-pw-int-civiltech.bcat\Civiltech Projects\Documents\Projects\3153\CAD\Sheets\PMK\cdt-pmk-c452.dgn

## EXISTING CONDITIONS

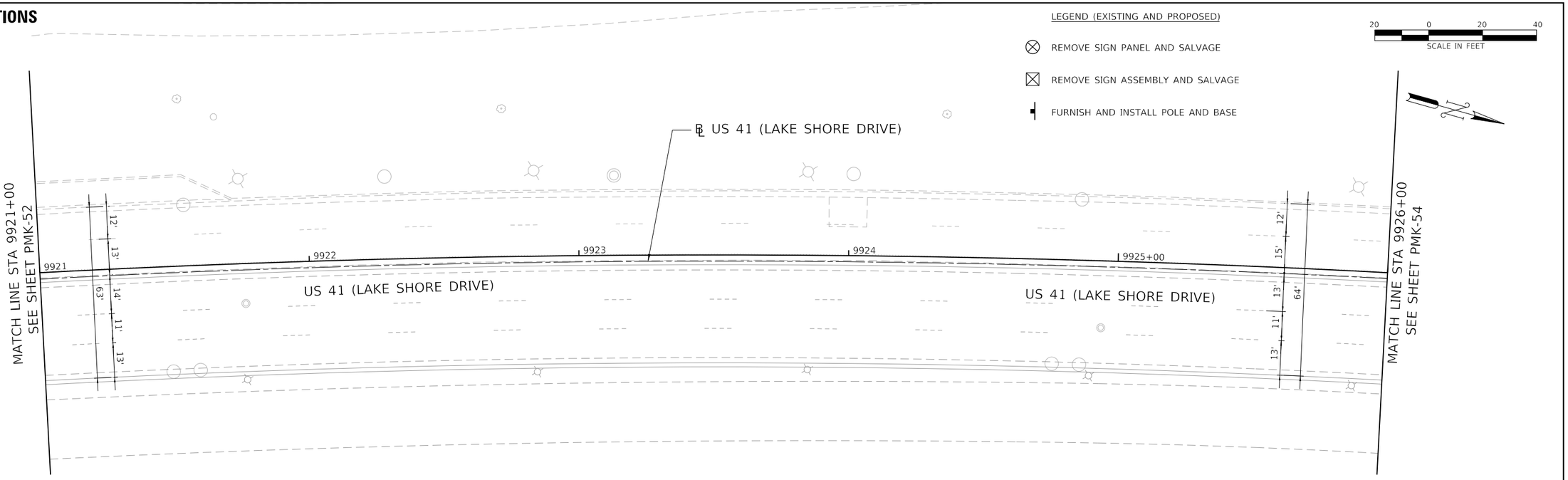


## PROPOSED CONDITIONS

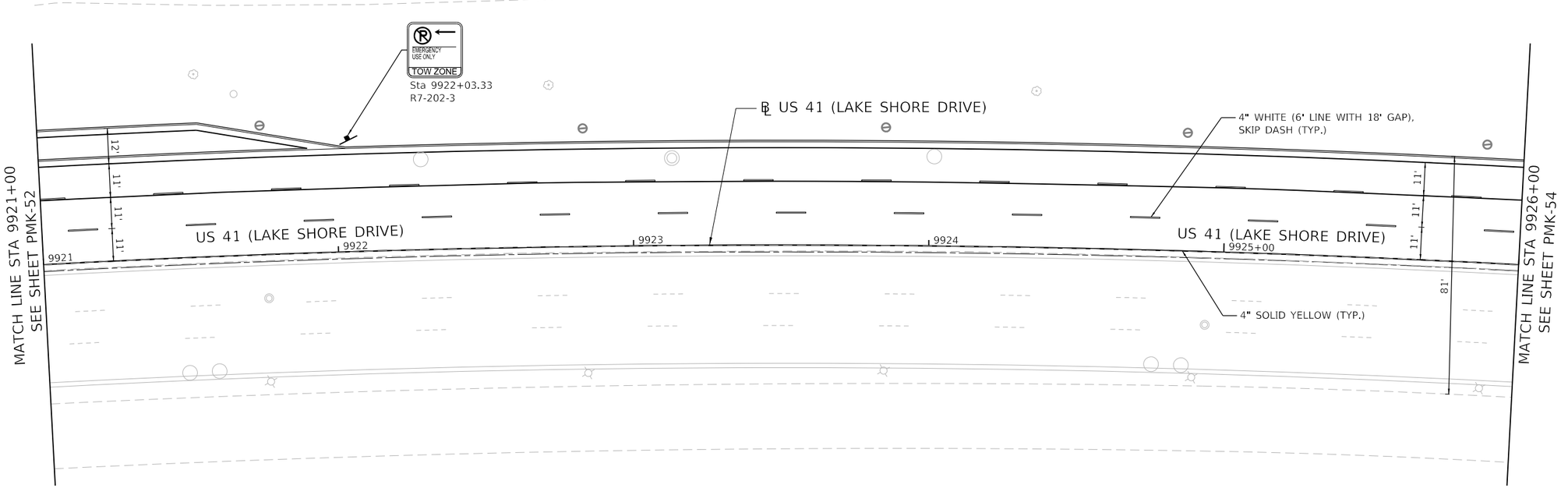


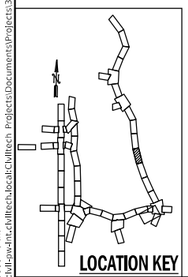


| | | | | | |
|---|---|---|---|---|---|
| DESIGN: MG | | | | $REV3 | |
| DRAWN: MG | | | | $REV2 | |
| CHECKED: DM | | | | $REV1 | |
| APPROVED: | NO. | BY | DATE | DESCRIPTION | |
| DATE: 01/22/2021 | REVISIONS | | | | |

CDOT CHICAGO DEPARTMENT OF TRANSPORTATION

C★NECT

**PAVEMENT MARKING AND SIGNING**
**EXISTING & PROPOSED CONDITIONS**
**S. LAKE SHORE DR.**

**JACKSON PARK MOBILITY IMPROVEMENTS**

STA. 9921+00 TO STA. 9926+00

| | | | |
|---|---|---|---|
| CONTRACT NO. - | | TOTAL SHEETS | SHEET NO. |
| PROJECT NO. B-7-203 | | 1434 | 742 |
| SCALE: 1"=20' | | DRAWING NO. PMK-53 | |

PLOT DATE: 2/15/2021
PLOT SCALE: 40.0000 ' / in.
FILE NAME: pw:\\cdot-pw-int-civiltech.bcat\Civiltech Projects\Documents\Projects\3153\CAD\Sheets\PMK\cdt-pmk-c453.dgn

## EXISTING CONDITIONS

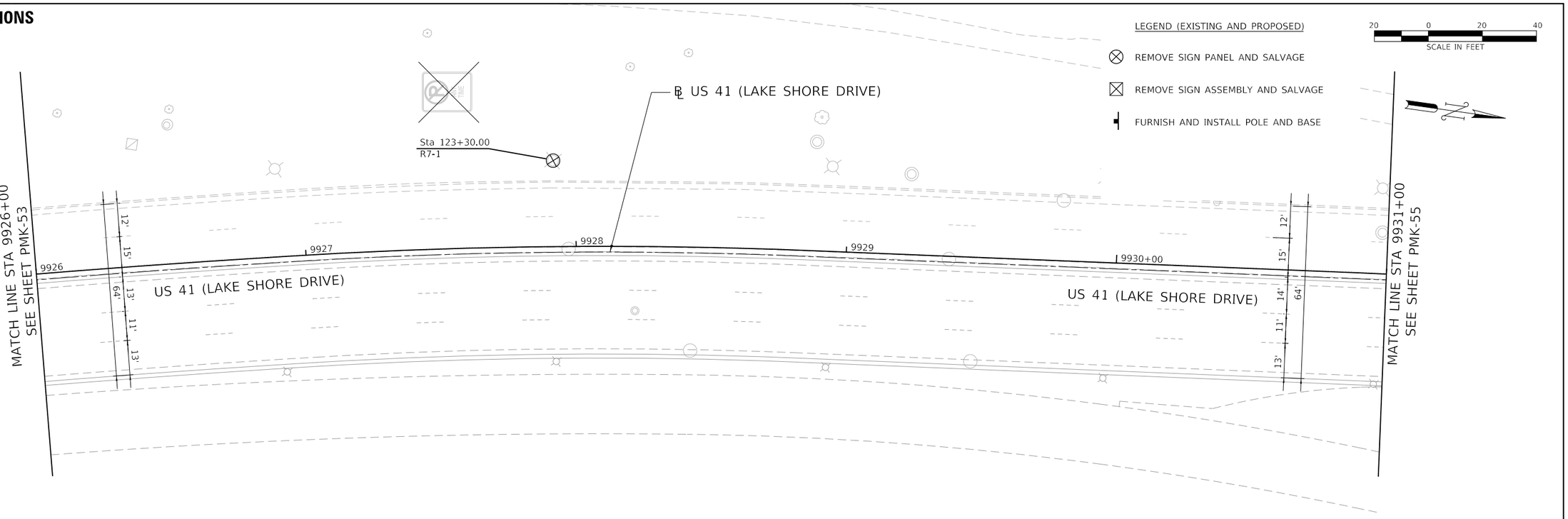


## PROPOSED CONDITIONS

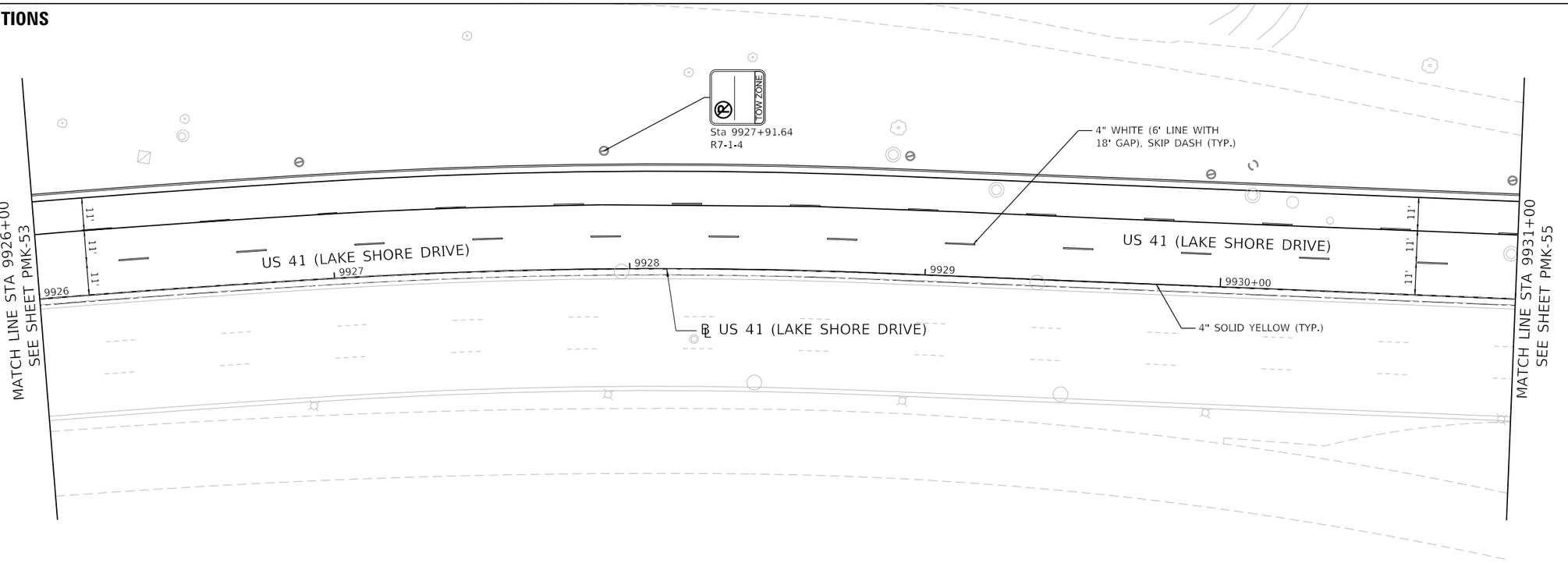


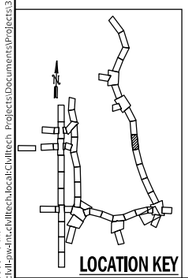


LOCATION KEY

| | | | | | |
|---|---|---|---|---|---|
| DESIGN: MG | | | | $REV3 | |
| DRAWN: MG | | | | $REV2 | |
| CHECKED: DM | | | | $REV1 | |
| APPROVED: | NO. | BY | DATE | DESCRIPTION | |
| DATE: 01/22/2021 | REVISIONS | | | | |

CDOT CHICAGO DEPARTMENT OF TRANSPORTATION

C★NECT

**PAVEMENT MARKING AND SIGNING**
**EXISTING & PROPOSED CONDITIONS**
**S. LAKE SHORE DR.**

**JACKSON PARK MOBILITY IMPROVEMENTS**

STA. 9926+00 TO STA. 9931+00

| | |
|---|---|
| CONTRACT NO. - | TOTAL SHEETS 1434 |
| PROJECT NO. B-7-203 | SHEET NO. 743 |
| SCALE: 1"=20' | DRAWING NO. PMK-54 |

PLOT DATE: 2/15/2021
PLOT SCALE: 40.0000 ' / in.
FILE NAME: pw:\\cdot-pw-int-civiltech.bcad\Civiltech Projects\Documents\Projects\3153\CADD\Sheets\PMK\cdt-pmk-c454.dgn

## EXISTING CONDITIONS

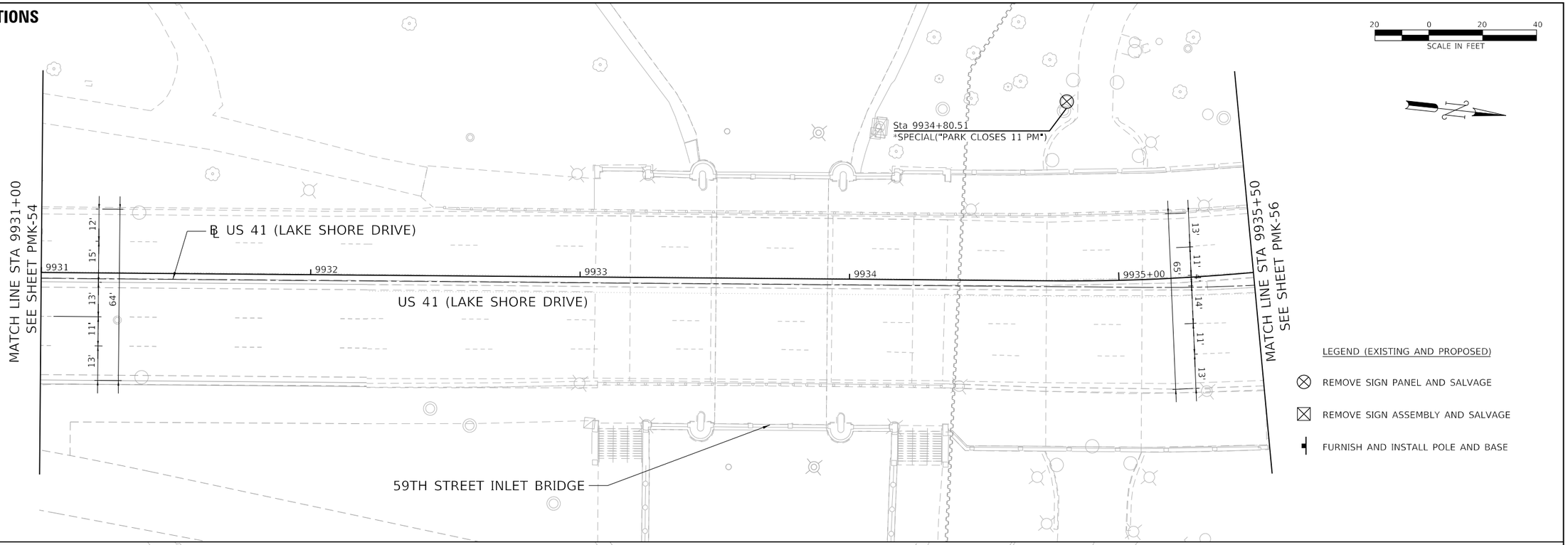


## PROPOSED CONDITIONS

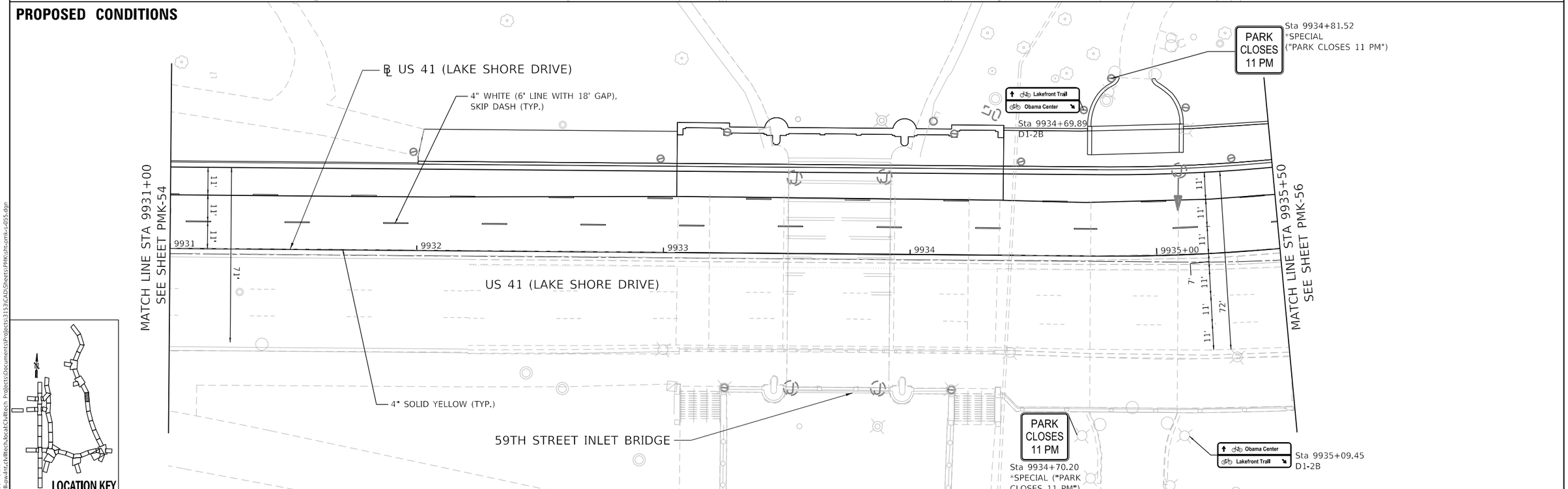





LOCATION KEY

PLOT DATE: 2/15/2021
PLOT SCALE: 40.0000 ' / in.
FILE NAME: pw:\\civil-pw-int.civiltech.local:Civiltech Projects\Documents\Projects\3153\CAD\Sheets\PMK\sht-pmk-s-055.dgn

| | | | | | |
|---|---|---|---|---|---|
| DESIGN: | MG | | | SREV3 | |
| DRAWN: | MG | | | SREV2 | |
| CHECKED: | DM | | | SREV1 | |
| APPROVED: | | NO. | BY | DATE | DESCRIPTION |
| DATE: 01/22/2021 | | REVISIONS | | | |

CDOT CHICAGO DEPARTMENT OF TRANSPORTATION

C*NECT

PAVEMENT MARKING AND SIGNING
EXISTING & PROPOSED CONDITIONS
S. LAKE SHORE DR.

JACKSON PARK MOBILITY IMPROVEMENTS

STA. 9931+00 TO STA. 9935+50

| | | | |
|---|---|---|---|
| CONTRACT NO. - | TOTAL SHEETS | SHEET NO. |
| PROJECT NO. B-7-203 | 1434 | 744 |
| SCALE: 1"=20' | DRAWING NO. PMK-55 | |

## EXISTING CONDITIONS

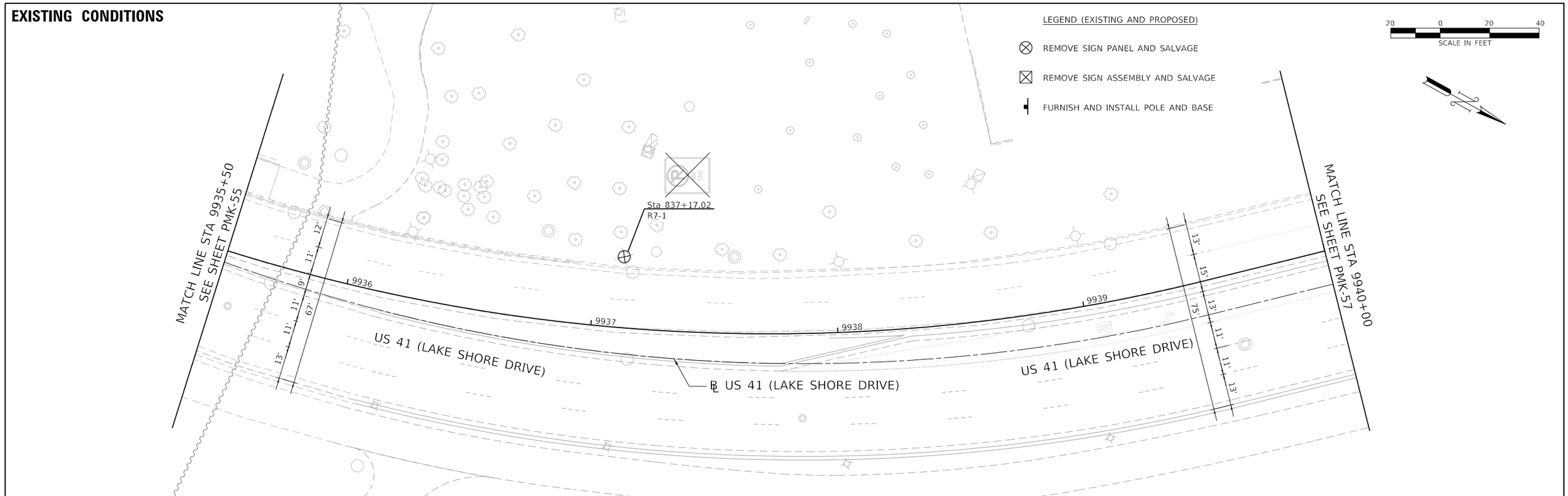


## PROPOSED CONDITIONS

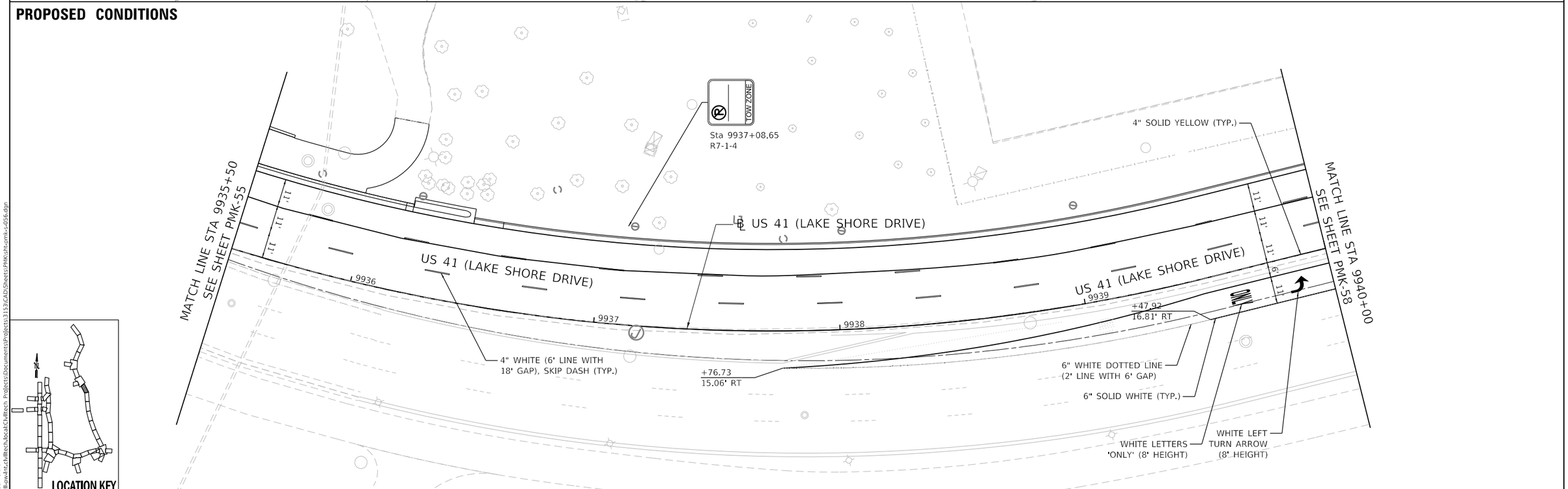





LOCATION KEY

PLOT DATE: 2/15/2021
PLOT SCALE: 40.0000 ' / in.
FILE NAME: pw:\\civil-pw-int.civiltech.local:Civiltech Projects\Documents\Projects\3153\CAD\Sheets\PMK\sht-pmk-s-056.dgn

| | | | | | |
|---|---|---|---|---|---|
| DESIGN: | MG | | | SREV3 | |
| DRAWN: | MG | | | SREV2 | |
| CHECKED: | DM | | | SREV1 | |
| APPROVED: | | NO. | BY | DATE | DESCRIPTION |
| DATE: 01/22/2021 | | REVISIONS | | | |

CDOT CHICAGO DEPARTMENT OF TRANSPORTATION

C*NECT

PAVEMENT MARKING AND SIGNING
EXISTING & PROPOSED CONDITIONS
S. LAKE SHORE DR.

JACKSON PARK MOBILITY IMPROVEMENTS

STA. 9935+50 TO STA. 9940+00

| | | | |
|---|---|---|---|
| CONTRACT NO. - | TOTAL SHEETS 1434 | SHEET NO. 745 | |
| PROJECT NO. B-7-203 | DRAWING NO. PMK-56 | | |
| SCALE: 1"=20' | | | |

## EXISTING CONDITIONS

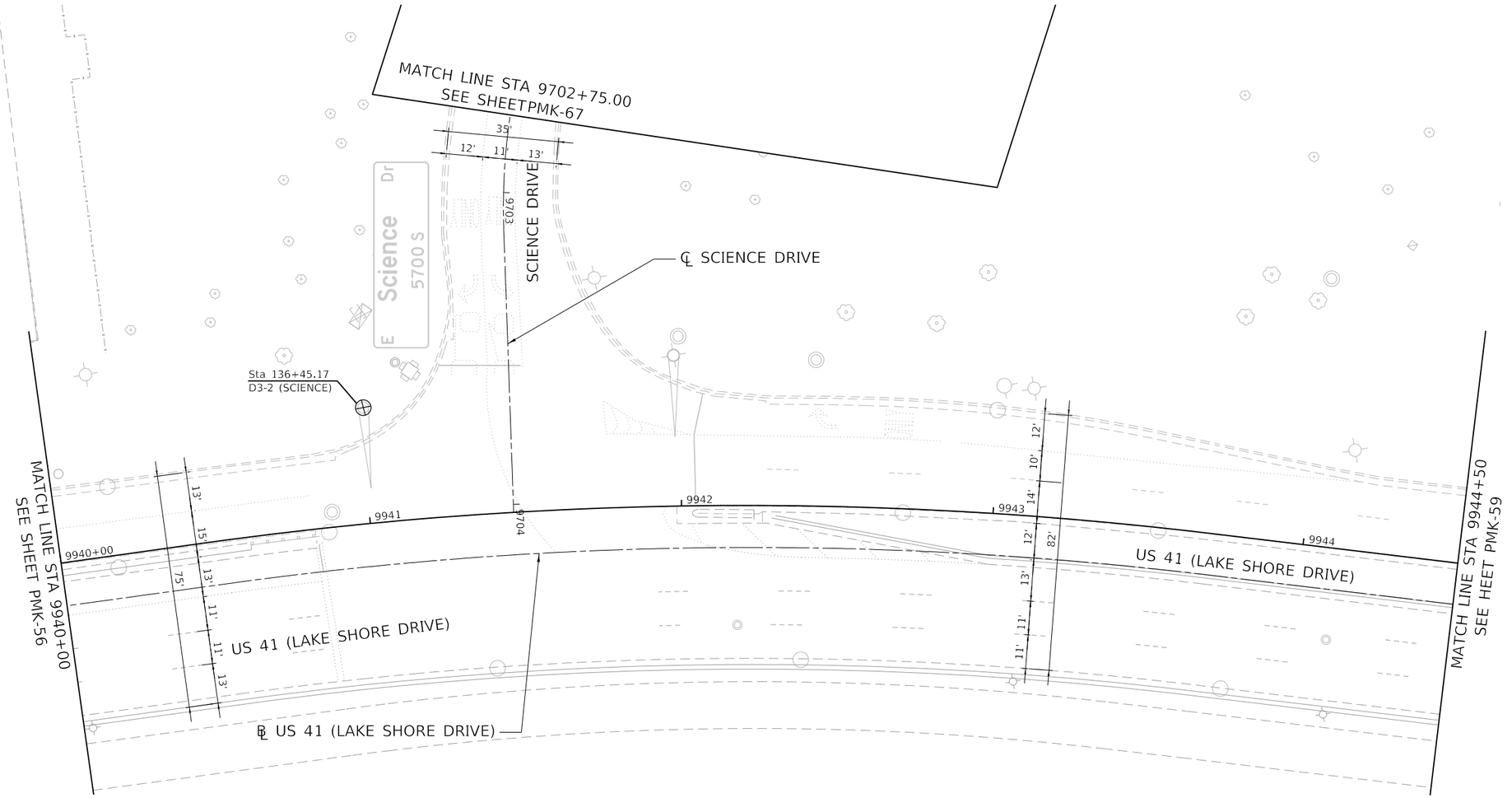


LEGEND (EXISTING AND PROPOSED)

- ⊗ REMOVE SIGN PANEL AND SALVAGE
- ⊠ REMOVE SIGN ASSEMBLY AND SALVAGE
- ▪ FURNISH AND INSTALL POLE AND BASE

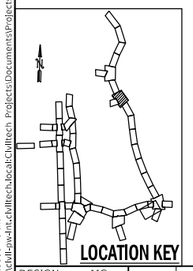


| | | | | |
|---|---|---|---|---|
| DESIGN: MG | | | | |
| DRAWN: MG | | | | |
| CHECKED: DM | | | | |
| APPROVED: | NO. | BY | DATE | DESCRIPTION |
| DATE: 01/22/2021 | REVISIONS | | | |

CDOT CHICAGO DEPARTMENT OF TRANSPORTATION

C★NECT

PAVEMENT MARKING AND SIGNING
EXISTING CONDITIONS
S. LAKE SHORE DR.

JACKSON PARK MOBILITY IMPROVEMENTS

STA. 9940+00 TO STA. 9944+50

| | | | |
|---|---|---|---|
| CONTRACT NO. - | | TOTAL SHEETS 1434 | SHEET NO. 746 |
| PROJECT NO. B-7-203 | | DRAWING NO. PMK-57 | |
| SCALE: 1"=20' | | | |

PLOT DATE: 2/15/2021
PLOT SCALE: 40.0000 ' / in.
FILE NAME: pw:\cdot-pw-int.civiltech.local:CivilTech Projects:Documents\Projects:3153\CADD\Sheets:PMK\plt-pmk-s-057.dgn

## PROPOSED CONDITIONS

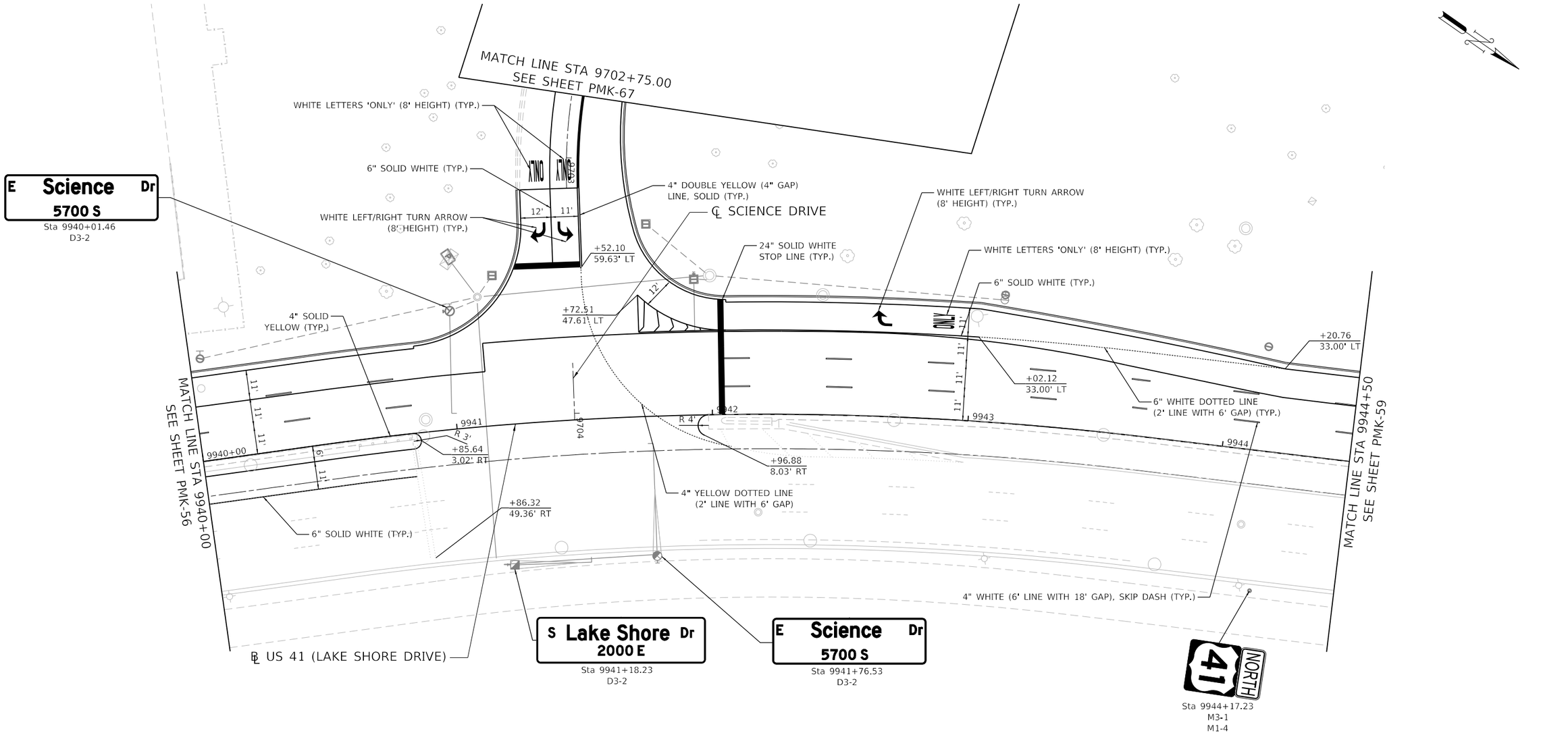


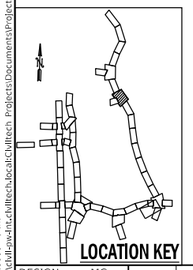


LEGEND (EXISTING AND PROPOSED)

- REMOVE SIGN PANEL AND SALVAGE
- REMOVE SIGN ASSEMBLY AND SALVAGE
- FURNISH AND INSTALL POLE AND BASE

PLOT DATE: 2/15/2021
PLOT SCALE: 40.0000 ' / in.
FILE NAME: pw:\\civil-pw-int.civiltech.local:Civiltech Projects\Documents\Projects\3153\CAD\Sheets\PMK\sht-pmk-s-058.dgn

| | | | | |
|---|---|---|---|---|
| DESIGN: MG | | | | |
| DRAWN: MG | | | | |
| CHECKED: DM | | | | |
| APPROVED: | NO. | BY | DATE | DESCRIPTION |
| DATE: 01/22/2021 | REVISIONS | | | |

CDOT CHICAGO DEPARTMENT OF TRANSPORTATION

C*NECT

PAVEMENT MARKING AND SIGNING
PROPOSED CONDITIONS
S. LAKE SHORE DR.

JACKSON PARK MOBILITY IMPROVEMENTS

STA. 9940+00 TO STA. 9944+50

| | | |
|---|---|---|
| CONTRACT NO. - | TOTAL SHEETS 1434 | SHEET NO. 747 |
| PROJECT NO. B-7-203 | DRAWING NO. PMK-58 | |
| SCALE: 1"=20' | | |

## EXISTING CONDITIONS

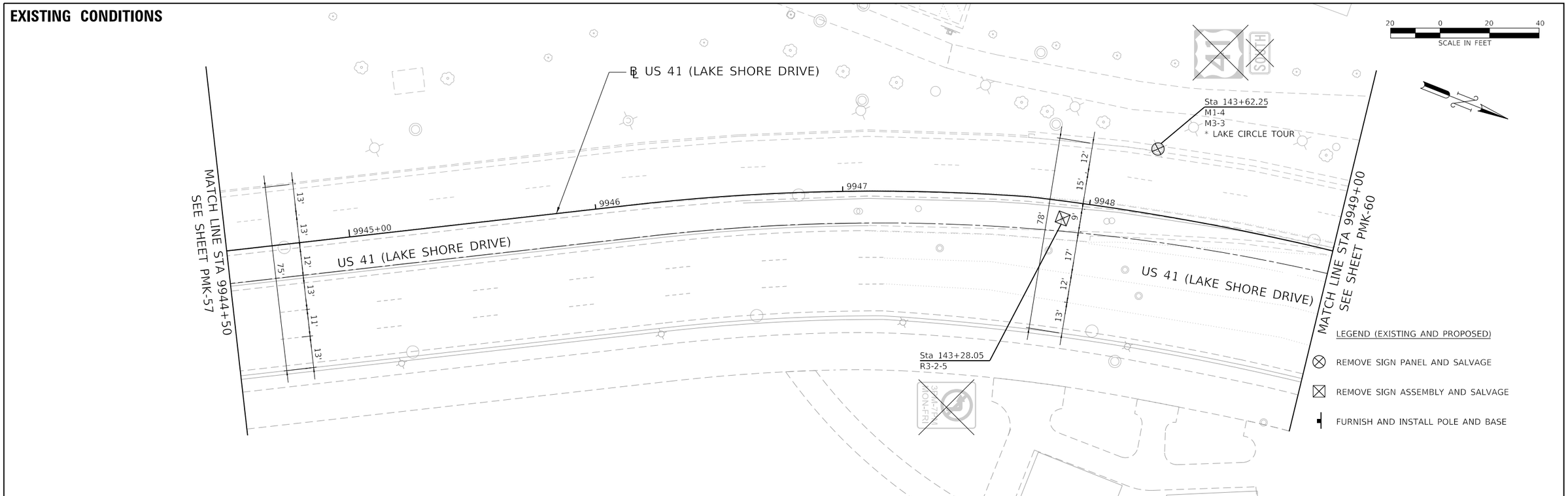


## PROPOSED CONDITIONS

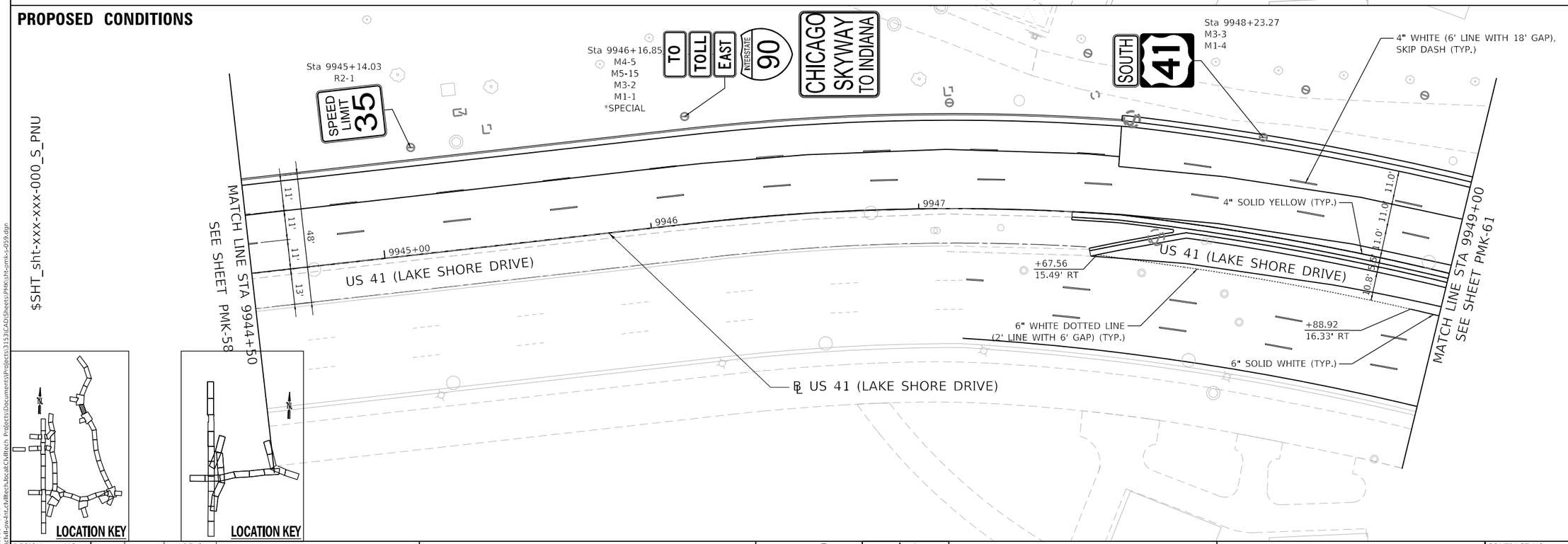


$SHT_sht-xxx-xxx-000_S_PNU

| | | | | | |
|---|---|---|---|---|---|
| DESIGN: | MG | | | $REV3 | |
| DRAWN: | MG | | | $REV2 | |
| CHECKED: | DM | | | $REV1 | |
| APPROVED: | | NO. | BY | DATE | DESCRIPTION |
| DATE: 01/22/2021 | | REVISIONS | | | |

CDOT CHICAGO DEPARTMENT OF TRANSPORTATION

C*NECT

PAVEMENT MARKING AND SIGNING
EXISTING & PROPOSED CONDITIONS
S. LAKE SHORE DR.

JACKSON PARK MOBILITY IMPROVEMENTS

STA. 9944+50 TO STA. 9949+00

| | | | |
|---|---|---|---|
| CONTRACT NO. - | TOTAL SHEETS | SHEET NO. | |
| PROJECT NO. B-7-203 | 1434 | 748 | |
| SCALE: 1"=20' | DRAWING NO. PMK-59 | | |

PLOT DATE: 2/15/2021
PLOT SCALE: 40.0000 ' / in.
FILE NAME: pw:\\cdot-pw-int.civiltech.local:Civiltech Projects\Documents\Projects\3153\CAD\Sheets\PMK\sht-pmk-s-059.dgn

# EXISTING CONDITIONS

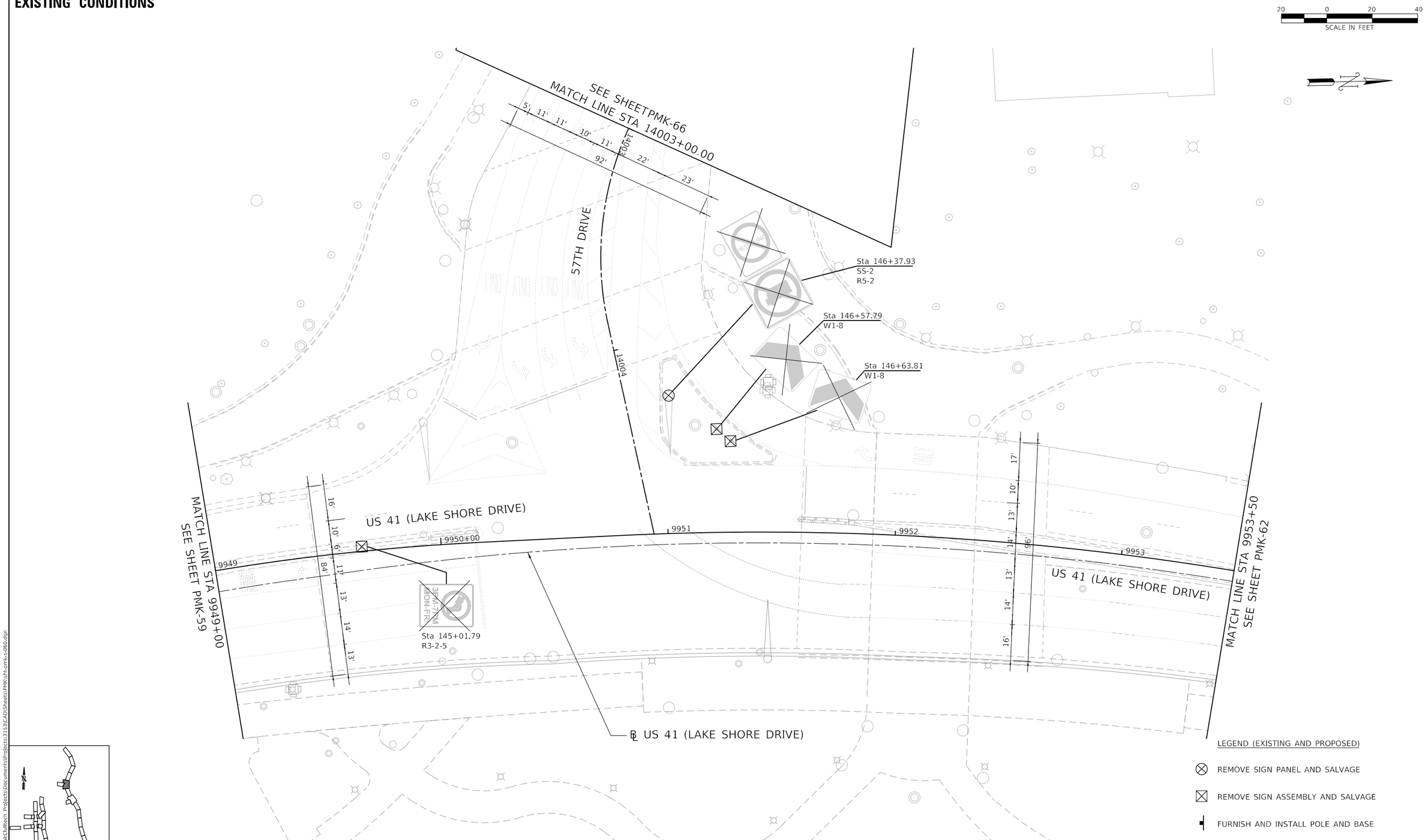


PLOT DATE: 2/15/2021
PLOT SCALE: 40.0000 ' / in.
FILE NAME: pw:\\civil-pw-int.civiltech.local:Civiltech Projects\Documents\Projects\3153\CAD\Sheets\PMK\sht-pmk-s-060.dgn

| | | | | |
|---|---|---|---|---|
| DESIGN: MG | | | | |
| DRAWN: MG | | | | |
| CHECKED: DM | | | | |
| APPROVED: | NO. | BY | DATE | DESCRIPTION |
| DATE: 01/22/2021 | REVISIONS | | | |

CDOT CHICAGO DEPARTMENT OF TRANSPORTATION

C*NECT

PAVEMENT MARKING AND SIGNING
EXISTING CONDITIONS
S. LAKE SHORE DR.

JACKSON PARK MOBILITY IMPROVEMENTS

STA. 9949+00 TO STA. 9953+50

| | | |
|---|---|---|
| CONTRACT NO. - | TOTAL SHEETS 1434 | SHEET NO. 749 |
| PROJECT NO. B-7-203 | DRAWING NO. PMK-60 | |
| SCALE: 1"=20' | | |

## PROPOSED CONDITIONS

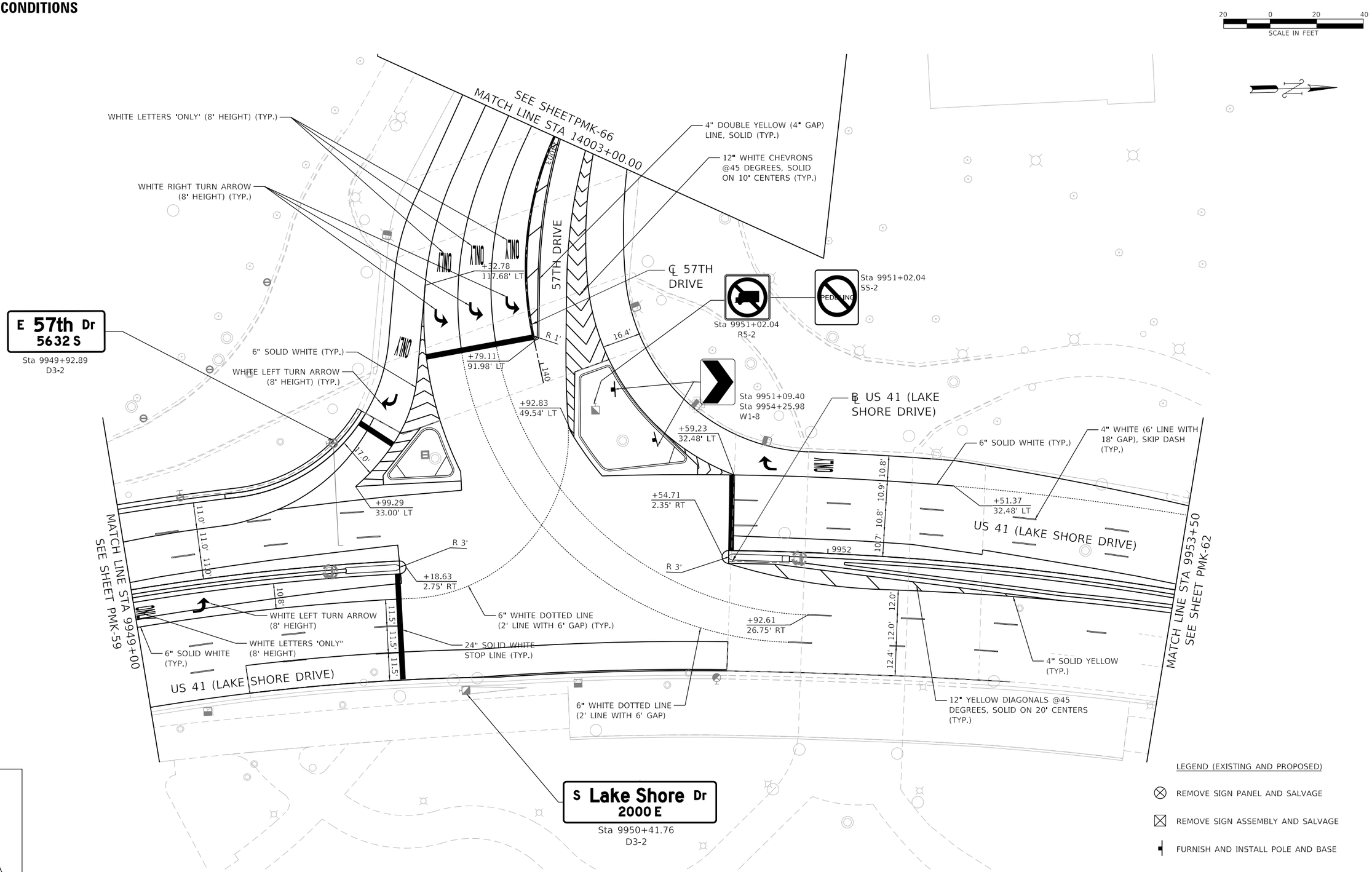


PLOT DATE: 2/15/2021
PLOT SCALE: 40.0000 ' / in.
FILE NAME: pw:\\cdot-pw-int.civiltech.local:Civiltech Projects\Documents\Projects\3153\CAD\Sheets\PMK\sht-pmk-s-061.dgn

| | | | | |
|---|---|---|---|---|
| DESIGN: MG | | | | |
| DRAWN: MG | | | | |
| CHECKED: DM | | | | |
| APPROVED: | NO. | BY | DATE | DESCRIPTION |
| DATE: 01/22/2021 | REVISIONS | | | |

CDOT CHICAGO DEPARTMENT OF TRANSPORTATION

C*NECT

PAVEMENT MARKING AND SIGNING
PROPOSED CONDITIONS
S. LAKE SHORE DR.

JACKSON PARK MOBILITY IMPROVEMENTS

STA. 9949+00 TO STA. 9953+50

| | | |
|---|---|---|
| CONTRACT NO. - | TOTAL SHEETS 1434 | SHEET NO. 750 |
| PROJECT NO. B-7-203 | DRAWING NO. PMK-61 | |
| SCALE: 1"=20' | | |

## EXISTING CONDITIONS

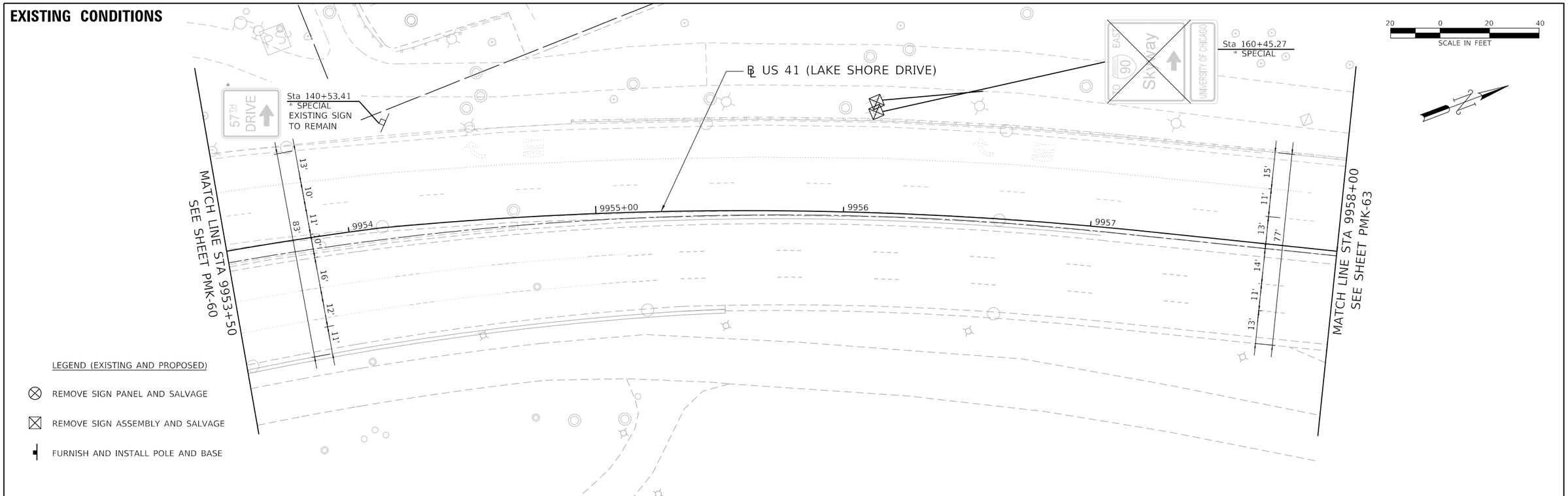


## PROPOSED CONDITIONS

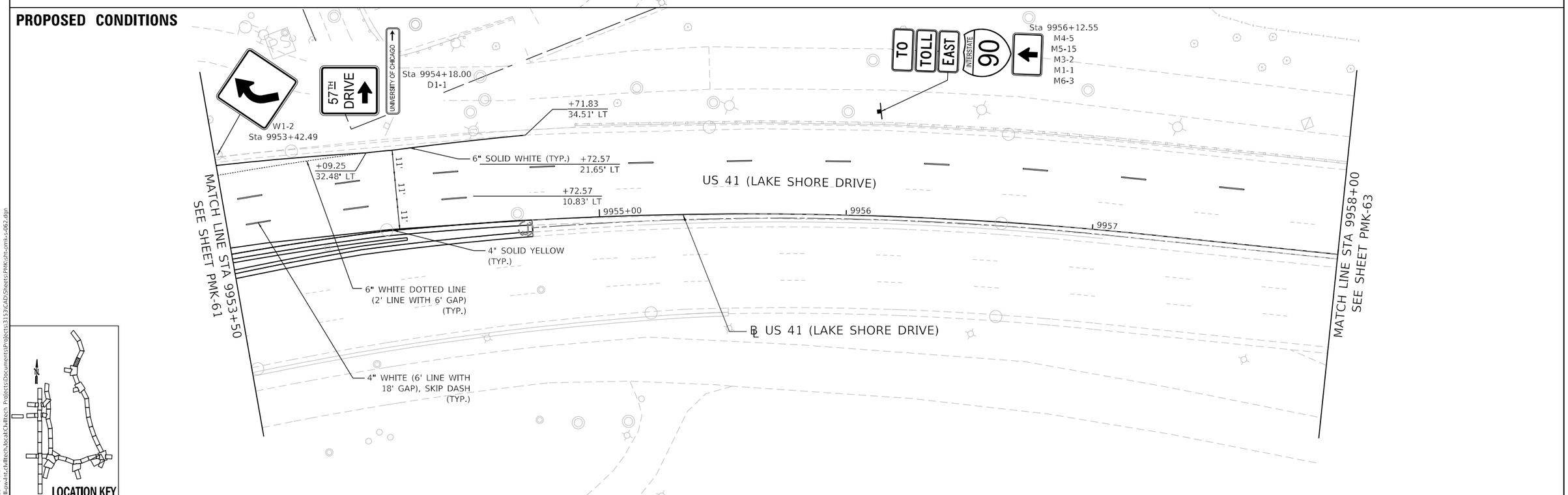





LOCATION KEY

| | | | | | |
|---|---|---|---|---|---|
| DESIGN: | MG | | | $REV3 | |
| DRAWN: | MG | | | $REV2 | |
| CHECKED: | DM | | | $REV1 | |
| APPROVED: | | NO. | BY | DATE | DESCRIPTION |
| DATE: 01/22/2021 | | REVISIONS | | | |

CDOT CHICAGO DEPARTMENT OF TRANSPORTATION

C*NECT

PAVEMENT MARKING AND SIGNING
EXISTING & PROPOSED CONDITIONS
S. LAKE SHORE DR.

JACKSON PARK MOBILITY IMPROVEMENTS

STA. 9953+50 TO STA. 9958+00

| | | |
|---|---|---|
| CONTRACT NO. - | TOTAL SHEETS 1434 | SHEET NO. 751 |
| PROJECT NO. B-7-203 | DRAWING NO. PMK-62 | |
| SCALE: 1"=20' | | |

PLOT DATE: 2/15/2021
PLOT SCALE: 40.0000 ' / in.
FILE NAME: pw:\\civil-pw-int.civiltech.local:Civiltech Projects\Documents\Projects\3153\CAD\Sheets\PMK\sht-pmk-s-062.dgn

## EXISTING CONDITIONS




## PROPOSED CONDITIONS







LOCATION KEY

PLOT DATE: 2/15/2021
PLOT SCALE: 40.0000 ' / in.
FILE NAME: pw:\\civil-pw-int.civiltech.local:Civiltech Projects\Documents\Projects\3153\CAD\Sheets\PMK\sht-pmk-s-063.dgn

| | | | | | |
|---|---|---|---|---|---|
| DESIGN: | MG | | | $REV3 | |
| DRAWN: | MG | | | $REV2 | |
| CHECKED: | DM | | | $REV1 | |
| APPROVED: | | NO. | BY | DATE | DESCRIPTION |
| DATE: 01/22/2021 | | REVISIONS | | | |

CDOT CHICAGO DEPARTMENT OF TRANSPORTATION

C*NECT

PAVEMENT MARKING AND SIGNING
EXISTING & PROPOSED CONDITIONS
S. LAKE SHORE DR.

JACKSON PARK MOBILITY IMPROVEMENTS

STA. 9958+00 TO STA. 157+35

| | | |
|---|---|---|
| CONTRACT NO. - | TOTAL SHEETS 1434 | SHEET NO. 752 |
| PROJECT NO. B-7-203 | DRAWING NO. PMK-63 | |
| SCALE: 1"=20' | | |

## EXISTING CONDITIONS

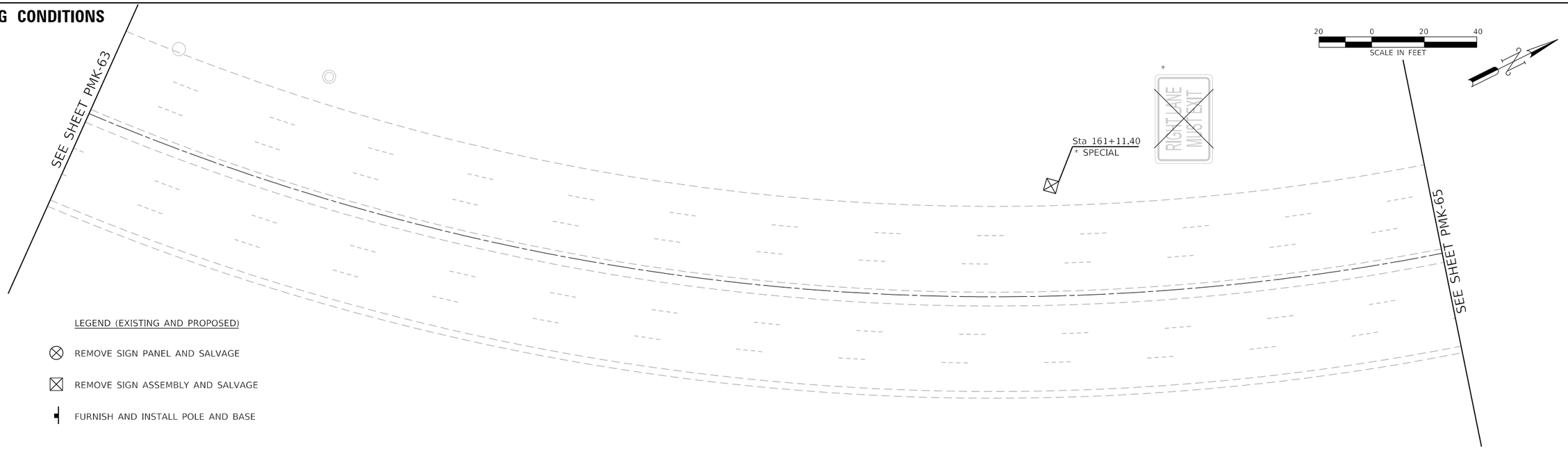


## PROPOSED CONDITIONS

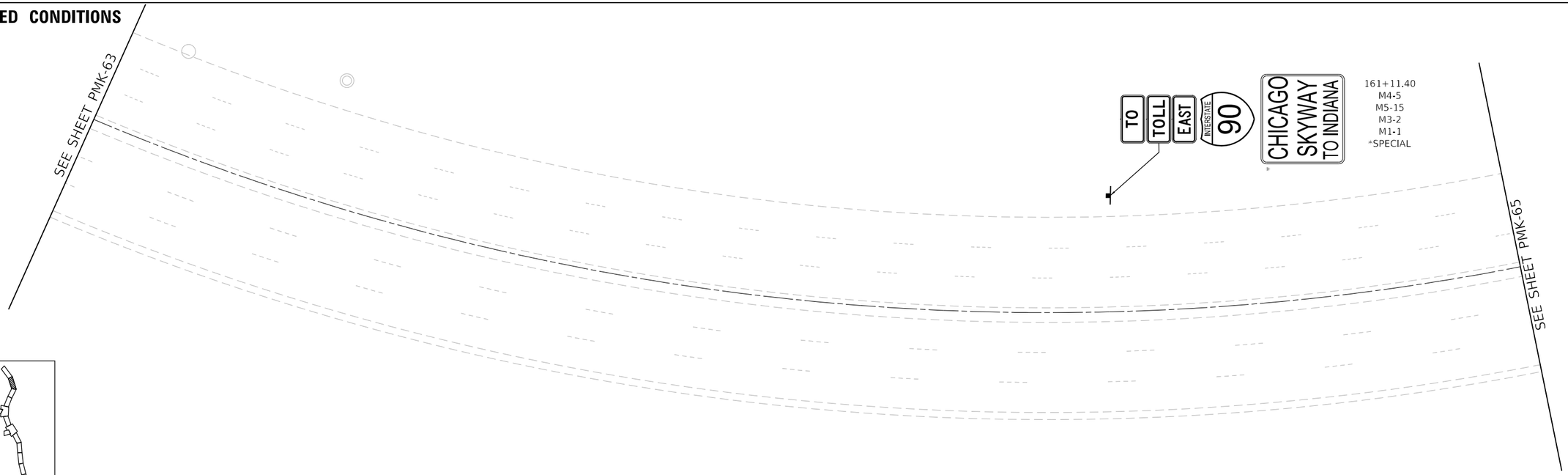


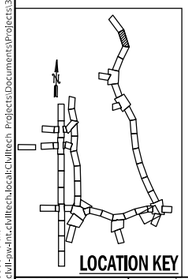


LOCATION KEY

| | | | | | |
|---|---|---|---|---|---|
| DESIGN: ALK | | | | SREV3 | |
| DRAWN: ALK | | | | SREV2 | |
| CHECKED: DM | | | | SREV1 | |
| APPROVED: | NO. | BY | DATE | DESCRIPTION | |
| DATE: 01/22/2021 | REVISIONS | | | | |

CDOT CHICAGO DEPARTMENT OF TRANSPORTATION

C*NECT

**PAVEMENT MARKING AND SIGNING**
**EXISTING & PROPOSED CONDITIONS**
**S. LAKE SHORE DR.**

**JACKSON PARK MOBILITY IMPROVEMENTS**

STA. 157+35 TO STA. 162+60

| | | | |
|---|---|---|---|
| CONTRACT NO. - | | TOTAL SHEETS | SHEET NO. |
| PROJECT NO. B-7-203 | | 1434 | 753 |
| SCALE: 1"=20' | | DRAWING NO. PMK-64 | |

PLOT DATE: 2/15/2021
PLOT SCALE: 40.0000 ' / in.
FILE NAME: pw:\\cdot-pw-int-civiltech.bcat\Civiltech Projects\Documents\Projects\3153\CAD\Sheets\PMK\cdt-pmk-c464.dgn

## EXISTING CONDITIONS

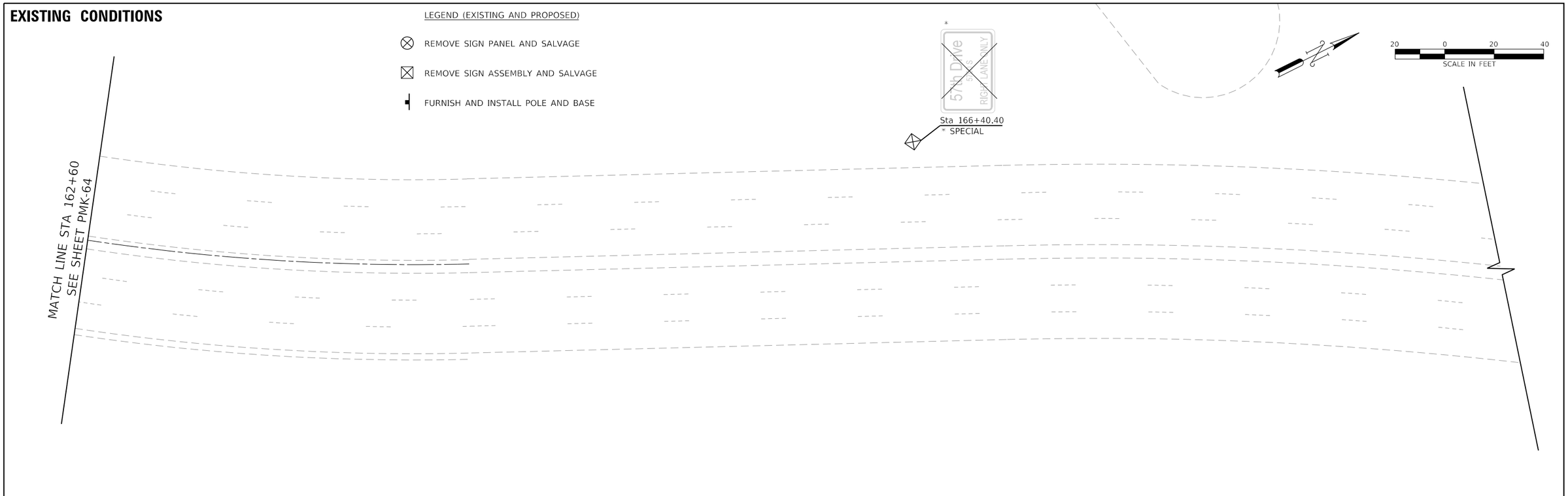


## PROPOSED CONDITIONS






LOCATION KEY

| | | | | | |
|---|---|---|---|---|---|
| DESIGN: | ALK | | | $REV3 | |
| DRAWN: | ALK | | | $REV2 | |
| CHECKED: | DM | | | $REV1 | |
| APPROVED: | | NO. | BY | DATE | DESCRIPTION |
| DATE: 01/22/2021 | | REVISIONS | | | |

CDOT CHICAGO DEPARTMENT OF TRANSPORTATION

C*NECT

PAVEMENT MARKING AND SIGNING
EXISTING & PROPOSED CONDITIONS
S. LAKE SHORE DR.

JACKSON PARK MOBILITY IMPROVEMENTS

STA. 162+60 TO STA. 164+14

| | | | |
|---|---|---|---|
| CONTRACT NO. - | TOTAL SHEETS | SHEET NO. |
| PROJECT NO. B-7-203 | 1434 | 754 |
| SCALE: 1"=20' | DRAWING NO. PMK-65 | |

PLOT DATE: 2/15/2021
PLOT SCALE: 40.0000 ' / in.
FILE NAME: pw:\\civil-pw-int.civiltech.local:Civiltech Projects\Documents\Projects\3153\CAD\Sheets\PMK\sht-pmk-s-065.dgn

## EXISTING CONDITIONS

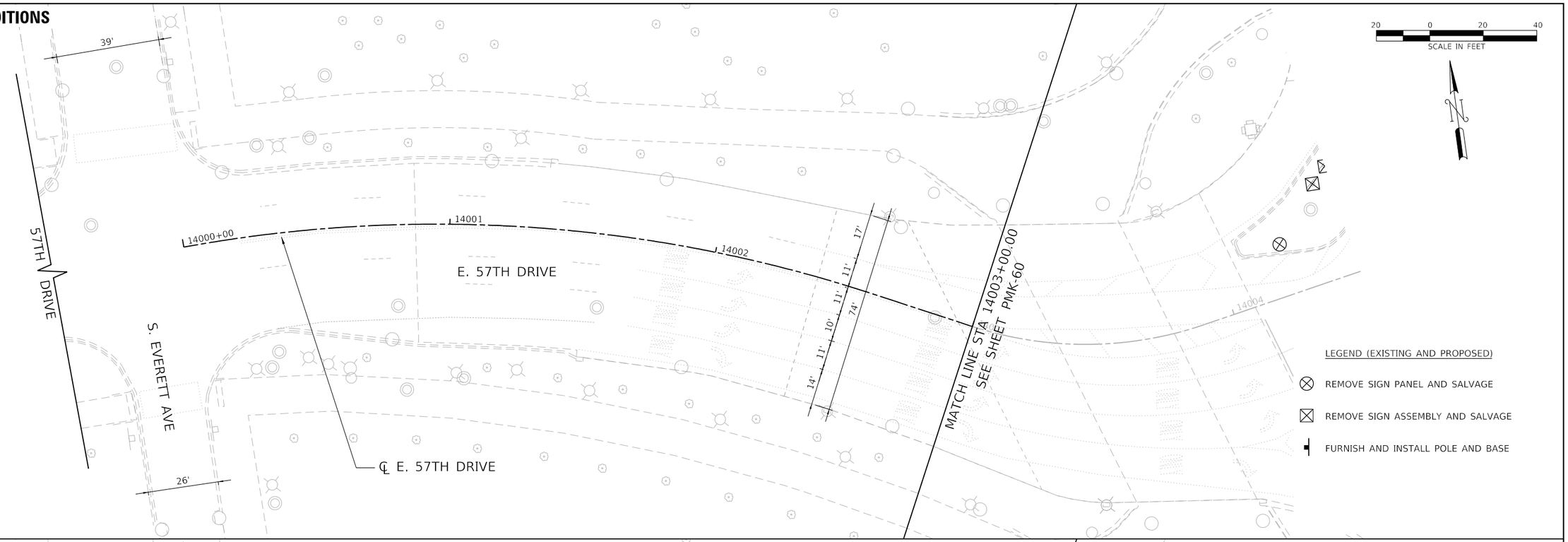


## PROPOSED CONDITIONS

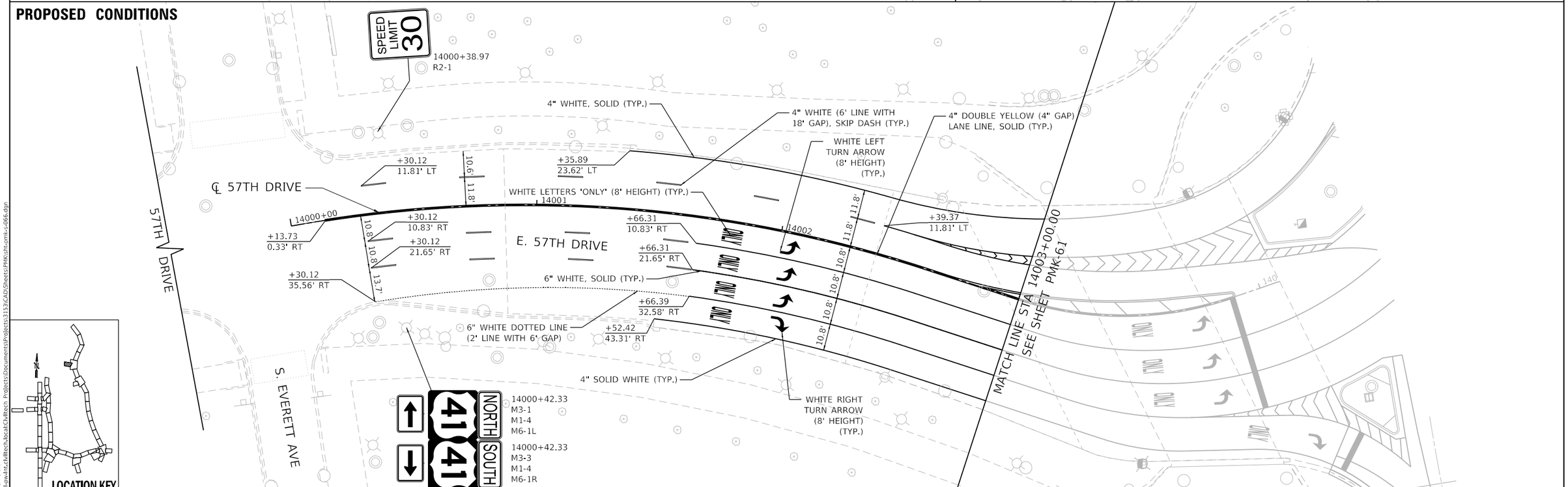


| | | | | | |
|---|---|---|---|---|---|
| DESIGN: | MG | | | SREV3 | |
| DRAWN: | MG | | | SREV2 | |
| CHECKED: | DM | | | SREV1 | |
| APPROVED: | | NO. | BY | DATE | DESCRIPTION |
| DATE: 01/22/2021 | | REVISIONS | | | |

CDOT CHICAGO DEPARTMENT OF TRANSPORTATION

C*NECT

PAVEMENT MARKING AND SIGNING
EXISTING & PROPOSED CONDITIONS
E. 57TH ST.

JACKSON PARK MOBILITY IMPROVEMENTS

STA. 9700+00 TO STA. 9702+50

| | | |
|---|---|---|
| CONTRACT NO. - | TOTAL SHEETS 1434 | SHEET NO. 755 |
| PROJECT NO. B-7-203 | DRAWING NO. PMK-66 | |
| SCALE: 1"=20' | | |

PLOT DATE: 2/15/2021
PLOT SCALE: 40.0000 ' / in.
FILE NAME: pw:\\civil-pw-int.civiltech.local:Civiltech Projects\Documents\Projects\3153\CAD\Sheets\PMK\sht-pmk-s-066.dgn

## EXISTING CONDITIONS

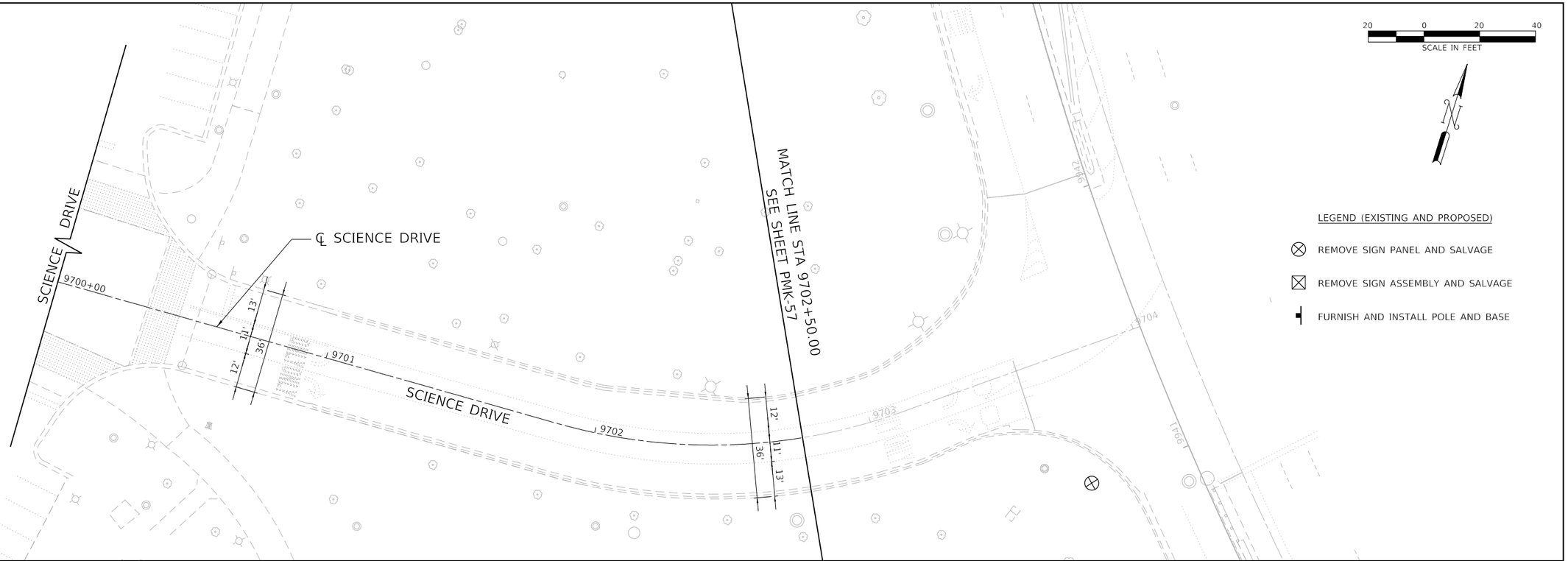


## PROPOSED CONDITIONS

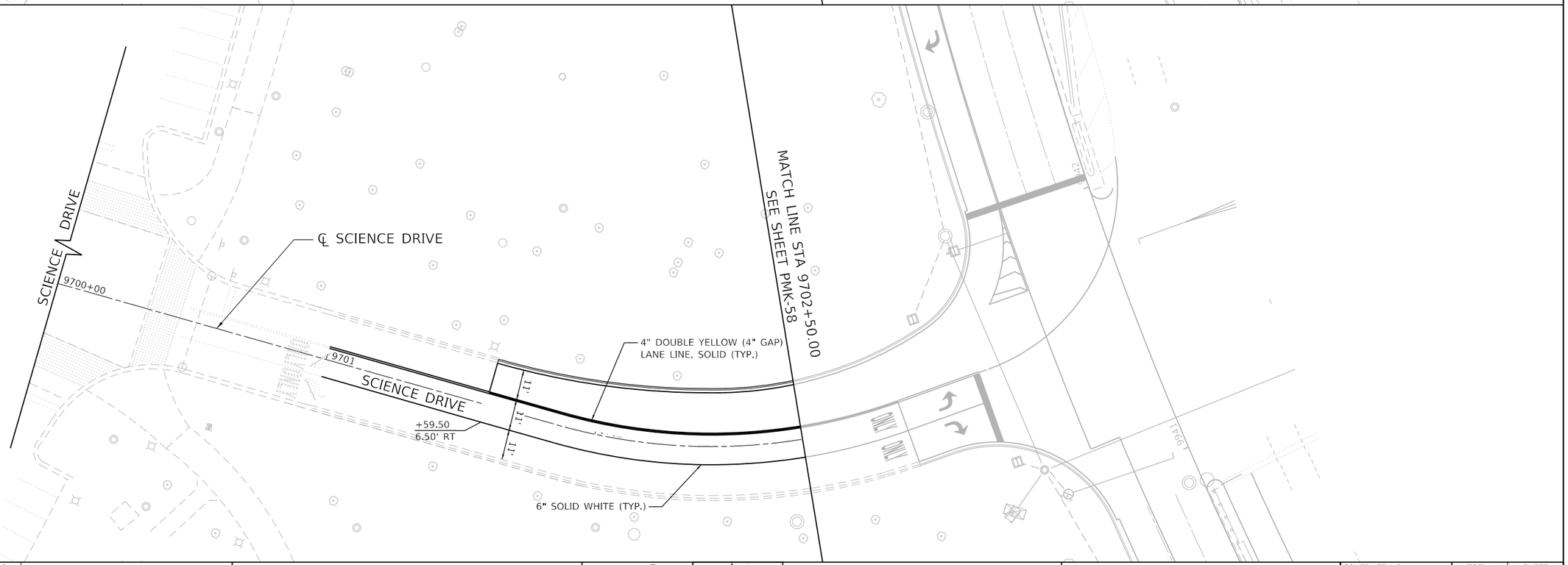


LOCATION KEY

| | | | | | |
|---|---|---|---|---|---|
| DESIGN: MG | | | | $REV3 | |
| DRAWN: MG | | | | $REV2 | |
| CHECKED: DM | | | | $REV1 | |
| APPROVED: | NO. | BY | DATE | DESCRIPTION | |
| DATE: 01/22/2021 | REVISIONS | | | | |

CDOT CHICAGO DEPARTMENT OF TRANSPORTATION

C*NECT

**PAVEMENT MARKING AND SIGNING**
**EXISTING & PROPOSED CONDITIONS**
**E. SCIENCE DR.**

**JACKSON PARK MOBILITY IMPROVEMENTS**

STA. 14000+00 TO STA. 14004+00

| | |
|---|---|
| CONTRACT NO. - | TOTAL SHEETS 1434 / SHEET NO. 756 |
| PROJECT NO. B-7-203 | DRAWING NO. PMK-67 |
| SCALE: 1"=20' | |

PLOT DATE: 2/15/2021
PLOT SCALE: 40.0000 ' / in.
FILE NAME: pw:\cdot-pw-int.civiltech.local\civiltech Projects\Documents\Projects\3153\CAD\Sheets\PMK\cht-conk-s-067.dgn

# EXISTING CONDITIONS

20 0 20 40
SCALE IN FEET

E. HAYES DRIVE

5024

5025+00

5026

Sta 524+53.29
*SPECIAL(PAY FOR PARKING)

Sta 524+42.52
R7-1101

Sta 526+11.11
*SPECIAL(PAY FOR PARKING)
*CPD(BOAT PARKING)

Sta 526+58.54
*SPECIAL(PAY FOR PARKING)
*SPECIAL(PARKING)

Sta 526+68.53
*PARKING MACHINE

9904

9903

9902

US 41 (LAKE SHORE DRIVE)

LEGEND (EXISTING AND PROPOSED)

- REMOVE SIGN PANEL AND SALVAGE
- REMOVE SIGN ASSEMBLY AND SALVAGE
- FURNISH AND INSTALL POLE AND BASE

LOCATION KEY

PLOT DATE: 2/15/2021
PLOT SCALE: 40.0000 ' / in.
FILE NAME: pw:\cdot-pw-int.civiltech.local:CivilTech Projects\Documents\Projects\3153\CADSheets\PMK\cht-comk-s-068.dgn

| | | | | |
|---|---|---|---|---|
| DESIGN: IMU | | | | |
| DRAWN: IMU | | | | |
| CHECKED: DM | | | | |
| APPROVED: | NO. | BY | DATE | DESCRIPTION |
| DATE: 01/22/2021 | REVISIONS | | | |

CDOT CHICAGO DEPARTMENT OF TRANSPORTATION

C*NECT

PAVEMENT MARKING AND SIGNING
EXISTING CONDITIONS
BOAT LAUNCH PARKING LOT

JACKSON PARK MOBILITY IMPROVEMENTS

STA. TO STA.

| | |
|---|---|
| CONTRACT NO. - | TOTAL SHEETS 1434 / SHEET NO. 757 |
| PROJECT NO. B-7-203 | DRAWING NO. PMK-68 |
| SCALE: 1"=20' | |

## PROPOSED CONDITIONS

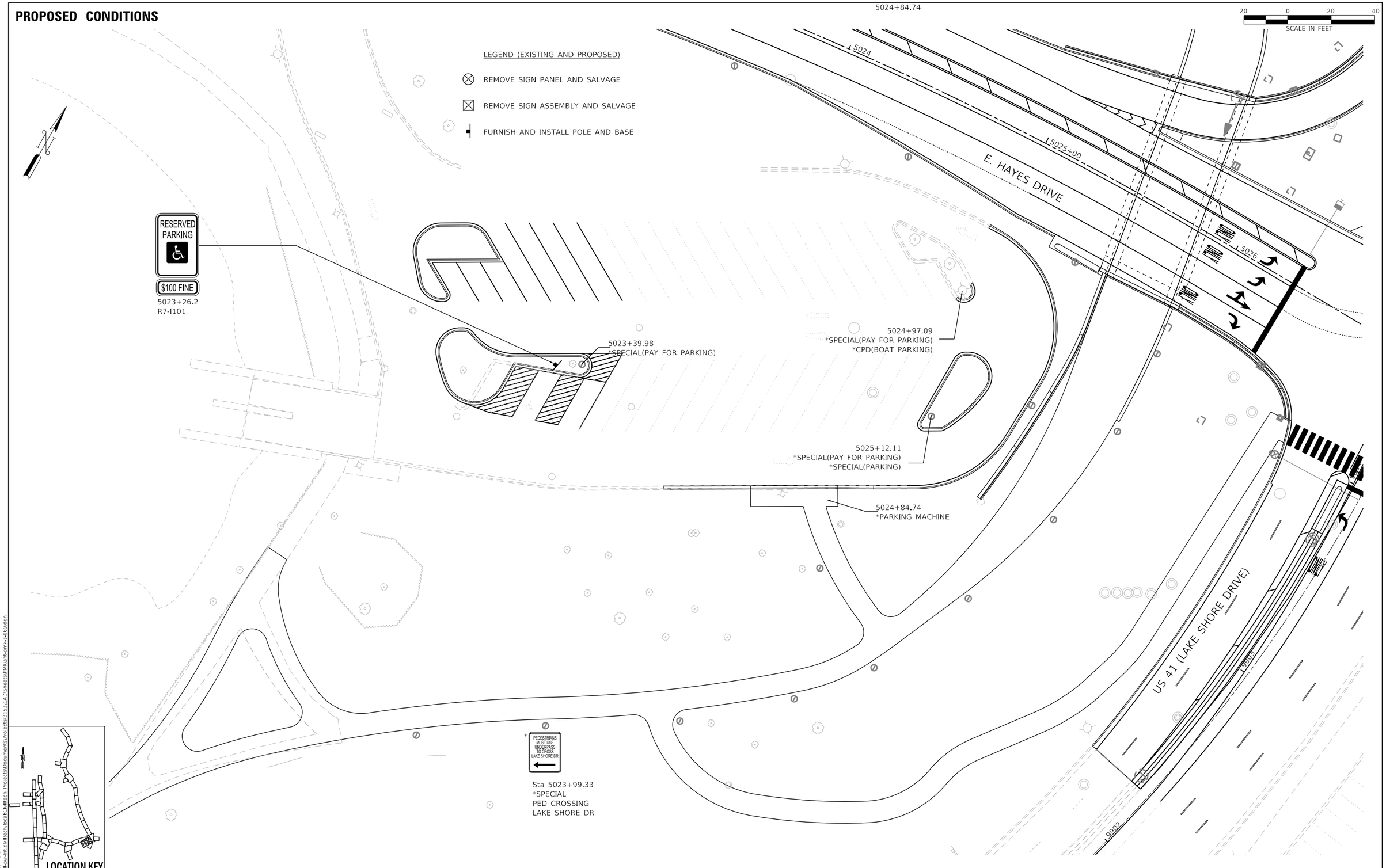


| | | | | |
|---|---|---|---|---|
| DESIGN: IMU | | | | |
| DRAWN: IMU | | | | |
| CHECKED: DM | | | | |
| APPROVED: | NO. | BY | DATE | DESCRIPTION |
| DATE: 01/22/2021 | REVISIONS | | | |

CDOT CHICAGO DEPARTMENT OF TRANSPORTATION

C*NECT

PAVEMENT MARKING AND SIGNING
PROPOSED CONDITIONS
BOAT LAUNCH PARKING LOT

JACKSON PARK MOBILITY IMPROVEMENTS

STA. TO STA.

| | | |
|---|---|---|
| CONTRACT NO. - | TOTAL SHEETS 1434 | SHEET NO. 758 |
| PROJECT NO. B-7-203 | DRAWING NO. PMK-69 | |
| SCALE: 1"=20' | | |

PLOT DATE: 2/15/2021
PLOT SCALE: 40.0000 ' / in.
FILE NAME: pw:\\civil-pw-int.civiltech.local:Civiltech Projects\Documents\Projects\3153\CAD\Sheets\PMK\sht-pmk-s-069.dgn

## STANDARD SIGNS




M1-1
INTERSTATE 90
24" x 24"
REFLECTIVE, SINGLE SIDED
QTY: 9




M1-4
US ROUTE 41
24" x 24"
REFLECTIVE, SINGLE SIDED
QTY: 10




M3-1
NORTH
24" x 12"
REFLECTIVE, SINGLE SIDED
QTY: 2




M3-2
EAST
24" x 12"
REFLECTIVE, SINGLE SIDED
QTY: 9




M3-3
SOUTH WAYFINDING
24" x 12"
REFLECTIVE, SINGLE SIDED
QTY: 3




M4-5
TO
24" x 12"
REFLECTIVE, SINGLE SIDED
QTY: 11




M4-15
TOLL
24" x 12"
REFLECTIVE, SINGLE SIDED
QTY: 9



M5-1L
LEFT TURN ARROW
21" x 15"
REFLECTIVE, SINGLE SIDED
QTY: 2



M5-1R
RIGHT TURN ARROW
21" x 15"
REFLECTIVE, SINGLE SIDED
QTY: 1




M5-6
RIGHT LANE
24" x 18"
REFLECTIVE, SINGLE SIDED
QTY: 1



M6-1L
LEFT ARROW
21" x 15"
REFLECTIVE, SINGLE SIDED
QTY: 2



M6-1R
RIGHT ARROW
21" x 15"
REFLECTIVE, SINGLE SIDED
QTY: 3

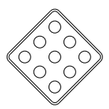

OM1-1
TYPE 1 OBJECT MARKER
18" x 18"
REFLECTIVE, SINGLE SIDED
QTY: 5



R4-7
KEEP RIGHT
24" x 30"
REFLECTIVE, SINGLE SIDED
QTY: 5




R5-1
DO NOT ENTER
30" x 30"
REFLECTIVE, SINGLE SIDED
QTY: 2




R1-1
STOP SIGN
30" x 30"
REFLECTIVE, SINGLE SIDED
QTY: 6




R2-1
SPEED LIMIT
30" x 36"
REFLECTIVE, SINGLE SIDED
QTY: 6



R3-1
NO RIGHT TURN
36" x 36"
REFLECTIVE, SINGLE SIDED
QTY: 2



R3-2
NO LEFT TURN
36" x 36"
REFLECTIVE, SINGLE SIDED
QTY: 3




SS-2
NO PEDDLING ALLOWED
18" x 18"
REFLECTIVE, SINGLE SIDED
QTY: 1



R5-2
NO TRUCKS ALLOWED
24" x 24"
REFLECTIVE, SINGLE SIDED
QTY: 3




R6-2L
ONE WAY, LEFT
18" x 24"
REFLECTIVE, SINGLE SIDED
QTY: 1




R6-2R
ONE WAY, RIGHT
18" x 24"
REFLECTIVE, SINGLE SIDED
QTY: 3




R10-11B
NO TURN ON RED
36" x 36"
REFLECTIVE, SINGLE SIDED
QTY: 3




R7-210-1
NO PARKING WHEN SNOW
IS OVER 2 INCHES, TOW ZONE
18" x 18"
REFLECTIVE, SINGLE SIDED
QTY: 3




R10-3
PUSH BUTTON FOR
PEDESTRIAN SIGNAL
9" x 12"
REFLECTIVE, SINGLE SIDED
QTY: 46



W1-2
CURVE SIGN, 45°, RIGHT ARROW
36" x 36"
REFLECTIVE, SINGLE SIDED
QTY: 1



W1-8
CHEVRON ALIGNMENT, RIGHT
18" x 24"
REFLECTIVE, SINGLE SIDED
QTY: 5



W4-3
MERGING TRAFFIC FROM RIGHT
36" x 36"
REFLECTIVE, SINGLE SIDED
QTY: 1



W8-5
SLIPPERY WHEN WET
36" x 36"
REFLECTIVE, SINGLE SIDED
QTY: 1




W13-1P
ADVISORY SPEED LIMIT, 15 MPH
18" x 18"
REFLECTIVE, SINGLE SIDED
QTY: 1




W14-2
NO OUTLET
36" x 36"
REFLECTIVE, SINGLE SIDED
QTY: 1




W17-1
SPEED HUMP AHEAD
24" x 24"
REFLECTIVE, SINGLE SIDED
QTY: 1




R7-I101
RESERVED PARKING, HANDICAP
$100 FINE
12" x 24"
REFLECTIVE, SINGLE SIDED
QTY: 1

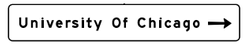


D1-1
UNIVERSITY OF CHICAGO
RIGHT ARROW
9" x 18"
REFLECTIVE, SINGLE SIDED
QTY: 1




D1-2B
BICYCLE WAYFINDING SIGN
VARIES x 30"
(SEE SHEETS FOR EXACT LAYOUT)
REFLECTIVE, SINGLE SIDED
QTY: 7



W11-2
PEDESTRIAN CROSSING
30" x 30"
REFLECTIVE, SINGLE SIDED
QTY: 7



W16-7PL
PEDESTRIAN CROSSING
LEFT ARROW
24" x 12"
REFLECTIVE, SINGLE SIDED
QTY: 6



W16-7PR
PEDESTRIAN CROSSING
RIGHT ARROW
24" x 12"
REFLECTIVE, SINGLE SIDED
QTY: 2




W16-9P
AHEAD
24" x 12"
REFLECTIVE, SINGLE SIDED
QTY: 2




W11-2-6
SENIOR CITIZENS
18" x 24"
REFLECTIVE, SINGLE SIDED
QTY: 1



S1-1
SCHOOL ZONE
PEDESTRIAN CROSSING
36" x 36"
REFLECTIVE, SINGLE SIDED
QTY: 4




S4-3P/ R2-1/ S4-2P
36" x 48"
SCHOOL ZONE
SPEED LIMIT
WHEN CHILDREN ARE PRESENT
REFLECTIVE, SINGLE SIDED
QTY: 6




S5-2
END SCHOOL ZONE
24" x 30"
REFLECTIVE, SINGLE SIDED
QTY: 2




R7-207-1
NO PARKING, BUS STOP
TOW ZONE, RIGHT ARROW
18" x 18"
REFLECTIVE, SINGLE SIDED
QTY: 8




R7-207-3
NO PARKING, BUS STOP
TOW ZONE, LEFT ARROW
18" x 18"
REFLECTIVE, SINGLE SIDED
QTY: 2




R7-207-4
NO PARKING, BUS STOP
TOW ZONE
18" x 18"
REFLECTIVE, SINGLE SIDED
QTY: 3




CTA BUS STOP
(TO BE RELOCATED BY OTHERS)
18" x 24"
REFLECTIVE, DOUBLE SIDED
QTY: 13




R7-1-1
NO PARKING, TOW ZONE
RIGHT ARROW
18" x 18"
REFLECTIVE, SINGLE SIDED
QTY: 6




R7-1-3
NO PARKING, TOW ZONE
LEFT ARROW
18" x 18"
REFLECTIVE, SINGLE SIDED
QTY: 11




R7-1-4
NO PARKING, TOW ZONE
18" x 18"
REFLECTIVE, SINGLE SIDED
QTY: 20




R7-401-4
NO PARKING, TOW ZONE
NO STOPPING, NO STANDING
18" x 18"
REFLECTIVE, SINGLE SIDED
QTY: 3




R7-9-1
NO PARKING, TOW ZONE
RIGHT ARROW
SCHOOL DAYS (HOURS)
18" x 18"
REFLECTIVE, SINGLE SIDED
QTY: 1




R7-9-3
NO PARKING, TOW ZONE
LEFT ARROW
SCHOOL DAYS (HOURS)
18" x 18"
REFLECTIVE, SINGLE SIDED
QTY: 1




R7-9-4
NO PARKING, TOW ZONE
SCHOOL DAYS (HOURS)
18" x 18"
REFLECTIVE, SINGLE SIDED
QTY: 1




R7-202-1
NO PARKING, TOW ZONE
RIGHT ARROW
EMERGENCY USE ONLY
18" x 18"
REFLECTIVE, SINGLE SIDED
QTY: 1




R7-202-3
NO PARKING, TOW ZONE
LEFT ARROW
EMERGENCY USE ONLY
18" x 18"
REFLECTIVE, SINGLE SIDED
QTY: 1

## SPECIAL SIGNS




*SPECIAL
LEFT TURN VERTICAL
CLEARANCE, 12'-0"
(24x24)
NON-REFLECTIVE, SINGLE SIDED
QTY: 2




*SPECIAL
RIGHT TURN VERTICAL
CLEARANCE, 12'-0"
(24x24)
NON-REFLECTIVE, SINGLE SIDED
QTY: 2




*SPECIAL
RIGHT TURN VERTICAL
CLEARANCE, 12'-2"
(24x24)
NON-REFLECTIVE, SINGLE SIDED
QTY: 1




*SPECIAL
UNIVERSITY OF CHICAGO
HOSPITAL, LEFT ARROW
(18x18)
NON-REFLECTIVE, SINGLE SIDED
QTY: 2




*SPECIAL
PEDESTRIANS MUST USE
UNDERPASS TO CROSS
(24x24)
NON-REFLECTIVE, SINGLE SIDED
QTY: 7




*SPECIAL
SAFE SCHOOL ZONE
(24x24)
NON-REFLECTIVE, SINGLE SIDED
QTY: 2




*SPECIAL
WEIGHT LIMIT
(24x36)
NON-REFLECTIVE, SINGLE SIDED
QTY: 2




*SPECIAL
UGO SHUTTLE STOP
(18x18)
NON-REFLECTIVE, DOUBLE SIDED
QTY: 2




*SPECIAL
HAYES DRIVE
(36x48)
REFLECTIVE, SINGLE SIDED
QTY: 1




*SPECIAL
HAYES DRIVE
(60x48)
REFLECTIVE, SINGLE SIDED
QTY: 1




*SPECIAL
PARKING RIGHT ARROW
(24x24)
REFLECTIVE, SINGLE SIDED
QTY: 1




*SPECIAL
LAKE SHORE DRIVE
(18x36)
REFLECTIVE, SINGLE SIDED
QTY: 1




*SPECIAL
CHICAGO SKYWAY
TO INDIANA
(30x30)
REFLECTIVE, SINGLE SIDED
QTY: 8




*CPD
PARK CLOSES 11PM
(24x24)
NON-REFLECTIVE, SINGLE SIDED
QTY: 8

PLOT DATE: 2/15/2021
PLOT SCALE: 40.0000 ' / in.
FILE NAME: pw:\cdot-pw-int.bentleycloud.com:CDOT-Int-Prod-Projects\Projects\3153\CADSheets\PMK\cht-comk-signdet-001.dgn

| | | | | | |
|---|---|---|---|---|---|
| DESIGN: MG | | | | | |
| DRAWN: MG | | | | | |
| CHECKED: DM | | | | | |
| APPROVED: | NO. | BY | DATE | DESCRIPTION | |
| DATE: 01/22/2021 | REVISIONS | | | | |

CDOT CHICAGO DEPARTMENT OF TRANSPORTATION

C*NECT

**PAVEMENT MARKING AND SIGNING**
**SIGN DETAILS**

**JACKSON PARK MOBILITY IMPROVEMENTS**

STA. TO STA.

| | | |
|---|---|---|
| CONTRACT NO. - | TOTAL SHEETS 1434 | SHEET NO. 759 |
| PROJECT NO. B-7-203 | DRAWING NO. PMK-70 | |
| SCALE: 1"=20' | | |

## STREET NAMES

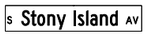


D3-1
STONY ISLAND
36 x 6¾"
STREET NAME, FLAG MOUNT
QTY: 5

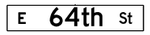


D3-1
64TH STREET
36 x 6¾"
STREET NAME, FLAG MOUNT
QTY: 1

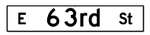


D3-1
62ND STREET
36 x 6¾"
STREET NAME, FLAG MOUNT
QTY: 1

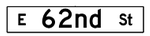


D3-1
62ND STREET
36 x 6¾"
STREET NAME, FLAG MOUNT
QTY: 2

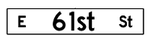


D3-1
61ST STREET
36 x 6¾"
STREET NAME, FLAG MOUNT
QTY: 1

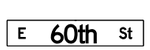


D3-1
60TH STREET
36 x 6¾"
STREET NAME, FLAG MOUNT
QTY: 1




D3-1
HONORARY
CHOSEN FEW D.J.'S WAY
36 x 6¾"
STREET NAME, FLAG MOUNT
QTY: 6




D3-1
HONORARY
HERB KENT DRIVE (THE KOOL GENT)
36 x 6¾"
STREET NAME, FLAG MOUNT
QTY: 5




D3-1
HONORARY
CARMELITE WAY
36 x 6¾"
STREET NAME, FLAG MOUNT
QTY: 1




D3-1
HONORARY
LEON M. DESPRES WAY
36 x 6¾"
STREET NAME, FLAG MOUNT
QTY: 1




D3-2
STONY ISLAND AVENUE
66" x 18"
STREET NAME, MAST ARM MOUNT
QTY: 5




D3-2
LAKE SHORE DRIVE
66" x 18"
STREET NAME, MAST ARM MOUNT
QTY: 4




D3-2
MIDWAY PLAISANCE
60" x 18"
STREET NAME, MAST ARM MOUNT
QTY: 2




D3-2
MIDWAY PLAISANCE
60" x 18"
STREET NAME, MAST ARM MOUNT
QTY: 2

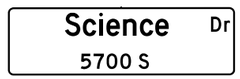


D3-2
SCIENCE DRIVE
60" x 18"
STREET NAME, MAST ARM MOUNT
QTY: 2




D3-2
RICHARDS DRIVE
54" x 18"
STREET NAME, MAST ARM MOUNT
QTY: 2




D3-2
HAYES DRIVE
48" x 18"
STREET NAME, MAST ARM MOUNT
QTY: 3




D3-2
HAYES DRIVE, LEFT ARROW
CORNELL DRIVE, RIGHT ARROW
60" x 18"
STREET NAME, MAST ARM MOUNT
QTY: 1

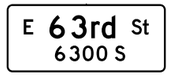


D3-2
63RD STREET
42" x 18"
STREET NAME, MAST ARM MOUNT
QTY: 4

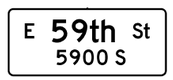


D3-2
59TH STREET
42" x 18"
STREET NAME, MAST ARM MOUNT
QTY: 1

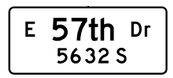


D3-2
57TH STREET
42" x 18"
STREET NAME, MAST ARM MOUNT
QTY: 1

PLOT DATE: 2/15/2021
PLOT SCALE: 40.0000 ' / in.
FILE NAME: pw:\cdot-pw-int.civiltech.local\Civiltech Projects\Documents\Projects\3153\CAD\Sheets\PMK\plt-pmk-signplot-002.dgn

| DESIGN: MG | | | | |
|---|---|---|---|---|
| DRAWN: MG | | | | |
| CHECKED: DM | | | | |
| APPROVED: | NO. | BY | DATE | DESCRIPTION |
| DATE: 01/22/2021 | REVISIONS | | | |

CDOT CHICAGO DEPARTMENT OF TRANSPORTATION

C*NECT

PAVEMENT MARKING AND SIGNING
SIGN DETAILS

JACKSON PARK MOBILITY IMPROVEMENTS

STA. TO STA.

| CONTRACT NO. - | TOTAL SHEETS | SHEET NO. |
|---|---|---|
| PROJECT NO. B-7-203 | 1434 | 760 |
| SCALE: 1"=20' | DRAWING NO. PMK-71 | |

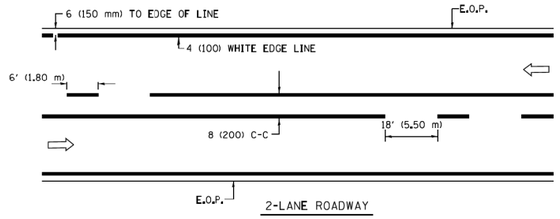


2-LANE ROADWAY

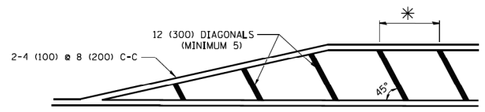


* FOR MEDIAN LENGTHS WHERE DIAGONAL SPACING CANNOT BE ATTAINED, USE 5 (FIVE) EQUALLY SPACED DIAGONAL LINES.

* DIAGONAL LINE SPACING: 20' (6.1 m) C-C

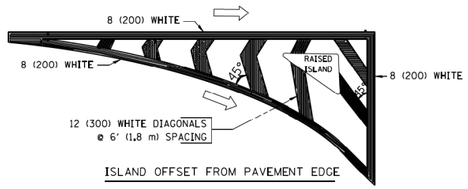


ISLAND OFFSET FROM PAVEMENT EDGE

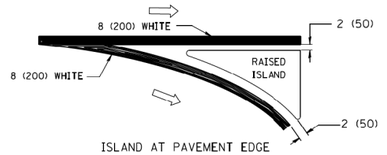


ISLAND AT PAVEMENT EDGE

## TYPICAL ISLAND MARKING

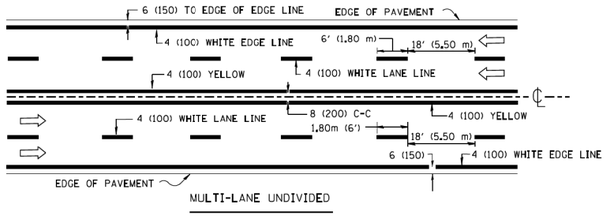


MULTI-LANE UNDIVIDED

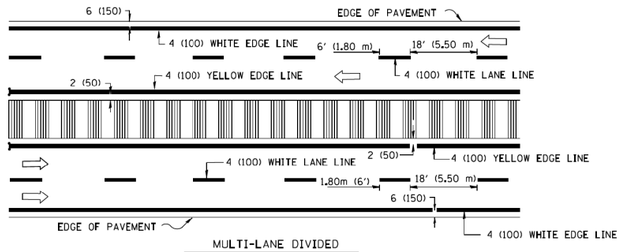


MULTI-LANE DIVIDED
WITH MOUNTABLE MEDIAN

NOTE: MEDIANS WITH BARRIER CURB DO NOT REQUIRE AN EDGE LINE

## TYPICAL LANE AND EDGE LINE MARKING

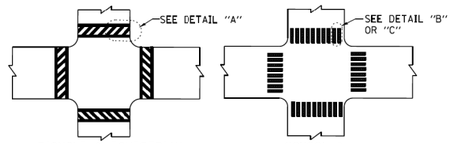


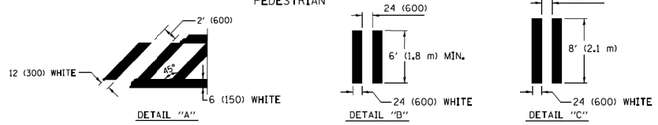


## TYPICAL CROSSWALK MARKING

PAINTED MEDIANS

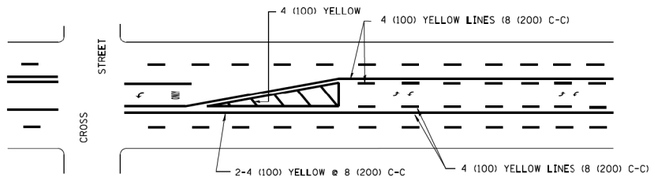


A MINIMUM OF TWO PAIRS OF TURN ARROWS SHALL BE USED. WHITE IN COLOR. ADDITIONAL PAIRS SHALL BE PLACED AT 200' (60 m) TO 300' (90 m) INTERVALS.

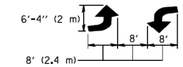


MEDIAN WITH TWO-WAY LEFT TURN LANE

## TYPICAL PAINTED MEDIAN MARKING

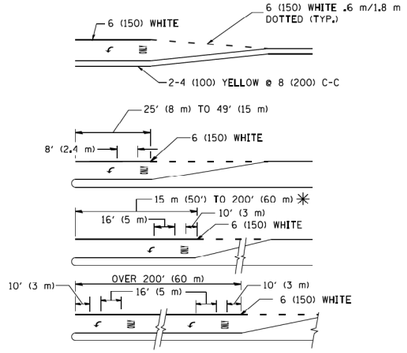


FULL SIZE LETTERS 8' (2.4 m) AND ARROWS SHALL BE USED.
AREA = 15.8 SQ. FT. (1.47 m²) **ONLY** AREA = 22.9 SQ. FT. (2.13 m²)

* TURN LANES IN EXCESS OF 400' (120 m) IN LENGTH MAY HAVE AN ADDITIONAL SET OF ARROW - "ONLY" INSTALLED MIDWAY BETWEEN THE OTHER TWO SETS OF ARROW - "ONLY".

TYPICAL LEFT (OR RIGHT) TURN LANE

## TYPICAL TURN LANE MARKING

| TYPE OF MARKING | WIDTH OF LINE | PATTERN | COLOR | SPACING / REMARKS |
|---|---|---|---|---|
| CENTERLINE ON 2 LANE PAVEMENT | 4 (100) | SKIP-DASH | YELLOW | 6' (1.80 m) LINE WITH 18' (5.50 m) SPACE |
| CENTERLINE ON MULTI-LANE UNDIVIDED PAVEMENT | 2 @ 4 (100) | SOLID | YELLOW | 8 (200) C-C |
| NO PASSING ZONE LINES:<br>FOR ONE DIRECTION<br>FOR BOTH DIRECTIONS | 4 (100)<br>2 @ 4 (100) | SOLID<br>SOLID | YELLOW<br>YELLOW | 8 (200) C-C |
| LANE LINES | 4 (100)<br>5 (125) ON FREEWAYS | SKIP-DASH<br>SKIP-DASH | WHITE<br>WHITE | 6' (1.80 m) LINE WITH 18' (5.50 m) SPACE |
| DOTTED LINES<br>(EXTENSIONS OF CENTER, LANE OR TURN LANE MARKINGS) | SAME AS LINE BEING EXTENDED | SKIP-DASH | SAME AS LINE BEING EXTENDED | 2' (600) LINE WITH 6' (1.8) SPACE |
| EDGE LINES | 4 (100) | SOLID | YELLOW-LEFT<br>WHITE-RIGHT | OUTLINE MOUNTABLE MEDIANS IN YELLOW; EDGE LINES ARE NOT USED NEXT TO BARRIER CURB |
| TURN LANE MARKINGS | 6 (150) LINE; FULL SIZE LETTERS & SYMBOLS (8' (2.4 m)) | SOLID | WHITE | SEE TYPICAL TURN LANE MARKING DETAIL |
| TWO WAY LEFT TURN MARKING | 2 @ 4 (100) EACH DIRECTION<br><br>8' (2.4 m) LEFT ARROW | SKIP-DASH AND SOLID<br><br>IN PAIRS | YELLOW<br><br>WHITE | 6' (1.8 m) LINE WITH 18' (5.50 m) SPACE FOR SKIP-DASH; 8 (200) C-C BETWEEN SOLID LINE AND SKIP-DASH LINE<br><br>SEE TYPICAL TWO-WAY LEFT TURN MARKING DETAIL |
| CROSSWALK LINES<br>A. DIAGONALS (BIKE & EQUESTRIAN)<br>B. LONGITUDINAL BARS (SCHOOL & PEDESTRIAN) | 12 (300) @ 45°<br>24 (600) @ 90° | SOLID<br>SOLID | WHITE<br>WHITE | 2' (600) APART<br>2' (600) APART<br>SEE TYPICAL CROSSWALK MARKING DETAILS. |
| STOP LINES | 24 (600) | SOLID | WHITE | PLACE 4' (1.2 m) IN ADVANCE OF AND PARALLEL TO CROSSWALK, IF PRESENT. OTHERWISE, PLACE AT DESIRED STOPPING POINT. PARALLEL TO CROSSROAD CENTERLINE, WHERE POSSIBLE |
| PAINTED MEDIANS | 2 @ 4 (100) WITH 12 (300) DIAGONALS @ 45° | SOLID | YELLOW: TWO WAY TRAFFIC<br><br>WHITE: ONE WAY TRAFFIC | 8 (200) C-C FOR THE DOUBLE LINE<br><br>SEE TYPICAL PAINTED MEDIAN MARKING. |
| GORE MARKING AND CHANNELIZING LINES | 8 (200) WITH 12 (300) DIAGONALS @ 45° | SOLID | WHITE | DIAGONALS:<br>20' (6.1 m) (LESS THAN 30 MPH (50 km/h)) |
| RAILROAD CROSSING | 24 (600) TRANSVERSE LINES; "RR" IS 6' (1.8 m) LETTERS; 16 (400) LINE FOR "X" | SOLID | WHITE | SEE STATE STANDARD 780001<br>AREA OF:<br>"R"=3.6 SQ. FT. (0.33m²) EACH<br>"X"=54.0 SQ. FT. (5.0 m²) |

FOR FURTHER DETAILS ON PAVEMENT MARKING REFER TO STREET MARKING STANDARDS, PRINTED BY CITY OF CHICAGO, DEPARTMENT OF TRANSPORTATION, BUREAU OF TRAFFIC.

ALL DIMENSIONS ARE IN INCHES (MILLIMETERS) UNLESS OTHERWISE SHOWN.

| | | | |
|---|---|---|---|
| FILE NAME = c:\pw_work\pwidot\drivakosgn\d0188315\tc24.dgn | USER NAME = drivakosgn | DESIGNED - | REVISED - T. RAMMACHER 12-07-00 |
| | | DRAWN - | REVISED - K. ENG 02-28-12 |
| | PLOT SCALE = 50.000 ' / in. | CHECKED - | REVISED - |
| | PLOT DATE = 3/1/2012 | DATE - | REVISED - |

**STATE OF ILLINOIS**
**DEPARTMENT OF TRANSPORTATION**

**CITY OF CHICAGO**
**TYPICAL PAVEMENT MARKINGS**

SCALE: NONE | SHEET NO. 1 OF 3 SHEETS | STA. | TO STA.

| F.A. RTE. | SECTION | COUNTY | TOTAL SHEETS | SHEET NO. |
|---|---|---|---|---|
| | TC-24 | | CONTRACT NO. | |
| FED. ROAD DIST. NO. 1 | ILLINOIS | FED. AID PROJECT | | |

PLOT DATE: 2/15/2021
PLOT SCALE: 40.0000 ' / in.
FILE NAME: pw:\cdot-pwint.cdot.com:Documents\Projects\3153\CADSheets\PMK\ahr-pmk-det-001.dgn

| | | | | |
|---|---|---|---|---|
| DESIGN: MG | | | | |
| DRAWN: MG | | | | |
| CHECKED: DM | | | | |
| APPROVED: | NO. | BY | DATE | DESCRIPTION |
| DATE: 01/22/2021 | REVISIONS | | | |

CHICAGO DEPARTMENT OF TRANSPORTATION

C²NECT

**PAVEMENT MARKING AND SIGNING**
**PAVEMENT MARKING DETAILS**

**JACKSON PARK MOBILITY IMPROVEMENTS**

STA. TO STA.

| | | | |
|---|---|---|---|
| CONTRACT NO. - | | TOTAL SHEETS | SHEET NO. |
| PROJECT NO. B-7-203 | | 1434 | 761 |
| SCALE: 1"=20' | | DRAWING NO. | PMK-72 |

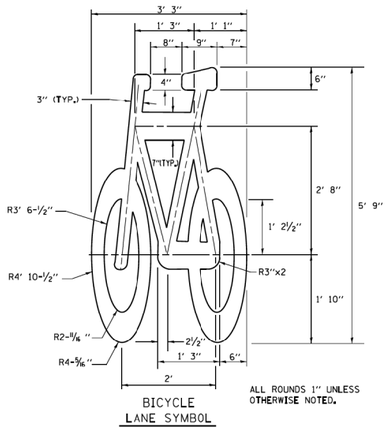


BICYCLE LANE SYMBOL

ALL ROUNDS 1" UNLESS OTHERWISE NOTED.

NOTE:

1.) FOR BIKE LANE SYMBOLS ONLY, USE PRE-FORMED THERMOPLASTIC WITH A MINIMUM THICKNESS OF 90 MILS, MINIMUM SKID RESISTANCE VALUE OF 60 BPN, & A MINIMUM INDEX OF REFRACTION OF 1.50.

2.) THE RESIDENT ENGINEER SHALL CONTACT MR. BEN GOMBERG AT 312-744-8093 AT LEAST ONE CALENDAR WEEK PRIOR TO INSTALLING BIKE LANE SYMBOLS.

## TYPICAL BIKE LANE SYMBOLS
DRAWING #28

DRAWING #29

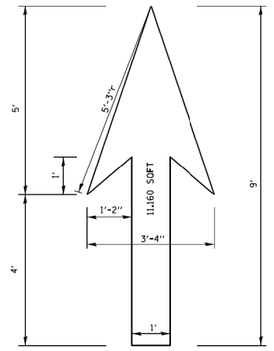


DRAWING #30

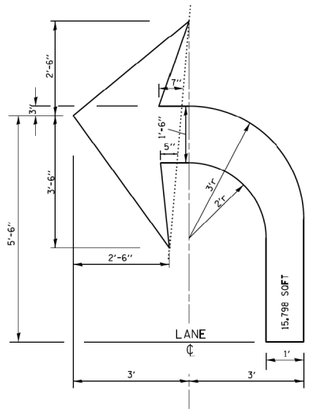


DRAWING #31

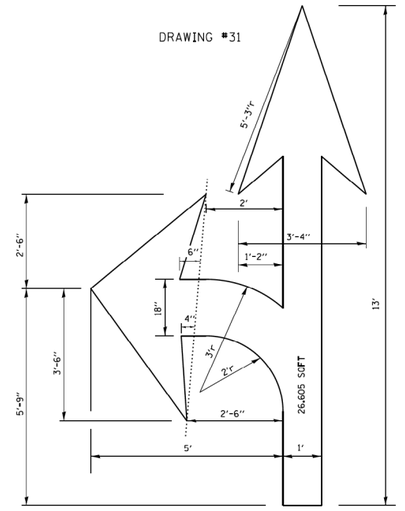


DRAWING #32

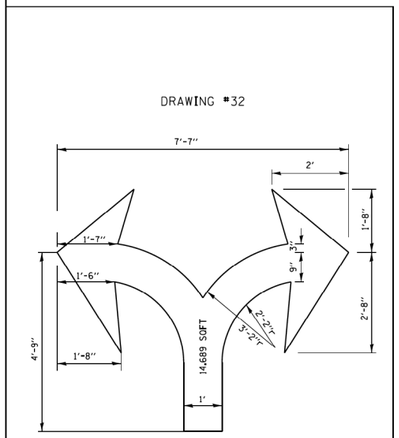


DRAWING #33

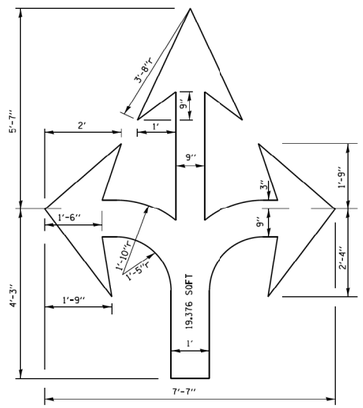


DRAWING #34

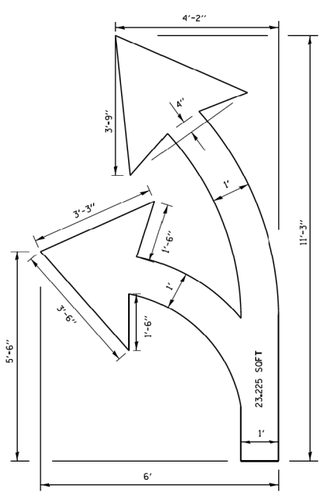


DRAWING #35

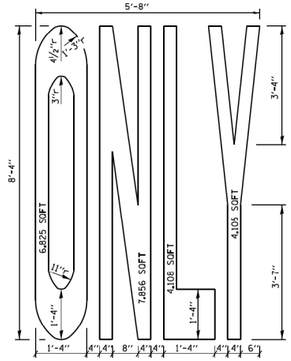


NOTE:
ALL MARKINGS SHALL BE SOLID WHITE UNLESS OTHERWISE NOTED IN THE PLANS

| | | | |
|---|---|---|---|
| FILE NAME = c:\pw_work\pwidot\drivakosgn\d0108315\tc24.dgn | USER NAME = drivakosgn | DESIGNED - | REVISED - T. RAMMACHER 12-07-00 |
| | | DRAWN - | REVISED - K. ENG 02-28-12 |
| | PLOT SCALE = 50.000 ' / in. | CHECKED - | REVISED - |
| | PLOT DATE = 3/29/2012 | DATE - | REVISED - |

**STATE OF ILLINOIS**
**DEPARTMENT OF TRANSPORTATION**

**CITY OF CHICAGO**
**TYPICAL PAVEMENT MARKINGS**

SCALE: NONE | SHEET NO. 2 OF 3 SHEETS | STA. | TO STA.

| F.A. RTE. | SECTION | COUNTY | TOTAL SHEETS | SHEET NO. |
|---|---|---|---|---|
| | | | | |
| | TC-24 | CONTRACT NO. | | |
| FED. ROAD DIST. NO. 1 | ILLINOIS | FED. AID PROJECT | | |

PLOT DATE: 2/15/2021
PLOT SCALE: 40.0000 ' / in.
FILE NAME: pw:\\cdot-sqwdnt.cfv\llitech.local\CivilTech Projects\Documents\Projects\3133\CAD\Sheets\PMK\cht-pmk-det-002.dgn

| | | | | |
|---|---|---|---|---|
| DESIGN: MG | | | | |
| DRAWN: MG | | | | |
| CHECKED: DM | | | | |
| APPROVED: | NO. | BY | DATE | DESCRIPTION |
| DATE: 01/22/2021 | REVISIONS | | | |

CDOT CHICAGO DEPARTMENT OF TRANSPORTATION

C*NECT

**PAVEMENT MARKING AND SIGNING**
**PAVEMENT MARKING DETAILS**

**JACKSON PARK MOBILITY IMPROVEMENTS**

STA. TO STA.

| CONTRACT NO. | TOTAL SHEETS | SHEET NO. |
|---|---|---|
| - | 1434 | 762 |
| PROJECT NO. B-7-203 | DRAWING NO. | |
| SCALE: 1"=20' | PMK-73 | |

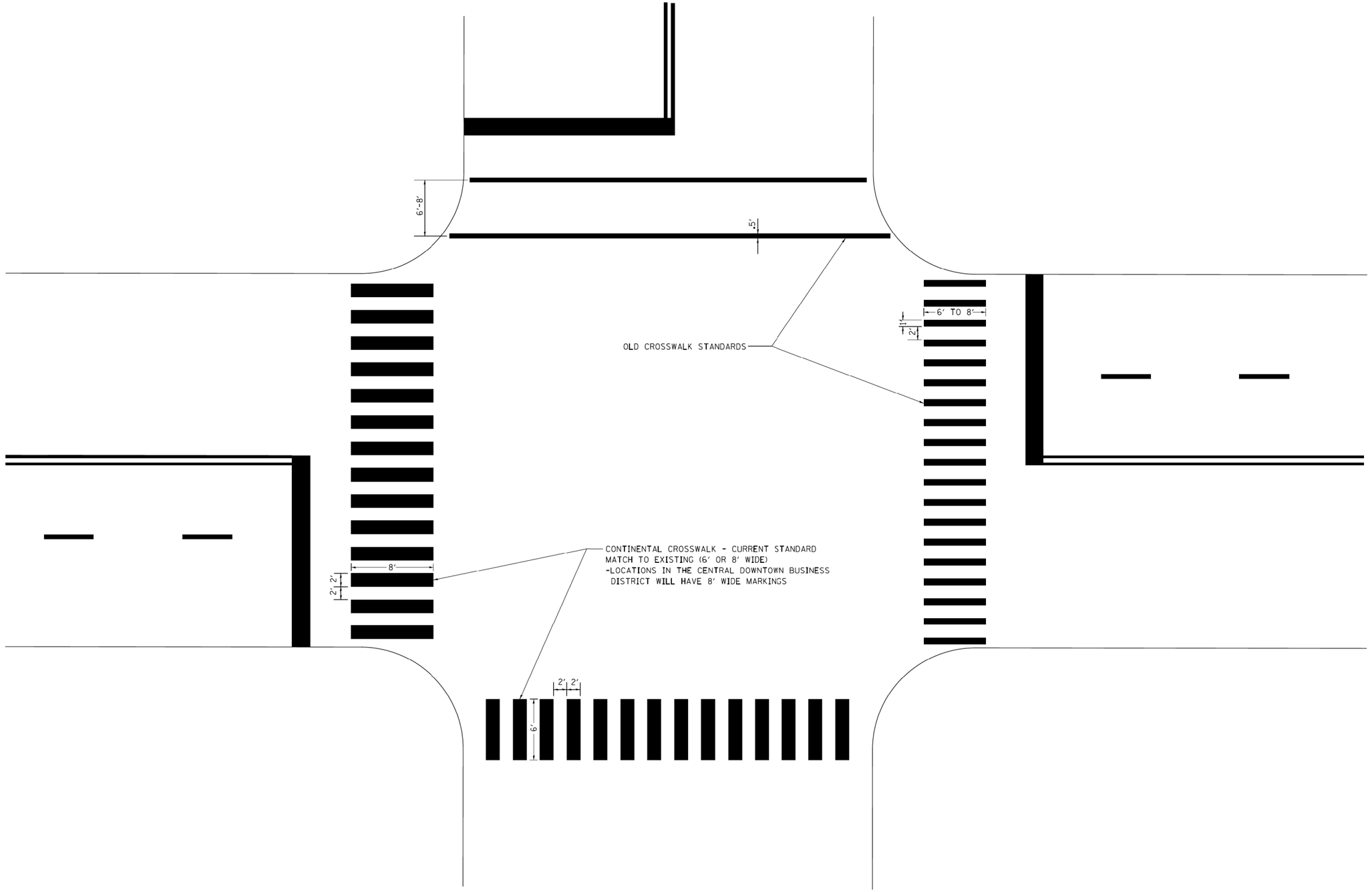


| | | | | | |
|---|---|---|---|---|---|
| FILE NAME = c:\pw_work\pwidot\drivakosgn\d0108315\tc24.dgn | USER NAME = drivakosgn | DESIGNED - | REVISED - T. RAMMACHER 12-07-00 | **STATE OF ILLINOIS DEPARTMENT OF TRANSPORTATION** | **CITY OF CHICAGO** **TYPICAL PAVEMENT MARKINGS** |
| | PLOT SCALE = 50.000 ' / in. | DRAWN - | REVISED - K. ENG 02-28-12 | | SCALE: NONE SHEET NO. 3 OF 3 SHEETS STA. TO STA. |
| | PLOT DATE = 3/29/2012 | CHECKED - | REVISED - | | |
| | | DATE - | REVISED - | | |

| F.A. RTE. | SECTION | COUNTY | TOTAL SHEETS | SHEET NO. |
|---|---|---|---|---|
| | | | | |
| | TC-24 | CONTRACT NO. | | |
| FED. ROAD DIST. NO. 1 | ILLINOIS | FED. AID PROJECT | | |

PLOT DATE: 2/15/2021
PLOT SCALE: 40.0000 ' / in.
FILE NAME: pw:\cdot-pw-int.civiltech.local:CivilTech Projects\Documents\Projects\3153\CADSheets\PMK\int-comk-dot-003.dgn

| | | | | | |
|---|---|---|---|---|---|
| DESIGN: MG | | | | | |
| DRAWN: MG | | | | | |
| CHECKED: DM | | | | | |
| APPROVED: | NO. | BY | DATE | DESCRIPTION | |
| DATE: 01/22/2021 | REVISIONS | | | | |

CDOT CHICAGO DEPARTMENT OF TRANSPORTATION

C*NECT

PAVEMENT MARKING AND SIGNING
PAVEMENT MARKING DETAILS

JACKSON PARK MOBILITY IMPROVEMENTS

STA. TO STA.

| | | |
|---|---|---|
| CONTRACT NO. - | TOTAL SHEETS 1434 | SHEET NO. 763 |
| PROJECT NO. B-7-203 | DRAWING NO. PMK-74 | |
| SCALE: 1"=20' | | |

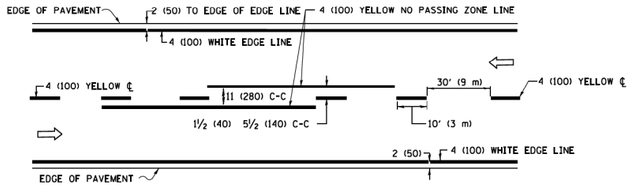


## 2–LANE ROADWAY

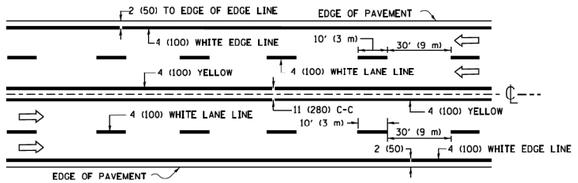


## MULTI–LANE UNDIVIDED

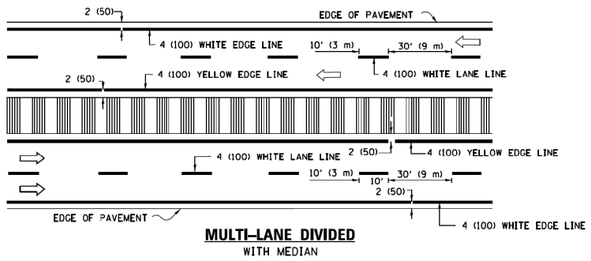


## MULTI–LANE DIVIDED
WITH MEDIAN

## TYPICAL LANE AND EDGE LINE MARKING

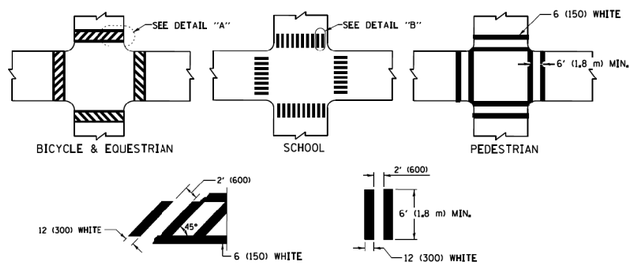


**DETAIL "A"** **DETAIL "B"**

## TYPICAL CROSSWALK MARKING

✳ MARKINGS SHALL BE INSTALLED PARALLEL TO THE CENTERLINE OF THE ROAD WHICH IT CROSSES

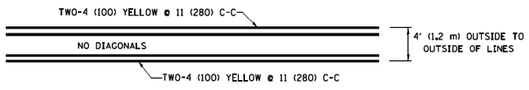


## 4' (1.2 m) WIDE MEDIANS ONLY

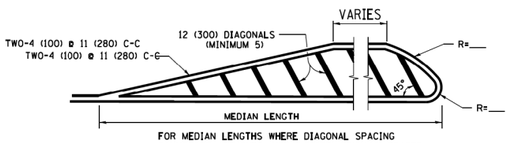


FOR MEDIAN LENGTHS WHERE DIAGONAL SPACING CANNOT BE ATTAINED, USE 5 (FIVE) EQUALLY SPACED DIAGONAL LINES.

DIAGONAL LINE SPACING: 50' (15 m) C-C (LESS THAN 30MPH (50 km/h))
75' (25 m) C-C 30MPH (50 km/h) TO 45MPH (70 km/h))
150' (45 m) C-C (MORE THAN 45MPH (70 km/h))

## MEDIANS OVER 4' (1.2 m) WIDE

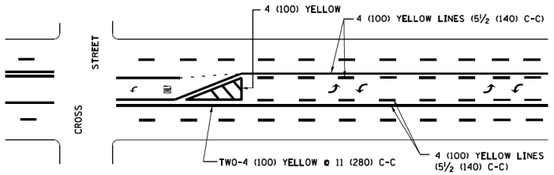


A MINIMUM OF TWO PAIRS OF TURN ARROWS SHALL BE USED, WHITE IN COLOR. ADDITIONAL PAIRS SHALL BE PLACED AT 200' (60 m) TO 300' (90 m) INTERVALS.

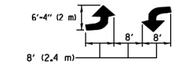


## MEDIAN WITH TWO–WAY LEFT TURN LANE

## TYPICAL PAINTED MEDIAN MARKING

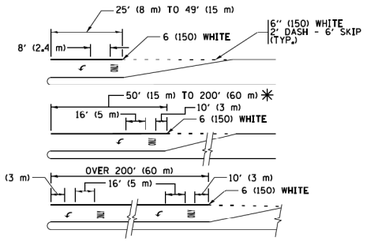


FULL SIZE LETTERS 8' (2,4 m) AND ARROWS SHALL BE USED.
AREA = 15.6 SQ. FT. (1.5 m²) ONLY AREA = 20.8 SQ. FT. (1.9 m²)

✳ TURN LANES IN EXCESS OF 400' (120 m) IN LENGTH MAY HAVE AN ADDITIONAL SET OF ARROW - "ONLY" INSTALLED MIDWAY BETWEEN THE OTHER TWO SETS OF ARROW - "ONLY".

## TYPICAL LEFT (OR RIGHT) TURN LANE

## TYPICAL TURN LANE MARKING

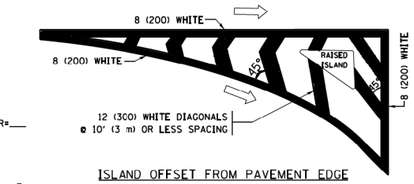


ISLAND OFFSET FROM PAVEMENT EDGE

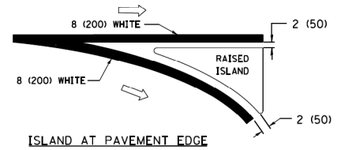


ISLAND AT PAVEMENT EDGE

## TYPICAL ISLAND MARKING

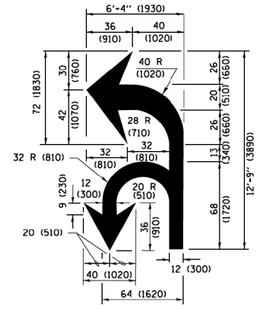


## COMBINATION LEFT AND U–TURN

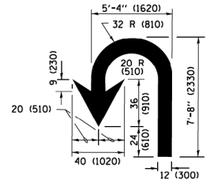


## U–TURN

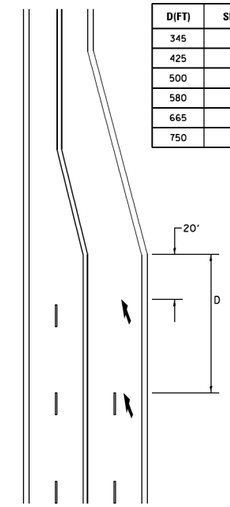


| D(FT) | SPEED LIMIT |
|---|---|
| 345 | 30 |
| 425 | 35 |
| 500 | 40 |
| 580 | 45 |
| 665 | 50 |
| 750 | 55 |

## LANE REDUCTION TRANSITION

✳ LANE REDUCTION ARROWS REQUIRED AT SPEEDS OF 45 MPH OR GREATER OR WHEN SPECIFIED IN PLANS.

| TYPE OF MARKING | WIDTH OF LINE | PATTERN | COLOR | SPACING /REMARKS |
|---|---|---|---|---|
| CENTERLINE ON 2 LANE PAVEMENT | 4 (100) | SKIP-DASH | YELLOW | 10' (3 m) LINE WITH 30' (9 m) SPACE |
| CENTERLINE ON MULTI-LANE UNDIVIDED PAVEMENT | 2 ⌀ 4 (100) | SOLID | YELLOW | 11 (280) C-C |
| NO PASSING ZONE LINES:<br>FOR ONE DIRECTION<br>FOR BOTH DIRECTIONS | 4 (100)<br>2 ⌀ 4 (100) | SOLID<br>SOLID | YELLOW<br>YELLOW | 5½ (140) C-C FROM SKIP-DASH CENTERLINE<br>11 (280) C-C<br>OMIT SKIP-DASH CENTERLINE BETWEEN |
| LANE LINES | 4 (100)<br>5 (125) ON FREEWAYS | SKIP-DASH<br>SKIP-DASH | WHITE<br>WHITE | 10' (3 m) LINE WITH 30' (9 m) SPACE |
| DOTTED LINES<br>(EXTENSIONS OF CENTER, LANE OR TURN LANE MARKINGS) | SAME AS LINE BEING EXTENDED | SKIP-DASH | SAME AS LINE BEING EXTENDED | 2' (600) LINE WITH 6' (1.8 m) SPACE |
| EDGE LINES | 4 (100) | SOLID | YELLOW-LEFT<br>WHITE-RIGHT | OUTLINE MEDIANS IN YELLOW |
| TURN LANE MARKINGS | 6 (150) LINE; FULL SIZE LETTERS & SYMBOLS (8' (2,4m)) | SOLID | WHITE | SEE TYPICAL TURN LANE MARKING DETAIL |
| TWO WAY LEFT TURN MARKING | 2 ⌀ 4 (100)<br>EACH DIRECTION<br><br>8' (2.4m) LEFT ARROW | SKIP-DASH<br>AND SOLID<br>IN PAIRS | YELLOW<br><br><br>WHITE | 10' (3 m) LINE WITH 30' (9 m) SPACE FOR SKIP-DASH; 5½ (140) C-C BETWEEN SOLID LINE AND SKIP-DASH LINE<br>SEE TYPICAL TWO-WAY LEFT TURN MARKING DETAIL |
| CROSSWALK LINES (PEDESTRIAN)<br>A. DIAGONALS (BIKE & EQUESTRIAN)<br>B. LONGITUDINAL BARS (SCHOOL) | 2 ⌀ 6 (150)<br>12 (300) ⌀ 45°<br>12 (300) ⌀ 90° | SOLID<br>SOLID<br>SOLID | WHITE<br>WHITE<br>WHITE | NOT LESS THAN 6' (1.8 m) APART<br>2' (600) APART<br>2' (600) APART<br>SEE TYPICAL CROSSWALK MARKING DETAILS. |
| STOP LINES | 24 (600) | SOLID | WHITE | PLACE 4' (1.2 m) IN ADVANCE OF AND PARALLEL TO CROSSWALK, IF PRESENT. OTHERWISE, PLACE AT DESIRED STOPPING POINT. PARALLEL TO CROSSROAD CENTERLINE, WHERE POSSIBLE |
| PAINTED MEDIANS | 2 ⌀ 4 (100) WITH<br>12 (300) DIAGONALS<br>⌀ 45°<br>NO DIAGONALS USED FOR 4' (1.2 m) WIDE MEDIANS | SOLID | YELLOW:<br>TWO WAY TRAFFIC<br>WHITE:<br>ONE WAY TRAFFIC | 11 (280) C-C FOR THE DOUBLE LINE<br>SEE TYPICAL PAINTED MEDIAN MARKING. |
| GORE MARKING AND CHANNELIZING LINES | 8 (200) WITH 12 (300) DIAGONALS ⌀ 45° | SOLID | WHITE | DIAGONALS:<br>15' (4,5 m) C-C (LESS THAN 30MPH (50 km/h))<br>20' (6 m) C-C 30MPH (50 km/h) TO 45MPH (70 km/h))<br>30' (9 m) C-C (OVER 45MPH (70 km/h)) |
| RAILROAD CROSSING | 24 (600) TRANSVERSE LINES; "RR" IS 6' (1.8 m) LETTERS; 16 (400) LINE FOR "X" | SOLID | WHITE | SEE STATE STANDARD 780001<br>AREA OFs<br>"R"=3.6 SQ. FT. (0.33 m²) EACH<br>"X"=54.0 SQ. FT. (5.0 m²) |
| SHOULDER DIAGONALS (REQUIRED FOR SHOULDERS ≥ 8' ) | 12 (300) ⌀ 45° | SOLID | WHITE - RIGHT<br>YELLOW - LEFT | 50' (15 m) C-C (LESS THAN 30MPH (50 km/h))<br>75' (25 m) C-C (30 MPH (50 km/h) TO 45MPH (70 km/h))<br>150' (45 m) C-C (OVER 45MPH (70 km/h)) |
| U TURN ARROW | SEE DETAIL | SOLID | WHITE | 16.3 SF |
| 2 ARROW COMBINATION<br>LEFT AND U TURN | SEE DETAIL | SOLID | WHITE | 30.4 SF |

FOR FURTHER DETAILS ON PAVEMENT MARKING REFER TO STANDARD SPECIFICATIONS FOR ROAD AND BRIDGE CONSTRUCTION AND STATE STANDARD 780001.

All dimensions are in inches (millimeters) unless otherwise shown.

| | | | |
|---|---|---|---|
| FILE NAME = W:\diststd\22x34\tcl3.dgn | USER NAME = leyes | DESIGNED - EVERS | REVISED - C. JUCIUS 09-09-09 |
| | | DRAWN - | REVISED - C. JUCIUS 07-01-13 |
| | PLOT SCALE = 50.000 ' / in. | CHECKED - | REVISED - C. JUCIUS 12-21-15 |
| Default | PLOT DATE = 6/23/2017 | DATE - 03-19-90 | REVISED - C. JUCIUS 04-12-16 |

**STATE OF ILLINOIS**
**DEPARTMENT OF TRANSPORTATION**

**DISTRICT ONE**
**TYPICAL PAVEMENT MARKINGS**

SCALE: NONE | SHEET 1 OF 1 SHEETS | STA. | TO STA.

| F.A. RTE. | SECTION | COUNTY | TOTAL SHEETS | SHEET NO. |
|---|---|---|---|---|
| | | | | |
| | TC-13 | CONTRACT NO. | | |
| | ILLINOIS FED. AID PROJECT | | | |

PLOT DATE: 2/15/2021
PLOT SCALE: 40.0000 ' / in.
FILE NAME: pw:\\ckh1-pw-4nc.dillitech.local:CivilTech Projects\Documents\Projects\31133\CADD\Sheets\PMK\sht-pmk-det-004.dgn

| | | | | |
|---|---|---|---|---|
| DESIGN: MG | | | | |
| DRAWN: MG | | | | |
| CHECKED: DM | | | | |
| APPROVED: | NO. | BY | DATE | DESCRIPTION |
| DATE: 01/22/2021 | REVISIONS | | | |

CDOT CHICAGO DEPARTMENT OF TRANSPORTATION

C*NECT

PAVEMENT MARKING AND SIGNING
PAVEMENT MARKING DETAILS

JACKSON PARK MOBILITY IMPROVEMENTS

STA. TO STA.

| CONTRACT NO. | TOTAL SHEETS | SHEET NO. |
|---|---|---|
| - | 1434 | 764 |
| PROJECT NO. B-7-203 | DRAWING NO. PMK-75 | |
| SCALE: 1"=20' | | |