City of Chicago Department of Water Management

City of Chicago

Stormwater Management Plan

General NPDES Permit for Discharges from Small Municipal Separate Storm Sewer Systems

January 2018

Table of Contents

1 Purpose 4

2 Acronyms and Abbreviations 4

3 Overview 4

3.1 Background 4

3.2 MS4 Drainage Areas 5

3.3 Receiving Waters 5

3.4 Total Maximum Daily Loads 7

3.5 City Departments' Responsibilities 7

4 Six Minimum Controls 7

4.1 Public Education and Outreach 7

4.1.1 Speaking Engagement 7
4.1.2 Classroom Education Material 8
4.1.3 Other Public Education 8

4.2 Public Participation and Involvement 9

4.2.1 Stakeholder Meetings 9
4.2.2 Program Involvement 9
4.2.3 Other Public Involvement 9

4.3 Illicit Discharge Detection and Elimination 10

4.3.1 Sewer Map Preparation 10
4.3.2 Regulatory Control Program 11
4.3.3 Program Evaluation and Assessment 12
4.3.4 Visual Dry Weather Screening 12
4.3.5 Public Notification 12
4.3.6 Other Illicit Discharge Controls 12

4.4 Construction Site Runoff Control 13

4.4.1 Regulatory Control Program 13
4.4.2 Erosion and Sediment Control BMPs 13
4.4.3 Other Waste Control Program 14
4.4.4 Site Plan Review Procedures 14
4.4.5 Site Inspection and Enforcement Procedures 14
4.4.6 Other Construction Site Runoff Controls 14

4.5 Post-Construction Runoff Control 15

4.5.1 Community Control Strategy 15
4.5.2 Regulatory Control Program 15
4.5.3 Long Term O&M Procedures 15

4.5.4 Pre-Construction Review of BMP Designs 15
4.5.5 Post-Construction Inspections 16

4.6 Pollution Prevention and Good Housekeeping 16
4.6.1 Employee Training Program 16
4.6.2 Inspection and Maintenance Program 16
4.6.3 Municipal Operations Stormwater Control 18
4.6.4 Municipal Operations Waste Disposal 18
4.6.5 Flood Management/Assess Guidelines 19
4.6.6 Other Municipal Operations Controls 19

Figures

Figure 1: MS4 Outfalls and Waterbodies 6
Figure 2: Sewer Lining Construction and Goals 17
Figure 3: Sewer Structure Lining Construction and Goals 17
Figure 4: Sewer Replacement Construction and Goals 18

Tables

Table 1: Space to Grow Schools 8
Table 2: Street Sweeping Totals 19

Appendices

A. Outfall Locations and Waterbodies Maps
B. General NPDES Permit ILR40
C. 2016 Stormwater Management Municipal Code
D. 2016 Regulations for Sewer Construction and Stormwater Management
E. 2016 Stormwater Management Ordinance Manual
F. Chicago Sustainability Development Policy Matrix

1 PURPOSE

The City of Chicago's Department of Water Management (DWM) has prepared this Stormwater Management Plan (SWMP) for its Small Municipal Separate Storm Sewer System (MS4) as required under the General National Pollutant Discharge Elimination System (NPDES) Permit ILR40 from the Illinois Environmental Protection Agency (IEPA). The SWMP and related documentation describe the extent of separate storm sewer systems within the City of Chicago (City), the receiving waters to which these sewers discharge, the City departments responsible for implementation and coordination of stormwater management programs, and the Best Management Practices (BMP) in use and/or planned for implementation to reduce the impacts of separate storm sewer discharges on the quality of area receiving waters.

2 ACRONYMS AND ABBREVIATIONS

2FM	Chicago Department of Fleet and Facility Management
ADA	Americans with Disabilities Act
BFP	Basement Flooding Partnership
BMP	Best Management Practice
CDA	Chicago Department of Aviation
CDOT	Chicago Department of Transportation
City	City of Chicago
CPS	Chicago Public Schools
CSO	Combined Sewer Overflow
DOB	Chicago Department of Buildings
DPH	Chicago Department of Public Health
DSS	Chicago Department of Streets and Sanitation
DWM	Chicago Department of Water Management
GIS	Geographic Information System
IEPA	Illinois Environmental Protection Agency
MS4	Municipal Separate Storm Sewer System
MWRDGC	Metropolitan Water Reclamation District of Greater Chicago
NPDES	National Pollutant Discharge Elimination System
O&M	Operation and Maintenance Plan
O'Hare	Chicago O'Hare International Airport
SOP	Sustainable Operations Plan
SPCC	Spill Prevention, Control, and Countermeasure
SWMP	Stormwater Management Plan
SWPPP	Stormwater Pollution Prevention Plan
TMDL	Total Maximum Daily Load

3 OVERVIEW

3.1 Background

With construction of the sewer system beginning in 1857, the City has one of the oldest sewer networks in the country. The City of Chicago includes a service area that spans approximately 230 square miles and

serves 2.6 million residents. The City's system is primarily a combined sanitary and storm sewer network, but also consists of manholes, catch basins, and sewer mains that transport strictly stormwater. The City strives to reduce the quantity of pollutants that enter the sewer system as outlined in the Six Minimum Controls: Public Education and Outreach, Public Participation and Involvement, Illicit Discharge Detection and Elimination, Construction Site Runoff Control, Post-Construction Runoff Control, and Pollution Prevention and Good Housekeeping.

3.2 MS4 Drainage Areas

As the majority of the City's sewer system is comprised of combined sewage infrastructure, the MS4 drainage areas cover a limited portion of the City's total service area. With MS4 areas comprising a minute portion of the 230 square mile service area, the corresponding sewers generally consist of short segments draining street inlets from a small area near a receiving stream. More significant areas served by separate storm sewers are limited to a small number of major roadways (primarily Lake Shore Drive), and non-industrial discharges at Chicago O'Hare International Airport (O'Hare). Stormwater discharges from industrial areas of O'Hare are regulated by the IEPA under an individual NPDES permit (Permit No. IL0002283) and are not addressed as part of this SWMP. Additionally, the City is only responsible for regulating activities in the City's right-of-way. Thus, limited areas in the City that are drained by separate storm sewers and are owned by the Chicago Park District, the Illinois Department of Transportation, Chicago Skyway, and others are not addressed in this SWMP.

3.3 Receiving Waters

The following waterbodies receive stormwater discharge from the City's MS4 outfalls:

- Calumet River
- Chicago River
- Crystal Creek
- Des Plaines River
- Higgins Creek
- Lake Michigan
- North Branch of the Chicago River
- Sanitary and Ship Canal
- Silver Creek
- South Branch of the Chicago River
- Willow Creek
- Willow-Higgins Creek

See Figure 1 for the locations of each of the waterbodies relative to the MS4 outfalls. See Appendix A for additional zoomed in maps of the MS4 areas.

Figure 1: MS4 Outfalls and Waterbodies

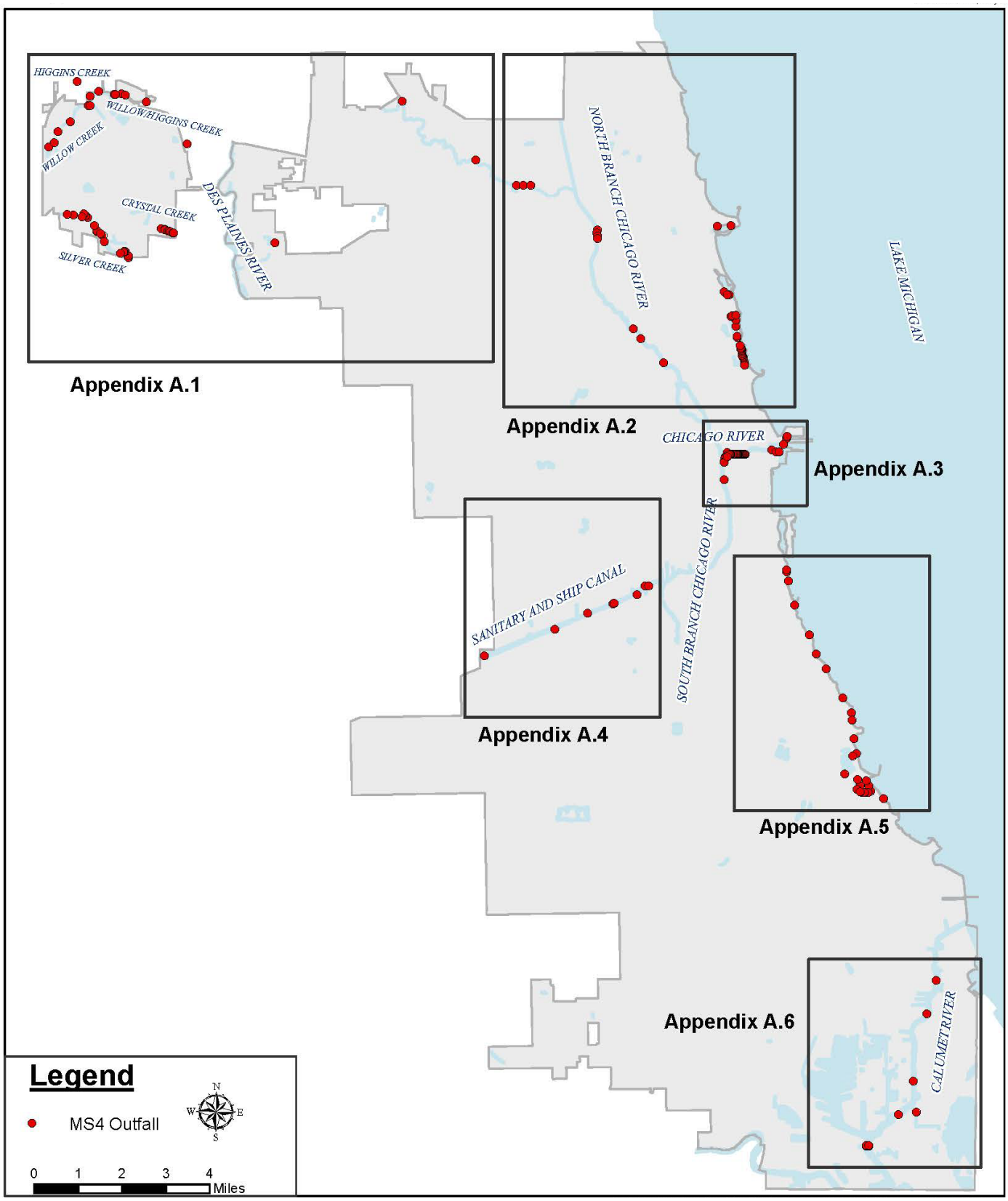

3.4 Total Maximum Daily Loads

As of January 2018, the two waterbodies in the City's jurisdiction that receive stormwater discharges and have an approved Total Maximum Daily Load (TMDL) are Lake Michigan beaches for E. Coli, and Higgins Creek for Chloride and Fecal Coliform. The City is in the process of evaluating the applicability of the approved TMDLs relative to the City's MS4 system. Future updates of the SWMP will reflect these investigations.

The remaining 10 waterbodies do not have approved TMDLs in the City. However, both the North Branch of the Chicago River and Lake Michigan nearshores have TMDLs that are in development. The City will track the progress of these TMDLs, and will adjust the SWMP accordingly in future updates.

3.5 City Departments' Responsibilities

The City has overall responsibility for complying with the terms and conditions of the NPDES MS4 permit and regulations. DWM has taken the lead with organizing efforts and assembling documentation across the various City departments, who have specific obligations in the SWMP. These departments include the Department of Fleet and Facility and Management (2FM), Department of Aviation (CDA), Department of Transportation (CDOT), Department of Buildings (DOB), Department of Public Health (DPH), and Department of Streets and Sanitation (DSS). Specific responsibilities for each department are laid out in the next section.

4 SIX MINIMUM CONTROLS

To meet the Six Minimum Controls, the City has instituted BMPs that focus on the reduction of pollutant loading in stormwater discharges to area waterways. Key features of the City's SWMP are summarized in the following sections according to each of the Six Minimum Controls as defined by the NPDES Phase II Stormwater Program under the General NPDES Permit ILR40. A copy of the ILR40 Permit can be found in Appendix B.

4.1 Public Education and Outreach

The City's plan to meet the Public Education and Outreach requirements of the NPDES Phase II Stormwater Program is through the development/procurement of specialized educational materials and dissemination of these materials to the public using the City's network of public information outlets. The City recognizes that Public Education and Outreach is an important aspect of the SWMP and has developed a program to educate its residents on what they can do to protect the City's water resources.

4.1.1 Speaking Engagement

To be proactive in educating engineers, architects, planners, developers, and the general public about stormwater requirements in the City, DOB develops, organizes, and runs technical seminars every year about the City's Stormwater Ordinance requirements. The technical seminars are intended to educate current and prospective participants involved with stormwater management to keep them abreast of the latest Stormwater Ordinance specifics. Properly informing the involved parties prior to the design and submission of stormwater management plans to the City helps streamline the process of DOB reviewing and examining these submittals. DOB plans to organize at least one seminar per year.

4.1.2 Classroom Education Material

As part of the Space to Grow program, DWM is assisting with the transformation of Chicago Public Schools (CPS) schoolyards from mainly impervious surfaces into green spaces through a joint partnership with Healthy Schools Campaign, Openlands, CPS, and Metropolitan Water Reclamation District of Greater Chicago (MWRDGC). Started in 2014, Space to Grow targets CPS locations that are in an area with a high risk of flooding and have at least 30,000 square feet available for a new schoolyard. Through the installation of green infrastructure like rain gardens and permeable pavements, the new schoolyards help reduce neighborhood flooding and remove pollutants from stormwater runoff.

Through the Space to Grow program, workshops are held with teachers and administrators of the corresponding schools to educate them on stormwater management and water conservation. Educational materials and activities are provided to the participants, which the educators then use as part of work plans and lessons for children in the schools. Students not only receive informative materials in the classroom, but also get to interact directly with installed green infrastructure to help educate further.

See Table 1 for the listing of Space to Grow schools that have been completed.

Table 1: Space to Grow Schools

School Name	Address	Ward	Community Name	Year Built
Cather Elementary	2908 W Washington Blvd	27	East Garfield Park	2015
Corkery Elementary	2510 S Kildare Ave	22	South Lawndale	2016
Grissom Elementary	12810 S Escanaba Ave	10	Hegewisch	2014
Gunsaulus Scholastic Academy	4420 S Sacramento Ave	15	Brighton Park	2016
Leland Elementary	712 S Lavergne Ave	29	Austin	2014
Morrill Elementary	6011 S Rockwell St	16	Chicago Lawn	2014
Orozco Elementary	1940 W 18th St	25	Lower West Side	2015
Schmid Elementary	9766 S Greenwood Ave	8	Pullman	2014
Wadsworth Elementary	6650 S Ellis Ave	5	Woodlawn	2016

Additionally, six more schools are planned to be completed in 2018.

4.1.3 Other Public Education

Through DWM's website, the City provides educational resources on stormwater management for the public. Currently held in the DWM Conservation section, brochures and pamphlets are available that include information on stormwater management BMPs for private residences and businesses. Specific topics include:

- Green Design
- Bioinfiltration Systems – Rain Gardens
- Green Roofs
- Drainage Swales
- Natural Landscaping
- Rain Barrels and Cisterns
- Filter Strips
- Naturalized Detention Basins

- Permeable Pavement and Alleys
- Downspout Disconnection

When the information becomes available in the coming years, relevant MS4 documents will be uploaded to a newly created MS4 page on the DWM website. Additionally, the Conservation section will continually be updated with any relevant materials.

4.2 Public Participation and Involvement

The City's strategy to meet the Public Participation and Involvement requirements of the permit is to conduct public gatherings and meetings where stormwater management issues can be discussed. Similar to the first of the previous minimum controls, Public Education and Outreach, the City recognizes the importance of working with the public on these topics and have put together strategies to get citizens involved.

4.2.1 Stakeholder Meetings

During the course of community outreach, DWM staff members regularly attend neighborhood meetings throughout the City to discuss a wide range of topics that pertain to water and sewer activities. As part of these meetings, DWM representatives specifically talk about stormwater management related issues and practices. These gatherings provide an opportunity for the public to ask precise questions on topics like basement flooding, downspout disconnection, and green infrastructure that relates specifically to them. See below for a listing of typical types of community meetings that DWM staff members attend throughout the year:

- Aldermanic Meetings – put together by the local Alderman to address general community concerns and topics
- Construction Projects/Specific Topics Meetings – developed to educate a community about an upcoming or ongoing project or initiative
    - Though the primary focus of these meetings is about the specific topic, discussions routinely involve stormwater management issues and practices.
- Residential Fairs – directed at specific communities or organizations in a neighborhood

4.2.2 Program Involvement

As previously discussed in Section 4.1.3, DWM assists with the transformation of CPS schoolyards through the Space to Grow program. Started in 2014, this program not only provides educational materials to students but also offers a chance to work with neighborhood residents as part of community workshops. A key goal of the schoolyard transformation is to create a space that the community can use as well. Once constructed, Space to Grow holds hands-on workshops and informative meetings about stormwater management and green infrastructure for the neighborhood residents. During these gatherings, the program provides the opportunity to discuss how some of the installed measures in the schoolyards could be implemented at private residences as well. This includes items like rain barrels, rain gardens, and downspout disconnection.

4.2.3 Other Public Involvement

To assist communities that are concerned about basement flooding, DWM created the Basement Flooding Partnership (BFP) program in 2012. In working closely with motivated residents as part of a BFP, DWM

believes strides can be made to reduce the overall risk of basement flooding in a neighborhood. For residents who are interested in the program, they are encouraged to email the DWM department at BasementFlooding@cityofchicago.org.

Once DWM receives a request, a representative reaches out to the resident to begin the process. Brochures, pamphlets, and informative documents are sent to the residents to educate them on BMPs for stormwater management that individual residences can complete. To ensure a successful BFP, DWM works with the concerned neighborhoods to ensure they have participation commitments from the majority of residents. It is critical to have high participation levels as neighborhood-wide stormwater management BMPs are much more efficient with high resident engagement. Once an approximately 70% resident commitment level is confirmed, official BFPs are formed, and field and office investigations are completed. Once the inspections and analysis are completed, DWM works with neighborhoods to help implement measures to reduce basement flooding risks. Alternatively, if a 70% resident commitment level is unable to be reached, DWM will work with the concerned neighbors to ensure that they are knowledgeable about BMPs that can be implemented on their property that can reduce flooding risks.

4.3 Illicit Discharge Detection and Elimination

The City's plan to meet the Illicit Discharge Detection and Elimination requirements of the permit is through continual verification of the MS4 system's inventory and condition. The City will also ensure the correct regulations are in place, so that illicit connections and illegal discharges can be properly prevented.

4.3.1 Sewer Map Preparation

To aid in tracking and managing the MS4 sewer network and the corresponding Six Minimum Controls, the City recognizes the importance of having an up-to-date and accurate MS4 system in Geographic Information System (GIS). With continual changes to the sewer system from construction and redevelopment efforts, DWM routinely updates the MS4 network to reflect alterations from activities and investigations by DWM, other City departments, and outside agencies. In addition to editing attributes of assets upstream of the MS4 outfalls, updates consist of adding new and abandoning existing storm outfalls in GIS. Because of these changes, the total of MS4 outfalls changes periodically. As of January 2018, the City maintains 160 MS4 outfalls.

Through the ongoing process of maintaining the storm sewer GIS network, the City will complete the following tasks in the coming years:

- DWM to perform desktop analysis to compare the GIS mapping of MS4 outfalls and their corresponding upstream pipes with the atlas page mapping to ensure storm system is properly mapped.
- Using inspection information that is obtained per Section 4.3.3, DWM to update GIS to reflect the estimated locations, connectivity, and attributes of the MS4 outfalls and their corresponding upstream pipes.
- DWM to change symbology of storm and outfall pipes in tablet GIS applications to assist field personnel in managing storm sewer assets.
- CDA to perform office and field verification of MS4 outfalls and their corresponding upstream pipes on O'Hare. CDA to coordinate results with DWM so the master GIS database can be updated.

- DWM to coordinate with CDOT to confirm MS4 outfalls affected by road construction are relayed on to DWM for updates to the master GIS database.
- DOB to map out private MS4 outfall locations from the project review log for DWM to use for informational purposes.
- DWM to work with the Chicago Park District to determine ownership status of MS4 outfalls on their property.
- When applicable, DWM to continue to add new and abandon existing MS4 outfalls in GIS.

4.3.2 Regulatory Control Program

As part of Municipal Code of Chicago Chapter 11-16 - Public Sewers and Drains, the City regulates illicit connections and illegal discharges. Specifically stated in the 2016 Regulations for Sewer Construction and Stormwater Management, illicit connections and illegal discharges are prohibited in the City. See below for an excerpt from the 2016 Regulations:

> *Pursuant to the City's NPDES permit for stormwater discharges, the construction, use, maintenance, or continued existence of illicit connections to any storm sewer system is prohibited. This prohibition expressly includes, without limitation, illicit connections made in the past, without regard to whether the connection was permissible under law or practices applicable or prevailing at the time of connection.*
>
> *An illicit connection is any drain or conveyance, whether on the surface or subsurface, that allows an illegal discharge to enter a storm sewer system. Illicit connections include, but are not limited to, any conveyances that allow any non-stormwater discharge, including sewage, process wastewater, or wash water, to enter a storm sewer system or any connections to a storm sewer system from indoor drains and sinks, without regard to whether said drain or connection had been previously allowed, permitted, or approved by a government agency. Illicit connections include, without limitation, any drain or conveyance connected from a commercial or industrial land use to a storm sewer system that has not been documented in plans, maps, or equivalent records and approved by the City.*
>
> *Unless otherwise approved by a NPDES permit, an illegal discharge is any direct or indirect non-stormwater discharge to a storm sewer system that is not water line flushing, fire hydrant flushing, landscape irrigation water, rising ground water, ground water infiltration, pumped ground water, discharge from a potable water source, foundation drains, air conditioning condensate, irrigation water (except for wastewater irrigation), springs, water from crawl space pumps, footing drains, storm sewer cleaning water, water from individual residential car washing, routine external building wash-down that does not use detergents, flows from riparian habitats and wetlands, dechlorinated pH neutral swimming pool discharges, residual street wash water, discharges or flows from firefighting activities, dechlorinated water reservoir discharges, and pavement wash waters where spills or leaks of toxic or hazardous materials have not occurred (unless all spilled material has been removed). Any discharge other than those permitted under these regulations is deemed to be a discharge of waste.*
>
> *The DWM may require, by written notice, that a person responsible for an illicit connection to a storm sewer system comply with the requirements of this Article to eliminate or secure approval for the connection by a specified date, without regard to whether the connection or discharges to it had been established or approved prior to the effective date of these Regulations. If, subsequent to*

eliminating a connection found to be in violation of these Regulations, the responsible person can demonstrate to DWM that an illegal discharge will no longer occur, said person may request City approval to reconnect. The reconnection or reinstallation of the connection shall be at the responsible person's expense.

The DWM may require, by written notice, that a person who is responsible for an illegal discharge, immediately, or by a specified date, discontinue the discharge and, as necessary, take measures to eliminate the source of the discharge to prevent the occurrence of future illegal discharges.

Additionally, as part of the review process for regulated developments, DOB reviews plans for each project to ensure that no illicit connections are planned. This review process helps eliminates mistakenly planned connections, and DWM's mason inspectors will evaluate and confirm new connections during construction to ensure no sanitary flow is connected to a storm sewer.

The full stormwater management Municipal Code and Regulations can be seen in Appendix C and D.

4.3.3 Program Evaluation and Assessment

In an ongoing effort to properly inventory the condition of the MS4 infrastructure, the City commits to inspecting all MS4 outfalls during each permit cycle with DWM inspecting a portion each year. During these inspections, the condition of the outfall will be documented, photographs will be taken, and GPS coordinates will be recorded. Per the results of the inspections, necessary actions will be taken, which include updating the GIS system per Section 4.3.1, and repairing failing outfalls.

4.3.4 Visual Dry Weather Screening

In coordination with the inspection efforts in Section 4.3.3, the City commits to performing dry weather screening for all MS4 outfalls during each permit cycle. While evaluating the condition and recording the GPS coordinate of each structure, DWM staff will also verify there is no dry weather flow from the outfall. If dry weather flow is observed, DWM staff will follow the established dry weather flow protocol to fully investigate the cause and develop a solution. Any evidence of past illegal discharges will be documented as well and dealt with accordingly.

4.3.5 Public Notification

To aid in the public's knowledge of MS4 infrastructure, catch basins upstream of MS4 outfalls are identified with medallions that signify the structures connect directly to the adjacent waterbody. Originally placed in 2012, the medallions encourage residents to not dump into the catch basin as this debris will flow straight to the MS4 outfall. DWM plans to inspect upstream structures from MS4 outfalls during each permit cycle to ensure that the "No Dumping" medallions are still in place. For ones that have been dislodged, new medallions will be added.

4.3.6 Other Illicit Discharge Controls

To assist in tracking and maintaining all of the MS4 information that is being developed through the various City departments, the City is in the process of creating central locations to consolidate this information. Using the inspection data that will be obtained from Sections 4.3.3 and 4.3.4, DWM will create a master inspection database that will hold all of the information and analysis, and can be linked to GIS. Additionally,

DWM is currently developing a central data repository that each of the City departments will have access to for secured sharing of MS4 documents.

4.4 Construction Site Runoff Control

The City strives to regulate and control stormwater runoff from construction locations throughout the City through coordination by DOB, CDA, DWM, and DPH. By controlling runoff at the construction sites, sediment and pollutant transfer is significantly reduced, which greatly benefits the adjacent waterbodies.

4.4.1 Regulatory Control Program

A key component of the City's strategy to control construction site runoff is through DOB's stormwater management review process for all regulated projects. Per Municipal Code of Chicago Chapter 11-18 – Stormwater Management, any construction activity, excavation, or grading that "disturbs a land area or substantially contiguous land areas of 15,000 or more square feet in the aggregate", "creates an at-grade impervious surface of 7,500 or more substantially contiguous square feet", or "results in any discharges of stormwater into any waters or separate sewer system" shall be considered a Regulated Development and must submit documents through the stormwater management review process.

After the Regulated Development submits their stormwater management documents to the City, DOB reviews the submittal for compliance with the City's Stormwater Ordinance. Further details about the review process and regulatory program, including processes for post-construction runoff control, will be discussed in Sections 4.4.2, 4.4.4, 4.5.2, 4.5.3, 4.5.4, and 4.5.5. Construction cannot proceed on Regulated Developments until DOB gives permission.

Additionally, as a significant portion of O'Hare is in a non-industrial MS4 drainage area, CDA ensures that the applicable projects adhere to the appropriate stormwater management regulations including obtaining and maintaining coverage under IEPA General NPDES Permit No. ILR10. For all sites over one acre or part of a larger development pursuant to section Part IV.B.4.a. of General Permit ILR10, stormwater pollution prevention plans (SWPPP) are developed for each construction site as part of the ILR10 permit coordination. ILR10 permits are obtained directly by CDA for continuity purposes.

4.4.2 Erosion and Sediment Control BMPs

The City of Chicago works to ensure that proper erosion and sediment control BMPs are being followed during construction. As part of the Regulatory Control Program discussed in Section 4.4.1, DOB and DWM review and update the Regulations for Sewer Construction and Stormwater Management and the Stormwater Management Ordinance Manual, which can be seen in Appendix E. These documents are what contractors, engineers, and owners are required to follow as part of their submittal process for Regulated Developments. Additionally, to ensure that the DWM field personnel and mason inspectors are up to date about with the latest regulations, DOB stormwater reviewers hold office and field trainings for DWM staff.

For Regulated Development submittals, DOB reviews erosion and sediment control plans to verify compliance with the Stormwater Ordinance. Once plans have been confirmed to be containing the proper controls, DOB requires the permittee to sign a soil erosion and sediment control affidavit to ensure proper measures are followed during construction.

Through DPH's routine examinations of construction sites, locations are inspected for cleanliness per Municipal Code of Chicago Chapter 13-32 – Building Permits. Sites are examined to ensure that mud and

dust trackout is not occurring outside of the designated construction area. When applicable, DPH issues tickets for construction site cleanliness violations.

For each applicable project at O'Hare, CDA ensures erosion and sediment control BMPs and practices comply with the Illinois Urban Manual, in addition to the City Stormwater Ordinance.

4.4.3 Other Waste Control Program

To encourage sustainability design, the City implemented the Chicago Sustainable Development Policy. Instituted in 2004 and most recently updated in January 2017, the program requires projects to enhance their sustainable performance to receive City assistance, which can include financial support or special approvals from the City.

In order to receive City assistance on a given project, the design must be judged to have met numerous sustainability measures. The requirements are broken down into the following categories: Health, Energy, Stormwater Management, Landscapes, Green Roofs, Water, Transportation, Solid Waste, Workforce, and Wildlife. Each measure that is met is given a score that adds up to the overall design score. If the design exceeds the necessary score, then the project can receive City assistance.

Specific to the Stormwater Management category, the Chicago Sustainable Development Policy provides six possible measures to obtain points: Exceed Stormwater Ordinance by 25%, Exceed Stormwater Ordinance by 50%, 100% Stormwater Infiltration, Sump Pump Capture and Reuse, 100-year Detention for Lot-to-Lot Buildings, and 100-year Detention for Bypass. For the first three options, only one measure can be obtained as they overlap each other.

A copy of the Chicago Sustainability Development Policy matrix can be found in Appendix F.

4.4.4 Site Plan Review Procedures

As part of the Regulatory Control Program discussed in Section 4.4.1, DOB reviews site plans submitted by Regulated Developments for compliance with the City's Stormwater Ordinance. Before construction can begin, DOB must approve site plan designs to ensure proper construction site runoff control measures will be implemented. This also includes construction at O'Hare, where as-built drawings are submitted following the completion of construction and final site surveys.

4.4.5 Site Inspection and Enforcement Procedures

Throughout construction at O'Hare, CDA personnel inspect ongoing projects for conformance with plans, approvals, and permit conditions. Inspections are conducted on a weekly basis and following a precipitation event greater than 0.5 inches to ensure erosion and sediment control measures are still in place. CDA has authority to withhold payment to a contractor for portions of work that are out of compliance until the contractor takes corrective action.

4.4.6 Other Construction Site Runoff Controls

Although debris should be retained on site during construction efforts, DWM requests contractors to cover adjacent catch basins to prevent debris from entering the sewer system. With a mesh cover installed on the catch basins during construction operations, miscellaneous particles are prevented from inflowing while stormwater can still flow in to the system.

4.5 Post-Construction Runoff Control

To meet the Post-Construction Runoff Control portion of the Six Minimum Controls, the City promotes, regulates, and installs green infrastructure BMPs to retain stormwater on-site. By limiting the amount of stormwater leaving a redeveloped area, less flow is conveyed to the sewer system, which leads to a reduction of pollutant transfer to the sewers and ultimately to the adjacent waterbodies.

4.5.1 Community Control Strategy

Concurrently with the ongoing construction efforts throughout the City, City departments have installed green infrastructure to control runoff after the project has been constructed. The following list provides examples of types of projects and their corresponding green infrastructure installations that the City has completed in the past few years or are planning in the coming years.

- Road Reconstruction – bioswales, infiltration trenches, permeable pavements, rain gardens
- Streetscape and Traffic Calming – permeable pavements, planter boxes, rain gardens
- Schoolyard Restoration – permeable pavements, rain gardens
- Parking Lot Transformation – green landscaping
- Sewer and Water Replacement – permeable pavements
- Green Roof – rain gardens
- Green Alleys – permeable pavements

4.5.2 Regulatory Control Program

As part of the Regulatory Control Program discussed in Section 4.4.1, DOB and DWM review and update the Regulations for Sewer Construction and Stormwater Management and the Stormwater Management Ordinance Manual. Post-construction runoff control measures in these documents are reviewed each year to ensure the proper standards are being mandated.

4.5.3 Long Term O&M Procedures

To ensure site runoff is controlled long term after construction is completed, the City requires Regulated Developments to produce and follow Operation and Maintenance (O&M) Plans. The O&M Plans describe the procedures for installed stormwater BMPs, such as green roofs, permeable pavements, biofiltration systems, detention systems, restrictors, etc. Through the stormwater management submittal process, DOB verifies that O&M Plans are developed prior to the beginning of construction and confirms through post-construction inspections that the O&M Plan is being followed.

4.5.4 Pre-Construction Review of BMP Designs

As part of the Regulatory Control Program discussed in Section 4.4.1, DOB reviews site plans submitted by Regulated Developments for BMP design compliance with the City's Stormwater Ordinance. To help control post-construction runoff, the City's Stormwater Ordinance mandates BMP designs are installed to manage the peak rate of discharge from a development. Additionally, for projects completed at O'Hare, CDA submits 90% drawings to DWM and the local Soil and Water Conservation District (North Cook County or Kane-DuPage) for review and approval.

4.5.5 Post-Construction Inspections

Following substantial completion of all Regulated Developments, DOB performs site inspections to ensure post-construction runoff controls are in compliance with the City's Stormwater Ordinance. Performed by a licensed professional engineer, developments are also evaluated for conformity with site plans, approvals, and permit conditions. For detention basins, inspections are completed routinely until permanent soil stabilization is established.

4.6 Pollution Prevention and Good Housekeeping

The last piece of the City's approach to comply with NPDES Permit ILR40 requirements is through pollution prevention and good housekeeping measures. Through trainings, sewer maintenance and rehabilitation, waste collection and disposal, salt runoff control measures, pollution prevention plans, and site management BMPs, the City reduces the quantity of contaminants that reach the Chicago area waterbodies from stormwater runoff.

4.6.1 Employee Training Program

A strategy that the City employs to reduce pollution from stormwater runoff from City activities is through the training of employees and contractors. 2FM, CDA, CDOT, and DWM utilize training protocols and seminars about stormwater management and pollution prevention BMPs that are specific to their individual departments and the employee's role.

- 2FM – Launched in April 2015, the Sustainable Operations Plan (SOP) provides actions for management, employees, and departments to implement as part of their daily operations. Intended to remind departments to make environmentally conscious decisions, the SOP integrates sustainability measures into everyday activities and includes detailed individual plans and policies about specific procedures like Erosion Control and Landscape Management.
    - The SOP has been rolled out to 2FM staff and is required training for new 2FM employees. In the coming years, the SOP will be expanded to other City departments, and the trainings will be given to applicable employees.
- CDA – As part of requirements to obtain a security badge for O'Hare property, CDA requires employees and contractors to undergo trainings on spill prevention and spill control procedures. Approximately 5,000 people receive these trainings each year.
- CDOT – To educate staff and consultants on the latest policies and technologies, CDOT provides lunch and learn seminars on various topics including stormwater management.
- DWM – With mason inspectors routinely performing investigations on new construction efforts, DWM trains the inspectors on the City's Stormwater Ordinance requirements and MS4 regulations.

4.6.2 Inspection and Maintenance Program

The City has instituted robust sewer cleaning, rehabilitation, and replacement programs that removes debris buildup from the sewer system, repairs aging or deteriorated assets, and upsizes hydraulic deficient sewers. Through methodical grid cleaning efforts and responses to customer service complaints, DWM's maintenance crews' clean sewers and structures throughout the City, including approximately 25,000 catch basins each year.

To maintain and improve the performance levels of the system, DWM lines and replaces sewers and structures. As part of the Sewer Lining Program, DWM lined 313 miles of sewer from 2012 through 2017, and as seen in Figure 2, and plans to line 168 miles from 2018 through 2021.

Figure 2: Sewer Lining Construction and Goals

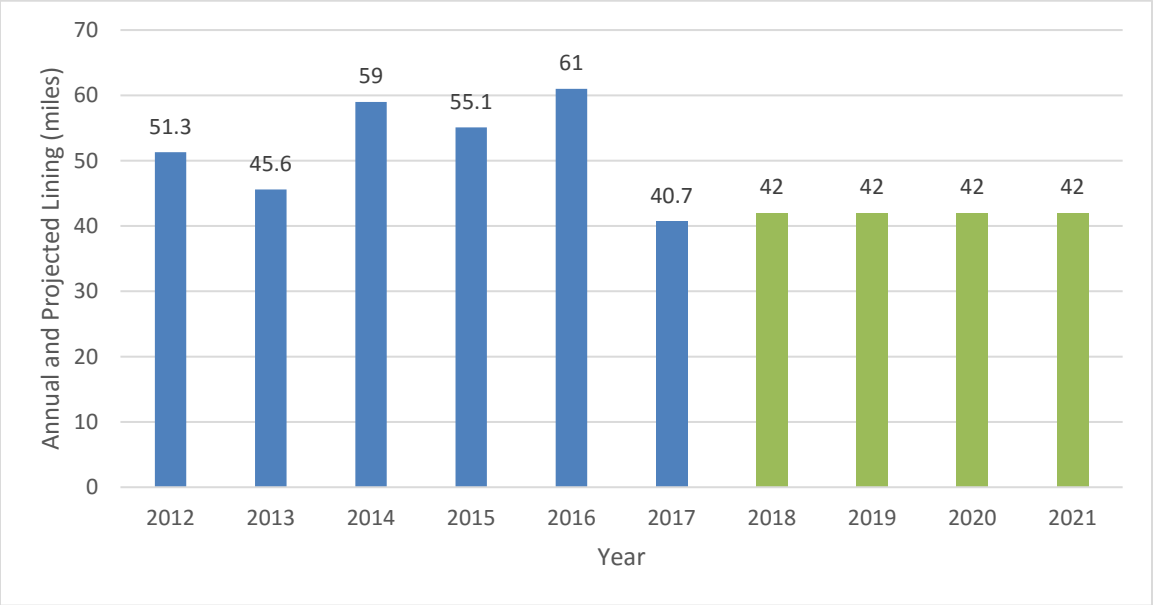

In addition to lining sewers, DWM lined over 76,000 structures from 2012 through 2017 and plans to line 5,000 structures per year from 2018 through 2021 as seen in Figure 3.

Figure 3: Sewer Structure Lining Construction and Goals

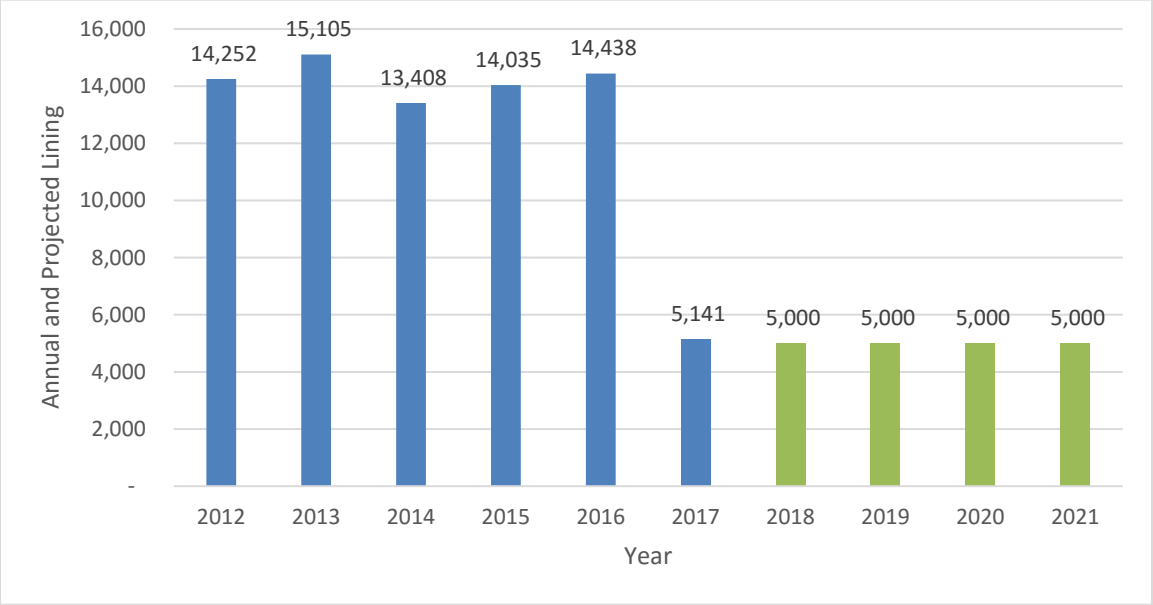

Through the Sewer Main Improvement Program, DWM replaced 130 miles of sewer from 2012 through 2017, and as seen in Figure 4, plans to replace 88 miles from 2018 through 2021.

Figure 4: Sewer Replacement Construction and Goals

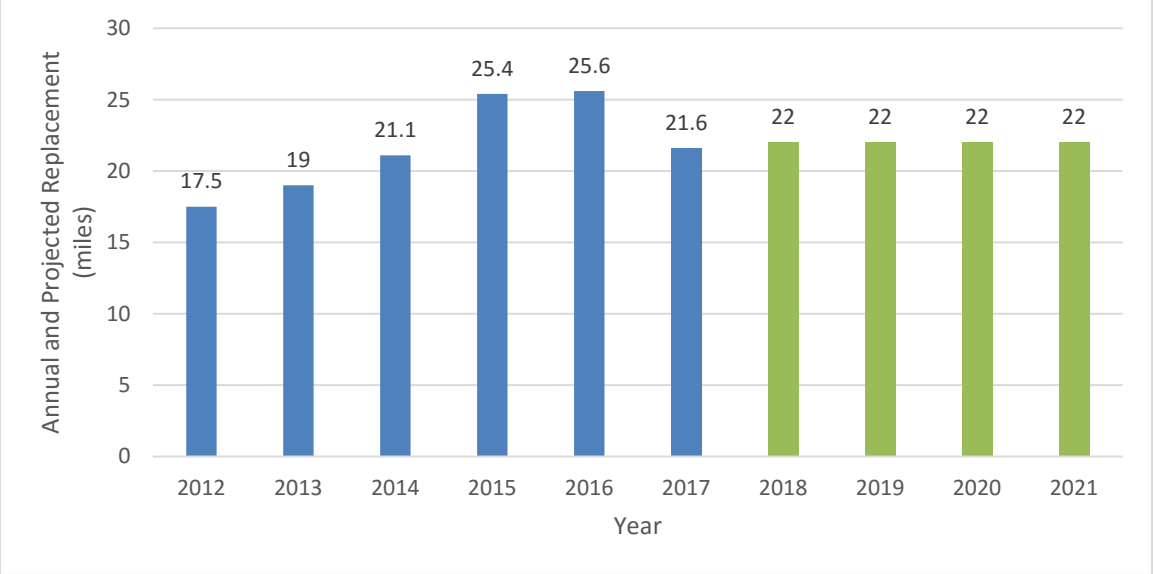

4.6.3 Municipal Operations Stormwater Control

To prevent medium to large sized debris from entering catch basins at the surface, DWM has switched the standard catch basin lid to have smaller slots for runoff collection. For catch basins that are part of a Capital Improvement Plan project, or are rehabbed or replaced as a separate task, new catch basins lids are installed to minimize the quantity of debris entering the system. Colloquially called “ADA lids” in reference to the Americans with Disabilities Act (ADA), the covers are also better suited for wheelchairs and bicycles as it is less likely that a wheel or tire will slip through the slots.

4.6.4 Municipal Operations Waste Disposal

As part of the City’s plan to prevent pollutants from contaminating area waterbodies through stormwater runoff, DSS, CDA, and 2FM perform routine street sweeping and waste disposal.

During the sweeping season of April through November, DSS deploys a street sweeper every working day for each of the 50 wards in the City. Through their sweeping efforts, over 200,000 miles of streets and over 2,000 alleys, including green alleys, are swept each year. Collected debris from the street sweeping efforts is disposed of per standardized waste disposal procedures. See Table 2 for street sweeping totals from 2013 through 2016.

Table 2: Street Sweeping Totals

Year	Miles of Streets Swept	Number of Alleys Swept	Cubic Yards of Waste Collected
2013	218,060	3,657	137,629
2014	206,851	2,299	153,607
2015	226,931	2,402	149,792
2016	231,029	3,855	138,311

When appropriate throughout the year, CDA collects and disposes of excess waste from airfield pavement before it can enter the downstream MS4 sewer system. Utilizing a waste collection contractor, municipal operations debris is collected from airfield pavement and taken off-site to a municipal landfill.

Due to the Riverwalk's significant pedestrian traffic and proximity to the Chicago River, 2FM operates two trash collecting skimmer boats along the Riverwalk during the warm weather months. With direct access to the water for pedestrians and sheet flow runoff locations along the Riverwalk, waste can enter the Chicago River from pollution, so the skimmer boat collects waste that could have traversed to the River.

4.6.5 Flood Management/Assess Guidelines

To maintain the integrity of the City's floodplain, DOB performs floodplain reviews for all regulated projects within or adjacent to the mapped floodplain. Reviews are completed by professional engineers and certified floodplain managers and ensure that proper floodplain controls are performed.

4.6.6 Other Municipal Operations Controls

In addition to the measures mentioned in Sections 4.6.1 through 4.6.5, the City performs miscellaneous actions to prevent pollution of the adjacent waterbodies.

To reduce excess salt runoff from deicing operations, DSS instituted numerous BMPs in the storage and application of salt. Through the use of indoor or covered storage locations, impervious pads, runoff containment, level loading areas, and good housekeeping control, DSS controls salt runoff from storage facilities. For application operations, DSS performs the following practices: pre-wetting, anti-icing, variable application rates, calibration of equipment, proper operational techniques that are reinforced through supervisor oversight and yearly updates on BMPs, grip of road measurements, and tracking of customer complaints to identify areas of improvement.

As part of the management of the City's fleets and facilities, 2FM follows specific BMPs that prevent pollution. For fleet management, 2FM has measures to adhere to during fueling, vehicle and equipment maintenance, outdoor vehicle and equipment storage, vehicle washing, painting, and liquid storage. For facilities management, 2FM follows pollution prevention procedures during the storage, handling, and processing of materials, as well as spill response and containment actions.

During the course of operations at the City's airports, CDA ensures to maintain compliance with applicable pollution prevention plans. This includes SWPPPs, Spill Prevention, Control, and Countermeasure (SPCC) rules, and Slug Control Plans. When required, CDA updates the pollution prevention plans.

Appendix A

Outfall Locations and Waterbodies Maps

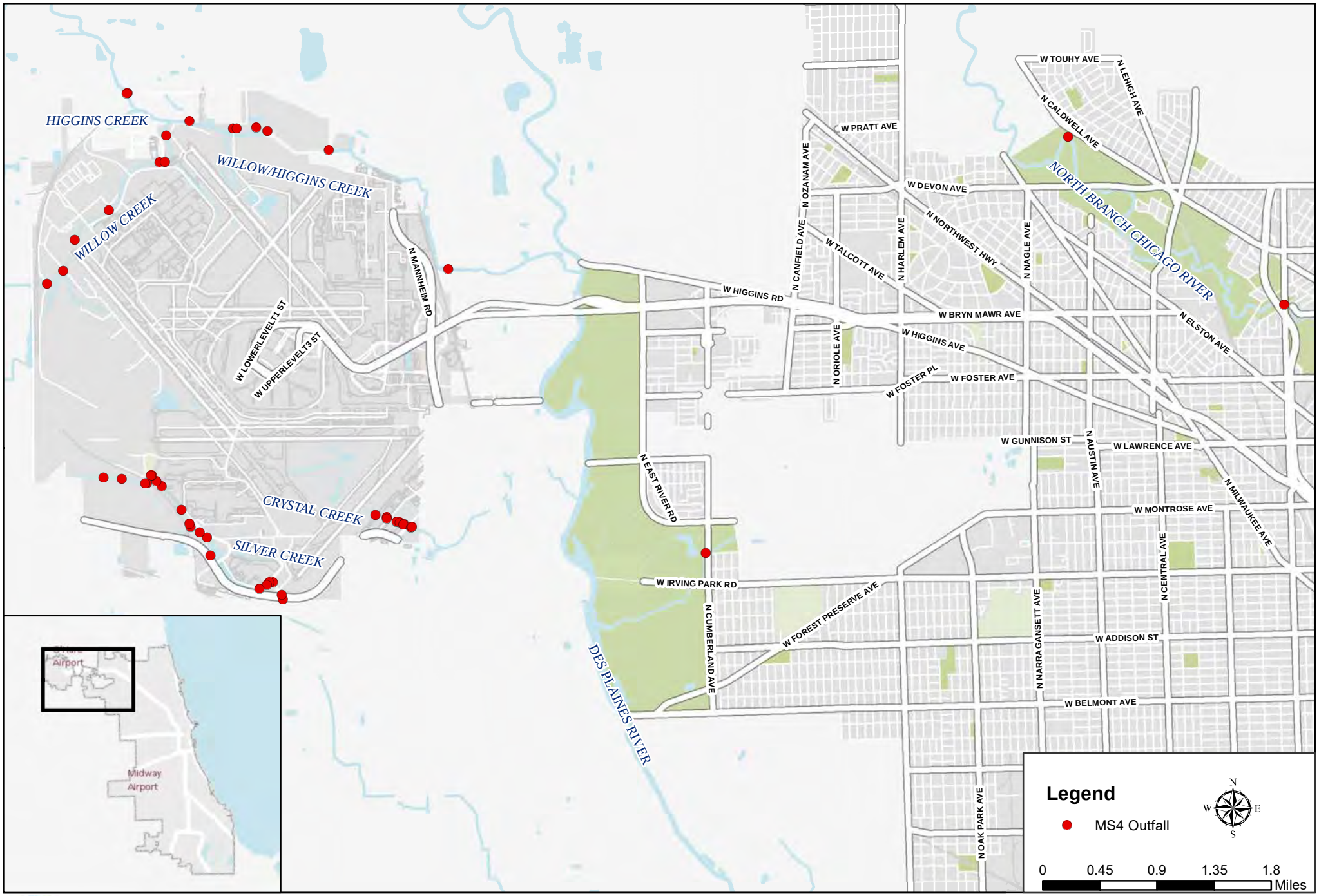

City of Chicago
Department of Water Management
MS4 Outfall Locations
Appendix A.1

City of Chicago
Department of Water Management
MS4 Outfall Locations
Appendix A.2

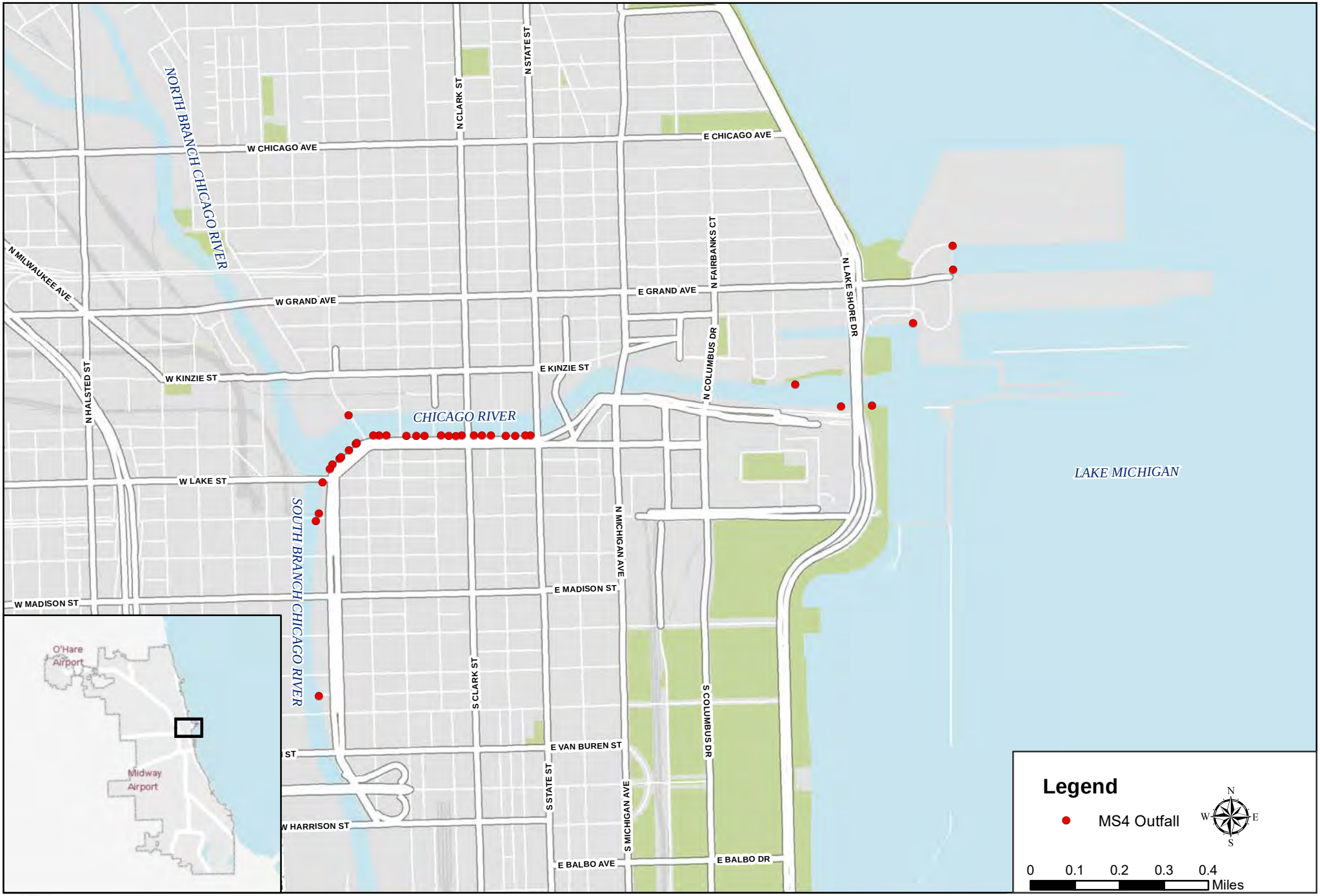

City of Chicago
Department of Water Management
MS4 Outfall Locations
Appendix A.3

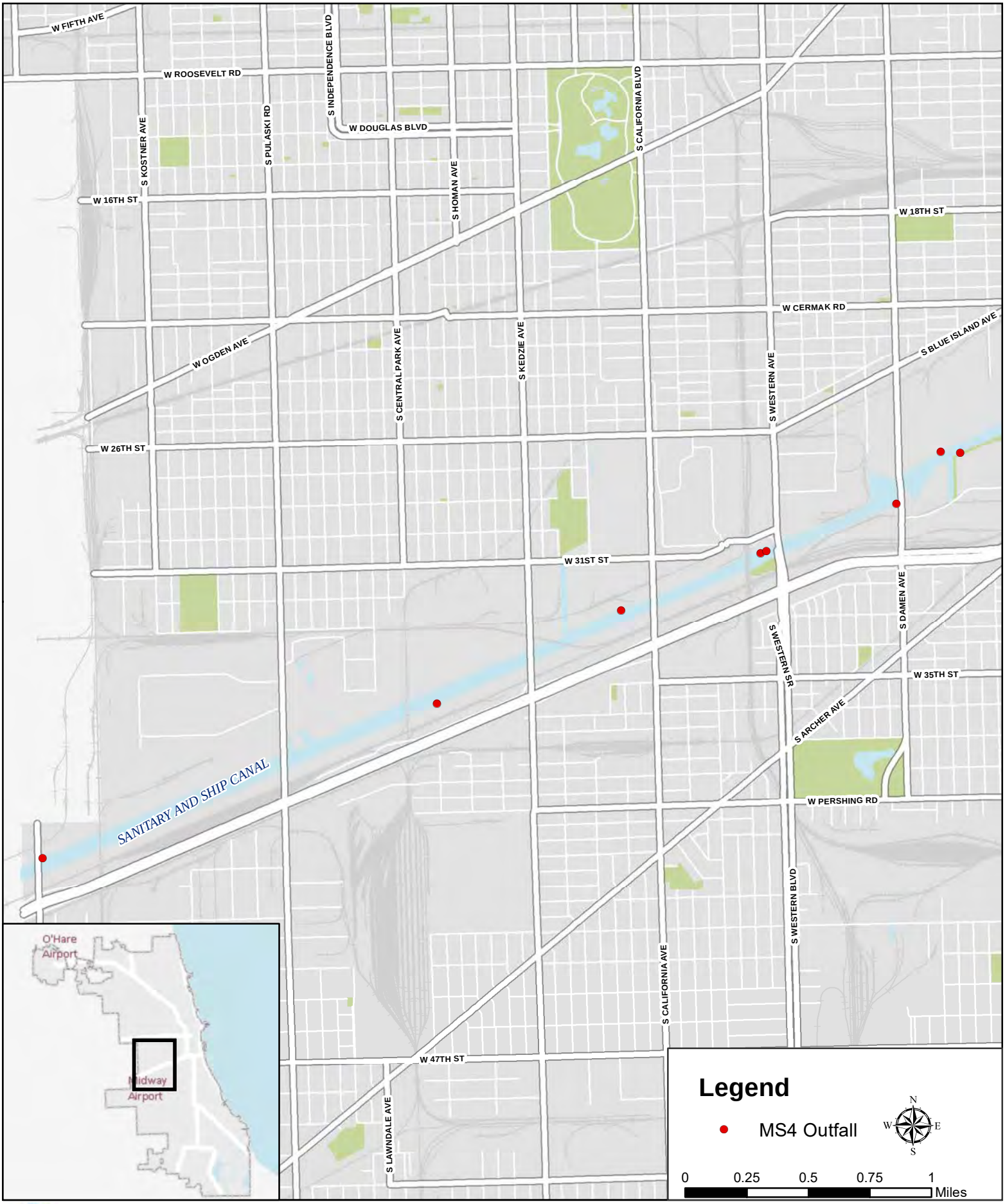

City of Chicago
Department of Water Management
MS4 Outfall Locations
Appendix A.4

City of Chicago
Department of Water Management
MS4 Outfall Locations
Appendix A.5

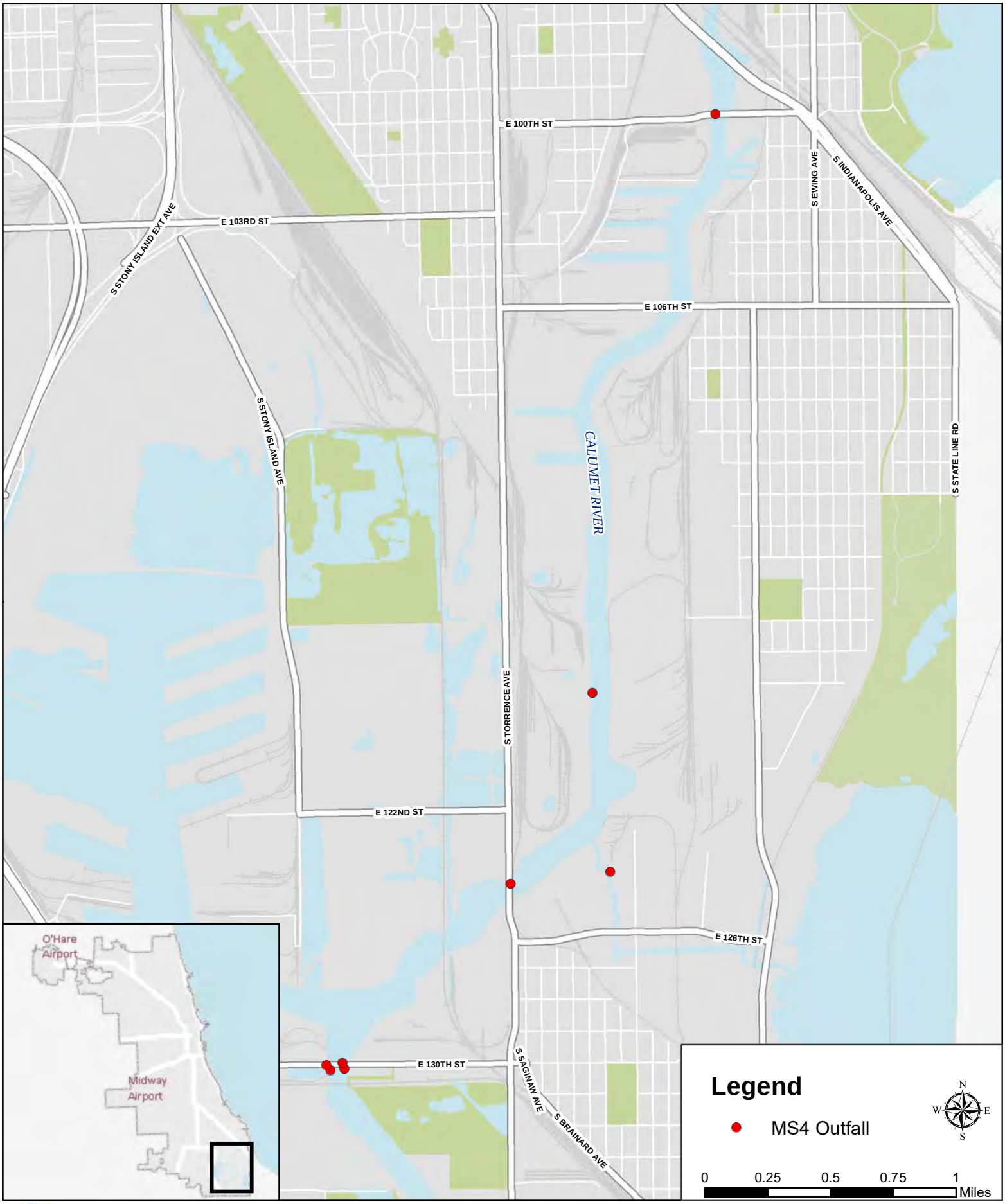

City of Chicago
Department of Water Management
MS4 Outfall Locations
Appendix A.6

Appendix B

General NPDES Permit ILR40

ILLINOIS ENVIRONMENTAL PROTECTION AGENCY

1021 NORTH GRAND AVENUE EAST, P.O. BOX 19276, SPRINGFIELD, ILLINOIS 62794-9276 • (217) 782-3397
BRUCE RAUNER, GOVERNOR LISA BONNETT, DIRECTOR

217/782-0610

February 10, 2016

Re: General NPDES Permit ILR40 for Discharge from Small Municipal Separate Storm Sewer Systems (MS4)

Dear Permittee:

Enclosed with this letter is the reissued General NPDES Permit ILR40 for the discharge of storm water from small MS4s. Significant changes have been made in the final permit based on comments received by the Agency. Please review the final permit and make any necessary modifications to your storm water management program. The Agency has also provided a list of permit modifications and a summary of responses to comments received by the Agency.

Please note that the Agency will be reviewing the Notice of Intent (NOI) for all NOIs that have been received. If you have not submitted an NOI, you must submit a NOI within 90 days of the effective date of the permit. A separate permit coverage letter will be sent by the Agency to persons who have submitted a complete NOI after review of the NOI.

Should you have any questions or comments regarding this letter, please contact Melissa Parrott or Cathy Demeroukas of my staff at (217) 782-0610 or at the above address.

Sincerely,

Alan Keller

Alan Keller, P.E.
Manager, Permit Section
Division of Water Pollution Control

SAK:16020801bah/MS4 NOI Letter

4302 N. Main St., Rockford, IL 61103 (815) 987-7760
595 S. State, Elgin, IL 60123 (847) 608-3131
2125 S. First St., Champaign, IL 61820 (217) 278-5800
2009 Mall St., Collinsville, IL 62234 (618) 346-5120

9511 Harrison St., Des Plaines, IL 60016 (847) 294-4000
412 SW Washington St., Suite D, Peoria, IL 61602 (309) 671-3022
2309 W. Main St., Suite 116, Marion, IL 62959 (618) 993-7200
100 W. Randolph, Suite 10-300, Chicago, IL 60601

PLEASE PRINT ON RECYCLED PAPER

General NPDES Permit No. ILR40

Illinois Environmental Protection Agency
Division of Water Pollution Control
1021 North Grand East
P.O. Box 19276
Springfield, Illinois 62794-9276

NATIONAL POLLUTANT DISCHARGE ELIMINATION SYSTEM

General NPDES Permit
For
Discharges from Small Municipal Separate Storm Sewer Systems

Expiration Date: February 28, 2021

Issue Date: February 10, 2016

Effective Date: March 1, 2016

In compliance with the provisions of the Illinois Environmental Protection Act, the Illinois Pollution Control Board Rules and Regulations (35 Ill. Adm. Code, Subtitle C, Chapter 1) and the Clean Water Act, the following discharges may be authorized by this permit in accordance with the conditions herein:

Discharges of only storm water from small municipal separate storm sewer systems (MS4s), as defined and limited herein. Storm water means storm water runoff, snow melt runoff, and surface runoff and drainage.

Receiving waters: Discharges may be authorized to any surface water of the State.

To receive authorization to discharge under this general permit, a facility operator must submit a Notice of Intent (NOI) as described in Part II of this permit to the Illinois Environmental Protection Agency (Illinois EPA). Authorization, if granted, will be by letter and include a copy of this permit.

Alan Keller

Alan Keller, P.E.
Manager, Permit Section
Division of Water Pollution Control

NPDES/Hutton/stormwater/MS4/MSFinal2-9-16.daa

CONTENTS OF GENERAL PERMIT ILR40

PART I. COVERAGE UNDER GENERAL PERMIT ILR40 ..... Page 2

PART II. NOTICE OF INTENT (NOI) REQUIREMENTS ..... Page 3

PART III. SPECIAL CONDITIONS ..... Page 4

PART IV. STORM WATER MANAGEMENT PROGRAMS ..... Page 6

PART V. MONITORING, RECORDKEEPING, AND REPORTING ..... Page 12

PART VI. DEFINITIONS AND ACRONYMS ..... Page 14

ATTACHMENT H. STANDARD CONDITIONS ..... Page 16

PART I. COVERAGE UNDER GENERAL PERMIT ILR40

A. Permit Area

This permit covers all areas of the State of Illinois.

B. Eligibility

1. This permit authorizes discharges of storm water from MS4s as defined in 40 CFR 122.26 (b)(16) as designated for permit authorizations pursuant to 40 CFR 122.32.

2. This permit authorizes the following non-storm water discharges provided they have been determined not to be substantial contributors of pollutants to a particular small MS4 applying for coverage under this permit:

   - Water line and fire hydrant flushing,
   - Landscape irrigation water,
   - Rising ground waters,
   - Ground water infiltration,
   - Pumped ground water,
   - Discharges from potable water sources, (excluding wastewater discharges from water supply treatment plants)
   - Foundation drains,
   - Air conditioning condensate,
   - Irrigation water, (except for wastewater irrigation),
   - Springs,
   - Water from crawl space pumps,
   - Footing drains,
   - Storm sewer cleaning water,
   - Water from individual residential car washing,
   - Routine external building washdown which does not use detergents,
   - Flows from riparian habitats and wetlands,
   - Dechlorinated pH neutral swimming pool discharges,
   - Residual street wash water,
   - Discharges or flows from fire fighting activities
   - Dechlorinated water reservoir discharges, and
   - Pavement washwaters where spills or leaks of toxic or hazardous materials have not occurred (unless all spilled material has been removed).

3. Any municipality covered by this general permit is also granted automatic coverage under Permit No. ILR10 for the discharge of storm water associated with construction site activities for municipal construction projects disturbing one acre or more. The permittee is granted automatic coverage 30 days after Agency receipt of a Notice of Intent to Discharge Storm Water from Construction Site Activities from the permittee. The Agency will provide public notification of the construction site activity and assign a unique permit number for each project during this period. The permittee shall comply with all the requirements of Permit ILR10 for all such construction projects.

C. Limitations on Coverage

The following discharges are not authorized by this permit:

1. Storm water discharges that are mixed with non-storm water or storm water associated with industrial activity unless such discharges are:

   a. In compliance with a separate NPDES permit; or

   b. Identified by and in compliance with Part I.B.2 of this permit.

2. Storm water discharges that the Agency determines are not appropriately covered by this general permit. This determination may include discharges identified in Part 1.B.2 or that introduce new or increased pollutant loading that may be a significant contributor of pollutants to the receiving waters.

3. Storm water discharges to any receiving water specified under 35 Ill. Adm. Code 302.105(d) (6).

4. The following non-storm water discharges are prohibited by this permit: concrete and wastewater from washout of concrete (unless managed by an appropriate control), drywall compound, wastewater from washout and cleanout of stucco, paint, form release oils, curing compounds and other construction materials, fuels, oils, or other pollutants used in vehicle and equipment operation and maintenance, soaps, solvents, or detergents, toxic or hazardous substances from a spill or other release, or any other pollutant that could cause or tend to cause water pollution.

5. Discharges from dewatering activities (including discharges from dewatering of trenches and excavations) are allowable if managed by appropriate controls as specified in a project's storm water pollution prevention plan, erosion and sediment control plan, or storm water management plan.

D. Obtaining Authorization

In order for storm water discharges from small MS4s to be authorized to discharge under this general permit, a discharger must:

1. Submit a Notice of Intent (NOI) in accordance with the requirements of Part II using an NOI form provided by the Agency (or a photocopy thereof).

2. Submit a new NOI in accordance with Part II within 30 days of a change in the operator or the addition of a new operator.

3. Unless notified by the Agency to the contrary, an MS4 owner submitting a complete NOI in accordance with the requirements of this permit will be authorized to discharge storm water from their small MS4s under the terms and conditions of this permit 30 days after the date that the NOI is received. Authorization will be by letter and include a copy of this permit. The Agency may deny coverage under this permit and require submittal of an application for an individual NPDES permit based on a review of the NOI or other information.

PART II. NOTICE OF INTENT (NOI) REQUIREMENTS

A. Deadlines for Notification

1. If an MS4 was automatically designated under 40 CFR 122.32(a)(1) to obtain permit coverage, then you were required to submit an NOI or apply for an individual permit by March 10, 2003.

2. If an MS4 has coverage under the previous general permit for storm water discharges from small MS4s, you must renew your permit coverage under this part. Unless previously submitted for this general permit, you must submit a new NOI within 90 days of the effective date of this reissued general permit for storm water discharges from small MS4s to renew your NPDES permit coverage. The permittee shall comply with any new provisions of this general permit within 180 days of the effective date of this permit and include modifications pursuant to the NPDES permit in its Annual Report.

3. If an MS4 is designated in writing by Illinois EPA under 40 CFR 122.32(a)(2) during the term of this general permit, then you are required to submit an NOI within 180 days of such notice.

4. MS4s are not prohibited from submitting an NOI after established deadlines for NOI submittals. If a late NOI is submitted, your authorization is only for discharges that occur after permit coverage is granted. Illinois EPA reserves the right to take appropriate enforcement actions against MS4s that have not submitted a timely NOI.

B. Contents of Notice of Intent

Dischargers seeking coverage under this permit shall submit the Illinois MS4 NOI form. The NOI shall be signed in accordance with Standard Condition 11 of this permit and shall include all of the following information:

1. The street address, county, and the latitude and longitude of the municipal office for which the notification is submitted;

2. The name, address, and telephone number of the operator(s) filing the NOI for permit coverage and the name, address, telephone number, and email address of the person(s) responsible for implementation and compliance with the MS4 Permit; and

3. The name and segment identification of the receiving water(s), whether any segments(s) is or are listed as impaired on the most recently approved list pursuant to Section 303(d) of the Clean Water Act or any currently applicable Total Maximum Daily Load (TMDL) or alternate water quality study, and the pollutants for which the segment(s) is or are impaired. The most recent 303(d) list may be found at http://www.epa.state.il.us/water/water-quality/index.html. Information regarding TMDLs may be found at http://www.epa.state.il.us/water/tmdl/.

4. The following shall be provided as an attachment to the NOI:

   a. A description of the best management practices (BMPs) to be implemented and the measurable goals for each of the storm water minimum control measures in paragraph IV. B. of this permit designed to reduce the discharge of pollutants to the maximum extent practicable;

   b. The month and year in which you implemented any BMPs of the six minimum control measures, and the month and year in which you will start and fully implement any new minimum control measures or indicate the frequency of the action;

   c. For existing permittees, provide adequate information or justification on any BMPs from previous NOIs that could not be implemented; and

   d. Identification of a local qualifying program, or any partners of the program if any.

5. For existing permittees, certification that states the permittee has implemented necessary BMPs of the six minimum control measures.

C. All required information for the NOI shall be submitted electronically and in writing to the following addresses:

Illinois Environmental Protection Agency
Division of Water Pollution Control
Permit Section
Post Office Box 19276
Springfield, Illinois 62794-9276

epa.ms4noipermit@illinois.gov

D. Shared Responsibilities

Permittees may partner with other MS4s to develop and implement their storm water management program. Each MS4 must fill out the NOI form. MS4s may also jointly submit their individual NOI in coordination with one or more MS4s. The description of their storm water management program must clearly describe which permittees are responsible for implementing each of the control measures. Each permittee is responsible for implementation of best management practices for the Storm Water Management Program within its jurisdiction.

PART III. SPECIAL CONDITIONS

A. The Permittee's discharges, alone or in combination with other sources, shall not cause or contribute to a violation of any applicable water quality standard outlined in 35 Ill. Adm. Code 302.

B. If there is evidence indicating that the storm water discharges authorized by this permit cause, or have the reasonable potential to cause or contribute to a violation of water quality standards, you may be required to obtain an individual permit or an alternative general permit or the permit may be modified to include different limitations and/or requirements.

C. If a TMDL allocation or watershed management plan is approved for any water body into which you discharge, you must review your storm water management program to determine whether the TMDL or watershed management plan includes requirements for control of storm water discharges. If you are not meeting the TMDL allocations, you must modify your storm water management program to implement the TMDL or watershed management plan within eighteen months of notification by the Agency of the TMDL or watershed management plan approval. Where a TMDL or watershed management plan is approved, the permittee must:

1. Determine whether the approved TMDL is for a pollutant likely to be found in storm water discharges from your MS4.

2. Determine whether the TMDL includes a pollutant waste load allocation (WLA) or other performance requirements specifically for storm water discharge from your MS4.

3. Determine whether the TMDL addresses a flow regime likely to occur during periods of storm water discharge.

4. After the determinations above have been made and if it is found that your MS4 must implement specific WLA provisions of the TMDL, assess whether the WLAs are being met through implementation of existing storm water control measures or if additional control measures are necessary.

5. Document all control measures currently being implemented or planned to be implemented to comply with TMDL waste load allocation(s). Also include a schedule of implementation for all planned controls. Document the calculations or other evidence that shows that the WLA will be met.

6. Describe and implement a monitoring program to determine whether the storm water controls are adequate to meet the WLA.

7. If the evaluation shows that additional or modified controls are necessary, describe the type and schedule for the control additions/revisions.

8. Continue requirements 4 through 7 above until monitoring from two continuous NPDES permit cycles demonstrate that the WLAs or water quality standards are being met.

9. If an additional individual permit or alternative general permit includes implementation of work pursuant to an approved TMDL or alternate water quality management plan, the provisions of the individual or alternative general permit shall supersede the conditions of Part III.C. TMDL information may be found at http://www.epa.state.il.us/water/tmdl/.

D. If the permittee performs any deicing activities that can cause or contribute to a violation of an applicable State chloride water quality standard, the permittee must participate in any watershed group(s) organized to implement control measures which will reduce the chloride concentration in any receiving stream in the watershed.

E. Authorization: Owners or operators must submit either an NOI in accordance with the requirements of this permit or an application for an individual NPDES Permit to be authorized to discharge under this General Permit. Authorization, if granted will be by letter and include a copy of this Permit. Upon review of an NOI, the Illinois EPA may deny coverage under this permit and require submittal of an application for an individual NPDES permit.

1. Automatic Continuation of Expired General Permit: Except as provided in III.E.2 below, when this General Permit expires the conditions of this permit shall be administratively continued until the earliest of the following:

   a. 150 days after the new General Permit is reissued;

   b. The Permittee submits a Notice of Termination (NOT) and that notice is approved by Illinois EPA;

   c. The Permittee is authorized for coverage under an individual permit or the renewed or reissued General Permit;

   d. The Permittee's application for an individual permit for a discharge or NOI for coverage under the renewed or reissued General Permit is denied by the Illinois EPA; or

   e. Illinois EPA issues a formal permit decision not to renew or reissue this General Permit. This General Permit shall be automatically administratively continued after such formal permit decision.

2. Duty to Reapply:

   a. If the permittee wishes to continue an activity regulated by this General Permit, the permittee must apply for permit coverage before the expiration of the administratively continued period specified in III.E.1 above.

   b. If the permittee reapplies in accordance with the provisions of III.E.2.a above, the conditions of this General Permit shall continue in full force and effect under the provisions of 5 ILCS 100/10-65 until the Illinois EPA makes a final determination on the application or NOI.

   c. Standard Condition 2 of Attachment H is not applicable to this General Permit.

F. The Agency may require any person authorized to discharge by this permit to apply for and obtain either an individual NPDES permit or an alternative NPDES general permit. Any interested person may petition the Agency to take action under this paragraph. The Agency may require any owner or operator authorized to discharge under this permit to apply for an individual or alternative general NPDES permit only if the owner or operator has been notified in writing that a permit application is required. This notice shall include a brief statement of the reasons for this decision, an application form, a statement setting a deadline for the owner or operator to file the application, and a statement that on the effective date of the individual NPDES permit or the alternative general permit as it applies to the individual permittee, coverage under this general permit shall automatically terminate. The Agency may grant additional time to submit the application upon request of the applicant. If an owner or operator fails to submit in a timely manner an individual or alternative general NPDES permit application required by the Agency under this paragraph, then the applicability of this permit to the individual or alternative general NPDES permittee is automatically terminated by the date specified for application submittal.

G. Any owner or operator authorized by this permit may request to be excluded from the coverage of this permit by applying for an individual permit. The owner or operator shall submit an individual application with reasons supporting the request, in accordance with the requirements of 40 CFR 122.28, to the Agency. The request will be granted by issuing an individual permit or an alternative general permit if the reasons cited by the owner are adequate to support the request.

H. When an individual NPDES permit is issued to an owner or operator otherwise subject to this permit, or the owner or operator is approved for coverage under an alternative NPDES general permit, the applicability of this permit to the individual NPDES permittee is automatically terminated on the issue date of the individual permit or the date of approval for coverage under the alternative general permit, whichever the case may be.

PART IV. STORM WATER MANAGEMENT PROGRAMS

A. Requirements

The permittee must develop, implement, and enforce a storm water management program designed to reduce the discharge of pollutants from their MS4 to the maximum extent practicable, to protect water quality, and to satisfy the appropriate water quality requirements of the Illinois Pollution Control Board Rules and Regulations (35 Ill. Adm. Code, Subtitle C, Chapter 1) and the Clean Water Act. The permittee's storm water management program must include the minimum control measures described in section B of this Part. For new permittees, the permittee must develop and implement specific program requirements by the date specified in the Agency's coverage letter. The U.S. Environmental Protection Agency's National Menu of Storm Water Best Management Practices (http://cfpub.epa.gov/npdes/stormwater/menuofbmps/index.cfm) and the most recent version of the Illinois Urban Manual should be consulted regarding the selection of appropriate BMPs.

B. Minimum Control Measures

The 6 minimum control measures to be included in the permittee's storm water management program are:

1. Public Education and Outreach on Storm Water Impacts

New permittees shall develop and implement elements of their storm water management program addressing the provisions listed below. Existing permittees renewing coverage under this permit shall maintain their current programs addressing this Minimum Control Measure, updating and enhancing their storm water management programs as necessary to comply with the terms of this section.

a. Distribute educational materials to the community or conduct equivalent outreach activities about the impacts of storm water discharges on water bodies and the steps that the public can take to reduce pollutants in storm water runoff. The educational materials shall include information on the potential impacts and effects on storm water discharge due to climate change. Information on climate change can be found at http://epa.gov/climatechange/. The permittee shall incorporate the following into its education materials, at a minimum:

i. Information on effective pollution prevention measures to minimize the discharge of pollutants from private property and activities into the storm sewer system, on the following topics:

A. Storage and disposal of fuels, oils and similar materials used in the operation of or leaking from, vehicles and other equipment;
B. Use of soaps, solvents or detergents used in the outdoor washing of vehicles, furniture and other property,
C. Paint and related décor;
D. Lawn and garden care; and
E. Winter de-icing material storage and use.

ii. Information about green infrastructure strategies such as green roofs, rain gardens, rain barrels, bioswales, permeable piping, dry wells, and permeable pavement that mimic natural processes and direct storm water to areas where it can be infiltrated, evaporated or reused.

iii. Information on the benefits and costs of such strategies and provide guidance to the public on how to implement them.

b. Define appropriate BMPs for this minimum control measure and measurable goals for each BMP. These measurable goals must ensure the reduction of all of the pollutants of concern in the permittee's storm water discharges to the maximum extent practicable; and

c. Provide an annual evaluation of public education and outreach BMPs and measurable goals. Report on this evaluation in the Annual Report pursuant to Part V.C.1.

2. Public Involvement/Participation

New permittees shall develop and implement elements of their storm water management program addressing the provisions listed below. Existing permittees renewing coverage under this permit shall maintain their current programs addressing this Minimum Control Measure, updating and enhancing their storm water management programs as necessary to comply with the terms of this section.

a. At a minimum, comply with State and local public notice requirements when implementing a public involvement/ participation program;

b. Define appropriate BMPs for this minimum control measure and measurable goals for each BMP, which must ensure the reduction of all of the pollutants of concern in the permittee's storm water discharges to the maximum extent practicable;

c. Provide a minimum of one public meeting annually for the public to provide input as to the adequacy of the permittee's MS4 program. This requirement may be met in conjunction with or as part of a regular council or board meeting;

d. The permittee shall identify environmental justice areas within its jurisdiction and include appropriate public involvement/participation. Information on environmental justice concerns may be found at http://www.epa.gov/environmentaljustice/. This requirement may be met in conjunction with or as part of a regular council or board meeting; and

e. Provide an annual evaluation of public involvement/participation BMPs and measurable goals. Report on this evaluation in the Annual Report pursuant to Part V.C.1.

3. Illicit Discharge Detection and Elimination

New permittees shall develop and implement elements of their storm water management program addressing the provisions listed below. Existing permittees renewing coverage under this permit shall maintain their current programs addressing this Minimum Control Measure, updating and enhancing their storm water management programs as necessary to comply with the terms of this section.

a. Develop, implement, and enforce a program to detect and eliminate illicit connections or discharges into the permittee's small MS4;

b. Develop, if not already completed, a storm sewer system map, showing the location of all outfalls and the names and location of all waters that receive discharges from those outfalls. Existing permittees renewing coverage under this permit shall update their storm sewer system map to include any modifications to the sewer system;

c. To the extent allowable under state or local law, prohibit, through ordinance, or other regulatory mechanism, non-storm water discharges into the permittee's storm sewer system and implement appropriate enforcement procedures and actions, including enforceable requirements for the prompt reporting to the MS4 of all releases, spills and other unpermitted discharges to the separate storm sewer system, and a program to respond to such reports in a timely manner;

d. Develop and implement a plan to detect and address non-storm water discharges, including illegal dumping, to the system;

e. Inform public employees, businesses, and the general public of hazards associated with illegal discharges and improper disposal of waste and the requirements and mechanisms for reporting such discharges;

f. Address the categories of non-storm water discharges listed in Section I.B.2 only if you identify them as significant contributor of pollutants to your small MS4 (discharges or flows from firefighting activities are excluded from the effective prohibition against non-storm water and need only be addressed where they are identified as significant sources of pollutants to waters of the United States);

g. Define appropriate BMPs for this minimum control measure and measurable goals for each BMP. These measurable goals must ensure the reduction of all of the pollutants of concern in your storm water discharges to the maximum extent practicable;

h. Conduct periodic inspections of the storm sewer outfalls in dry weather conditions for detection of non-storm water discharges and illegal dumping. The permittee may establish a prioritization plan for inspection of outfalls, placing priority on outfalls with the greatest potential for non-storm water discharges. Major/high priority outfalls shall be inspected at least annually; and

i. Provide an annual evaluation of illicit discharge detection and elimination BMPs and measurable goals. Report on this evaluation in the Annual Report pursuant to Part V.C.1.

4. Construction Site Storm Water Runoff Control

New permittees shall develop and implement elements of their storm water management program addressing the provisions listed below. Existing permittees renewing coverage under this permit shall maintain their current programs addressing this Minimum Control Measure, updating and enhancing their storm water management programs as necessary to comply with the terms of this section.

a. Develop, implement, and enforce a program to reduce pollutants in any storm water runoff to the permittee's small MS4 from construction activities that result in a land disturbance of greater than or equal to one acre. Control of storm water discharges from construction activity disturbing less than one acre must be included in your program if that construction activity is part of a larger common plan of development or sale that would disturb one acre or more or has been designated by the permitting authority.

At a minimum, the permittee must develop and implement the following:

i. An ordinance or other regulatory mechanism to require erosion and sediment controls, as well as sanctions to ensure compliance, to the extent allowable under state or local law;

ii. Erosion and Sediment Controls - The permittee shall ensure that construction activities regulated by the storm water program require the construction site owner/operator to design, install, and maintain effective erosion controls and sediment controls to minimize the discharge of pollutants. At a minimum, such controls must be designed, installed, and maintained to:

A. Control storm water volume and velocity within the site to minimize soil erosion;
B. Control storm water discharges, including both peak flow rates and total storm water volume, to minimize erosion at outlets and to minimize downstream channel and stream bank erosion;
C. Minimize the amount of soil exposed during construction activity;
D. Minimize the disturbance of steep slopes;
E. Minimize sediment discharges from the site. The design, installation and maintenance of erosion and sediment controls must address factors such as the amount, frequency, intensity and duration of precipitation, the nature of resulting storm water runoff, and soil characteristics, including the range of soil particle sizes expected to be present on the site;
F. Provide and maintain natural buffers around surface waters, direct storm water to vegetated areas to increase sediment removal, and maximize storm water infiltration, unless infeasible; and
G. Minimize soil compaction and preserve topsoil, unless infeasible.

iii. Requirements for construction site operators to control or prohibit non-storm water discharges that would include concrete and wastewater from washout of concrete (unless managed by an appropriate control), drywall compound, wastewater from washout and cleanout of stucco, paint, form release oils, curing compounds and other construction materials, fuels, oils, or other pollutants used in vehicle and equipment operation and maintenance, soaps, solvents, or detergents, toxic or hazardous substances from a spill or other release, or any other pollutant that could cause or tend to cause water pollution;

iv. Require all regulated construction sites to have a storm water pollution prevention plan that meets the requirements of Part IV of NPDES permit No. ILR10, including management practices, controls, and other provisions at least as protective as the requirements contained in the Illinois Urban Manual, 2014, or as amended including green infrastructure techniques where appropriate and practicable;

v. Procedures for site plan reviews which incorporate consideration of potential water quality impacts and site plan review of individual pre-construction site plans by the permittee to ensure consistency with local sediment and erosion control requirements;

vi. Procedures for receipt and consideration of information submitted by the public; and

vii. Site inspections and enforcement of ordinance provisions.

b. Define appropriate BMPs for this minimum control measure and measurable goals for each BMP. These measurable goals must ensure the reduction of all of the pollutants of concern in your storm water discharges to the maximum extent practicable.

c. Provide an annual evaluation of construction site storm water control BMPs and measureable goals in the Annual Report pursuant to Part V.C.1.

5. Post-Construction Storm Water Management in New Development and Redevelopment

New permittees shall develop and implement elements of their storm water management program addressing the provisions listed below. Existing permittees renewing coverage under this permit shall maintain their current programs addressing this Minimum Control Measure, updating and enhancing their storm water management programs, as necessary, to comply with the terms of this section.

a. Develop, implement, and enforce a program to address and minimize the volume and pollutant load of storm water runoff from projects for new development and redevelopment that disturb greater than or equal to one acre, projects less than one acre that are part of a larger common plan of development or sale or that have been designated to protect water quality, that discharge into the permittee's small MS4 within the MS4's jurisdictional control. The permittee's program must ensure that appropriate controls are in place that would protect water quality and reduce the discharge of pollutants to the maximum extent practicable. In addition, each permittee shall adopt strategies that incorporate the infiltration, reuse, and evapotranspiration of storm water into the project to the maximum extent practicable. The permittee shall also develop and implement procedures for receipt and consideration of information submitted by the public.

b. Develop and implement strategies which include a combination of structural and/or non-structural BMPs appropriate for all projects within the permittee's jurisdiction for all new development and redevelopment that disturb greater than or equal to1 acre (at a minimum) that will reduce the discharge of pollutants and the volume and velocity of storm water flow to the maximum extent practicable. These strategies shall include effective water quality and watershed protection elements and shall be amenable to modification due to climate change. Information on climate change can be found at http://www.epa.gov/climatechange/. When selecting BMPs to comply with requirements contained in this Part, the permittee shall adopt one or more of the following general strategies, listed in order of preference below. The proposal of a strategy shall include a rationale for not selecting an approach from among those with a higher preference.

   i. Preservation of the natural features of development sites, including natural storage and infiltration characteristics;

   ii. Preservation of existing natural streams, channels, and drainage ways;

   iii. Minimization of new impervious surfaces;

   iv. Conveyance of storm water in open vegetated channels;

   v. Construction of structures that provide both quantity and quality control, with structures serving multiple sites being preferable to those serving individual sites; and

   vi. Construction of structures that provide only quantity control, with structures serving multiple sites being preferable to those serving individual sites.

c. If a permittee requires new or additional approval of any development, redevelopment, linear project construction, replacement or repair on existing developed sites, or other land disturbing activity covered under this Part, the permittee shall require the person responsible for that activity to develop a long term operation and maintenance plan including the adoption of one or more of the strategies identified in Part IV.B.5.b. of this permit.

d. Develop and implement a program to minimize the volume of storm water runoff and pollutants from public highways, streets, roads, parking lots, and sidewalks (public surfaces) through the use of BMPs that alone or in combination result in physical, chemical, or biological pollutant load reduction, increased infiltration, evapotranspiration, and reuse of storm water. The program shall include, but not be limited to the following elements:

   i. Annual Training for all MS4 employees who manage or are directly involved in (or who retain others who manage or are directly involved in) the routine maintenance, repair, or replacement of public surfaces in current green infrastructure or low impact design techniques applicable to such projects; and

   ii. Annual Training for all contractors retained to manage or carry out routine maintenance, repair, or replacement of public surfaces in current green infrastructure or low impact design techniques applicable to such projects. Contractors may provide training to their employees for projects which include green infrastructure or low impact design techniques.

e. Develop and implement a program to minimize the volume of storm water runoff and pollutants from existing privately owned developed property that contributes storm water to the MS4 within the MS4 jurisdictional control. Such program must be documented and may contain the following elements:

   i. Source Identification – Establish an inventory of storm water and pollutants discharged to the MS4;

   ii. Implementation of appropriate BMPs to accomplish the following:

      A. Education on green infrastructure BMPs;
      B. Evaluation of existing flood control techniques to determine the feasibility of pollution control retrofits;
      C. Evaluation of existing flood control techniques to determine potential impacts and effects due to climate change;
      D. Implementation of additional controls for special events expected to generate significant pollution (fairs, parades, performances);
      E. Implementation of appropriate maintenance programs, (including maintenance agreements, for structural pollution control devices or systems);
      F. Management of pesticides and fertilizers; and
      G. Street cleaning in targeted areas.

f. Infiltration practices should not be implemented in any of the following circumstances:

i. Areas/sites where vehicle fueling and/or maintenance occur;

ii. Areas/sites with shallow bedrock which allow movement of pollutants into the groundwater;

iii. Areas/sites near Karst features;

iv. Areas/sites where contaminants in soil or groundwater could be mobilized by infiltration of storm water;

v. Areas/sites within a delineated source water protection area for a public drinking water supply where the potential for an introduction of pollutants into the groundwater exists. Information on groundwater protection may be found at:

http://www.epa.state.il.us/water/groundwater/index.html

vi. Areas/sites within 400 feet of a community water supply well if there is not a wellhead protection delineation area or within 200 feet of a private water supply well. Information on wellhead protection may be found at :

http://www.epa.state.il.us/water/groundwater/index.html

g. Develop and implement an ordinance or other regulatory mechanism to address post-construction runoff from new development and redevelopment projects, public surfaces, and existing developed property as set forth above to the extent allowable under state or local law.

h. Require all regulated construction sites to have post-construction management plans that meet or exceed the requirements of Part IV.D.2.h of NPDES permit No. ILR10 including management practices, controls, and other provisions at least as protective as the requirements contained in the most recent version of the Illinois Urban Manual, 2014.

i. Ensure adequate long-term operation and maintenance of BMPs.

j. Define appropriate BMPs for this minimum control measure and measurable goals for each BMP. These measurable goals must ensure the reduction of all of the pollutants of concern in your storm water discharges to the maximum extent practicable.

k. Within 3 years of the effective date of the permit, the permittee must develop and implement a process to assess the water quality impacts in the design of all new and existing flood management projects that are associated with the permittee or that discharge to the MS4. This process must include consideration of controls that can be used to minimize the impacts to site water quality and hydrology while still meeting the project objectives. This will also include assessment of any potential impacts and effects on flood management projects due to climate change.

l. Provide an annual evaluation of post-construction storm water management BMPs and measureable goals in the Annual Report pursuant to Part V.C.1 .

6. Pollution Prevention/Good Housekeeping for Municipal Operations

New permittees shall develop and implement elements of their storm water management program addressing the provisions listed below. Existing permittees renewing coverage under this permit shall maintain their current programs addressing this Minimum Control Measure, updating and enhancing their storm water management programs as necessary to comply with the terms of this section.

a. Develop and implement an operation and maintenance program that includes an annual training component for municipal staff and contractors and is designed to prevent and reduce the discharge of pollutants to the maximum extent practicable.

b. Pollution Prevention- The permittee shall design, install, implement, and maintain effective pollution prevention measures to minimize the discharge of pollutants from municipal properties, infrastructure, and operations. At a minimum, such measures must be designed, installed, implemented and maintained to:

i. Minimize the discharge of pollutants from equipment and vehicle washing, wheel wash water, and other wash waters. Wash waters must be treated in a sediment basin or alternative control that provides equivalent or better treatment prior to discharge;

ii. Minimize the exposure of building materials, building products, construction wastes, trash, landscape materials, fertilizers, pesticides, herbicides, chemical storage tanks, deicing material storage facilities and temporary stockpiles, detergents, sanitary waste, and other materials present on the site to precipitation and to storm water;

iii. Minimize the discharge of pollutants from spills and leaks and implement chemical spill and leak prevention and response procedures; and

iv. Provide regular inspection of municipal storm water management BMPs. Based on inspection findings, the permittee shall determine if repair, replacement, or maintenance measures are necessary in order to ensure the structural integrity, proper function, and treatment effectiveness of structural storm water BMPs. Necessary maintenance shall be completed as soon as conditions allow to prevent or reduce the discharge of pollutants to storm water.

c. Deicing material must be stored in a permanent or temporary storage structure or seasonal tarping must be utilized. If no permanent structures are owned or operated by the Permittee, new permanent deicing material storage structures shall be constructed within two years of the effective date of this permit. Storage structures or stockpiles shall be located and managed to minimize storm water pollutant runoff from the stockpiles or loading/unloading areas of the stockpiles. Stockpiles and loading/unloading areas should be located as far as practicable from any area storm sewer drains. Fertilizer, pesticides, or other chemicals shall be stored indoors to prevent any discharge of such chemicals within the storm water runoff.

d. Using training materials that are available from USEPA, the State of Illinois, or other organizations, the permittee's program must include annual employee training to prevent and reduce storm water pollution from activities such as park and open space maintenance, fleet and building maintenance, operation of storage yards, snow disposal, deicing material storage handling and use on roadways, new construction and land disturbances, and storm water system maintenance procedures for proper disposal of street cleaning debris and catch basin material. In addition, training should include how flood management projects impact water quality, non-point source pollution control, green infrastructure controls, and aquatic habitat.

e. Define appropriate BMPs for this minimum control measure and measurable goals for each BMP. These measurable goals must ensure the reduction of all of the pollutants of concern in your storm water discharges to the maximum extent practicable.

f. Provide an annual evaluation of pollution prevention/good housekeeping for municipal operations and measureable goals in the Annual Report pursuant to Part V.C.1.

C. Qualifying State, County, or Local Program

If an existing qualifying local program requires a permittee to implement one or more of the minimum control measures of Part IV. B. above, the permittee may follow that qualifying program's requirements rather than the requirements of Part IV.B. above. A qualifying local program is a local, county, or state municipal storm water management program that imposes, at a minimum, the relevant requirements of Part IV. B. Any qualifying local programs that permittees intend to follow shall be specified in their storm water management program.

D. Sharing Responsibility

1. Implementation of one or more of the minimum control measures may be shared with another entity, or the entity may fully take over the control measure. A permittee may rely on another entity only if:

a. The other entity implements the control measure;

b. The particular control measure, or component of that measure is at least as stringent as the corresponding permit requirement;

c. The other entity agrees to implement any minimum control measure on the permittee's behalf. A written agreement of this obligation is recommended. This obligation must be maintained as part of the description of the permittee's Storm Water Management Program. If the other entity agrees to report on the minimum control measure, the permittee must supply the other entity with the reporting requirements contained in Part V.C of this permit. If the other entity fails to implement the minimum control measure on the permittee's behalf, then the permittee remains liable for any discharges due to that failure to implement the minimum control measure.

E. Reviewing and Updating Storm Water Management Programs

1. Storm Water Management Program Review- The permittee must perform an annual review of its Storm Water Management Program in conjunction with preparation of the annual report required under Part V.C. The permittee must include in its annual report a plan for complying with any changes or new provisions in this permit, or in any State or federal regulations. The permittee must also include in its annual report a plan for complying with all applicable TMDL Report(s) or watershed management plan(s). Information on TMDLs may be found at:

http://www.epa.state.il.us/water/tmdl/.

2. Storm Water Management Program Update - The permittee may modify its Storm Water Management Program during the life of the permit in accordance with the following procedures:

a. Modifications adding (but not subtracting or replacing) components, controls, or requirements to the Storm Water Management Program may be made at any time upon written notification to the Agency;

b. Modifications replacing an ineffective or infeasible BMP specifically identified in the Storm Water Management Program with an alternate BMP may be requested at any time. Unless denied by the Agency, modifications proposed in accordance with the criteria below shall be deemed approved and may be implemented 60 days from submittal of the request. If the request is denied, the Agency will send the permittee a written response giving a reason for the decision. The permittee's modification requests must include the following:

i. An analysis of why the BMP is ineffective or infeasible (including cost prohibitive);

ii. Expectations on the effectiveness of the replacement BMP; and

iii. An analysis of why the replacement BMP is expected to achieve the goals of the BMP to be replaced.

c. Modification of any ordinances relative to the storm water management program, provided the updated ordinance is at least as stringent as the provisions stipulated in this permit; and

d. Modification requests or notifications must be made in writing and signed in accordance with Standard Condition II of Attachment H.

3. Storm Water Management Program Updates Required by the Agency. Modifications requested by the Agency must be made in writing, set forth the time schedule for permittees to develop the modifications, and offer permittees the opportunity to propose alternative program modifications to meet the objective of the requested modification. All modifications required by the Permitting Authority will be made in accordance with 40 CFR 124.5, 40 CFR 122.62, or as appropriate 40 CFR 122.63. The Agency may require modifications to the Storm Water Management Program as needed to:

a. Address impacts on receiving water quality caused, or contributed to, by discharges from the MS4;

b. Include more stringent requirements necessary to comply with new federal or State statutory or regulatory requirements; or

c. Include such other conditions deemed necessary by the Agency to comply with the goals and requirements of the Clean Water Act.

PART V. MONITORING, RECORDKEEPING, AND REPORTING

A. Monitoring

The permittee must develop and implement a monitoring and assessment program to evaluate the effectiveness of the BMPs being implemented to reduce pollutant loadings and water quality impacts within 180 days of the effective date of this permit. The program should be tailored to the size and characteristics of the MS4 and the watershed. The permittee shall provide a justification of its monitoring and assessment program in the Annual Report. By not later than 180 days after the effective date of this permit, the permittee shall initiate an evaluation of its storm water program. The plan for monitoring/evaluation shall be described in the Annual Report. Evaluation and/or monitoring results shall be provided in the Annual Report. The monitoring and assessment program may include evaluation of BMPs and/or direct water quality monitoring as follows:

1. An evaluation of BMPs based on estimated effectiveness from published research accompanied by an inventory of the number and location of BMPs implemented as part of the permittee's program and an estimate of pollutant reduction resulting from the BMPs, or

2. Monitoring the effectiveness of storm water control measures and progress towards the MS4's goals using one or more of the following:

a. MS4 permittees serving a population of less than 25,000 may conduct visual observations of the storm water discharge documenting color, odor, clarity, floating solids, settled solids, suspended solids, foam, oil sheen, or other obvious indicators of storm water pollution; or

b. MS4 permittees may evaluate storm water quality and impacts using one or more of the following methods;

i. Instream monitoring in the highest level hydrological unit code segment in the MS4 area. Monitoring shall include, at a minimum, quarterly monitoring of receiving waters upstream and downstream of the MS4 discharges in the designated stream(s).

ii. Measuring pollutant concentrations over time.

iii. Sediment monitoring.

iv. Short-term extensive network monitoring. Short-term sampling at the outlets of numerous drainage areas to identify water quality issues and potential storm water impacts, and may help in ranking areas for implementation priority. Data collected simultaneously across the MS4 to help characterize the geographical distribution of pollutant sources.

v. Site-specific monitoring. High-value resources such as swimming beaches, shellfish beds, or high-priority habitats could warrant specific monitoring to assess the status of use support. Similarly, known high-priority pollutant sources or impaired water bodies with contaminated aquatic sediments, an eroding stream channel threatening property, or a stream reach with a degraded fish population could be monitored to assess impacts of storm water discharges and/or to identify improvements that result from the implementation of BMPs.

vi. Assessing physical/habitat characteristics such as stream bank erosion caused by storm water discharges.

vii. Outfall/Discharge monitoring.

viii. Sewershed-focused monitoring. Monitor for pollutants in storm water produced in different areas of the MS4. For example, identify which pollutants are present in storm water from industrial areas, commercial areas, and residential areas.

ix. BMP performance monitoring. Monitoring of individual BMP performance to provide a direct measure of the pollutant reduction efficiency of these key components of a MS4 program.

x. Collaborative watershed-scale monitoring. The permittee may choose to work collaboratively with other permittees and/or a watershed group to design and implement a watershed or sub-watershed-scale monitoring program that assesses the water quality of the water bodies and the sources of pollutants. Such programs must include elements which assess the impacts of the permittee's storm water discharges and/or the effectiveness of the BMPs being implemented.

c. If ambient water quality monitoring under 2b above is performed, the monitoring of storm water discharges and ambient monitoring intended to gauge storm water impacts shall be performed within 48 hours of a precipitation event greater than or equal to one quarter inch in a 24-hour period. At a minimum, analysis of storm water discharges or ambient water quality shall include the following parameters: total suspended solids, total nitrogen, total phosphorous, fecal coliform, chlorides, and oil and grease. In addition, monitoring shall be performed for any other pollutants associated with storm water runoff for which the receiving water is considered impaired pursuant to the most recently approved list under Section 303(d) of the Clean Water Act.

B. Recordkeeping

The permittee must keep records required by this permit for 5 years after the expiration of this permit. Records to be kept under this Part include the permittee's NOI, storm water management plan, annual reports, and monitoring data. All records shall be kept onsite or locally available and shall be made accessible to the Agency for review at the time of an on-site inspection. Except as otherwise provided in this permit, permittees must submit records to the Agency only when specifically requested to do so. Permittees must post their NOI, storm water management program plan, and annual reports on the permittee's website. The permittee must make its records available to the public at reasonable times during regular business hours. The permittee may require a member of the public to provide advance notice, in accordance with the applicable Freedom of Information Act requirements. Storm sewer maps may be withheld for security reasons.

C. Reporting

The permittee must submit Annual Reports to the Agency by the first day of June for each year that this permit is in effect. If the permittee maintains a website, a copy of the Annual Report shall be posted on the website by the first day of June of each year. Each Report shall cover the period from March of the previous year through March of the current year. Annual Reports shall be maintained on the permittees' website for a period of 5 years. The Report must include:

1. An assessment of the appropriateness and effectiveness of the permittee's identified BMPs and progress towards achieving the statutory goal of reducing the discharge of pollutants to the maximum extent practicable (MEP), and the permittee's identified measurable goals for each of the minimum control measures;

2. The status of compliance with permit conditions, including a description of each incidence of non-compliance with the permit, and the permittee's plan for achieving compliance with a timeline of actions taken or to be taken;

3. Results of information collected and analyzed, including monitoring data, if any, during the reporting period;

4. A summary of the storm water activities the permittee plans to undertake during the next reporting cycle, including an implementation schedule;

5. A change in any identified BMPs or measurable goals that apply to the program elements;

6. Notice that the permittee is relying on another government entity to satisfy some of the permit obligations (if applicable);

7. Provide an updated summary of any BMP or adaptive management strategy constructed or implemented pursuant to any approved TMDL or alternate water quality management study. Use the results of your monitoring program to assess whether the WLA or other performance requirements for storm water discharges from your MS4 are being met; and

8. If a qualifying local program or programs with shared responsibilities is implementing all minimum control measures on behalf of one or more entities, then the local qualifying program or programs with shared responsibilities may submit a report on behalf of itself and any entities for which it is implementing all of the minimum control measures.

The Annual Reports shall be submitted to the following office and email addresses:

Illinois Environmental Protection Agency
Division of Water Pollution Control
Compliance Assurance Section
Municipal Annual Inspection Report
1021 North Grand Avenue East
P.O. Box 19276
Springfield, Illinois 62794-9276

epa.ms4annualinsp@illinois.gov

PART VI. DEFINITIONS AND ACRONYMS

All definitions contained in Section 502 of the Clean Water Act, 40 CFR 122, and 35 Ill. Adm. Code 309 shall apply to this permit and are incorporated herein by reference. For convenience, simplified explanations of some regulatory/statutory definitions have been provided. In the event of a conflict, the definition found in the statute or regulation takes precedence.

Best Management Practices (BMPs) means structural or nonstructural controls, schedules of activities, prohibitions of practices, maintenance procedures, and other management practices to prevent or reduce the pollution of waters of the state. BMPs also include treatment requirements, operating procedures, and practices to control runoff, spillage or leaks, sludge or waste disposal, or drainage from raw material storage.

BMP is an acronym for "Best Management Practices."

CFR is an acronym for "Code of Federal Regulations."

Control Measure as used in this permit refers to any Best Management Practice or other method used to prevent or reduce storm water runoff or the discharge of pollutants to waters of the State.

CWA or The Act means the Clean Water Act (formerly referred to as the Federal Water Pollution Control Act or Federal Water Pollution Control Act Amendments of 1972) Pub. L. 92-500, as amended Pub. L. 95-217, Pub. L. 95-576, Pub. L. 96-483 and Pub. L. 97-117, 33 U.S.C. 1251 ET. seq.

Discharge when used without a qualifier, refers to discharge of a pollutant as defined at 40 CFR 122.2.

Environmental Justice (EJ) means the fair treatment and meaningful involvement of all people regardless of race, color, national origin, or income with respect to the development, implementation, and enforcement of environmental laws, regulations, and policies

Environmental Justice Area means a community with a low-income and/or minority population greater than twice the statewide average. In addition, a community may be considered a potential EJ community if the low-income and/or minority population is less than twice the state-wide average but greater than the statewide average and it has identified itself as an EJ community. If the low-income and/or minority population percentage is equal to or less than the statewide average, the community should not be considered a potential EJ community.

Flood management project means any project which is intended to control, reduce or minimize high stream flows and associated damage. This may also include projects designed to mimic or improve natural conditions in the waterway.

Green Infrastructure means wet weather management approaches and technologies that utilize, enhance or mimic the natural hydrologic cycle processes of infiltration, evapotranspiration and reuse. Green infrastructure approaches currently in use include green roofs, trees and tree boxes, rain gardens, vegetated swales, pocket wetlands, infiltration planters, porous and permeable pavements, porous piping systems, dry wells, vegetated median strips, reforestation/revegetation, rain barrels, cisterns, and protection and enhancement of riparian buffers and floodplains.

Illicit Connection means any man-made conveyance connecting an illicit discharge directly to a municipal separate storm sewer.

Illicit Discharge is defined at 40 CFR 122.26(b)(2) and refers to any discharge to a municipal separate storm sewer that is not composed entirely of storm water, except discharges authorized under an NPDES permit (other than the NPDES permit for discharges from the MS4) and discharges resulting from fire fighting activities.

MEP is an acronym for "Maximum Extent Practicable," the technology-based discharge standard for Municipal Separate Storm Sewer Systems to reduce pollutants in storm water discharges that was established by CWA Section 402(p). A discussion of MEP as it applies to small MS4s is found at 40 CFR 122.34.

MS4 is an acronym for "Municipal Separate Storm Sewer System" and is used to refer to a Large, Medium, or Small Municipal Separate Storm Sewer System (e.g. "the Dallas MS4"). The term is used to refer to either the system operated by a single entity or a group of systems within an area that are operated by multiple entities (e.g., the Houston MS4 includes MS4s operated by the city of Houston, the Texas Department of Transportation, the Harris County Flood Control District, Harris County, and others).

Municipal Separate Storm Sewer is defined at 40 CFR 122.26(b)(8) and means a conveyance or system of conveyances (including roads with drainage systems, municipal streets, catch basins, curbs, gutters, ditches, man-made channels, or storm drains): (i) Owned or operated by a State, city, town, borough, county, parish, district, association, or other public body (created by or pursuant to State law) having jurisdiction over disposal of sewage, industrial wastes, storm water, or other wastes, including special districts under State law such as a sewer district, flood control district or drainage district, or similar entity, or an Indian tribe or an authorized Indian tribal organization, or a designated and approved management agency under Section 208 of the CWA that discharges to waters of the United States; (ii) Designed or used for collecting or conveying storm water; (iii) Which is not a combined sewer; and (iv) Which is not part of a Publicly Owned Treatment Works (POTW) as defined at 40 CFR 122.2.

NOI is an acronym for "Notice of Intent" to be covered by this permit and is the mechanism used to "register" for coverage under a general permit.

NPDES is an acronym for "National Pollutant Discharge Elimination System."

Outfall is defined at 40 CFR 122.26(b) (9) and means a point source as defined by 40 CFR 122.2 at the point where a municipal separate storm sewer discharges to waters of the United States and does not include open conveyances connecting two municipal storm sewers, or pipes, tunnels or other conveyances which connect segments of the same stream or other waters of the United States and are used to convey waters of the United States.

Owner or Operator is defined at 40 CFR 122.2 and means the owner or operator of any "facility or activity" subject to regulation under the NPDES program.

Permitting Authority means the Illinois EPA.

Point Source is defined at 40 CFR 122.2 and means any discernable, confined and discrete conveyance, including but not limited to, any pipe, ditch, channel, tunnel, conduit, well, discrete fissure, container, rolling stock, concentrated animal feeding operation, landfill leachate collection system, vessel or other floating craft from which pollutants are or may be discharged. This term does not include return flows from irrigated agriculture or agricultural storm water runoff.

Pollutants of Concern means pollutants identified in a TMDL waste load allocation (WLA) or on the Section 303(d) list for the receiving water, and any of the pollutants for which water monitoring is required in Part V.A. of this permit.

Qualifying Local Program is defined at 40 CFR 122.34(c) and means a local, state, or Tribal municipal storm water management program that imposes, at a minimum, the relevant requirements of paragraph (b) of Section 122.34.

Small Municipal Separate Storm Sewer System is defined at 40 CFR 122.26(b)(16) and refers to all separate storm sewers that are owned or operated by the United States, a State [sic], city, town, borough, county, parish, district, association, or other public body (created by or pursuant to State [sic] law) having jurisdiction over disposal of sewage, industrial wastes, storm water, or other wastes, including special districts under State law such as a sewer district, flood control district or drainage district, or similar entity, or an Indian tribe or an authorized Indian tribal organization, or a designated and approved management agency under Section 208 of the CWA that discharges to waters of the United States, but is not defined as "large" or "medium" municipal separate storm sewer system. This term includes systems similar to separate storm sewer systems in municipalities, such as systems at military bases, large hospital or prison complexes, and highways and other thoroughfares. The term does not include separate storm sewers in very discrete areas, such as individual buildings.

Storm Water is defined at 40 CFR 122.26(b) (13) and means storm water runoff, snowmelt runoff, and surface runoff and drainage.

Storm Water Management Program (SWMP) refers to a comprehensive program to manage the quality of storm water discharged from the municipal separate storm sewer system.

SWMP is an acronym for "Storm Water Management Program."

TMDL is an acronym for "Total Maximum Daily Load."

Waters (also referred to as waters of the state or receiving water) is defined at Section 301.440 of Title 35: Subtitle C: Chapter I of the Illinois Pollution Control Board Regulations and means all accumulations of water, surface and underground, natural, and artificial, public and private, or parts thereof, which are wholly or partially within, flow through, or border upon the State of Illinois, except that sewers and treatment works are not included except as specially mentioned; provided, that nothing herein contained shall authorize the use of natural or otherwise protected waters as sewers or treatment works except that in-stream aeration under Agency permit is allowable.

"You" and "Your" as used in this permit is intended to refer to the permittee, the operator, or the discharger as the context indicates and that party's responsibilities (e.g., the city, the country, the flood control district, the U.S. Air Force, etc.).

Attachment H

Standard Conditions

Definitions

Act means the Illinois Environmental Protection Act, 415 ILCS 5 as Amended.

Agency means the Illinois Environmental Protection Agency.

Board means the Illinois Pollution Control Board.

Clean Water Act (formerly referred to as the Federal Water Pollution Control Act) means Pub. L 92-500, as amended. 33 U.S.C. 1251 et seq.

NPDES (National Pollutant Discharge Elimination System) means the national program for issuing, modifying, revoking and reissuing, terminating, monitoring and enforcing permits, and imposing and enforcing pretreatment requirements, under Sections 307, 402, 318 and 405 of the Clean Water Act.

USEPA means the United States Environmental Protection Agency.

Daily Discharge means the discharge of a pollutant measured during a calendar day or any 24-hour period that reasonably represents the calendar day for purposes of sampling. For pollutants with limitations expressed in units of mass, the "daily discharge" is calculated as the total mass of the pollutant discharged over the day. For pollutants with limitations expressed in other units of measurements, the "daily discharge" is calculated as the average measurement of the pollutant over the day.

Maximum Daily Discharge Limitation (daily maximum) means the highest allowable daily discharge.

Average Monthly Discharge Limitation (30 day average) means the highest allowable average of daily discharges over a calendar month, calculated as the sum of all daily discharges measured during a calendar month divided by the number of daily discharges measured during that month.

Average Weekly Discharge Limitation (7 day average) means the highest allowable average of daily discharges over a calendar week, calculated as the sum of all daily discharges measured during a calendar week divided by the number of daily discharges measured during that week.

Best Management Practices (BMPs) means schedules of activities, prohibitions of practices, maintenance procedures, and other management practices to prevent or reduce the pollution of waters of the State. BMPs also include treatment requirements, operating procedures, and practices to control plant site runoff, spillage or leaks, sludge or waste disposal, or drainage from raw material storage.

Aliquot means a sample of specified volume used to make up a total composite sample.

Grab Sample means an individual sample of at least 100 milliliters collected at a randomly-selected time over a period not exceeding 15 minutes.

24-Hour Composite Sample means a combination of at least 8 sample aliquots of at least 100 milliliters, collected at periodic intervals during the operating hours of a facility over a 24-hour period.

8-Hour Composite Sample means a combination of at least 3 sample aliquots of at least 100 milliliters, collected at periodic intervals during the operating hours of a facility over an 8-hour period.

Flow Proportional Composite Sample means a combination of sample aliquots of at least 100 milliliters collected at periodic intervals such that either the time interval between each aliquot or the volume of each aliquot is proportional to either the stream flow at the time of sampling or the total stream flow since the collection of the previous aliquot.

(1) **Duty to comply.** The permittee must comply with all conditions of this permit. Any permit noncompliance constitutes a violation of the Act and is grounds for enforcement action, permit termination, revocation and reissuance, modification, or for denial of a permit renewal application. The permittee shall comply with effluent standards or prohibitions established under Section 307(a) of the Clean Water Act for toxic pollutants within the time provided in the regulations that establish these standards or prohibitions, even if the permit has not yet been modified to incorporate the requirements.

(2) **Duty to reapply.** If the permittee wishes to continue an activity regulated by this permit after the expiration date of this permit, the permittee must apply for and obtain a new permit. If the permittee submits a proper application as required by the Agency no later than 180 days prior to the expiration date, this permit shall continue in full force and effect until the final Agency decision on the application has been made.

(3) **Need to halt or reduce activity not a defense.** It shall not be a defense for a permittee in an enforcement action that it would have been necessary to halt or reduce the permitted activity in order to maintain compliance with the conditions of this permit.

(4) **Duty to mitigate.** The permittee shall take all reasonable steps to minimize or prevent any discharge in violation of this permit which has a reasonable likelihood of adversely affecting human health or the environment.

(5) **Proper operation and maintenance.** The permittee shall at all times properly operate and maintain all facilities and systems of treatment and control (and related appurtenances) which are installed or used by the permittee to achieve compliance with conditions of this permit. Proper operation and maintenance includes effective performance, adequate funding, adequate operator staffing and training, and adequate laboratory and process controls, including appropriate quality assurance procedures. This provision requires the operation of back-up, or auxiliary facilities, or similar systems only when necessary to achieve compliance with the conditions of the permit.

(6) **Permit actions.** This permit may be modified, revoked and reissued, or terminated for cause by the Agency pursuant to 40 CFR 122.62 and 40 CFR 122.63. The filing of a request by the permittee for a permit modification, revocation and reissuance, or termination, or a notification of planned changes or anticipated noncompliance, does not stay any permit condition.

(7) **Property rights.** This permit does not convey any property rights of any sort, or any exclusive privilege.

(8) **Duty to provide information.** The permittee shall furnish to the Agency within a reasonable time, any information which the Agency may request to determine whether cause exists for modifying, revoking and reissuing, or terminating this permit, or to determine compliance with the permit. The permittee shall also furnish to the Agency upon request, copies of records required to be kept by this permit.

(9) **Inspection and entry.** The permittee shall allow an authorized representative of the Agency or USEPA (including an authorized contractor acting as a representative of the Agency or USEPA), upon the presentation of credentials and other documents as may be required by law, to:

(a) Enter upon the permittee's premises where a regulated

facility or activity is located or conducted, or where records must be kept under the conditions of this permit;

(b) Have access to and copy, at reasonable times, any records that must be kept under the conditions of this permit;

(c) Inspect at reasonable times any facilities, equipment (including monitoring and control equipment), practices, or operations regulated or required under this permit; and

(d) Sample or monitor at reasonable times, for the purpose of assuring permit compliance, or as otherwise authorized by the Act, any substances or parameters at any location.

(10) **Monitoring and records.**

(a) Samples and measurements taken for the purpose of monitoring shall be representative of the monitored activity.

(b) The permittee shall retain records of all monitoring information, including all calibration and maintenance records, and all original strip chart recordings for continuous monitoring instrumentation, copies of all reports required by this permit, and records of all data used to complete the application for this permit, for a period of at least 3 years from the date of this permit, measurement, report or application. Records related to the permittee's sewage sludge use and disposal activities shall be retained for a period of at least five years (or longer as required by 40 CFR Part 503). This period may be extended by request of the Agency or USEPA at any time.

(c) Records of monitoring information shall include:

(1) The date, exact place, and time of sampling or measurements;

(2) The individual(s) who performed the sampling or measurements;

(3) The date(s) analyses were performed;

(4) The individual(s) who performed the analyses;

(5) The analytical techniques or methods used; and

(6) The results of such analyses.

(d) Monitoring must be conducted according to test procedures approved under 40 CFR Part 136, unless other test procedures have been specified in this permit. Where no test procedure under 40 CFR Part 136 has been approved, the permittee must submit to the Agency a test method for approval. The permittee shall calibrate and perform maintenance procedures on all monitoring and analytical instrumentation at intervals to ensure accuracy of measurements.

(11) **Signatory requirement.** All applications, reports or information submitted to the Agency shall be signed and certified.

(a) **Application.** All permit applications shall be signed as follows:

(1) For a corporation: by a principal executive officer of at least the level of vice president or a person or position having overall responsibility for environmental matters for the corporation:

(2) For a partnership or sole proprietorship: by a general partner or the proprietor, respectively; or

(3) For a municipality, State, Federal, or other public agency: by either a principal executive officer or ranking elected official.

(b) **Reports.** All reports required by permits, or other information requested by the Agency shall be signed by a person described in paragraph (a) or by a duly authorized representative of that person. A person is a duly authorized representative only if:

(1) The authorization is made in writing by a person described in paragraph (a); and

(2) The authorization specifies either an individual or a position responsible for the overall operation of the facility, from which the discharge originates, such as a plant manager, superintendent or person of equivalent responsibility; and

(3) The written authorization is submitted to the Agency.

(c) **Changes of Authorization.** If an authorization under (b) is no longer accurate because a different individual or position has responsibility for the overall operation of the facility, a new authorization satisfying the requirements of (b) must be submitted to the Agency prior to or together with any reports, information, or applications to be signed by an authorized representative.

(d) **Certification.** Any person signing a document under paragraph (a) or (b) of this section shall make the following certification:

I certify under penalty of law that this document and all attachments were prepared under my direction or supervision in accordance with a system designed to assure that qualified personnel properly gather and evaluate the information submitted. Based on my inquiry of the person or persons who manage the system, or those persons directly responsible for gathering the information, the information submitted is, to the best of my knowledge and belief, true, accurate, and complete. I am aware that there are significant penalties for submitting false information, including the possibility of fine and imprisonment for knowing violations.

(12) **Reporting requirements.**

(a) **Planned changes.** The permittee shall give notice to the Agency as soon as possible of any planned physical alterations or additions to the permitted facility.
Notice is required when:

(1) The alteration or addition to a permitted facility may meet one of the criteria for determining whether a facility is a new source pursuant to 40 CFR 122.29 (b); or

(2) The alteration or addition could significantly change the nature or increase the quantity of pollutants discharged. This notification applies to pollutants which are subject neither to effluent limitations in the permit, nor to notification requirements pursuant to 40 CFR 122.42 (a)(1).

(3) The alteration or addition results in a significant change in the permittee's sludge use or disposal practices, and such alteration, addition, or change may justify the application of permit conditions that are different from or absent in the existing permit, including notification of additional use or disposal sites not reported during the permit application process or not reported pursuant to an approved land application plan.

(b) **Anticipated noncompliance.** The permittee shall give advance notice to the Agency of any planned changes in the permitted facility or activity which may result in noncompliance with permit requirements.

(c) **Transfers.** This permit is not transferable to any person except after notice to the Agency.

(d) **Compliance schedules.** Reports of compliance or noncompliance with, or any progress reports on, interim and final requirements contained in any compliance schedule of this permit shall be submitted no later than 14 days following each schedule date.

(e) **Monitoring reports.** Monitoring results shall be reported at the intervals specified elsewhere in this permit.

(1) Monitoring results must be reported on a Discharge Monitoring Report (DMR).

(2) If the permittee monitors any pollutant more frequently than required by the permit, using test procedures approved under 40 CFR 136 or as specified in the permit, the results of this monitoring shall be included in the calculation and reporting of the data submitted in the DMR.

(3) Calculations for all limitations which require averaging of measurements shall utilize an arithmetic mean unless otherwise specified by the Agency in the permit.

(f) **Twenty-four hour reporting.** The permittee shall report any noncompliance which may endanger health or the environment. Any information shall be provided orally within 24-hours from the time the permittee becomes aware of the circumstances. A written submission shall also be provided within 5 days of the time the permittee becomes aware of the circumstances. The written submission shall contain a description of the noncompliance and its cause; the period of noncompliance, including exact dates and time; and if the noncompliance has not been corrected, the anticipated time it is expected to continue; and steps taken or planned to reduce, eliminate, and prevent reoccurrence of the noncompliance. The following shall be included as information which must be reported within 24-hours:

(1) Any unanticipated bypass which exceeds any effluent limitation in the permit.

(2) Any upset which exceeds any effluent limitation in the permit.

(3) Violation of a maximum daily discharge limitation for any of the pollutants listed by the Agency in the permit or any pollutant which may endanger health or the environment.

The Agency may waive the written report on a case-by-case basis if the oral report has been received within 24-hours.

(g) **Other noncompliance.** The permittee shall report all instances of noncompliance not reported under paragraphs (12) (d), (e), or (f), at the time monitoring reports are submitted. The reports shall contain the information listed in paragraph (12) (f).

(h) **Other information.** Where the permittee becomes aware that it failed to submit any relevant facts in a permit application, or submitted incorrect information in a permit application, or in any report to the Agency, it shall promptly submit such facts or information.

(13) **Bypass.**

(a) Definitions.

(1) Bypass means the intentional diversion of waste streams from any portion of a treatment facility.

(2) Severe property damage means substantial physical damage to property, damage to the treatment facilities which causes them to become inoperable, or substantial and permanent loss of natural resources which can reasonably be expected to occur in the absence of a bypass. Severe property damage does not mean economic loss caused by delays in production.

(b) Bypass not exceeding limitations. The permittee may allow any bypass to occur which does not cause effluent limitations to be exceeded, but only if it also is for essential maintenance to assure efficient operation. These bypasses are not subject to the provisions of paragraphs (13)(c) and (13)(d).

(c) Notice.

(1) Anticipated bypass. If the permittee knows in advance of the need for a bypass, it shall submit prior notice, if possible at least ten days before the date of the bypass.

(2) Unanticipated bypass. The permittee shall submit notice of an unanticipated bypass as required in paragraph (12)(f) (24-hour notice).

(d) Prohibition of bypass.

(1) Bypass is prohibited, and the Agency may take enforcement action against a permittee for bypass, unless:

(i) Bypass was unavoidable to prevent loss of life, personal injury, or severe property damage;

(ii) There were no feasible alternatives to the bypass, such as the use of auxiliary treatment facilities, retention of untreated wastes, or maintenance during normal periods of equipment downtime. This condition is not satisfied if adequate back-up equipment should have been installed in the exercise of reasonable engineering judgment to prevent a bypass which occurred during normal periods of equipment downtime or preventive maintenance; and

(iii) The permittee submitted notices as required under paragraph (13)(c).

(2) The Agency may approve an anticipated bypass, after considering its adverse effects, if the Agency determines that it will meet the three conditions listed above in paragraph (13)(d)(1).

(14) **Upset.**

(a) Definition. Upset means an exceptional incident in which there is unintentional and temporary noncompliance with technology based permit effluent limitations because of factors beyond the reasonable control of the permittee. An upset does not include noncompliance to the extent caused by operational error, improperly designed treatment facilities, inadequate treatment facilities, lack of preventive maintenance, or careless or improper operation.

(b) Effect of an upset. An upset constitutes an affirmative defense to an action brought for noncompliance with such technology based permit effluent limitations if the requirements of paragraph (14)(c) are met. No determination made during administrative review of claims that noncompliance was caused by upset, and before an action for noncompliance, is final administrative action subject to judicial review.

(c) Conditions necessary for a demonstration of upset. A permittee who wishes to establish the affirmative defense of upset shall demonstrate, through properly signed, contemporaneous operating logs, or other relevant evidence that:

(1) An upset occurred and that the permittee can identify the cause(s) of the upset;

(2) The permitted facility was at the time being properly operated; and

(3) The permittee submitted notice of the upset as required in paragraph (12)(f)(2) (24-hour notice).

(4) The permittee complied with any remedial measures required under paragraph (4).

(d) Burden of proof. In any enforcement proceeding the permittee seeking to establish the occurrence of an upset has the burden of proof.

(15) **Transfer of permits.** Permits may be transferred by modification or automatic transfer as described below:

(a) Transfers by modification. Except as provided in paragraph (b), a permit may be transferred by the permittee to a new owner or operator only if the permit has been modified or revoked and reissued pursuant to 40 CFR 122.62 (b) (2), or a minor modification made pursuant to 40 CFR 122.63 (d), to identify the new permittee and incorporate such other requirements as may be necessary under the Clean Water Act.

(b) Automatic transfers. As an alternative to transfers under paragraph (a), any NPDES permit may be automatically transferred to a new permittee if:

(1) The current permittee notifies the Agency at least 30 days in advance of the proposed transfer date;

(2) The notice includes a written agreement between the existing and new permittees containing a specified date for transfer of permit responsibility, coverage and liability between the existing and new permittees; and

(3) The Agency does not notify the existing permittee and the proposed new permittee of its intent to modify or revoke and reissue the permit. If this notice is not received, the transfer is effective on the date specified in the agreement.

(16) All manufacturing, commercial, mining, and silvicultural dischargers must notify the Agency as soon as they know or have reason to believe:

(a) That any activity has occurred or will occur which would result in the discharge of any toxic pollutant identified under Section 307 of the Clean Water Act which is not limited in the permit, if that discharge will exceed the highest of the following notification levels:

(1) One hundred micrograms per liter (100 ug/l);

(2) Two hundred micrograms per liter (200 ug/l) for acrolein and acrylonitrile; five hundred micrograms per liter (500 ug/l) for 2,4-dinitrophenol and for 2-methyl-4,6 dinitrophenol; and one milligram per liter (1 mg/l) for antimony.

(3) Five (5) times the maximum concentration value reported for that pollutant in the NPDES permit application; or

(4) The level established by the Agency in this permit.

(b) That they have begun or expect to begin to use or manufacture as an intermediate or final product or byproduct any toxic pollutant which was not reported in the NPDES permit application.

(17) All Publicly Owned Treatment Works (POTWs) must provide adequate notice to the Agency of the following:

(a) Any new introduction of pollutants into that POTW from an indirect discharge which would be subject to Sections 301 or 306 of the Clean Water Act if it were directly discharging those pollutants; and

(b) Any substantial change in the volume or character of pollutants being introduced into that POTW by a source introducing pollutants into the POTW at the time of issuance of the permit.

(c) For purposes of this paragraph, adequate notice shall include information on (i) the quality and quantity of effluent introduced into the POTW, and (ii) any anticipated impact of the change on the quantity or quality of effluent to be discharged from the POTW.

(18) If the permit is issued to a publicly owned or publicly regulated treatment works, the permittee shall require any industrial user of such treatment works to comply with federal requirements concerning:

(a) User charges pursuant to Section 204 (b) of the Clean Water Act, and applicable regulations appearing in 40 CFR 35;

(b) Toxic pollutant effluent standards and pretreatment standards pursuant to Section 307 of the Clean Water Act; and

(c) Inspection, monitoring and entry pursuant to Section 308 of the Clean Water Act.

(19) If an applicable standard or limitation is promulgated under Section 301(b)(2)(C) and (D), 304(b)(2), or 307(a)(2) and that effluent standard or limitation is more stringent than any effluent limitation in the permit, or controls a pollutant not limited in the permit, the permit shall be promptly modified or revoked, and reissued to conform to that effluent standard or limitation.

(20) Any authorization to construct issued to the permittee pursuant to 35 Ill. Adm. Code 309.154 is hereby incorporated by reference as a condition of this permit.

(21) The permittee shall not make any false statement, representation or certification in any application, record, report, plan or other document submitted to the Agency or the USEPA, or required to be maintained under this permit.

(22) The Clean Water Act provides that any person who violates a permit condition implementing Sections 301, 302, 306, 307, 308, 318, or 405 of the Clean Water Act is subject to a civil penalty not to exceed $25,000 per day of such violation. Any person who willfully or negligently violates permit conditions implementing Sections 301, 302, 306, 307, 308, 318 or 405 of the Clean Water Act is subject to a fine of not less than $2,500 nor more than $25,000 per day of violation, or by imprisonment for not more than one year, or both.
Additional penalties for violating these sections of the Clean Water Act are identified in 40 CFR 122.41 (a)(2) and (3).

(23) The Clean Water Act provides that any person who falsifies, tampers with, or knowingly renders inaccurate any monitoring device or method required to be maintained under this permit shall, upon conviction, be punished by a fine of not more than $10,000, or by imprisonment for not more than 2 years, or both. If a conviction of a person is for a violation committed after a first conviction of such person under this paragraph, punishment is a fine of not more than $20,000 per day of violation, or by imprisonment of not more than 4 years, or both.

(24) The Clean Water Act provides that any person who knowingly makes any false statement, representation, or certification in any record or other document submitted or required to be maintained under this permit, including monitoring reports or reports of compliance or non-compliance shall, upon conviction, be punished by a fine of not more than $10,000 per violation, or by imprisonment for not more than 6 months per violation, or by both.

(25) Collected screening, slurries, sludges, and other solids shall be disposed of in such a manner as to prevent entry of those wastes (or runoff from the wastes) into waters of the State. The proper authorization for such disposal shall be obtained from the Agency and is incorporated as part hereof by reference.

(26) In case of conflict between these standard conditions and any other condition(s) included in this permit, the other condition(s) shall govern.

(27) The permittee shall comply with, in addition to the requirements of the permit, all applicable provisions of 35 Ill. Adm. Code, Subtitle C, Subtitle D, Subtitle E, and all applicable orders of the Board or any court with jurisdiction.

(28) The provisions of this permit are severable, and if any provision of this permit, or the application of any provision of this permit is held invalid, the remaining provisions of this permit shall continue in full force and effect.

(Rev. 7-9-2010 bah)

Appendix C

2016 Stormwater Management Municipal Code

CHAPTER 11-18
STORMWATER MANAGEMENT

11-18-010 Title and purpose.

11-18-020 Definitions.

11-18-030 Stormwater management plan - Required.

11-18-040 Stormwater management plan - Exceptions.

11-18-050 Stormwater management plan - Submission, approval and compliance.

11-18-060 Stormwater management plan - Amendment.

11-18-070 Change of ownership.

11-18-080 Stormwater management plan - Fees.

11-18-090 Variance.

11-18-100 Site inspections.

11-18-110 Regulations.

11-18-120 Chapter requirements not exclusive.

11-18-130 Enforcement and penalties.

11-18-140 Cease and desist orders.

11-18-010 Title and purpose.

This chapter shall be known and may be cited as the "Chicago Stormwater Management Ordinance". It is hereby declared to be the policy of the City to promote programs that minimize the negative stormwater impacts of new development and redevelopment.

(Added Coun. J. 12-13-06, p. 95586, § 1)

11-18-020 Definitions.

For the purposes of this chapter, unless the context requires otherwise, the following terms, regardless of whether or not they are capitalized, shall have the definitions set forth below:

Applicant. A person applying for a Stormwater Management Plan approval or an amendment thereto or variance therefrom. An Applicant must be the Owner or Developer of the Regulated Development specified in the Plan.

Average Dry-Weather Flow. Non-stormwater flow that consists of either (a) sanitary flow as quantified in 35 Ill. Admin. Code, Subtitle C, Chapter II, Part 370, Appendix B ("Table Number 2 - Commonly Used Quantities of Sewage Flows From Miscellaneous Type Facilities"), as amended, or (b) industrial process water flow as quantified by determining the cubic feet per second released during the average of seven consecutive 24-hour periods.

Best Management Practice (BMP). A measure approved by the commissioner and used to control the adverse stormwater-related effects of development.

Building commissioner. The commissioner of buildings or his designee.

Commissioner. The commissioner of water management or his designee.

Developer. Any person who manages, organizes, oversees, plans or supervises the creation of a Regulated Development.

Drainage Area. Any location from which or through which stormwater moves to a drainage system.

Existing Conditions. The condition of a site in the ten years prior to the date of a Plan submission, as shown on historical aerial

photographs or other verifiable documentation. If a site has been demolished and/or cleared within such ten-year period, its conditions prior to such demolition and/or clearing may be used as a basis for existing conditions.

Impervious Surface. A surface which substantially precludes the infiltration of water, such as concrete, asphalt, tile or compacted gravel.

Infiltration. The passage, movement or percolation of water into and through soil surfaces, including soil surfaces on roofs and in landscaped areas.

Owner. The owner, manager, agent or other person in charge, possession or control of a Regulated Development or any part thereof.

Plan. The Stormwater Management Plan required by this chapter.

Regulated Development or *Development.* Any construction activity, excavation or grading, commencing on or after January 1, 2008, that:

(a) disturbs a land area or substantially contiguous land areas of 15,000 or more square feet in the aggregate. Land areas separated by public right-of- way at the conclusion of development shall not be deemed "substantially contiguous" to each other for purposes of this definition. For purposes of calculating square footage pursuant to this paragraph (a), "land area" shall include twenty-five percent of the square footage of the sidewalls of a building that directly connects to the sewer system via side gutters, and shall also include any average dry-weather flow based on a conversion rate of 1.0 cfs (cubic feet per second) into one acre (43,560 square feet), or

(b) creates an at-grade impervious surface of 7,500 or more substantially contiguous square feet, or

(c) results in any discharges of stormwater into any waters or separate sewer system.

For purposes of this definition, square footage shall be calculated based upon the project as a whole, regardless of whether construction proceeds in phases. A Regulated Development shall not include projects located entirely within the public right-of-way at the conclusion of development. With respect to a project located both on the public right-of-way and on private property at the conclusion of development, that portion of the project located on the public right-of-way will not be included in calculating the square footage thresholds of subparagraphs (a) and (b) of this definition. If a project includes Residential Development, the Residential Development will not be included in calculating the square footage thresholds of subparagraphs (a) and (b) of this definition.

Residential Development. A Regulated Development, or portion thereof, which upon completion will result in the subdivision of land into detached single-family or two-family dwellings.

Runoff. The water derived from precipitation falling onto a Regulated Development which is in excess of the infiltration capacity of the soils of that Development, which flows over the surface of the ground or is collected in any watercourse.

Stormwater. Water derived from any form of precipitation.

Stormwater Drainage System. Any and all natural and artificial means used in combination to conduct stormwater to, through, or from a Drainage Area to the point of infiltration or final outlet from a Regulated Development. A Stormwater Drainage System includes, but is not limited to, any of the following: conduits and appurtenance features, canals, channels, ditches, streams, culverts, streets, storm sewers, detention basins, swales, vegetated areas and pumping stations.

Stormwater Management Plan. A detailed formulation of a program of action which describes a proposed or existing Stormwater Drainage System and environmental features applicable to a Regulated Development. The Plan shall include programs for grading and drainage, operations and maintenance, and soil, sediment and erosion control. These programs shall consist of written documentation, scaled maps and drawings with supporting engineering calculations.

Watercourse. Any channel, natural or artificial, lined or unlined, through which water flows or may flow.

Waters. All watercourses and all lakes, ponds, wetlands and other bodies of water, whether natural or artificial, that are located wholly or partly within or adjoining the territorial boundaries of the City.

(Added Coun. J. 12-13-06, p. 95586, § 1; Amend Coun. J. 11-8-12, p. 38872, § 208)

11-18-030 Stormwater management plan - Required.

Every Regulated Development shall at all times have in place a Plan approved by the City. In addition to such other requirements as the commissioner may set forth by regulation, the Plan shall include the following:

(a) Provisions for Stormwater Management:

(1) *Rate Control.* Stormwater Drainage Systems shall manage the peak rate of discharge from the Regulated Development, incorporating the maximum permissible release rate. Provided, however, that Developments that create an at-grade impervious surface of less than 7,500 substantially contiguous square feet and that directly discharge to waters shall not be subject to the rate control requirements of this subparagraph (a)(1).

(2) *Volume Control.* Stormwater drainage systems shall reduce the volume of runoff from a Regulated Development by one of the following measures:

(A) capture one-half inch of runoff from all impervious surfaces in accordance with volume control BMPs; or

(B) for Developments that do not directly discharge to waters or to a municipal separate storm sewer system, achieve a fifteen percent reduction in impervious surfaces from existing conditions.

(b) Provisions for sediment and erosion control.

(c) Provisions for operations and maintenance.

(Added Coun. J. 12-13-06, p. 95586, § 1)

11-18-040 Stormwater management plan - Exceptions.

(a) A Plan shall not be required for Residential Development.

(b) The volume control requirements of a Plan shall not apply to the following:

(1) Developments that do not directly discharge to waters or to a municipal separate storm sewer system and that will upon completion of development have less than fifteen percent impervious surfaces.

(2) Developments consisting of surfaces at an airport that are intended for aircraft operation.

(3) Developments taking place at any facility that is operating under a permit issued pursuant to the National Pollution Discharge Elimination System, 40 C.F.R. Part 122, as amended, for industrial or municipal discharges.

(Added Coun. J. 12-13-06, p. 95586, § 1)

11-18-050 Stormwater management plan - Submission, approval and compliance.

(a) The submission of the Plan required by this chapter shall be made by the Applicant to the building commissioner in such form(s) and format(s) as the commissioner may require. As part of the Plan submission, the Applicant shall provide such information regarding the site and its proposed uses as the application may require. The Plan submission shall be submitted as part of the sewer permit review process required by Chapter 11-16 of the Code. The building commissioner shall be the custodian of all such submissions.

(b) The Plan shall be valid only upon approval by the building commissioner.

(c) Before a Plan may be approved, the Applicant must certify to the building commissioner that the Applicant has met or will meet, in addition to the requirements of this chapter, all other city, county, state, and federal requirements related to floodplains, wetlands and water quality.

(d) Following Plan approval and completion of construction, the Owner shall provide to the building commissioner, in such time frame as established by regulation, as-built drawings of the Development in such form(s) and format(s) as the commissioner of water management may require. Consistent with applicable law, the building commissioner shall treat such as-built drawings as confidential trade secrets, and shall provide the Owner with a copy of any appeal, received by the building commissioner, of the building commissioner's notice of denial provided to a third party seeking inspection and copies of such drawings.

(Added Coun. J. 12-13-06, p. 95586, § 1; Amend Coun. J. 11-8-12, p. 38872, § 209)

11-18-060 Stormwater management plan - Amendment.

A Regulated Development shall be developed, operated and maintained in compliance with its approved Plan until such time as the City approves an amendment or other modification of the Plan for that Regulated Development. The submission of a request for amendment shall be made to the building commissioner in such form(s) and format(s) as the commissioner of water management may require. The building commissioner shall review any request for amendment and shall notify the Applicant of the result of such

review. An amendment may only be granted if the building commissioner determines that the amendment will not have a detrimental effect on the Plan.

(Added Coun. J. 12-13-06, p. 95586, § 1; Amend Coun. J. 11-8-12, p. 38872, § 210)

11-18-070 Change of ownership.

(a) Upon a change of ownership of a Regulated Development, each new Owner of the Regulated Development or any part thereof shall comply with the Plan approved for that Regulated Development until such time as the building commissioner approves an amendment or other modification of the Plan for that Development.

(b) A change of ownership of a Regulated Development shall not be considered to be an amendment. However, the Owner of a Regulated Development for which a Plan is required or has been approved shall notify each new Owner of the applicability of the Plan to the Regulated Development, and provide each new Owner with a copy of the Plan, before consummation of the sale of the Development. A violation of this subsection (b) shall be punishable by a fine of $500.00.

(Added Coun. J. 12-13-06, p. 95586, § 1; Amend Coun. J. 11-8-12, p. 38872, § 211)

11-18-080 Stormwater management plan - Fees.

A non-refundable fee for review of a Plan submission or variance request shall be remitted to the building commissioner as part of the Plan submission or variance request. The fee for review of a Plan submission, or variance request based upon Section 11-18-090(b)(2), (3) or (4), shall be as follows:

(a) For Regulated Developments affecting less than 50,000 square feet - $1,000.00.

(b) For Regulated Developments affecting 50,000 or more square feet - $3,000.00.

The fee for review of a variance request based upon Section 11-18-090(b)(1) shall be 50% greater than the amounts specified in (a) and (b) above.

(c) For amendments to a Plan submitted within one year of Plan approval, the fee shall be $350.00 per submission. For amendments submitted over one year after Plan approval, the fee shall be $500.00 per submission.

(Added Coun. J. 12-13-06, p. 95586, § 1; Amend Coun. J. 11-8-12, p. 38872, § 212)

11-18-090 Variance.

(a) Upon written petition of the Applicant demonstrating that exceptional circumstances exist, the commissioner may grant a variance, in whole or in part, from the requirements of Section 11-18-030. To the extent that the Applicant can comply with Section 11-18-030, the Applicant must do so.

(b) Exceptional circumstances justifying the application of this section shall exist only where the Applicant can clearly demonstrate, to the satisfaction of the commissioner, that one of the following four circumstances exists:

(1) The Applicant cannot comply with Section 11-18-030 because of the site's exceptional physical conditions or circumstances. To demonstrate that such conditions or circumstances exist, the Applicant must provide supporting documentation. At a minimum, the Applicant must show that the site is designed to minimize the peak rate of discharge and volume of stormwater from the Development. Such showing must include a BMP feasibility evaluation for each building, parking area, landscaped area and each other significant footprint at the site. The evaluation must include all necessary technical computations and analyses (examples include engineering, architectural and horticultural analyses) to assess fully the applicability of pertinent BMPs and the extent to which they can be applied to comply with Section 11-18-030.

(2) The Applicant cannot comply with Section 11-18-030 without causing a public nuisance.

(3) The Applicant cannot comply with Section 11-18-030 without violating the Building Code or the Fire Code, as those terms are defined in Section 1-4-090 of the code, or a state or federal law.

(4) The Regulated Development is a registered landmark and compliance with Section 11-18-030 would violate the Regulated Development's landmark status.

(c) Applications for a variance shall be in a form prescribed by the commissioner. All applications for a variance shall bear the notarized signature and certification of a professional architect, engineer or geologist licensed in the State of Illinois.

(d) In applying for a variance, an Applicant may propose, and the commissioner may consider, alternative measures to accomplish

the stormwater management goals of this chapter.

(Added Coun. J. 12-13-06, p. 95586, § 1)

11-18-100 Site inspections.

To enable the commissioner, or his designee, to monitor compliance with this chapter, the Owner shall permit access during reasonable hours to those areas of a Regulated Development affected by the Plan.

(Added Coun. J. 12-13-06, p. 95586, § 1; Amend Coun. J. 11-16-11, p. 13798, Art. II, § 6)

11-18-110 Regulations.

The commissioner is authorized to promulgate regulations to effectuate the purposes of this chapter. Any regulations so promulgated shall be considered as an integral part of the Chicago Stormwater Management Ordinance and shall be enforceable, and their violation subject to the same penalties, as set forth in this chapter.

(Added Coun. J. 12-13-06, p. 95586, § 1)

11-18-120 Chapter requirements not exclusive.

The requirements of this chapter shall be in addition to, and shall not relieve any person from compliance with, all other applicable provisions of the code.

(Added Coun. J. 12-13-06, p. 95586, § 1)

11-18-130 Enforcement and penalties.

(a) Except as otherwise specifically provided in this chapter, the commissioner, and his respective designee, are authorized to enforce this chapter and any regulations promulgated hereunder, including the issuance of citations for violations.

(b) Owners, developers and any other persons who violate any provision of this chapter shall be jointly and severally liable for each such violation.

(c) The failure to obtain a plan approval if required by this chapter shall subject the violator to a civil penalty of $5,000.00 to $10,000.00. Except as otherwise specifically provided, other violations of this chapter shall be punishable by a civil penalty of $100.00 to $1,000.00 for each such violation. In addition to any penalties imposed for violations of this chapter, violations of any Plan requirement or condition shall be punishable by a penalty of not less than $100.00 and not more than $1,000.00 for each such violation. Each day a violation continues shall be considered to be a separate violation. In addition to the civil penalties specified herein, the City may recover as an additional civil penalty its attorneys' fees and three times the amount of all costs and expenses incurred by the City in abating or remediating a violation of this chapter.

In addition to any other remedies, penalties or means of enforcement provided in this chapter, if the commissioner, on due investigation, makes a determination of noncompliance, he may request the corporation counsel to make application on behalf of the City to the Circuit Court of Cook County for such other order as the Court may deem necessary or appropriate to secure compliance. The corporation counsel may then institute proceedings on behalf of the City, as provided by law.

(Added Coun. J. 12-13-06, p. 95586, § 1; Amend Coun. J. 11-16-11, p. 13798, Art. II, § 6)

11-18-140 Cease and desist orders.

(a) The commissioner may issue a cease and desist order to stop any person from proceeding with any activity regulated under this chapter when the commissioner has reason to believe that such activity is in violation of this chapter, or that the activity endangers human or animal health, endangers the environment, or has the potential to cause or worsen flooding or wasteful use of water. The commissioner may enforce a cease and desist order pursuant to this section or pursuant to section 11-18-130(d).

(b) Prior to imposing the penalty specified by this section, the commissioner(s) issuing the cease and desist order shall serve the respondent with a copy of the order, stating the nature and location of the violation, the date by which the respondent must cease and desist the illicit activity, the amount of the applicable penalty for noncompliance, the respondent's right to request an administrative hearing to contest the merits of the order, and the time and manner in which a hearing may be requested. Service of the cease and desist order shall be in the manner set forth in Section 2-14-074 of this code.

(c) (1) Within 10 days of service of the cease and desist order, the respondent may submit to the commissioner(s) a written request for a hearing to be conducted by the City's department of administrative hearings. Upon receipt of a timely request for a

hearing, either or both of the commissioners shall institute an enforcement action with the department of administrative hearings. Notice of the administrative hearing shall be given to the respondent in the manner set forth in Section 2-14-074 of this code.

(2) In the event the respondent fails to comply with a cease and desist order or fails to request a hearing within the 10-day period provided in subsection (c)(1) of this section, the commissioner(s) issuing the order may institute an action to enforce the order with the department of administrative hearings. Notice of the administrative hearing shall be given to the respondent in the manner set forth in Section 2-14-074 of this code.

(d) Upon the initiation of an enforcement action pursuant to subsection (c) of this section, the department of administrative hearings shall appoint an administrative law officer who shall conduct the hearing within 30 days of receiving; the request. Chapter 2-14 of the code shall apply to any hearing conducted pursuant to this section. The cease and desist order shall remain in effect until the department of administrative hearings has taken final action on the matter. In addition to imposing fines and penalties consistent with this section, the administrative hearing officer shall have the authority to affirm, vacate or modify the cease and desist order.

(e) The penalty specified by this section shall be imposed either upon expiration of the time period in which the respondent may seek review by the department of administrative hearings, or upon the administrative law officer's finding adverse to the respondent, as applicable.

(f) Violations of an order issued under this section shall be punishable by a penalty of $10,000.00. Each day that the violation continues beyond the specified cessation date shall be deemed a separate offense.

(Added Coun. J. 12-13-06, p. 95586, § 1; Amend Coun. J. 11-16-11, p. 13798, Art. II, § 6)

Appendix D

2016 Regulations for Sewer Construction and Stormwater Management

CITY OF CHICAGO - DEPARTMENT OF WATER MANAGEMENT

2016 REGULATIONS FOR SEWER CONSTRUCTION AND STORMWATER MANAGEMENT

JANUARY 2016

City of Chicago
Rahm Emanuel, Mayor

Department of Water Management
Thomas H. Powers, PE, Commissioner

Department of Water Management
Regulations for Sewer Construction
and Stormwater Management

January 2016

TABLE OF CONTENTS

CHAPTER I – GENERAL 1
1.0 AUTHORITY 1
1.1 ACRONYMS AND ABBREVIATIONS 1

CHAPTER II - SEWER REQUIREMENTS AND STANDARDS 1
PART 1 APPLICABILITY 1
PART 2 DESIGN SUBMITTALS FOR DEVELOPMENTS ON PRIVATE PROPERTY 1
2.0 PLAN REQUIREMENTS FOR NON-REGULATED DEVELOPMENTS 1
2.1 ADDITIONAL REQUIREMENTS FOR REGULATED DEVELOPMENTS 2
2.1.1 PLAN REQUIREMENTS 2
2.1.2 STORMWATER CALCULATIONS AND OTHER DOCUMENTATION 5
2.1.3 ELECTRONIC FILES 5
PART 3 REQUIREMENTS FOR DEVELOPMENTS ON PRIVATE PROPERTY 6
3.0 APPLICABILITY 6
3.1 GRADING AND DRAINAGE REQUIREMENTS 6
3.1.1 DISCONNECTION OF DOWNSPOUTS 7
3.1.2 BY-PASS FLOWS 7
3.1.3 SUNKEN DRIVEWAYS 8
3.2 SEWER PIPE REQUIREMENTS 9
3.2.1 SEWER PIPE MATERIAL 9
3.2.2 SEWER PIPE SIZES 10
3.2.3 SEWER PIPE SLOPES 10
3.2.4 SEWER GROUND COVER 11
3.3 SEWER STRUCTURE REQUIREMENTS 11
3.3.1 STRUCTURE SPACING 11
3.3.2 CATCH BASINS 11
3.3.3 INTERCEPTING GREASE BASINS 12
3.3.4 LINT BASINS 13
3.3.5 INLETS, AREA AND TRENCH DRAINS 13
3.3.6 OIL/WATER SEPARATORS 13
3.4 CONNECTIONS TO CITY SEWERS 13
3.4.1 SINGLE CONNECTIONS FOR SITES SMALLER THAN 0.5 ACRES 14
3.4.2 SINGLE CONNECTIONS FOR SITES LARGER THAN 0.5 ACRES 14
3.4.3 MULTIPLE CONNECTIONS 14
3.4.4 RE-USE OF EXISTING CONNECTIONS 15
3.4.5 CONNECTION SIZING 15
3.5 DRY WEATHER FLOWS 16
3.6 FLOW DIVERSIONS 16
PART 4 REQUIREMENTS FOR THE PUBLIC WAY 18
4.0 SEWER CONSTRUCTION 18
4.0.1 RIGHT OF WAY AS-BUILT PLANS 18
4.1 OTHER UTILITY CONSTRUCTION 18
4.1.1 CLEARANCE REQUIREMENTS 18
4.1.2 EXISTING FACILITIES PROTECTION 19

CHAPTER III - REQUIREMENTS FOR STORMWATER MANAGEMENT..... 1
PART 1 GENERAL..... 1
1.0 APPLICABLITY 1
1.1 PROVISIONS FOR STORMWATER MANAGEMENT 1
PART 2 STORMWATER PLAN REVIEW..... 1
2.0 DESIGN SUBMITTALS..... 1
2.0.1 DESIGN REVIEWS 1
2.0.2 DESIGN VARIANCES 2
2.0.3 PLAN APPROVALS..... 2
2.0.4 PLAN AMENDMENTS 2
2.0.5 AS-BUILT PLANS..... 3
2.0.6 SITE INSPECTIONS..... 4
PART 3 – RATE CONTROL OF STORMWATER..... 4
3.0 APPLICABILITY..... 4
3.1 DESIGN REQUIREMENTS 4
3.1.1 LOT-TO-LOT BUILDINGS 5
3.1.2 BUILDINGS WITH TRIBUTARY SIDEWALLS OR SIGNIFICANT DWF 5
3.1.3 OPEN SPACE DISCHARGING TO COMBINED SEWERS..... 5
3.1.4 DIRECT DISCHARGING INTO WATERS..... 6
3.1.5 BUILDING REHABILITATIONS 6
3.2 RATE CONTROL BMPs 6
3.3 STANDARD MAXIMUM RELEASE RATE 9
3.4 COMPUTED MAXIMUM RELEASE RATE..... 10
3.4.1 OUTLET SEWER CAPACITY 10
3.4.2 DRAINAGE AREA COMPUTATIONS 11
3.4.3 LOCAL SEWER CAPACITY..... 12
3.4.4 CRITICAL LOCAL SEWER CAPACITY 12
3.4.5 MAXIMUM RELEASE RATE..... 12
3.5 COMPLIANCE WITH APPLICABLE SEWER REQUIREMENTS AND STANDARDS..... 12
3.5.1 REQUIREMENTS FOR MULTIPLE CONNECTIONS..... 12
3.6 RESTRICTOR CALCULATIONS 13
3.7 REQUIRED STORAGE..... 14
3.7.1 RESIDENTIAL LAND USES—RIGHT-OF-WAY stORAGE..... 14
3.7.2 COMMERCIAL/ INDUSTRIAL/ PUBLIC DEVELOPMENTS 15
3.8 AVAILABLE STORAGE 15
3.8.1 CALCULATION OF STORAGE..... 15
3.8.2 DETENTION CREDIT FOR STORMWATER CAPTURE FACILITIES 15
PART 4 VOLUME CONTROL OF STORMWATER 16
4.0 APPLICABILITY..... 16
4.1 DESIGN REQUIREMENTS 16
4.1.1 GROUNDWATER INFILTRATION BMPS..... 16
4.1.2 INFILTRATION EXCEPTION..... 17
4.1.3 DRAINAGE AREAS AND VOLUME CONTROL..... 17
4.1.4 OVERSIZED STORMWATER DETENTION..... 17
4.1.5 VOLUME CONTROL STORAGE 18
4.1.6 DIRECT DISCHARGE TO WATERS 18
4.2 VOLUME CONTROL BMPS..... 18

4.3 GEOTECHNICAL INVESTIGATIONS 22
PART 5 EROSION AND SEDIMENT CONTROL 23
5.0 APPLICABILITY 23
5.1 EROSION AND SEDIMENT CONTROL BMPS 23
5.2 SUBMITTAL REQUIREMENTS 23
5.2.1 DEVELOPMENTS DISCHARGING TO COMBINED SEWERS 24
5.2.2 DEVELOPMENTS DISCHARGING TO WATERS 24
PART 6 OPERATION AND MAINTENANCE REQUIREMENTS 25
6.0 APPLICABILITY 25
6.1 SUBMITTAL REQUIREMENTS 25
6.2 OPERATIONS AND MAINTENANCE PRACTICES 26

CHAPTER IV – PROHIBITION OF ILLICIT CONNECTIONS 1
PART 1 GENERAL 1
PART 2 DEFINITIONS 1
PART 3 REQUIREMENTS 2

APPENDIX I Stormwater Ordinance
APPENDIX II-A Standard Details
APPENDIX II-B Design/Construction Affidavit in Support of the Stormwater Infiltration or at Grade Discharge of Downspouts on Residential Buildings
APPENDIX II-C Affidavit in Support of Erosion and Sediment Control Measures during Construction
APPENDIX II-D Connection Sizing
APPENDIX II-E Existing Facilities Protection
APPENDIX II-F Approved Vendor List for Custom Vortex Restrictors
APPENDIX III-A Outlet Capacity Map/Tables
APPENDIX III-B Stormwater Detention Calculation Forms (10 year and 100-year)

CHAPTER I – GENERAL

1.0 AUTHORITY

These Regulations are promulgated by the City of Chicago DWM pursuant to authority granted by Sections 2-106-040, 11-16-300, 18-29-110 and 11-18-110 of the Municipal Code.

1.1 ACRONYMS AND ABBREVIATIONS

The following acronyms and abbreviations are used in these Regulations. Except where the context requires otherwise, terms defined in Section 11-18-020 of the Chicago Stormwater Management Ordinance have the same meaning when used in these Regulations. See Appendix I.

ADA	Americans with Disabilities Act
ASTM	American Society of Testing Materials
BMP	Best Management Practice
CDOT	City of Chicago Department of Transportation
cfs	Cubic foot per second
CIP	Cast Iron Pipe
City	City of Chicago
DOB	Department of Buildings
DIP	Ductile Iron Pipe
DWF	Dry Weather Flow
DWM	Chicago Department of Water Management
ECP	Erosion Control Plan
EPA	U.S. Environmental Protection Agency
ESVCP	Extra Strength Vitrified Clay Pipe
ft^2	Square foot
ft/s	Feet per second
ft^3/s/acre	Cubic foot per second per acre
HWL	Highwater Level
ID	Inside Diameter of Sewer
IDOT	Illinois Department of Transportation
IEPA	Illinois Environmental Protection Agency
ISWS	Illinois State Water Survey
MS4	Municipal Separate Storm Sewer System
MWRDGC	Metropolitan Water Reclamation District of Greater Chicago
NRCS	National Resource Conservation Services
NPDES	National Pollutant Discharge Elimination System
O&M	Operation and Maintenance
OD	Outside Diameter of Sewer
Ordinance	Chicago Stormwater Management Ordinance, Chapter 11-18 of the Municipal Code

PVC	Polyvinylchloride
RCP	Reinforced Concrete Pipe
RCRA	Resource Conservation Recovery Act
TARP	Tunnel and Reservoir Plan

CHAPTER II - SEWER REQUIREMENTS AND STANDARDS

PART 1 APPLICABILITY

Chapter II of these Regulations provides general design requirements and standards for sewer construction within the City.

PART 2 DESIGN SUBMITTALS FOR DEVELOPMENTS ON PRIVATE PROPERTY

2.0 PLAN REQUIREMENTS FOR NON-REGULATED DEVELOPMENTS

Plans requiring the review and approval of the DOB must provide sufficient information to convey the intent of the design for construction. As a minimum, plans must include the following information.

a. A clear site location map showing the site, north direction, local streets, alleys, right-of-ways and easements.

b. A brief description of the proposed development including existing and proposed land use.

c. A detailed site plan showing the following information.

- Building structures and fences
- Roadways, parkway lots, driveways, sidewalks and other impervious surfaces
- Pervious area including but not limited to grass and dirt
- Adjacent roadways, ponds, channels or flood plains
- Surface flow and grading directions

d. Proposed sewers, sewer structures and cleanouts shall be shown on the plans. The details of such features shall include the following.

- Size, and approximate location of city sewer
- Connection location(s)
- Sewer sizes, lengths and minimum slopes

e. The location of all building downspouts shall be shown in the plans. Downspouts shall be splashed to landscaped areas, where possible.

2.1 ADDITIONAL REQUIREMENTS FOR REGULATED DEVELOPMENTS

In order to verify proper implementation of BMPs, a detailed grading and drainage plan accurate to within 0.01 feet must be submitted as part of the Plan for a Regulated Development. See Chapter III, Section 3.9- Submittals. In addition to the required information set forth in Section 2.0 of this chapter, the following information described in Sections 2.1.1, 2.1.2, and 2.1.3 must be included as part of the stormwater management plan.

For sites larger than or equal to 15,000 square feet, plan elevations shall be based on the City Datum, or for sites less than 15,000 square feet, relative grades are allowed but shall have a datum correlation to the City Datum.

2.1.1 PLAN REQUIREMENTS

For Regulated Developments, the Plan submittal shall include but not be limited to the following. All plan sheets shall include a North arrow and a graphic scale with plan information presented accurately at a standard engineering scale (1”=5’, 1”=10’, 1”=20’, 1”=30’, 1”=40’, 1”=50’, 1”=60’, or 1”=100’). All plan sheets shall be 24”x36” maximum sheet size. If full-sized plans are larger than 24”x36”, provide scaled half-sized sets. All plan sheets shall include a title block indicating the project name and street address, name and address of the designer, sheet title, sheet number, original drawing date, and revision dates.

C-1 COVER SHEET

- Indicate project title, project information, and street address of the site.
- Show location map of the project site with North arrow.
- Provide required City benchmarks with City reference number (see above for datum requirements).
- Include title blocks for Architect, Engineer, Owner and/or Developer with address and telephone numbers for each
- Provide sheet index.
- Provide Digger symbol and Handicapped signature block with notes required by CDOT including Duty to Indemnify statement.
- Provide legends for abbreviations and symbols.
- Provide signature and seal of licensed design professional.

C-2 TOPOGRAPHIC AND UTILITY SURVEY

- Indicate property lines and limits of proposed construction.
- Identify all streets, alleys, crosswalks, and sidewalks and indicate their width.
- Identify type of curb & gutter, driveways, ADA ramps with existing elevations throughout shown in enough detail to evaluate compliance with CDOT ADA Standards unless sidewalk or ramp removal and replacement is proposed.
- Identify sewer structures with rim and invert elevations.
- Indicate pipe sizes, material, and direction of flow.
- Show existing buildings and structures.
- Show contour lines or detailed spot elevations to fully describe topography.

C-3 DEMOLITION PLAN

- Topographic and utility survey provides the background of the plan.
- Show all demolition of pipes and sewer structures. If a pipe is abandoned in place, indicate method for plugging ends or filling with flowable fill.
- Identify items to be salvaged and what to do with them.
- Show all demolition of curb & gutter, pavement, sidewalk, etc.
- Indicate all items to be relocated.
- Indicate all other structures to be demolished.

C-4 GEOMETRIC PLAN

- Provide dimensions for property lines, buildings, parking lots, pavement markings, handicapped parking stalls, and other on-site features.
- Provide dimensions for driveways, alleys, streets, curb radii, pavement markings, curb ramps, and other features in the public right-of-way.
- Show CDOT required 12-foot sight triangles at driveways.
- Do not show demolished items on this plan.
- Show a line delineating the limits of construction.

C-5 GRADING PLAN

- Show proposed grades and contour lines in bold and existing grades and contour lines to remain in half-tone.
- Existing grade information at property lines.
- Existing grade information should extend at least 10 feet beyond property lines or as required by site design.
- Show curb & gutter, sidewalk, finished floor, pavement, ground, and other elevations necessary to completely define the proposed grading.
- Delineate the limits of ponding for surface detention by indicating the High Water Level (HWL) location and elevation.
- Identify sewer structures with rim elevations.
- Show overflow (overland flood route) location and elevation, typically indicated with large arrows.
- Show direction of surface drainage where needed, typically indicated with small arrows.
- Show a line delineating the limits of construction.
- Identify permeable pavement, drainage swales, bioinfiltration systems, rain gardens, impervious area, landscape area, any other BMPs, etc.
- Provide separate large-scale plan view details of curb ramps, alley returns, and driveways with detailed grading to demonstrate compliance with the latest revision of the CDOT ADA Standards.

C-6 UTILITY PLAN

- Show existing sewer pipe and structures in half-tone. Do not show demolished items on this plan sheet. Show size of existing sewer mains.
- Show all proposed underground utilities in bold.
- Indicate sewer pipes with length, size, slope, material, and direction of flow.
- Indicate proposed sewer structures with sequential number, structure type, structure size, rim elevation, and invert elevation.
- Indicate location, type, and size of restrictors.
- Delineate footprint of detention vault, and show necessary elevations.

- Show proposed sewer connections with the invert of the proposed connection and the invert of the existing sewer main at the connection point.
- Indicate vertical separation of sewer and water lines with elevation at all utility crossings.
- Show existing sewer drain stubs to be reused or abandoned.

C-7 EROSION AND SEDIMENT CONTROL PLAN

- Show temporary erosion and sediment control measures applicable to the project.
- Indicate proper maintenance schedule for each erosion and sediment control measure.
- Show applicable details such as silt fence, inlet protection, construction entrance, temporary sediment basin, sediment bags, erosion control blanket, ditch checks, etc.

C-8 OPERATIONS AND MAINTENANCE PLAN

- O & M Plan shall be prepared according to Chapter III, Part 6 of these Regulations and the *Stormwater Management Ordinance Manual*, Part 5 and Appendix C, latest revision.
- Include signed and notarized Owner's Certification Statement, Appendix II-A Sheet A.108.
- Label all stormwater BMPs. Indicate the type, size, and location of restrictors. Show sewer pipes with pipe size and material.
- Delineate High Water Level (HWL) of all areas of surface ponding with maximum depth of ponding.
- Indicate overflow location.
- Include maintenance guidelines from the *Stormwater Management Ordinance Manual*, Appendix C as plan notes. These are the minimum maintenance requirements.
- Include minimum design requirements from Chapter III, Section 6.2 of these Regulations as plan notes.

C-9 STORM AND SANITARY SEWER DETAILS

- Provide all applicable sewer details from these Regulations including but not limited to catch basins, manholes, and sewer connections.
- Indicate elevations and dimensions where required to complete the details, such as orifice diameter and invert on Appendix II-A Sheet A.19.
- Show site specific detail of the catch basin with the restrictor, or clearly indicate on the Utility Plan the upper and lower invert of the half-trap, the inverts of any incoming pipes, etc. See Standard Drainage Structures for Private Development, Appendix II-A Sheet A.19.
- Provide a cross-section of each volume control BMP indicating depth, gradation, and composition of each layer as required to fully describe the BMP.

C-10 CIVIL (CDOT) DETAILS

- Provide the latest revision of all applicable CDOT details and all applicable CDOT ADA Standards.
- Provide separate large-scale plan view details of curb ramps, alley returns, and driveways with detailed grading to demonstrate compliance with the latest revision of the CDOT ADA Standards. These may be provided on a Civil Detail Sheet or as a separate detail on a Grading Plan.

2.1.2 STORMWATER CALCULATIONS AND OTHER DOCUMENTATION

One hard copy of each of the following items shall be provided with each submittal.

- Provide a scaled copy of the sewer atlas maps showing watershed areas delineated for each sewer segment analyzed, unless standard maximum release rate is used.
- Provide a scaled copy of the drain atlas maps for the same area.
- Provide rate control and volume control calculations in the latest revision of the Chicago Stormwater Spreadsheet Tool including only the pages that are applicable to the project. Rate control sections can only be used for sites smaller than 20 acres.
- Provide scaled exhibit drawings of pervious and impervious areas, off-site areas, impervious areas tributary to volume control BMPs, etc. as necessary to clarify calculations.
- Provide calculation of allowable release rate using Tab 0.0 of the spreadsheet tool unless another calculation method is required or unless the standard maximum release rate is used.
- Provide orifice sizing calculation using Tab 1.3 of the spreadsheet tool unless another calculation method is required. Vortex restrictors do not require sizing calculations.
- Provide calculation to demonstrate the rate control volume provided in the detention facilities.
- Provide geotechnical report with soil borings and a written analysis of the groundwater elevation when volume control BMPs or underground detention vaults are proposed.
- Provide percolation test data using single ring or double ring infiltrometer method as described in the *Stormwater Management Ordinance Manual*, if an infiltration rate of 0.5 in/hr or greater is used in the calculations.
- Provide Appendix II-C Affidavit in Support of Soil Erosion and Sediment Control Measures, signed and submitted as a .pdf file, if the site does not discharge to Waters.
- Provide Appendix II-B Affidavit in Support of Stormwater Infiltration or At-Grade Discharge of Downspouts on Residential Buildings, signed and submitted as a .pdf file, if the plan proposes infiltration or residential buildings that discharge downspouts to grade.
- Provide storm sewer capacity calculations for large sites that provide the 100-year flood route through the sewer system.
- Provide roof plans and interior plumbing plans, as applicable to roof detention and interior vaults, respectively.
- Provide landscape and green roof plans, as applicable.

2.1.3 ELECTRONIC FILES

At the conclusion of the review process, the stormwater reviewer will contact the designer to inform him/her that the plans and calculations are acceptable. The designer must then submit the approved plans, calculations, and any required soil borings, affidavits, or other documentation required during the review process in electronic format for the DWM permanent archive. After this information is received, DOB can then issue the design approval.

The plans submitted in electronic form must be signed and sealed by a Professional Engineer or Licensed Architect. The plans and affidavits must include all required signatures.

Plans must be submitted in *.TIF format. All other documentation shall be submitted in *.PDF format. The following file naming conventions shall be followed:

File Name:

"Street Address"-"Descriptive Suffix"

Where:

"Street Address" is the legal street address of the site using standard Postal Service abbreviations such as "N", "S", "E", "W", "St", "Ave", "Pl", "Ct", etc. Periods shall be omitted from the street address.

"Descriptive Suffix" is one of the following or similar suffixes:

- "vac" for street vacation documents
- "cov" for covenant documents
- "ease" for easement documents
- "plan" or "plan 01" or "plan C-01" with sequential numbering for design plans
- "asbuilt" for as-built plans
- "specs" for specifications
- "geotec" for geotechnical reports, soil borings, etc.
- "o+m" for operations and maintenance plans
- "aff" for affidavits
- "calc" for stormwater calculations including spreadsheet tool, reports, maps, etc.

Example File Names:
1000 E Ohio St-calc
121 N LaSalle St-geotec
120 N Racine Ave-o+m

PART 3 REQUIREMENTS FOR DEVELOPMENTS ON PRIVATE PROPERTY

3.0 APPLICABILITY

The design requirements discussed in this section apply to all developments outside of the public right-of-way.

3.1 GRADING AND DRAINAGE REQUIREMENTS

General requirements for site grading are as follows:

- To the extent possible, no sheet flow or discharge of stormwater will be allowed to adjacent private property.

- Overflows must be directed to the street where sewers and sewer structures are available. Where this is not possible, an underground overflow to convey the 100-year peak discharge to the public sewer may be allowed.
- No more than 400 square feet of contiguous at grade impervious area must sheet flow directly to the public right-of-way.
- No more than 1500 square feet or 5 foot wide strip of contiguous at grade pervious area must sheet flow directly to the public right-of-way.
- Runoff from a public alley or street must not be allowed to sheet flow into the site.
- Minimum gutter slope shall be 0.4%.
- Minimum slope on pavement shall be 1.0% (e.g. parking lot).
- Minimum slope in drainage swales shall be 0.5%.

For gas stations, outside areas not more than 5000 square feet, when not drained to a drainage structure, shall have any impervious area sloped toward an equivalent amount of pervious area or street gutter connected to a public sewer to avoid spilling or the discharge of water onto adjoining property.

3.1.1 DISCONNECTION OF DOWNSPOUTS

In accordance with the plumbing provisions of the Municipal Code, Article XI, Section 18-29-1101.2.3, the disconnection of roof downspouts is encouraged, when feasible. Downspout flow must be directed to the public right-of-way without causing a safety hazard or nuisance to adjacent properties or be collected by an on-site storm water management system, as required. On residential developments where downspout disconnection is proposed, the DWM's affidavit form in support of the disconnection must be signed and submitted with downspout locations shown on the plan. The affidavit form is provided in Appendix II-B.

3.1.2 BY-PASS FLOWS

Flows generated upstream of a Regulated Development may be by-passed through or around the BMPs provided that means of conveyance to the public right-of-way and the right-of-way itself can safely accommodate such flow for all storm events up to and including a 100-year magnitude.

If the by-flow is routed through a storm water detention system, such system must not overflow to the public right-of-way for storms of less than a 25-year magnitude based on the maximum release rate of the developed site. Additional on-site storage must be provided to prevent such 25-year overflows. However, if the upstream area approximates that of the Regulated

Development, the maximum release rate to the public sewer system may be adjusted higher to prevent such 25-year overflow, but not more than the existing discharge rate to the sewer system.

3.1.3 SUNKEN DRIVEWAYS

Sunken driveways are driveways that slope down to a below-grade building level. Developers must assume full responsibility for the design and construction of a project and therefore must ensure that such design and construction will not create a flooding or safety hazard to the occupants of the subject property or to the public.

As part of the City's Rain Blocker Program (inlet control), the public right-of-way, outside of the Central Business District, is used to store rainwater. As such, any proposed driveway sloping down to a below-grade building level must prohibit the entrance of any storm water runoff emanating from the public right-of-way and/or adjacent properties.

Submittal requirements for sunken driveway review include a topographic survey signed and sealed by a professional engineer or professional land surveyor including the site and sufficient surrounding area to establish the overflow locations and elevations in the gutter line of the street. Overflow elevations in the right-of-way must be shown relative to the driveway/sidewalk elevation where water may enter the building. Design requirements for sunken driveways are as follows:

Overflow elevations in the right-of-way must be at least one (1) foot vertical clearance below the driveway/sidewalk elevation where water may enter the building, or a detailed hydrologic/hydraulic analysis of the potential area tributary to the driveway must demonstrate sufficient clearance as calculated from a 100-year high water level in the right-of-way. In addition, hydrologic/hydraulic calculations must demonstrate that sufficient clearance is provided from the surface of water flowing in the gutter line to the driveway/sidewalk elevation where water may enter the building. Means of alleviating flooding by way of mechanical pumping of runoff from the right-of-way or modifications to the City's Rain Blocker Program will not be allowed. Proposed driveway and adjacent sidewalk must also conform to current IDOT, CDOT, and ADA design standards.

3.2 SEWER PIPE REQUIREMENTS

3.2.1 SEWER PIPE MATERIAL

Sewers constructed in sizes 21 inches in diameter and smaller must be ESVCP, ASTM Designation C-700 with C-425 joints; DIP, class 52 or equivalent, with push on self-contained, pre-lubricated gaskets or mechanical joints; or CIP, with hot poured pure lead firmly packed with oakum or hemp. See Section 18-29-702.3 and 18-29-1102.4 of the Municipal Code of Chicago.

CIP or DIP must be used under building structures. If the sewer size is less than 24 inches in diameter and the cover is less than 3 feet, then CIP or DIP must be used. DIP encased in polyethylene wrap is the only type of iron pipe allowed for City sewers. Other means of corrosion protection for iron pipe may be considered for private sewers.

In conformance with IEPA requirements, the horizontal clearance between a waterline and sewer must be 10 feet edge to edge. If a sewer and waterline (i.e., main or water service) have less than 10 feet of horizontal clearance, then DIP must be used if the sewer is less than 18 inches below the waterline. Furthermore, if the sewer is above the waterline, DIP must be used. CIP is not allowed in the right-of-way.

RCP must be used for sewers 24 inches in diameter and larger, unless prior approved by the DWM. ASTM Designation C-76, Class-III, Wall-B with O-ring type joints is the minimum requirement for this type of pipe. If self-lubricating gaskets are used, the physical properties of the gaskets must conform to ASTM C-361. RCP may not be used for pipe 21 inches in diameter and smaller, inside or outside the private property.

No plastic pipe may be used for any underground sewer or drain inside or outside the property, except as specifically allowed by the Municipal Code of Chicago. The Municipal Code of Chicago, Section 18-29-702.3 and 18-29-1102.5, Subsoil Drain Pipe, allows (1) PVC pipe - ASTM D2729 (type Sewer Pipe, PS25, PS50 and PS100); or (2) PVC perforated subsurface drain pipe, ASTM F 891 with an encasement of non-woven filter fabric filled with CA-7 (filter fabric shall have a clearance of 4 inches minimum from the outside of the perforated pipe), ASTM D 3034, SDR 35 (4 inch to 15 inch). No corrugated subsoil drain pipe is allowed.

The following alternative pipe materials shall be allowed only for non-conveyance stormwater Best Management Practice (BMP) applications, according to the Municipal Code of Chicago, Section 18-29-702.3: (1) High Density Polyethylene (HDPE) ASTM F 2306 and ASTM F 2648; (2) Polypropylene (PP) ASTM F 2418, ASTM F 2736, ASTM F 2764 and ASTM F 2787; (3) Aluminized Steel Type 2 ASTM A 929. HDPE flat drains are allowed when used as perforated underdrains in stormwater BMPs.

3.2.2 SEWER PIPE SIZES

Storm and combined sewers shall be designed to convey at least a 5-year storm event without surcharge. Since dedicated detention facilitates are typically designed for the 100-year event, storm sewers under surcharge must be capable of conveying design flows to such facilities. The following are criteria for minimum sizes:

- Minimum size of a combined house sewer shall not be less than 6 inches in diameter.
- Minimum size of sanitary or storm underground sewers shall not be less than 4 inches in diameter on private property and 6 inches in diameter in the public right-of-way.
- Perforated underdrains shall be a minimum of 4 inches in diameter and shall discharge to catch basins

3.2.3 SEWER PIPE SLOPES

The minimum slopes on combined and storm sewers must maintain a minimum full flow velocity of 3.0 ft/s, when feasible. The minimum slope on sanitary sewers must maintain a minimum flow velocity of 2.0 ft/s, when feasible. Whenever possible, the maximum full flow velocities within sewer lines must not exceed 10 ft/s. The following tables illustrate minimum slopes needed to achieve 3.0 ft/s.

For Vitrified Clay Pipe:

6" = 0.79 %	15" = 0.24 %
8" = 0.54 %	18" = 0.20 %
10" = 0.40 %	21" = 0.15 %
12" = 0.32 %	

Reinforced Concrete Pipe*:

24" = 0.18 %	36" = 0.11 %	60" = 0.052 %
27" = 0.15 %	42" = 0.09 %	66" = 0.046 %
30" = 0.13 %	48" = 0.07 %	72" = 0.040 %
33" = 0.12 %	54" = 0.06 %	78" = 0.036 %

*The maximum slope on reinforced concrete pipe shall be 3.33 percent.

3.2.4 SEWER GROUND COVER

The minimum cover over a sewer pipe shall meet IDOT standards. However, a minimum of 3.0 feet of cover must be placed over ESVCP. Unprotected sewers conveying DWF must have at least 3.5 feet of cover to guard against freezing. Flat top structures must be specified where necessary and shall be approved by the DWM.

3.3 SEWER STRUCTURE REQUIREMENTS

Sewer structures consist of junction chambers, manholes, catch basins, inlets, area drains, and clean-outs. Structures, frames, and lids shall be of City standard design as shown in the Appendix II-A. IDOT structures and manhole risers may be used for oversized pipe as part of stormwater detention facilities. The re-use of existing sewer structures is subject to City approval. Photographic documentation of the condition of sewer structures to be re-used must be provided when requested by the City.

3.3.1 STRUCTURE SPACING

Pipes measuring 12 inches in diameter and greater must have a manhole or catch basin placed at each change in pipe size, material, elevation, or direction. For pipes measuring less than 12 inches in diameter, a clean-out may be used. The maximum length of a sewer between structures shall be:

- 6" to 10" diameter = 150 feet
- 12" to 54" diameter = 330 feet
- 60" diameter and larger = 660 feet

3.3.2 CATCH BASINS

Outside areas greater than 400 square feet and not more than 5000 square feet, when drained to sewers, must be connected to catch basins not less 3.0 feet in diameter with sumps not less than 3.0 feet below the bottom of the trap. Contact the DOB for standards.

Each outside area more than 5000 square feet must be provided with a catch basin not less than 4.0 feet in diameter. The catch basin must have a sump not less than 3'-4" deep below the bottom of the trap. See the Appendix II-A Sheet A.18 for details of the DWM standard catch basin for public streets. See the Appendix II-A Sheet A.19 for catch basin details for private developments. Larger drainage areas may be permissible in cases where stormwater detention is required as approved by the DOB.

A catch-basin–to-catch-basin connection is allowed for stormwater drainage in a private development where sanitary flow and storm flow are separated onsite. The last structure before a connection to a combined sewer must have a half-trap. If this requirement cannot be met, all other upstream catch basins must have a half-trap.

A minimum 6-inch diameter outlet is required from catch basins, except for catch basins in the public right-of-way, which require an 8-inch diameter outlet.

3.3.3 INTERCEPTING GREASE BASINS

Establishments that prepare and process food and all multiple dwelling buildings with over six dwelling units (exclusive of townhouses) must have grease basins. All waste from sinks, garbage grinders, dishwashers, discharge from kitchens and all process waste must be intercepted before reaching the public sewer system, in accordance with Section 18-29-1003.1 and 18-29-1003.3 of the Municipal Code of Chicago, except waste from industrial/commercial garbage grinders and dishwashers.

Such interception must be made by an intercepting grease basin or special catch basin of a design and construction approved by the DOB, and as shown in Appendix II-A Sheets A.19 and A.20, or an approved grease separator, where applicable.

The intercepting grease basin must be located outside of the building served, when feasible. Intercepting grease basins must be vented when constructed inside the building. Plans for the approved basins and information regarding approved types of grease separators are available from the DOB. Individual grease traps under kitchen sinks in town homes where the private

drains from the individual units connect to the main sewer lines outside the buildings are permitted. This rule applies to connections to private main sewers as well as public main sewers.

3.3.4 LINT BASINS

Lint basins are required when washing machines are used commercially or in multi-residential buildings with more than 15 commercial washing units in a dedicated area. See the Appendix II-A Sheet A.21.

3.3.5 INLETS, AREA AND TRENCH DRAINS

Inlets are not permitted in the public way, unless specifically approved by the DWM due to utility conflicts. Area drains may be used to drain an outside area 400 square feet or smaller. Trench drains will be allowed in locations where a standard circular grate is impractical or does not have sufficient capacity to accept a design flow. An intercepting structure (with a 2-foot minimum sump) or catch basin must be installed downstream of the trench drain.

3.3.6 OIL/WATER SEPARATORS

Impervious areas tributary to Lake Michigan that are exposed to vehicular traffic must have an oil/water separator installed before connecting to a Lake Michigan outfall.

Such interception must be made by an intercepting oil/water separator basin or special catch basin of a design and construction approved by DOB.

3.4 CONNECTIONS TO CITY SEWERS

All private drain connections to the City sewer must be made in the street or parkway. No new connections to an alley sewer are permitted. Existing alley connections may be reused only if it is not feasible to tie to a main sewer line in the street. A minimum spacing of 15 feet between private drain connections to the City sewer shall be maintained, where possible.

Connections to existing ESVCP sewers shall be made with a vitrified clay wye junction or a properly sized saddle. No break-in connections will be allowed to existing clay, concrete sewers or lined brick sewers. Connections to existing concrete sewers must be cored. All connections to brick sewers which comprise one-half or more of the brick sewer's diameter require a

reinforced concrete collared structural detail, approved by a Licensed Structural Engineer. City standard connections as shown in Appendix II-A Sheets A.1, A.2, and A.19 must be made.

3.4.1 SINGLE CONNECTIONS FOR SITES SMALLER THAN 0.5 ACRES

All sites less than 0.5 acres will be allowed only one combined connection (i.e., storm and sanitary) to the City's main sewer. A separate sanitary connection will be allowed only if site constraints prohibit a single combined connection. A separate sanitary connection to another main sewer may be considered if the DWF comprises a significant portion of the maximum release rate. See Section 3.4.5 of this chapter, Connection Sizing.

A new connection should be made to the same city sewer line as the existing connection. If the location of the existing connection is non-existent or unknown, then the connection should be made to the street where the majority of the site's frontage is situated. An exception is single lot sizes (i.e., 125' x 30') where the connection is made at the front

3.4.2 SINGLE CONNECTIONS FOR SITES LARGER THAN 0.5 ACRES

For sites 0.5 acres and larger, typically a connection to the largest sewer line is made to maximize use of the sewer system's capacity. Connection to a larger sewer line must be made if all of the following conditions are met:

- The site is larger than 0.5 acres and has access to a larger sewer.
- The smaller sewer is not an auxiliary sewer (i.e., 4 feet in diameter and larger).
- The larger sewer has a capacity that is greater than or equal to the smaller sewer, or the larger sewer is located on the street where the majority of the site's frontage is situated.

If the connection to a smaller sewer must be made due to site constraints (i.e., utility, structural conflicts, etc.), then the maximum release rate from the site (in cfs/acre) to the smaller sewer must be reduced by 20 percent, or to a minimum of 0.15 cfs, whichever is greater.

3.4.3 MULTIPLE CONNECTIONS

The number of connection(s) required is generally a function of the size of the site. The number of new connections to the city's main sewer shall be limited whenever possible to avoid the extra time and cost of construction within the street.

If a site is 1.75 acres or larger, two or more connections must be considered in splitting the total discharge rate in a manner that will best utilize the capacity of the sewer system. The percentage of the split in flow is typically based on a ratio of the capacities (in cfs/acre) of the main line sewers. However, in the case of a flow diversion (Chapter II, Section 3.6), the discharge from a development must not reduce an existing sewer segment's (manhole to manhole) capacity by more than a maximum permissible percentage. Note - special requirements for Regulated Developments using multiple connections are provided in Chapter III, Section 3.5.1.

3.4.4 RE-USE OF EXISTING CONNECTIONS

The possibility of reinstating an existing connection must be examined to avoid disruption of traffic in the street and structural disturbance to the city sewer. All existing connections must be televised in the presence of a DWM inspector and approved in order to be reused. The recording must be in DVD format (or VHS format if approved in advance) and submitted to the DWM for review and approval prior to reuse. When proposing a new connection to an existing on-site private sewer system, the downstream system must be televised in the presence of a DWM inspector and approved in order to be used.

3.4.5 CONNECTION SIZING

The DOB must approve the size of each sewer connection. The size of the connection must be minimized to limit the hydraulic and structural impacts to the City's main sewer. The DWM's criteria for sizing connections outside of a building differ from those listed in the Building Provisions of the Municipal Code of Chicago, which pertain only to the interior of a building. See Appendix II-D for Connection Sizing.

The size of a combined connection must accommodate the anticipated 100-year flow and the peak DWF. Sanitary only connections must not be restrictive of the peak DWF without prior design approval. Any connection should be at least two sizes smaller than the size of the main sewer in the street. If the anticipated discharge rate exceeds the full flow capacity of the maximum connection size allowed, then the connection must drain under pressure and additional onsite design measures must be considered to safeguard against flooding. A further reduction in the stormwater release rate in conjunction with greater onsite detention storage, or watertight downspouts must be considered; otherwise, the construction of a larger sewer in the street may be required.

3.5 DRY WEATHER FLOWS

With regard to Regulated Developments (See Chapter III), if the Development's average DWF exceeds 10 percent of its allowable release rate, the average DWF shall be considered stormwater for purposes of calculating the maximum release rate. In computing the required storage, the maximum stormwater release rate must be reduced to compensate for the un-detained DWF (above the 10 percent limit).

If the average DWF exceeds the maximum release rate from the site, then a minimum discharge rate 25 gpm may be used to determine the storage requirement- A 3-inch vortex (0.15 cfs), in lieu of a 25 gpm pump, may be used, if Chapter III, Section 3.1.1 –Lot-to-Lot Buildings applies to create more storage capacity. However, if the proposed total direct discharge into the City sewer system exceeds the existing 5-year discharge rate, then a pumped discharge rate of 25 gpm may be required as directed by DWM.

3.6 FLOW DIVERSIONS

A flow diversion occurs when an existing connection to a main sewer line is relocated to another main sewer line that is not within the same drainage area of the original main line, or if a new source of water is introduced into the line such as with a vacant lot without sewers. If the existing connections to a site are unknown, it will be assumed that an existing connection was made to the street where the majority of the site's frontage is situated.

In general, flow diversions must be avoided whenever possible. However, in some cases, a flow diversion may be beneficial by increasing the capacity of a sewer line with poor capacity (less than 0.3 cfs/acre), while reducing it slightly in another with excess capacity (over 1.0 cfs/acre). If a flow diversion to a local sewer must be made due to site constraints, as in the case of a vacant lot, the following reductions in the stormwater release rate must be followed.

- If the existing capacity of the sewer segment where the flow diversion is being made is greater than 0.90 cfs/acre, then capacity of that sewer segment where the connection is made must not be reduced by more than 5 percent. Otherwise, the maximum rate of diverted flow must be reduced accordingly to meet the 5 percent limit, or to a minimum of 0.15 cfs, whichever is greater.

- If the existing capacity of the sewer segment where the flow diversion is being made is between 0.7 cfs/acre to 0.90 cfs/acre, then capacity of that sewer segment where the connection is made must not be reduced by more than 4 percent. Otherwise, the maximum rate of diverted flow must be reduced accordingly to meet the 4 percent limit, or to a minimum of 0.15 cfs, whichever is greater.
- If the existing capacity of the sewer segment to which the flow diversion is being made is less than 0.70 cfs/acre, then capacity of the sewer segment where the connection is made must not be reduced by more than 3 percent. Otherwise, the maximum rate of diverted flow must be reduced accordingly to meet the 3 percent limit, or to a minimum of 0.15 cfs, whichever is greater.

The above requirements for flow diversions are waived for sites less than an equivalent 0.5 acres or if the connection to a larger sewer is mandated, as discussed previously in Section 3.4.1 of this chapter. Both the large sewer connection and flow diversion penalties may apply.

PART 4 REQUIREMENTS FOR THE PUBLIC WAY

4.0 SEWER CONSTRUCTION

In areas where there are no existing City sewers to tie into or where property development will cause insufficient sewer capacity, the developer may be required to construct new sewer lines in the street at no cost to the City. The DWM, via the DOB, must review and approve all sewer work and appurtenant construction within the public right-of-way. Consult with the DWM for main design and construction requirements including rate control requirements that may apply. Requirements for construction are also listed in the Standard Sewer Specifications of Book 3, available upon request from the DWM.

4.0.1 RIGHT OF WAY AS-BUILT PLANS

As-built plans of new or replaced sewers in the public right-of-way must be submitted to the DWM Sewer Design Section within 30 days after completion of the project. The as-built plans must sealed by a Professional Engineer or Register Land Surveyor and be submitted with the form in Appendix II-A Sheet A.27. Plan and profile drawings of the sewers and sewer structures must be submitted on a compact disk in *.TIF format. All electronic files must be submitted in a file folder with one file name reflecting the addresses of the project, with street name first: (e.g. Jackson St. 300-500 S.) A hard copy of the as-built plans must also be submitted.

4.1 OTHER UTILITY CONSTRUCTION

4.1.1 CLEARANCE REQUIREMENTS

In the relocation or construction of private or public utilities, including pipe underdrains and/or subdrains, the utility must be located as far away as possible from the City sewer main and appurtenant sewer structures. A minimum horizontal distance of the inner diameter (ID) of the sewer plus 4.0 feet must be maintained between the centerlines of the sewer and the non-water utility, and outer diameter of the sewer (OD) plus 4.0 feet for any water utility. See Section 3.2.1 of this chapter for material requirements for sewers with less than 10 feet of horizontal clearance to a waterline. If the outside diameter/width of utility conduit is more than the sewer OD, a minimum of 4.0 feet horizontal clearance must be obtained from the outside face to outside face. Four feet horizontal clearance is also required from all sewer structures. A minimum of 18 inches vertical clearance from sewers and sewer structures is required for all

utilities. Any deviation from the aforementioned clearance requirements must have prior approval from the DWM -Design Section.

4.1.2 EXISTING FACILITIES PROTECTION

For any utility construction in the public right-of-way, the requirements set forth in the DWM 's "Existing Facility Protection" document, attached to these Regulations as Appendix II-E, must be followed.

CHAPTER III - REQUIREMENTS FOR STORMWATER MANAGEMENT

PART 1 GENERAL

1.0 APPLICABLITY

Chapter III of these Regulations provides standards and requirements applicable to Regulated Developments, as defined in the Chicago Stormwater Management Ordinance, Chapter 11-18 of the Municipal Code.

1.1 PROVISIONS FOR STORMWATER MANAGEMENT

Among its requirements, the Ordinance sets forth stormwater management provisions for rate control and volume control of stormwater applicable to all Regulated Developments. Also see DWM 's "Sewer Permit Requirements and Fees" booklet, latest edition.

PART 2 STORMWATER PLAN REVIEW

2.0 DESIGN SUBMITTALS

The DWM has designated DOB as its authorized agent to enforce compliance with the Storm water Management Ordinance and its associated Regulations. The initial Plan submittal must be signed by the Applicant and sealed by a Professional Engineer or Licensed Architect. The submittal must be made electronically through the DOB E-Plan system. Projects that require only stormwater review may be submitted in paper hardcopy format to DOB at the following address:

Department of Buildings
City Hall, Room 906
121 N. LaSalle Street
Chicago, Illinois 60602

A hardcopy submittal shall include one copy of the plans, one copy of the calculations, and a check for the stormwater review fee.

2.0.1 DESIGN REVIEWS

The Plan must show in detail that the Development will comply with the Ordinance and these Regulations. This showing includes but is not limited to: maximum release rate computations

with drainage area maps, volume and detention calculations, grading and drainage plans, operation and maintenance plans, and erosion and sediment control plans, and BMP details as applicable. See Chapter II, Part 2 for detailed plan submittal requirements.

Any questions regarding the status of a review should be directed to DOB stormwater reviewer. An Applicant may request a meeting with the DOB to discuss the project. The DOB will make reasonable efforts to accommodate requests for meetings. The Applicant must keep the DOB informed of project cancellation.

2.0.2 DESIGN VARIANCES

The Commissioner of DWM will consider variances in accordance with Section 11-18-080 of the Ordinance.

2.0.3 PLAN APPROVALS

When the stormwater reviewer determines that no further corrections to the plans and calculations are required, the stormwater reviewer will issue a checklist for final plan approval, which is valid for 90 days. In response to the checklist, the designer must submit an electronic version of the approved plans in *.TIF format as well as stormwater calculations and any required soil borings, appurtenant affidavits, etc. in *.PDF format and any paper hardcopies requested before the DOB can issue the design approval to the Applicant. See Chapter II, Section 2.1.3 for more detailed instructions on electronic file format and file naming conventions. If the final checklist items are not received within 90 days, the Applicant must request a plan amendment to process the approval. If the final checklist items are not received within 365 days, the Plan must be resubmitted as a new Plan. Once issued, the design approval may have attached conditions that must be addressed in the final Plan before application for a sewer permit. Design approvals shall be valid for 365 days from the date of issuance. If a sewer permit is not obtained within this 365-day time-frame, the Plan must be resubmitted as a new Plan. The application/review fee will be waived if the Applicant can demonstrate that the delay was caused by the City or a State agency as part of another permit review process.

2.0.4 PLAN AMENDMENTS

Any modification that will affect the performance of any proposed BMP or otherwise affect the rate or volume of stormwater leaving the property shall be considered an amendment to the Plan

and shall be reflected in the as-built drawings. Examples of Plan modifications that require an amendment include but are not limited to:

- Changes in grading that affect available storage volume or drainage patterns.
- Changes in size or location of connections to the city sewer.
- Structural changes to BMPs that impact storage volume.
- Changes in material or quantity of sewers and BMPs.
- Changes in the operation and maintenance of BMPs.

Examples of Plan modifications that do not require an amendment include:

- Vertical and horizontal alignment adjustments to sewer and sewer structures that will not affect hydraulic performance and that comply with design standards as listed herein.
- Changes in onsite sewer bends, fittings and connections.
- Notification of a change in Ownership of the Regulated Development.
- Utility conflict resolutions, as approved by a DWM field inspector.
- Changes in the Erosion Control Plan that do not increase erosion, if approved by a DOB field inspector.

The Applicant shall submit all amendments to DOB for approval prior to their construction or implementation at the Regulated Development. All amendments that occur within 365 days of Plan approval must be made by submitting the original documentation with the modifications described in text format, shown on the drawings and any revised calculations. Modifications to the structural portion of a Plan that occur more than 365 days after approval must be made by submitting the modification as if it were a new Plan.

2.0.5 AS-BUILT PLANS

The as-built plans must be sealed by the engineer or architect of record who prepared the design plans. As-built plans prepared by the contractor are not allowed. As-built plans must be provided to a DWM sewer inspector for approval within 14 days after completion of construction. Any deviation from the approved plans must be brought to the attention of the DWM sewer inspector. Once approved, the drawings must be submitted to the DOB at the following address within 30 days:

Department of Buildings
City Hall, Room 906
121 N. LaSalle Street
Chicago, Illinois 60602

The as-builts of the grading plans, drainage plans, sewer details, and BMP details must be submitted on a compact disk (CD) in electronic *.TIF format. Electronic files must be submitted using the file naming conventions from Chapter II, Section 2.1.3 with the descriptive suffix "as-built".

2.0.6 SITE INSPECTIONS

City personnel (DWM and DOB) will have the right to inspect the portions of the Regulated Development subject to the Plan without prior notice during regular business hours. Inspections, both during and after construction, will be conducted on selected sites as determined by the City.

PART 3 – RATE CONTROL OF STORMWATER

3.0 APPLICABILITY

The flow rate control requirements discussed in this section apply to all Regulated Developments. All of the items discussed in Part 3 of this chapter must be included in each Plan and be submitted to the DOB for review and approval.

3.1 DESIGN REQUIREMENTS

All Regulated Developments must be designed to manage the 100-year storm event and to provide means to manage and direct overflows to the public right-of-way. The maximum allowable rates of discharge are discussed in Sections 3.3 and 3.4 of this chapter. The number, size, and locations of sewer connections are also regulated. Applicants may need to provide detention as part of a Plan to accommodate the allowable size of a stormwater connection to the City sewer system.

A minimum of 0.1 feet of freeboard from the high-water level within any detention facility to the overflow to the right-of-way must be provided. An additional 0.1 feet (minimum) freeboard must be provided from the lowest overflow elevation leading to an adjacent property. No more than 400 square feet of impervious surface area can sheet flow to the public right-of-way without detention. This sheet flow requirement shall not apply to fueling stations.

3.1.1 LOT-TO-LOT BUILDINGS

With respect to Developments that are totally or almost totally (more than 85%) occupied by structures or buildings, including basements, the required storage shall be based on a minimum 10-year magnitude storm event for the building area. Building is defined as the greater of either the footprint of the foundation walls or footprint of the building at ground surface subject to Chapter II, Section 3.1.2- Buildings With Tributary Sidewalls or Significant DWF. For any remaining open space, the required storage shall be based on a 100-year magnitude. Means to safely accommodate all storm events up to a 100-year magnitude, via overflows to the right-of-way, must also be provided. Buildings with underground storage vaults must have plans (with backup calculations) sealed by a licensed architect or structural engineer to safeguard against structural failure of floor foundations and downspouts due to maximum hydrostatic pressures during sewer surcharges.

3.1.2 BUILDINGS WITH TRIBUTARY SIDEWALLS OR SIGNIFICANT DWF

If the sidewalls of a building are tributary to the connection, via side gutters or multi-level roofs, then 25 percent of the face of the critical sidewall must be considered as part of the drainage area, but not the release rate. Reference Section 3.4.5 of this chapter. This critical sidewall is the face of the building with the most surface tributary to the detention system. If a site is less than 15,000 square feet in area, standard stormwater detention requirements will apply if the drainage area with sidewalls and/or the average DWF component (without peaking factor) equals or exceeds 15,000 square feet. The conversion of average DWF to area is based on 1.0 cfs into one acre (43,560 square feet). If with the aforementioned considerations, the drainage area is less than 15,000 square feet, the size of the connection may dictate adequate stormwater management measures of detention be implemented.

3.1.3 OPEN SPACE DISCHARGING TO COMBINED SEWERS

Any at-grade impervious open space discharging to a combined sewer, where more than 7,500 square feet of substantially contiguous area will be created, reconstructed or resurfaced (scarified with bituminous or concrete overlay), will be subject to rate control requirements. In order to maximize the capacity of the sewer system in a manner that is economically reasonable, developments with more than 75 percent of substantially contiguous at-grade open space that is conducive to the ponding of surface waters shall not have a maximum release rate greater than 0.75 cfs per acre unless limited by the minimum practical rate of discharge, which is

accomplished by a 3-inch vortex restrictor with a 0.15 cfs release rate. This requirement shall not apply to fueling stations and Developments that discharge to waterways.

3.1.4 DIRECT DISCHARGING INTO WATERS

A Development that has access to an adjacent waterway must discharge its stormwater to that waterway. For Developments that discharge stormwater directly to Waters, the maximum release rate shall be 1.0 cfs/acre for at-grade open space. There is no release rate requirement for roof areas (without vehicular parking or waste storage) of any onsite buildings, provided the roof areas bypass the Development's stormwater detention system. Any at-grade impervious open space discharging to a waterway, where more than 7,500 square feet of substantially contiguous area will be created, reconstructed or resurfaced (scarified with bituminous or concrete overlay), will be subject to rate and volume control requirements. Any development over 5 acres with existing discharge to a waterway shall not exceed such discharge rates , to the extent possible, for all storm events up to a 10-year, including any new roof areas. All overflow pathways from the stormwater management system must be directed towards the waterway.

The 1.0 cfs/acre release rate to Waters does not apply to Developments that discharge to Lake Michigan, Lake Calumet, or the Calumet River North of the O'Brien Lock and Dam at 134th Street. There are no rate control requirements for discharge to these Waters.

3.1.5 BUILDING REHABILITATIONS

With respect to a project that consists of a building rehabilitation, the peak discharge to the City's sewer systems must be delayed or decreased if any new roof areas (proposed over additional stories) and/or additional DWFs (converted to equivalent area) exceed 15,000 square feet. This may be accomplished by disconnecting existing downspouts, installing controlled roof drains or green roof systems.

3.2 RATE CONTROL BMPS

The BMPs below, if properly installed, utilized and maintained, shall be acceptable for use in meeting the Ordinance's rate control requirement. Other BMPs may be acceptable, but only upon demonstration that the BMP will control flow rate as required and upon prior approval by the Commissioner. The following tables present minimum design requirements for the BMPs

that can be used to meet the requirements for rate control. Those BMPs with asterisk may also be used for groundwater infiltration purposes.

Rate BMP	**Minimum Design Requirements**
Restrictors	The maximum discharge released is equal to or less than the maximum permissible release rate for the site.
	DWM 3-inch and 4-inch vortex restrictors utilize 8-inch diameter outlet pipes to achieve release rates of 0.15 and 0.25 cfs, respectively.
	When specifying and installing vortex restrictors, the 3-inch vortex restrictor shall be obtained from DWM, and the 4-inch vortex restrictor shall be obtained from an approved manufacturer.
	Flow-restricting outlets shall be submerged in a catch basin, (i.e., with a half trap and 2-foot minimum sump), to prevent clogging.
	Storage facilities upstream of restrictor with half trap must be clear of standing water.
	The minimum restrictor plate size is 2.5” in diameter.
	The restrictor must be easily accessible for DWM inspection and for owner inspection and maintenance.
	For sites that combine sanitary sewage and stormwater downstream from a restrictor, see the Stormwater Manual, Section 2.4.1 for recommended design guidelines.

Detention Basins	If the outlet from a dry bottom basin is less than 2 feet above of the crown of the combined outlet sewer, a check valve must be installed to prevent combined sewerage from backing up into the basin.
	Dry bottom basins must be capable of draining within 72 hours of a storm event.
	Maintenance access to the facility must be provided.
	The bottom of the storage area in a detention basin must be above the seasonally high groundwater table.
	For wet detention basins*, a safety ledge at least 4 feet in width must be constructed at a depth of 1 to 2 feet below the normal water surface.
	Wet detention basins without vegetation shall be at least 3 feet deep. The side slopes shall be no steeper than 3H:1V without erosion protection. The sides of the pond that extend below the safety and aquatic benches to the bottom of the pond must have a slope that will remain stable, and be no steeper than 2H:1V. For dry bottom detention basins, side slopes shall be 4H:1V or flatter.
	A sediment forebay shall be incorporated into all wet bottom detention basins.
	After excavation and grading of a stormwater wetland basin, at least 6 inches of topsoil must be applied to the basin bottom and sideslopes. Reference Stormwater Manual.
	At sites where infiltration is too rapid to sustain permanent soil

	saturation, analysis of the proposed plantings or intended wetland functions must be undertaken. If needed, an impermeable liner (geotextile fabric) shall be designed to maintain adequate hydrology. Where the potential for groundwater contamination is high, such as runoff from sites with a high potential pollutant load, the use of a liner is required.
	Basins incorporating wetlands shall include a buffer to separate the wetland from surrounding land where feasible.

Detention Vaults	Detention vaults under buildings designed only for a 10-year storm capacity, shall be provided with means to safely accommodate 100-year overflows.
	Buildings with underground storage must have plans (with backup calculations) sealed by a licensed architect or structural engineer to safeguard against structural failure of floor foundations and downspouts due to maximum hydrostatic pressures during sewer surcharges.
	Proper ventilation of underground vaults for buildings must be provided in accordance with Building Code Articles 9 and 11, as applicable, to equalize interior downspout pressures and to prevent siphoning effects through the piping and sewer systems.
	Vaults must be designed to be water-tight unless used for groundwater infiltration purposes or unless the bottom of the vault is at least 7 feet above the groundwater table.
	For vaults using infiltration*, soil must have at least a 0.5 in/hr infiltration rate or greater and the bottom of the vault must be at least 3.5 feet above the groundwater table when connected to a combined sewer. Means to control sediment and/or debris from entering the vault must be provided. Pretreatment measures are required for all infiltration vaults.
	If the outlet from a vault is lower than the crown of the combined outlet sewer, a check valve must be installed to prevent combined sewerage from backing up into the vault.

Oversized Pipes	Locking manhole covers shall be provided for pipe diameters 4 feet and larger in areas where children may be present.
	If the outlet from an oversized pipe is lower than the crown of the combined outlet sewer, a check valve must be installed to prevent combined sewerage from backing up into the oversized pipe.
	Structures for oversize pipe must be properly sized.

Parking Lot Detention	Maximum allowable ponding in a parking lot shall be 12 inches. If more than 10 inches of ponding, the O&M Plan must indicate such.
	Adequate visible warning must be provided for any depressed islands during flood stage.

Rooftop Detention	Provide a grading plan of the roof to verify available storage.
	Provide details and hydraulic characteristic of any controlled roof drains in the Plan
	Provide scuppers or overflows to accommodate 100-year storm events.
	Include approval and seal from a Registered Structural Engineer or Licensed Architect.
	In addition to other applicable code requirements, Sections 18-29-1105, 1106, and 1110 of the Municipal Code must be complied with.

3.3 STANDARD MAXIMUM RELEASE RATE

All Regulated Developments must control the 100-year storm event. Regulated Developments of 7,500 square feet to 1.75 acres in size have the option to accept a standard maximum release rate for the site, as shown below in the Maximum Release Rate Control Chart, or to calculate their own maximum release rate, using the procedures in Section 3.4 of this chapter. The standard maximum release rate is as follows.

- For sites between 7,500 square feet and 21,780 square feet (one-half acre), the maximum allowable release rate is 0.15 cfs, the maximum release rate from a 3-inch vortex restrictor. The required storage is based on 0.15 cfs, subject to Chapter II, Section 3.5- Dry Weather Flows.
- For sites between 21,780 square feet (one-half acre) and 43,560 square feet (one acre), the maximum regulated release rate is a linear interpolation between 0.15 cfs (equivalent to use of 3-inch vortex restrictor on a one-half-acre site) and 0.25 cfs (equivalent to use of 4-inch vortex restrictor with 0.25 cfs release rate on a one-acre site), respectively. The required storage is based on the linear interpolation of the two release rates, subject to Chapter II, Section 3.5- Dry Weather Flows.
- For sites between 43,560 square feet up to 76,230 square feet, the maximum allowable release rate is 0.25 cfs, the maximum release rate from a 4-inch vortex restrictor. The required storage is based on 0.25 cfs, subject to Chapter II, Section 3.5- Dry Weather Flows.

- For sites larger than 76,230 square feet (1.75 acres), Applicants must compute their own maximum release rate using the procedures in Section 3.4 of this chapter.

The above requirements are illustrated in the following chart.

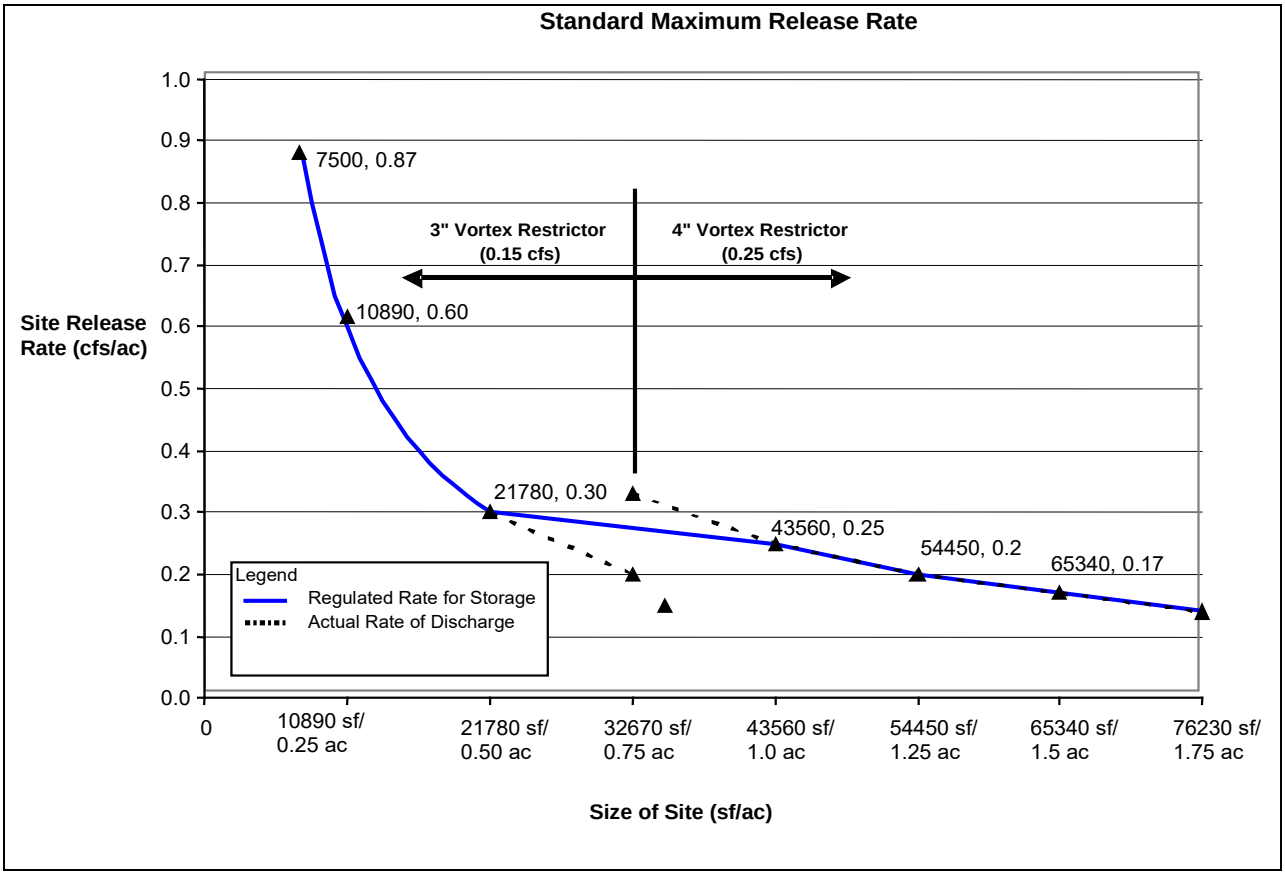

3.4 COMPUTED MAXIMUM RELEASE RATE

In lieu of utilizing the Standard Maximum Release Rate, the Applicant may submit documentation in support of a computed maximum release rate. The 5-year capacity of a sewer line (in cfs/acre) shall be based on the ratio of its full flow segment capacity (in cfs) to its corresponding tributary area (in acres). The computed maximum release rate shall be the lesser of the "Outlet Sewer Capacity" at the downstream end of the system and the critical "Local Sewer Capacity" as defined by sewer sizes 3.5 feet in diameter or smaller. The following subsections describe the computation to be followed in determining the computed maximum release rate for the Regulated Development.

3.4.1 OUTLET SEWER CAPACITY

The city's combined sewer system conveys flow to MWRDGC interceptor sewers. Outlet sewers are found near the outfall to a waterway or near an MWRDGC, TARP structure. Outlet capacities consider the interconnected network of the sewer system. For the purpose of

determining maximum release rates, the capacity of each auxiliary sewer shall be assumed to be the associated outlet sewer capacity. Outlet sewer capacities (in cfs/acre) of the sewer system shall be obtained from a map and table in Appendix III-A of this chapter.

3.4.2 DRAINAGE AREA COMPUTATIONS

The corresponding drainage area (in acres) to a sewer main segment shall be determined from the Sewer Atlas Maps and Drain Atlas Maps. A Sewer Atlas Map(s) delineating the assumed drainage boundary must be submitted with the release rate calculations.

The upstream limits of a sewer line shall be identified by summit manholes or back flow connections to other sewer lines. Drainage area boundaries shall be assumed along right-of-way and property lines. If there are no property lines shown on the Drain Atlas to delineate the drainage boundary, the largest possible drainage area must be assumed. Otherwise, a drainage plan, generated by field reconnaissance or other documentation, must be presented for justification of existing conditions. If there are main sewers on either side of a standard city block, then the main sewer in question shall be assumed to drain each half block (up to the alley) immediately adjacent to it. If there is no main sewer on the other side of the half block, then the main sewer shall be assumed to drain the entire block.

The drainage area to a Development's connection point must be included within the drainage area of the main sewer line. Vacant areas that are currently undrained, must be included in the delineation. A reasonable estimate of vacant area that may be tributary to the main sewer line (upon future development) must be considered in the drainage area delineation.

An adjustment for land use to the computed drainage area of the main sewer line must be made. Adjustment factors to the drainage areas shall be based on a percentage of each land use type. Land use may be determined from aerial photographs. It shall be assumed that a typical residential drainage area, 1.0 acre in size, will yield a 5-year discharge rate of 1.0 cfs. Therefore, if the land use within the drainage area is primarily residential, no adjustment factor to the computed drainage area is required. If the land use within the drainage area is primarily commercial, as in the Central Business District, an adjustment factor of 1.3 must be multiplied to the drainage area. If the land use within the drainage area is primarily industrial, an adjustment factor of 1.5 must be multiplied to the drainage area.

3.4.3 LOCAL SEWER CAPACITY

The local capacity of a sewer line (in cfs/acre) shall be obtained by the ratio of the sewer segments capacity (Q) divided by the respective drainage area adjusted for land use (in acres). In computing the capacity of the local sewer, the proposed drainage area from the site (in acres) must be included (if applicable) in the drainage area (in acres) of the local sewer.

3.4.4 CRITICAL LOCAL SEWER CAPACITY

The critical local sewer capacity (or lowest cfs/acre) shall be the sewer segment with the lowest cfs/acre within a sewer line. Typically, the critical local sewer capacity can be found at the downstream end of a sewer line, but each upstream sewer segment to the point of connection shall be examined to determine the critical section.

3.4.5 MAXIMUM RELEASE RATE

The critical local sewer capacity shall be compared with the outlet sewer capacity of the system. The maximum release rate for the site shall be based on the lesser of the two values. This release rate may have to be adjusted pending applicable site conditions specified in Sections 3.1.2, 3.4.1, 3.5 and 3.6 of Chapter II, and Sections 3.1.3 and 4.1.4 of this chapter. The maximum release rate typically applies to all storm events up to a 100-year magnitude subject to Section 3.1 of this chapter. The proposed discharge rate from a site must be less than or equal to the existing discharge rate unless otherwise approved by DWM. The maximum discharge rate (cfs) from the Regulated Development shall be based on the maximum release rate (cfs/ac) times the disturbed land area (ac). An example of the maximum release rate computations is presented in the Chicago Stormwater Manual.

3.5 COMPLIANCE WITH APPLICABLE SEWER REQUIREMENTS AND STANDARDS

In making release rate calculations, Applicants must refer to Chapter II, Sewer Requirements and Standards to determine the following: where to make a connection to the city sewer system; the number of connections; and the size of the connections impacting the maximum release rate from the site. The Applicant must also take into account any other applicable special requirements for flow diversions, multiple connections, and dry weather flows.

3.5.1 REQUIREMENTS FOR MULTIPLE CONNECTIONS

Except for developments that are less than 0.5 acres or which adopt a 0.15 cfs –3” vortex restrictor(s) for the site, an alternative analysis is required when using multiple connections. See

Section 3.3 of this chapter- Standard Maximum Release Rate. The analysis must demonstrate that the selected alternative will maximize use of the sewer system, thereby optimizing the hydraulic benefit to the surrounding neighborhood. At least two alternatives must be examined. The alternative analysis must examine connection points to different sewer lines or different split percentages in flows.

The alternative analysis must include a tabulation comparing the existing and proposed 5-year capacities (in cfs/acre) of the sewer segment where each connection is made. See Section 3.4.3 of this chapter- Local Sewer Capacity. The existing/proposed drainage patterns from the site along with an estimation of the existing/proposed DWF component must be considered in the tabulation. In computing the existing capacity of a sewer segment (in cfs/acre), existing runoff conditions from the site shall be based on the area (in acres) tributary to the connection point. The proposed drainage area from the site (in acres) can be assumed as the total discharge rate (in cfs), from the Development converted on a one to one basis to acres. Any existing/proposed DWF must be considered (without peaking factor) as part of the total discharge from the Development.

If previous means of rate control have not been provided or are inadequate, then the proposed release rate from a development must always be less than the existing discharge rate. For developments that do not meet the aforementioned criteria or that consist of an area 5 acres and larger, may require, as an alternative, upgrading the sewer system in the street. See Chapter II, Part 4.0 for main sewer improvements in the public right-of-way.

3.6 RESTRICTOR CALCULATIONS

Restrictors must be sized in accordance with the maximum release rate and upstream tributary area. When using the standard release rate, the City's 3-inch or 4-inch vortex restrictors must be used as shown on the chart above, "Standard Maximum Release Rate". When other control structures are used, the discharge shall be calculated using the orifice equation with the correct discharge coefficient (Cd) as follows:

- Cd= 0.61 for sharp-edged plate bolted to a catch basin
- Cd = 0.82 for pipes less than 2 feet long grouted into sewer

The hydraulic head on a restrictor must be computed from the high water elevation to the upper invert of the half-trap with restrictor.

3.7 REQUIRED STORAGE

The amount of required 100-year storage must be based on the Modified Rational Method. The City of Chicago's rainfall intensities are provided in Appendix III-B and (effective September 1, 2014) are now based on Bulletin 70 regional rainfall data. If the size of the Regulated Development is over 20 acres or if dynamic flood routing computations become necessary, such as multiple flow control restrictors at different elevations, then a computational hydrograph method must be used utilizing Bulletin 70 regional rainfall data and Huff distributions from the ISWS including a critical duration analysis for 30 minute, 1 hour, 2 hour, 3 hour, 6 hour, 12 hour, 18 hour, and 24 hour storm durations. The C-values or curve numbers (CN) to be used in the analyses shall be based on the following:

		C-values	CN[1]
• Asphalt Roof, Pavement	=	0.95	98
• Gravel	=	0.70	89-91
• Sandy Soil, flat 0% to 2%	=	0.18	61[2]
• Sandy Soil, ave 2% to 7%	=	0.27	65[2]
• Sandy Soil, steep >7%	=	0.36	70[2]
• Heavy Soil, flat 0% to 2%	=	0.30	74-80
• Heavy Soil, ave 2% to 7%	=	0.42	78-83
• Heavy Soil, steep >7%	=	0.47	80-85
• Woodlands, flat 2%	=	0.39	70-77
• Dry bottom basins to HWL	=	0.75	91-92
• Wet bottom basins to HWL	=	1.00	100
• Native Vegetation w/prepared soils	=	0.10	39
• Green Roof (Reference USGBC, LEED Reference Guide, current version)			

Notes:

1. Where an upper and lower limit is shown for CN, the lower limit assumes hydrologic soil group C and the upper limit assumes hydrologic soil group D. See SCS TR-55 for more information. Soil borings will be required to substantiate use of group C soils.
2. Assumes hydrologic soil group B. Soil borings will be required to substantiate this soil group.

3.7.1 RESIDENTIAL LAND USES—RIGHT-OF-WAY STORAGE

A Regulated Development for residential purposes shall be designed to accommodate the 100-year storm event by providing a corresponding amount of flood storage. Flows exceeding the

required onsite storage may be allowed to overflow to the right-of-way, if proper site and roadway grades permit. Right-of-way storage may be utilized as long as onsite storage is provided for a minimum of the 5-year storm event. There must be a sufficient amount of available onsite storage and right-of-way flood storage to meet the 100-year storage requirement. Right-of-way flood storage shall be permitted under the following conditions:

- Right-of-way flood storage (i.e., ponding) is limited to half of the street (from centerline to sidewalk) along the frontage of the property.
- Street grades along the centerline and gutter must allow for such ponding.
- Right-of-way flood storage must meet freeboard requirements to adjacent property.

Right-of-way flood storage is not permitted in alleys, arterial streets or in areas tributary to street viaducts. It is also not permitted in lot-to-lot developments, mixed-use residential developments or when building downspouts along the frontage are splashed directly to the right-of-way without detention.

3.7.2 COMMERCIAL/ INDUSTRIAL/ PUBLIC DEVELOPMENTS

Subject to Sections 3.1.1 and 3.1.5 of this chapter, the amount of required onsite storage shall be based on a 100-year storm event. Use of the right-of-way for storage shall not be permitted, unless approved by a Plan variance.

3.8 AVAILABLE STORAGE

3.8.1 CALCULATION OF STORAGE

Volume of available storage for detention ponds and parking lots must be calculated using the frustum of cone equation: Volume = (H/3)*(A1+A2+SQRT(A1*A2)), where H=depth and A= areas between the depth. If the topography precludes the use of the frustum of cone equation, as in the case of calculating street storage (if any), then the average end area method with minimum cross sections of every 25 feet shall be used.

3.8.2 DETENTION CREDIT FOR STORMWATER CAPTURE FACILITIES

Special storage facilities designed to capture and reuse stormwater shall be entitled to receive credit toward detention storage for up to 10 percent of the total required detention storage. The stormwater capture facility may be separate or partitioned from the main detention facility and must be designed to be dewatered within 14 days of filling. A gated or valve connection must be

provided between the stormwater capture facility and the main detention facility that can be opened to create a freely draining condition when there is no need for the captured stormwater to be reused (such as winter months for irrigation systems). If the stormwater capture facility is hydraulically connected to a combined sewer, a check valve must be installed to prevent sewage back-up if the connection is within 2 feet of the crown of the combined sewer.

PART 4 VOLUME CONTROL OF STORMWATER

4.0 APPLICABILITY

The volume control requirements discussed in this section apply to all Regulated Development. Additional requirements apply to Regulated Developments that discharge to Waters as defined in the Ordinance or to a municipal separate storm sewer system.

4.1 DESIGN REQUIREMENTS

4.1.1 GROUNDWATER INFILTRATION BMPS

For use of standard infiltration BMPs for groundwater recharge, subsoil infiltration rates must be 0.5 inches per hour or greater. If subsoil infiltration rates are less than 0.5 inches per hour, a prepared soil and underdrain system shall be used to facilitate implementation of volume control BMPs. When infiltration is claimed as a benefit for computing required rate control storage, the underlying soil must have a permeability of 0.5 in/hr or greater. The high groundwater table must be at least 2.0 feet below the bottom of all proposed groundwater infiltration BMPs. If connected to a combined sewer system, the high water table must be at least 3.5 feet below the bottom of the BMP.

Infiltration structures with open bottoms or perforated piping require special care during maintenance. Such infiltration systems may become damaged by standard vactor truck maintenance procedures. Special lids as indicated in Chapter II, Appendix II-A shall be used to identify these infiltration systems. Groundwater infiltration BMPs must be located at least 10 feet down gradient of existing building structures and foundations; otherwise, the affidavit in Appendix IIB must be submitted.

4.1.2 INFILTRATION EXCEPTION

The City will not approve the use of groundwater infiltration BMPs in circumstances where their use would violate any requirement of federal or State law, or any other provision of the Municipal Code, or any regulation issued under federal or State law or the Code, or where their use would breach any agreement that prohibits their use. Examples of circumstances where use of groundwater infiltration BMPs will not be approved include the following: (a) in portions of Developments requiring Spill Prevention, Control and Countermeasure Plans pursuant to 40 CFR 112 for safe handling of oil and oil products; (b) in portions of Developments permitted pursuant to RCRA Part B (35 Ill. Admin. Code Part 724) related to Hazardous Waste Management; (c) in portions of facilities subject to the permit requirements of Chapter 11-4, articles XIX and XX of the Municipal Code regarding Recycling Facilities and Urban Farm Accessory Composting Permits; or (d) in portions of Developments subject to a court or agency order that prohibits the use of groundwater infiltration BMPs.

4.1.3 DRAINAGE AREAS AND VOLUME CONTROL

If a portion of a Development lacks adequate volume control measures, the Applicant must construct a correspondingly oversized volume control BMP in another area of the Development to compensate. The maximum credit that may be claimed for an oversized BMP shall not exceed the amount of runoff generated from one-inch of rainfall over the tributary area to the oversized BMP.

4.1.4 OVERSIZED STORMWATER DETENTION

Subject to approval, the Applicant may show that retention of water captured by a groundwater infiltration BMP is impractical due to insufficient depth to groundwater, or the presence of environmental conditions described in Section 4.1.2 of this chapter. In addition, for Developments that have more than 85 percent of the site covered by structures and where green roofs are impractical, oversized detention may also be utilized. For these Developments, oversized stormwater detention may be utilized to fulfill the volume reduction requirements over impervious areas. This volume shall be provided in addition to any storage volume required for rate control. If additional volume is provided, the release rate shall be reduced to fully utilize the additional volume for a given design storm (up to a 100-year storm event). If this reduced release rate is less than 0.15 cfs, then a 3-inch vortex restrictor may be used subject to Chapter II, Section 3.5.

4.1.5 VOLUME CONTROL STORAGE

The available storage for volume control shall be in addition to the storage required for rate control if the available storage for volume control is reflected in the runoff coefficient, or C-value, as initial rainfall abstractions. In this case, the C-value as listed in Section 3.7 of this chapter is utilized for the BMP. Alternatively, the following equation may be used to determine a C-value; C = 1- [(BMP storage volume)/(rainfall volume)] provided that the BMP storage volume is accessible to the generated runoff. Reference the Stormwater Manual for further clarification.

The available storage for volume control may be included with the detention storage for rate control if a C-value of 1.0 is utilized for the BMP. In this case, the storage volume provided by the BMP may be used towards the detention storage. Furthermore, if the existing subsoils below the aggregate are permeable (greater than 0.5 in/hour), then the percolation rate within such subsoils may be used in addition to the maximum release rate in determining a Development's detention storage requirement. Percolation rates must be verified in accordance with Section 4.3 of this chapter.

4.1.6 DIRECT DISCHARGE TO WATERS

For sites that discharge stormwater directly to Waters, there are no volume control requirements for roof areas of any onsite buildings, provided that the roof runoff does not come into contact with any at-grade impervious surfaces and by-passes all volume and rate control BMPs. Runoff from all at-grade impervious surfaces shall be routed through a volume control BMP prior to its discharge into Waters or MS4. The receiving BMP shall be sized to capture the amount of volume control storage (0.5-inches over the impervious areas) required. If groundwater infiltration is impractical for reasons described in Section 4.1.2 of this chapter, the captured volume shall be released at a maximum rate of 0.04 cfs per acre. If the computed volume control release rate is less than 0.15 cfs, then a 3-inch vortex restrictor shall be used. A two-staged outlet structure shall be utilized to fulfill the 100-year stormwater detention requirements beyond those of the volume control requirement.

4.2 VOLUME CONTROL BMPS

The BMPs below, if properly installed, utilized and maintained, are acceptable for use in meeting the Ordinance’s volume control requirement. A volume control BMP that infiltrates to subsoils

must be designed such that adjacent building basements and foundations are not adversely impacted. If sufficient clearance to existing building cannot be met, the affidavit in support of stormwater infiltration in Appendix II-B must be provided. Other BMPs may be acceptable, but only upon demonstration that the BMP provides the required volume control benefits. The following table presents minimum design requirements for BMPs that can be used to meet the requirements for volume control. Those BMPs with asterisk may also be used for groundwater infiltration purposes.

Volume Control BMP	**Minimum Design Requirements**
Bioinfiltration Systems	The design of a bioinfiltration facility shall allow no more than 12 inches of depressional ponding in the vegetated area.
	The growing medium soil must be a mix of 40% sand, 30% topsoil and 30% compost. The soil must be at least 2 feet deep and must be 4 inches deeper than the largest planted rootball.
	The underlying soil shall have a permeability of 0.5 in/hr or greater. If the underlying soils do not meet the permeability requirement, underdrains may be installed.
	Bioinfiltration systems must be designed to drain within 5 days of a storm event.
	Soil borings or other data must verify that the depth to groundwater table is greater than 2 feet from the bottom of the BMP (lowest excavated elevation), or 3.5 feet when connected to a combined sewer system.
	The water flowing to a bioinfiltration facility requires pretreatment for sediments. Where such pretreatment is not provided by an upstream BMP facility, it must be included in the bioinfiltration facility design.
	The bioinfiltration facility shall be located at least 10 feet down gradient from buildings, otherwise submit affidavit in Appendix IIB.
	Maintenance access to the facility must be provided.
	Measures to avoid clogging and compaction of the bioinfiltration facility are required during construction.
	If the bioinfiltration system includes storage in the void spaces of an aggregate layer, the aggregate layer must be completely surrounded by filter fabric and must be comprised of crushed angular stone free of fines. For IDOT gradations CA-1 and CA-7, the maximum aggregate porosity of 0.38 may be used.

Drainage Swales	Velocities must be 1 ft/sec or less during the 2-year storm event.
	Longitudinal slope must be between 0.5 and 2.5%
	Utilize 3H:1V side slopes or flatter. Use slope protection when side slopes are steeper than 3H:1V.

	Surface volume control storage must be provided behind check dams.
	The growing medium soil must be a mix of 40% sand, 30% topsoil and 30% compost. The growing medium soil must be at least 2 feet deep.
	If the drainage swale includes storage in the void spaces of an aggregate layer, the aggregate layer must be completely surrounded by filter fabric and must be comprised of crushed angular stone free of fines. For IDOT gradations CA-1 and CA-7, the maximum aggregate porosity of 0.38 may be used.
	Soil borings or other data must verify that the depth to groundwater table is greater than 2 feet from the bottom of the BMP (lowest excavated elevation), or 3.5 feet when connected to a combined sewer system.
	The underlying soil shall have a permeability of 0.5 in/hr or greater. If the underlying soils do not meet the permeability requirement, underdrains may be installed.

Green Roofs	A structural engineer or architect's seal must be included on the Plans to approve of load-bearing capacities of the proposed roofs.
	The maximum permissible slope for extensive green roof systems shall be 25 percent.
	The maximum permissible slope for intensive green roof systems shall be 10 percent.

Natural Landscaping	Areas of natural landscaping shall be planted with deep-rooted vegetation.
	The soil must consist of sandy loam, loamy sand, or a loam with clay content less than 25% and sand content greater than 50%, or a prepared growing medium soil with a mix of 40% sand, 30% topsoil and 30% compost.

Permeable Paving [1]	Subsoils must have at least a 0.5 in/hr infiltration rate or greater. Otherwise, an underdrain system must be used if soil infiltration rates do not meet this requirement.
	The bottom of the aggregate shall be at least 2 feet above the groundwater table or bedrock, 3.5 feet if discharging to a combined sewer.
	Compaction of the soils underlying the permeable pavement system must be avoided during construction.

[1] NOTE: If a permeable paving BMP is used, a civil engineer must certify by letter that the subsoil is suitable for permeable pavement usage.

	Permeable pavement or infiltration systems must be situated at least 10 feet down gradient from buildings that are not waterproofed against basement seepage, otherwise submit affidavit in Appendix II-B.
	Minimum and maximum slopes on permeable paving shall be 0.5 percent and 5 percent, respectively.
	All aggregate material shall be crushed angular stone and free of fines. For IDOT gradations CA-1 and CA-7, the maximum aggregate porosity of 0.38 may be used.
	When using an underdrain system, the water level within the underlying stone base may not rise to within 8 inches of the permeable pavement surface for a 10 year storm event.
	The underlying stone base must be designed to drain within 48 hours of a storm event.
	When using an underdrain system, any impermeable subsoil material must be graded with a minimum 1 percent slope to such system, and the top 3 inches of impermeable soil must be mixed with at least 3 inches of sand.
	For pervious concrete, signage must be placed on the property that states, "This surface is pervious concrete pavement. No sealcoat or overlay material is to be used on this pavement. Call XXX-XXXX before treating this pavement with any material." Insert the number of the property management company or owner.
	When an area of conventional impervious pavement drains toward permeable pavement, a maximum ratio of 3:1 impervious to permeable is allowed.

Rooftop Runoff BMPs (Planter Boxes, Rain Barrels and Cisterns)	If a rain barrel or above ground cistern will hold more than a 6-inch depth of water below the drain, it must be securely covered to prevent small children from gaining access to the standing water and to prevent mosquitoes from breeding.
	Above ground cisterns with a capacity of more than 55 gallons must be designed with proper structural foundations.
	Rain barrels and cisterns must include inlet screens to minimize the number of foreign objects entering the vessels.
	Excess water entering the rain barrel or cistern must be designed to overflow to a treatment train or stormwater conveyance system.
	The system must have a convenient and functional means of water withdrawal.
	The system, if applicable to stormwater detention, will receive credit for up to 10 percent of the required site storage and must be drained within 14 days of a storm event.

Stormwater Trees	New trees or existing trees must be on the development site within 20 feet of an on-site impervious surface to count as a volume control BMP. They must also be at least 2 inches in diameter at 4.5 feet above ground level.

Vegetated Filter Strips	The entire filter strip area shall be more than 2 feet above the groundwater table.
	Filter strips must have longitudinal slopes of 1 to 5 percent (2 percent optimum) in the direction of flow.
	The longest flow path of the contributing drainage areas must not exceed 75 feet.
	A level spreader is required whenever the tributary area is not uniformly sloped toward the filter strip..
	When filter strips are used to accept roof runoff for the purposes of volume control, a level spreader must be utilized. The hydraulic loading rate may not exceed 75 feet of roof per one foot of filter strip width.
	The soil must consist of sandy loam, loamy sand, or a loam with clay content less than 25% and sand content greater than 50%, or a prepared growing medium soil with a mix of 40% sand, 30% topsoil and 30% compost. The approved soil type must be at least 18 inches deep.
	The slope up gradient of a level spreader must be less than 1 percent for at least 20 ft while the slope down gradient must be less than 6 percent.
	The length and depth of the level spreader must be at least 6 inches.
	Level spreader must be absolutely level along its width.

4.3 GEOTECHNICAL INVESTIGATIONS

Appropriate hydraulic calculations must be submitted to substantiate proper function of the BMP. The Chicago Stormwater Manual depicts a map showing general areas of the City where sand and clay predominates.

If a site utilizes a subsurface infiltration BMP or detention storage BMP that is not water-tight, and is connected to a combined sewer system, via underdrain or piped connection, then soil boring information must be submitted. As part of any soil boring submission, at least one soil boring must be obtained for every 15,000 square feet of the BMP footprint, and at least 2 soil borings are required if used to determine groundwater elevation.

If the in-situ soil is found to be uniform with sand, or coarser material, for least 2.0 feet below the proposed bottom of the BMP, then a maximum infiltration rate of 1.4 inches per hour may be assumed. Otherwise, percolation tests in the field must be performed to justify a higher infiltration rate. If percolation testing is necessary, at a minimum, one percolation test must be provided for each separate BMP area. If a BMP area is larger than 15,000 square feet, additional percolation tests will be required for every 15,000 square feet of BMP area. If the BMP is in silty-clay or silty-sand without a piped connection to an outlet sewer, percolation testing is required. Testing must follow the appropriate standards from the American Society for Testing and Materials (ASTM) International or as set forth in the Chicago Stormwater Manual. When the percolation testing has been done, the maximum design infiltration rate shall be 3.6 inches per hour.

PART 5 EROSION AND SEDIMENT CONTROL

5.0 APPLICABILITY

All Regulated Developments that discharge stormwater to any location offsite, including but not limited to a waterway, water body, storm sewer or combined sewer, must install and maintained soil erosion and sediment control measures during construction to reduce or prevent the discharge of sediment and other pollutants in stormwater runoff from the Regulated Development.

5.1 EROSION AND SEDIMENT CONTROL BMPS

All erosion and sediment control BMPs shall be implemented in accordance with the standards and specifications set forth in the “Illinois Urban Manual” published by IEPA and the NRCS. It is available at http://www.il.nrcs.usda.gov/technical/engineer/urban/contents.html.

5.2 SUBMITTAL REQUIREMENTS

The City requires the following submittals for compliance with these Regulations.

5.2.1 DEVELOPMENTS DISCHARGING TO COMBINED SEWERS

Applicants with Regulated Developments discharging to combined sewers must submit the DWM's affidavit (and checklist) to the DOB, stating that they will comply with all appurtenant sediment and erosion control measures during construction. A copy of the affidavit must be kept on site during construction and made available upon request to City personnel. See Appendix II-C.

5.2.2 DEVELOPMENTS DISCHARGING TO WATERS

Any Development discharging to a local waterway or storm sewer, regardless of size, must develop and submit to the DOB, a detailed Erosion Control Plan (ECP) that includes the following.

- Temporary erosion and sediment control measures applicable to each phase of construction activity
- Permanent stabilization measures including landscape seeding and sodding plans
- Means of accommodating 2-year stormwater flows onsite and by-passed during construction
- A maintenance schedule for each erosion control measure. During construction, each erosion control measure shall be inspected weekly or after more than 0.5-inch of rainfall.
- Means to protect infiltration BMPs during construction

A copy of the ECP must be kept onsite during construction and made available for review upon the request of a City field inspector.

Discharges to waterways shall only comprise of stormwater or groundwater. Clean process waters may be discharged pending prior approval by MWRDGC. See DWM booklet "Permit Requirements and Fees", latest edition, for submittal of permits from other regulatory agencies. Signage identifying the discharge as storm only, indicating the address of the discharger, must be posted and be visible along the waterway at the outfall pipe. See Appendix II-A Sheet A.25.

Applicants with Regulated Developments over one acre must comply with all IEPA NPDES requirements for construction activity discharging to Waters. A copy of any SWPPP or Notice of Intent prepared pursuant to the NPDES program must be kept on site during construction and made available upon request to City personnel.

PART 6 OPERATION AND MAINTENANCE REQUIREMENTS

6.0 APPLICABILITY

The Owner of any Regulated Development must submit an Operation and Maintenance (O&M) Plan, adhering to the requirements herein, to be implemented both during and after construction activity. A copy of the O&M Plan must be available for review upon the request of a City field inspector. The Owner is responsible for performing long-term maintenance of BMPs and in informing future owners of such responsibility. The BMPs discussed in Parts 3, 4 and 5 require O&M activities in order to prevent their short-term failure and to ensure their long-term performance. For stormwater BMPs not included herein, proper O&M procedures must be included.

6.1 SUBMITTAL REQUIREMENTS

All new O&M Plans shall be submitted to the DOB for review and approval. All O&M Plans must include the following information:

- Contact information for Owner and entity (or entities) charged with maintenance responsibility both during and after construction activity.
- Site map showing the locations of all BMPs that will be constructed at the development. The map must, at minimum, include the following information: (1) discharge points and outfall locations; (2) drainage patterns; (3) stormwater runoff flow direction; (4) expected maximum depths and limits of surface ponding; (5) structural controls used to control stormwater flows; and (6) locations of all selected BMPs on site.
- A summary statement that explains how rate control and volume control requirements are met for the project.
- Operations and maintenance practices – the specific activities required for the operations and maintenance of the BMPs. See Section 6.2 of this chapter.
- Implementation schedule – a schedule for conducting the O&M activities.
- Employee training – Procedures that will be used to train new employees regarding the O&M plan requirements.

Proposed modifications to the O&M Plan must be submitted to DOB for review and approval. The existing and proposed O&M Plans and a copy of the original DOB approval form are required for the modification and must be submitted simultaneously with the proposed amendments.

6.2 OPERATIONS AND MAINTENANCE PRACTICES

In addition to implementing the specific requirements of the O&M plan, the owner or responsible party shall also conduct the following practices:

O&M Plan	Minimum Design Requirements
	O&M Plan must be signed by the owner and notarized using the Operation and Maintenance Plan Owner's Certification Statement, Appendix II-A, Sheet A.108. A copy of the O&M plan must be provided to each new owner before the consummation of a sale, and the O&M Plan must be signed by the new owner, notarized, and submitted to the City to be kept on record.
	O&M Plan procedures and practices must be reviewed and assessed annually.
	Access routes including roadways and sidewalks shall be inspected annually and maintained as needed
	Drainage structures and flow restrictors must be inspected and cleaned semi-annually.
	Volume control BMPs shall be inspected semi-annually and after significant rainfall events exceeding 1.5 inches
	The Owner shall keep an updated log book documenting the performance of the required O&M activities for perpetuity. Log books must be produced upon the request of a City inspector.
	Vegetation shall be maintained on a regular basis.
	Pest control measures shall be implemented to address insects and rodents.
	Signage and fencing shall be installed and maintained where necessary to protect property and the public.
	Underground vaults must include design measures to facilitate cleaning and maintenance. Confined space safety procedures must be followed.

CHAPTER IV – PROHIBITION OF ILLICIT CONNECTIONS

PART 1 GENERAL

1.0 APPLICABILITY

Pursuant to the City's NPDES permit for storm water discharges, the construction, use, maintenance, or continued existence of illicit connections to any storm sewer system is prohibited. This prohibition expressly includes, without limitation, illicit connections made in the past, without regard to whether the connection was permissible under law or practices applicable or prevailing at the time of connection.

PART 2 DEFINITIONS

2.0 ILLICIT CONNECTION

An illicit connection is any drain or conveyance, whether on the surface or subsurface, that allows an illegal discharge to enter a storm sewer system. Illicit connections include, but are not limited to, any conveyances that allow any non-storm-water discharge, including sewage, process wastewater, or wash water, to enter a storm sewer system or any connections to a storm sewer system from indoor drains and sinks, without regard to whether said drain or connection had been previously allowed, permitted, or approved by a government agency. Illicit connections include, without limitation, any drain or conveyance connected from a commercial or industrial land use to a storm sewer system that has not been documented in plans, maps, or equivalent records and approved by the City.

2.1 ILLEGAL DISCHARGE

Unless otherwise approved by a NPDES permit, an illegal discharge is any direct or indirect non-storm-water discharge to a storm sewer system that is not water line flushing, fire hydrant flushing, landscape irrigation water, rising ground water, ground water infiltration, pumped ground water, discharge from a potable water source, foundation drains, air conditioning

condensate, irrigation water, (except for wastewater irrigation), springs, water from crawl space pumps, footing drains, storm sewer cleaning water, water from individual residential car washing, routine external building washdown that does not use detergents, flows from riparian habitats and wetlands, dechlorinated pH neutral swimming pool discharges, residual street wash water, discharges or flows from fire fighting activities, dechlorinated water reservoir discharges, and pavement washwaters where spills or leaks of toxic or hazardous materials have not occurred (unless all spilled material has been removed). Any discharge other than those permitted under these regulations is deemed to be a discharge of waste.

PART 3 REQUIREMENTS

3.0 REQUIREMENT TO ELIMINATE OR SECURE APPROVAL FOR ILLICIT CONNECTIONS

The DWM may require, by written notice, that a person responsible for an illicit connection to a storm sewer system comply with the requirements of this Article to eliminate or secure approval for the connection by a specified date, without regard to whether the connection or discharges to it had been established or approved prior to the effective date of these Regulations. If, subsequent to eliminating a connection found to be in violation of these Regulations, the responsible person can demonstrate to DWM that an illegal discharge will no longer occur, said person may request City approval to reconnect. The reconnection or reinstallation of the connection shall be at the responsible person's expense.

3.1 REQUIREMENT TO ELIMINATE ILLEGAL DISCHARGES

The DWM may require, by written notice, that a person who is responsible for an illegal discharge, immediately, or by a specified date, discontinue the discharge and, as necessary, take measures to eliminate the source of the discharge to prevent the occurrence of future illegal discharges.

APPENDIX I Stormwater Ordinance

MUNICIPAL CODE OF CHICAGO

CHAPTER 11-18
STORMWATER MANAGEMENT

11-18-010 Title and purpose.

This chapter shall be known and may be cited as the "Chicago Stormwater Management Ordinance". It is hereby declared to be the policy of the City to promote programs that minimize the negative stormwater impacts of new development and redevelopment.
(Added Coun. J. 12-13-06, p. 95586, § 1)

11-18-020 Definitions.

For the purposes of this chapter, unless the context requires otherwise, the following terms, regardless of whether or not they are capitalized, shall have the definitions set forth below:

Applicant. A person applying for a Stormwater Management Plan approval or an amendment thereto or variance therefrom. An Applicant must be the Owner or Developer of the Regulated Development specified in the Plan.

Average Dry-Weather Flow. Non-stormwater flow that consists of either (a) sanitary flow as quantified in 35 Ill. Admin. Code, Subtitle C, Chapter II, Part 370, Appendix B ("Table Number 2 – Commonly Used Quantities of Sewage Flows From Miscellaneous Type Facilities"), as amended, or (b) industrial process water flow as quantified by determining the cubic feet per second released during the average of seven consecutive 24-hour periods.

Best Management Practice (BMP). A measure approved by the commissioner and used to control the adverse stormwater-related effects of development.

Building commissioner. The commissioner of buildings or his designee.

Commissioner. The commissioner of water management or his designee.

Developer. Any person who manages, organizes, oversees, plans or supervises the creation of a Regulated Development.

Drainage Area. Any location from which or through which stormwater moves to a drainage system.

Existing Conditions. The condition of a site in the ten years prior to the date of a Plan submission, as shown on historical aerial photographs or other verifiable documentation. If a site has been demolished and/or cleared within such ten-year period, its conditions prior to such demolition and/or clearing may be used as a basis for existing conditions.

Impervious Surface. A surface which substantially precludes the infiltration of water, such as concrete, asphalt, tile or compacted gravel.

Infiltration. The passage, movement or percolation of water into and through soil surfaces, including soil surfaces on roofs and in landscaped areas.

Owner. The owner, manager, agent or other person in charge, possession or control of a Regulated Development or any part thereof.

Plan. The Stormwater Management Plan required by this chapter.

Regulated Development or *Development.* Any construction activity, excavation or grading, commencing on or after January 1, 2008, that:

(a) disturbs a land area or substantially contiguous land areas of 15,000 or more square feet in the aggregate. Land areas separated by public right-of- way at the conclusion of development shall not be deemed “substantially contiguous” to each other for purposes of this definition. For purposes of calculating square footage pursuant to this

paragraph (a), “land area” shall include twenty-five percent of the square footage of the sidewalls of a building that directly connects to the sewer system via side gutters, and shall also include any average dry-weather flow based on a conversion rate of 1.0 cfs (cubic feet per second) into one acre (43,560 square feet), or

(b) creates an at-grade impervious surface of 7,500 or more substantially contiguous square feet, or

(c) results in any discharges of stormwater into any waters or separate sewer system.

For purposes of this definition, square footage shall be calculated based upon the project as a whole, regardless of whether construction proceeds in phases. A Regulated Development shall not include projects located entirely within the public right-of-way at the conclusion of development. With respect to a project located both on the public right-of-way and on private property at the conclusion of development, that portion of the project located on the public right-of-way will not be included in calculating the square footage thresholds of subparagraphs (a) and (b) of this definition. If a project includes Residential Development, the Residential Development will not be included in calculating the square footage thresholds of subparagraphs (a) and (b) of this definition.

Residential Development. A Regulated Development, or portion thereof, which upon completion will result in the subdivision of land into detached single-family or two-family dwellings.

Runoff. The water derived from precipitation falling onto a Regulated Development which is in excess of the infiltration capacity of the soils of that Development, which flows over the surface of the ground or is collected in any watercourse.

Stormwater. Water derived from any form of precipitation.

Stormwater Drainage System. Any and all natural and artificial means used in combination to conduct stormwater to, through, or from a Drainage Area to the point of infiltration or final outlet from a Regulated Development. A Stormwater Drainage System includes, but is not limited to, any of the following: conduits and appurtenance features, canals,

channels, ditches, streams, culverts, streets, storm sewers, detention basins, swales, vegetated areas and pumping stations.

Stormwater Management Plan. A detailed formulation of a program of action which describes a proposed or existing Stormwater Drainage System and environmental features applicable to a Regulated Development. The Plan shall include programs for grading and drainage, operations and maintenance, and soil, sediment and erosion control. These programs shall consist of written documentation, scaled maps and drawings with supporting engineering calculations.

Watercourse. Any channel, natural or artificial, lined or unlined, through which water flows or may flow.

Waters. All watercourses and all lakes, ponds, wetlands and other bodies of water, whether natural or artificial, that are located wholly or partly within or adjoining the territorial boundaries of the City.
(Added Coun. J. 12-13-06, p. 95586, § 1; Amend Coun. J. 11-8-12, p. 38872, § 208)

11-18-030 Stormwater management plan – Required.

Every Regulated Development shall at all times have in place a Plan approved by the City. In addition to such other requirements as the commissioner may set forth by regulation, the Plan shall include the following:

(a) Provisions for Stormwater Management:

(1) *Rate Control.* Stormwater Drainage Systems shall manage the peak rate of discharge from the Regulated Development, incorporating the maximum permissible release rate. Provided, however, that Developments that create an at-grade impervious surface of less than 7,500 substantially contiguous square feet and that directly discharge to waters shall not be subject to the rate control requirements of this subparagraph (a)(1).

(2) *Volume Control.* Stormwater drainage systems shall reduce the volume of runoff from a Regulated Development by one of the following measures:

(A) capture one-half inch of runoff from all impervious surfaces in accordance with volume control BMPs; or

(B) for Developments that do not directly discharge to waters or to a municipal separate storm sewer system, achieve a fifteen percent reduction in impervious surfaces from existing conditions.

(b) Provisions for sediment and erosion control.

(c) Provisions for operations and maintenance.

(Added Coun. J. 12-13-06, p. 95586, § 1)

11-18-040 Stormwater management plan – Exceptions.

(a) A Plan shall not be required for Residential Development.

(b) The volume control requirements of a Plan shall not apply to the following:

(1) Developments that do not directly discharge to waters or to a municipal separate storm sewer system and that will upon completion of development have less than fifteen percent impervious surfaces.

(2) Developments consisting of surfaces at an airport that are intended for aircraft operation.

(3) Developments taking place at any facility that is operating under a permit issued pursuant to the National Pollution Discharge Elimination System, 40 C.F.R. Part 122, as amended, for industrial or municipal discharges.

(Added Coun. J. 12-13-06, p. 95586, § 1)

11-18-050 Stormwater management plan – Submission, approval and compliance.

(a) The submission of the Plan required by this chapter shall be made by the Applicant to the building commissioner in such form(s) and format(s) as the commissioner may require. As part of the Plan submission, the Applicant shall provide such information regarding the site and its proposed uses as the application may require. The Plan submission shall be submitted as part of the sewer permit review process required by

Chapter 11-16 of the Code. The building commissioner shall be the custodian of all such submissions.

(b) The Plan shall be valid only upon approval by the building commissioner.

(c) Before a Plan may be approved, the Applicant must certify to the building commissioner that the Applicant has met or will meet, in addition to the requirements of this chapter, all other city, county, state, and federal requirements related to floodplains, wetlands and water quality.

(d) Following Plan approval and completion of construction, the Owner shall provide to the building commissioner, in such time frame as established by regulation, as-built drawings of the Development in such form(s) and format(s) as the commissioner of water management may require. Consistent with applicable law, the building commissioner shall treat such as-built drawings as confidential trade secrets, and shall provide the Owner with a copy of any appeal, received by the building commissioner, of the building commissioner's notice of denial provided to a third party seeking inspection and copies of such drawings.

(Added Coun. J. 12-13-06, p. 95586, § 1; Amend Coun. J. 11-8-12, p. 38872, § 209)

11-18-060 Stormwater management plan – Amendment.

A Regulated Development shall be developed, operated and maintained in compliance with its approved Plan until such time as the City approves an amendment or other modification of the Plan for that Regulated Development. The submission of a request for amendment shall be made to the building commissioner in such form(s) and format(s) as the commissioner of water management may require. The building commissioner shall review any request for amendment and shall notify the Applicant of the result of such review. An amendment may only be granted if the building commissioner determines that the amendment will not have a detrimental effect on the Plan.

(Added Coun. J. 12-13-06, p. 95586, § 1; Amend Coun. J. 11-8-12, p. 38872, § 210)

11-18-070 Change of ownership.

(a) Upon a change of ownership of a Regulated Development, each new Owner of the Regulated Development or any part thereof shall comply with the Plan approved for that

Regulated Development until such time as the building commissioner approves an amendment or other modification of the Plan for that Development.

(b) A change of ownership of a Regulated Development shall not be considered to be an amendment. However, the Owner of a Regulated Development for which a Plan is required or has been approved shall notify each new Owner of the applicability of the Plan to the Regulated Development, and provide each new Owner with a copy of the Plan, before consummation of the sale of the Development. A violation of this subsection (b) shall be punishable by a fine of $500.00.

(Added Coun. J. 12-13-06, p. 95586, § 1; Amend Coun. J. 11-8-12, p. 38872, § 211)

11-18-080 Stormwater management plan – Fees.

A non-refundable fee for review of a Plan submission or variance request shall be remitted to the building commissioner as part of the Plan submission or variance request. The fee for review of a Plan submission, or variance request based upon Section 11-18-090(b)(2), (3) or (4), shall be as follows:

(a) For Regulated Developments affecting less than 50,000 square feet – $1,000.00.

(b) For Regulated Developments affecting 50,000 or more square feet – $3,000.00.

The fee for review of a variance request based upon Section 11-18-090(b)(1) shall be 50% greater than the amounts specified in (a) and (b) above.

(c) For amendments to a Plan submitted within one year of Plan approval, the fee shall be $350.00 per submission. For amendments submitted over one year after Plan approval, the fee shall be $500.00 per submission.

(Added Coun. J. 12-13-06, p. 95586, § 1; Amend Coun. J. 11-8-12, p. 38872, § 212)

11-18-090 Variance.

(a) Upon written petition of the Applicant demonstrating that exceptional circumstances exist, the commissioner may grant a variance, in whole or in part, from the requirements of Section 11-18-030. To the extent that the Applicant can comply with Section 11-18-030, the Applicant must do so.

(b) Exceptional circumstances justifying the application of this section shall exist only where the Applicant can clearly demonstrate, to the satisfaction of the commissioner, that one of the following four circumstances exists:

(1) The Applicant cannot comply with Section 11-18-030 because of the site's exceptional physical conditions or circumstances. To demonstrate that such conditions or circumstances exist, the Applicant must provide supporting documentation. At a minimum, the Applicant must show that the site is designed to minimize the peak rate of discharge and volume of stormwater from the Development. Such showing must include a BMP feasibility evaluation for each building, parking area, landscaped area and each other significant footprint at the site. The evaluation must include all necessary technical computations and analyses (examples include engineering, architectural and horticultural analyses) to assess fully the applicability of pertinent BMPs and the extent to which they can be applied to comply with Section 11-18-030.

(2) The Applicant cannot comply with Section 11-18-030 without causing a public nuisance.

(3) The Applicant cannot comply with Section 11-18-030 without violating the Building Code or the Fire Code, as those terms are defined in Section 1-4-090 of the code, or a state or federal law.

(4) The Regulated Development is a registered landmark and compliance with Section 11-18-030 would violate the Regulated Development's landmark status.

(c) Applications for a variance shall be in a form prescribed by the commissioner. All applications for a variance shall bear the notarized signature and certification of a professional architect, engineer or geologist licensed in the State of Illinois.

(d) In applying for a variance, an Applicant may propose, and the commissioner may consider, alternative measures to accomplish the stormwater management goals of this chapter.

(Added Coun. J. 12-13-06, p. 95586, § 1)

11-18-100 Site inspections.

To enable the commissioner, or his designee, to monitor compliance with this chapter, the Owner shall permit access during reasonable hours to those areas of a Regulated Development affected by the Plan.

(Added Coun. J. 12-13-06, p. 95586, § 1; Amend Coun. J. 11-16-11, p. 13798, Art. II, § 6)

11-18-110 Regulations.

The commissioner is authorized to promulgate regulations to effectuate the purposes of this chapter. Any regulations so promulgated shall be considered as an integral part of the Chicago Stormwater Management Ordinance and shall be enforceable, and their violation subject to the same penalties, as set forth in this chapter.

(Added Coun. J. 12-13-06, p. 95586, § 1)

11-18-120 Chapter requirements not exclusive.

The requirements of this chapter shall be in addition to, and shall not relieve any person from compliance with, all other applicable provisions of the code.

(Added Coun. J. 12-13-06, p. 95586, § 1)

11-18-130 Enforcement and penalties.

(a) Except as otherwise specifically provided in this chapter, the commissioner, and his respective designee, are authorized to enforce this chapter and any regulations promulgated hereunder, including the issuance of citations for violations.

(b) Owners, developers and any other persons who violate any provision of this chapter shall be jointly and severally liable for each such violation.

(c) The failure to obtain a plan approval if required by this chapter shall subject the violator to a civil penalty of $5,000.00 to $10,000.00. Except as otherwise specifically

provided, other violations of this chapter shall be punishable by a civil penalty of $100.00 to $1,000.00 for each such violation. In addition to any penalties imposed for violations of this chapter, violations of any Plan requirement or condition shall be punishable by a penalty of not less than $100.00 and not more than $1,000.00 for each such violation. Each day a violation continues shall be considered to be a separate violation. In addition to the civil penalties specified herein, the City may recover as an additional civil penalty its attorneys' fees and three times the amount of all costs and expenses incurred by the City in abating or remediating a violation of this chapter.

(d) In addition to any other remedies, penalties or means of enforcement provided in this chapter, if the commissioner, on due investigation, makes a determination of noncompliance, he may request the corporation counsel to make application on behalf of the City to the Circuit Court of Cook County for such other order as the Court may deem necessary or appropriate to secure compliance. The corporation counsel may then institute proceedings on behalf of the City, as provided by law.

(Added Coun. J. 12-13-06, p. 95586, § 1; Amend Coun. J. 11-16-11, p. 13798, Art. II, § 6)

11-18-140 Cease and desist orders.

(a) The commissioner may issue a cease and desist order to stop any person from proceeding with any activity regulated under this chapter when the commissioner has reason to believe that such activity is in violation of this chapter, or that the activity endangers human or animal health, endangers the environment, or has the potential to cause or worsen flooding or wasteful use of water. The commissioner may enforce a cease and desist order pursuant to this section or pursuant to section 11-18-130(d).

(b) Prior to imposing the penalty specified by this section, the commissioner(s) issuing the cease and desist order shall serve the respondent with a copy of the order, stating the nature and location of the violation, the date by which the respondent must cease and desist the illicit activity, the amount of the applicable penalty for noncompliance, the respondent's right to request an administrative hearing to contest the merits of the order, and the time and manner in which a hearing may be requested. Service of the cease and desist order shall be in the manner set forth in Section 2-14-074 of this code.

(c) (1) Within 10 days of service of the cease and desist order, the respondent may submit to the commissioner(s) a written request for a hearing to be conducted by the City's department of administrative hearings. Upon receipt of a timely request for a hearing, either or both of the commissioners shall institute an enforcement action with the department of administrative hearings. Notice of the administrative hearing shall be given to the respondent in the manner set forth in Section 2-14-074 of this code.

(2) In the event the respondent fails to comply with a cease and desist order or fails to request a hearing within the 10-day period provided in subsection (c)(1) of this section, the commissioner(s) issuing the order may institute an action to enforce the order with the department of administrative hearings. Notice of the administrative hearing shall be given to the respondent in the manner set forth in Section 2-14-074 of this code.

(d) Upon the initiation of an enforcement action pursuant to subsection (c) of this section, the department of administrative hearings shall appoint an administrative law officer who shall conduct the hearing within 30 days of receiving; the request. Chapter 2-14 of the code shall apply to any hearing conducted pursuant to this section. The cease and desist order shall remain in effect until the department of administrative hearings has taken final action on the matter. In addition to imposing fines and penalties consistent with this section, the administrative hearing officer shall have the authority to affirm, vacate or modify the cease and desist order.

(e) The penalty specified by this section shall be imposed either upon expiration of the time period in which the respondent may seek review by the department of administrative hearings, or upon the administrative law officer's finding adverse to the respondent, as applicable.

(f) Violations of an order issued under this section shall be punishable by a penalty of $10,000.00. Each day that the violation continues beyond the specified cessation date shall be deemed a separate offense.

(Added Coun. J. 12-13-06, p. 95586, § 1; Amend Coun. J. 11-16-11, p. 13798, Art. II, § 6)

APPENDIX II-A Standard Details

A.1	Typical Drain Connections for Existing Drains (RCP Sewer Main)
	Typical Drain Stacks for Future Use (RCP Sewer Main)
	Typical Drain Connections for Existing Drains (VCP Sewer Main)
	Typical Drain Stacks for Future Use (VCP Sewer Main)
	Lifting Hole Plug Detail for Concrete Pipe
	Detail of Tapered Hole
	Sewer Trench Detail
A.2	Typical Drain Connections for Existing Drains (DIP)
	Typical Drain Stacks for Future Use (DIP)
	DIP Drain Connections for Monolithic Concrete Sewers
	DIP Drain Connections for Reinforced Concrete Pipe Sewers
	Brick Sewer Drain Connections
A.3	Heavyweight Manhole Frame
	Lightweight Manhole Frame
	Standard CB/MH Lid
	ADA Manhole Lid
	Standard Lid for Infiltration Systems
	Infiltration Solid Lid for Catch Basin
	Detail of Frame Adjustment
	Solid Lid for Manholes
A.4	Flat Top Slab Details
A.5	Type “A” Manhole Precast Bases and Rings
A.6	Reinforcement for Type “A” Precast Manhole Bases
A.7	Reinforcement Bar List for Type “A” Precast Manhole Bases
A.8	Type “A” Precast Manhole for Sewers 21" Diameter and Smaller
A.9	Type “B” Manhole
A.10	Reinforcement for Type “B” Manhole Bases
A.11	Type “B” Manhole Configurations
A.12	Modified Type “B” Manhole
A.13	Type “C” Single Drop Manhole
A.14	Type “C” Double Drop Manhole
A.15	Bases for Type “C” Drop Manhole
A.16	Precast Tumbling Basin
A.17	Concrete Collar/Connection Details
A.18	Standard Drainage Structures for Public Streets—CB and Inlet Details
	Standard Drainage Structures for Public Alleys
	Drainage Structures Restrictors
A.19	Drainage Structures for Private Development—CBs & Restrictors
	Underdrain detail
A.20	Ladder Rungs
A.21	Abandoned Sewer Structure Details

A.100.1	Traps – Interceptors – Separators – Basins
A.100.2	UPC Grease Interceptor Sizing Worksheet
A.100.3	Grease Interceptor Sizing Worksheet
A.100.4	Grease Separators—Sizing for Commercial Sinks
A.100.5	(continued)
A.100.6	Grease Basin Standard
A.100.7	Large Capacity Grease Interceptor
A.101	Grease Separator
A.102	Precast Grease Basin
A.102.1	Sand/Oil Interceptor Sizing Worksheet
A.102.2	Oil/Grease Trap/Interceptor
A.102.3	Lint Interceptor Sizing Calculator for Gravity Drain Laundry Machines
A.102.4	Lint Basin Standard
A.102.5	Lint Basin Standard
A.102.6	Precast Grease/Lint Basin
A.103	Precast Lint Basin
A.103.1	Triple Garage Basin
A.104	Triple Garage Basin
A.105	Drainlayer's License Classifications
A.106	Typical Cleanout to Finished Floor
A.107	Storm Outfall Sign on Waterways
A.108	Operations and Maintenance Plan Owner’s Certification Statement
A.109	Right of Way As-Builts - Record Drawings Form

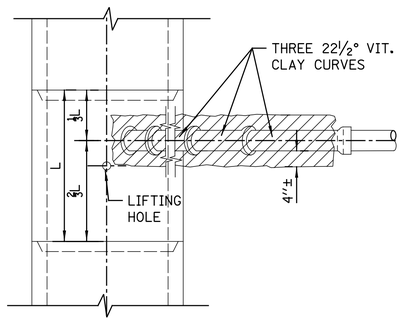

PLAN

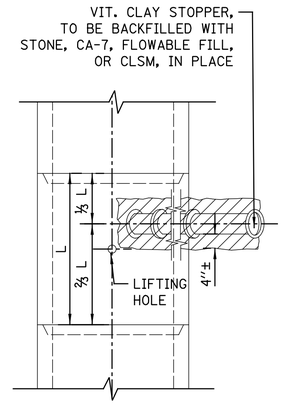

PLAN

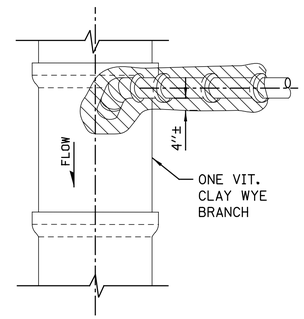

PLAN

NOTE:
PLUG TO BE COATED WITH MORTAR AND DRIVEN INTO PLACE WITH A WOODEN MALLET AND THEN SEALED WITH MORTAR.

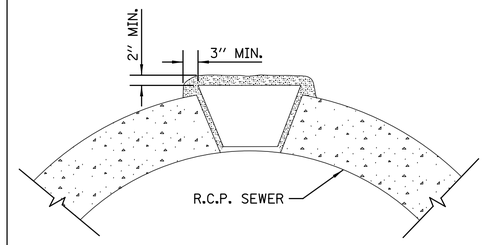

LIFTING HOLE PLUG DETAIL FOR CONCRETE PIPE

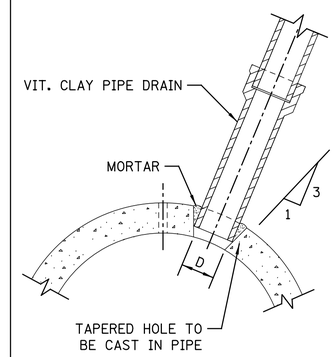

SIZE OF DRAIN	"D"
6"	6⅞"
8"	9⅛"
10"	11⅛"
12"	13½"
15"	17"
18"	20¼"
21"	23⅞"

DETAIL OF TAPERED HOLE

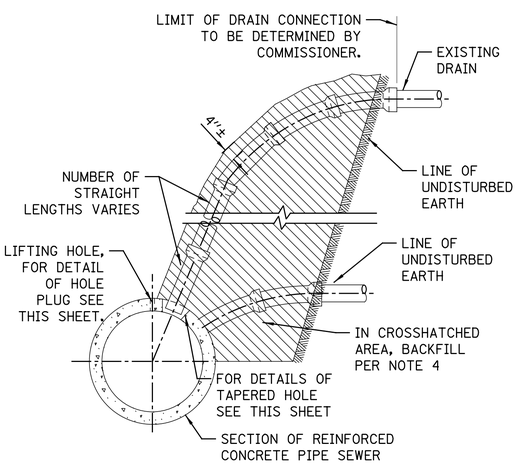

ELEVATION

TYPICAL DRAIN CONNECTIONS FOR EXISTING DRAINS

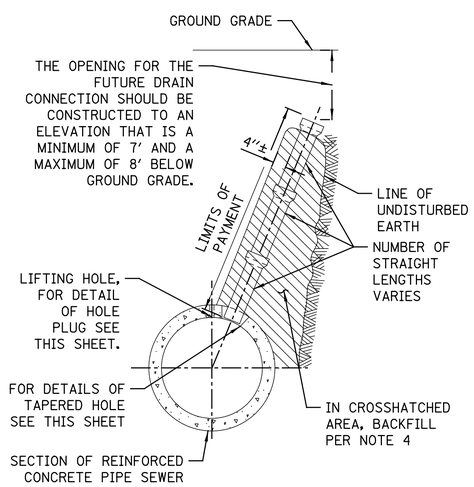

ELEVATION

TYPICAL DRAIN STACKS FOR FUTURE USE

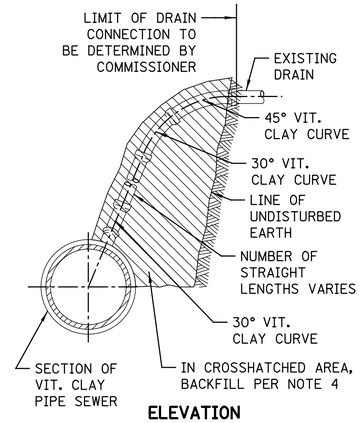

ELEVATION

TYPICAL DRAIN CONNECTIONS FOR EXISTING DRAINS

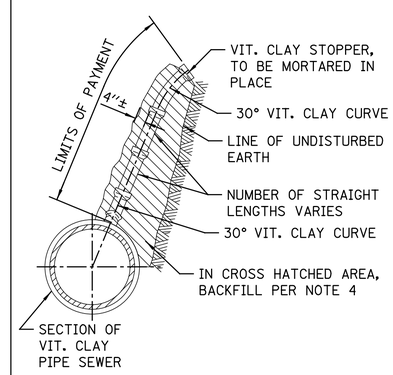

ELEVATION

TYPICAL DRAIN STACKS FOR FUTURE USE

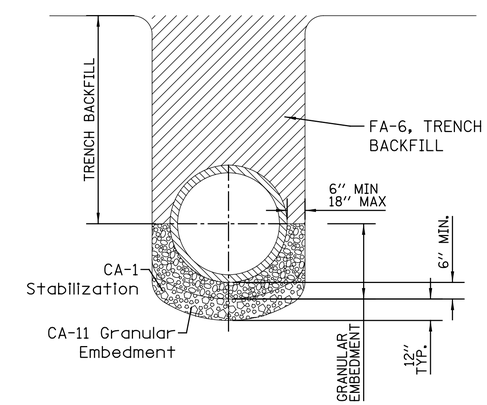

NOTE:
1. FOR TRENCH BACKFILL, USE FA-6 SAND, CRUSHED CONCRETE SAND OR STONE SAND.

2. FOR GRANULAR EMBEDMENT, USE CA-11, CRUSHED GRAVEL, CRUSHED STONE, OR CRUSHED CONCRETE.

3. 12" OF CA-1 STONE IS ONLY REQUIRED WHEN UNSTABLE MATERIAL IS ENCOUNTERED AT TRENCH BOTTOM.

SEWER TRENCH DETAIL

NOTES:

1. ALL DRAIN CONNECTION JOINTS MUST BE MADE AS SPECIFIED IN SPECIFICATIONS..
2. FOR DUCTILE IRON PIPE DRAIN CONNECTIONS SEE SHEET NO. A.2.
3. FOR ALL GRANULAR EMBANKMENT, USE CA-7 OR CA-11
4. FOR BACKFILL OF HATCHED SUPPORT AREAS, USE CONCRETE. CA-11, FLOWABLE FILL, OR CLSM.

STANDARD REVISIONS	
DATE	DESCRIPTION
2/24/15	APPROVED PLAN

PERCENT COMPLETE	DATE
30	
60	
75	
90	
100	
BULLETIN	

CITY OF CHICAGO
DEPARTMENT OF WATER MANAGEMENT
BUREAU OF ENGINEERING SERVICES

VITRIFIED CLAY PIPE DRAIN CONNECTIONS

DRAWN: SBW
DESIGNED:
CHECKED: GD, GC, SO
REVIEWED:

A.1

___ OF ___

PN _____

$FILE$
$DATE$

CDWM_Details.cel 8/5/2015 10:14:12 AM

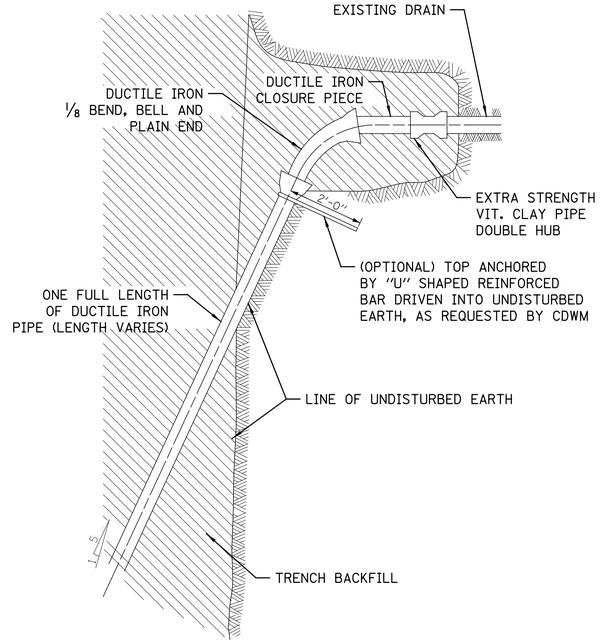

TYPICAL DRAIN CONNECTIONS FOR EXISTING DRAINS

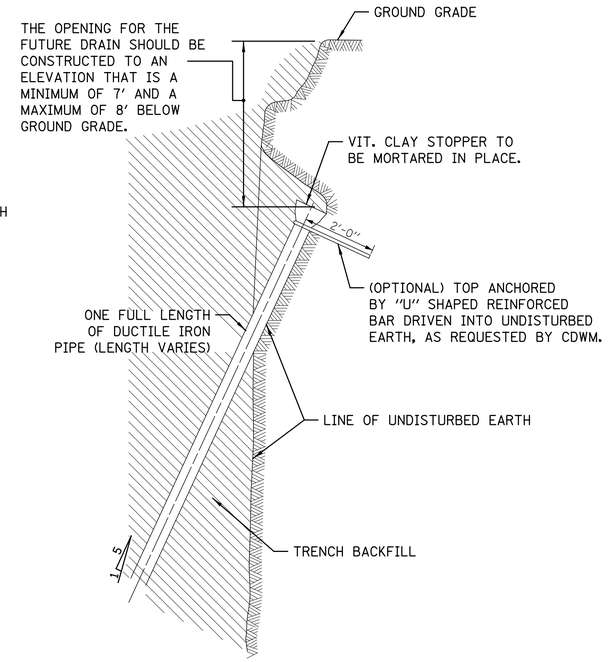

TYPICAL DRAIN STACKS FOR FUTURE USE

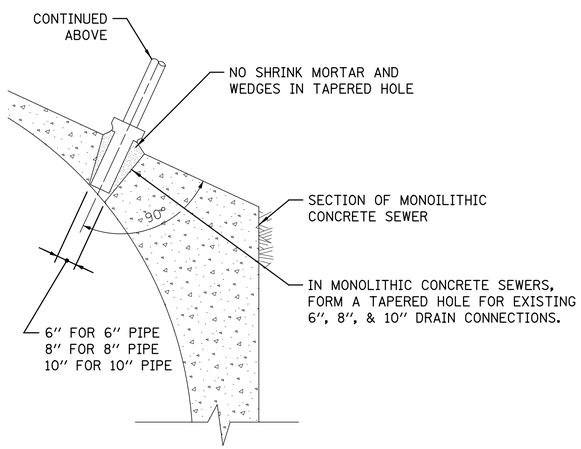

FOR MONOLITHIC CONCRETE SEWERS

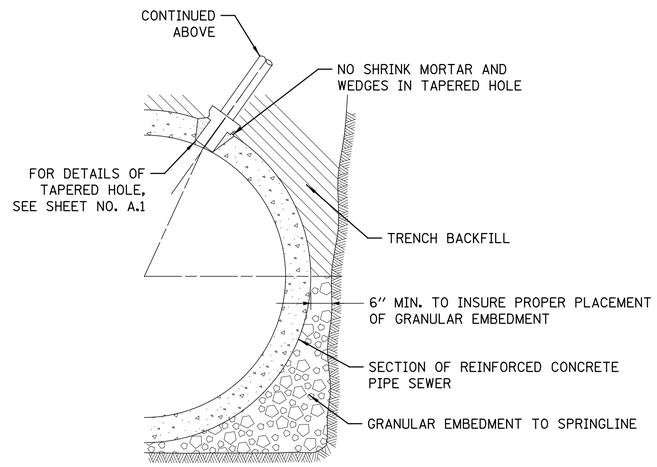

FOR REINFORCED CONCRETE PIPE SEWERS

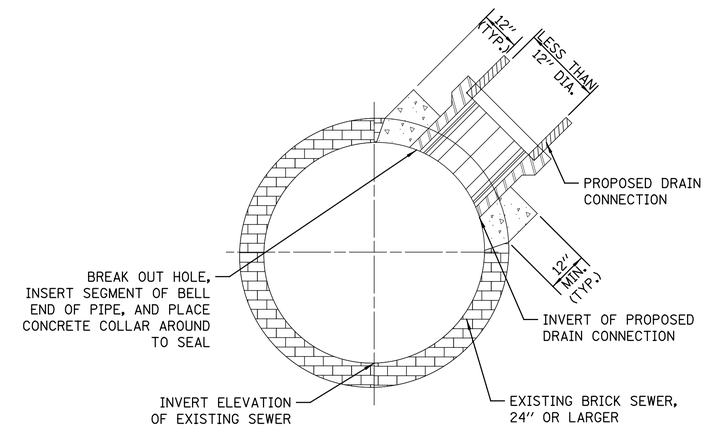

(NOT TO SCALE)

FOR BRICK SEWERS

DUCTILE IRON PIPE DRAIN CONNECTIONS

BRICK SEWER DRAIN CONNECTIONS

NOTES:
1. DUCTILE IRON PIPE MUST BE BELL END WITH PUSH-ON JOINTS CONFORMING TO ANSI SPECIFICATIONS A21.51 WITH CLASS 52 THICKNESS.
2. CONNECTIONS AND STACKS SHOWN MUST BE USED FOR 6", 8", & 10" DRAINS ONLY.
3. FOR VITRIFIED CLAY PIPE DRAIN CONNECTION AND DRAIN STACK CONSTRUCTION, SEE SHEET NO. A.1.
4. FOR TRENCH BACKFILL, USE FA-6 SAND, CRUSHED CONCRETE SAND, OR STONE SAND.
5. FOR GRANULAR EMBEDMENT, USE CA-11, CRUSHED GRAVEL, CRUSHED STONE, OR CRUSHED CONCRETE.

STANDARD REVISIONS	
DATE	DESCRIPTION
1/5/15	APPROVED PLAN

PERCENT COMPLETE	DATE
30	
60	
75	
90	
100	
BULLETIN	

CITY OF CHICAGO
DEPARTMENT OF WATER MANAGEMENT
BUREAU OF ENGINEERING SERVICES

DUCTILE IRON PIPE
DRAIN CONNECTIONS

DRAWN: SBW
DESIGNED:
CHECKED:
REVIEWED:

A.2

___ OF ___

PN _____

$FILE$
$DATE$

CDWM_Details.cel 8/5/2015 10:29:58 AM

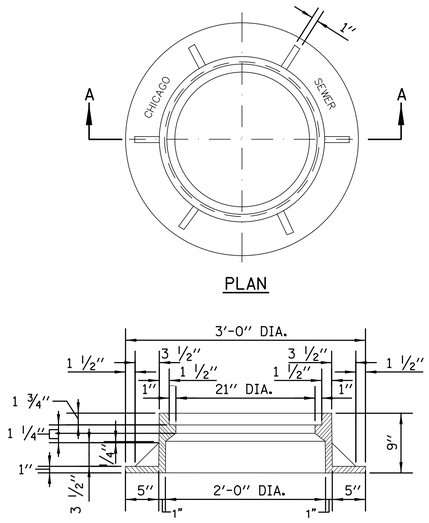

NOTE: METAL PLATES MUST BE FURNISHED FOR PERFORATED LIDS ON MANHOLES.

HEAVYWEIGHT MANHOLE FRAME

MATERIAL: CAST IRON

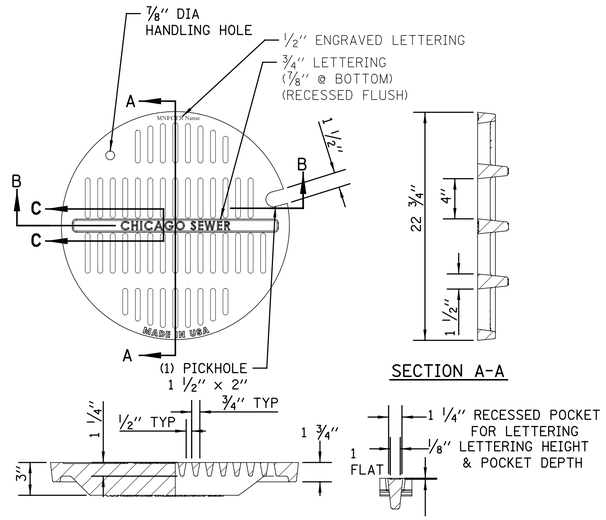

MATERIALS
GRATE-GRAY IRON
ASTM A48 CL35B

DESIGN LOAD
HEAVY DUTY

COATING
UNDIPPED

OPEN AREA
85.6 SQ. IN.

STANDARD CB/MH LID

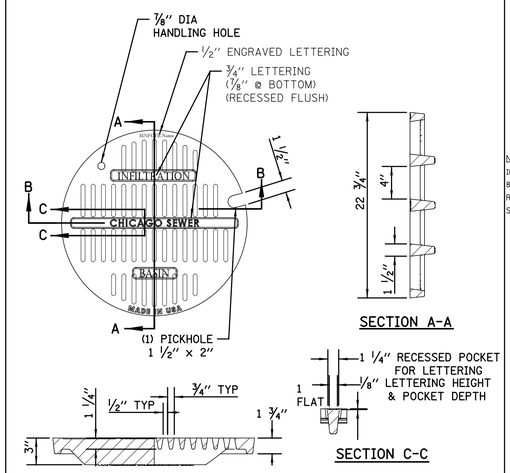

MATERIALS
GRATE-GRAY IRON
ASTM A48 CL35B

DESIGN LOAD
HEAVY DUTY

COATING
UNDIPPED

OPEN AREA
85.6 SQ. IN.

STANDARD LID FOR INFILTRATION SYSTEMS

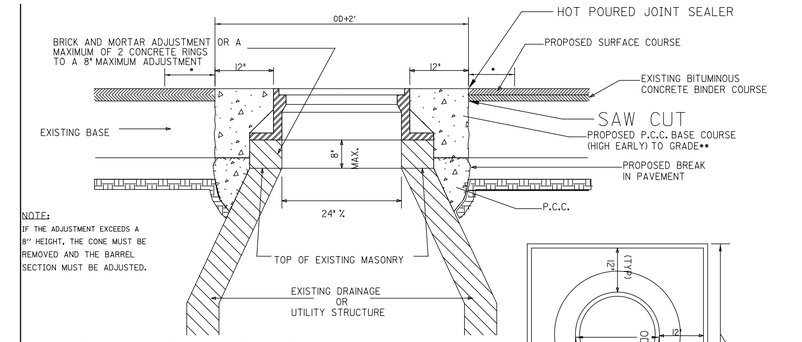

NOTE:
IF THE ADJUSTMENT EXCEEDS A 8" HEIGHT, THE CONE MUST BE REMOVED AND THE BARREL SECTION MUST BE ADJUSTED.

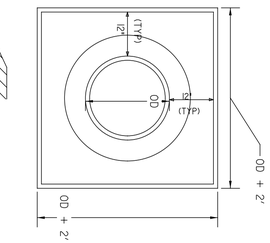

PLAN VIEW (BASE TO GRADE)

*REFER TO CDOT FOR ASPHALT RESTORATION REQUIREMENTS & CRACK SEALING.

** ON NON-MORATORIUM STREETS, FULL-DEPTH PCC BASE COURSE MAY BE UTILIZED. ON MORATORIUM STREETS, PAVEMENT RESTORATION SHALL ADHERE T CDOT REQUIREMENTS.

NOTES:

IF THE ADJUSTMENT EXCEEDS AN 8" HEIGHT, THE CONE MUST BE REMOVED AND THE BARREL SECTION MUST BE ADJUSTED.

THE CONTRACTOR IS REQUIRED TO REPLACE ANY BROKEN FRAMES AND LIDS OF SEWER STRUCTURES WITH STANDARD FRAMES AND LIDS OF THE DWM. IN ADJUSTMENT OR RECONSTRUCTION OF SEWER STRUCTURES, ANY NON-STANDARD FRAMES AND LIDS MUST BE REPLACED WITH STANDARD FRAMES AND LIDS. IN ADJUSTMENT OR RECONSTRUCTION OF INLETS, ANY NON-STANDARD INLETS (GUTTER BOXES) MUST BE REPLACED WITH DWM STANDARD INLETS.

THE FRAMES AND LIDS OF SEWER STRUCTURES TO BE ABANDONED, REMOVED, OR FILLED MUST BE SALVAGED AND THE DWM NOTIFIED FOR PICK UP.

MANHOLES, CATCH BASINS AND INLETS MUST BE PROTECTED FROM THE ENTRY OF ASPHALT/DEBRIS INTO THE SEWER SYSTEM DURING CONSTRUCTION. THE CONTRACTOR MUST MARK LOCATIONS OF ALL SEWER STRUCTURES ON THE SIDEWALK BEFORE STARTING PAVEMENT REMOVAL/REPLACEMENT. ADJUSTMENT OF FRAMES AND LIDS OF SEWER STRUCTURES MUST BE COMPLETED PRIOR TO STREET RESURFACING.

DETAIL OF FRAME ADJUSTMENT

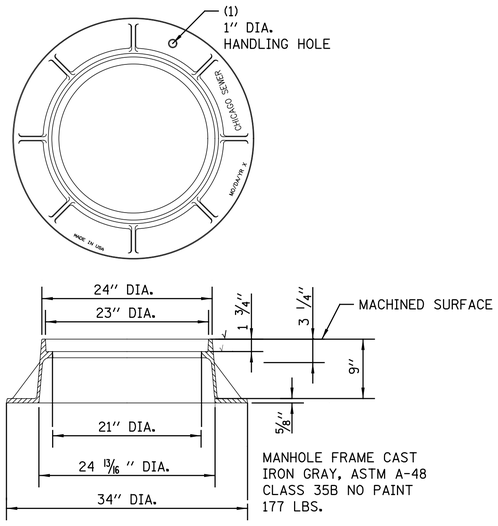

LIGHTWEIGHT MANHOLE FRAME

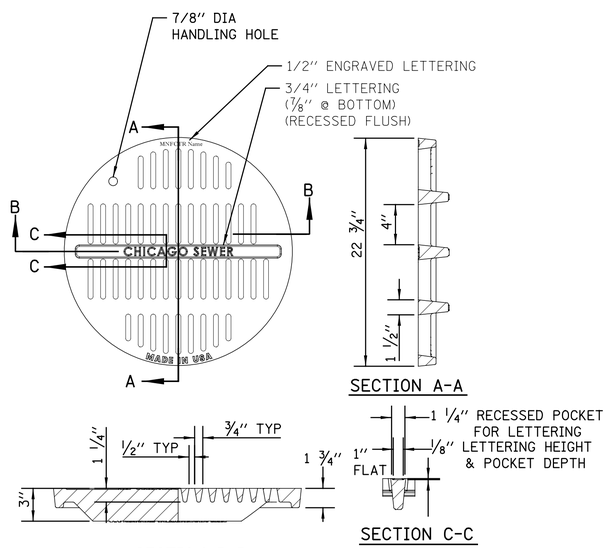

MATERIALS
GRATE-GRAY IRON
ASTM A48 CL35B

DESIGN LOAD
HEAVY DUTY

COATING
UNDIPPED

OPEN AREA
85.6 SQ. IN.

ADA MANHOLE LID

NOTE:
NOT TO BE USED WITHOUT PRIOR APPROVAL OF CDWM

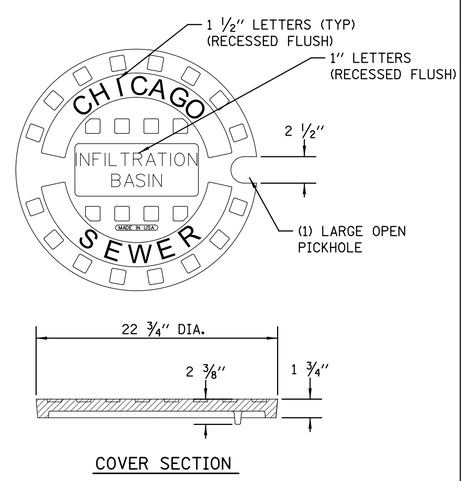

INFILTRATION SOLID LID FOR CATCH BASIN

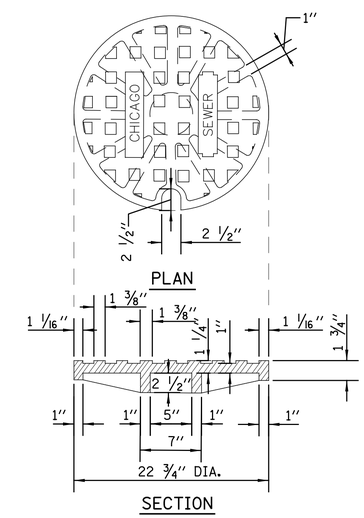

SOLID LID FOR MANHOLES

STANDARD REVISIONS	
DATE	DESCRIPTION
1/5/15	Approved

PERCENT COMPLETE	DATE
30	
60	
75	
90	
100	
BULLETIN	

CITY OF CHICAGO
DEPARTMENT OF WATER MANAGEMENT
BUREAU OF ENGINEERING SERVICES

MANHOLE
LIDS AND FRAMES

DRAWN: SBM
DESIGNED:
CHECKED: GD, GC, SO
REVIEWED:

A.3

___ OF ___

PN _____

$FILE$
$DATE$

CDWM_Details.cel 8/5/2015 10:30:20 AM

SPECIAL DRAINAGE STRUCTURES
FOR PUBLIC STREETS AND ALLEYS

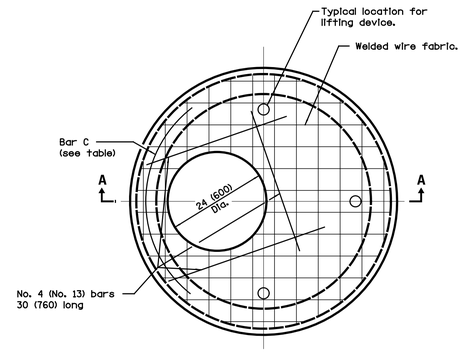

PLAN
(WELDED WIRE FABRIC)

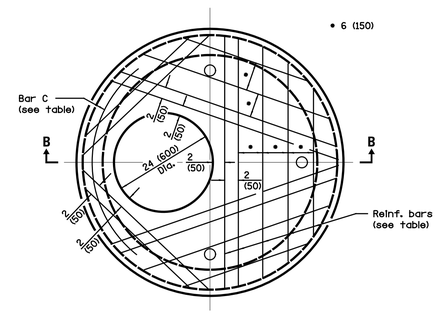

PLAN
(REINFORCEMENT BARS)

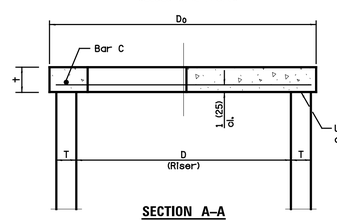

SECTION A–A

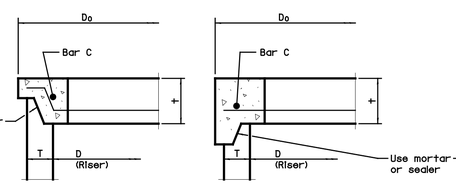

ALTERNATE JOINT CONFIGURATIONS

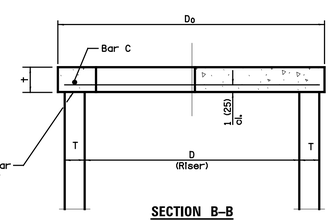

SECTION B–B

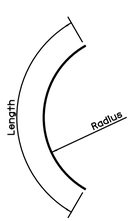

BAR C

TABLE

D	T	Do (min.)	t	Reinforcement "As" W.W.F. each direction	OR Bar size	No. 4 (No. 13) Bar C Length	Radius
36 (900)	See applicable Standards	D + 2T	6 (150)	0.20 sq. in./ft. (425 sq. mm/m)	No. 4 (No. 13)	4'-0" (1.2 m)	19 (480)
4'-0" (1.2 m)			6 (150)	0.35 sq. in./ft. (740 sq. mm/m)	No. 5 (No. 16)	4'-6" (1.35 m)	26 (660)
5'-0" (1.5 m)			8 (200)	0.35 sq. in./ft. (740 sq. mm/m)	No. 5 (No. 16)	5'-0" (1.5 m)	32 (810)

GENERAL NOTES

The flat slab top may be used in lieu of the tapered tops shown on Standards 602001, 602011, 602016, 602306, 602401, or 602501 at the option of the Contractor or when field conditions prohibit the use of tapered tops.

All dimensions are in millimeters (inches) unless otherwise shown.

PRECAST REINFORCED CONCRETE FLAT SLAB TOP

STANDARD 602601–03

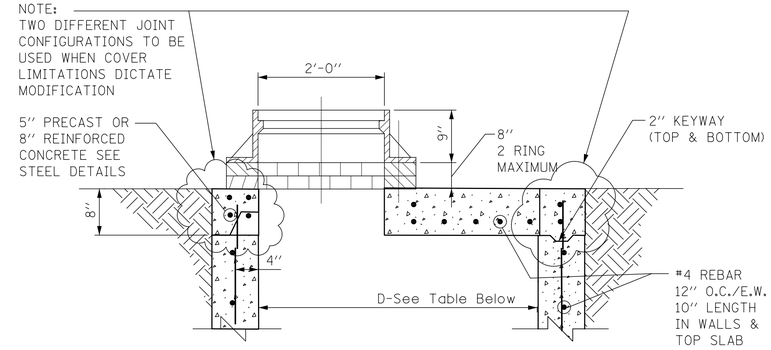

STANDARD FLAT TOP SLAB
FOR CATCH BASINS

NOTES:
FLAT TOP SLAB AAPLICATION CAN ONLY BE USED WITH WRITTEN PERMISSION FROM CDWM.
USE LATEST IDOT DETAIL, #602601

STANDARD REVISIONS	
DATE	DESCRIPTION
1/5/15	APPROVED PLAN

PERCENT COMPLETE	DATE
30	
60	
75	
90	
100	
BULLETIN	

CITY OF CHICAGO
DEPARTMENT OF WATER MANAGEMENT
BUREAU OF ENGINEERING SERVICES

FLAT TOP SLAB DETAILS

DRAWN: SBW
DESIGNED:
CHECKED:
REVIEWED:

A.4

___ OF ___

PN _____

$FILE$
$DATE$

CDWM_Details.cel 8/5/2015 10:30:51 AM

NUMBER OF PRECAST RINGS REQUIRED FOR MANHOLES OF VARIOUS HEIGHTS

TOTAL HEIGHT "H"	9" FRAME +2'-8" CORBEL =3'-5"	PRECAST RINGS 4'-0"	2'-8"	1'-4"	8"	4"	BRICK AND/OR MORTAR	TOTAL HEIGHT "H"	9" FRAME +2'-8" CORBEL =3'-5"	PRECAST RINGS 4'-0"	2'-8"	1'-4"	8"	4"	BRICK AND/OR MORTAR	TOTAL HEIGHT "H"	9" FRAME +2'-8" CORBEL =3'-5"	PRECAST RINGS 4'-0"	2'-8"	1'-4"	8"	4"	BRICK AND/OR MORTAR
5'-0"	3'-5"			1			3"	12'-0"	3'-5"	2				1	3"	19'-0"	3'-5"	3	1		1		3"
1"	"			1			4"	1"	"	2				1	4"	1"	"	3	1		1		4"
2"	"			1		1	1"	2"	"	2			1		1"	2"	"	3	1		1	1	1"
3"	"			1		1	2"	3"	"	2			1		2"	3"	"	3	1		1	1	2"
4"	"			1		1	3"	4"	"	2			1		3"	4"	"	3	1		1	1	3"
5"	"			1		1	4"	5"	"	2			1		4"	5"	"	3	1		1	1	4"
6"	"			1			1"	6"	"	2			1	1	1"	6"	"	4					1"
7"	"			1			2"	7"	"	2			1	1	2"	7"	"	4					2"
8"	"			1			3"	8"	"	2			1	1	3"	8"	"	4					3"
9"	"			1			4"	9"	"	2			1	1	4"	9"	"	4					4"
10"	"			1		1	1"	10"	"	2		1			1"	10"	"	4				1	1"
11"	"			1		1	2"	11"	"	2		1			2"	11"	"	4				1	2"
6'-0"	3'-5"			1		1	3"	13'-0"	3'-5"	2		1			3"	20'-0"	3'-5"	4				1	3"
1"	"			1		1	4"	1"	"	2		1			4"	1"	"	4				1	4"
2"	"		1		1		1"	2"	"	2		1		1	1"	2"	"	4			1		1"
3"	"		1		1		2"	3"	"	2		1		1	2"	3"	"	4			1		2"
4"	"		1		1		3"	4"	"	2		1		1	3"	4"	"	4			1		3"
5"	"		1		1		4"	5"	"	2		1		1	4"	5"	"	4			1		4"
6"	"		1		1	1	1"	6"	"	2		1	1		1"	6"	"	4			1	1	1"
7"	"		1		1	1	2"	7"	"	2		1	1		2"	7"	"	4			1	1	2"
8"	"		1		1	1	3"	8"	"	2		1	1		3"	8"	"	4			1	1	3"
9"	"		1		1	1	4"	9"	"	2		1	1		4"	9"	"	4			1	1	4"
10"	"		1		1		1"	10"	"	2		1	1	1	1"	10"	"	4		1			1"
11"	"		1		1		2"	11"	"	2		1	1	1	2"	11"	"	4		1			2"
7'-0"	3'-5"		1		1		3"	14'-0"	3'-5"	2		1	1	1	3"	21'-0"	3'-5"	4		1			3"
1"	"		1		1		4"	1"	"	2		1	1	1	4"	1"	"	4		1			4"
2"	"		1		1	1	1"	2"	"	2	1				1"	2"	"	4		1		1	1"
3"	"		1		1	1	2"	3"	"	2	1				2"	3"	"	4		1		1	2"
4"	"		1		1	1	3"	4"	"	2	1				3"	4"	"	4		1		1	3"
5"	"		1		1	1	4"	5"	"	2	1				4"	5"	"	4		1		1	4"
6"	"	1					1"	6"	"	2	1			1	1"	6"	"	4		1	1		1"
7"	"	1					2"	7"	"	2	1			1	2"	7"	"	4		1	1		2"
8"	"	1					3"	8"	"	2	1			1	3"	8"	"	4		1	1		3"
9"	"	1					4"	9"	"	2	1			1	4"	9"	"	4		1	1		4"
10"	"	1				1	1"	10"	"	2	1		1		1"	10"	"	4		1	1	1	1"
11"	"	1				1	2"	11"	"	2	1		1		2"	11"	"	4		1	1	1	2"
8'-0"	3'-5"	1				1	3"	15'-0"	3'-5"	2	1		1		3"	22'-0"	3'-5"	4		1	1	1	3"
1"	"	1				1	4"	1"	"	2	1		1		4"	1"	"	4		1	1	1	4"
2"	"	1					1"	2"	"	2	1		1	1	1"	2"	"	4	1				1"
3"	"	1					2"	3"	"	2	1		1	1	2"	3"	"	4	1				2"
4"	"	1					3"	4"	"	2	1		1	1	3"	4"	"	4	1				3"
5"	"	1					4"	5"	"	2	1		1	1	4"	5"	"	4	1				4"
6"	"	1				1	1"	6"	"	3					1"	6"	"	4	1			1	1"
7"	"	1				1	2"	7"	"	3					2"	7"	"	4	1			1	2"
8"	"	1				1	3"	8"	"	3					3"	8"	"	4	1			1	3"
9"	"	1				1	4"	9"	"	3					4"	9"	"	4	1			1	4"
10"	"	1		1			1"	10"	"	3				1	1"	10"	"	4	1		1		1"
11"	"	1		1			2"	11"	"	3				1	2"	11"	"	4	1		1		2"
9'-0"	3'-5"	1		1			3"	16'-0"	3'-5"	3				1	3"	23'-0"	3'-5"	4	1		1		3"
1"	"	1		1			4"	1"	"	3				1	4"	1"	"	4	1		1		4"
2"	"	1		1		1	1"	2"	"	3			1		1"	2"	"	4	1		1	1	1"
3"	"	1		1		1	2"	3"	"	3			1		2"	3"	"	4	1		1	1	2"
4"	"	1		1		1	3"	4"	"	3			1		3"	4"	"	4	1		1	1	3"
5"	"	1		1		1	4"	5"	"	3			1		4"	5"	"	4	1		1	1	4"
6"	"	1		1			1"	6"	"	3			1	1	1"	6"	"	5					1"
7"	"	1		1			2"	7"	"	3			1	1	2"	7"	"	5					2"
8"	"	1		1			3"	8"	"	3			1	1	3"	8"	"	5					3"
9"	"	1		1			4"	9"	"	3			1	1	4"	9"	"	5					4"
10"	"	1		1		1	1"	10"	"	3		1			1"	10"	"	5				1	1"
11"	"	1		1		1	2"	11"	"	3		1			2"	11"	"	5				1	2"
10'-0"	3'-5"	1		1		1	3"	17'-0"	3'-5"	3		1			3"	24'-0"	3'-5"	5				1	3"
1"	"	1		1		1	4"	1"	"	3		1			4"	1"	"	5				1	4"
2"	"	1	1		1		1"	2"	"	3		1		1	1"	2"	"	5			1		1"
3"	"	1	1		1		2"	3"	"	3		1		1	2"	3"	"	5			1		2"
4"	"	1	1		1		3"	4"	"	3		1		1	3"	4"	"	5			1		3"
5"	"	1	1		1		4"	5"	"	3		1		1	4"	5"	"	5			1		4"
6"	"	1	1		1	1	1"	6"	"	3		1	1		1"	6"	"	5			1	1	1"
7"	"	1	1		1	1	2"	7"	"	3		1	1		2"	7"	"	5			1	1	2"
8"	"	1	1		1	1	3"	8"	"	3		1	1		3"	8"	"	5			1	1	3"
9"	"	1	1		1	1	4"	9"	"	3		1	1		4"	9"	"	5			1	1	4"
10"	"	1	1		1		1"	10"	"	3		1	1	1	1"	10"	"	5		1			1"
11"	"	1	1		1		2"	11"	"	3		1	1	1	2"	11"	"	5		1			2"
11'-0"	3'-5"	1	1		1		3"	18'-0"	3'-5"	3		1	1	1	3"	25'-0"	3'-5"	5		1			3"
1"	"	1	1		1		4"	1"	"	3		1	1	1	4"	1"	"	5		1			4"
2"	"	1	1		1	1	1"	2"	"	3	1				1"	2"	"	5		1		1	1"
3"	"	1	1		1	1	2"	3"	"	3	1				2"	3"	"	5		1		1	2"
4"	"	1	1		1	1	3"	4"	"	3	1				3"	4"	"	5		1		1	3"
5"	"	1	1		1	1	4"	5"	"	3	1				4"	5"	"	5		1		1	4"
6"	"	2					1"	6"	"	3	1			1	1"	6"	"	5		1	1		1"
7"	"	2					2"	7"	"	3	1			1	2"	7"	"	5		1	1		2"
8"	"	2					3"	8"	"	3	1			1	3"	8"	"	5		1	1		3"
9"	"	2					4"	9"	"	3	1			1	4"	9"	"	5		1	1		4"
10"	"	2				1	1"	10"	"	3	1		1		1"	10"	"	5		1	1	1	1"
11"	"	2				1	2"	11"	"	3	1		1		2"	11"	"	5		1	1	1	2"

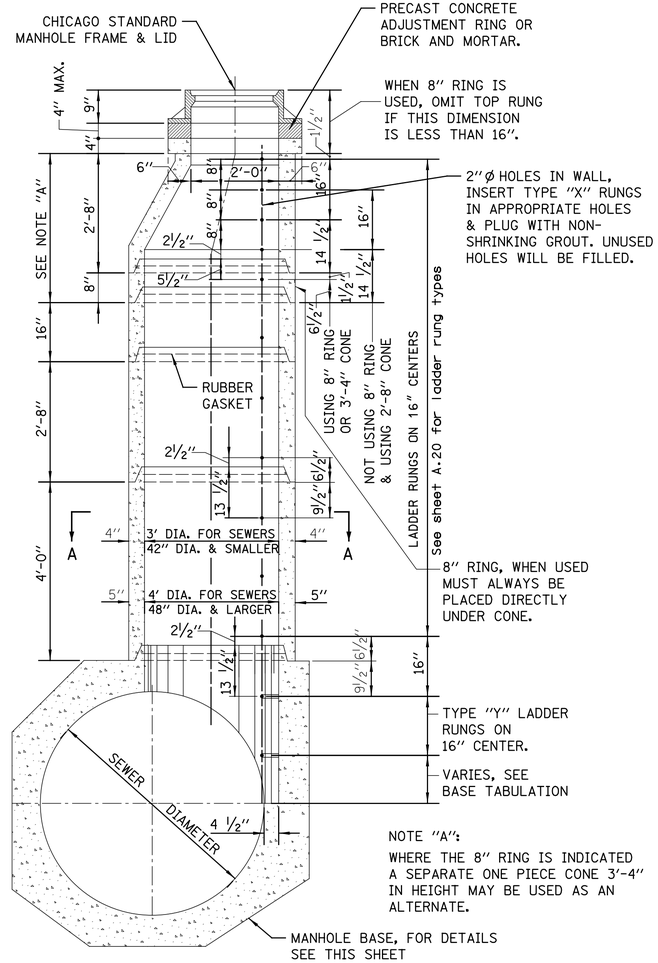

NOTE "A":

WHERE THE 8" RING IS INDICATED A SEPARATE ONE PIECE CONE 3'-4" IN HEIGHT MAY BE USED AS AN ALTERNATE.

DETAIL OF PRECAST RINGS

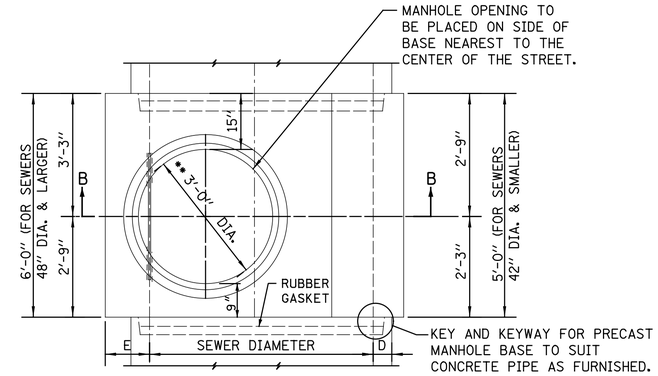

PLAN

** 3'-0" DIA. FOR SEWERS 42" DIA. & SMALLER
** 4'-0" DIA. FOR SEWERS 48" DIA. & LARGER

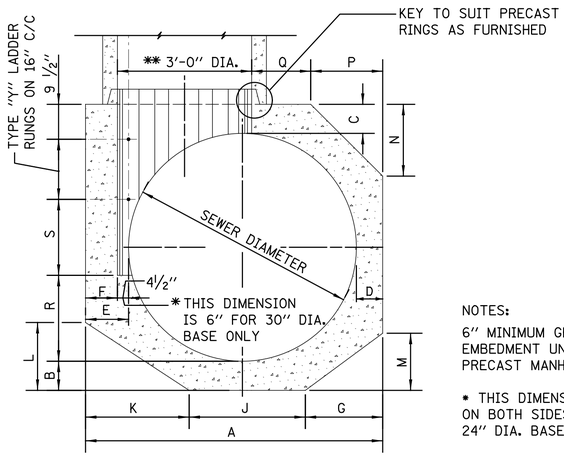

SECTION B-B

NOTES:

6" MINIMUM GRANULAR EMBEDMENT UNDER ALL PRECAST MANHOLE BASES

* THIS DIMENSION IS 6" ON BOTH SIDES FOR A 24" DIA. BASE

DETAIL OF PRECAST BASE

SEWER DIA.	DIMENSIONS OF PRECAST MANHOLE BASE A	B	C	D	E	F	G	J	K	L	M	N	P	Q	R	S	# "Y" RUNGS
120"	12'-4½"	12"	12"	12"	16½"	12"	4'-0"	4'-0"	4'-4½"	2'-7½"	2'-5"	3'-6"	3'-6"	3'-10½"	2'-0"	18½"	6
108"	11'-4½"	12"	12"	12"	16½"	12"	3'-8"	3'-8"	4'-0½"	2'-5"	2'-2"	3'-2½"	3'-2½"	3'-2"	2'-0"	6½"	6
102"	10'-10½"	12"	12"	12"	16½"	12"	3'-6"	3'-6"	3'-10½"	2'-4"	2'-1"	3'-0"	3'-0"	2'-10½"	2'-0"	16½"	5
96"	10'-2½"	11"	11"	11"	15½"	11"	3'-3"	3'-3"	3'-8½"	2'-3"	23"	2'-10½"	2'-10½"	2'-5"	2'-0"	9½"	5
90"	9'-8½"	11"	11"	11"	15½"	11"	3'-1"	3'-1"	3'-6½"	2'-1½"	22"	2'-9"	2'-9"	2'-0½"	2'-0"	19½"	4
84"	9'-0½"	10"	10"	10"	14½"	10"	2'-11"	2'-11"	3'-2½"	23"	21"	2'-5½"	2'-5½"	1'-9"	2'-0"	12½"	4
78"	8'-6½"	10"	10"	10"	14½"	10"	2'-9"	2'-9"	3'-0½"	22"	20"	2'-4½"	2'-4½"	1'-4"	2'-0"	6½"	4
72"	7'-10½"	9"	9"	9"	13½"	9"	2'-6"	2'-6"	2'-10½"	21"	18"	2'-2¼"	2'-2¼"	11¼"	2'-0"	15½"	3
66"	7'-4½"	9"	9"	9"	13½"	9"	2'-4"	2'-4"	2'-8½"	19½"	17"	2'-0½"	2'-0½"	7"	2'-0"	9½"	3
60"	6'-8½"	8"	8"	8"	12½"	8"	2'-1½"	2'-1"	2'-6"	18"	15"	1'-5½"	1'-5½"	7"	2'-0"	18½"	2
54"	6'-2½"	8"	8"	8"	12½"	8"	23½"	23"	2'-4"	17"	14"	11½"	11½"	7"	2'-0"	12½"	2
48"	5'-6½"	7"	7"	7"	11½"	7"	20½"	21"	2'-1"	15"	12½"	4½"	4½"	7"	2'-0"	21½"	1
42"	5'-0½"	7"	7"	7"	11½"	7"	18½"	19"	23"	14"	11"	—	—	17½"	21"	18½"	1
36"	4'-4½"	6"	6"	6"	10½"	6"	16"	16"	20½"	12½"	9½"	—	—	10½"	18"	14½"	1
30"	4'-0"	6"	6"	6"	12"	6"	14"	14"	20"	12"	8½"	—	—	6"	15"	11½"	1
24"	4'-0"	6"	6"	12"	12"	6"	16"	16"	16"	9½"	9½"	—	—	6"	12"	8½"	1

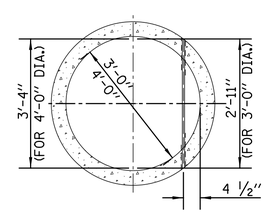

1"Ø LADDER RUNG,TYPE "X", LENGTH 2'-11" OR 3'-4" INSERTED INTO 2"Ø HOLE IN WALL & PLUGGED BY MANUFACTURER WITH NON-SHRINKING GROUT.

SECTION A-A

NOTES:

PRECAST CONCRETE RINGS MUST CONFORM TO A.S.T.M. DESIGNATION C76 FOR "REINFORCED CONCRETE CULVERT, STORM DRAIN, AND SEWER PIPE", CLASS II, WALL B.

STANDARD LENGTHS OF RINGS ARE: 4'-0", 2'-8". 1'-4", 0'-8" AND 0'-4" COLLAR.

ALL REINFORCEMENT STEEL REQUIRED FOR PRECAST RINGS MUST BE INCLUDED IN THE PRICE BID FOR ALL MANHOLE ITEMS.

STANDARD REVISIONS	
DATE	DESCRIPTION
12/28/15	APPROVED PLAN

PERCENT COMPLETE	DATE
30	
60	
75	
90	
100	
BULLETIN	

CITY OF CHICAGO
DEPARTMENT OF WATER MANAGEMENT
BUREAU OF ENGINEERING SERVICES

TYPE "A" MANHOLE PRECAST BASES AND RINGS

DRAWN: SBW
DESIGNED:
CHECKED:
REVIEWED:

A.5

___ OF ___

PN _____

$FILE$
$DATE$

CDWM_Details.cel 12/28/2015 10:08:41 AM

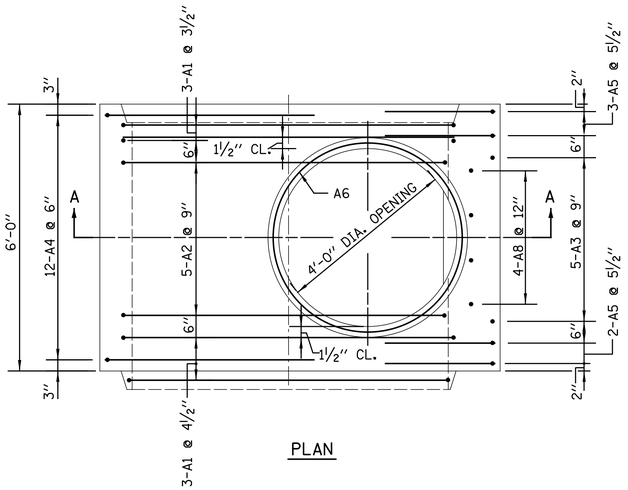

PLAN

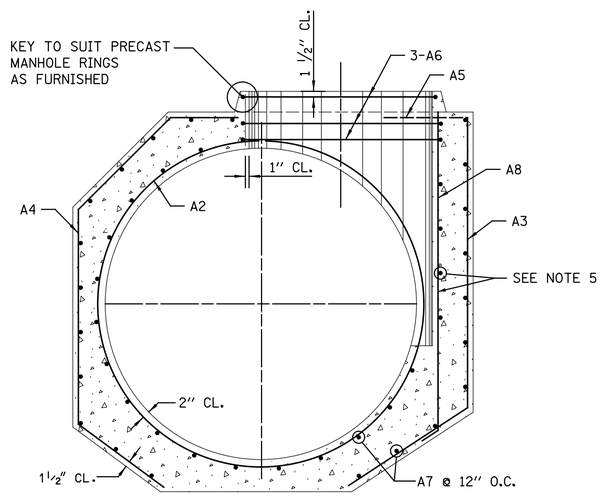

SECTION A-A

MANHOLE BASE FOR SEWERS 48'' DIA. TO 120'' DIA. INCLUSIVE

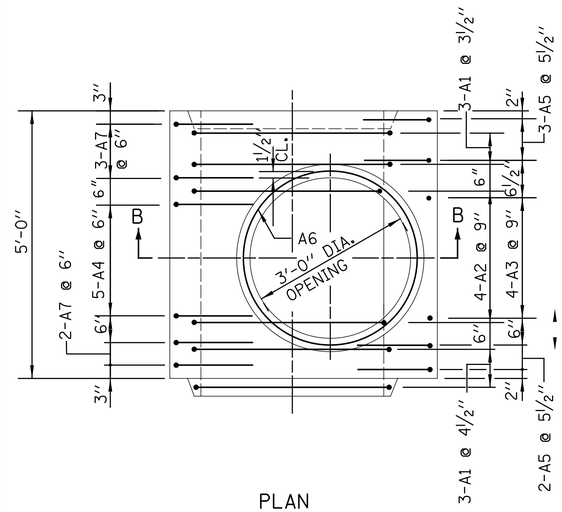

PLAN

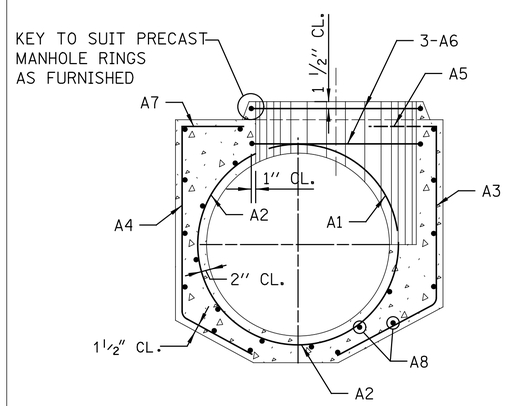

SECTION B-B

MANHOLE BASE FOR SEWERS 36'' DIA. AND 42'' DIA.

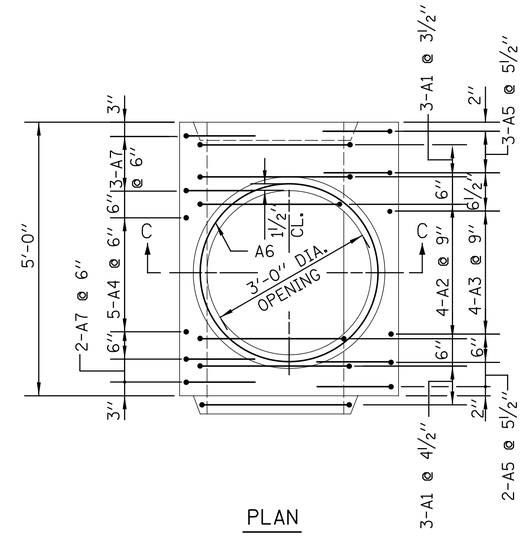

PLAN

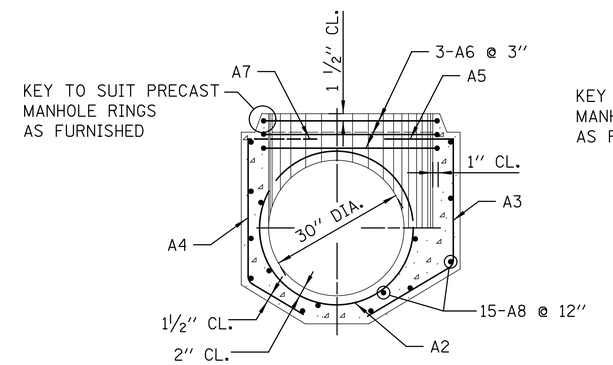

SECTION C-C

MANHOLE BASE FOR 30'' DIA. SEWERS

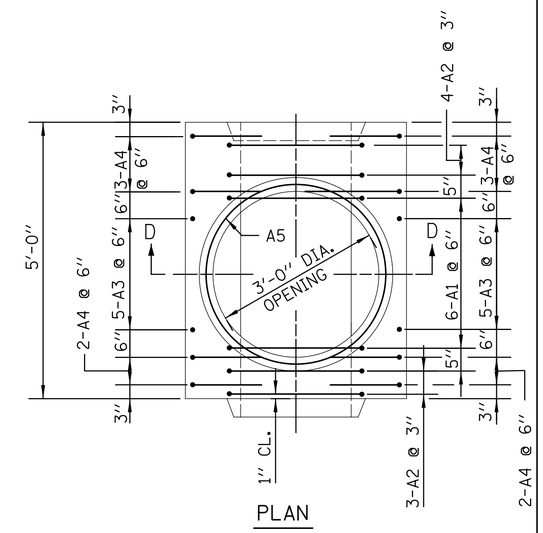

PLAN

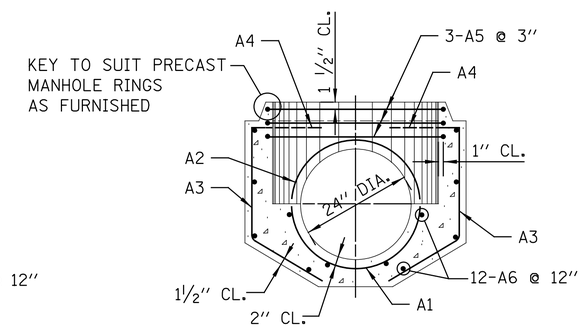

SECTION D-D

MANHOLE BASE FOR 24'' DIA. SEWERS

NOTES:
1. TWO LAYERS OF REINFORCEMENT FOR 66'' DIA. MANHOLE AND OVER.

STANDARD REVISIONS	
DATE	DESCRIPTION
1/5/15	REVISION

PERCENT COMPLETE	DATE
30	
60	
75	
90	
100	
BULLETIN	

CITY OF CHICAGO
DEPARTMENT OF WATER MANAGEMENT
BUREAU OF ENGINEERING SERVICES

REINFORCEMENT FOR TYPE "A" PRECAST MANHOLE BASES

DRAWN: SBW
DESIGNED:
CHECKED:
REVIEWED:

A.6

___ OF ___

PN _____

$FILE$
$DATE$

CDWM_Details.cel 8/5/2015 10:44:36 AM

SCHEDULE OF REINFORCEMENT

STRUCTURE	REINFORCEMENT BAR							BENDING DIMENSIONS											
	MARK	SIZE NO.	TYPE	LENGTH	NO. REQD.	WEIGHT – LBS EACH	WEIGHT – LBS TOTAL	A	B	C	D	E	F	G	H	J	K	O	R
BASES FOR TYPE "A" MANHOLES (Precast) 120" DIA.	120A1	8	T3	35'-4¾"	6	94.51	567										2'-8"	10'-5"	
	120A2	7	9	22'-5"	5	45.82	229		22'-5"						8'-0"			8'-7½"	5'-2½"
	120A3	6	12	14'-4⅝"	5	21.61	108			9'-6⅝"	4'-10"				4'-3½"		2'-2½"		
	120A4	7	D10	19'-0⅛"	12	38.86	466	4'-6"	5'-11½"	4'-10¼"	3'-8⅜"	3'-10¼"	2'-3¾"		3'-5⅛"		3'-5⅛"		
	120A5	8	12	17'-10⅝"	5	47.76	239		3'-6"	9'-6⅝"	4'-10"				4'-3½"		2'-2½"		
	120A6	5	T3	15'-1"	3	15.74	47										20"	4'- 3¼"	
	120A7	4	STR.	5'-8"	66	3.79	250												
	120A8	5	12	10'-9"	4	11.21	45			9'-9"	1'-0"				10¼"		6¼"		
	TOTAL						1951												
108" DIA.	108A1	7	T3	31'-11"	6	65.24	391										2'-4"	9'-5"	
	108A2	6	9	20'-2⅝"	5	30.37	152		20'-2⅝"						7'-2½"			7'-9⅝"	4'-8½"
	108A3	6	12	12'-9"	5	19.15	96			8'-5"	4'-4"				3'-8½"		2'-2¾"		
	108A4	7	D10	17'-0⅜"	12	34.81	418	4'-1"	5'-6¼"	4'-5¼"	2'-11⅞"	3'-6"	2'-1¼"		3'-1⅝"		3'-1⅝"		
	108A5	7	12	16'-0"	5	32.70	163		3'-3"	8'-5"	4'-4"				3'-8½"		2'-2¾"		
	108A6	5	T3	15'-1"	3	15.74	47										20"	4'- 3¼"	
	108A7	4	STR.	5'-8"	62	3.79	234												
	108A8	5	12	9'-8"	4	10.09	40			8'-8"	1'-0"				10¼"		6¼"		
	TOTAL						1541												
102" DIA.	102A1	7	T3	30'-3"	6	61.83	371										2'-4"	8'-10¾"	
	102A2	6	9	19'-0"	5	28.54	143		19'-0"						6'-9½"			7'-4½"	4'-5½"
	102A3	6	12	12'-3"	5	18.40	92			8'-0"	4'-3"				3'-7⅞"		2'-2"		
	102A4	7	D10	16'-0½"	12	32.79	393	3'-9"	5'-5½"	4'-1⅝"	2'-8⅜"	3'-2½"	23"		2'-11⅛"		2'-11⅛"		
	102A5	7	12	15'-4"	5	31.34	157		3'-1"	8'-0"	4'-3"				3'-7⅞"		2'-2"		
	102A6	5	T3	15'-1"	3	15.74	47										20"	4'- 3¼"	
	102A7	4	STR.	5'-8"	58	3.79	220												
	102A8	5	12	9'-3"	4	9.65	39			8'-3"	1'-0"				10¼"		6¼"		
	TOTAL						1462												
96" DIA.	96A1	7	T3	28'-8"	6	58.38	352										2'-4"	8'-5"	
	96A2	6	9	17'-11¼"	5	26.94	135		17'-11¼"						6'-4 "			7'-2½"	4'-2½"
	96A3	6	12	11'-6"	5	17.27	86			7'-5"	4'-1"				3'-6"		2'-1¼"		
	96A4	7	D10	14'-10⅝"	12	30.38	365	3'-8"	5'-0"	3'-11½"	2'-2⅛"	3'-1¾"	22½"		2'-9⅝"		2'-9⅝"		
	96A5	7	12	13'-5"	5	27.43	137		2'-10¾"	7'-5"	4'-1"				3'-6"		2'-1¼"		
	96A6	5	T3	15'-1"	3	15.74	47										20"	4'-3¼"	
	96A7	4	STR.	5'-8"	54	3.79	204												
	96A8	5	12	8'-8"	4	9.04	36			7'-8"	1'-0"				10"		6⅝"		
	TOTAL						1362												
90" DIA.	90A1	6	T3	26'-6"	6	39.80	239										2'-0"	7'-10½"	
	90A2	5	9	16'-7¼"	5	17.32	87		16'-7¼"						5'-10¼"			6'-9⅝"	3'-11¼"
	90A3	6	12	11'-0"	5	16.52	83			7'-0"	4'-0"				3'-5"		2'-0¾"		
	90A4	6	D10	13-9⅜"	12	20.70	248	3'-6"	4'-7½"	3'-9½"	22⅝"	3'-0"	21½"		2'-8⅛"		2'-8⅛"		
	90A5	6	12	13'-9"	5	20.65	105		2'-9"	7'-0"	4'-0"				3'-5"		2'-0¾"		
	90A6	5	T3	15'-1"	3	15.74	47										20"	4'-3¼"	
	90A7	4	STR.	5'-8"	50	3.79	189												
	90A8	5	12	8'-2"	4	8.51	34			7'-2"	1'-0"				9¾"		7"		
	TOTAL						1030												
84" DIA.	84A1	6	T3	25'-3"	6	37.93	228										2'-0"	7'-4½"	
	84A2	5	9	15'-5½"	5	16.12	81		15'-5½"						5'-5¼"			8'-2¼"	3'-8¼"
	84A3	5	12	9'-10"	5	10.26	51			6'-4"	3'-6"				3'-0"		21½"		
	84A4	6	D10	12-6⅛"	12	18.79	225	3'-2"	4'-4⅝"	3'-4½"	1'-6⅞"	2'-8½"	19½"		2'-4⅝"		2'-4⅝"		
	84A5	6	12	12'-5"	5	18.65	93		2'-7"	6'-4"	3'-6"				3'-0"		21½"		
	84A6	5	T3	15'-1"	3	15.74	47										20"	4'-3¼"	
	84A7	4	STR.	5'-8"	46	3.79	174												
	84A8	5	12	7'-6"	4	7.82	31			6'-6"	1'-0"				10¼"		6¼"		
	TOTAL						930												
78" DIA.	78A1	6	T3	23'-7"	6	35.42	213										2'-0"	6'-10½"	
	78A2	5	9	14'-3¾"	5	14.93	75		14'-3¾"						5'-0"			7'-9¾"	3'-5¼"
	78A3	5	12	9'-3"	5	9.65	48			6'-1"	3'-2"				2'-8½"		19⅝"		
	78A4	6	D10	11-5⅛"	12	17.26	207	3'-1"	4'-0"	3'-3"	1'-1⅞"	2'-7⅝"	19⅛"		2'-3⅝"		2'-3⅝"		
	78A5	6	12	11'-9"	5	17.65	88		2'-6"	6'-1"	3'-2"				2'-8½"		19⅝"		
	78A6	5	T3	15'-1"	3	15.74	47										20"	4'-3¼"	
	78A7	4	STR.	5'-8"	42	3.79	159												
	78A8	5	12	7'-3"	4	7.56	30			6'-3"	1'-0"				9¾"		7"		
	TOTAL						867												
72" DIA.	72A1	6	T3	22'-0"	6	33.04	198										2'-0"	6'-4½"	
	72A2	5	9	13'-3"	5	13.82	69		13'-3"						4'-8"			5'-6"	3'-2"
	72A3	5	12	8'-6"	5	8.87	44			5'-6"	3'-0"				2'-6¾"		18¾"		
	72A4	6	D10	9'-11⅜"	12	14.94	179	2'-6"	3'-8¼"	3'-0"	9⅛"	2'-1¾"	15½"		2'-1⅜"		2'-1⅜"		
	72A5	6	12	10'-9"	5	16.15	81		2'-3"	5'-6"	3'-0"				2'-6¾"		18¾"		
	72A6	5	T3	15'-1"	3	15.74	47										20"	4'-3¼"	
	72A7	4	STR.	5'-8"	38	3.79	144												
	72A8	5	12	6'-9"	4	7.04	28			5'-9"	1'-0"				10¼"		6¼"		
	TOTAL						790												

STRUCTURE	REINFORCEMENT BAR							BENDING DIMENSIONS											
	MARK	SIZE NO.	TYPE	LENGTH	NO. REQD.	WEIGHT – LBS EACH	WEIGHT – LBS TOTAL	A	B	C	D	E	F	G	H	J	K	O	R
BASES FOR TYPE "A" MANHOLES (Precast) 66" DIA.	66A1	6	T3	20'-5	6	30.73	184										2'-0"	5'-10½"	
	66A2	5	9	11'-10"	5	12.35	62		11'-10"						4'-2⅛"			5'-1¾"	2'-11⅛"
	66A3	5	12	8'-2"	5	8.52	43			5'-2"	3'-0"				2'-7"		18½"		
	66A4	5	D10	9'-1⅜"	12	9.51	114	2'-6"	3'-5"	2'-9½"	4⅞"	2'-2"	15"		23⅝"		23⅝"		
	66A5	6	12	10'-4"	5	15.50	78		2'-2"	5'-2"	3'-0"				2'-7"		18½"		
	66A6	5	T3	15'-1"	3	15.74	47										20"	4'-3¼"	
	66A7	4	STR.	5'-8"	36	3.79	136												
	66A8	5	12	6'-5"	4	6.69	27			5'-5"	1'-0"				10¼"		6¼"		
	TOTAL						691												
60" DIA.	60A1	6	T3	18'-11"	6	28.41	170										2'-0"	5'-4½"	
	60A2	5	9	10'-9"	5	11.21	56		10'-9"						3'-9½"			5'-11½"	2'-8"
	60A3	5	12	7'-4"	5	7.65	38			4'-7"	2'-9"				2'-4⅜"		17"		
	60A4	5	D10	8'-1⅜"	12	8.46	102	2'-3"	3'-6"	23½"	4⅞"	23½"	14"		16⅝"		16⅝"		
	60A5	5	12	9'-4"	5	9.74	49		2'-0"	4'-7"	2'-9"				2'-4⅜"		17"		
	60A6	5	T3	15'-1"	3	15.74	47										20"	4'-3¼"	
	60A7	4	STR.	5'-8"	27	3.79	102												
	TOTAL						564												
54" DIA.	54A1	6	T3	17'-4"	6	26.04	156										2'-0"	4'-10½"	
	54A2	5	9	9'-5½"	5	9.87	49		9'-5½"						3'-3¾"			4'-5½"	2'-5"
	54A3	5	12	6'-8"	5	6.95	28			4'-2"	2'-6"				2'-1¾"		15½"		
	54A4	5	D10	7'-2⅛"	12	7.55	91	2'-0"	3'-7"	4⅞"	20⅝"	12⅜"			10⅝"		10⅝"		
	54A5	5	12	8'-8"	5	9.04	45		2'-0"	4'-2"	2'-6"				2'-1¾"		15½"		
	54A6	5	T3	15'-1"	3	15.74	47										20"	4'-3¼"	
	54A7	4	STR.	5'-8"	25	3.79	95												
	TOTAL						511												
48" DIA.	48A1	6	T3	15'-9"	6	23.66	142										2'-0"	4'-4½"	
	48A2	5	9	8'-0½"	5	8.39	42		8'-0½"						2'-9½"			4'-2"	2'-2"
	48A3	5	12	5'-9"	5	6.00	30			3'-8"	2'-1"				21⅝"		12¾"		
	48A4	5	D10	6'-5½"	12	6.74	81	2'-0"	3'-7½"	5⅛"	4⅞"	17"	17"		3⅝"		3⅝"		
	48A5	5	12	7'-6"	5	7.82	39		21"	3'-8"	2'-1"				21⅜"		12¾"		
	48A6	5	T3	15'-1"	3	17.74	47										20"	4'-3¼"	
	48A7	4	STR.	5'-8"	22	3.79	83												
	TOTAL						464												
42" DIA.	42A1	6	T3	14'-2"	6	21.28	128										2'-0"	3'-10½"	
	42A2	5	9	7'-6"	4	7.82	31		7'-6"						2'-9"			3'-3"	23"
	42A3	5	12	5'-4"	4	5.56	22			3'-3"	2'-1"				22¼"		13½"		
	42A4	5	12	6'-4"	5	6.61	33		14"	3'-6"	20"				17¼"		10¼"		
	42A5	5	12	7'-1"	5	7.39	37		21"	3'-3"	2'-1"				21½"		12⅞"		
	42A6	5	T3	11'-11"	3	12.43	37										20"	3'-3¼"	
	42A7	5	12	6'-8"	5	6.95	35		18"	3'-6"	20"				17¼"		10¼"		
	42A8	4	STR.	4'-8"	21	3.12	66												
	TOTAL						389												
36" DIA.	36A1	6	T3	12'-7"	6	18.90	113										2'-0"	3'-4½"	
	36A2	5	9	6'-0"	4	6.26	25		6'-0"						2'-2"			3'-0"	20"
	36A3	5	12	4'-6"	4	4.69	19			2'-9"	21"				18"		10¾"		
	36A4	5	12	5'-0"	5	5.22	26		7"	3'-0"	17"				14½"		8¾"		
	36A5	5	12	5'-9"	5	6.00	30		15"	2'-9"	21"				18"		10¾"		
	36A6	5	T3	11'-11"	3	12.43	37										20"	3'-3¼"	
	36A7	5	12	5'-8"	5	5.91	30		15"	3'-0"	17"				14½"		8¾"		
	36A8	4	STR.	4'-8"	18	3.12	56												
	TOTAL						336												
30" DIA.	30A1	6	T3	11'-1"	6	16.65	100										2'-0"	2'-10½"	
	30A2	5	9	4'-4"	4	4.52	18		4'-4"						18"			2'-10"	17"
	30A3	5	12	4'-0"	4	4.17	17			2'-3"	21"				18"		10¾"		
	30A4	5	12	3'-10"	5	4.00	20			2'-7"	15"				12¾"		7¾"		
	30A5	5	12	5'-3"	5	5.48	27		15"	2'-3"	21"				18"		10¾"		
	30A6	5	T3	11'-11"	3	12.43	37										20"	3'-3¼"	
	30A7	5	12	5'-1"	5	5.30	26		15"	2'-7"	15"				12¾"		7¾"		
	30A8	4	STR	4'-8"	15	3.12	47												
	TOTAL						292												
24" DIA.	24A1	6	9	3'-5"	6	5.13	31		3'-5"						13"			2'-3½"	14¼"
	24A2	6	T3	9'-4"	7	14.02	98										22"	2'-4¼"	
	24A3	5	12	3'-6"	10	3.65	37			2'-1"	17"				14½"		8¾"		
	24A4	5	12	4'-9"	10	4.96	50		15"	2'-1"	17"				14½"		8¾"		
	24A5	5	T3	11'-11"	3	12.43	37										20"	3'-3¼"	
	24A6	4	STR.	4'-8"	12	3.12	37												
	TOTAL						290												

STRUCTURAL NOTES:

PLACING OF CONCRETE- CONCRETE MUST BE PLACED IN ACCORDANCE WITH THE METHOD OUTLINED IN THE CITY OF CHICAGO STANDARD SPECIFICATIONS.
CONSTRUCTION JOINTS - JOINTS NOT INDICATED ON THE DRAWINGS MUST BE SO MADE AND LOCATED AS NOT TO IMPAIR THE STRENGTH OF THE STRUCTURE AND MUST BE APPROVED BY THE COMMISSIONER. JOINTS MUST BE CONSTRUCTED IN ACCORDANCE WITH THE METHOD OUTLINED IN THE SPECIFICATIONS.

CONCRETE PROTECTION FOR REINFORCEMENT- ALL REINFORCING STEEL MUST HAVE CLEAR CONCRETE COVERING AS FOLLOWS (UNLESS OTHERWISE NOTED) :
3" AT EXTERIOR SURFACES WHERE CONCRETE IS DEPOSITED AGAINST THE GROUND;
2.5" AT SURFACES WHERE CONCRETE IS FORMED BUT SUBSEQUENTLY WILL BE IN CONTACT WITH SEWAGE; 2" AT ALL OTHER SURFACES.

REINFORCING STEEL- ALL REINFORCING BARS MUST BE ACCURATELY PLACED AND SECURELY SUPPORTED BY BAR SUPPORTS, SPACERS OR HIGH CHAIRS.
ALL LAPS IN REINFORCING STEEL MUST BE BASED UPON THE 1989, ACI BUILDING CODE.
UNLESS OTHERWISE NOTED. HOOKS AND BENDS ON BARS MUST CONFORM TO RECOMMENDED DETAILS AS GIVEN IN THE "MANUAL OF STANDARD PRACTICE", C.R.S.I. 1990.

THE FOLLOWING ABBREVIATIONS ARE USED TO INDICATE THE LOCATION OF REINFORCING BARS:

T.	DENOTES	TOP	N.F.	DENOTES	NEAR FACE
BOT.	DENOTES	BOTTOM	F.F.	DENOTES	FAR FACE
I.F.	DENOTES	INSIDE FACE	E.F.	DENOTES	EACH FACE
O.F.	DENOTES	OUTSIDE FACE	E.W.	DENOTES	EACH WAY

PLACING BAR SUPPORTS- ALL REINFORCING BARS MUST BE SUPPORTED, ANCHORED AND TIED AND MUST CONFORM TO THE "RECOMMENDED PRACTICE FOR PLACING REINFORCING BARS", 1986, PREPARED BY THE CONCRETE REINFORCING STEEL INSTITUTE.

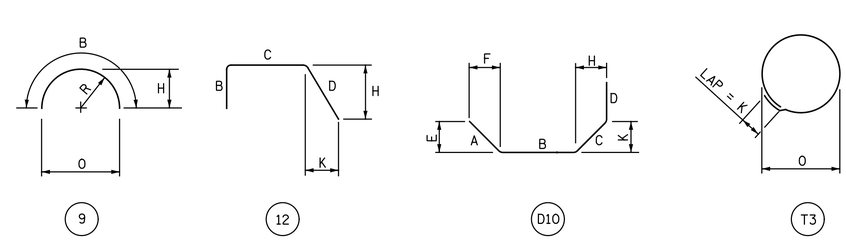

NOTES:
ALL DIMENSIONS ARE OUT TO OUT OF BAR.

BENDING RADII "R" TO OUTSIDE OF BAR.

NUMBERS IN CIRCLES DENOTE BAR TYPE.

STANDARD REVISIONS	
DATE	DESCRIPTION
1/5/15	APPROVED PLAN

PERCENT COMPLETE	DATE
30	
60	
75	
90	
100	
BULLETIN	

CITY OF CHICAGO
DEPARTMENT OF WATER MANAGEMENT
BUREAU OF ENGINEERING SERVICES

REINFORCEMENT BAR LIST
FOR TYPE "A"
PRECAST MANHOLE BASES

DRAWN: SBW
DESIGNED:
CHECKED:
REVIEWED:

A.7

___ OF ___

PN _____

$FILE$
$DATE$

CDWM_Details.cel 8/5/2015 10:45:24 AM

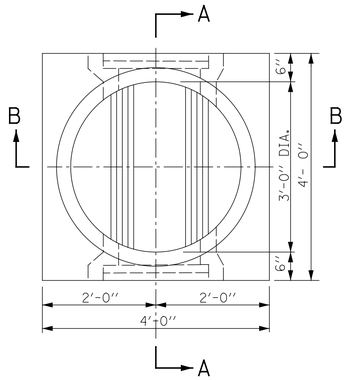

PLAN

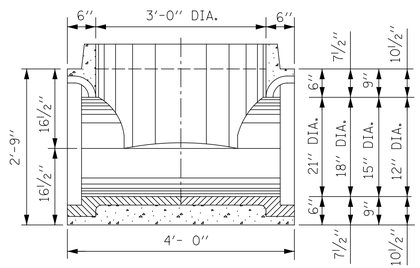

SECTION A-A

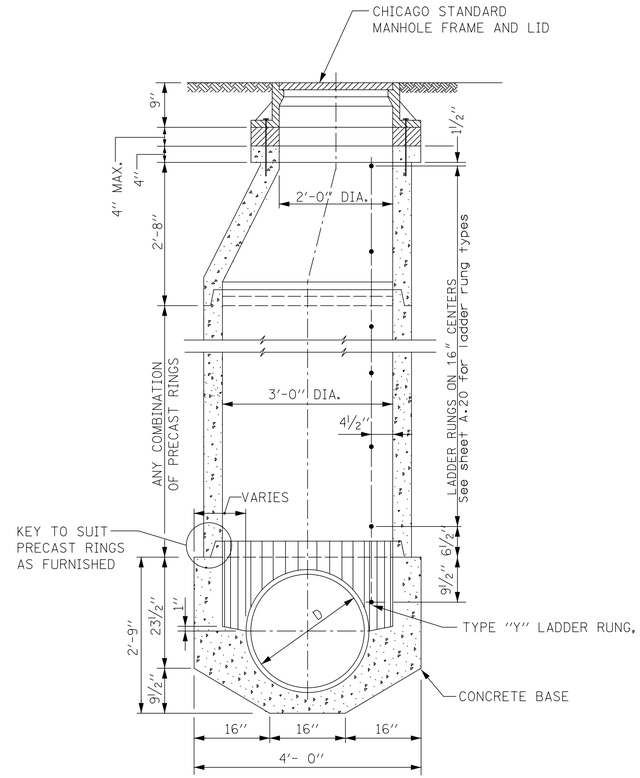

SECTION B-B

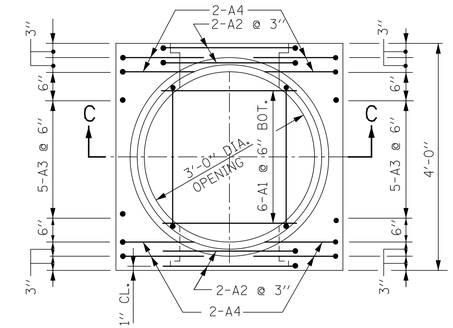

PLAN
PRECAST BASE

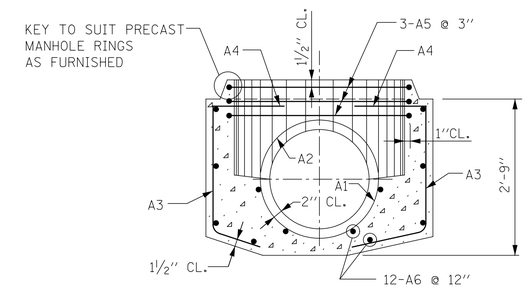

SECTION C-C

NOTE:
6'' MINIMUM GRANULAR EMBEDMENT
UNDER ALL PRECAST MANHOLE BASES

SCHEDULE OF REINFORCEMENT

STRUCTURE		REINFORCEMENT BAR							BENDING DIMENSIONS											
		MARK	SIZE NO.	TYPE	LENGTH	NO. REQD.	WEIGHT - LBS EACH	WEIGHT - LBS TOTAL	A	B	C	D	E	F	G	H	J	K	O	R
BASES FOR TYPE ''A'' MANHOLES (PRECAST)	21'' DIA.	21A1	6	9	3'-1''	6	4.63	28		3'-1''						11¼''			2'-1''	12¾''
		21A2	6	T3	8'-8''	4	13.02	52										2'-0''	2'-1½''	
		21A3	5	12	3'-3''	10	3.39	34			22''	17''				14½''		8¾''		
		21A4	5	12	4'-6''	8	4.69	38		15''	22''	17''				14½''		8¾''		
		21A5	5	T3	11'-11''	3	12.43	37										20''	3'-3¼''	
		21A6	4	STR	3'-8''	12	2.45	30												
		TOTAL						219												
	18'' DIA.	18A1	6	9	2'-8½''	6	4.07	24		2'-8½''							9¾''		22''	11¼''
		18A2	6	T3	7'-10½''	4	11.83	47										2'-0''	22½''	
		18A3	5	12	3'-3''	10	3.39	34			22''	17''					14½''	8¾''		
		18A4	5	12	4'-6''	8	4.69	38		15''	22''	17''					14½''	8¾''		
		18A5	5	T3	11'-11''	3	12.43	37										2'-0''	3'-3¼''	
		18A6	4	STR	3-8''	12	2.45	30												
		TOTAL						202												
	15'' DIA.	15A1	6	9	2'-3½''	6	3.44	21		23½''						8¼''			19''	9¾''
		15A2	6	T3	7'-1''	4	10.64	42										2'-0''	19½''	
		15A3	5	12	3'-3''	10	3.39	34			22''	17''						8¾''		
		15A4	5	12	4'-6''	8	4.69	38		15''	22''	17''				14½''		8¾''		
		15A5	5	T3	11'-11''	3	12.43	37								14½''		20''	3'-3¾''	
		15A6	4	STR	3'-8''	12	2.45	30												
		TOTAL						202												
	12'' DIA.	12A1	6	9	1'-11''	6	2.88	17		23''						6¾''			16''	8¼''
		12A2	6	T3	6'-1''	4	9.14	37										2'-0''	16½''	
		12A3	5	12	3'-3''	10	3.39	34			22''	17''				14½''		8¾''		
		12A4	5	12	4'-6''	8	4.69	38			22''	17''				14½''		8¾''		
		12A5	5	T3	11'-11''	3	12.43	37										20''	3'-3¼''	
		12A6	4	STR.	3'-8''	12	2.45	30												
		TOTAL						193												

STANDARD REVISIONS	
DATE	DESCRIPTION
1/5/15	REVISION

PERCENT COMPLETE	DATE
30	
60	
75	
90	
100	
BULLETIN	

CITY OF CHICAGO
DEPARTMENT OF WATER MANAGEMENT
BUREAU OF ENGINEERING SERVICES

TYPE ''A'' PRECAST
MANHOLE FOR SEWERS
21'' DIA. AND SMALLER

DRAWN: SBW
DESIGNED:
CHECKED:
REVIEWED:

A.8

___ OF ___

PN _____

$FILE$
$DATE$

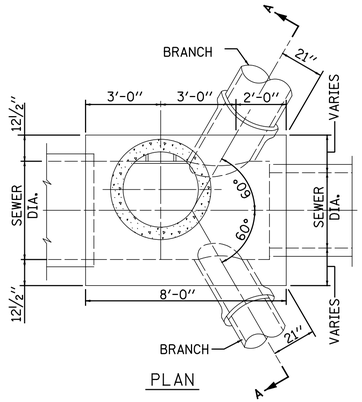

PLAN

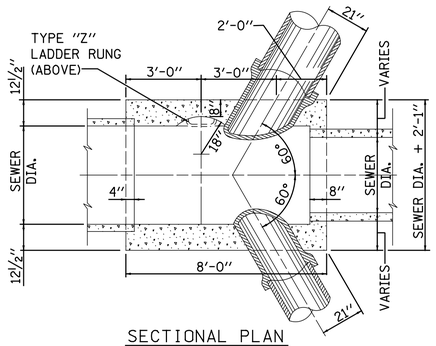

SECTIONAL PLAN

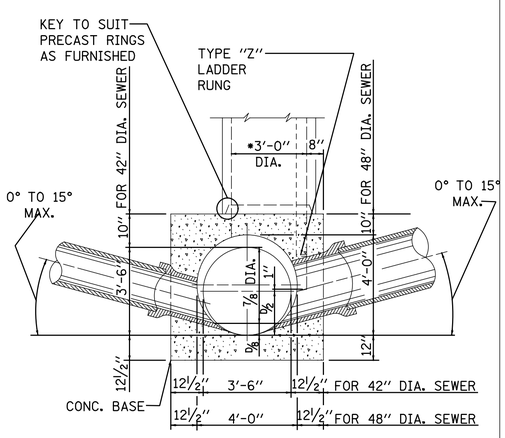

SECTION A-A

TYPE "B" MANHOLE FOR SEWERS 48" DIA. & 42" DIA.

Not To Scale

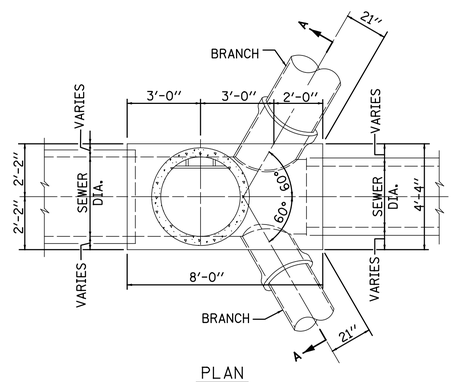

PLAN

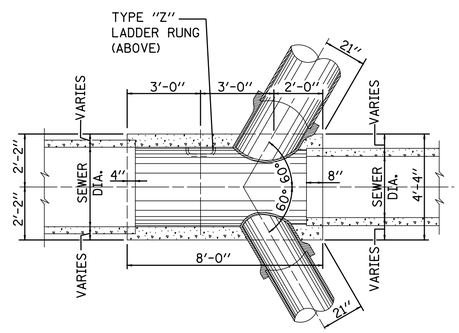

SECTIONAL PLAN

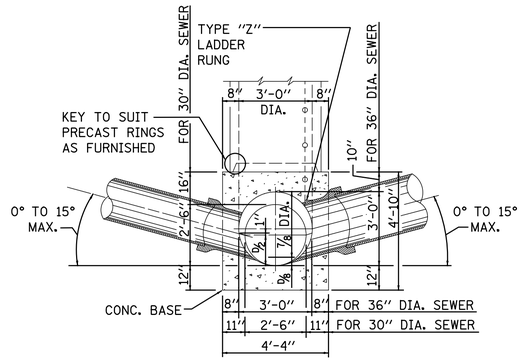

SECTION A-A

TYPE "B" MANHOLE FOR SEWERS 36" DIA. & 30" DIA.

Not To Scale

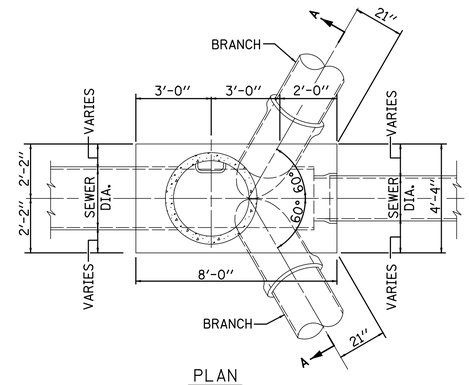

PLAN

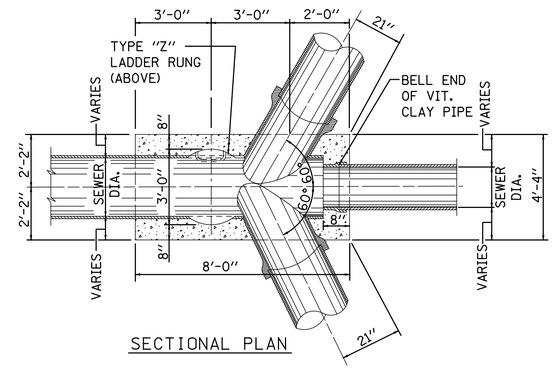

SECTIONAL PLAN

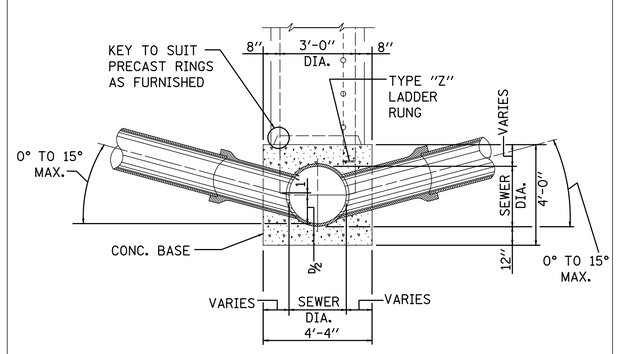

SECTION A-A

TYPE "B" MANHOLE FOR SEWERS 24" DIA. & SMALLER

Not To Scale

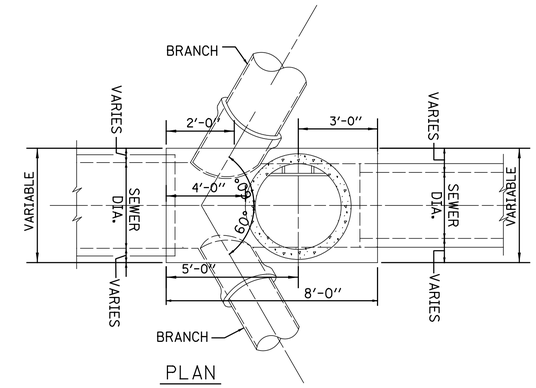

PLAN

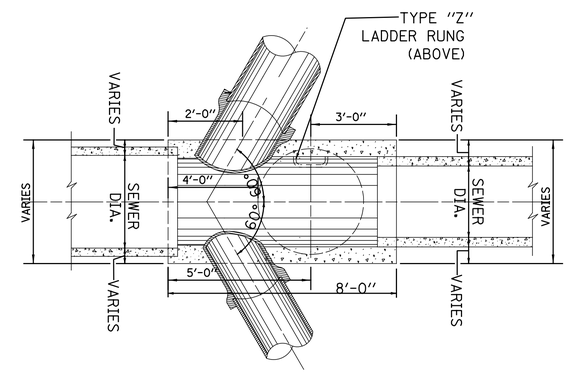

SECTIONAL PLAN

TYPICAL REVERSE TYPE "B" MANHOLE

Not To Scale

NOTES:

1. CONTRACTOR MUST SUBMIT SHOP DRAWINGS OF ALL PROPOSED MANHOLE CONFIGURATIONS FOR APPROVAL PRIOR TO SUBMISSION OF MATERIAL ORDERS.

2. CONNECTION BELLS MAY BE INSTALLED AT MANUFACTURER'S SITE, OR MORTARED IN PLACE IN THE FIELD. SEE SHEET A.11 FOR FURTHER CONFIGURATION DETAILS.

3. BASES MUST BE PRECAST WITH THE CORRECT NUMBER OF PIPE OPENINGS, CORRESPONDING TO THE REPRESENTATION IN THE PLAN AND PROFILE SHEETS.

4. PATCHING, BRICKING, OR OTHER MATERIAL METHODS OF CLOSING UNUSED HOLES WILL NOT BE ACCEPTED.

5. 6" MINIMUM GRANULAR EMBEDMENT UNDER ALL PRECAST MANHOLE BASES

STANDARD REVISIONS	
DATE	DESCRIPTION
1/5/15	APPROVED PLAN

PERCENT COMPLETE	DATE
30	
60	
75	
90	
100	
BULLETIN	

CITY OF CHICAGO
DEPARTMENT OF WATER MANAGEMENT
BUREAU OF ENGINEERING SERVICES

TYPE "B" MANHOLE

DRAWN: SBW
DESIGNED:
CHECKED:
REVIEWED:

A.9

___ OF ___

PN _____

$FILE$
$DATE$

CDWM_Details.cel 8/5/2015 10:46:37 AM

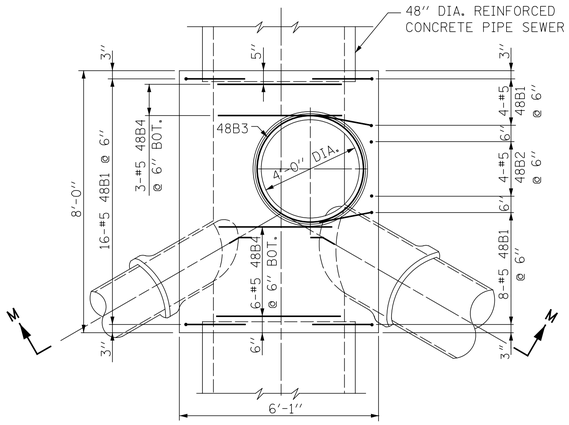

PLAN

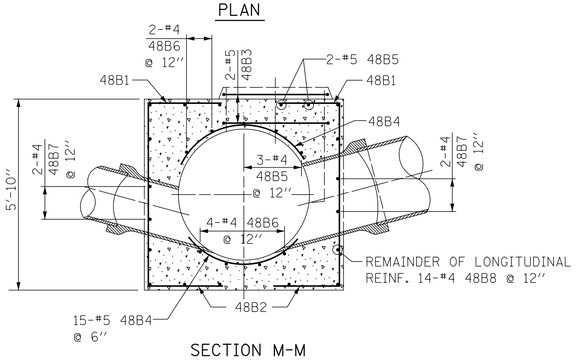

SECTION M-M

48" DIA. SEWER

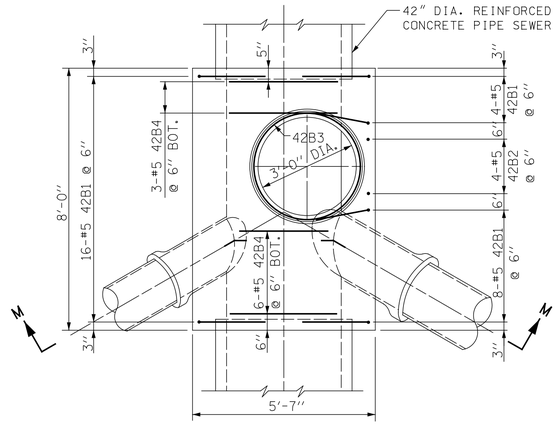

PLAN

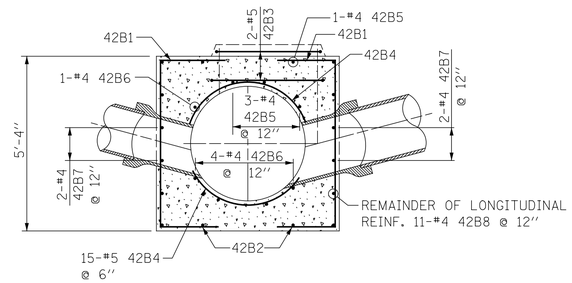

SECTION M-M

42" DIA. SEWER

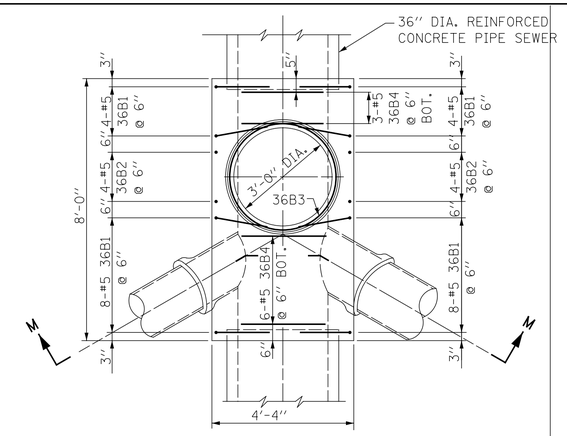

PLAN

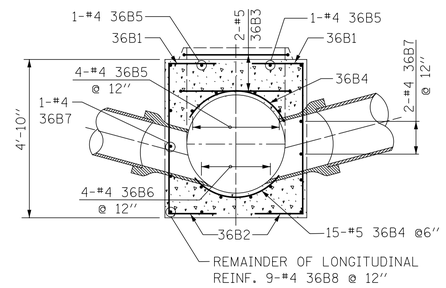

SECTION M-M

36" DIA. SEWER

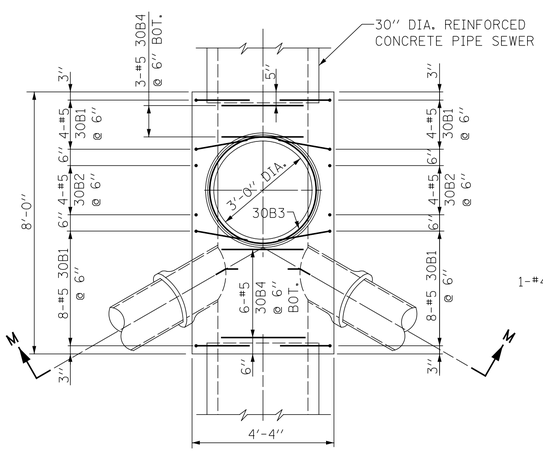

PLAN

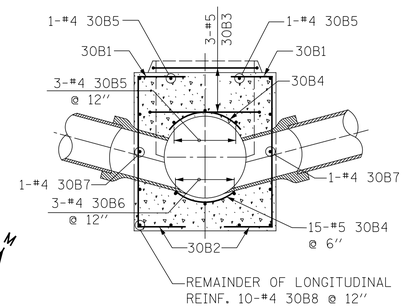

SECTION M-M

30" DIA. SEWER

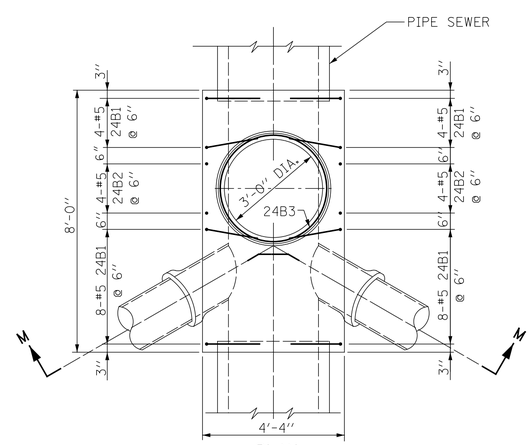

PLAN

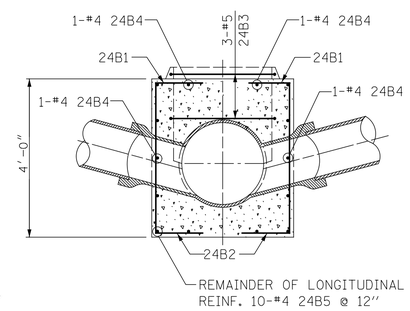

SECTION M-M

24" DIA. SEWERS & SMALLER

NOTES:

1. CONTRACTOR MUST SUBMIT SHOP DRAWINGS OF ALL PROPOSED MANHOLE CONFIGURATIONS FOR APPROVAL PRIOR TO SUBMISSION OF MATERIAL ORDERS.

2. CONNECTION BELLS MAY BE INSTALLED AT MANUFACTURER'S SITE, OR MORTARED IN PLACE IN THE FIELD. SEE SHEET A.11 FOR FURTHER CONFIGURATION DETAILS.

3. BASES MUST BE PRECAST WITH THE CORRECT NUMBER OF PIPE OPENINGS, CORRESPONDING TO THE REPRESENTATION IN THE PLAN AND PROFILE SHEETS.

4. PATCHING, BRICKING, OR OTHER MATERIAL METHODS OF CLOSING UNUSED HOLES WILL NOT BE ACCEPTED.

STANDARD REVISIONS	
DATE	DESCRIPTION
1/5/15	revision

PERCENT COMPLETE	DATE
30	
60	
75	
90	
100	
BULLETIN	

CITY OF CHICAGO
DEPARTMENT OF WATER MANAGEMENT
BUREAU OF ENGINEERING SERVICES

REINFORCEMENT FOR TYPE "B" MANHOLE BASES

DRAWN: SBW
DESIGNED:
CHECKED:
REVIEWED:

A.10

___ OF ___

PN _____

$FILE$
$DATE$

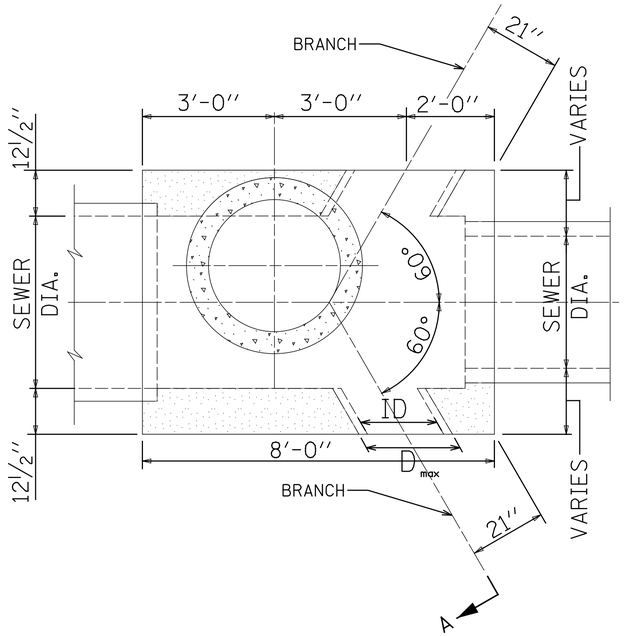

TYPICAL 4 OPENING TYPE B MANHOLE

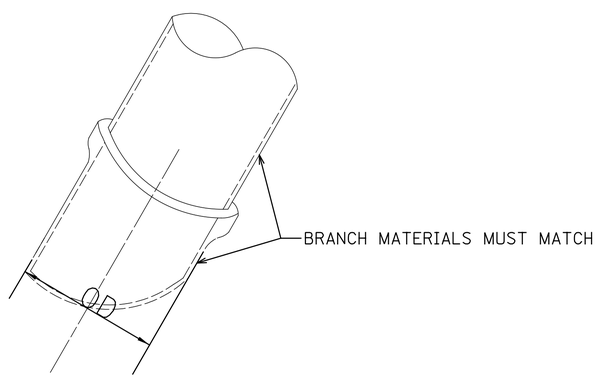

NOTES:

1. CONTRACTOR MUST SUBMIT SHOP DRAWINGS OF ALL PROPOSED MANHOLE CONFIGURATIONS FOR APPROVAL PRIOR TO SUBMISSION OF MATERIAL ORDERS.

2. CONNECTION BELLS MAY BE INSTALLED AT MANUFACTURER'S SITE, OR MORTARED IN PLACE IN THE FIELD.

3. BASES MUST BE PRECAST WITH THE CORRECT NUMBER OF PIPE OPENINGS, CORRESPONDING TO THE REPRESENTATION IN THE PLAN AND PROFILE SHEETS.

4. PATCHING, BRICKING, OR OTHER MATERIAL METHODS OF CLOSING UNUSED HOLES WILL NOT BE ACCEPTED.

BRANCH SIZING CHART

ID PIPE (in.)	MATERIAL	OD PIPE (in.)	D max* (in.)
12	VCP	14.36	18.36
15	VCP	17.8	21.8
18	VCP	21.48	25.48
21	VCP	25.54	31.54
8	DIP	9.05	13.05
10	DIP	11.1	15.1
12	DIP	13.2	17.2
14	DIP	15.3	19.3
16	DIP	17.4	21.4
18	DIP	19.5	23.5
20	DIP	21.6	25.6
24	DIP	25.8	29.8
24	RCP III	30	34
27	RCP III	33.5	37.5
30	RCP III	37	41
33	RCP III	40.5	44.5
36	RCP III	44	48
42	RCP III	51	55
Notes:			
1. If the pipe class is not shown on this table, then D max =OD pipe + 4"			
*2. Dmax indicates the maximum size of branch opening to be cast or cut into structure.			

STANDARD REVISIONS	
DATE	DESCRIPTION
12/28/15	APPROVED PLAN

PERCENT COMPLETE	DATE
30	
60	
75	
90	
100	
BULLETIN	

CITY OF CHICAGO
DEPARTMENT OF WATER MANAGEMENT
BUREAU OF ENGINEERING SERVICES

TYPE "B" MANHOLE CONFIGURATIONS

DRAWN: SBW
DESIGNED:
CHECKED:
REVIEWED:

A.11

___ OF ___

PN _____

$FILE$
$DATE$

CDWM_Details.cel 12/28/2015 10:24:31 AM

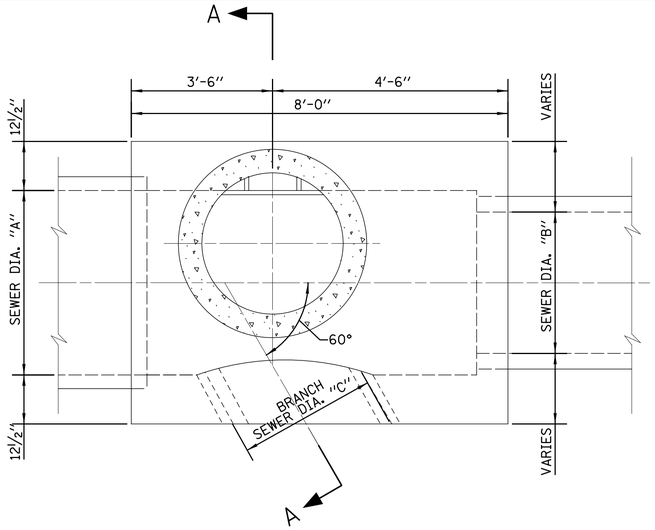

PLAN

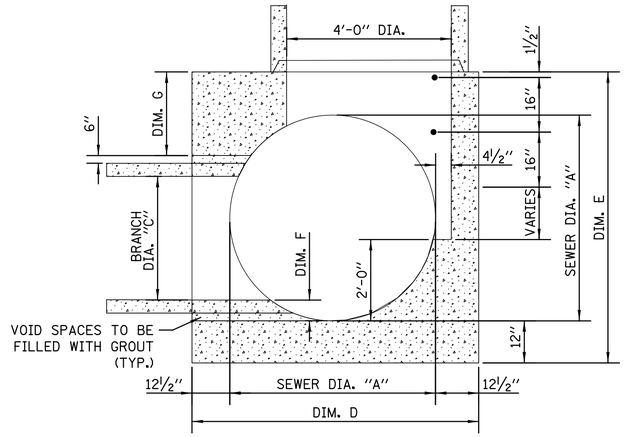

SECTION A-A

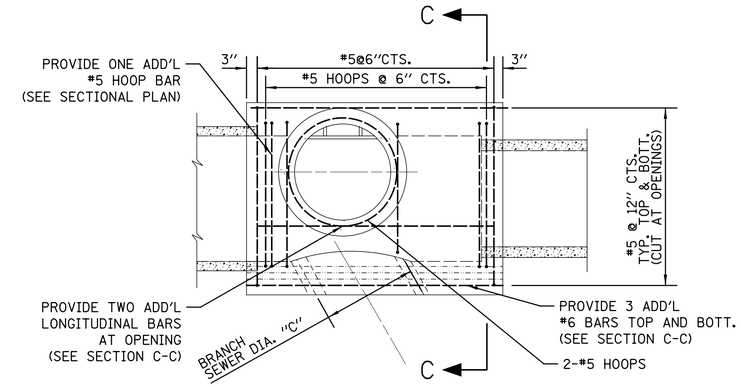

PLAN

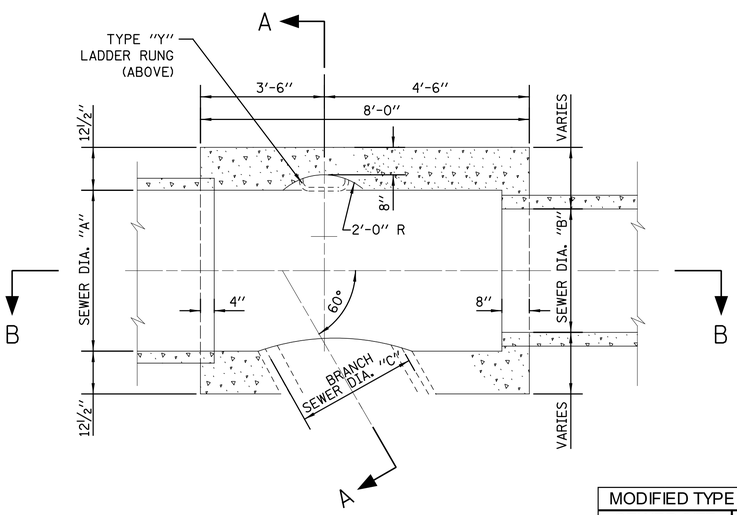

SECTIONAL PLAN

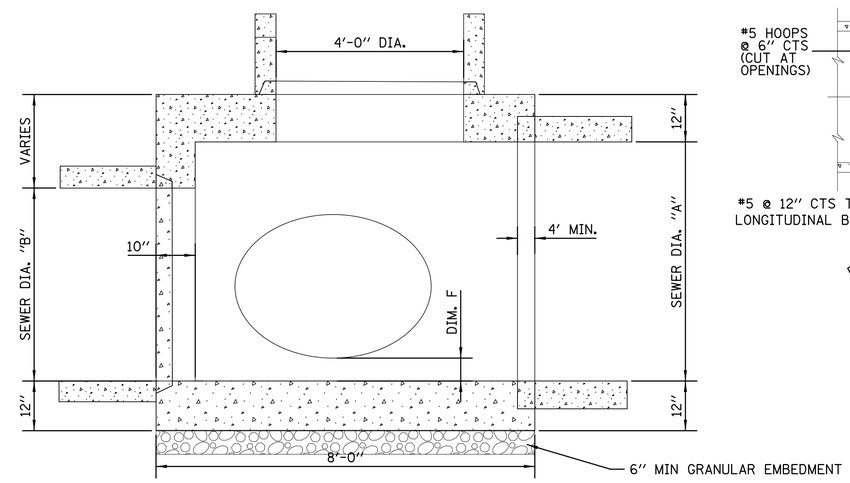

SECTION B-B

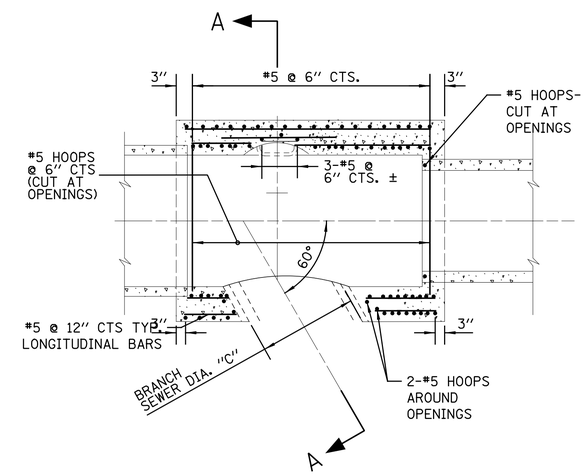

SECTIONAL PLAN

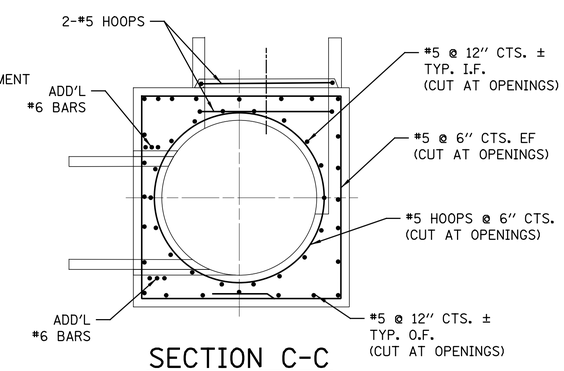

SECTION C-C

MODIFIED TYPE B MANHOLES		FOR 42", 36", & 30" BRANCHES				
SEWER SIZE		BRANCH SIZE	DIMENSION			
A	B	C	D	E	F	G
60	60	42	85	84	6	18
60	60	36	85	84	6	24
60	60	30	85	84	6	30
54	54	42	79	78	6	12
54	54	36	79	78	6	18
54	54	30	79	78	6	24
48	48	42	73	78	6	12
48	48	36	73	72	6	12
48	48	30	73	72	6	18
42	42	36	67	72	6	12
42	42	30	67	66	6	12
30	30	30	55	66	6	12

ALL MEASUREMENTS ARE IN INCHES

NOTE: WHEN B IS SMALLER THAN A, GAP SHALL BE FILLED WITH CONCRETE DURING CASTING.

SIMILAR REBAR DESIGN SHALL BE USE.

CONTRACTOR SHALL SUBMIT REBAR DETAILS FOR APPROVAL

IF BRANCH SEWER IS LESS THAN 36" DIA., ANGLE SHALL BE 45 DEGREES.

NOTES:

1. CONTRACTOR MUST SUBMIT SHOP DRAWINGS OF ALL PROPOSED MANHOLE CONFIGURATIONS FOR APPROVAL PRIOR TO SUBMISSION OF MATERIAL ORDERS.

2. CONNECTION BELLS MAY BE INSTALLED AT MANUFACTURER'S SITE, OR MORTARED IN PLACE IN THE FIELD. SEE SHEET A.11 FOR FURTHER CONFIGURATION DETAILS.

3. BASES MUST BE PRECAST WITH THE CORRECT NUMBER OF PIPE OPENINGS, CORRESPONDING TO THE REPRESENTATION IN THE PLAN AND PROFILE SHEETS.

4. PATCHING, BRICKING, OR OTHER MATERIAL METHODS OF CLOSING UNUSED HOLES WILL NOT BE ACCEPTED.

5. 6" MINIMUM GRANULAR EMBEDMENT UNDER ALL PRECAST MANHOLE BASES

STANDARD REVISIONS	
DATE	DESCRIPTION
1/5/15	REVISED

PERCENT COMPLETE	DATE
30	
60	
75	
90	
100	
BULLETIN	

CITY OF CHICAGO
DEPARTMENT OF WATER MANAGEMENT
BUREAU OF ENGINEERING SERVICES

MODIFIED TYPE "B" MANHOLE

DRAWN: SBW
DESIGNED: ___
CHECKED: GD, GC, SO
REVIEWED: ___

A.12

___ OF ___

PN _____

$FILE$
$DATE$

CDWM_Details.cel 8/5/2015 10:49:39 AM

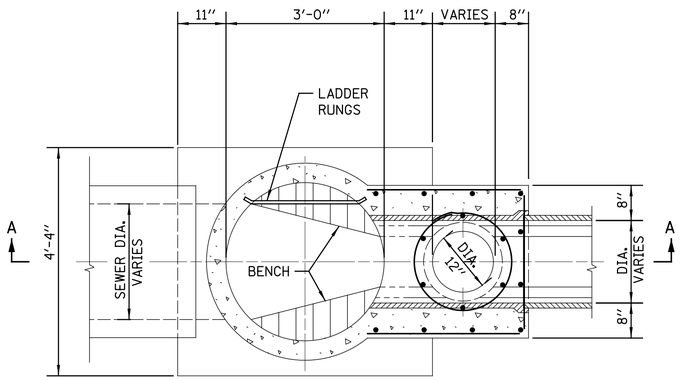

SECTIONAL PLAN-B

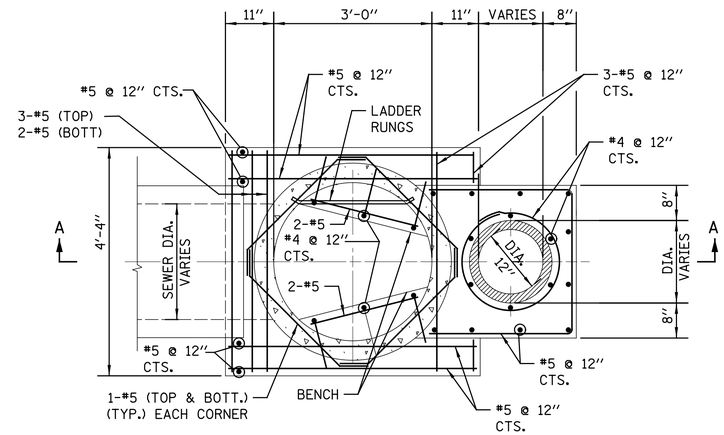

SECTIONAL PLAN-C

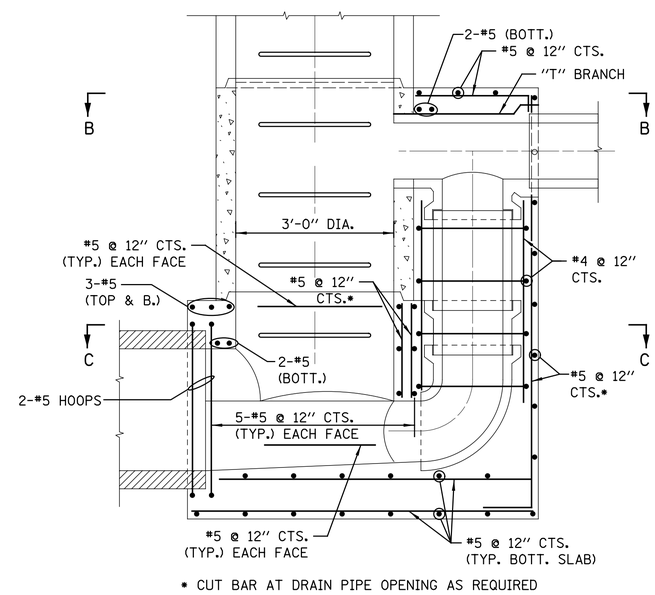

* CUT BAR AT DRAIN PIPE OPENING AS REQUIRED

SECTION A-A

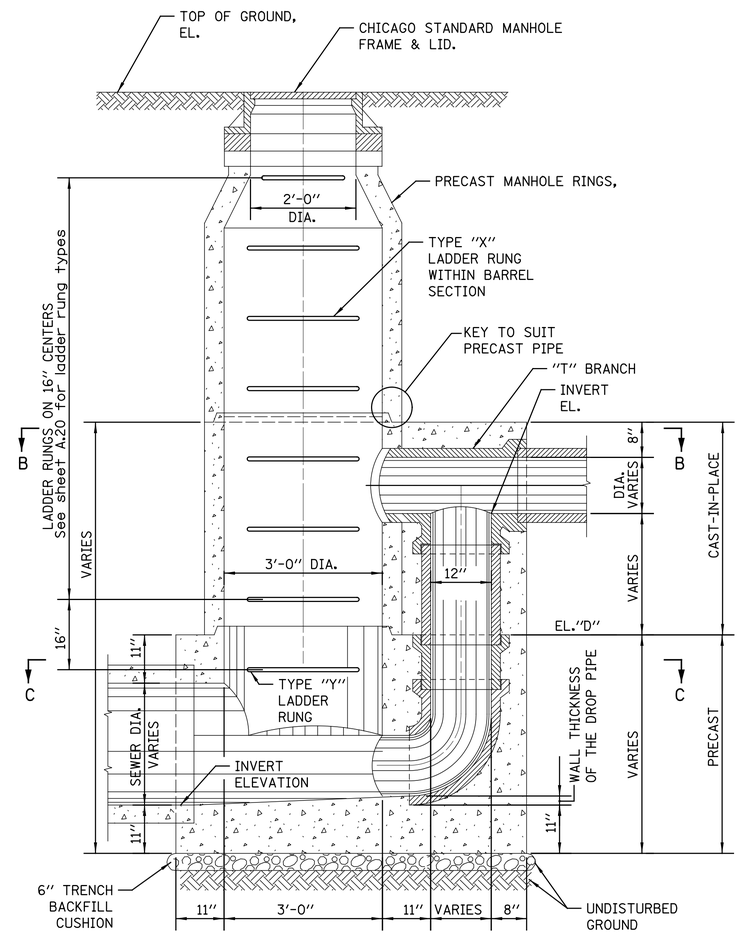

SECTION A-A

NOTE: FOR DESIGN ONLY- USE 12″ DROP PIPE
FOR THE FOLLOWING DEPTHS OF DWF:
6″ DWF-42″ LATERAL
7″ DWF-36″ LATERAL
8″ DWF-< 24″ LATERAL

FOR TRENCH BACKFILL, USE FA-6 SAND, CRUSHED CONCRETE SAND OR STONE SAND.

FOR GRANULAR EMBEDMENT, USE CA-11, CRUSHED GRAVEL, CRUSHED STONE, OR CRUSHED CONCRETE.

STANDARD REVISIONS	
DATE	DESCRIPTION
12/15/15	APPROVED

PERCENT COMPLETE	DATE
30	
60	
75	
90	
100	
BULLETIN	

CITY OF CHICAGO
DEPARTMENT OF WATER MANAGEMENT
BUREAU OF ENGINEERING SERVICES

TYPE C
SINGLE DROP MANHOLE

DRAWN: SBW
DESIGNED:
CHECKED:
REVIEWED:

A.13

____ OF ____

PN _____

$FILE$
$DATE$

CDWM_Details.cel 12/15/2015 12:16:31 PM

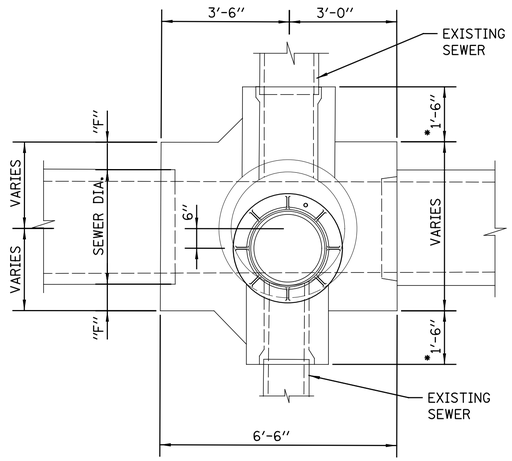

PLAN

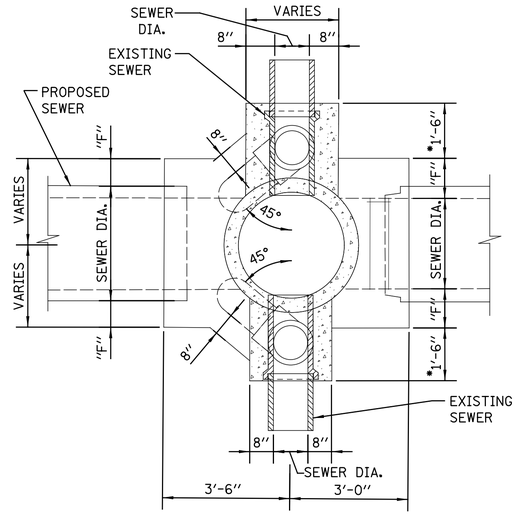

SECTIONAL PLAN

* 1'-8" FOR 24" DIA. SEWERS

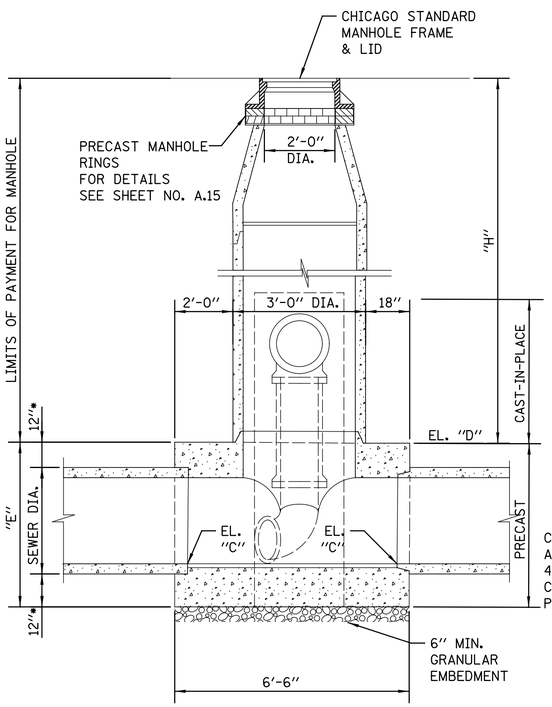

SECTION A-A

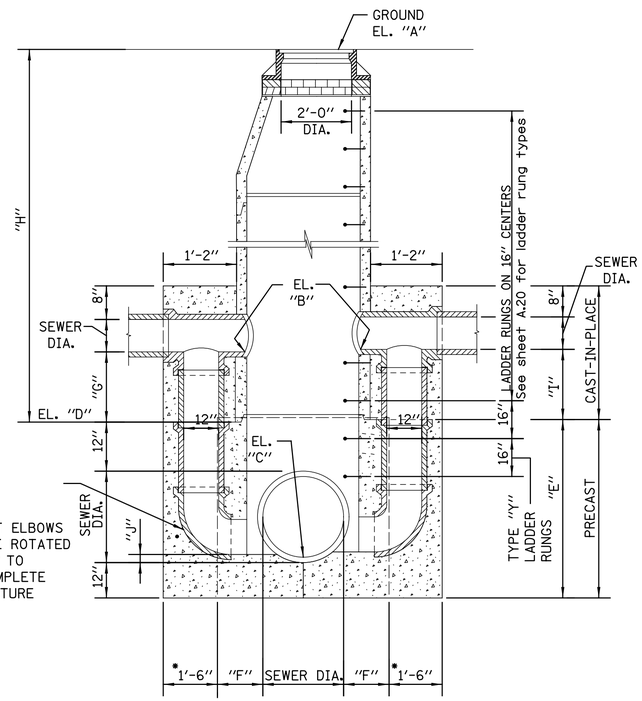

SECTION B-B

FOR CONCRETE PIPE SEWERS
24" DIA. TO 48" DIA.

LOCATION	SHEET NO.	MANHOLE BASE		ELEVATION					DIMENSIONS					
		DIA.	PART OF ITEM	DIA.	"A"	"B"	"C"	"D"	"E"	"F"	"G"	"H"	"I"	"J"

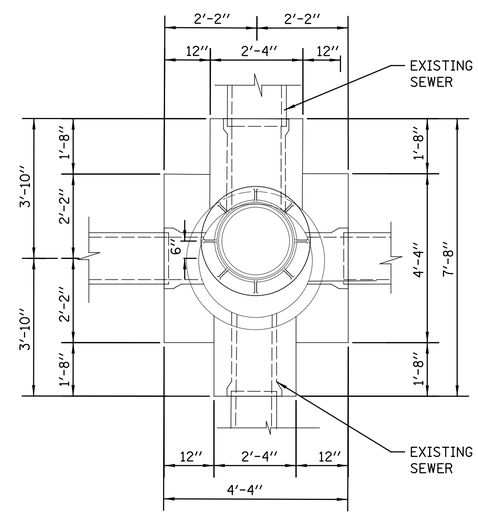

PLAN

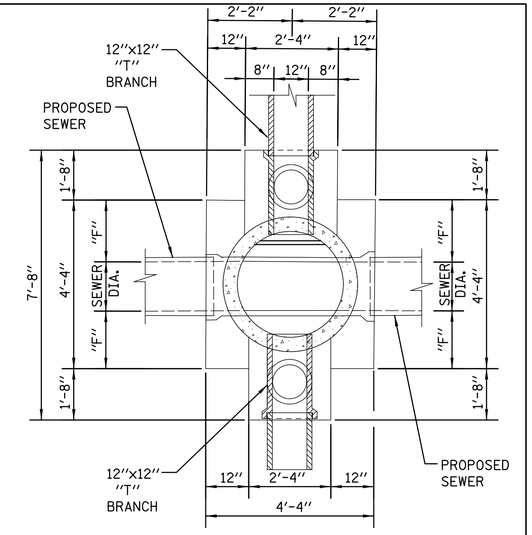

SECTIONAL PLAN

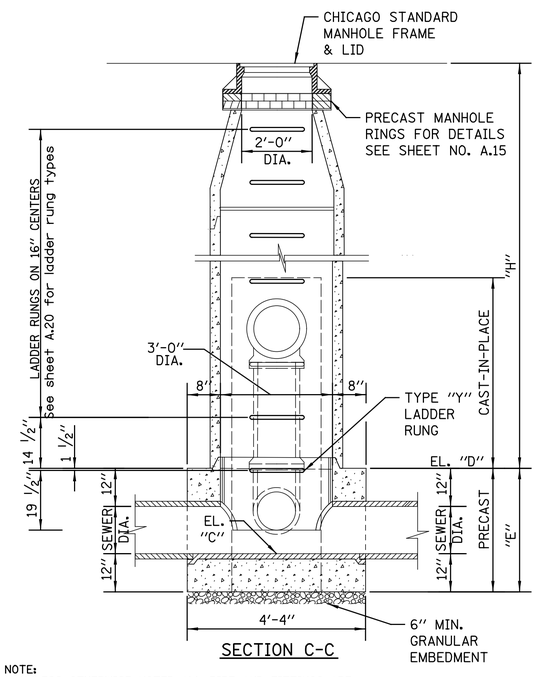

SECTION C-C

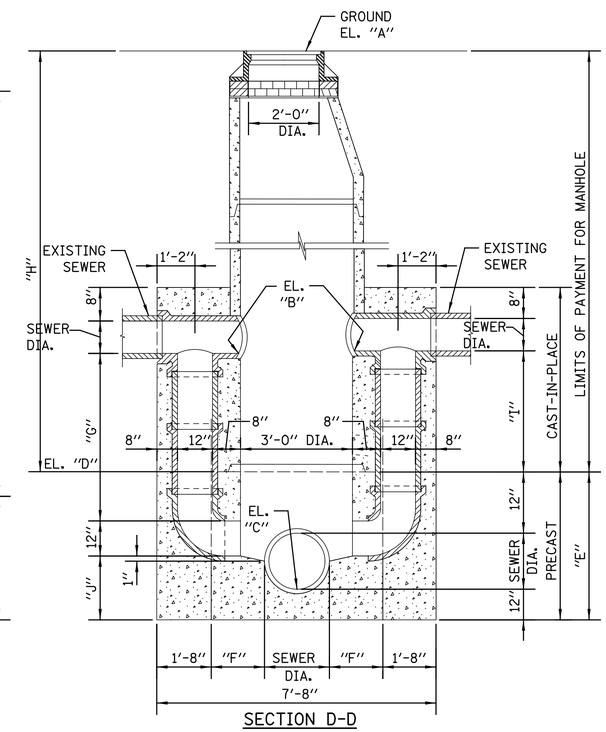

SECTION D-D

NOTE:
1. UNLESS OTHERWISE NOTED ALL PIPE AND FITTINGS ARE STANDARD STRENGTH VCP.

2. FOR DESIGN ONLY- USE 12" DROP PIPE FOR THE FOLLOWING DEPTHS OF DWF:
6" DWF-42" LATERAL
7" DWF-36" LATERAL
8" DWF-< 24" LATERAL

3. FOR TRENCH BACKFILL, USE FA-6 SAND, CRUSHED CONCRETE SAND OR STONE SAND.

4. FOR GRANULAR EMBEDMENT, USE CA-11, CRUSHED GRAVEL, CRUSHED STONE, OR CRUSHED CONCRETE.

FOR VITRIFIED CLAY PIPE SEWERS
21" DIA. & SMALLER

STANDARD REVISIONS	
DATE	DESCRIPTION
12/15/15	APPROVED

PERCENT COMPLETE	DATE
30	
60	
75	
90	
100	
BULLETIN	

CITY OF CHICAGO
DEPARTMENT OF WATER MANAGEMENT
BUREAU OF ENGINEERING SERVICES

TYPE C
DOUBLE DROP MANHOLE

DRAWN: SBW
DESIGNED:
CHECKED:
REVIEWED:

A.14

___ OF ___

PN _____

$FILE$
$DATE$

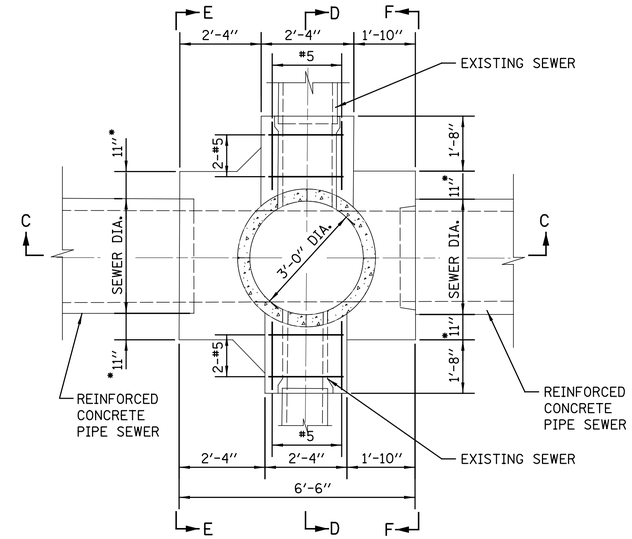

NOTE: * 13" FOR 24" SEWER

PLAN

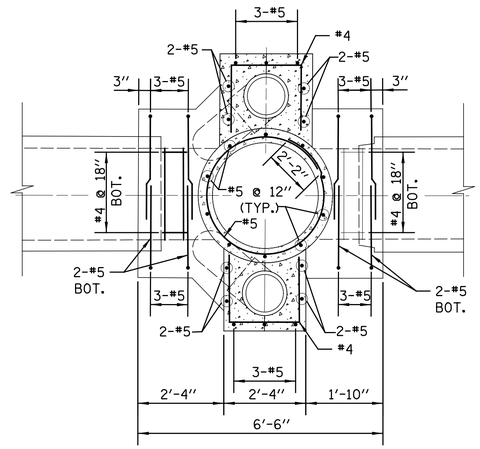

SECTION A-A

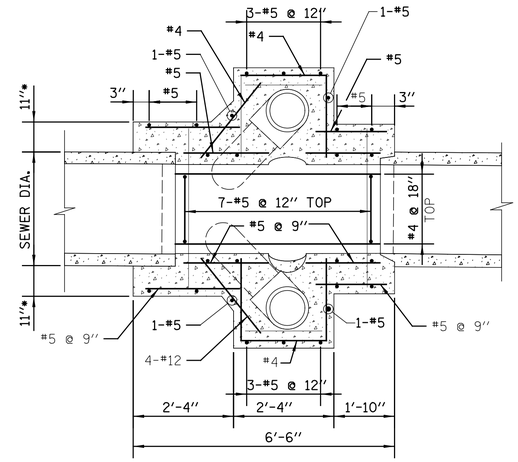

SECTION B-B

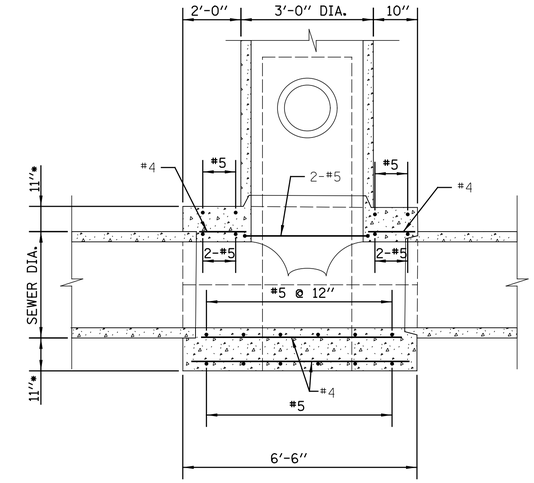

SECTION C-C

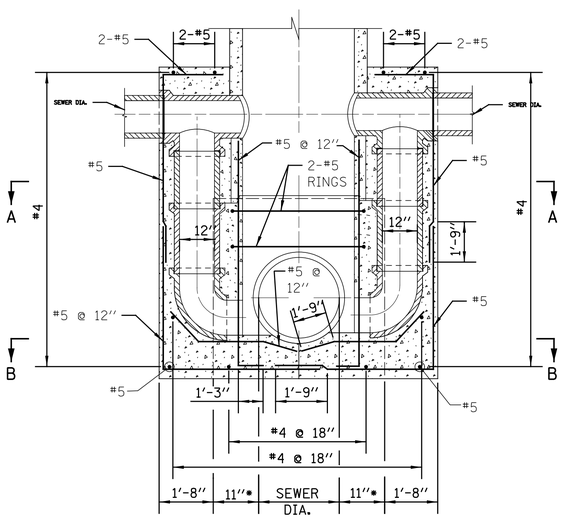

SECTION D-D

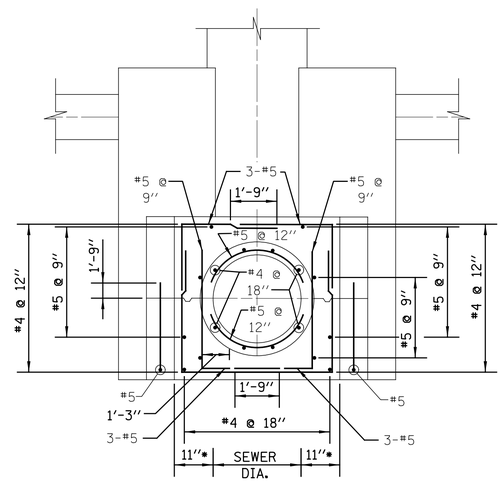

ELEVATION E-E

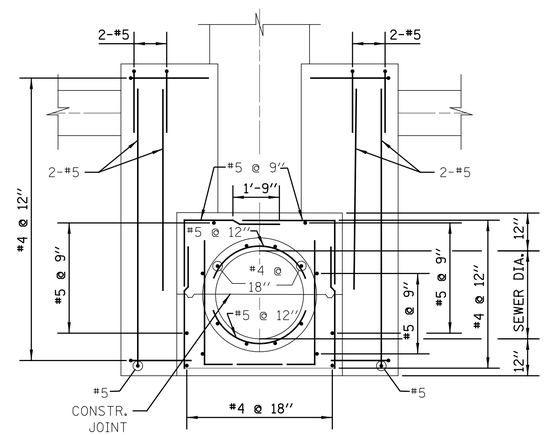

ELEVATION F-F

NOTE: FOR DESIGN ONLY- USE 12" DROP PIPE FOR THE FOLLOWING DEPTHS OF DWF:
6" DWF-42" LATERAL
7" DWF-36" LATERAL
8" DWF-< 24" LATERAL

FOR TRENCH BACKFILL, USE FA-6 SAND, CRUSHED CONCRETE SAND OR STONE SAND.

FOR GRANULAR EMBEDMENT, USE CA-11, CRUSHED GRAVEL, CRUSHED STONE, OR CRUSHED CONCRETE.

FOR CONCRETE PIPE SEWERS
24" DIA. TO 48" DIA.

STANDARD REVISIONS	
DATE	DESCRIPTION
2/24/15	APPROVED

PERCENT COMPLETE	DATE
30	
60	
75	
90	
100	
BULLETIN	

CITY OF CHICAGO
DEPARTMENT OF WATER MANAGEMENT
BUREAU OF ENGINEERING SERVICES

BASES FOR TYPE C DROP MANHOLE

DRAWN: SBW
DESIGNED:
CHECKED:
REVIEWED:

A.15

____ OF ____

PN _____

$FILE$
$DATE$

CDWM_Details.cel 8/5/2015 10:53:14 AM

PRECAST COMPONENT TABLE							
BASE TEE				WALL THICKNESS	CAP & BASE		LADDER RUNG LENGTH
A	B	C*	D	F	C	E	G
60	60	84	12	8	84	48	48.5
54	54	84	12	7 1/2	78	42	46.5
48	48	72	12	7	72	36	44
42	42	60	9	6	60	24	40
36	36	60	12	6	60	24	40
30	30	48	9	5	48	12	35
24	24	48	12	5	48	12	35
NOTE: ALL MEASUREMENTS ARE IN INCHES							
*DIAMETERS >84" UP TO 144" ARE AVAILABLE IN 1' INCREMENTS							

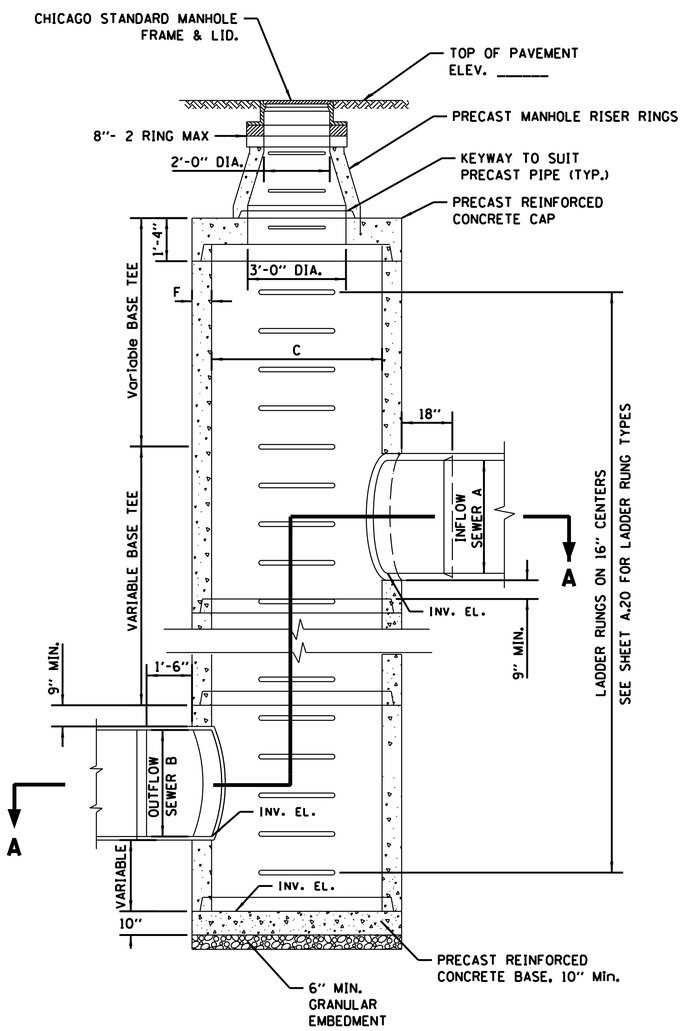

SECTION B-B
SCALE: N.T.S.

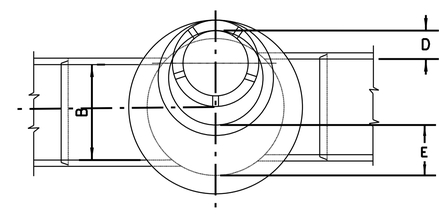

PLAN

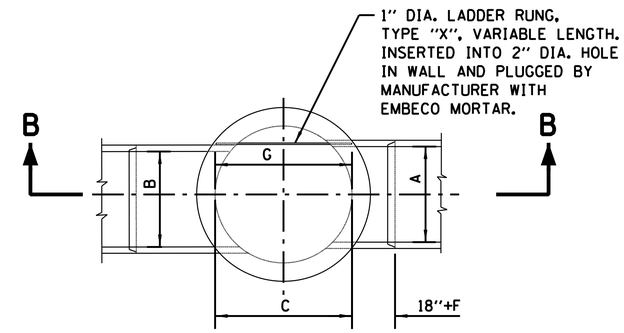

SECTIONAL PLAN A-A

OPTION: W/O BEND

SCALE: N.T.S.

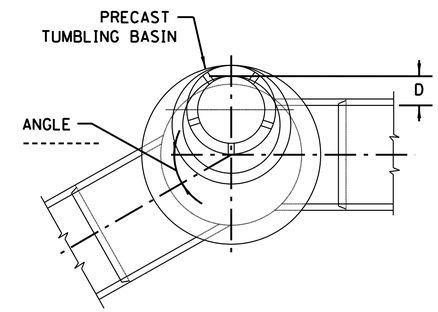

PLAN

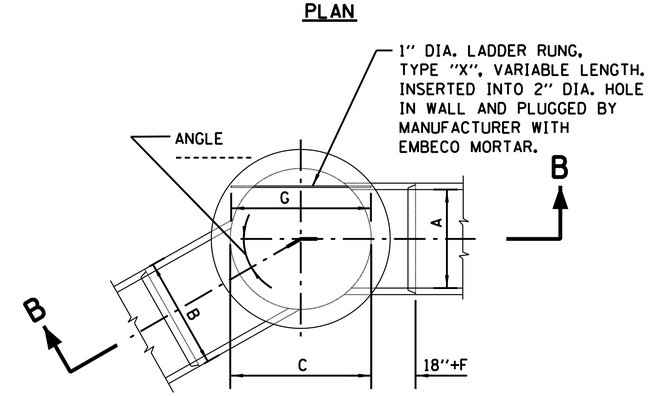

SECTIONAL PLAN A-A

OPTION: WITH BEND

SCALE: N.T.S.

NOTES:

1. FOR CONTRACTOR'S RESPONSIBILITY REGARDING STRUCTURAL DRAWING, SEE SPECIFICATIONS, BOOK 3.
2. PRECAST PIPE AND FITTINGS MUST CONFORM TO A.S.T.M. DESIGNATION C 76; OR "REINFORCED CONCRETE CULVERT STORM DRAIN AND SEWER PIPE" TABLE IV, WALL B OR C;
3. FOR ADDITIONAL INFORMATION, SEE SPECIFICATIONS, BOOK 3.

STANDARD REVISIONS	
DATE	DESCRIPTION
2/25/15	Approved Plan

PERCENT COMPLETE	DATE
30	
60	
75	
90	
100	
BULLETIN	

CITY OF CHICAGO
DEPARTMENT OF WATER MANAGEMENT
BUREAU OF ENGINEERING SERVICES

PRECAST TUMBLING BASIN DETAILS

DRAWN: SOH
DESIGNED:
CHECKED:
REVIEWED:

A.16

___ OF ___

PN _____

$FILE$
$DATE$

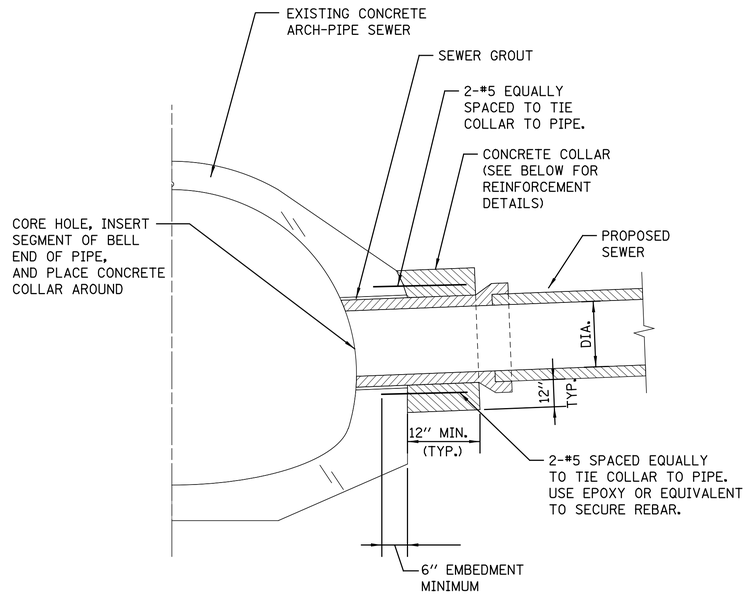

EXAMPLE TYPICAL CONNECTION DETAIL

(NOT TO SCALE)

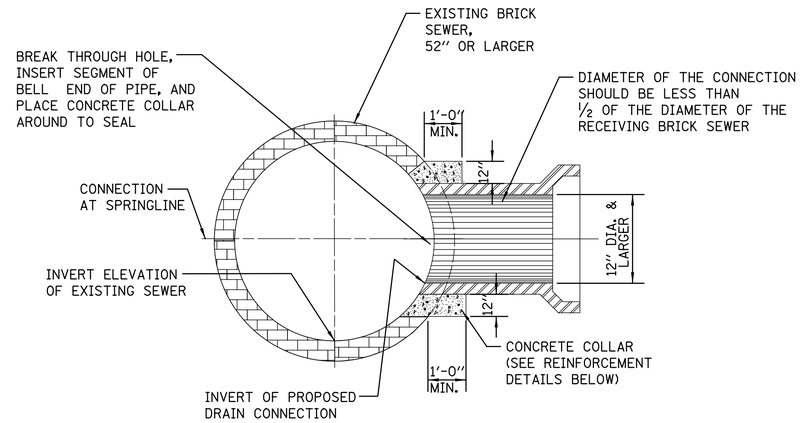

EXAMPLE TYPICAL BRICK SEWER CONNECTION FOR CONNECTING PIPE SIZES GREATER THAN 12'' DIA.

(NOT TO SCALE)

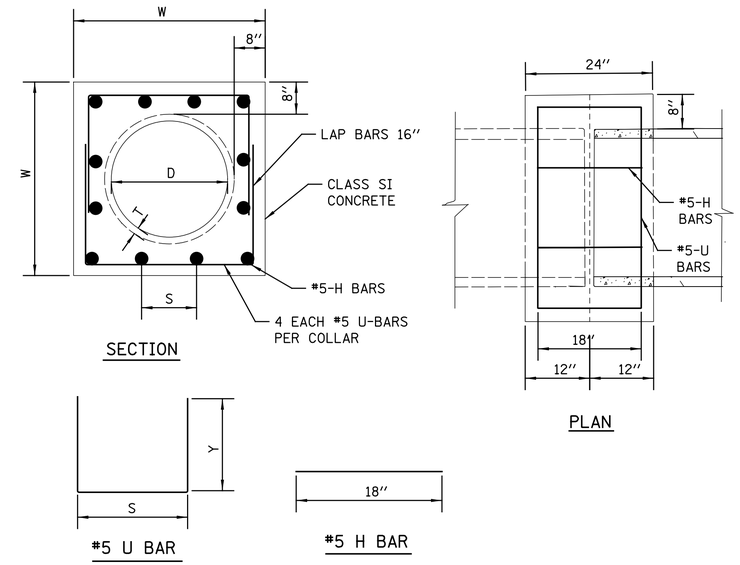

PIPE TO PIPE REINFORCED CONCRETE COLLAR DETAIL

SCALE: N.T.S.

CONRETE COLLAR NOTES:

1. ALL ITEMS AND MATERIALS SHALL CONFORM TO THE LATEST IDOT SSRBC SPECIFICATIONS, UNLESS OTHERWISE NOTED IN SUPPLEMENTAL SPECIFICATIONS FOR THE SPECIFIC PROJECT BEING CONSTRUCTED.
2. ALL CONCRETE SHALL CONFORM TO IDOT SSRBC ARTICLE 1020.04, CLASS SI, WITH A COMPRESSIVE STRENGTH OF 3500 PSI.
3. ALL EPOXY COATED REINFORCEMENT BARS SHALL CONFORM TO IDOT SSRBC SECTION 508, AND ARTICLE 1006.10.
4. UNLESS OTHERWISE SHOWN, THE COVER FOR REINFORCING STEEL SHALL BE AS FOLLOWS: A.) CONCRETE CAST AGAINST PERMANENTLY EXPOSE EARTH: 3'' B.) ALL OTHER REINFORCING BARS: 2''
5. CONCRETE COLLARS SHALL BE USED AT ALL EXISTING/PROPOSED PIPE CONNECTIONS. TRIM EXISTING PIPE END TO PROVIDE FLUSH BUTT JOINT, INSTALL REBAR, AND PLACE CONCRETE COLLAR.
6. THE CONTRACTOR SHALL PROVIDE ALL MEASURES AND PRECAUTIONS NECESSARY TO PREVENT DAMAGE TO THE EXISTING SEWER DURING CONSTRUCTION. CONTRACTOR SHALL ADEQUATELY BRACE OR SHORE EXISTING SEWER IF REQUIRED TO MAINTAIN INTEGRITY OF SEWER DURING CONSTRUCTION. SUBMIT DESIGN AND DETAILS, SEALED AND SIGNED BY AN ILLINOIS LICENSED STRUCTURAL ENGINEER, SHOWING TEMPORARY BRACING FOR THE EXISTING SEWER DURING CONSTRUCTION FOR REVIEW PRIOR TO CONSTRUCTION. ANY DAMAGE TO EXISTING STRUCTURE IS RESPONSIBILITY OF THE CONTRACTOR.
7. CONTRACTOR SHALL DIVERT ALL FLOW FROM THE EXISTING SEWER PRIOR TO CONSTRUCTION SO THAT THE WORK CAN BE PERFORMED IN THE DRY CONDITION. SEWER MUST BE MAINTAINED IN SERVICE AT ALL TIMES. SUBMIT MEANS OF FLOW DIVERSION FOR REVIEW PRIOR BREAKING INTO EXISTING BRICK SEWER. ALL EXCAVATION SHALL BE KEPT DEWATERED DURING CONSTRUCTION OPERATIONS UNTIL BACKFILL IN PLACE. PROVISIONS SHALL BE MADE TO PREVENT THE BOTTOM OF ALL EXCAVATIONS FROM FREEZING OR FLOODING AT ALL TIMES. PLAN DIMENSIONS AND DETAILS RELATIVE TO EXISTING STRUCTURE SHALL BE SUBJECT TO NOMINAL CONSTRUCTION VARIATIONS. IT SHALL BE CONTRACTOR'S RESPONSIBILITY TO VERIFY SUCH DIMENSIONS AND DETAILS IN THE FIELD AND MAKE NECESSARY APPROVED ADJUSTMENTS PRIOR TO CONSTRUCTION OR ORDERING MATERIALS. SUCH VARIATIONS SHALL NOT BE CAUSE FOR ADDITIONAL COMPENSATION FOR A CHANGE IN THE SCOPE OF THE WORK, HOWEVER, CONTRACTOR WILL BE PAID FOR THE QUANTITY ACTUALLY FURNISHED AT THE UNIT PRICE OF THE WORK.

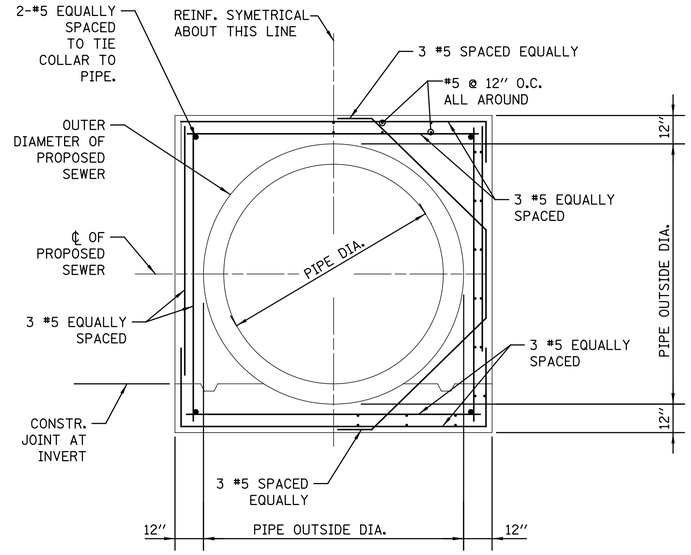

EXAMPLE CONCRETE COLLAR REINFORCEMENT - SECTION

(NOT TO SCALE)

			U BAR				H BAR				
D	T	W				TOTAL			TOTAL	CLASS SI	
RCP DIA.	PIPE THICKNESS	WIDTH	X	Y	QTY	LENGTH	S	QTY	LENGTH	CONCRETE	#5 EPOXY REBAR
(IN)	(IN)	(IN)	(IN)	(IN)	(EACH)	(FT)	(IN)	(EACH)	(FT)	(CU YD)	(LBS)
12*	2.00	32.0	26.00	21.00	4	22.7	8 1/8	12.0	18.0	0.42	42.5
15*	2.25	35.5	29.50	22.75	4	25.0	9 3/8	12.0	18.0	0.49	44.8
18*	2.50	39.0	33.00	24.50	4	27.3	10 1/2	12.0	18.0	0.57	47.2
21*	2.75	42.5	36.50	26.25	4	29.7	8 3/4	16.0	24.0	0.65	56.0
24	3.00	46.0	40.00	28.00	4	32.0	9 5/8	16.0	24.0	0.72	58.4
27	3.25	49.5	43.50	29.75	4	34.3	10 1/2	16.0	24.0	0.81	60.8
30	3.50	53.0	47.00	31.50	4	36.7	11 3/8	16.0	24.0	0.89	63.3
33	3.75	56.5	50.50	33.25	4	39.0	9 4/5	20.0	30.0	0.98	72.0
36	4.00	60.0	54.00	35.00	4	41.3	10 1/2	20.0	30.0	1.07	74.4
42	4.50	67.0	61.00	38.50	4	46.0	9 7/8	24.0	36.0	1.26	85.5
48	5.00	74.0	68.00	42.00	4	50.7	11 1/8	24.0	36.0	1.46	90.4

*NOTE: OPTION TO USE WITHOUT REBAR

STANDARD REVISIONS	
DATE	DESCRIPTION
1/22/14	APPROVED PLAN

PERCENT COMPLETE	DATE
30	
60	
75	
90	
100	
BULLETIN	

CITY OF CHICAGO
DEPARTMENT OF WATER MANAGEMENT
BUREAU OF ENGINEERING SERVICES

CONCRETE COLLAR / CONNECTION DETAILS

DRAWN: SBW
DESIGNED:
CHECKED:
REVIEWED:

A.17

____ OF ____

PN _____

$FILE$
$DATE$

CDWM_Details.cel 8/5/2015 11:04:19 AM

STANDARD DRAINAGE STRUCTURES FOR PUBLIC STREETS

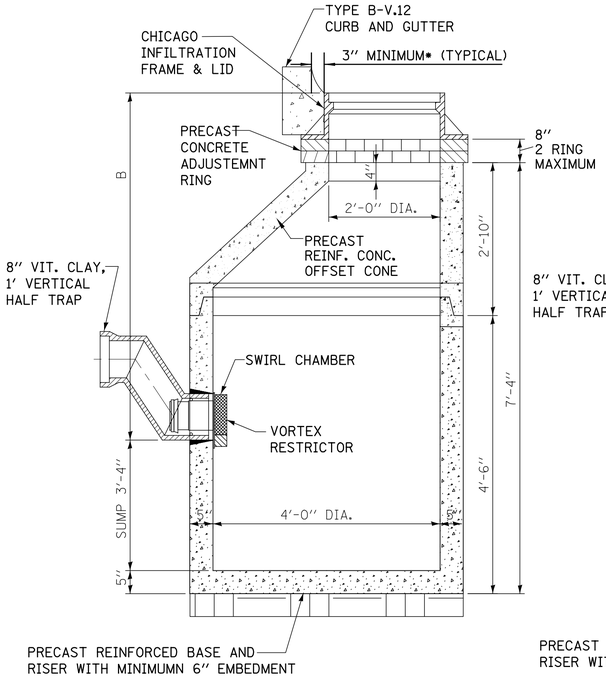

STANDARD CATCH BASIN-4' DIA.

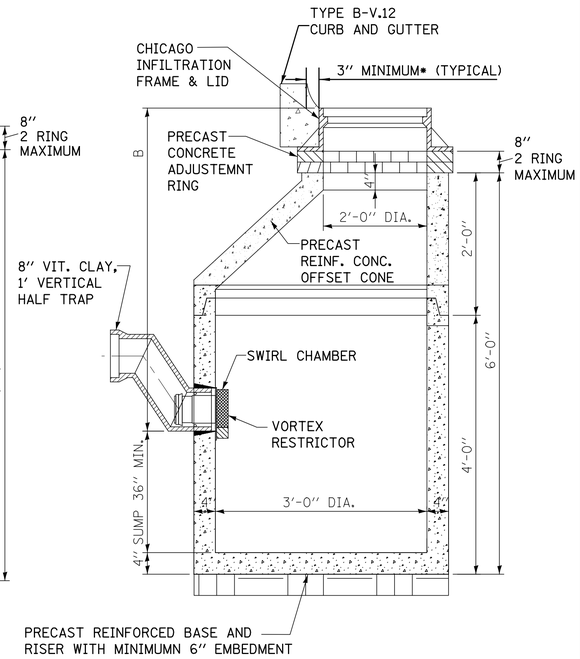

STANDARD CATCH BASIN-3' DIA.

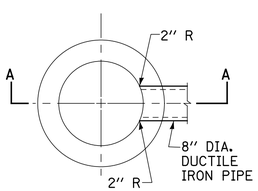

PLAN

(FRAME & LID NOT SHOWN)

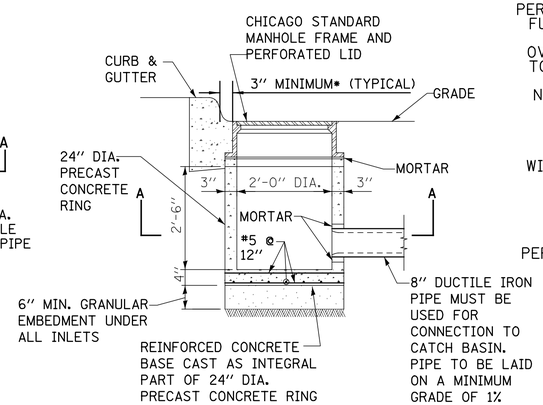

STANDARD INLET-2' DIA.

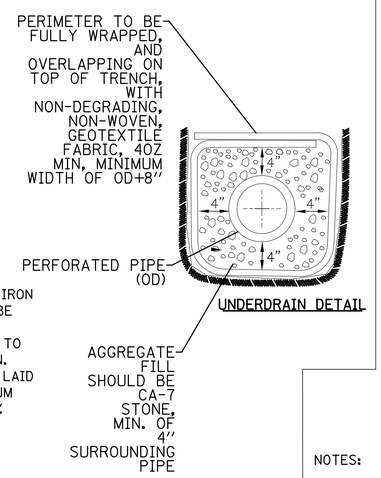

UNDERDRAIN DETAIL

*OUTER EDGE OF FRAME
TO FACE OF CURB

NOTE:
INLETS AND 3' DIAMETER CATCH BASINS ARE TO BE USED ONLY WITH PRIOR APPROVAL OF DWM SEWER ENGINEER OR FIELD INSPECTOR.

FOR TRENCH BACKFILL, USE FA-6 SAND, CRUSHED CONCRETE SAND, OR STONE SAND.

FOR GRANULAR EMBEDMENT, USE CA-11, CRUSHED GRAVEL, CRUSHED STONE, OR CRUSHED CONCRETE.

STANDARD DRAINAGE STRUCTURES FOR PUBLIC ALLEYS

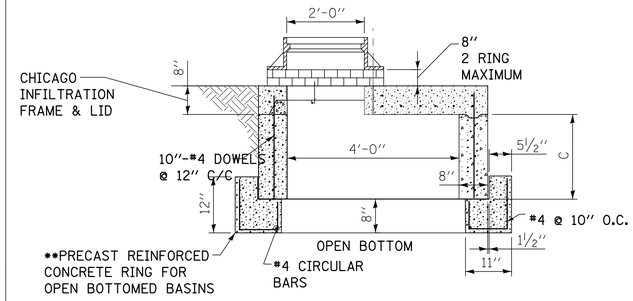

GREEN ALLEY OPEN BOTTOM CATCH BASIN

TO BE USED IF STANDARD CONE WITH REQUIRED SUMP DEPTH INSTALLATION IS IMPOSSIBLE.

**IF FLAT TOP SLAB CATCH BASIN IS USED IN AN OPEN BOTTOM APPLICATION, THE FOLLOWING CRITERIA MUST BE FOLLOWED:

-''C'' MUST BE A MINIMUM OF 3 FEET.

- PROVIDE A MINIMUM AGGREGATE BASE OF 1.0 FEET BELOW PRECAST REINFORCED CONCRETE RING.

-GEOTECH FABRIC MUST BE PLACED ON SIDES AND BOTTOM OF AGGREGATE SURROUNDING BASIN.

-AGGREGATE BASE MUST PROVIDE ADEQUATE STORMWATER STORAGE CAPACITY PER THE APPROVED/PERMITTED PLANS.

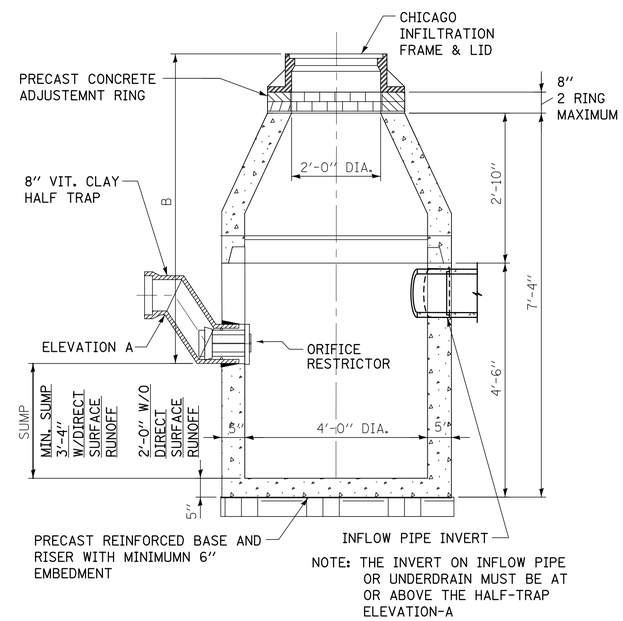

NOTE: THE INVERT ON INFLOW PIPE OR UNDERDRAIN MUST BE AT OR ABOVE THE HALF-TRAP ELEVATION-A

CATCH BASIN-ORIFICE RESTRICTOR

N.T.S.

NOTES:

1. FOR ANY DRAIN TILE CONNECTION, THE WATER TABLE MUST BE AT LEAST 3.5 FEET BELOW ELEVATION A.

2. PVC UNDERDRAINS MUST BE 4'' MINIUMUM DIAMETER, (6'' RECOMMENDED) AND MUST BE WRAPPED IN GEOTECH FABRIC.

DRAINAGE STRUCTURES RESTRICTORS

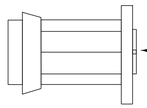

ORIFICE RESTRICTOR

INSERT THE RESTRICTOR INTO THE HALF-TRAP. UPON TIGHTENING OF THE CENTER NUT ON THE FACE OF THE RESTRICTOR, THE RUBBER O-RINGS WILL EXPAND INSIDE THE HALF TRAP, PROVIDING A WATER- TIGHT SEAL. PULL ON RESTRICTOR TO VERIFY THAT A TIGHT FIT IS MADE.

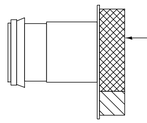

VORTEX RESTRICTOR

PULL ON RESTRICTOR TO VERIFY THAT A TIGHT FIT IS MADE.

INSERT THE RESTRICTOR WITH THE OPENING DOWN. UPON TIGHTENING OF THE 2 BOLTS ON THE FACE OF THE RESTRICTOR, THE RUBBER O-RINGS WILL PROVIDE A WATER- TIGHT SEAL.

GENERAL NOTES:

1. CATCH BASIN TO CATCH BASIN CONNECTIONS ARE ALLOWED IN PRIVATE SITES & ALLEYS. ONLY THE DOWNSTREAM CATCH BASIN IS REQUIRED TO HAVE A HALF-TRAP.

2. IF B < 4 FEET, THEN USE A DUCTILE IRON PIPE HALF TRAP AND FLAT TOP SLAB CATCH BASIN AS NECESSARY.

3. INLETS AND 3' DIAMETER CATCH BASINS ARE TO BE USED ONLY
WITH PRIOR APPROVAL OF DWM FIELD INSPECTOR.

RESTRICTOR NOTES:

THE DWM'S RAIN BLOCKER RESTRICTOR PROGRAM MUST BE MAINTAINED WITH ANY ROADWAY IMPROVEMENT.

THE DESIGN OF ANY ROADWAY IMPROVEMENT MUST CONSIDER LIMITING THE NUMBER OF CATCH BASINS TO THE EXTENT PRACTICAL. THE NUMBER OF EXISTING STRUCTURES SHOULD NOT BE INCREASED.

THE RESTRICTORS CAN BE OBTAINED FROM DWM CENTRAL DISTRICT AT 3901 S. ASHLAND AVE. THE CONTRACTOR SHOULD ARRANGE FOR PICK UP BY CONTACTING 312-747-1177 (7AM TO 3PM, M-F)

FLOW RESTRICTORS MUST BE INSTALLED IN ALL CATCH BASINS OUTSIDE OF THE CENTRAL BUSINESS DISTRICT. RESTRICTORS MUST NOT BE INSTALLED IN CATCH BASINS IN CLOSE PROXIMITY TO VIADUCT AREAS, BUS STOPS, OR EMERGENCY ENTRANCES. THE DWM MUST APPROVE THE NON-INSTALLATION OR REMOVAL OF ANY RESTRICTOR. REQUIREMENTS FOR RESTRICTOR INSTALLATION ARE AS FOLLOWS:

*ARTERIAL STREETS: 3-INCH ORIFICE RESTRICTOR
*BUS ROUTES: 3-INCH ORIFICE RESTRICTOR
*RESIDENTIAL STREETS: 3-INCH VORTEX RESTRICTOR
*ALLEYS: 3-INCH ORIFICE RESTRICTOR IN THE LAST CB.
*CLOSED LIDS ARE REQUIRED ON ALL MANHOLES EXCEPT AT INTERSECTIONS WHERE A PERFORATED LID SHALL BE USED.

STANDARD REVISIONS	
DATE	DESCRIPTION
12/28/15	APPROVED

PERCENT COMPLETE	DATE
30	
60	
75	
90	
100	
BULLETIN	

CITY OF CHICAGO
DEPARTMENT OF WATER MANAGEMENT
BUREAU OF ENGINEERING SERVICES

DRAINAGE STRUCTURE DETAILS

DRAWN: SBW
DESIGNED:
CHECKED:
REVIEWED:

A.18

OF

PN

$FILE$
$DATE$

CDWM_Details.cel 12/28/2015 10:21:06 AM

STANDARD DRAINAGE STRUCTURES FOR PRIVATE DEVELOPMENT

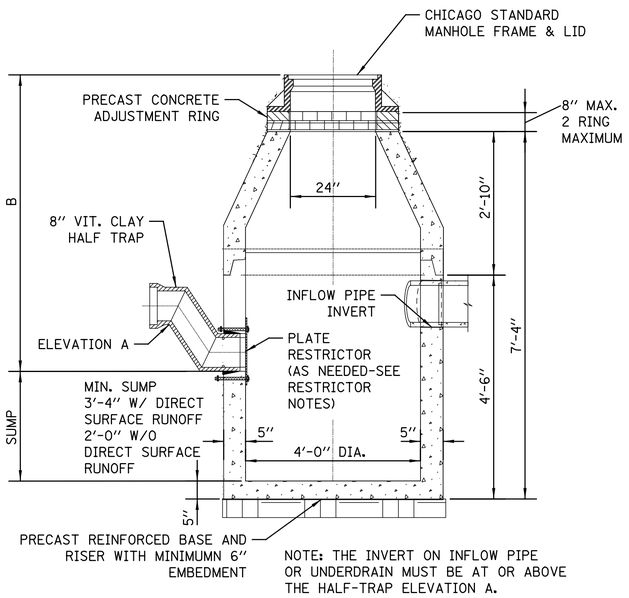

PLATE RESTRICTOR CATCH BASIN
CONICAL SECTION
N.T.S.

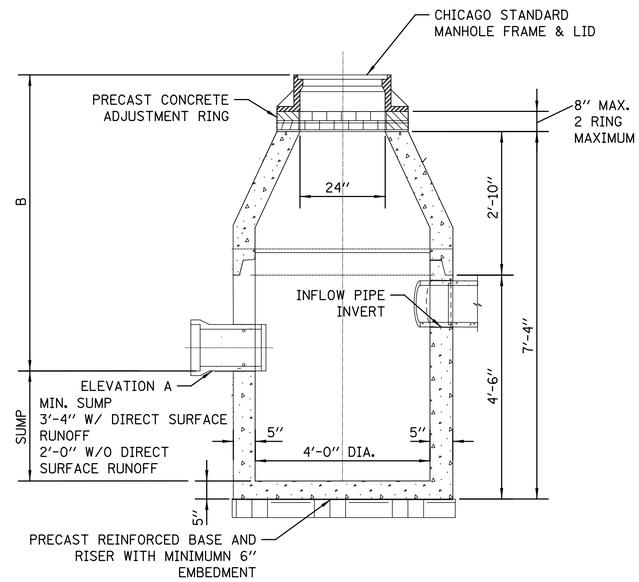

STANDARD CATCH BASIN
CONICAL SECTION
N.T.S.

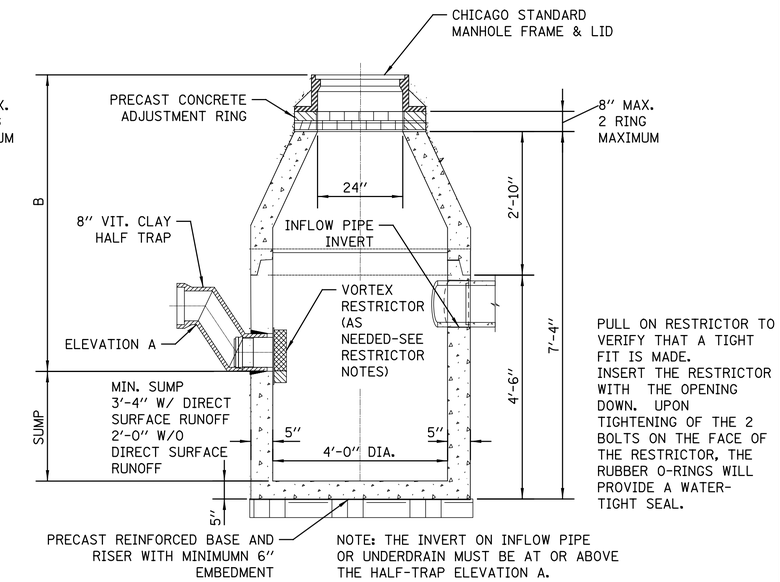

VORTEX RESTRICTOR CATCH BASIN
CONICAL SECTION
N.T.S.

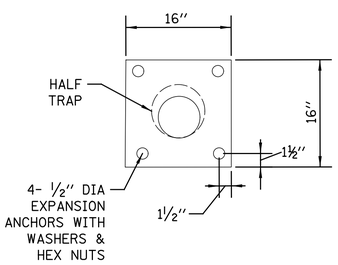

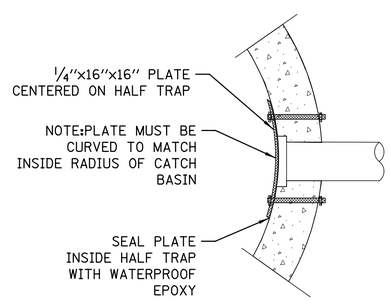

NOTES:

1. THE RESTRICTOR MUST BE INSTALLED IN CATCH BASINS OR MANHOLES WITH 2' MIN. SUMPS.

2. PLATE AND FASTENERS MUST BE FABRICATED IN STAINLESS STEEL, DUCTILE IRON, OR EQUIVALENT WATERPROOF/WEATHER PROOF MATERIALS.

3. MIN. ORIFICE SIZE= 2.5" DIA.

4. IF B< 4 FEET, THEN USE A FLAT TOP SLAB CATCH BASIN AS NECESSARY.

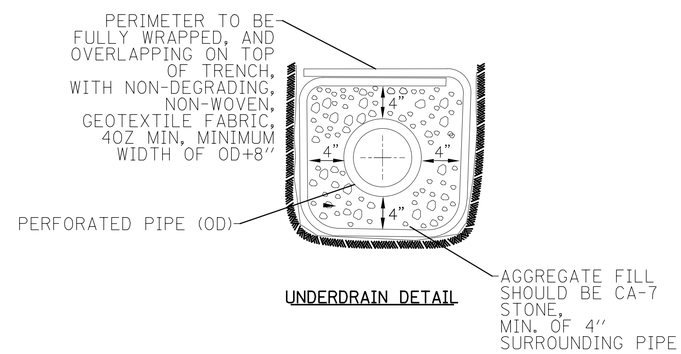

UNDERDRAIN DETAIL

GENERAL NOTES:

1. CATCH BASIN TO CATCH BASIN CONNECTIONS ARE ALLOWED IN PRIVATE SITES & ALLEYS. ONLY THE DOWNSTREAM CATCH BASIN IS REQUIRED TO HAVE A HALF-TRAP.

2. IF B < 4 FEET, THEN USE A FLAT TOP SLAB CATCH BASIN AS NECESSARY.

3. FOR TRENCH BACKFILL, USE FA-6 SAND, CRUSHED CONCRETE SAND, OR STONE SAND.

4. FOR GRANULAR EMBEDMENT, USE CA-11, CRUSHED GRAVEL, CRUSHED STONE, OR CRUSHED CONCRETE.

5. INLETS AND 3' DIAMETER CATCH BASINS ARE TO BE USED ONLY WITH PRIOR APPROVAL OF THE DEPT OF WATER MANAGEMENT- ENGINEERING SERVICES, SEWER SECTION, AND THE DEPT. OF BUILDINGS STORMWATER REVIEWER.

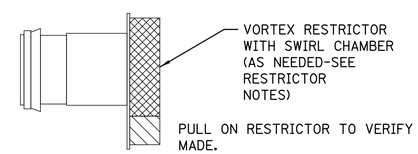

PULL ON RESTRICTOR TO VERIFY THAT A TIGHT FIT IS MADE.

INSERT THE RESTRICTOR WITH THE OPENING DOWN. UPON TIGHTENING OF THE 2 BOLTS ON THE FACE OF THE RESTRICTOR, THE RUBBER O-RINGS WILL PROVIDE A WATER- TIGHT SEAL.

NOTES:

1. IF B < 4 FEET, THEN USE A FLAT TOP SLAB CATCH BASIN AS NECESSARY.

2. THE RESTRICTORS CAN BE OBTAINED FROM DWM CENTRAL DISTRICT AT 3901 S. ASHLAND AVE. THE CONTRACTOR SHOULD ARRANGE FOR PICK UP BY CONTACTING 312-747-1177 (7AM TO 3PM, M-F)

STANDARD REVISIONS	
DATE	DESCRIPTION
2/24/15	APPROVED PLAN

PERCENT COMPLETE	DATE
30	
60	
75	
90	
100	
BULLETIN	

CITY OF CHICAGO
DEPARTMENT OF WATER MANAGEMENT
BUREAU OF ENGINEERING SERVICES

DRAINAGE STRUCTURE DETAILS
PRIVATE DEVELOPMENT

DRAWN: SBW
DESIGNED:
CHECKED:
REVIEWED:

A.19

___ OF ___

PN _____

$FILE$
$DATE$

CDWM_Details.cel 8/5/2015 11:53:45 AM

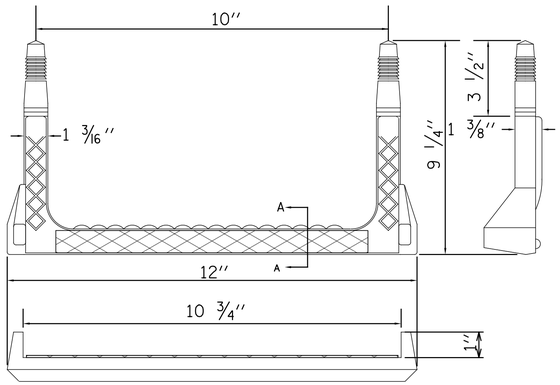

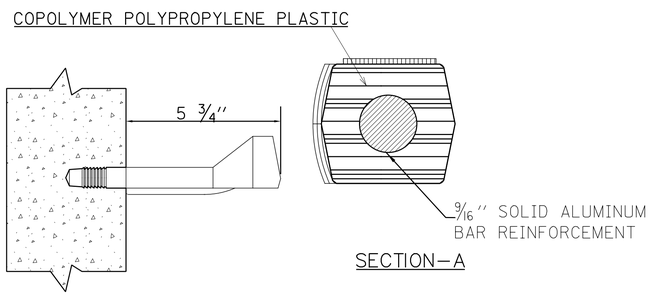

RECTANGULAR STEP LADDER RUNG

FOR USE ONLY IN 48'' DIAMETER
AND LARGER MANHOLES.

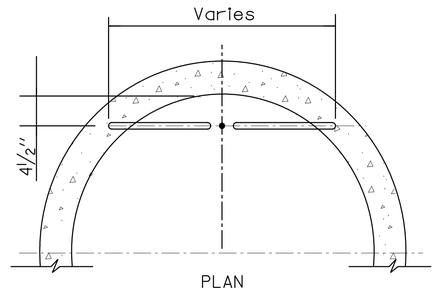

PLAN

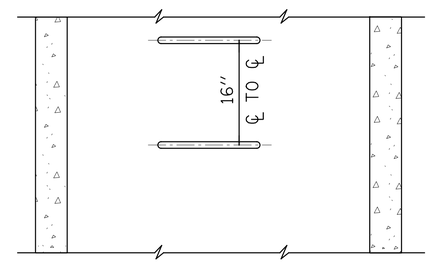

ELEVATION

TYPE X

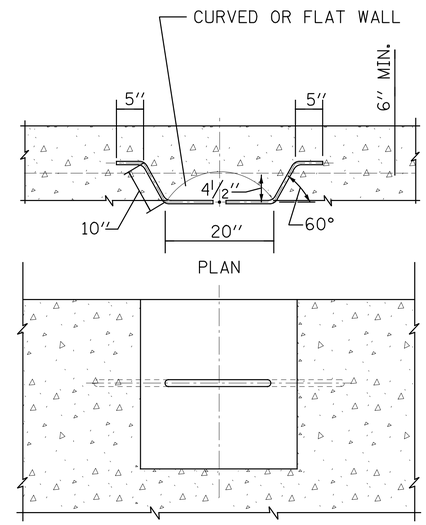

PLAN

ELEVATION

TYPE Y

NOTES:

1. VERTICAL SPACING = 16'' O.C., ON VERTICAL WALL ONLY.

2. FIRST LADDER RING SHOULD BE A MAXIMUM OF 31'' BELOW TOP OF MANHOLE FRAME

3. STEPS SHALL MEET THE REQUIREMENTS OF ASTM C478 IN ADDITION TO A HORIZONTAL PULL-OUT LOAD OF 1000 LBS. WHEN INSTALLED.

4. ALL STEPS SHALL BE VERTICALLY ALIGNED IN A STRAIGHT LINE.

5. NO STEPS LOCATED INSIDE MANHOLE CHIMNEY.

6. MINIMUM CONCRETE STRENGTH MUST BE 3000 PSI

7. HOLES- PREFORMED/DRILLED
   A. HOLES MUST BE PARALLEL
   B. HOLES MUST BE 10'' CENTERED, 1'' DIAMETER
   C. MINIMUM DEPTH- 3 1/2'' TO 3 3/4''

STANDARD REVISIONS	
DATE	DESCRIPTION
12/28/15	APPROVED PLAN

PERCENT COMPLETE	DATE
30	
60	
75	
90	
100	
BULLETIN	

CITY OF CHICAGO
DEPARTMENT OF WATER MANAGEMENT
BUREAU OF ENGINEERING SERVICES

LADDER RUNGS

DRAWN: SBW
DESIGNED:
CHECKED:
REVIEWED:

A.20

___ OF ___

PN _____

$FILE$
$DATE$

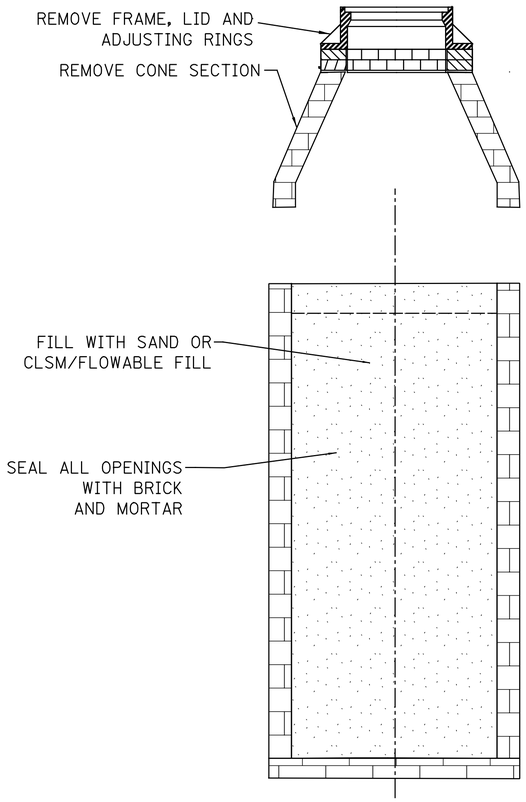

ABANDON CATCH BASIN

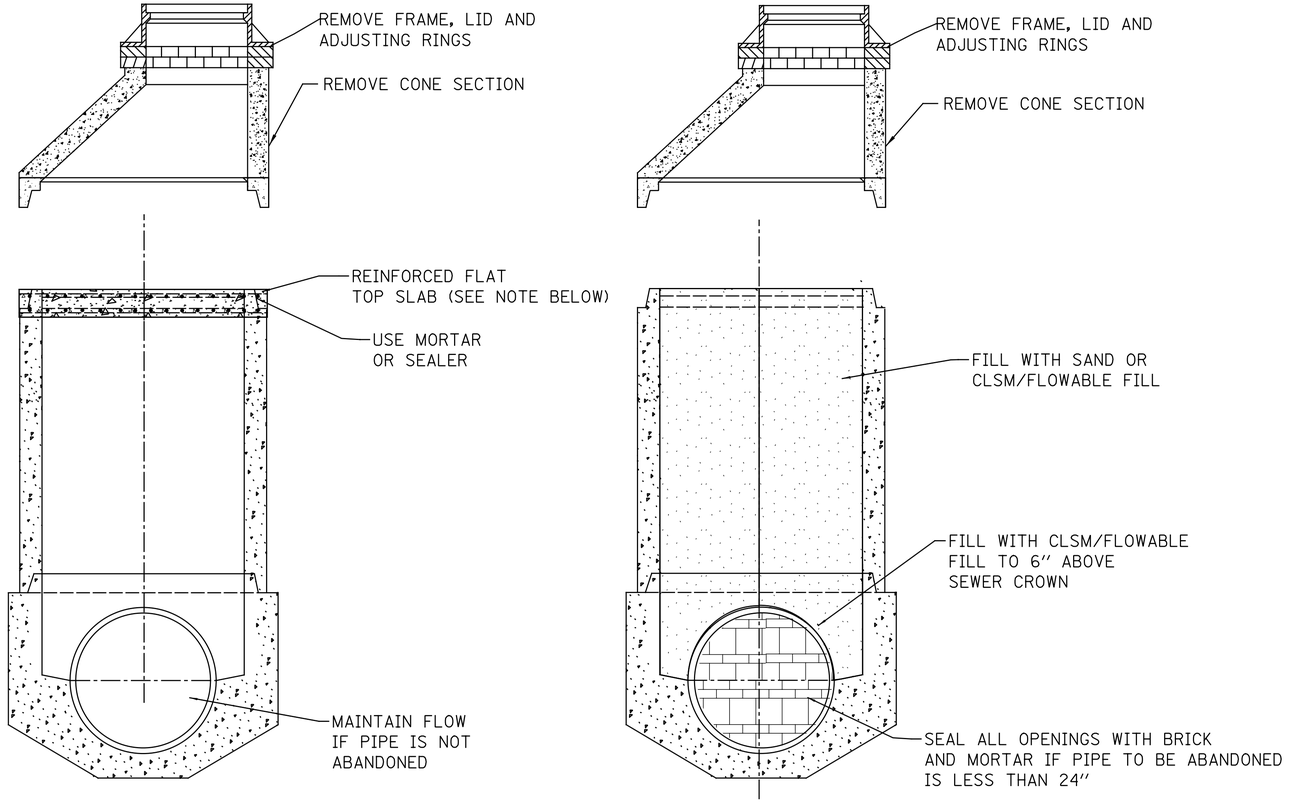

ABANDON MANHOLES

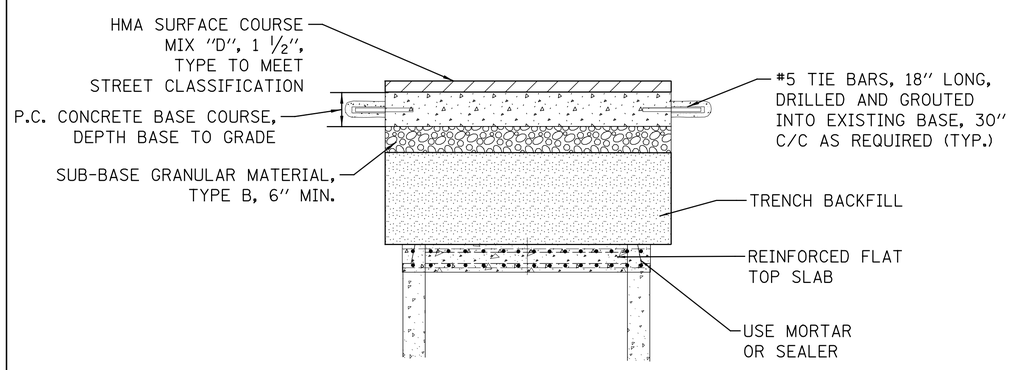

IN PAVEMENT AREA

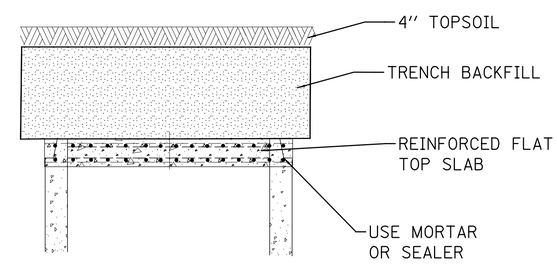

IN LANDSCAPE AREA

NOTE
REINFORCED FLAT TOP SLAB.
SEE IDOT STD. 602601-03 OR CURRENT MODIFIED WITH NO ACCESS HOLE

STANDARD REVISIONS	
DATE	DESCRIPTION
10/15/15	APPROVED PLAN

PERCENT COMPLETE	DATE
30	
60	
75	
90	
100	
BULLETIN	

CITY OF CHICAGO
DEPARTMENT OF WATER MANAGEMENT
BUREAU OF ENGINEERING SERVICES

ABANDONED SEWER STRUCTURE DETAILS

DRAWN: SBW
DESIGNED:
CHECKED:
REVIEWED:

A.21

___ OF ___

PN _____

Traps – Interceptors – Separators - Basins

The followings diagrams are examples and/or samples of traps, interceptors, separators and / or basins for external use only. Point of use / internal traps, interceptors, separators and / or basins must be submitted, reviewed and approved by the Department of Building's current processes. The Sewer Permit Section of the Department of Buildings and the Sewer Design Section of the Department of Water Management have the right to request information, review, approve or inspect any product under Article X, Section 18-29-1000 of the Municipal Code, as well as the right to add or remove any of these samples referenced. All products must be properly selected, sized, installed and operated based upon the manufacture's requirements and as intended to address the specific need.

All traps, interceptors, separators, and/or basins must satisfy Section 18-29, Article 10, Traps, Separators, and Interceptors, Section 11-4, Article 6, Waste Control, of the Municipal Code of the City of Chicago, and in Title 77,Chapter I, Subchapter R, Part 890 ,Section 890.510 Of The Illinois Plumbing Code Grease Interceptor Requirements.

EXAMPLES ONLY

As defined in the Uniform Plumbing Code - Appendix H, Grease Interceptors are designed to control and prevent harmful substances from entering the sanitary drainage system. This worksheet was designed to assist the engineer in choosing the proper grease interceptor.

No. of Meals Per Peak Hour		Waste Flow Rate		Retention Time		Storage Factor		Calculated Liquid Capacity	Grease Interceptor
0.00	x	0	x	0.0	x	1.00	=	0	
Step 1		Step 2		Step 3		Step 4		Step 5	Step 6

1

Number of Meals Per Peak Hour (Recommended Formula):

Seating Capacity [ ] x Meal Factor [ ] =

Establishment Type	Min Per Meal	Meal Factor
Fast Food	45	1.33
Restaurant	60	1
Leisure Dining	90	0.67
Cafeteria / Hospital	120	0.5

Meals per Peak Hour: 0.00

2

Waste Flow Rate:

Condition	Flow Rate:
With a Dishwashing Machine	6 gallons
Without a Dishwashing Machine	5 gallons
Single Service Kitchen	2 gallons
Waste Disposer Only	1 gallon

Waste Flow Rate: [ ]

3

Retention Time:

Type of Kitchen	Time
Commercial Kitchen	2.5 hours
Single Service Kitchen	1.5 hours

Retention Time: [ ]

4

Storage Factor

Restaurant Opens		Restaurant Closes		Hours of Operation (8 Hour Min.)
[ ]		[ ]	=	0.00

For Single Service Kitchens, Storage Factor is 1.50

(Midnight is 12:00 AM)

Kitchen Type	Storage Factor:
1. Fully Equipped Commercial	
Hours of Operation	
8 hours	1.00
12 hours	1.50
16 hours	2.00
24 hours	3.00
2. Single Service	1.50

Storage Factor: 1.00

5

Calculated Liquid Capacity:
Multiply the values obtained from steps 1, 2, 3 and 4. The result is the approximate grease interceptor size for this business.

Notes:

6

Select Grease Interceptor:
Using the approximate required liquid capacity from step 5, select appropriate size grease interceptor.

Notes:

THIS WORKSHEET IS INTENDED FOR ESTIMATING THE SIZE OF A GREASE INTERCEPTOR ONLY!

EXAMPLES ONLY

Grease Interceptor Sizing Worksheet

Complete table below and submit with project plans. This worksheet is intended for estimating the size of a grease interceptor only. The final determination for the size of the grease interceptor will be made by the appropriate personnel.

Date		Business	
Address		Calculated by	
Pipe Size (2, 3,4,6)		Flow Rate (GPM)	
Meals/Day		Restaurant type (low/med/high)	
Flatware (yes/no)		Monthly grease production (lbs)	
Grease Interceptor Manufacturer		Model No.	

Pipe Size (Nominal)	Full Pipe Flows	Half Pipe Flows
2	18	9
3	51	26
4	110	55
6	314	157

Flow rates per American Society of Plumbing Engineers (ASPE)

Step 1 -size by flow rate (GPM): select grease interceptor with a rating that is equal to or greater than the half pipe flow of the according drain-line pipe size.

Step 2 -calculate grease production for pump-out cycle: after selecting minimum size grease interceptor by flow rate, calculate the grease production to achieve the target pump-out schedule of at least 1 month and no more than 3 months. Choose grease interceptor that meets or exceeds required grease storage. If exact number of meals is known, calculate with formula; if exact number of meals is unknown, use grease production table below

Meals Per Day	Low Grease Production		Medium Grease Production			High Grease Production
	Sandwich Shop, Convenience Store, Fresh, Bar, Sushi, Bar, Delicatessen, Snack Bar, Ice Cream Parlor, Hotel, Breakfast Bar, Residential		Coffee House, Pizza, Cafeteria, (no food prep), Japanese, Fast Food, Drive-In, Greek, Indian, Low Grease Output FSE (w/fryer)			Cafeteria, Family Restaurant, Italian, Steak House, Chinese, Bakery/Donut Shop, Buffet, Mexican, Seafood, Barbecue, Fried Chicken, Grocery Store
	No Flatware 0.005 lbs./meal	With Flatware 0.0065 lbs./meal	No Flatware 0.025 lbs./meal	With Flatware 0.0325 lbs./meal	No Flatware 0.035 lbs./meal	With Flatware 0.0455 lbs./meal
	Grease Lbs. Per Month	Grease Lbs. Per Month	Grease Lbs. Per Month	Grease Lbs. Per Month	Grease Lbs. Per Month	Grease Lbs. Per Month
100	15	20	75	98	105	137
200	30	39	150	195	210	273
300	45	59	225	293	315	410
400	60	78	300	390	420	546
500	75	98	375	488	525	683
750	113	146	563	731	788	1024
1,000	150	195	750	975	1050	1365
1,250	188	244	938	1219	1313	1706

No. of Meals Per Day		Grease :Lbs. /meal		Days/Pump out cycle		Calculated Grease Production
	x		x		=	0
Step 1		Step 2		Step 3		Step 4

EXAMPLES ONLY

Grease Separators
Sizing for Commercial Sinks

BATCH DUMPING PROCESS

The separator should hold one half of the liquid holding capacity of the sink that it services. To determine the cubic holding capacity of the sink, multiply the Length by the Width by the Depth in inches. Divide this figure by 231 to obtain the liquid holding capacity in Gallons. (Example shown is a single compartment sink. Multiply by the number of compartments to get the total holding capacity.) Use this figure in the chart.

Holding Capacity in Gallons Formula:

$$\frac{L'' \times W'' \times D''}{231}$$

Example:

$$\frac{24'' \times 24'' \times 20''}{231} = \frac{11{,}520 \text{ cu in}}{231} = 49.87 \text{ Gal}$$

*Low-Inlet models are recommended when a quick opening drain valve is used on the sink waste, resulting in a low waste outlet from the sink. Use a Low-Inlet model when there is not sufficient room next to the sink, or when it is necessary to place the separator underneath the sink drainboard. On larger model separators, we recommend a flush-with-floor installation in concrete floor construction. For installations in or on the floor below, use the next larger size separator.

Example:
Type of Fixture: 2-Compartment Commercial Sink
Maximum Holding Capacity of Fixture: 30 gallons
Liquid Holding Capacity and Seal of Separator: 17 gallons

Example:
Number of Fixtures: 3-5
Maximum Holding Capacity of Fixture: 110 gallons
Liquid Holding Capacity and Seal of Separator: 60 gallons

Location: Floor below fixtures

COMMERCIAL FOOD WASTE GRINDER

A grinder with a 1/2 h.p. motor requires a separator with a minimum holding capacity of 50 gallons. This is for a small installation in a restaurant with a seating capacity up to 100 people. For larger grinders with higher h.p. ratings, each additional 1/2 h.p. requires an increase of 20 gallons to the separator. Thus, a 1 h.p. grinder requires a 70 gallon holding capacity, a 1 1/2 h.p. grinder requires a 90 gallon holding capacity, and so on

EXAMPLES ONLY

.

DISHWASHER

Select a separator with a holding capacity equal to one hour's water consumption. On a dishwasher with three tanks, bypass the final rinse when permitted by code. If the rinse water bypasses the separator, the liquid holding capacity of the separator shall be equal to or greater than the total liquid holding capacity of the dishwasher

Grease Interceptors

General Information

Interceptors are mainly used for one product. There are grease interceptors, solids interceptors, hair interceptors, lint interceptors, etc....but each unit can only be used for its intended purpose. In some cases, a combination of two units is required. Example: A solids interceptor should be used in front of a grease interceptor. All interceptors require an external flow control in front of it. Some will have a restrictor on the inlet of the interceptor and call it a built-in flow control. It is still on the front end of the interceptor and does not allow the waste to enter the interceptor unobstructed.

HOW TO CLEAN THE INTERCEPTOR

For a passive grease interceptor to perform as designed, a strict maintenance schedule must be followed. If adequate maintenance is not performed, excessive grease buildup will occur until water, laden with grease, passes directly through the unit. Therefore, no matter how efficient the design or how proper the installation, these units perform only as well as the maintenance routine allows.

Cleaning and Maintenance Instructions should accompany every interceptor. It is a good practice to have a copy of the cleaning instructions located near the interceptor, directing the user on the proper operation/cleaning methods.

1. Remove floating grease.
2. Remove solids from the bottom of the unit.
3. Inspect gasket for damage and replace if necessary.
4. Replace cover and secure cover tightly.
5. Grease and other waste matter that has been removed from the interceptor should not be introduced into any drain, sewer, or natural body of water. This waste matter should be placed in proper containers for disposal.

Note: Cover gaskets are necessary to seal against gases and to prevent overflows. They must be heavy and elastic enough to give easy sealing.

Interceptors are not pressure vessels. Covers should be easily removable. When an interceptor is set in the floor, stainless steel bolts should be used (brass bolts are too easily stripped; steel bolts become rust locked). NOTE: Interceptors not easily opened for cleaning will not be cleaned regularly.

Many products are sold as aids to seemingly clean grease interceptors. These include acids and caustics with known hazards in handling, or so-called "miracle enzymes" with limited conditions and special instructions. These type of products are NOT RECOMMENDED because of the damage they can do to the interceptor, as well as the fact that the interceptor catches the grease at the point of use to be disposed, and not to give the user a vessel to add chemicals into the waste stream.

EXAMPLES ONLY

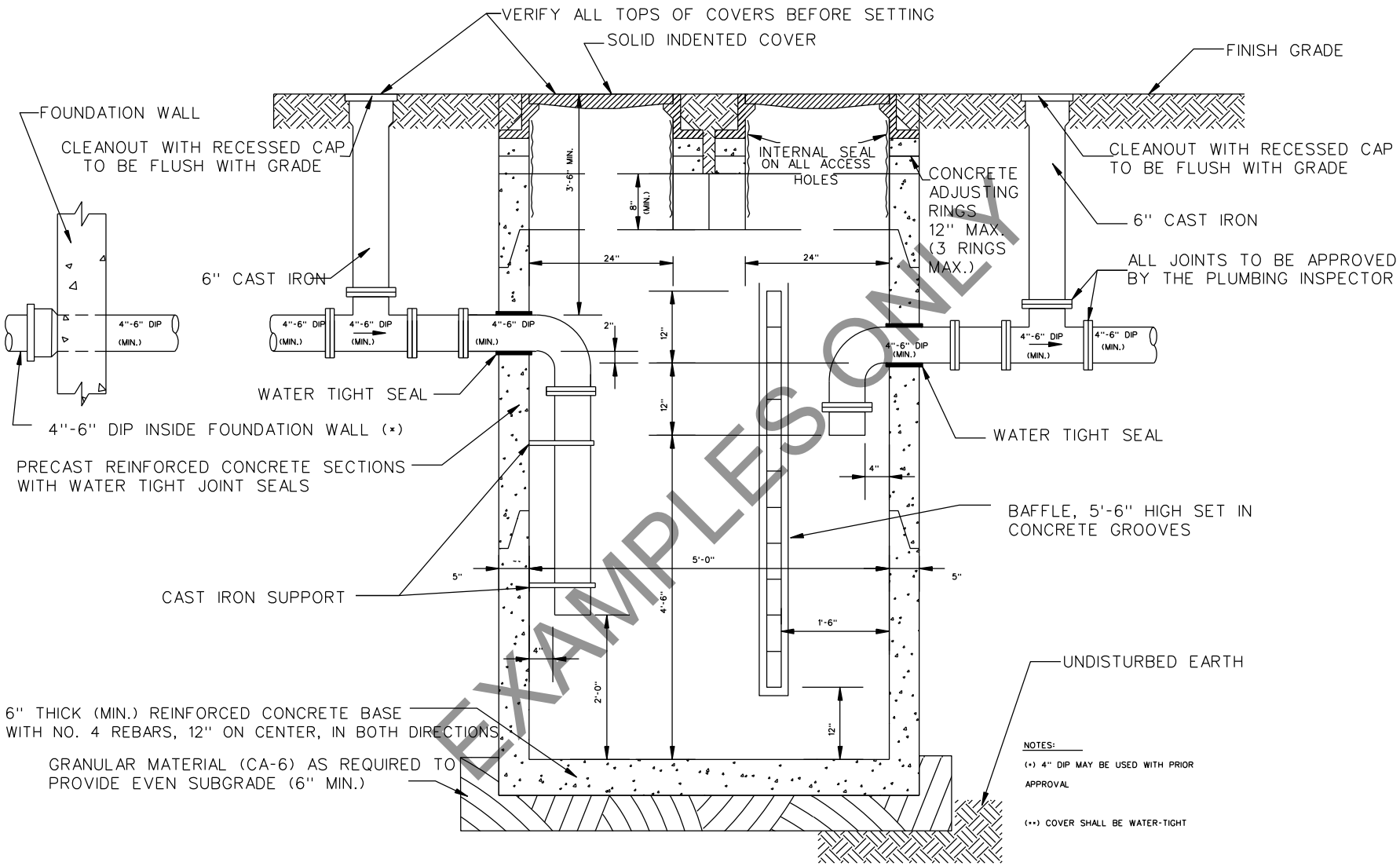

EXAMPLES ONLY

DRAWN BY SBW

CHECKED BY GD, GC, SO

EXAMPLE ONLY

REVISIONS	
DATE	DESCRIPTION
2/15/14	Revised

SCALE: AS SHOWN

CITY OF CHICAGO
DEPARTMENT OF WATER MANAGEMENT
BUREAU OF ENGINEERING SERVICES

Grease Basin Standard

A.100.6

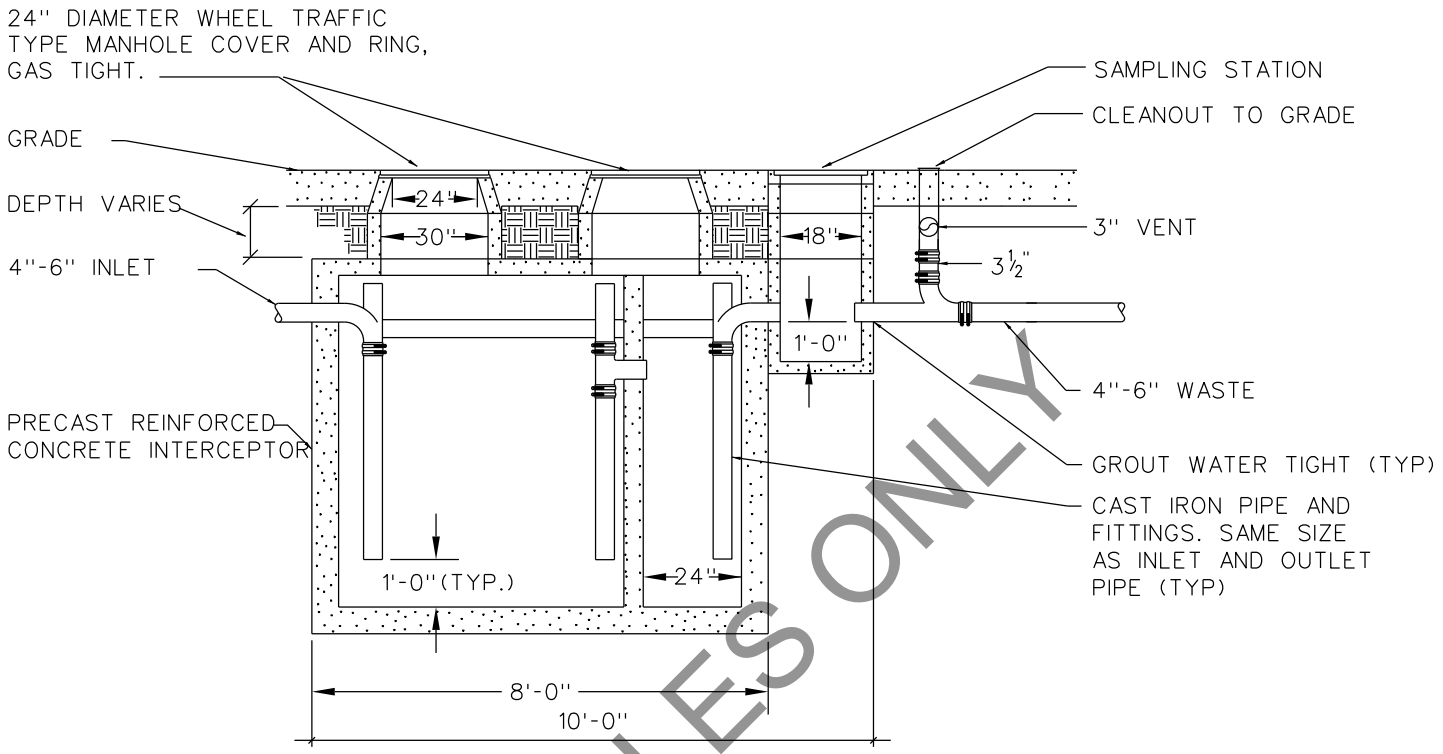

GREASE INTERCEPTOR DETAIL

NO SCALE

EXAMPLES ONLY

Notes:

This detail is applicable to 2 criteria:
1. Apartment buildings, 13-39 units
2. Fast food Establishments

For apartment buildings with 7-12 units,grease basin size is 3 feet by 6 feet.

This detail serves as a guide only. Developers/owners must submit product and/or materialspecifications and details from localmanufacturers/suppliers for review and approval by Department of Buildings and Department of Water Management.

DRAWN BY SBW

CHECKED BY GD, GC, SO

REVISIONS	
DATE	DESCRIPTION
2/18/14	Final

CITY OF CHICAGO
DEPARTMENT OF WATER MANAGEMENT
BUREAU OF ENGINEERING SERVICES

Large Capacity Grease Interceptor

SCALE: AS SHOWN

A.100.7

EXAMPLE ONLY

GREASE SEPARATOR

PLAN and SECTION - CC

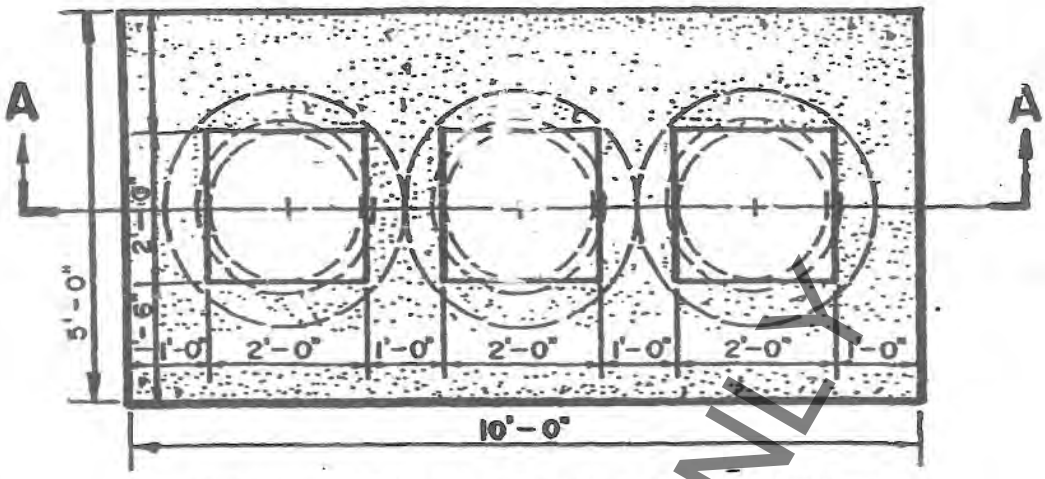

For Restaurants Units other than Fast Food Establishments or Apartment Building 40 Units and Over.

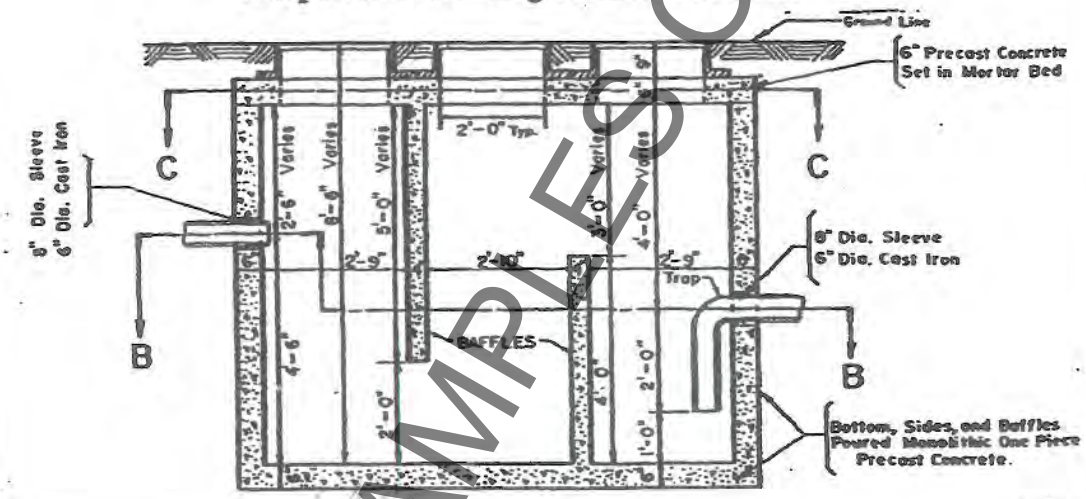

SECTION - BB

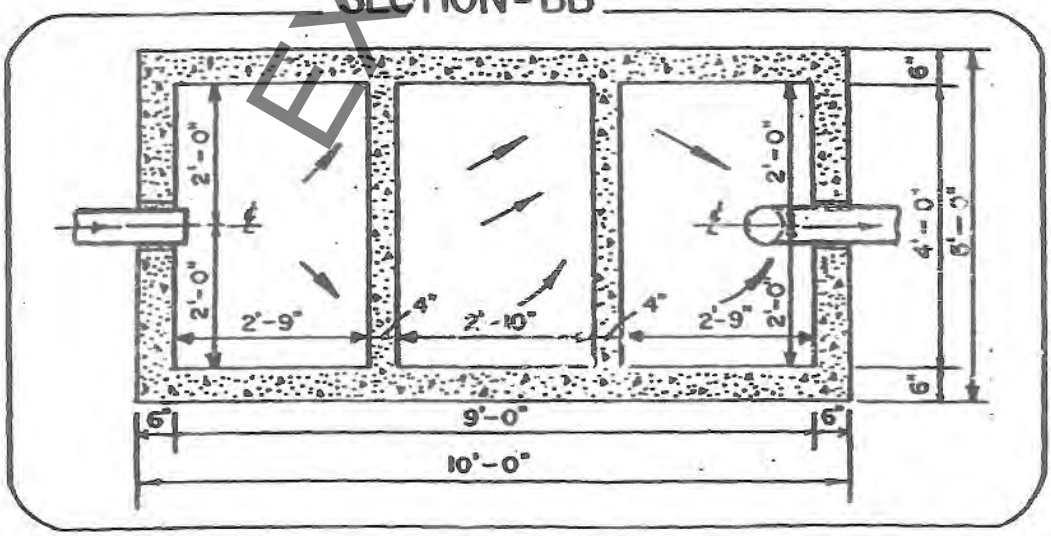

EXAMPLES ONLY

PRECAST GREASE BASIN

FOR APARTMENT BUILDINGS 13 TO 39 UNITS OR FAST FOOD ESTABLISHMENTS.

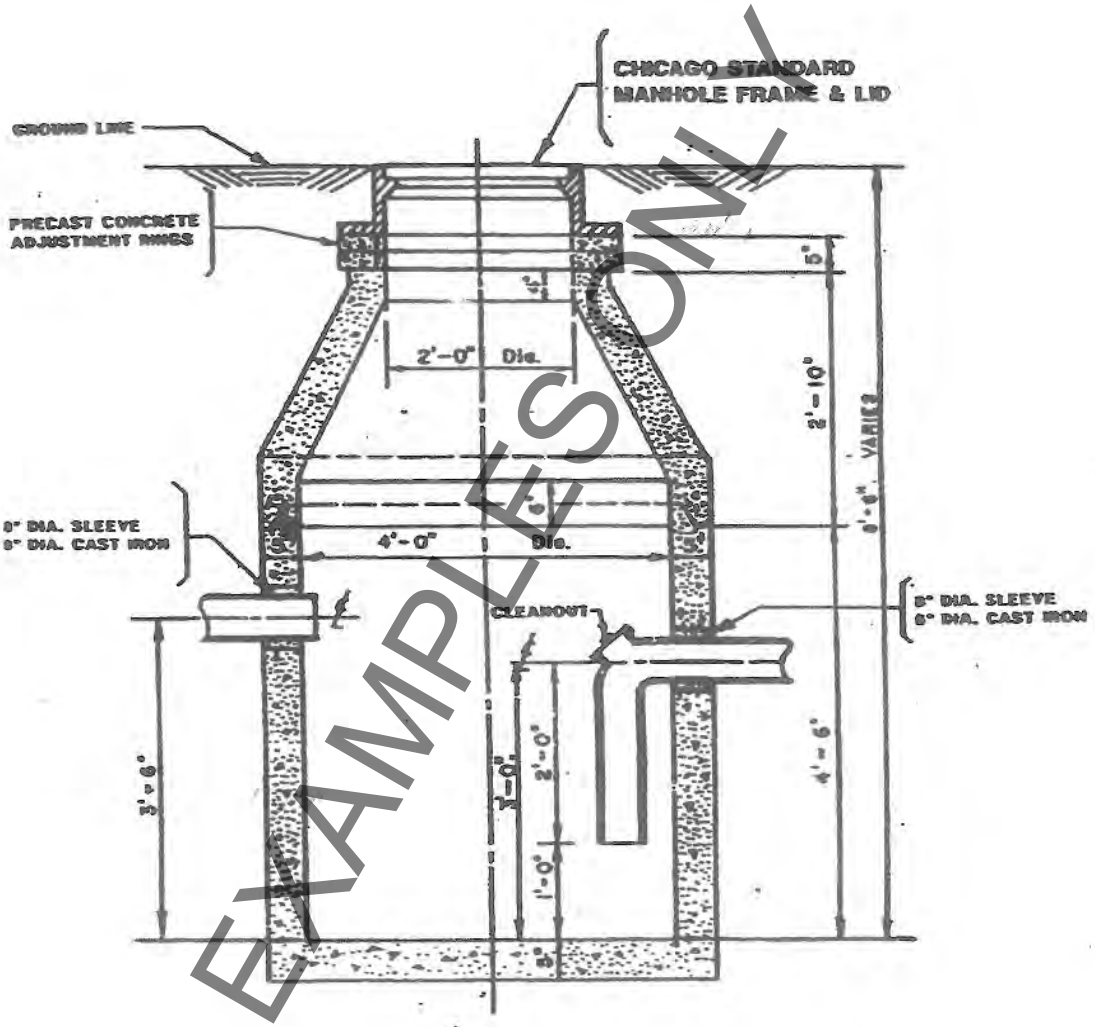

EXAMPLES ONLY

GREASE BASINS MUST BE VENTED WHEN CONSTRUCTED INSIDE BUILDINGS.

NOTE:

FOR APARTMENT BUILDINGS WITH 7 TO 12 UNITS, A GREASE BASIN 3 FEET BY 6 FEET IS REQUIRED.

Sand / Oil Interceptor Sizing Worksheet

Business Name: _____ Date: _____

Address: _____

City, State, Zip: _____ Calculated By: _____

To calculate the required volume, complete the highlighted boxes

Step 1

Size of Facility

Facility Size (Square Feet)
1

Square Footage
1

Step 2

Facility Type

1	Truck Washes, Heavy Equipment Wash
2	Automatic Car Wash
3	Car Wash (Hand Held)
4	Machine Shop, Work Area, & Automotive Workshop
5	Paint Spray Booths
6	Printer
7	Parking Garage (where floors are to be washed)
8	Parking Garage (where tenant cars are to be washed)
9	Parking Garage (No Water, Fire Sprinklers Only)

Facility Type
1

Facility Size		Facility Factor		Conversion Factor		Storage Factor		Calculated Liquid Volume		Sand - Oil Interceptor Size (Gal.)
1	x	0.0667	x	7.48	x	2.0	=	1		0
Step 1		Step 2		Step 3		Step 4				

Facility Use	Sq. Ft.
Truck and Heavy Equipment	15
Automatic Car Washes	50
Car Wash (hand-held spray)	75
Machine Shop / Work Area /	100
Paint Spray Booth	250
Printers	300
Parking Garages (floors are to be	2,000
Parking Garages (tenant cars are to	3,000
Parking Garages (no water outlets	4,000

EXAMPLES ONLY

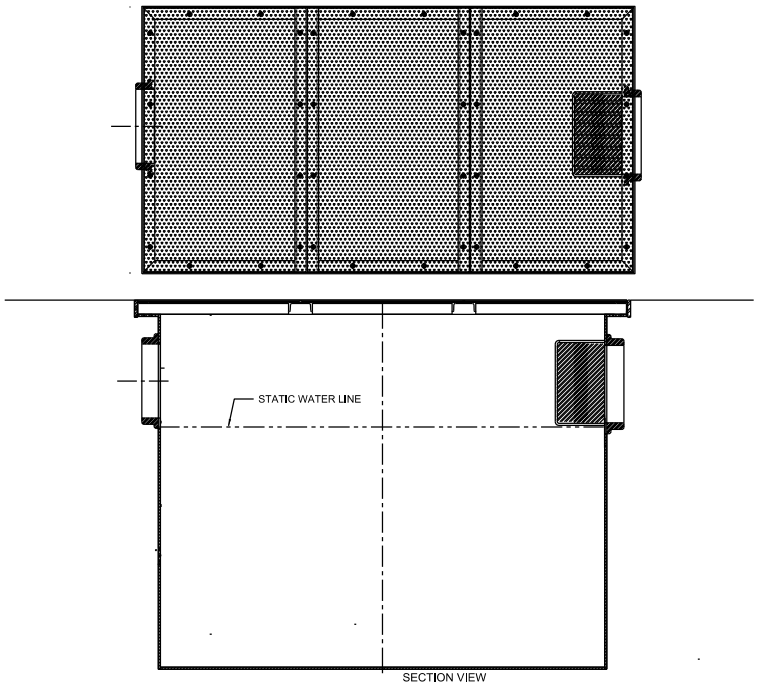

NonBaffled Grease-Oil Trap/Interceptor

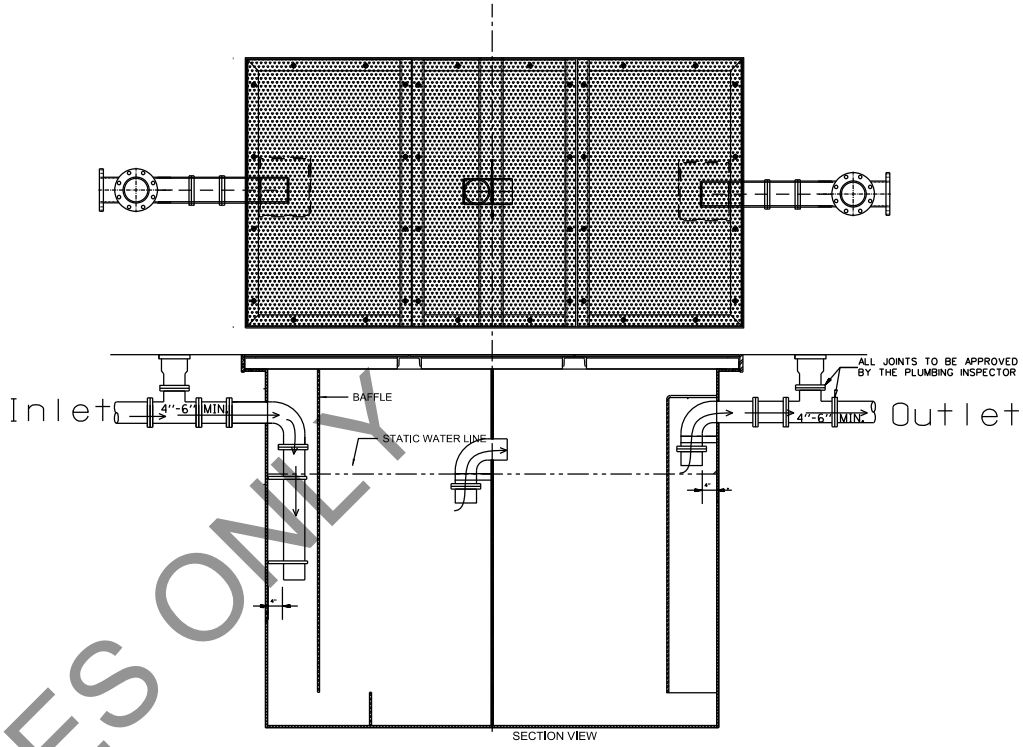

Baffled Grease-Oil Trap

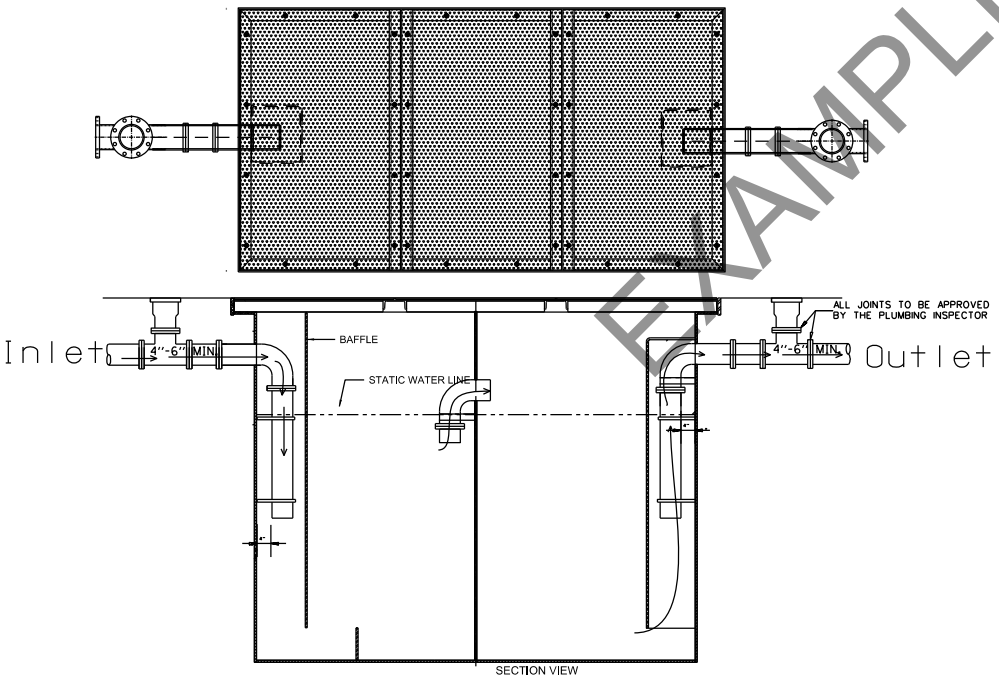

Baffled Grease Interceptor

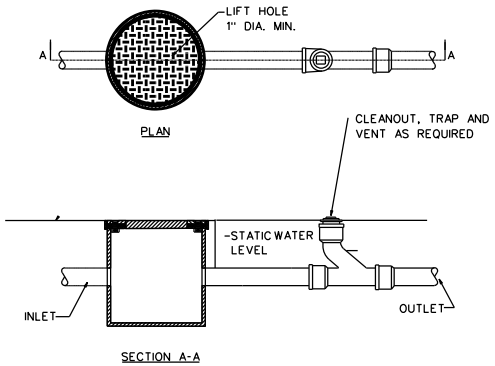

Optional SAMPLING BOX

NO SCALE

EXAMPLES ONLY

REVISIONS	
DATE	DESCRIPTION
2/18/14	Final

CITY OF CHICAGO
DEPARTMENT OF WATER MANAGEMENT
BUREAU OF ENGINEERING SERVICES

Oil/Grease Trap/Interceptor

SCALE: AS SHOWN

DRAWN BY SBW

CHECKED BY GO, GC, SO

EXAMPLE ONLY

A.102.2

Lint Interceptor Sizing Calculator for Gravity Drain Laundry Machines	
Number of Machines	5
Average Gravity Discharge Rate per Machine (GPM)*	12.5
Average Wash Cycle (hours)*	0.7
Average Operating Hours (hours)*	16
Average Turns Per Day Per Machine*	5.5
Simultaneous Use Probability	**75.0%**
Maximum Drain Load to Interceptor (GPM)	**47 GPM**
* All Data for constants provided by Alliance Laundry Systems (www.unimac.com) or the Coin operated Laundry Association (www.coinlaundry.com)	
Alternate Lint Interceptor Sizing calculator	
Total Gallons Per Cycle	
Cycles per hour	
Retention time	
Storage factor (based on hours of Operation)	
Size of Lint Interceptor in Gallons	**0**
Storage Factors	
Laundry Type	*Factor*
Institutional Laundry	2.5
Standard Commercial Laundry	2.0
Light Commercial Laundry	1.5

EXAMPLES ONLY

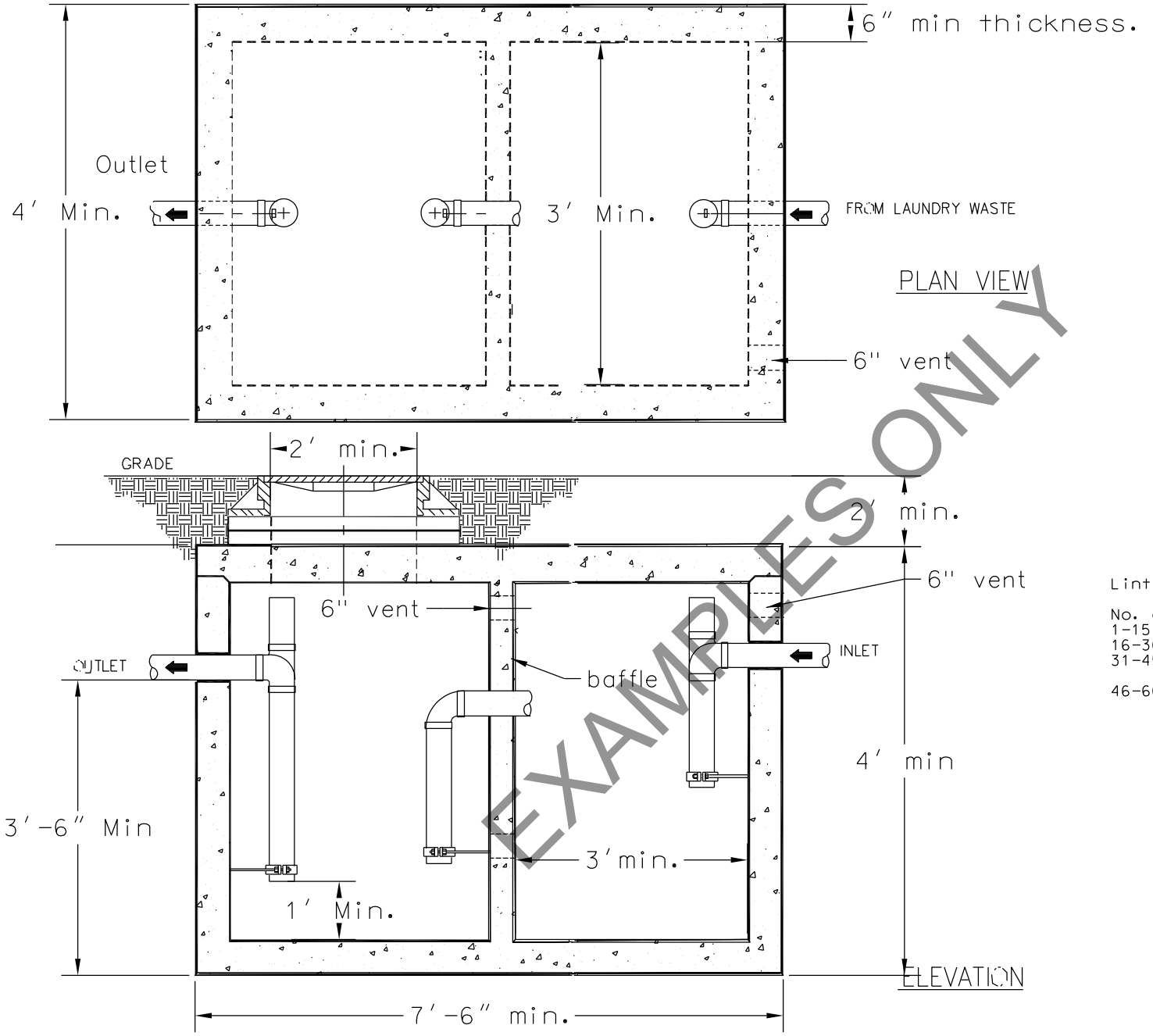

Lint basin criteria:

No. of Washing Machines	No./size of basins
1-15 units	1, 3′x6′
16-30 units	1, 4′x8′
31-45 units	2, 1 of each size above
46-60 units	2, 4′x8′

EXAMPLES ONLY

DRAWN BY SBW

CHECKED BY GD, GC, SO

EXAMPLE ONLY

REVISIONS	
DATE	DESCRIPTION
2/18/14	Final

CITY OF CHICAGO
DEPARTMENT OF WATER MANAGEMENT
BUREAU OF ENGINEERING SERVICES

Lint Basin Standard

SCALE: AS SHOWN

A.102.4

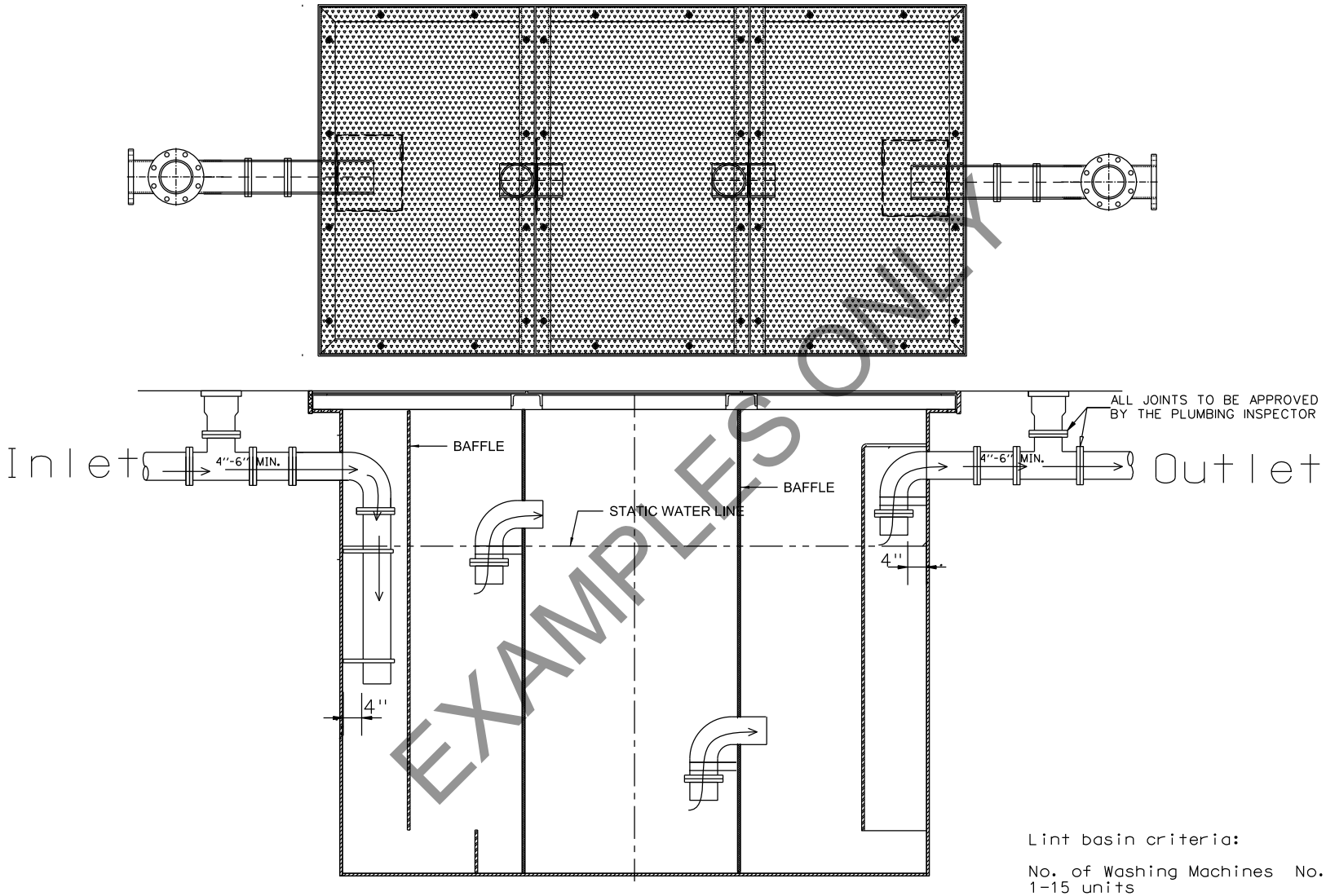

EXAMPLES ONLY

Lint basin criteria:

No. of Washing Machines	No./size of basins
1-15 units	1, 3'x6'
16-30 units	1, 4'x8'
31-45 units	2, 1 of each size above
46-60 units	2, 4'x8'

EXAMPLE ONLY

DRAWN BY SBW

CHECKED BY GD, GC, SO

REVISIONS	
DATE	DESCRIPTION
2/18/14	Final

CITY OF CHICAGO
DEPARTMENT OF WATER MANAGEMENT
BUREAU OF ENGINEERING SERVICES

Lint Basin Standard

SCALE: AS SHOWN

A.102.5

Precast Grease/Lint Basin

NOTE: Basins must be vented when constructed inside buildings.

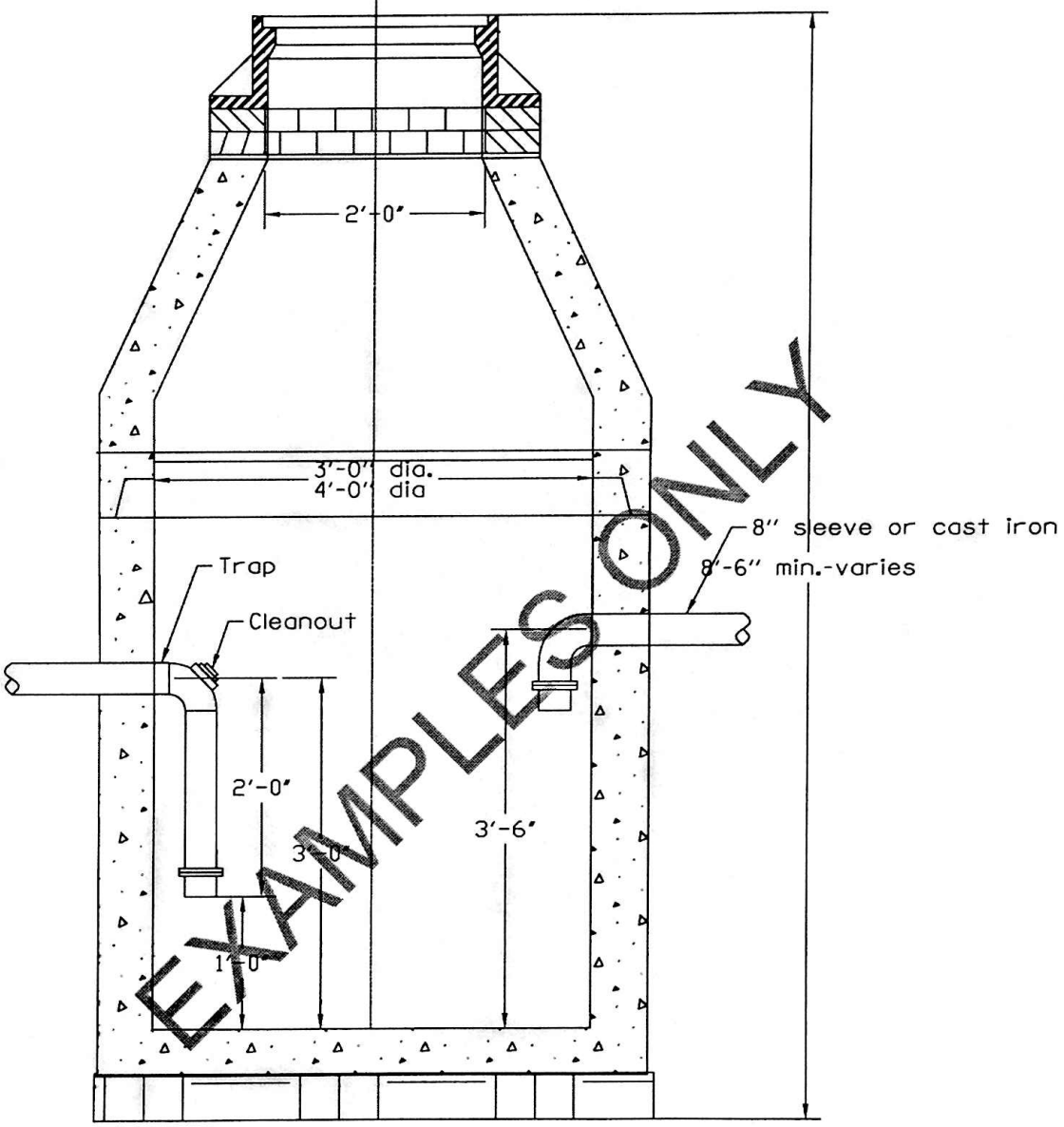

EXAMPLES ONLY

Grease basin requirements:
1. Apt. buildings 13-39 units and fast food establishments, use 4' basin.
2. Apt buildings 7-12 units, use 3'x 6' basin

Lint Basin Requirements:

No. of Washing Machines	Qty & Size of basins
1-15 units	1 basin, 3'x6'
16-30 units	1 basin, 4'x8'
31-45 units	2 basins, 1 each 3'x6' & 4'x 8'
46-60 units	2 basins, 4'x8'

AMOUNT OF WASHING MACHINES	REQUIREMENT, AMOUNT & SIZE
One to 15 Units	1 — 3' X 6'
16 to 30 Units	1 — 4' X 8'
31 to 45 Units	2: 1, 3' X 6' and 1, 4' X 8'
46 to 60 Units	2 — 4' X 8'

PRECAST LINT BASIN

Lint Basin must be vented when constructed inside building.

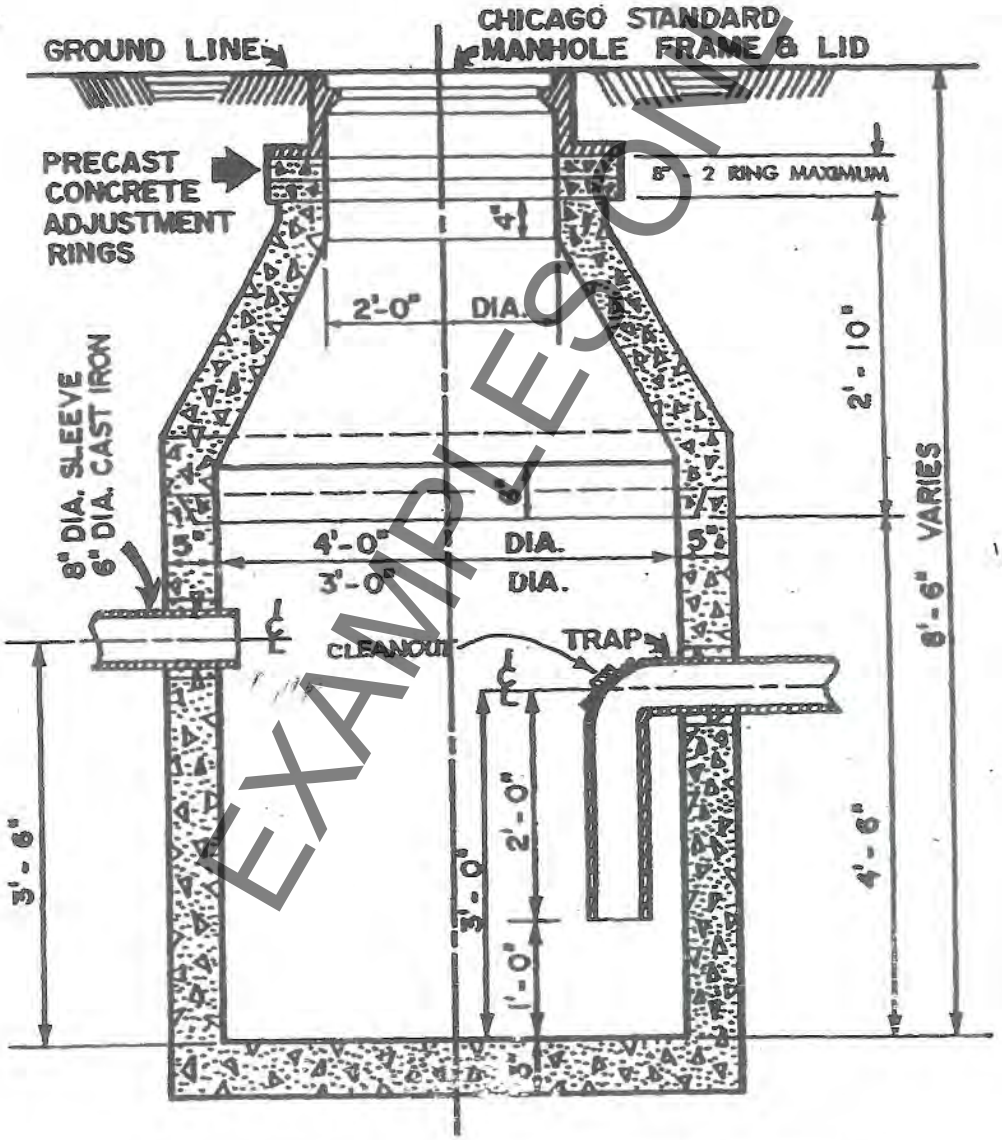

EXAMPLE ONLY

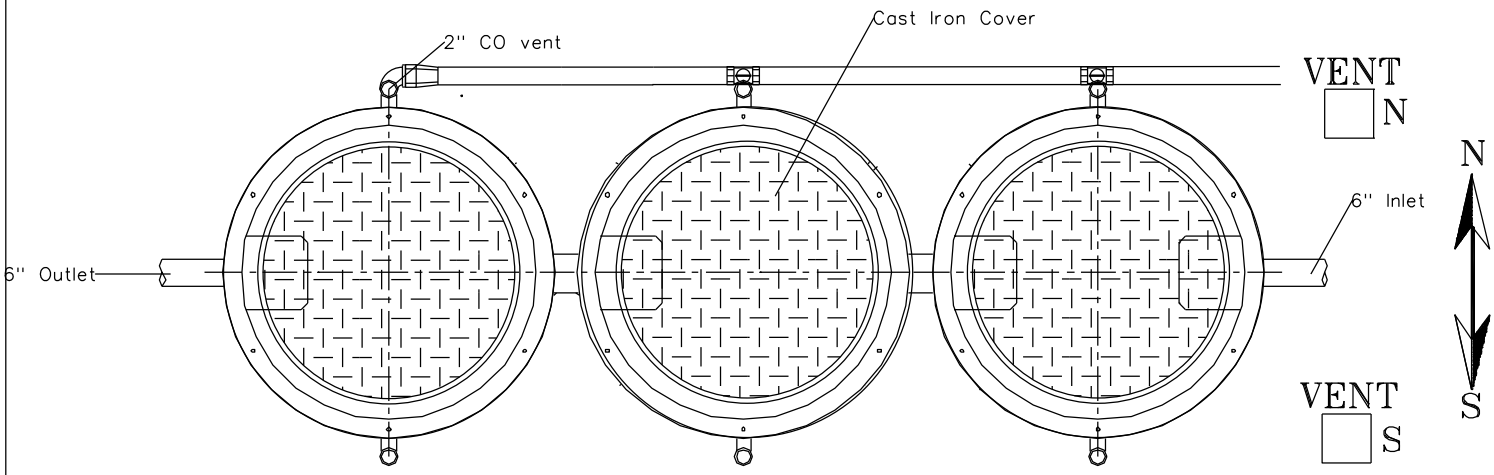

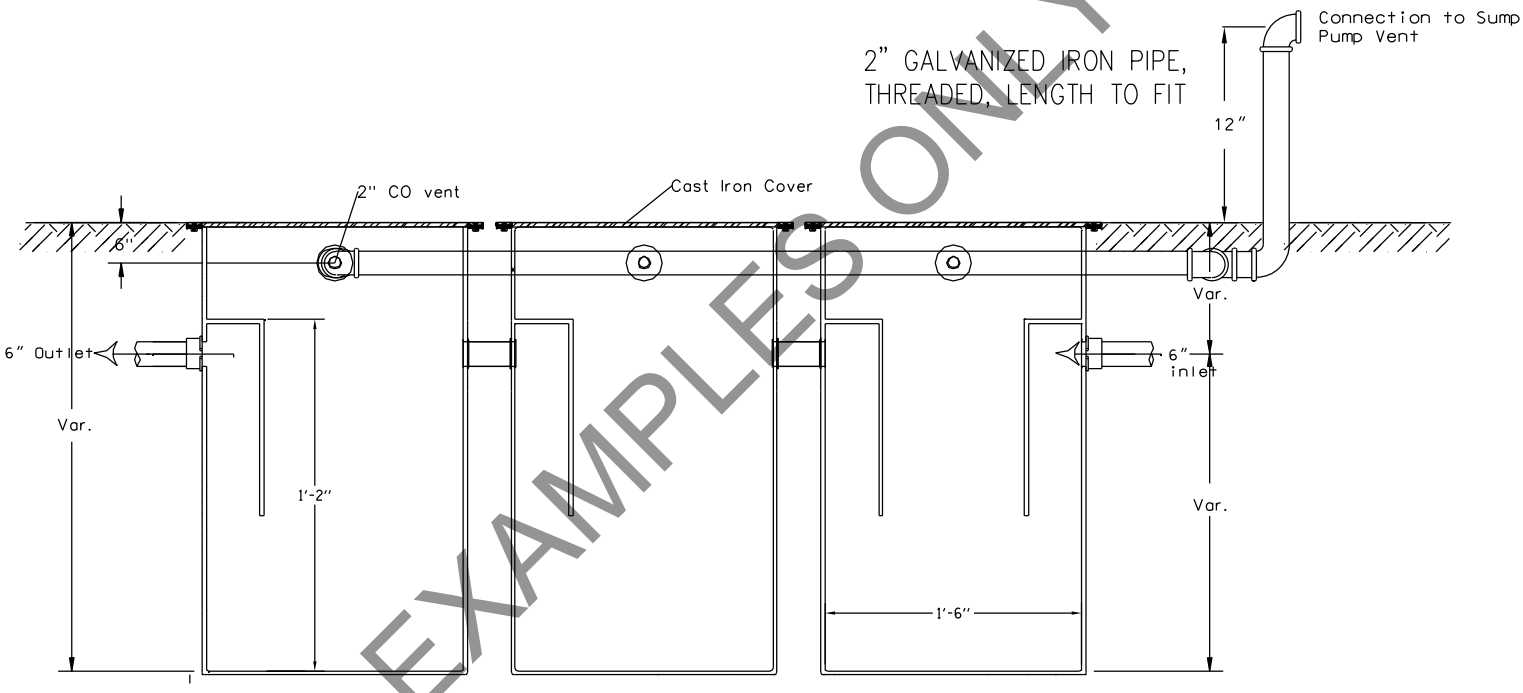

EXAMPLES ONLY

Notes:

1. Minimum diameter of each basin must be 1'-6".
2. Bottom of each basin must be 1'-2" below invert of outlet/inlet of all basins.
3. Inlets and outlets must be 6" minimum.
4. Vent connections must be 2" minimum.
5. All basin covers must be cast iron, air-tight, and boltable/lockable.

Material and/or product specification sheets must be submitted with Sewer Permit application for approval.

EXAMPLE ONLY

REVISIONS	
DATE	DESCRIPTION
2/18/14	Final

CITY OF CHICAGO
DEPARTMENT OF WATER MANAGEMENT
BUREAU OF ENGINEERING SERVICES

Triple Garage Basin

DRAWN BY SBW

CHECKED BY GD, GC, SO

SCALE: AS SHOWN

A.103.1

TRIPLE GARAGE BASIN

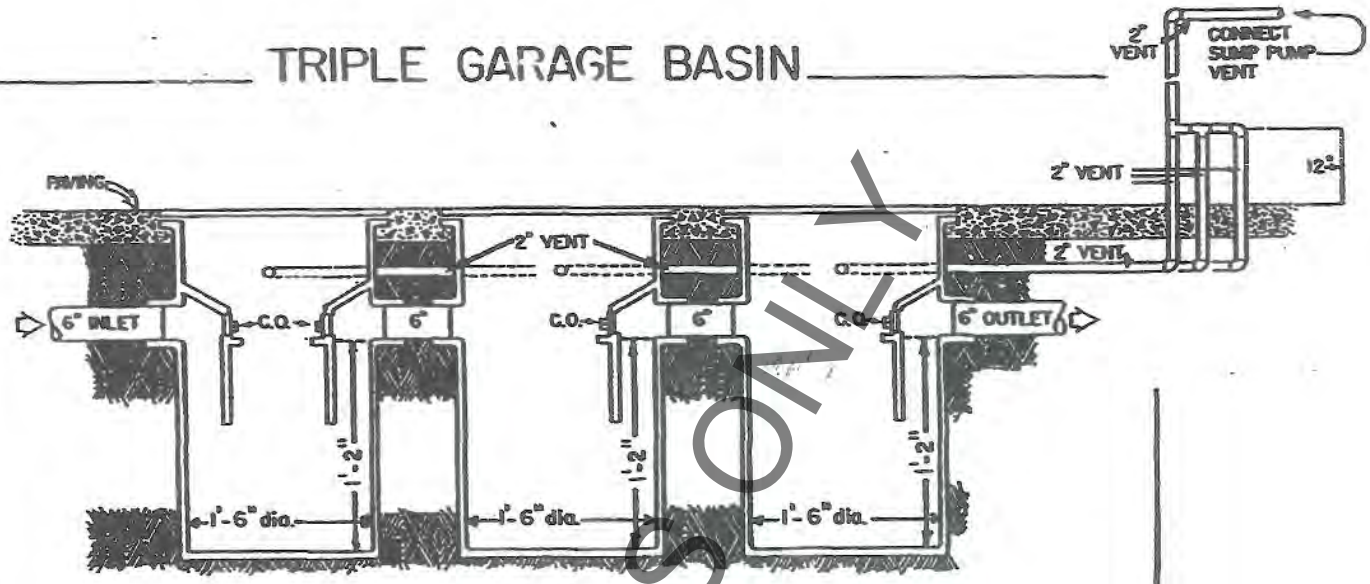

NOTE:

Bottom of Basin shall be 1'-2" below invert of outlet.
Neenah 18" Cast Iron Triple Garage Basins.
6" Inlets and Outlets.
2" Vent connections.
Cast Iron gas-tight bolted covers.
Depths of Basins as required by Inlet & Outlet elevation.
See plan for Invert Elevation.

EXAMPLES ONLY

CITY OF CHICAGO
Department of Water Management

DRAINLAYER'S LICENSE CLASSIFICATIONS:

During 2002, the Department of Water Management implemented a DRAINLAYER'S TRAINING PROGRAM in conjunction with licensing. This program will be offered by City Colleges of Chicago in 2006 again. Successful completion of this program, including passing both a written and practical exam is required in order to obtain a drainlayer's license from the City of Chicago for 2006. All current license holders should have completed this program from January 7, 2005 through November 12, 2005. If not, please see the 2006 Program Schedule attached.

Work included under an "A" drainlayers license
New building construction, sewer main construction, or sewer and sewer related activity is done. All license requirements are needed including C.D.O.T. license, practical and written test every five years.
New construction on private property
New construction in the public way
Single family residences
Development of townhouses - condominiums - multiple family residences
Also, all items included under a type "B" and "C" license

Work included under a "B" drainlayers license
Repairs and construction on existing buildings only, or sewer and sewer related activity is done. No new building construction or new sewer main construction activity is done. Otherwise, all license requirements are needed including practical and written test every five years except C.D.O.T. permit needed only as applicable.
Repairs - Repair extensions
Repair or adjustment of a sewer structure in public way or private property
Flood controls, overhead conversions, sump and drain tile pipe
Flood control repair
Sump pump without overhead conversion/drain tile pipe
Stubs permits
Power rodding
Inspection manhole
Paving
Also, all items included under a type "C" license

Work included under a "C" drainlayers license
Only sewer and sewer related activity is done. No building construction or sewer main construction activity is done. Requirements start on page 13 of the 2006 Permit and Fees Booklet are needed including practical and written test every five years.
Pumping permit for miscellaneous other
Pumping water out of basements
Seal permits
Televising, cleaning, lining and inspection of sewers
Installation of testing equipment

Please be advised a type "A" license encompasses the activity listed under a type "B" and a type "C" license, and likewise a type "B" license encompasses the activity listed under a type "C" license. **Drainlayers ARE NOT ALLOWED to make REPAIRS and/or ADDITIONS in the PUBLIC WAY unless it is for commercial/industrial or a building with more than four units.**

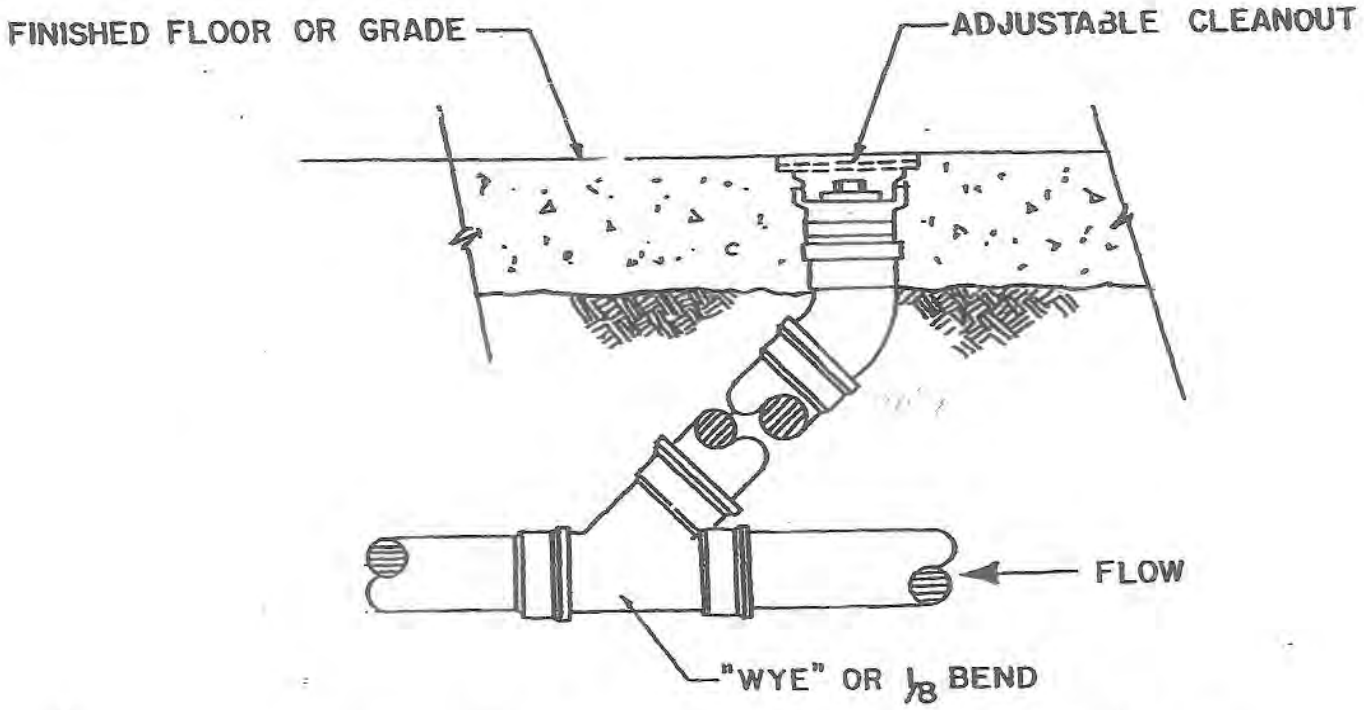

TYPICAL CLEANOUT TO FINISHED FLOOR

NOT TO SCALE

Note: May be used for pipe sizes smaller than 12" in diameter to segment pipe lengths exceeding 150 feet.

STORM SEWER OUTFALL
ASSOCIATED WITH

{Insert Property Street Address}

CALL 311 IF YOU SEE DISCHARGE DURING DRY WEATHER

STORM OUTFALL SIGN ON WATERWAYS

Operation and Maintenance Plan Owner's Certification Statement

Property Name: _____

Property Address: _____

As the owner(s) of the subject property, by signing this document, I/we acknowledge that I/we have received and reviewed the Operation and Maintenance Plan, dated _____, and understand its contents. (as required by the Stormwater Management Ordinance, Section 11-18-030).

In the event that I/we were to sell this property, I/we agree to give a copy of the Plan to the new owner(s) and this Owner's Certification Statement for signature. This signed Certification Statement must be submitted to the City's Department of Buildings upon transfer of ownership.

I/we further agree to adhere to the maintenance schedule of best management practices stipulated in the Plan. I/we also acknowledge that if I/we don't maintain the measures as shown in the Plan, upon City inspection, I/we could be liable for a violation of the City's Municipal Code (according to Stormwater Management Ordinance Section 11-18-130).

_____
Initial Owner(s) Printed Name

_____ _____
Initial Owner(s) Signature Date Notary Public

_____
2nd Owner(s) Printed Name

_____ _____
2nd Owner(s) Signature Date Notary Public

_____
3rd Owner(s) Printed Name

_____ _____
3rd Owner(s) Signature Date Notary Public

CITY OF CHICAGO
Department of Water Management

RIGHT OF WAY AS-BUILTS - RECORD DRAWINGS FORM

The contractor will be required to submit "as built plans" / record drawings of all new sewers and sewer structures that will be owned and maintained by the City. These "as-built plans" / record drawings should be sealed by a registered land surveyor and/or a registered professional engineer and **submitted within 30 days after the completion of the sewer work.** These "as-built plans" / record drawings should be forwarded to the Department of Water Management, Bureau of Engineering Services, Sewer Design Section located at 1000 East Ohio Street, Elevation +51, Room 313, Chicago, Illinois 60611 along with a copy of this form, the coinciding sewer permit and video tape, as applicable.

Drainlayer's Name: _____ Phone No.:

Drainlayer's Signature:

Date of Project Completion:

Date Submitted As-Built Plan / Record Drawing:

FOR OFFICE USE ONLY:

Project Manager: _____ Phone No.:

Project Name:

Project No. and/or Contract No.:
(i.e., CDOT, IDOT, COUNTY)

Project Location:

Issues By: _____ Date:

APPENDIX II-B

City of Chicago - DWM

Bureau of Engineering Services - Sewer Design Section

Design /Construction Affidavit in Support of the Stormwater Infiltration or at Grade Discharge of Downspouts on Residential Buildings

Project Name: _____

Property Address(es)(Property):_____
_____
_____
_____

The Developer/Owner, Designer and Architect (hereafter the Affiants) have authority to sign this Affidavit and have personal facts of the matters contained herein. The Affiants acknowledge that the plans dated _____and approved by the DWM (Plans) form the basis for this Affidavit. The Affiants further acknowledge that in lieu of traditional stormwater management detention/retention and traditional connected and functional downspouts, and to allow for the drainage from each Property, alternative safe and functional flood control measures, in accordance with the Municipal Code, will be installed, connected and operational to the Property as identified above. Further, the Affiants assume full responsibility for the design and construction of the project, and hereby certify that such infiltration and discharge will not create a flooding or safety hazard to the occupants of the subject property or to those adjacent properties as listed above. The alternative safe and functional flood control measures in the above address(es) are feasible for the following reasons:

- Adequate methods to eliminate or control soil erosion have been incorporated into the design and construction.

- Adequate design measures, and/or subsoil investigations have been conducted to ensure that any migration or rising of the groundwater table will not adversely impact existing/proposed buildings.

- Adequate flood proofing of existing and /or proposed basement walls and foundations will be performed to ensure that seepage will not occur.

- Sump pumps to accommodate any surface infiltration will be sized and installed, as needed.

- Positive drainage to the public right-of-way will be provided with at least 0.1 feet of freeboard between an overland flow route to the public right-of-way and low grade to adjacent properties.

If for any reason, within 18 months of building occupancy (as approved by the City of Chicago), the site is found to cause a flooding or safety hazard to the occupants of the subject property or those of the adjacent properties as listed above, the Developer/Owner will be responsible for the performance of the necessary remedial and corrective measures (Responsibilities). The Developer will fully disclose and warrantee these Responsibilities. Further, the terms and facts of this Affidavit will be incorporated into an executed and recorded easement agreement.

Design /Construction Affidavit in Support of the Stormwater Infiltration or at Grade Discharge of Downspouts on Residential Buildings
Page two

Any breach of the conditions contained in this Affidavit, as determined solely by the City of Chicago, that are not cured by the Developer/Owner within 30 (thirty) days of official notice, the City of Chicago may utilize any and all legal and equitable remedies available to the City."

Signed by Designer
Name/Company:
Address:
Phone Number:
Signature:_____, Date_____

Professional Engineer or Licensed Architect's Seal:

_____

Signed by General Contractor
Name/Company:
Address:
Phone Number:
Signature:_____, Date_____

Contractor License Number:

_____

Signed by Developer/Owner
Name/Company:
Address:
Phone Number:
Signature:_____, Date_____

APPENDIX II-C

City of Chicago - DWM

Bureau of Engineering Services - Sewer Design Section

Design /Construction Affidavit in Support of Soil Erosion and Sediment Control Measures during Construction

Project Name: _____

Property Address(es)(Property):_____
_____
_____
_____

The Developer/Owner and General Contractor (hereafter the Affiants) have authority to sign this Affidavit and have personal facts of the matters contained herein. The Affiants acknowledge that the plans, dated _____, and approved by the DWM/DOB (Plans) form the basis for this Affidavit. The Affiants further acknowledge that Regulated Developments, under the City's Stormwater Ordinance, that discharge to a combined sewer system, must provide functional and effective construction soil erosion and sediment control (SESC) at the Property as identified above. Further, the Affiants assume full responsibility for the design, construction and maintenance of SESC measures to prevent the discharge of sediment, dust, and other pollutants in stormwater runoff from the Property.

Construction SESC measures will be installed at the above address(es) prior to land disturbing activities and be maintained in functional order until the property has been "permanently stabilized" (i.e. when all land disturbing activities have been completed, all construction SESC measures have been removed, and an uniform perennial vegetative cover with a density of 70 percent for unpaved areas and areas not covered by permanent structures has been established or equivalent permanent stabilization measures have been completed).

Any breach of the conditions contained in this Affidavit, as determined solely by the City of Chicago, that are not cured by the Developer/Owner within 7 (seven) days of official notice, the City of Chicago may utilize any and all legal and equitable remedies available to the City."

As the General Contractor of the subject Property, I certify adherence to this Affidavit and to the following:

Design /Construction Affidavit in Support of Soil Erosion and Sediment Control Measures during Construction
Page two

The SESC measures will be designed, constructed and maintained in accordance with standards and specifications set forth in the most recent version of the Illinois Urban Manual published by the Illinois Environmental Protection Agency (IEPA) and the Natural Resources Conservation Service (NRCS). As a minimum, all temporary SESC measures such as vegetative cover, silt fences, inlet protection, check dams, etc., shall be designed to accommodate anticipated 1-year storm flows.

Any applicable Storm Water Pollution Prevention Plan (SWPPP) will be followed along with the minimum SESC measures specified herein. The SWPPP will be kept onsite during construction for inspection.

Temporary soil stabilization will be applied to topsoil stockpiles and disturbed areas where construction activity will not occur for a period of more than 21 calendar days.

Permanent soil stabilization shall be done within 14 calendar days after completion of final grading of the soil.

Inspection of SESC measures will be completed at least once every 7 calendar days and within 24 hours of a storm 0.5 inches or greater. SESC measures will be maintained to perform their intended function until the site is permanently stabilized.

All temporary roadways, access drives and parking areas will be stabilized and be of sufficient width and length to prevent sediment from being tracked onto public or private roadways. Any sediment reaching a public or private road shall be removed by street cleaning (not by water flushing) as necessary, or before the end of each workday.

Tires and wheel wells of vehicles and construction equipment shall be free of dirt and/or sediment before leaving a construction area to prevent tracking onto a public or private paved road, or sidewalk.

Trucks loaded with waste material that may be carried off by wind or rain shall be covered prior to leaving the construction site.

All onsite drainage structures within the construction area and down slope within the public right-of-way shall be protected with sediment control measures.

The discharge of sediment into the sewer system, as part of site dewatering, must be controlled and minimized to prevent clogging of the City's sewer system.

The use, storage and disposal of chemicals, cement and other compounds and building materials used on the construction site shall be managed during the construction period, to prevent their entrance into the City's sewer system.

All temporary SESC measures will be removed within 30 days after final site stabilization is achieved or after temporary measures are no longer needed.

Unless adequate sediment and erosion control measures are implemented for all onsite infiltration BMP systems, the installation of such systems will be scheduled after all of the major construction activity is completed.

Design /Construction Affidavit in Support of Soil Erosion and Sediment Control Measures during Construction
Page three

Signed by General Contractor
Name/Company:
Address:
Phone Number:
Signature:_____, Date_____

Contractor License Number:

_____

As the Developer/Owner of the subject Property, I certify adherence to this Affidavit.

Signed by Developer/Owner
Name/Company:
Address:
Phone Number:
Signature:_____, Date_____

APPENDIX II-D CONNECTION SIZING

I. Sanitary Connections Sanitary sewer connection sizes are based on the following table:

*Max. Connection Diameter (in)	Peak DWF (cfs)	Main Sewer Diameter (in)
6	up to 0.35	10
8	0.35 to 0.62	12
10	0.62 to 0.97	15
12	0.97 to 1.55	18 or larger

The DWF (with peaking factor) should be based on the number of fixture units (FTU), reference the *Municipal Building Code, Table 18.29-1108.1.* The conversion from the number of fixture units to drainage area (sf) to peak DWF (cfs) is as follows:

Drainage area = [(FTU – 150) * 7.2] + 4850 sf
Peak DWF = Drainage Area / 43,560 sf/acre * 1.0 cfs/acre

The maximum connection size will be the lesser size indicated by the 2nd or 3rd columns.

II. Storm Connections Storm connections should be one standard pipe size larger than the restrictor size (as determined by the site's maximum release rate), but should not limit the flow. The connection size may be used as a restrictor if it is hydraulically proven, under the maximum design head pressure, that the actual discharge rate will not exceed the maximum allowable discharge rate from the site. Note that all vortex restrictors require an 8-inch diameter receiving pipe or connection. If the connection is used to by-pass upstream flows, then the maximum connection size should be based on the criteria for combined sewers.

III. Combined Connections Combined sewer connection sizes are based on the restricted stormwater discharge from the site plus the peak DWF. The connection size, based on the maximum 100-year flow, assumes that about 3.5 feet of surcharge can occur within the connection. The following table should be used as a guide for sizing the connection.

*Max. Connection Diameter (in)	Max. 100-yr Flow (cfs)	Main Sewer Diameter (in)
6	up to 1.8	10
8	1.8 to 3.2	12
10	3.2 to 5.0	15
12	5.0 to 7.2	18 or larger

The maximum connection size will be the lesser size indicated by the 2nd or 3rd columns.
*Also see Chapter II, Section 3.4- Connection to City Sewer

APPENDIX II-E

Existing Facilities Protection

DEPARTMENT OF WATER MANAGEMENT

CITY OF CHICAGO

Department of Water Management (DWM) Sewer Requirements For Existing Facilities Protection

August 2015

1. The utility company/government agency and its contractors are responsible for the adequate protection of the existing sewers, drain connections, sewer structures and bench monuments during construction of new utilities and/or adjustment to existing utilities and the use of heavy equipment within the limits of the project.

2. It is the responsibility of the utility company/government agency and its consultants/contractors to obtain the necessary background information from the sewer unit of the DWM in meeting requirements for design drawings/contract plans and for existing facilities protection during the construction stage.

Records from the sewer unit of the DWM include: existing sewers, drain connections, sewer structures, benchmark locations, ordinance grades, age of sewer and pipe material.

When replacing curb and gutter, ordinance grades must be shown on the plan. To the extent possible, the proposed top-of-curb grades must be within 0.2 feet of the approved ordinance grade.

Copies of sewer records and benchmarks can be obtained by payment at the sewer unit of the DOB, located at City Hall, 121 N. LaSalle Street – Room 804, Chicago, Illinois 60602.

3. A permit is required from the sewer unit of the Department of Buildings (DOB) prior to the construction of, or repairs to, underground sewers, drain connections or sewer structures, including the adjustment of sewer structures and removal/replacement of frames and lids. The permit must be obtained by a drainlayer currently licensed from the sewer unit of the DOB.

4. The sewer unit of the DOB must be notified at least 48 hours in advance of construction, with the name and telephone number of the resident engineer who could be contacted for any sewer emergency.

Existing Facilities Protection
Page two

5. In order to protect City's Bench Monuments (standard and sub-standard), all bench monument locations within the limits of the project must be listed on the plan sheets. If not found or damage to the bench monuments is made or encountered, please contact the sewer unit of the DWM immediately at (312) 744-3351. Design plans must be submitted to and approved by the DWM for the replacement or relocation of any standard or sub-standard (i.e., secondary) benchmark.

6. In the relocation or construction of private or public utilities, including pipe underdrains and/or subdrains, the utility must be located as far away as possible from the City sewer and appurtenant sewer structures. The minimum desired horizontal clearance from all sewer structures is (4) feet. Clearance requirements from sewers is as follows:

Clearance from utilities other than water:
A minimum distance of the inner diameter of sewer (I.D.) plus four (4) feet must be maintained between the sewer and the utility center lines. If the outside diameter/width of utility conduit is more than the sewer O.D., a minimum of four (4) feet horizontal clearance must be obtained from the outside face to outside face. The minimum desired vertical clearance from crossing is (18) inches. If either horizontal or vertical requirements are not met, the sewer must be rehabilitated with an appropriate liner or replaced with DIP, unless prior approval is allowed by the DWM to evaluate the sewer (via televising) before and after construction.

Clearance from water:
IEPA separation requirements must be met. A minimum of ten (10) feet horizontal clearance (edge-to-edge) or eighteen (18) inches vertical clearance is required between sewer and water-mains. If the latter is met, a minimum horizontal clearance of the outer diameter of sewer (O.D.) plus (4) feet must be maintained. Sewer crossings below a water-main must have minimum vertical clearances of (6) inches. The existing sewer must be rehabilitated with a water-main quality liner or replaced with DIP for encroachments within the aforementioned limits for a distance of (10) feet from the edges of the water-main. When a sewer crosses above a water-main, no encroachments within (18) inches are allowed and the sewer must always be of water-main quality material for a distance of (10) feet from the edges of the water-main.

7. Manholes, catch basins and inlets must be protected from the entry of asphalt/debris into the sewer system during construction. The contractor must mark locations of all sewer structures on the sidewalk before starting pavement removal/replacement. Adjustment of frames and lids of sewer structures must be completed prior to street resurfacing.

8. No permanent structures are permitted over the existing sewers and sewer structures located within the public right-of-way or easement without prior approval of the DWM.

9. The DWM discourages tree plantings that are located within the outer diameter of the sewer plus 4 feet (OD+4), but if necessary, may allow tree plantings with a maximum mature height of 15 feet and a maximum mature root depth of 2.5 feet. Potential plantings that meet this requirement include the following:

   - Ornamental shrubs or bushes meeting the mature height and mature root depth discussed above.

   - Flowers or other non-wood herbaceous plants.

   - Above ground, removable planting containers that can be moved by construction equipment in the event that sewer main repair is required.

Existing trees planted above sewer mains that do not meet these requirements do not need to be removed. However, if such existing trees are removed; all trees installed in their place must meet these requirements. The recommended minimum clearance between the outside of the sewer/structure and the center of a tree is fifteen (15) to twenty (20) feet depending on the size of the sewer.

10. For the following cases, the contractor is required to conduct a pre-construction videotaped inspection prior to the issuance of a sewer permit and a post-construction videotaped inspection prior to acceptance of the sewer. The videotape must be submitted to the sewer unit of the DWM for review and approval. Should pre-construction televising indicate conditional issues with the sewer, it shall be replaced or rehabilitated prior to construction as part of the project improvement.

- Street Construction/Reconstruction Projects
- Viaduct Clearance Improvements
- Piling/Caisson Installations

The utility company/government agency or its representing contractor must maintain access to the existing sewer facilities including sewer structures at all times and coordinate the proposed improvements with the sewer unit of the DWM Engineer/Inspector to avoid any interruption of the sewer facilities maintenance or services. The sewer flow has to be maintained at all times.

12. For street reconstruction and new sewer main installations, all non-concrete catch basins and gutter boxes are to be replaced, irrespective of their condition, with new DWM standard catch basins or inlets. The only exceptions are concrete or lined catch basins that are in good condition.

For fire station and bus terminal driveway/pad reconstruction, all non-concrete structures located within in the right-of-way are to be replaced or lined, irrespective of their condition, in accordance with DWM standard structures and materials.

For other street restoration projects, the utility company/government agency or its representing contractor must coordinate with the sewer unit of the DWM to arrange for the inspection of the existing catch basins. The sewer unit of the DWM will determine the need for catch basin repair, replacement or cleaning.

13. Existing sewers to be abandoned must be removed or filled with grout and so noted on the plans. Sewers 24" in diameter and larger must be filled with grout (smaller sewers are closed with a plug, while 24" diameter and larger are closed with a bulkhead.) Within the Central Business District, all abandoned sewers must be injected with flowable fill. Flowable fill must be used instead of grout, in other locations whenever possible.

14. The following requirements must be followed in the design of new sewers and sewer structures in the ROW:

- Materials used for sewer construction must be either reinforced concrete (Type III or better), or vitrified clay pipe, or ductile iron pipe (wrapped in polyethylene wrap).

- Catch basins located within intersections must be relocated about ten (10) feet from the property line for partial street restoration or twenty five (25) feet from the property line for full street restoration to prevent conflicts with pedestrian walkways and handicapped ramps. Relocations are not permitted if it results in increasing the number of existing catch basins.

- Normally 3 pairs of catch basins are used for 600 - foot blocks and 1 to 2 pairs are used for 300 - foot blocks. Any increase in the number of existing catch basins on a block must be justified, via a grading plan.

- Wherever hydraulically beneficial, any dead-end sewers in streets crossing a proposed sewer route will be extended with an overflow connection made to the new sewer subject to approval by the sewer unit of the DWM

- In viaduct areas or streets with:

  1) Less than or equal to three (3) feet of cover, replace all sewers three (3) feet in diameter or smaller with class 52 ductile iron pipe.
  2) Less than or equal to five (5) feet of cover, replace all sewers five (5) feet in diameter or smaller with class 52 ductile iron pipe or RCP, Class V, and
  3) More than five (5) feet of cover, videotape all sewers larger than five (5) feet in diameter for lining or other rehabilitation.

15 The DWM's Rain Blocker Program must be maintained with any roadway improvement. The design of any roadway improvement must consider limiting the number of catch basins to the extent practical. The number of existing structures should not be increased.

- Flow restrictors must be installed in all catch basins outside of the Central Business District. Restrictors shall not be installed in catch basins in close proximity to viaduct areas, bus stops, or emergency entrances. The DWM must approve the non-installation or removal of any restrictor. Requirements for restrictor installation are as follows:
- Arterial Streets/Bus Routes: 3-inch orifice restrictor
- Residential Streets: 3-inch vortex restrictor
- Alleys: 3-inch orifice restrictor in the last CB.
- Closed lids are required on all manholes except at intersections where a perforated lid shall be used.

16. The minutes of the pre-construction meeting must state that a list of the DWM's, "Requirements for Existing Facilities of Protection" was provided to the resident engineer and the contractor for compliance.

17. The project plans and/or specifications must include the following notes:

Prior to start of construction, a permit is required from the sewer unit of the DOB for any underground sewer work including adjustment of sewer structures and removal/replacement of frames and lids. Permit must be obtained by drain-layer currently licensed from the sewer unit of the DOB.

The contractor is responsible for the adequate protection of the existing sewers, drain connections, sewer structures, and bench monuments during construction operations and use of heavy equipment in the limits of the project.

The contractor must locate and promptly and properly connect to the new sewers all live house drains, catch basin drains and other existing laterals, drains and sewers, of whatever nature, which are connected to the existing sewers being repaired or replaced.

Existing catch basin laterals to be reused must be rodded and flushed in the presence of the sewer unit of the DWM Inspector. A new connection to the main sewer is required if the existing catch basin lateral is not approved by the sewer inspector.

When a sewer structure is abandoned, all pipe openings must be plugged, structures filled with trench back-fill, lids and frames removed and surface restored as per the sewer unit of the DWM standards and specifications.

The contractor is required to replace any broken frames and lids of sewer structures with standard frames and lids of the DWM. In adjustment or reconstruction of sewer structures, any non-standard frames and lids must be replaced with standard frames and lids. In adjustment or reconstruction of inlets, any non-standard inlets (gutter boxes) must be replaced with DWM standard inlets.

City manholes have solid lids except at street intersections where perforated lids are used. Perforated catch basins/manholes grates with ½-inch wide slots is the current citywide standard. However, in viaduct areas, the "old" standard grates with the larger 1-1/2" wide slots must be used.

The frames and lids of sewer structures to be abandoned, removed, or filled must be salvaged and delivered to Water Management located at 3901 S. Ashland Avenue. Delivery must take place between 10:00 am and 2:00 pm Monday through Friday. Call (312) 747-1777 to arrange for delivery.

Existing Facilities Protection
Page seven

In locations where the main sewer is not being replaced and the existing drainage facilities are disturbed or damaged during construction by the contractor, it will be the contractor's responsibility to restore and replace the damaged facilities at his/her expense to the satisfaction of the DWM.

In case of any damage to the City's sewer system, private and public drain connections, and/or bench monuments, the contractor must contact the sewer unit of the DOB immediately at phone number (312) 744-3351. The contractor must, at his/her cost, replace the affected sewers, drain connections, sewer structures and/or bench monuments as necessary. The sewer flows must be maintained at all times.

Flow restrictors must be installed in all catch basins, outside of the Central Business District. Flow restrictors must not be installed in close proximity to viaduct areas, bus stops or emergency entrances. Flow restrictors are available for pick-up at the DWM's Central District, located at 3901 S. Ashland Avenue, by calling (312) 747-1777, between 7:00 am-3:00 pm, 48 hours in advance.

Upon project completion of roadway resurfacing or reconstruction, resident engineers must contact the DWM Sewer Evaluation Section at 312-747-4680 to schedule a field meeting for project acceptance (ie. address punch list items).

Upon project completion, the contractor must provide the sewer unit of the DWM, for review and acceptance, any required DVD of the sewer mains.

As-built plans of new or replaced sewers in the public right-of-way must be submitted to the DWM Sewer Design Section within 30 days after completion of the project and will be included as a punch list item prior to acceptance of the project.

The as-built plans must sealed by a Professional Engineer or Register Land Surveyor and be submitted with the form in Appendix II-A Sheet A.23. Plan and profile drawings of the sewers and sewer structures must be submitted on a compact disk in .TIF format. All electronic files must be submitted in a file folder with one file name reflecting the addresses of the project, with street name first: (e.g. Jackson St. 300-500 S.) A hard copy of the as-built plans must also be submitted.

Note: Refer to sewer unit of the DWM "Detail Specifications for Sewer Construction, Book 3" for complete requirements on sewer construction in the public way by private contractors.

APPENDIX II-F

Approved Vendor List for Custom Vortex Restrictors

City of Chicago Approved Vendor List for Custom Vortex Restrictors

	Vendor	Website Address	Contact Name	Contact Email	Phone Number	Model Type
1	Contech Engineered Solutions	conteches.com	A.J. Margetis Bob Schwartz	amargetis@conteches.com; bschwartz@conteches.com	(773) 661-9794 (847) 778-9168	Fluidic-Amp with Sleeve
2	Hydro International	hydro-int.com	Phillip Taylor	ptaylor@hydro-int.com	(608) 205-4441	Reg-U-Flo S-Type with Push-fit mount and Reg-U-Flo VM-Type

Notes:

1 Vendor, size, and model number vortex restrictor must be labeled on the Utility Plan and Operation & Maintenance Plan
2 Vendor detail of vortex restrictor must be added to a detail sheet in civil plan set
3 Provide rating curve of restrictor with calculations
4 Any vendor of vortex restrictors is welcome to submit specs for review. Upon approval of product, vendor will be added to approved list for the following year

APPENDIX III-A Outlet Capacity Maps

APPENDIX III-B CITY OF CHICAGO RAINFALL INTENSITIES

City of Chicago
Department of Water Management

Name of Project: _____
Address: _____
A/E of Record: _____

(FOR COMPUTATIONS AND REFERENCE)

City of Chicago Intensity-Duration-Frequency (IDF) Curve

(Based on Bulletin 70 Rainfall Data)

	Storm Event in Years									
	5-Year		10-Year		25-Year		50-Year		100-Year	
Storm Duration (min)	Rainfall (in)	Average Intensity (in/hr)	Rainfall (in)	Average Intensity (in/hr)	Rainfall (in)	Average Intensity (in/hr)	Rainfall (in)	Average Intensity (in/hr)	Rainfall (in)	Average Intensity (in/hr)
5	0.46	5.520	0.54	6.480	0.66	7.920	0.78	9.360	0.91	10.920
10	0.84	5.040	0.98	5.880	1.21	7.260	1.42	8.520	1.67	10.020
15	1.03	4.120	1.21	4.840	1.49	5.960	1.75	7.000	2.05	8.200
30	1.41	2.820	1.65	3.300	2.04	4.080	2.39	4.780	2.80	5.600
60	1.79	1.790	2.10	2.100	2.59	2.590	3.04	3.040	3.56	3.560
120	2.24	1.120	2.64	1.320	3.25	1.625	3.82	1.910	4.47	2.235
180	2.43	0.810	2.86	0.953	3.53	1.177	4.14	1.380	4.85	1.617
360	2.85	0.475	3.35	0.558	4.13	0.688	4.85	0.808	5.68	0.947
720	3.31	0.276	3.89	0.324	4.79	0.399	5.62	0.468	6.59	0.549
1080	3.50	0.194	4.11	0.228	5.06	0.281	5.95	0.331	6.97	0.387
1440	3.80	0.158	4.47	0.186	5.51	0.230	6.46	0.269	7.58	0.316
2880	4.09	0.085	4.81	0.100	5.88	0.123	6.84	0.143	8.16	0.170
4320	4.44	0.062	5.18	0.072	6.32	0.088	7.41	0.103	8.78	0.122
7200	4.91	0.041	5.70	0.048	6.93	0.058	8.04	0.067	9.96	0.083
14400	6.04	0.025	6.89	0.029	8.18	0.034	9.38	0.039	11.14	0.046

Appendix E

2016 Stormwater Management Ordinance Manual

City of Chicago

Stormwater Management Ordinance Manual

January 2016

Dept. of Water Management
Thomas H. Powers, PE
Commissioner

City of Chicago
Rahm Emanuel
Mayor

City of Chicago
Stormwater Management Ordinance Manual

Use of this Manual

This Manual has been prepared to be used in conjunction with:

- *Chapter 11-18 Stormwater Management of the Municipal Code of Chicago, and*
- *The Department of Water Management Regulations for Sewer Construction and Stormwater Management*

Updates and Revisions

Updates or revisions to the Regulations and Manual may be available. Please check for any available updates by going to: www.cityofchicago.org/water to check the Department of Water Management website and following these links:

(Under Featured Services and Programs) click Sewer Regulations

Table of Contents

Use of this Manual i
Updates and Revisions i
Table of Contents ii
Foreword iv

1.0 General Policies and Procedures 1
1.1 Introduction 1
1.2 The Need for Stormwater Management 1
1.3 Stormwater Management Policy 2
1.4 Development Review Process 3
1.5 Design Responsibilities 4
1.6 Applicability of Performance Standards 4

2.0 Flow Rate Control: Managing Stormwater Leaving the Site 7
2.1 Introduction and Applicability 7
2.2 Design Requirements 7
2.3 Allowable Release Rate 8
2.3.1 Standard Maximum Release Rate 9
2.3.2 Computed Maximum Release Rate 10
2.3.2.1 Outlet Sewer Capacity 10
2.3.2.2 Critical Local Sewer Capacity 10
2.3.3 Special Requirements 12
2.3.3.1 Flow Diversions 12
2.3.3.2 Multiple Sewer Connections 13
2.3.3.3 Dry Weather Flows 13
2.3.3.4 Unrestricted Areas 14
2.3.4 Lot-to-Lot Buildings 14
2.3.5 Side Gutters or Significant DWF 14
2.3.6 Open Space Discharging to Combined Sewers 15
2.3.7 Direct Discharge into Waters 15
2.3.8 Building Rehabilitation 15
2.4 Detention Design Requirements and Calculation Methods 15
2.4.1 Restrictors 22
2.4.2 Calculation of Storage 22
2.4.3 Stormwater Capture Facilities 22
2.4.4 Residential Land Uses 22
2.4.5 Commercial/Industrial/Public Land Uses 23
2.5 Rate Control BMPs 23
2.5.1 Conveyance Structures 23
2.5.2 Detention Structures 24

3.0 Volume Control: Managing Stormwater Onsite 26
3.1 Introduction and Applicability 26
3.2 Design Requirements and Calculation Methods 26
3.2.1 Practicability of Infiltration BMPs 27
3.2.1.1 Geotechnical Investigations 28
3.2.1.2 Underdrains 35
3.2.2 Drainage Areas and Volume Control 35
3.2.3 Direct Discharge to Waters 35
3.2.4 Alternative Volume Control Measures 35
3.2.4.1 Reduction of Impervious Areas 35
3.2.4.2 Extended Stormwater Detention 36
3.3 Volume Control BMPs 36
3.3.1 Volume Control BMPs 36

4.0 Erosion and Sediment Control 41
4.1 Introduction and Applicability 41
4.2 General Requirements 42
4.3 Submittal Requirements 42
4.3.1 Development Sites Discharging to Combined Sewers 42
4.3.2 Developments Discharging to Waters 43

5.0 Operation and Maintenance Requirements 45
5.1 Introduction and Applicability 45
5.2 General Requirements 45
5.2.1 Owner Information 45
5.2.2 Site Map 45
5.2.3 O&M Practices 46
5.2.4 Implementation Schedule 46
5.2.5 Employee Training 47

References 48

Appendices

A. DOB Plan Review Checklist

B. Hydrologic Analysis Methods

C. BMP Guidesheets

D. Case Studies

Foreword

The City of Chicago (City) is committed to protecting, conserving and managing our water wisely. The City has developed “Chicago’s Water Agenda 2003” (Water Agenda) to encapsulate its goals for water management in the City and to outline its strategies for accomplishing these goals. As the quote below from the Water Agenda shows, one of the City’s main concerns is stormwater management.

”When it rains, some of the stormwater that falls in our neighborhoods soaks into the ground and some flows into the City’s sewer system. With more and more hard surfaces, such as rooftops and roadways, there are fewer and fewer places where rain water can infiltrate the soil, nourish plants and remain part of the natural system. Without green space to absorb it, the sewer system is required to handle more and more water. Stormwater sent to our sewers is no longer available to irrigate our lawns or recharge groundwater. Further, when the sewer system becomes full it discharges into our waterways. The City’s Department of Water Management spends approximately $50 million per year to clean and upgrade 4,400 miles of sewer lines and 340,000 related structures. Additionally, the City acknowledges the importance of the Tunnel and Reservoir Plan, known as Deep Tunnel, in the long-term management of stormwater. However, the City believes that the “built” infrastructure alone will not meet all of our needs for managing wastewater and stormwater. Managing stormwater and protecting the quality of our water resources will require a combination of upgrading our “built” infrastructure and creating a “green” infrastructure. Through this green infrastructure, the City will demonstrate forward thinking ways to reduce the burden on our sewer system and keep stormwater in the environment.” (City of Chicago, 2003).

The Water Agenda details many steps that the City has taken to address stormwater management issues. First, it has begun promoting green building design and best management practices (BMPs). By encouraging applicants to obtain Leadership in Energy and Environmental Design (LEED) certification and incorporate BMPs into design plans, the City hopes to reduce impacts from stormwater runoff. Second, the City has taken steps to prevent polluted stormwater from roadways from discharging directly into Lake Michigan and the Chicago and Calumet Rivers. The reconstruction of Wacker Drive was designed to divert first-flush stormwater from the roadway to sewage treatment facilities. Third, the City has also developed a sewer inlet control system called the “Rainblocker Program” to reduce combined sewer overflows and reduce basement flooding. Wherever appropriate, residents are asked to disconnect their downspouts from the sewer system and allow the downspouts to drain instead onto permeable surfaces such as lawns. The City is also working to comply with National Pollutant Discharge Elimination System (NPDES) Phase II requirements. Primarily, the City has focused on stormwater control areas, such as areas relying on separate storm sewers and riparian areas that allow stormwater to flow directly into water bodies.

Within the context of this broader push for improved stormwater management, the City recently passed its “Chicago Stormwater Management Ordinance” (Ordinance). The Ordinance applies to certain types of new developments and redevelopment and requires specific practices to ensure that stormwater is responsibly managed in accordance with the goals of the Water Agenda. The purpose of this “Stormwater Manual” (Manual) is to help applicants understand and comply with the Ordinance and accompanying Chapter III “Requirements for Stormwater Management” of the “Regulations for Sewer Construction and Stormwater Management” (Regulations).

1.0 General Policies and Procedures

1.1 Introduction

This Stormwater Manual (Manual) was created for developers, engineers and architects preparing development plans in the City of Chicago. The goals of the Manual are to provide the technical tools and guidelines necessary to comply with the Stormwater Ordinance and Chapter III of the Regulations for Sewer Construction and Stormwater Management.

This Manual addresses a set of best management practices (BMPs) to control the stormwater-related impacts of development and redevelopment in the City. Stormwater BMPs should be understood and incorporated into development designs because they efficiently achieve both development and environmental goals in the most cost effective manner.

1.2 The Need for Stormwater Management

The impacts from development occur both during construction and after the development is complete. The conversion of pervious land to impervious surfaces results in increased rate and volume of stormwater runoff, reductions in groundwater recharge and reduction of evapotranspiration. These new impervious surfaces change the hydrologic characteristics of the landscape by reducing infiltration into the soil and the evapotranspiration from vegetation (See Figure 1).

Figure 1. The Hydrologic Cycle

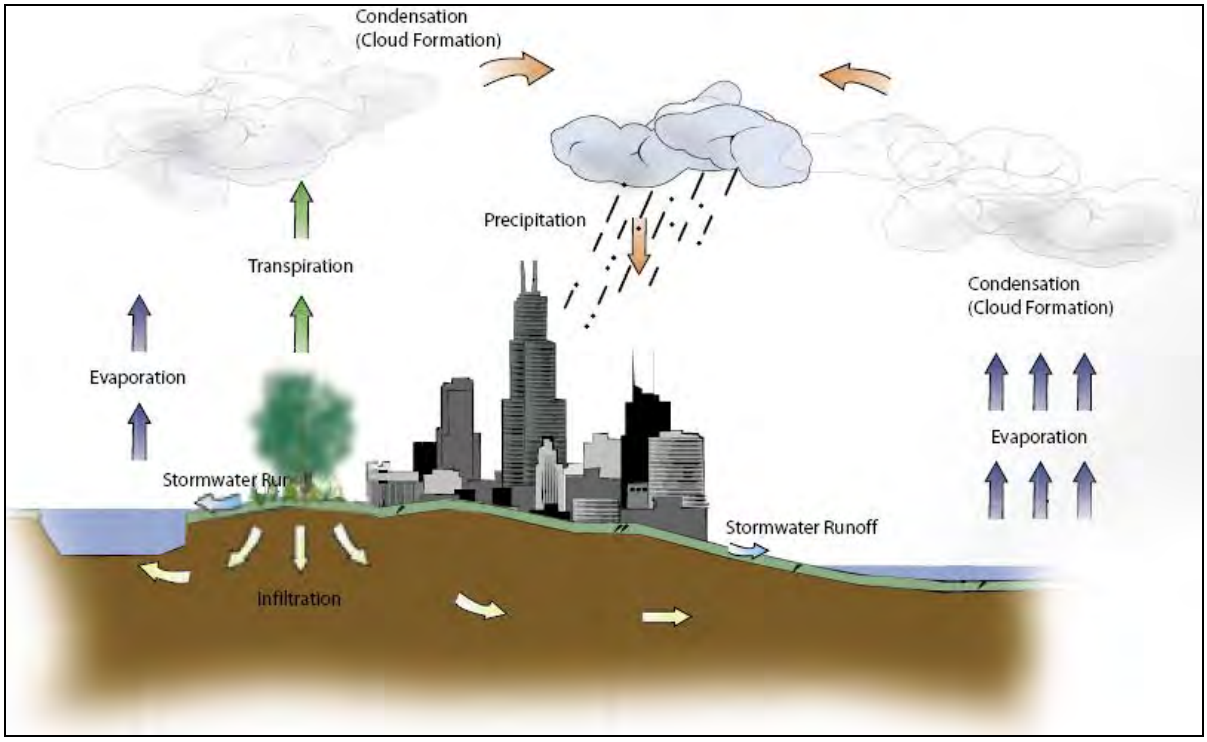

The result of development is a dramatic increase in the rate and volume of precipitation that runs off the landscape as stormwater. New impervious surfaces, compaction of soils, and loss of native vegetation reduces the amount of precipitation that infiltrates into the ground. Without adequate stormwater management controls, this can create additional burden for a sewer system that may already be experiencing flooded conditions and combined sewer overflows. In areas served by combined sewers, flooding or surcharged sewers can lead to basement backups and combined sewer overflows. Uncontrolled, the impacts of development on stormwater runoff can lead to increased flooding, combined sewer overflows, degraded water quality, stream channel erosion, hydrologic modifications, and destruction of sensitive habitats and landscapes. Properly designed and implemented stormwater management facilities can prevent these unacceptable impacts. The Ordinance includes the following provisions to mitigate the impacts of new development.

Rate Control – Provisions for controlling the rate of stormwater discharge ensure that new regulated developments release stormwater at a rate consistent with the capacity of the City's sewer system. This prevents negative impacts such as sewer surcharging, basement backups, street flooding, or combined sewer overflows as a result of new development.

Volume Control – Provisions controlling of the volume of stormwater ensure that new regulated developments capture and retain a portion of the runoff that is generated. This reduces the hydrologic modification effects of new development, recharges groundwater and provides water quality benefits. Volume control can help prevent sewer flooding and combined sewer overflows, as well as reduce the volume of runoff that is sent for wastewater treatment.

Sedimentation and Erosion Control – There is clear evidence from around the country that watershed urbanization has adverse impacts on the ecologic integrity and beneficial uses of downstream water bodies. Some impacts result from the direct modification or destruction of streams, lakes, and wetlands. Other impacts occur due to uncontrolled erosion from construction activities. Erosion during construction can generate enormous quantities of sediment that leads to water quality impairment, clogging of sewers, loss of floodwater conveyance and storage, and safety and nuisance problems. In order to avoid these problems, the Ordinance includes provisions for sedimentation and erosion control.

1.3 Stormwater Management Policy

It is the policy of the City to encourage and promote programs that:

- Minimize the negative stormwater impacts of new development and redevelopment.
- Protect and conserve land and water resources in conjunction with orderly and responsible property development;
- Prevent pollution of local waters, groundwater, and land;
- Minimize stormwater flows into the combined sewer system by minimizing impervious surfaces, promoting infiltration or discharging to local waters where appropriate;
- Preserve the natural characteristics of stream corridors in order to moderate flood and stormwater impacts, improve water quality, reduce soil erosion, protect aquatic and riparian habitat, provide recreational opportunities, provide aesthetic benefits, and enhance community and economic development;

- Preserve the natural hydrologic and hydraulic functions of watercourses, flood plains, and wetlands;
- Facilitate existing and future intergovernmental agreements for stormwater management; and
- Manage stormwater on the site of a Regulated Development to the fullest feasible extent.

To achieve these goals, the primary stormwater management objectives for development sites are to (1) reduce impervious areas, (2) capture stormwater on site, and (3) either use or retain the stormwater on site for evaporation and absorption into the ground. Stormwater that is not used or retained, may be discharged into a City-owned combined sewer, storm sewer, or open waterway.

1.4 Development Review Process

The City desires applicants to plan their developments thoroughly and has set up a review process to allow applicants to design developments that satisfy both the City's and applicant's objectives. For any work outside the public right-of-way, the review process will be handled by the Department of Buildings (DOB) for the Department of Water Management (DWM).

Developments that are subject to the requirements of the Chicago Stormwater Management Ordinance and Regulations must submit design documentation directly to DOB. The function of DOB is to review, collect fees and issue permits for any construction activity, either in private property or in the public way. In some cases (as identified in this Manual), it may be helpful or required to conduct a pre-application meeting. The initial site plans, Stormwater Management Plan (SMP), Stormwater Spreadsheet Tool and all other supporting documentation must be submitted to DOB at the following address.

Department of Buildings
City Hall, Room 906
121 N. LaSalle Street
Chicago, Illinois 60602

The applicant must meet the requirements of all City building and zoning codes and any applicable federal and state permit requirements. In addition to DWM/DOB review and approval, the development may require permits or approvals from other local, state and federal agencies, including, but not limited to, the following:

- City Departments:
  - Department of Planning and Development
  - Department of Transportation
- Chicago Park District
- Metropolitan Water Reclamation District of Greater Chicago
- Illinois International Port District
- Illinois Environmental Protection Agency
- Illinois Department of Natural Resources – Office of Water Resources
- Illinois Department of Transportation
- U.S. Army Corps of Engineers.

The applicant is responsible for obtaining the required approvals and permits from all agencies with jurisdiction over the development.

1.5 Design Responsibilities

This Manual discusses minimum design recommendations and provides information to assist the designer in complying with the Ordinance and Chapter III of the Regulations. When unusual circumstances or complex problems arise, the applicant and applicant's designer (engineer, wetland specialist, surveyor, or landscape architect) are responsible for identifying such conditions and notifying the appropriate review agencies. In such cases, the applicant and applicant's designer shall propose an alternative solution consistent with good planning, engineering practices, and scientific principles, and the designer or applicant shall obtain approval of the change from DWM/DOB before continuing with the design. Use of this Manual or issuance of a permit does not release the designer from design responsibilities.

This Manual is not intended to specify limitations on the creative design process. Designers have flexibility in devising solutions, however, the City must approve the final SMP. The analytical procedures and techniques presented herein are consistent with available data and principles of hydrology as they are currently understood. Procedures selected for use by the City are from commonly used and recognized sources. Manual users are responsible for the integrity and design of the various facilities proposed.

1.6 Applicability of Performance Standards

All regulated developments are subject to the Ordinance and Regulations, however the applicable performance requirements vary depending on various aspects of the development. A Regulated Development (Ordinance 11-18-020) is:

> *Any construction activity, excavation or grading, commencing on or after January 1, 2008, that:*
>
> *(a) disturbs a land area or substantially contiguous land areas of 15,000 or more square feet in the aggregate. Land areas separated by public right-of-way at the conclusion of development shall not be deemed "substantially contiguous" to each other for purposes of this definition. For purposes of calculating square footage pursuant to this paragraph (a), "land area" shall include twenty-five percent of the square footage of the sidewalls of a building that directly connects to the sewer system via side gutters, and shall also include any average dry-weather flow based on a conversion rate of 1.0 cfs (cubic feet per second) into one acre (43,560 square feet), or*
>
> *(b) creates an at-grade impervious surface of 7,500 or more substantially contiguous square feet, or*
>
> *(c) results in any discharges of stormwater into any waters or separate sewer system. For purposes of this definition, square footage shall be calculated based upon the project as a whole, regardless of whether construction proceeds in phases.*
>
> *A Regulated Development shall not include projects located entirely within the public right-of-way at the conclusion of development. With respect to a project located both on the public*

right-of-way and on private property at the conclusion of development, that portion of the project located on the public right-of-way will not be included in calculating the square footage thresholds of subparagraphs (a) and (b) of this definition. If a project includes Residential Development, the Residential Development will not be included in calculating the square footage thresholds of subparagraphs (a) and (b) of this definition.

Flow rate control requirements may apply to regulated developments discharging to combined sewers, separate sewers, and open water bodies. Any at-grade impervious open space where more than 7,500 square feet of substantially contiguous area will be created, reconstructed or resurfaced (scarified with bituminous or concrete overlay) or disturbs over 15,000 SF of land area, rate control measures are required. Rate control is not required for projects that directly discharge to Lake Michigan, but all other stormwater performance standards apply to these projects. Volume control requirements apply to all regulated developments except for new roofs on a vertical building addition. Table 1-1 provides a summary of the applicable performance requirements

Table 1-1: Performance Standards Applicability

Developments Discharging to Combined Sewers					
		Rate Control	Volume Control		
				Options Available	
Proposed Activity	Regulated under Stormwater Management Ordinance	Required	Required [1]	Storage	Reduce Imperv. by 15%
Residential Development[5]	No	-	-	-	-
Creates, reconstructs or resurfaces at-grade impervious area of less than 7,500 SF	No	-	-	-	-
Creates, reconstructs or resurfaces at-grade impervious area of 7,500 SF or more	✓	✓	✓[3]	✓	✓
Disturbs land areas of 15,000 SF or more	✓	✓	✓[3]	✓	✓
New roof for vertical building addition (plus sidewall and additional DWF) equivalent to 15,000 SF or more	✓	✓[2]	No	-	-

Developments Discharging to Waters					
		Rate Control	Volume Control		
				Options Available	
Proposed Activity	Regulated under Stormwater Management Ordinance	Required	Required [1]	Storage	Reduce Imperv. by 15%
Residential Development[5]	No	-	-	-	-
Creates, reconstructs or resurfaces at-grade impervious area of less than 7,500 SF	✓	No	✓	✓	-
Creates, reconstructs or resurfaces at-grade impervious area of 7,500 SF or more	✓	✓[4]	✓	✓	-
Disturbs land areas of 15,000 SF or more	✓	✓[4]	✓	✓	-
New roof for vertical building addition (plus sidewall and additional DWF) equivalent to 15,000 SF or more	✓	✓[2, 4]	No	-	-

Notes:

1. Additional exceptions (airport surfaces, Industrial NPDES permitees) apply (see Ordinance 11-18-040)
2. Only requires delay or decrease in peak discharge from the roof.
3. Only if site is >15% impervious.
4. If site drains to Lake Michigan, there is no rate control requirement.
5. For the purposes of the Stormwater Ordinace, Residential Development is defined as detached single-family and two-family dwellings.

2.0 Flow Rate Control: Managing Stormwater Leaving the Site

2.1 Introduction and Applicability

As permeable areas in the City are developed, water from precipitation events cannot be absorbed. During severe storm events, water runs off rooftops and streets into the sewer system. If uncontrolled, the high rate at which water enters the system creates basement backups and combined sewer overflow problems. During severe storms, water flows into the sewer system at a rate exceeding the system's capacity and bypassing treatment. This allows raw sewage to discharge directly to water bodies and creates water quality problems. To combat these problems, the City requires new developments to limit the flow rate of stormwater leaving a site. The rate control performance standards are designed to prevent flow from reaching the sewer system at a rate that is faster than the sewer can carry it away. Flow rate control is accomplished by implementing onsite stormwater detention. Detaining water on site or slowing it down as it leaves the site helps to prevent many of the problems discussed above. It also ensures that new developments do not negatively impact the existing sewer system. When older properties without stormwater detention are redeveloped, the performance of the existing system is actually improved.

Applicants will typically use the maximum allowable release rate and the Modified Rational Method to calculate the maximum volume of stormwater that must be contained by detention. For small sites (less than ½ acre), the ability to control the maximum stormwater discharge rate may be limited by the minimum allowable restrictor size. The Modified Rational Method is not appropriate for development sites greater than 20 acres or at sites where complex flood routing schemes are proposed. In these cases, the Applicant should conduct a pre-application meeting with DOB to discuss the appropriate analysis methods. Under such circumstances, DOB may require a hydrograph-producing modeling approach with regional rainfall data to determine stormwater detention and release rate requirements.

2.2 Design Requirements

The Ordinance includes the following requirements related to rate control:

> *Stormwater Drainage Systems shall manage the peak rate of discharge from the Regulated Development, incorporating the maximum permissible release rate. Provided, however, that Developments that create an at-grade impervious surface of less than 7,500 substantially contiguous square feet and that directly discharge to waters shall not be subject to the rate control requirements of this subparagraph (a)(1).*

The Ordinance requires that no more than 400 square feet of impervious surface area be allowed to sheet flow to the public right-of-way without detention. A minimum of 0.1 feet of freeboard from the high-water level within any detention facility to the overflow invert to the right-of-way must be provided. A development must have an overland flow path which safely conveys the 100-year storm event to the public right-of-way. There must be at least 0.1 feet of freeboard between the overland flow route high water level and the low grade to adjacent properties.

An overland flow route could be pavement or grass that can be approximated as a trapezoidal channel. The flow route can be designed to meet the freeboard requirements by using the calculated overflow for the 100-year storm event and Manning's equation shown below.

$Q = 1.486\ A\ R^{2/3}\ S^{1/2}/n$
Where,
Q = hydraulic capacity (in cfs)
A = area (channel cross section) (in sf)
R = Hydraulic Radius, A(Area)/P(wetted perimeter)
S = slope of channel (in ft/ft)
n = Manning's Coefficient which generally ranges from 0.03 to 0.05 for grass lined channels

Another option would be to design the overland flow route to act as a broad-crested weir.

The depth of flow for the overland flow route must meet the freeboard requirements in the Regulations. Velocities through the overland flow route should be checked to assure that erosion will not occur. If there is the possibility of erosion during the 100-year storm event, then appropriate erosion protection measures must be included.

2.3 Allowable Release Rate

Table 2-1 presents a summary of information on the allowable release rates and storage requirements for various categories of developments.

Table 2-1 Rate Control for Regulated Developments

Regulated Development Type	Key Rate Control Requirements
Development ≤ 1.75 acres	Allowed to use standard release rates from Standard Maximum Release Rate Chart. (Section 2.3.1)
Development > 1.75 acres	Applicant must compute allowable release rate based on downstream sewer capacity. (Section 2.3.2)
Lot to Lot	Rate control for the 10-year storm must be provided for roof surfaces. Remaining areas (less than 15 percent of site or it is not considered a lot to lot development) must provide storage for a minimum of the 100-year event. (Section 2.3.4)
Buildings with Multi-Level Roofs and/or Side Gutters	When multi-level roofs or side gutters catch runoff from sidewalls, 25 percent of the face of the critical sidewall must be considered as drainage area. This also includes multiple level roofs that collect runoff from the sidewalls above them. (Section 2.3.5)
Significant Dry Weather Flow (DWF)	If average DWF exceeds 10% of the maximum allowable release rate then it is considered significant and the maximum allowable release rate must be reduced accordingly. If necessary, a minimum value of 25 gpm must be used as the release rate to determine the required storage. A pump storm discharge rate of 25 gpm may be required if the total proposed discharge rate from the site exceeds the existing discharge for a 5-year storm event. (Section 2.3.5)
Open Space Discharging to Combined Sewers	When over 75 percent of the site is substantially contiguous at-grade open space and conducive to ponding water, the

	release rate shall not exceed 0.75 cfs/acre. (Section 2.3.6)
Direct Discharge to Waters	Roof areas do not require detention when directly discharged to Waters (as defined in section 11-18-20 of the Ordinance). To the extent possible, the maximum release rate for non-roof areas discharging directly to Waters is 1.0 cfs/acre for the 100-year event. To the extent possible, sites larger than 5 acres must not exceed existing release rates for up to the 10-year event (Section 2.3.7)
Building Rehabilitation	When the project only involves roof replacement exceeding 15,000 SF over new additional stories, provisions must be made to delay or decrease the peak discharge. (Section 2.3.8)
Residential Land Use	In certain cases, required storage may be provided within the right of way. (Section 2.4.4.)

2.3.1 Standard Maximum Release Rate

Small developments (between 7,500 and 76,230 square feet) may use a release rate based on the Standard Maximum Release Rate Chart (Figure 2-1). However, these sites are not precluded from using the methodology presented in 2.3.2 to compute a site specific release rate based on the capacity of the downstream sewer. Other requirements may apply if the development is one of the specialized types listed in Table 2-1 or discussed in Sections 2.3.3 through 2.3.7.

The vortex restrictors referenced below are designed to fit into an 8-inch diameter pipe and limit flow to either 0.15 cfs (3-inch opening) or 0.25 cfs (4-inch opening). Both sizes are available for purchase from the DWM. The standard maximum release rates according to the Regulations are below.

- *For sites between 7,500 square feet and 21,780 square feet (one-half acre), the maximum allowable release rate is 0.15 cfs, the maximum release rate from a 3-inch vortex restrictor. The required storage is based on 0.15 cfs subject to Chapter 2, Section 3.5 – Dry Weather Flows.*
- *For sites between 21,780 square feet (one-half acre) and 43,560 square feet (one acre), the maximum regulated release rate is a linear interpolation between 0.15 cfs (equivalent to use of 3-inch restrictor on a one-half-acre site) and 0.25 cfs (equivalent to use of 4-inch restrictor with 0.25 cfs release rate on a one-acre site), respectively. The required storage is based on the linear interpolation of the two release rates, subject to Chapter 2, Section 3.5 – Dry Weather Flows.*
- *For sites between 43,560 square feet up to 76,230 square feet, the maximum allowable release rate is 0.25 cfs, the maximum release rate from a 4-inch vortex restrictor. The required storage is based on 0.25 cfs, subject to Chapter 2, Section 3.5 – Dry Weather Flows.*

Figure 2-1 Standard Maximum Release Rate

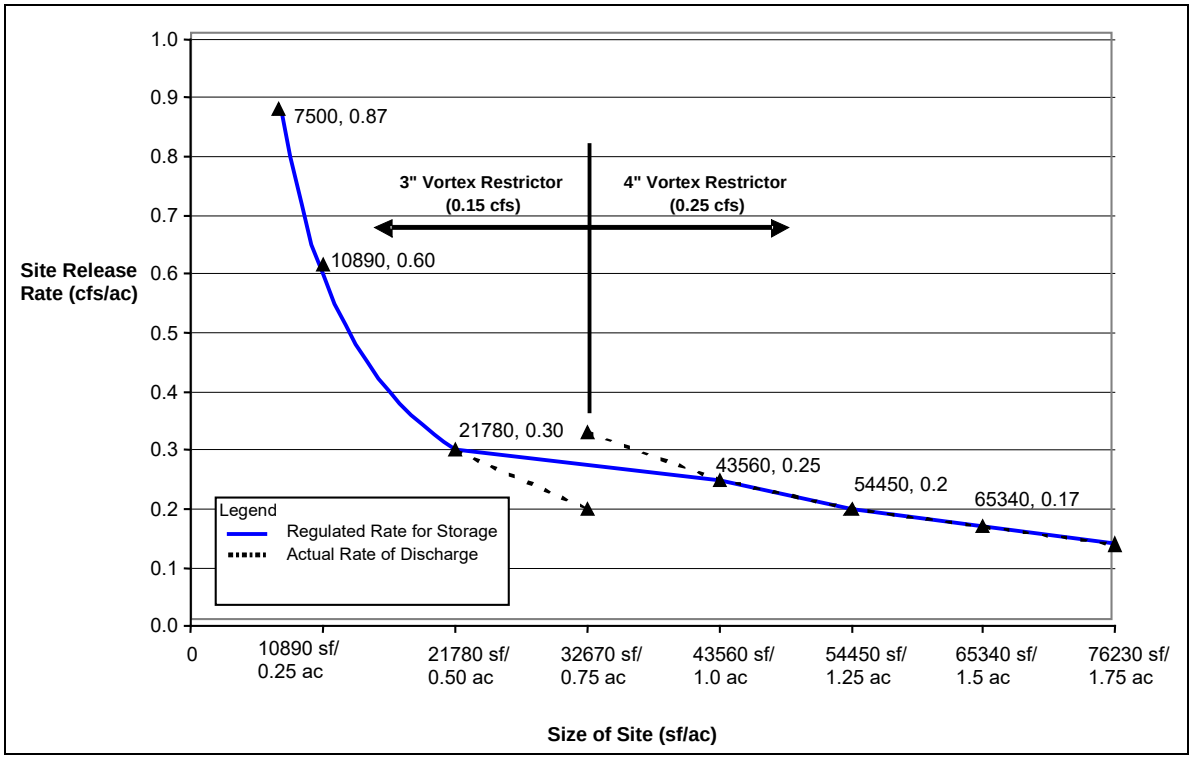

2.3.2 Computed Maximum Release Rate

In lieu of the standard maximum release rate, any regulated development may compute the maximum allowable release rate based on the lesser of two computations, the "Outlet Sewer Capacity" and the "Critical Local Sewer Capacity." The lesser of these two sewer capacities (provided in cfs/acre) must be multiplied by the size of the disturbed area that is tributary to the restricted control structure to compute the maximum allowable release rate. Developments that exceed 76,230 SF are required to compute the maximum allowable release rate in this manner. The outlet sewer capacity is the 5-year capacity of a sewer line based on the ratio of its estimated capacity to its corresponding tributary area. The critical local sewer capacity is the ratio of the most restrictive sewer segment's 5-year full flow capacity divided by the respective drainage area adjusted for land use. The following sections describe each computation.

2.3.2.1 Outlet Sewer Capacity

Appendix III-A of the Regulations contains the outlet sewer capacity map and tables based on the latest available information. The outlet sewer that serves the proposed development is located on the appropriate map and table in the Regulations. The capacity of that outlet sewer is provided on the table in cfs/acre. This capacity in cfs/acre multiplied by the development size in acres yields the maximum release rate in cfs based on the outlet sewer capacity. This value should be recorded for comparison with the critical local sewer capacity to determine which is more restrictive.

2.3.2.2 Critical Local Sewer Capacity

The local sewer capacity calculations are only limited to those developments that are connecting to local sewer segments 3.5 feet or smaller. If a development connects directly to a sewer larger than 3.5 feet, then only the outlet sewer capacity is needed to determine the maximum release rate.

For the critical local sewer capacity calculations, the drainage area upstream of the development must be delineated and assigned land uses. The procedure for delineating the drainage area and assigning a land use is detailed in Section 3.4.2 of the Regulations. The drainage areas must be based on Sewer Atlas Maps and Drain Atlas Maps which can be obtained from the City through DOB. Land uses are determined by multiplying the appropriate weighting factor to the land use drainage area as detailed in Chapter III, Part 3.4.2 of the Regulations. It should be noted that the development's land use and drainage area must be included in the overall drainage area calculation for the main sewer line at the development's connection point.

The local sewer capacity in cfs/acre is defined in Section 3.4.3 of the Regulations and must be calculated for each consecutive downstream main sewer segment from the first sewer segment of the development to the last sewer segment equal to 3.5 feet in diameter (or first segment larger than 3.5 feet if there is no 3.5-foot diameter sewer) or the downstream end of a sewer line. This is completed by first computing the hydraulic capacity of the local sewer segment by utilizing Manning's equation or if necessary, a pressure flow equation which are both shown below

Q is solved for using: $Q = KS^{1/2}A$

Q = hydraulic capacity (in cfs)
K = flow conveyance
S = slope between manholes (in ft/ft)
A = area (pipe cross section) (in sf)

The flow conveyance (K) is calculated by using the following formula:

$K = 1.486R^{2/3}/n$

R = Hydraulic Radius, A(Area)/P(wetted perimeter)
n = Manning's Coefficient and is dependent on pipe material.
If pipe diameter is 21 in or less (material is VCP) then n = 0.011
If pipe diameter is 24 in. and larger (Dimensions on Sewer Altas Map in inches are concrete) and material is concrete then n = 0.013
If pipe diameter is 24 in. and larger (Dimensions on Sewer Atlas Map in feet are brick) and material is brick then n = 0.015

A sewer segment comprises of a sewer line of the same size and material. The slope (S) is calculated for a sewer segment by selecting the upstream and downstream invert elevations within two end manholes. If any needed invert elevations on the Sewer Atlas are absent, the invert elevation in question should be interpolated from those available. There may be other manholes between the two selected manholes. If this is true, then flattest slope between the two selected manholes within the segment should be used. The manhole inverts and pipe lengths are used to solve for S as shown below:

S = (Invert Upstream Manhole– Invert Downstream Manhole)/Length

The area (A) depends on the pipe diameter. The hydraulic capacity, Q (in cfs), calculation is performed on pipes of the same material and diameter. Generally, it can be assumed that the pipe(s) between the upstream and downstream manholes are of the same diameter and material. If there are no survey or invert elevations on the Sewer Atlas Maps to utilize Manning's Equation, then it may be assumed that the sewer flows at a velocity of 3.0 feet/second.

If a sewer segment has a zero or negative slope, then a pressure flow equation may be used to determine Q. This method may also be considered if the existing sewer in question has more than 11.0 feet of ground cover. The pressure flow equation will not be accepted in any other cases. The following assumptions can be made in the pressure flow analysis:

1. Basement drain level is the ordinance grade less 5 or 6 feet (in upstream areas)
2. The sewer outfall is full plus 1 to 2 foot of surcharge
3. Sewer segment of main may be used to set L (in feet)

The following formula is solved for the velocity (V) in feet/second:

$$\Delta H = [1 + K_c + (29\ n^2\ L)/R^{1.33}][V^2/2g], \text{ in feet}$$

The parameters are as follows:

L = Total Pipe Length
R = Hydraulic Radius
$K_c = 0.5$
n=Manning's coefficient
$2g = 64.4\ ft/sec^2$
ΔH = Upstream Head – Downstream Head
Upstream Head = Upstream Ordinance Grade – Basement Drain Level
Downstream Head = Downstream Pipe Invert + Pipe Diameter + Surcharge

After V is calculated, the following formula is used to solve for flow:

Q = VA, (in cfs)
where A is the cross sectional area of the sewer segment (in sf).

In order to complete the local sewer capacity analysis, the total weighted drainage areas to each local sewer segment must be calculated. The total drainage area will increase in value with each additional sewer segment downstream of the development. The local capacity of a sewer line (in cfs/acre) is obtained by the ratio of the sewer segment's capacity (Q) divided by the respective drainage area adjusted for land use (in acres). The critical local sewer capacity, as defined in Section 3.4.4 of the Regulations, is the sewer segment with the lowest cfs/acre from the development to the last sewer segment equal to 3.5 feet in diameter (if available) or the downstream end of the sewer line. Typically, the critical local sewer capacity can be found at the downstream end of a sewer line, but each upstream sewer segment to the point of the development's connection should be examined to determine the critical section. An example of the maximum release rate computations for critical local sewers is presented in Appendix D.

2.3.3 Special Requirements

The following special requirements must be considered for the determination of the maximum release rate.

2.3.3.1 Flow Diversions

Requirements for any proposed flow diversions are provided in Chapter II, Part 3.6 of the Regulations. A flow diversion occurs when an existing connection to a main sewer line is relocated to another main sewer line that is not within the same drainage area of the original main line, or if a new source of water is introduced into the line. If the existing connections to a site are unknown, it will be assumed that an existing connection was made to the street where the majority of the site's frontage

is situated. A flow diversion is created whenever flow is redirected from existing conditions. . In general, flow diversions should be avoided whenever possible. A site that has been vacant and without any structure for over 10 years will be considered a flow diversion upon development. However, in some cases, a flow diversion may be beneficial by increasing the capacity of a sewer line with poor capacity (less than 0.3 cfs/acre), while reducing it slightly in another with excess capacity (over 1.0 cfs/acre). When proposing a flow diversion, the critical local sewer capacity (discussed in 2.3.2.2 must be determined for both the original sewer line and the proposed diversion line. The requirements for flow diversions are waived for sites less than 0.5 acres or if the connection to a larger sewer is mandated.

2.3.3.2 Multiple Sewer Connections

Requirements for connections to the sewer system are provided in Chapter II, Part 3.4.2 and Chapter III, Part 3.5.1 of the Regulations. The number of connection(s) required is generally a function of the size of the site. The number of new connections to the City's main sewer shall be limited whenever possible to avoid the extra time and cost of construction within the street. Except for developments that are less than 0.5 acres or which adopt the standard maximum release rate, all multiple connections require an alternative analysis.

To determine the optimum split in flow, an alternative analysis must be performed. The alternatives analysis must demonstrate that the selected alternative will maximize use of the sewer system, thereby optimizing the hydraulic benefit to the surrounding neighborhood. At least two alternatives must be examined. At no time can the proposed release rates exceed the existing release rate at the site. For developments that do not meet these criteria or that are over 5.0 acres, the DWM/DOB may require an additional alternative of upgrading sewers within the right-of-way.

Separate rate control worksheets should be completed for each connection to the sewer system.

2.3.3.3 Dry Weather Flows

The maximum allowable release rate for stormwater may need to be reduced to compensate for undetained dry weather flow (DWF). When the average DWF (without peaking factor) exceeds 10 percent of the maximum allowable release rate, then peak discharge rate from the site must be reduced accordingly to offset 90 percent of the DWF, or to a minimum value of 25 gpm, whichever is greater. A pump station discharge of 25 gpm will be required if the total proposed discharge from the site exceeds the existing discharge.

The average DWF (without peaking factor) can be computed by the anticipated per capita load and land use of the development. The following table can be used as a guide for this purpose.

Land Use	Average Gallons per Capita-Day (gpcd)
Hospitals (per bed)	250
Hotels (2.0 per room w/ laundry)	150
Single Family (3.5 persons)	100
Muti-Family	80
Condominium	75
Hotel (2.0 per room w/o laundry)	60
Boarding Homes	50
Factories (excluding process water)	35
Convention Center/Airports	5

Reference: Estimated Numbers Based on IEPA Title 35, Subtitle C, Part 370-170, Appendix B

DWF is also converted to equivalent site area for determining whether or not a development is a regulated development. The conversion is 1.0 cfs of DWF equates to 1.0 acre of disturbed site area (See 2.3.5).

When the dry weather flows are routed to the combined sewer using a combined connection with the stormwater management system, the designer must ensure that surcharging of the connection will not cause interior flooding. For this computation, both the peak DWF and peak stormwater flow should be used.

The DWF (with peaking factor) should be based on the number of fixture units (FTU), reference the Municipal Building Code, Table 18.29-1108.1. The conversion from the number of fixture units to drainage area (sf) to peak DWF (cfs) is as follows:

Drainage area = [(FTU – 150) * 7.2] + 4850 sf

Peak DWF = Drainage Area / 43,560 sf/acre * 1.0 cfs/acre

Average DWF = Peak DWF / 3

2.3.3.4 Unrestricted Areas

The maximum allowable release rate must be adjusted to account for any unrestricted areas of the site beyond the allowed 400 sf impervious area and 1,500 sf pervious area. The discharge penalty will be calculated as follows. The unrestricted area minus the 400 sf or 1500 sf allowable area must be used to generate a 100-year discharge (Q) using the Rational Method, Q = CIA, with an intensity corresponding to the appropriate time of concentration. This discharge must be subtracted from the maximum allowable release rate for the site.

2.3.4 Lot-to-Lot Buildings

Lot-to-lot developments present special challenges due to the need for detention storage for the roof surface. Any development where structures or buildings (defined as building footprint at ground surface or foundation wall footprint whichever is greater) occupy more than 85 percent of the site area may be considered a lot to lot development. In these cases, storage for a minimum 10-year event must be provided for the building area. Remaining areas on the site that are not part of the structure must still provide detention storage for the 100-year event. In these cases, two rate control worksheets will be needed, one for the building area and a second for the remainder of the site, with the allowable release rate divided proportionally between the building and site areas. The entire site must be designed to safely accommodate peak flows for the 100-year event. Peak flows are computed using the rational method. Hydraulic capacity calculations should be shown for all stormwater management features responsible for conveying the 100-year peak flow from the building. Storage vaults under buildings with less than 100-year capacity must provide documentation that pipes and foundations can withstand hydrostatic surcharge pressure in the event of a 100-year storm.

2.3.5 Buildings with Tributary Sidewalls or Significant DWF

Several factors may increase the effective size of the development for purposes of regulation. Buildings with multi-level roofs and/or side gutters discharging to the sewer must include 25 percent of the critical face of the sidewall from which flow is being captured as part of the drainage area. Multi-level roofs collect runoff from the sidewalls above them.

Dry weather flow (DWF) (without peaking factor) must also be included as an equivalent area based on a conversion rate of 1.0 cfs to one acre. Once these additional areas are accounted for, the regulatory status of the site may be determined.

2.3.6 Open Space Discharging to Combined Sewers

Sites with more than 75% of substantially contiguous at-grade open space that is conducive to surface ponding shall not have a maximum release rate of greater than 0.75 cfs/acre, unless the minimum practical release rate of 0.15 cfs is reached. If such a site discharges to Waters, then the maximum release rate of 1.0 cfs/acre may be used.

2.3.7 Direct Discharge into Waters

In order to maximize the available capacity of the City's sewers, sites adjacent to Waters must discharge directly to those Waters.

> *For Developments that discharge stormwater directly to Waters, the maximum release rate shall be 1.0 cfs/acre for at-grade open space. There is no release rate requirement for roof areas (without vehicular parking or waste storage) of any onsite buildings, provided the roof areas bypass the Development's stormwater detention system.*
>
> *Any development over 5 acres with existing discharge to a waterway shall not exceed the existing discharge rates, to the extent possible, for all storm events up to a 10-year, including any new roof areas. All overflow pathways from the stormwater management system must be directed towards the waterway.*

When both the open areas and direct discharge to waters conditions apply, the allowable release rate for direct discharge to waterways takes precedent over the open areas release rate requirement.

2.3.8 Building Rehabilitation

Building rehabilitations become a regulated development when any new roof areas (proposed over additional stories) and/or additional DWFs (converted to equivalent area) exceed 15,000 square feet. When this occurs, the peak discharge to the sewer system must be delayed or decreased. This may be accomplished by disconnecting existing downspouts, installing controlled roof drains or green roof systems. If the project does not involve any at-grade improvements, then no other rate control, volume control or erosion and sediment control performance requirements apply. An Operation and Maintenance plan should still be prepared if the proposed improvements warrant it.

2.4 Detention Design Requirements and Calculation Methods

The Ordinance and Regulations require stormwater detention in new regulated developments to limit peak flow rates. Maximum allowable stormwater release rates are determined as discussed in Section 2.3 of this Manual. Once a release rate has been determined, the required detention storage may be computed.

The **Stormwater Spreadsheet Tool** (available electronically) includes a number of spreadsheets that have been prepared to assist the applicant in preparing a SMP submittal. This tool was designed for simple and straightforward sites. Complex site designs may require calculations to be presented in a custom format to facilitate reviews. Included with the **Stormwater Spreadsheet Tool,** is the Release Rate spreadsheet (Figure 2-2), Orifice Sizing spreadsheet (Figure 2-3) and the Rate Control Spreadsheet (Figure 2-4) that is based on the Modified Rational Method and uses the City's rainfall

intensity values, the land use information for the site, and the maximum allowable release rate to determine the required storage. Once this information is entered into the spreadsheet (either manually, or by answering a series of questions about the site) the critical storm is determined as the storm duration with the highest storage volume on the spreadsheet (critical storm). Applicants will have to run the calculation to reflect the active drainage area to each outfall or connection to the City sewer system.

The Modified Rational Method determines the maximum storage volume required to detain water from a storm of any duration or intensity up to the 100-year storm event. The calculation of flow detention volume is based on the assumption that the storm has a small time of concentration (Tc) for a project site, which essentially implies that peak runoff is generated almost instantaneously and is maintained as a constant throughout the duration of the storm. This assumption is justified for most development sites less than 20 acres in size in the City. In most cases, the Modified Rational Method in conjunction with the Chicago rainfall intensity curve (see Appendix B) yields lower storage requirements than hydrograph methods; therefore, for the purposes of calculating detention volume, the City will ignore the effect that BMPs have on slowing the Tc on the peak flow rate calculated using the Modified Rational Method. However, the City encourages the use of BMPs to reduce impervious areas and the resulting lower runoff coefficients (C-values) or credit received for BMP storage reduce the required detention volume.

DWM/DOB may require that the applicant use alternative methods for calculating the required detention volume such as hydrograph methods with regional rainfall data for larger or more complex sites. Appendix B discusses the Modified Rational Method and other hydrologic analysis methods for determining required detention volumes. Offsite flow can be bypassed around the site's stormwater drainage system provided it can be done safely via a driveway and effectively with adequate drainage capacity in the right-of-way. If any offsite flows are routed through the detention system, it must not overflow to the public right-of-way for storms up to and including the 25-year event. This may require additional onsite storage to accommodate the bypass flow. The standard **Stormwater Spreadsheet Tool** is not equipped to handle bypass flow computations. Supplemental and detailed computations must be submitted to the document the stormwater management system's design.

The City has grouped land types together into different categories according to their perviousness, or ability to absorb and retain water and has assigned C-values to each land type, as shown in the Spreadsheet. All applicants performing rate control calculations for submittal to the City must determine how much area of the proposed development site falls into each land category. Each land type is described below. No other land types will be accepted in calculations submitted to the City. The applicant should use best professional judgment in assigning land types within a drainage area to one of these categories.

- Lawns, Sandy–Land consisting of lawns with known sandy areas underneath, slopes vary
- Lawns, Heavy – Land consisting of lawns with heavy clay soils, slopes vary
- Woodlandss – Land that has trees whose canopy completely covers the ground
- Native Vegetation – Areas with prepared soils and planted with native deep-rooted vegetation
- Dry bottom detention basins– dry bottom detention basins up to the high water level
- Wetland – Land that is wet with standing vegetation except open water areas

- Gravel – Primarily gravel-covered land (such as a gravel parking lot)
- Pavement
- Roofs
- Wet bottom detention basins or ponds – wet bottom detention basins up to the high water level (HWL) or area of ponds
- BMPs– Best Management practices are specifically computed based on the design of the BMP and how the designer wishes to treat them for computational purposed. The **Stormwater Permit Application Worksheet** helps the designer complete this process.

Figure 2-2 Release Rate Spreadsheet

City of Chicago
Department of Water Management

Name of Project: _____
Address: _____
A/E of Record: _____

0.0 Release Rate

Step 1: Sewer Capacity of Each Sewer Segment

Sewer Segment:	Segment 1	Segment 2	Segment 3	Segment 4	Segment 5	Segment 6
Street Name:						
Upstream End (street name):						
Downstream End (street name):						
Upstream Invert (ft):						
Downstream Invert (ft):						
Pipe Segment Length (ft):						
Pipe Slope (S):						
Pipe Characteristics:						
Pipe Size (in):						
Pipe Area (sq ft):	0.0000	0.0000	0.0000	0.0000	0.0000	0.0000
Wetted Perimeter (ft):	0.0000	0.0000	0.0000	0.0000	0.0000	0.0000
Hydraulic Radius (ft):						
Roughness Coefficient (n):						
Flow Conveyance (K):						
Manning's Equation:						
Velocity (fps):						
Hydraulic Capacity (cfs):						

Roughness Coefficient (n):
VCP: use 0.011, typical for pipe <= 21 in
RCP: use 0.013, for pipe >=24 in when pipe size shown on atlas in inches
brick sewer: use 0.015, for pipe >=24 in when pipe size shown on atlas in feet

Step 2: Tributary Area to Each Sewer Segment

	Segment 1			Segment 2		
Total Tributary Area (ac):		Adj. Factor	Adjusted Area		Adj. Factor	Adjusted Area
Residential Area (ac):	0.00	1.0	0.00	0.00	1.0	0.00
Commercial Area (ac):		1.3	0.00		1.3	0.00
Industrial Area (ac):		1.5	0.00		1.5	0.00
		Total Adjusted Area:	0.00		Total Adjusted Area:	0.00
	Segment 3			**Segment 4**		
Total Tributary Area (ac):		Adj. Factor	Adjusted Area		Adj. Factor	Adjusted Area
Residential Area (ac):	0.00	1.0	0.00	0.00	1.0	0.00
Commercial Area (ac):		1.3	0.00		1.3	0.00
Industrial Area (ac):		1.5	0.00		1.5	0.00
		Total Adjusted Area:	0.00		Total Adjusted Area:	0.00
	Segment 5			**Segment 6**		
Total Tributary Area (ac):		Adj. Factor	Adjusted Area		Adj. Factor	Adjusted Area
Residential Area (ac):	0.00	1.0	0.00	0.00	1.0	0.00
Commercial Area (ac):		1.3	0.00		1.3	0.00
Industrial Area (ac):		1.5	0.00		1.5	0.00
		Total Adjusted Area:	0.00		Total Adjusted Area:	0.00

Note: Total tributary areas entered for segments 1 through 6 must include the cumulative tributary area for each segment. All upstream tributary areas must be included.

Step 3: Determine Release Rates of Each Segment

	Segment 1	Segment 2	Segment 3	Segment 4	Segment 5	Segment 6
Release Rate (cfs/ac):						

Critical Local Sewer Capacity (cfs/ac): 0.00

Step 4: Compare Outlet Sewer Capacity and Determine Release Rate

Name of Outlet Drainage Basin (as shown on the map): _____
Outlet Sewer Capacity (cfs/ac): _____

Maximum Allowable Release Rate (cfs/ac): 0.00

Figure 2-3 Orifice Sizing Spreadsheet

City of Chicago
Department of Water Management

Name of Project: _____
Address: _____
A/E of Record: _____

1.3 Orifice Sizing

		Type Yes or No	Notes
Question 1:	Does the design include Oversized Detention with an associated reduction in the allowable release rate?		

This worksheet is used to size the appropriate diameter orifice in a steel plate. See Sewer Detail A-34. This worksheet takes the allowable release rate from Tab 1.0 (typically) or Tab 2.1.9 (for Oversized Detention), and sizes an orifice to provide this peak discharge rate.

This worksheet is not applicable when a vortex restrictor is specified.

General Formula: $Q = C_d A(2gh)^{0.5}$

Where: C_d = 0.61 for sharp-edged plate bolted to a catch basin
C_d = 0.82 for pipes less than 2 feet long grouted into sewer

1	Orifice Description:		Orifice Plate	
2	Discharge	Q		cfs
3	Discharge coefficient	C_d	0.61	unitless
4	100 Year HWL	HWL		feet
5	Upper Invert of Half-Trap:			feet
6	Calculated Head	h	0.00	feet

7	Diameter:	d		inches

Figure 2-4 Rate Control Spreadsheet

City of Chicago
Department of Water Management

Name of Project: _____
Address: _____
A/E of Record: _____

1.0 Rate Control (Sheet 1 of 2)

Step 1: Runoff Calculation

		Proposed Area (sq. ft.)	C-Value 100-Year	Storage Volume (cu. ft.)
Pervious Land	Lawns - Sandy soil, flat, 0% to 2%		0.18	
	Lawns - Sandy soil, avg, 2% to 7%		0.27	
	Lawns - Sandy soil, steep, >7%		0.36	
	Lawns - Heavy soil, flat, 0% to 2%		0.30	
	Lawns - Heavy soil, avg, 2% to 7%		0.42	
	Lawns - Heavy soil, steep, >7%		0.47	
	Woodlands, flat, 2%		0.39	
	Native Vegetation with prepared soils		0.10	
	Dry bottom basins to HWL		0.75	
	Wetland		0.80	
	Green Roof		0.50	
Impervious Land	Gravel		0.70	
	Pavement		0.95	
	Roofs (conventional)		0.95	
	Building sidewalls connected by side gutters (enter 25% of the face of the sidewall)		0.95	
	Wet bottom basins to HWL		1.00	
BMP areas	BMPs providing storage that WILL COUNT toward detention storage (from Worksheet 1.2)	0	1.00	
	BMPs providing volume control storage that WILL NOT BE COUNTED toward detention (from Worksheet 1.2)	0	Storage Provided will be used to factor the adjusted C-value in Cell D38	0

Summary	Total pervious area (sq ft)	0
	Total impervious area (sq ft)	0
	Total BMP area (sq ft)	0
	Total site area (sq ft)	0
	Weighted C- value (non BMP areas)	0.00
	Adjusted C-value (accounts for BMPs)	0.00
	Notes:	*Make note of any adjustments made for purposes of detention calcs here (such as removal of roof area that will discharge directly to Waters)*

Step 2: Allowable Release Rate Assessment

		Type Yes or No for all that apply	Notes
Question 1:	Does the site drain directly to Waters?		
Question 2:	Does the site only include residential land use?		
Question 3:	Is the Regulated Development a Lot to Lot Buillding (85% or more of site footprint is occupied by buildings)?		
Question 4:	Do you plan to use the standard maximum release rate (only available to sites less than 1.75 acres)?		
Question 5:	Is the site more than 75 percent of substantially contiguous at-grade open space that is conducive to ponding of surface waters (Answer "No" if site discharges to waterway or is a service station)?		
Question 6:	Does the development involve flow diversions (existing sewer connection to be relocated to a different main) or multiple sewer connections (only available to sites over 1.75 acres)?		
Question 7:	Are there widespread contaminated soils on the site, high ground water table, or is this development classified as a lot-to-lot building?		

City of Chicago
Dept. of Water Management

Permit Applicaiton

1.0 RATE CONTROL
Page 1

Figure 2-4 Rate Control Spreadsheet (cont.)

City of Chicago
Department of Water Mangement

Name of Project: _____
Address: _____
A/E of Record: _____

1.0 Rate Control (Sheet 2 of 2)

Step 3: Achieving Rate Control Measures

Unadjusted Detention Release Rate =	0.000	cfs	Waiting for Answer to Question 1 and 4	0.000
Dry Weather Flow Rate = (From dry weather flow worksheet)	0.000	cfs	Waiting for Dry Weather Flow worksheet to be completed	
Infiltration Facility Release Rate (to be added to eligible release rate when computing required storage)	0.000	cfs	No BMPs with infiltration beds entered on BMP Summary Worksheet or soil's infiltration rate is less than 0.5 in/hr	
Release rate for detention storage computations:	**0.000**	cfs		
Required Storage Volume =	0	cubic feet		

Detention Storage Calculations
(Based on Bulletin 70 Rainfall Data)

STORM EVENT (5,10,25,50 or 100) = 100

Allowable release rate 0.000 cfs

Storm Duration (minute)	Runoff Coefficient C	Rainfall Intensity (in/hr)	Drainage Area A (acres)	Inflow Rate Q=CIA	Total Storm Vol (cf)	Release Rate Qo (cfs)	Storage Rate (Qi-Qo) (cfs)	Storage Volume Rate (Qi-Qo)*t*60 (cf)
5	0.00	10.920	0.00	0.00	0	0.000	0.00	0
10	0.00	10.020	0.00	0.00	0	0.000	0.00	0
15	0.00	8.200	0.00	0.00	0	0.000	0.00	0
30	0.00	5.600	0.00	0.00	0	0.000	0.00	0
60	0.00	3.560	0.00	0.00	0	0.000	0.00	0
120	0.00	2.235	0.00	0.00	0	0.000	0.00	0
180	0.00	1.617	0.00	0.00	0	0.000	0.00	0
360	0.00	0.947	0.00	0.00	0	0.000	0.00	0
720	0.00	0.549	0.00	0.00	0	0.000	0.00	0
1080	0.00	0.387	0.00	0.00	0	0.000	0.00	0
1440	0.00	0.316	0.00	0.00	0	0.000	0.00	0
2880	0.00	0.170	0.00	0.00	0	0.000	0.00	0
4320	0.00	0.122	0.00	0.00	0	0.000	0.00	0
7200	0.00	0.083	0.00	0.00	0	0.000	0.00	0
14400	0.00	0.046	0.00	0.00	0	0.000	0.00	0
							Required Detention Volume (cf)	0

Note: 1) the calculation assumes that the rising and recessing limb of inflow and outflow hydrograph are vertical

City of Chicago
Dept. of Water Management

Permit Applicaiton

1.0 RATE CONTROL
Page 1

2.4.1 Restrictors

Restrictors or flow restricting outlets limit the outflow rate from detention facilities to allowable release rates. For all practical purposes, any outlet from a detention basin is “flow restricting” or else detention could not be provided. Key considerations in the design of the detention outlet are clog protection and hydraulic control. Clog protection can be achieved by using submerged orifices in catch basins or other permanent pools. Where applicable, one of the City’s standard vortex restrictors should be used to control the discharge rate. The minimum allowable plate orifice size is 2.5 inches in diameter. For more restrictive flow rates, the City’s standard 3-inch (0.15 cubic-foot-per- second [cfs]) or 4-inch (0.25-cfs) vortex restrictors can be used. These restrictors require an 8-inch diameter receiving pipe for proper installation in a catch basin.

The design plans should show the location of all restrictors used on the sites and a detail should be provided for each flow restricting device. All restrictors must be installed in catch basins or manholes with at least a 2-foot sump. Restrictor calculations should show that the maximum allowable release rate is not exceeded at the design stage of the detention facility. Maintenance access must be provided for all flow-restricting outlets.

For sites that combine sanitary sewage and stormwater downstream of a restrictor, the design must incorporate means to prevent sanitary sewage from flowing backward through the restrictor into the detention system. The recommended method would be to combine the storm sewer and sanitary sewer in a manhole in which the invert of the sanitary sewer is at least 0.2 feet below the invert of the storm sewer draining from the restrictor.

2.4.2 Calculation of Storage

Calculations substantiating the volume of storage provided by detention structures must be provided. For detention basins or parking lot storage, the frustum of cone equations must be used as follows.

Volume = (H/3)*(A1+A2+SQRT(A1*A2)), where H=depth of storage and A= areas between the depth.

Average end area method must be used for irregular topography or for street storage. Dimensions of structures such as vaults or oversized pipes may be used to calculate storage. When storage is to be provided within an aggregate, the void ratio of that aggregate must be documented. Void spaces within in-situ material cannot be counted toward storage.

2.4.3 Stormwater Capture Facilities

The City encourages the capture of water for reuse in irrigation. Up to 10 percent of a detention facility may be set aside for capture and reuse of the water. These detention facilities will be partitioned in a manner that allows for seasonal capture of water. The partition must include a valve or gate that allows for a freely draining condition during months when irrigation water cannot be used. It must also include an overflow connection placed below the design HWL to ensure that the detention basin operates as intended under the design event. The irrigation system must be capable of using all water stored in the reuse partition within 14 days of capture. The Operations and Maintenance Plan for the development must include provisions for ensuring that water is used within 14 days and that explain the seasonal operation of any valves or gates.

2.4.4 Residential Land Uses—Right-of-Way Storage

When proper site and roadway grades permit, a regulated development for residential purposes may utilize right-of-way storage (subject to the restrictions in Chapter III, Part 3.7.1 of the Regulations) as

part of the required detention storage volume. The 100-year high water level must still meet the 0.1 foot freeboard requirement for adjacent properties (Chapter III, Part 3.1 of the Regulations). Also, onsite storage must still be provided for a minimum of the 5-year storm event.

2.4.5 Commercial/Industrial/Public Developments

All detention storage must be contained within the proposed development, right-of-way storage is not allowed.

2.5 Rate Control BMPs

Drainage features of a development site usually consist of two components: (1) conveyance structures such as storm sewers or ditches for moving stormwater from one location to another and (2) detention structures such as basins to temporarily store water and reduce the rate of flow discharging from a development site. Detention structures usually require the use of a flow-restricting outlet to meet the allowable discharge rate. The choice of a particular design for stormwater detention may be influenced by available site area, cost, and constructability. The City would like to encourage the use of the non-structural BMPs described below (expanded descriptions in Appendix C) comply with the Ordinance. This includes use of ditches, swales and natural channels to convey stormwater when possible. Use of these BMPs will result in a lower C-value and smaller required detention volumes as well as smaller required volume control storage. It is recognized that in some cases the use of elements such as oversized pipes or vaults may also be necessary. Design elements and BMPs that can be used to comply with the Ordinance are listed below.

Conveyance Structures

Combined Sewers
Ditches, Swales, and Natural Channels
Storm Sewers

Detention Structures

Detention Basins
Detention Vaults (may also be designed for infiltration)
Oversized Pipes
Parking Lot Detention
Rooftop Detention

The City has prepared a design guidesheet (see Appendix C) for detention structures. Each design element and BMP is discussed below.

2.5.1 Conveyance Structures

Most development sites will require conveyance structures such as combined sewers; drainage swales; and storm sewers to move stormwater from one location to another. These drainage features are discussed below.

Combined Sewers

Combined sewers are the most common sewer system available in the City. They are designed to accept both stormwater and sanitary system waste. As described in the sections above, significant sanitary system flows (dry weather flow - DWF) should be included in the determination of the maximum allowable release rate from a site.

Ditches, Swales, and Natural Channels

Runoff can be conveyed through a constructed channel (such as a ditch or swale) or a natural channel. When feasible, constructed channels should be unlined and vegetated. Swales are open-channel drainageways used as an alternative to conventional storm sewers. Swales and ditches can convey high flows more economically than pipe systems and may be especially useful when designing to accommodate the 100-year flow. If at all possible, natural drainageways should be preserved as part of the development's drainage system.

Storm Sewers

Storm sewers convey site runoff to a downstream receiving structure such as a swale, ditch, detention basin, natural stream or a City sewer. Storm sewers are designed as "minor" drainage systems for small storm events of up to the 5-year storm event (20-percent-annual-chance storm); however, overland flow paths should be designed for storm events including the 100-year storm event (1-percent-annual-chance storm). Onsite storm sewers and any overland flowpaths must be designed to prevent overflow to adjacent properties for storm events up to the 100-year event. Storm sewers do not provide any water quality benefits and in fact can contribute to the greater peak flows observed in developed watersheds. Storm sewers may be chosen instead of swales or ditches for stormwater conveyance based on land availability, maintenance issues, cost, and public safety issues.

2.5.2 Detention Structures

Detention structures include detention basins, detention vaults, oversized pipes, parking lot detention, and rooftop detention. Key considerations in the choice of the design element to use are available space, cost, maintenance issues, and safety considerations.

Detention Basins

Detention basins are depressions that temporarily store stormwater and release it gradually to a downstream drainage system. Wet detention basins are designed to permanently retain water and can be made to appear manicured or naturalized. Dry detention basins are designed to drain completely between storms. They may also be designed to provide infiltration and storage below the outlet elevation to satisfy volume control requirements. When discharging to waterways or storm sewers, wet detention basins are preferable to dry detention basins because of their effectiveness in removing runoff pollutant loads, especially suspended solids. In order to achieve optimum pollutant removal efficiency, the basin inlet and outlets should be located hydraulically as far apart as possible to prevent "short circuiting" and to increase the retention time. In addition to providing pollutant removal, detention basins can be designed to be aesthetically pleasing and to provide recreational benefits.

Detention basins may be naturalized to incorporate features such as plunge pools, stilling basins, variable topography to lengthen low flow pathways, and native upland buffer and wetland plantings. Detention basins that incorporate these features can replicate some of the flood storage, water quality and habitat benefits provided by natural systems such as wetlands, lakes or ponds. Naturalized detention basins may be created on almost any site, but the provision of wetlands may be constrained by site hydrology and soil conditions. Constructed wetland detention basins are feasible in areas with a high water table or relatively impermeable soils. In some cases, it may be possible to provide detention within an existing degraded wetland area by developing a plan to rehabilitate the area. In addition to reducing peak flows, wetland detention basins are very effective in removing

pollutant loads. The principal advantages of stormwater wetlands are their ability to prevent settled pollutants from resuspending and washing out during subsequent storms and their ability to remove dissolved pollutants and organic matter through biological processes. High-quality wetlands should not be used to treat stormwater.

Detention Vaults

Detention vaults are usually precast reinforced concrete tanks constructed below grade. They are provided with restrictors to limit release rates. Most vaults permanently retain water in order to dissipate energy, settle out large solids particles, and act as an oil separator. However, the provision of an open bottom to encourage infiltration in areas of permeable soil is also an option. This option may be used to satisfy volume control requirements but above-ground naturalized infiltration facilities are preferred. Detention vaults are appropriate for development sites where space is limited or surface ponding is not feasible.

Oversized Pipes

Oversized pipes are designed like storm sewers. Oversized pipes serve as both detention and conveyance structures. They are very commonly used at small developments to fulfill detention requirements. To serve as a storage structure, the oversized pipe requires a flow restrictor at the downstream end of the pipe to limit the capacity of the sewer outlet to the required release rate. In this way, when inflow into the sewer is greater than the release rate, stormwater is “stored” in the pipe behind the restrictor. Oversized pipes offer a feasible alternative to detention basins when a site has limited space; however, oversized pipes do not provide volume control or water quality benefits.

Parking Lot Detention

Parking lot detention are facilities where some or all of the storage is provided on the pavement surface. Parking lots can be significant sources of runoff pollutants and these areas are often directly connected to the storm drain system. Reducing the paved surface area in parking lots and incorporating BMPs such as bioinfiltration, permeable pavement or filter strips into the parking lot design can reduce runoff volume and pollutants discharges from the site. Parking lot detention can be designed to receive overflow from BMPs during intense storms or to pond to a certain depth and then overflow into downstream BMPs. City regulations allow up to 12 inches of water to be ponded directly on the parking lot surface with the owner’s consent. The Operations and Maintenance Plan must identify or describe any surface ponding areas that will be over 10 inches in depth.

Rooftop Detention

Rooftop detention consists of either an enclosed chamber or a constructed ponding area designed to fill with stormwater during large storm events, slowly releasing it over a number of hours. There are numerous components to these systems. Drain inlet pipes convey stormwater into a detention chamber, which accumulates stormwater during a storm event. An orifice structure or outlet drainpipe restricts the flow out of the detention chamber, allowing it to fill up and slowly drain out. Rooftop detention does not provide water quality or volume control benefits.

3.0 Volume Control: Managing Stormwater Onsite

3.1 Introduction and Applicability

The Ordinance requires control of the volume of runoff from a site. The following sections discuss how to implement volume control measures. The volume of stormwater leaving a site can be reduced by permanently retaining the water on site so that it can percolate into the ground or evaporate into the air. The City encourages developments to treat stormwater as a resource rather than diverting it off site as quickly as possible. Volume control can be achieved by reducing the imperviousness of a site (if not discharging to Waters), or by installing BMPs that enhance the onsite retention and absorption of water. BMPs are discussed in detail in Appendix C.

3.2 Design Requirements and Calculation Methods

The Ordinance includes the following requirements related to volume control:

> *Stormwater drainage systems shall reduce the volume of runoff from a Regulated Development by one of the following measures:*
>
> *(A) Capture one-half inch of runoff from all impervious surfaces in accordance with volume control BMPs; or*
>
> *(B) For Developments that do not directly discharge to Waters or to a municipal separate storm sewer system, achieve a fifteen-percent reduction in impervious surfaces from existing conditions.*
>
> *The volume control requirements of a Plan shall not apply to the following:*
>
> *(1) Developments that do not directly discharge to Waters or to a municipal separate storm sewer system and that will upon completion of development have less than fifteen percent impervious surfaces.*
>
> *(2) Developments consisting of surfaces at an airport that are intended for aircraft operation.*
>
> *(3) Developments taking place at any facility that is operating under a permit issued pursuant to the National Pollution Discharge Elimination System, 40 C.F.R. Part 122, as amended, for industrial or municipal discharges.*

As part of the **Stormwater Management Permit Worksheet**, the City has developed a **Volume Control Spreadsheet** (Figure 3-1) to aid the applicant in determining the required volume of storage or the reduction in imperviousness needed for volume control. The spreadsheet is divided into three sections. The first step tabulates basic information on the site such as total site area, total pervious and impervious areas, and imperviousness percentages. For each drainage area on the site, the square footage of land cover present in existing and proposed conditions is entered. Step 2 provides a summary of the volume control storage required, or the site imperviousness which much be achieved. Step 3 documents the answers to three feasibility questions related to the implementation of infiltration based BMPs. The third step summarizes information on the available options to satisfy the volume control requirement.

Figure 3-1 Volume Control Spreadsheet

City of Chicago
Department of Water Management

Name of Project: _____
Address: _____
A/E of Record: _____

2.0 Volume Control

Step 1: **Runoff Calculation**

		Existing Area (sq ft)	Proposed Area (sq ft)
Pervious Surface or Land Cover not Counted as Impervious for Volume Control Calculations	Bare Earth		
	Lawn or Landscaped Areas		
	Woodlands		
	Wetland		
Impervious Land	Gravel		
	Pavement		
	Roofs (conventional)		
	Water (including Wet Bottom Basin to HWL)		
BMPs	Green Roof	-	
	Permeable Pavement	-	
	Bioinfiltration	-	
	Swales	-	
	Stormwater Trees	-	
	Roof Runoff Planters	-	
	Filter Strips	-	
	Dry Bottom Basins to HWL	-	
Summary	Total pervious area (sq ft)	0	0
	Total impervious area (sq ft)	0	0
	Total BMP areas treated as impervious area (sq ft)	-	0
	Total BMP areas treated as pervious area (sq ft)	-	0
	Total site area (sq ft)	0	0
	Imperviousness percentage (%)	0.0	0.0

Step 2: **Volume Control Assessment**

		Type Yes or No for all that apply	Note
Question 1:	Does the site drain directly to Waters?		
Question 2:	Are infiltration BMPs allowable? (See Chapter III Sections 4.1.2 of the Regulations.)		
Question 3:	Do you wish to use permeable pavement only as a pervious surface to achieve impervious surface reduction goal?		

Step 3: **Achieving Volume Control Measures**

Achieve I. or II. below in accordance with the Ordinance.

I.	Capture 0.5" of runoff from impervious surfaces. Storage required =	0	cubic feet	Go to spreadsheet 2.1 BMP Volume Summary if electing volume control storage option
or, II.	Reduce proposed imperviousness to:	-	percent	

3.2.1 Practicability of Infiltration BMPs

For use of infiltration-based BMPs, the Applicant must demonstrate that subsoil infiltration rates are 0.5 inches per hour or greater. Section 3.2.1.1 describes the steps and techniques that can be used to determine the design infiltration rate. The high groundwater table must be at least 2 feet below the bottom of all proposed infiltration BMP. If connected to a combined sewer system, the high water table must be at least 3.5 feet below the bottom of the infiltration BMP. The bottom of the infiltration BMP is considered the lowest grade which is excavated prior to the placement of aggregate or prepared soils that will be used for storage and infiltration.

Care should be taken to also ensure that infiltration BMPs are not employed in areas that could lead to water quality contamination. Chapter III, Part 4.1.2 of the Regulations details areas where infiltration BMPs are not allowable.

Also, sites that could be potential water quality hotspots should identify how the proposed BMPs will function in the context of the proposed development. Any special measures required onsite to prevent water pollution should be identified in the SMP. Sites with these concerns could include auto recycler facilities and junk yards; commercial laundry and dry cleaning; commercial nurseries; vehicle fueling stations, service and maintenance areas; toxic chemical manufacturing and storage; petroleum storage and refining; public works storage areas; railroads and rail yards; heavy manufacturing and power generation; metal production, plating and engraving operations; waste transfer and hazardous waste handling facilities, sites on subsurface material such as fly ash known to contain mobile heavy metals and toxins.

3.2.1.1 Geotechnical Investigations

An important factor to consider when designing an infiltration-based BMP is the infiltration rate of water into the soil at the development site. If a site utilizes a subsurface infiltration BMP or detention storage BMP designed for infiltration, then soil boring information must be submitted. Developers should consult the soil type map shown in Figure 3-2 for an initial idea of the permeability of soils in the area of the proposed development. Soil borings will provide the next level of detail regarding expected soil permeability. If sand or loamy sand is found, then detailed infiltration tests are not necessary but are still encouraged. Infiltration rates vary locally and should be tested prior to finalizing the design for an infiltration based BMP. Testing should follow the procedures described below or the applicable ASTM standards such as D3385-03, which can be found on the Internet at http://www.astm.org/.

Site evaluation is required before an infiltration system can be designed. The site evaluation process for determining the optimal location of an infiltration system should be a three-step procedure. The process entails: 1) performing the initial screening of the site; 2) obtaining soil borings; and 3) field testing of infiltration rates. All results must be summarized as part of the stormwater management plan (SMP) and submitted as part of the development submittal.

Step 1: Initial Screening

The initial screening identifies the potential locations for infiltration practices within a development. The screening process is used to evaluate infiltration capability of a site and to determine the number and location of field tests. The following information should be provided in the site evaluation phase.

1. Site topography from the site-specific survey of the existing property.
2. Existing soils data based on Figure 3-2.

This information should be included in the SMP as described in Step 4.

Figure 3-2 Chicago Soils Map

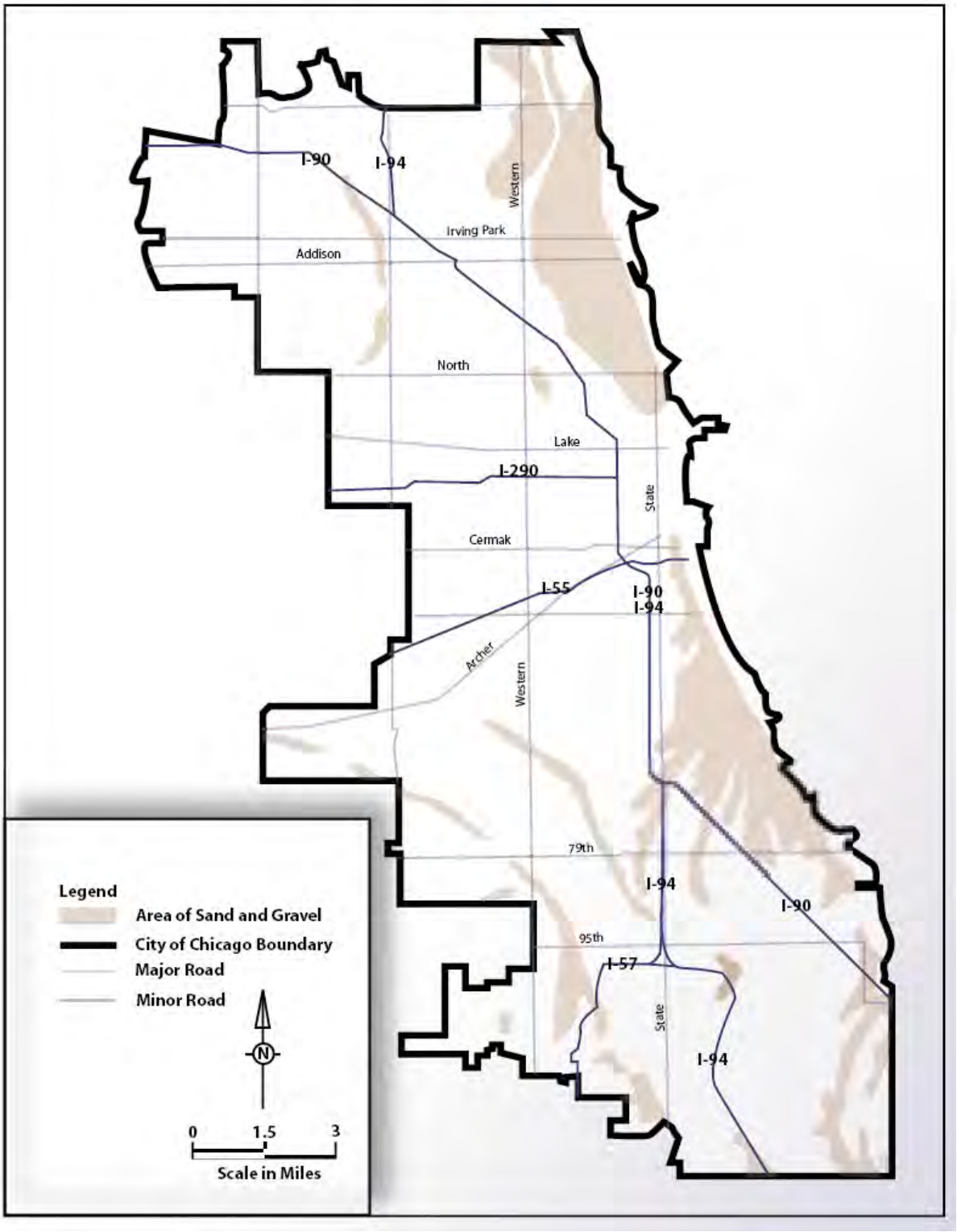

Step 2: Soil Borings

Soil borings confirm the feasibility of infiltration designs, refine the location of infiltration practices and provide data to select the type of infiltration device to be used. The number of soil borings required is based on the size of the development and expected BMPs (minimum one boring per 15,000 square feet of BMP area). Soil borings are required at the location of all proposed infiltration devices. Information submitted shall include, at a minimum:

1. The name of the professional and firm who collected the data, and the date the data was recorded.
2. A scaled map of the entire site showing the location of all soil borings taken on the property.
3. Soil boring logs shall be submitted for each boring. Boring method and sample collection method shall be described. The boring logs shall contain the following data, at a minimum:
    a. Surface elevation of boring
    b. Site topography at one-foot contour interval
    c. NRCS textural description of each strata encountered and at what depth
    d. Water content and porosity of each strata
    e. Groundwater level during and after drilling
    f. Grain size analysis (D10, D60, D90) for strata where infiltration is proposed and immediately adjacent strata
    g. Borings shall extend at least five feet below the elevation at which groundwater is encountered
    h. Each boring shall be a minimum of 2-inches in diameter
4. If native soils are proposed for infiltration without disturbance, then soil profile descriptions written in accordance with the Field Book for Describing and Sampling Soils by the USDA, NRCS, 1998 also are required. Additionally, the description for each soil horizon or layer shall include the following information:
    a. Thickness, in inches or feet
    b. Munsell soil color notation
    c. Soil mottle or redoximorphic feature color, abundance, size and contrast
    d. USDA soil textural class with rock fragment modifiers
    e. Soil structure, grade size and shape
    f. Soil consistence, root abundance and size
    g. Soil boundary
    h. Occurrence of saturated soil, groundwater, bedrock or disturbed soil

All soil boring data shall be submitted to the City as part of the SMP. The soil borings data should show that the required infiltration parameters are available for the location of each infiltration device.

Design infiltration rates for the USDA soil classifications are shown in Table 3-1. If the soil at the depth of the proposed bottom of the infiltration BMP is found to be sand or coarser, then field-testing

of infiltration rates is not required and the maximum infiltration rate can be assumed to be 1.4 inches per hour.

Table 3-1 Design Infiltration Rates for USDA Soil Textures (Univ. of Wisconsin, Madison, 2006)

USDA Soil Texture	Design Infiltration Rate (in/hr)
Sand	3.60
Loamy Sand	1.63
Sandy Loam	0.50
Loam	0.24
Silt Loam	0.13
Sandy Clay Loam	0.11
Silty Clay Loam	0.19
Clay Loam	0.03
Sandy Clay	0.04
Silty Clay	0.07
Clay	0.07

Step 3: Field Infiltration Rate Test Procedures and Methods

Field testing to determine design infiltration rates is encouraged. The complex nature of surficial geology makes actual site data necessary for the development of design parameters. Field testing must quantify sustainable infiltration rates. Infiltration designs must be highly reliable and self-sustaining. The failure of an infiltration device may create an unsolvable drainage problem since surface discharge is not available or would cause flooding downstream. For this reason, good design data, based on appropriate field-testing, is essential. It is the design engineer's responsibility to ensure that the infiltration system will be able to meet and sustain the design infiltration rate. Infiltration tests should be performed as described below.

Determination of Field Infiltration Rate

Infiltration testing will generally be one of two methods. For sites where soils with suitable infiltration rates are within a few feet of the surface, single-ring infiltration testing can be used. The procedures described below for the single-ring test are modified from Bouwer 1978 and 2001. Alternatively, a double-ring infiltrometer test may be performed based on ASTM standards.

Infiltrometer Test Method

The single-ring infiltrometer method consists of driving a 12-inch open cylinder 24 inches long partially into the ground (at the proposed elevation of the bottom of the infiltration facility), filling the ring with clean water, and then observing the water level drop over time (Figure 3-3). Water is added to the ring as needed to restore the liquid level. The test should be performed with a sufficiently small time interval so that the total change in water level per time interval is less than 12 inches. The cumulative volume infiltrated during timed intervals is plotted versus elapsed time. The test is performed over several hours until a steady state infiltration rate develops.

Figure 3-3 Single Ring Infiltrometer

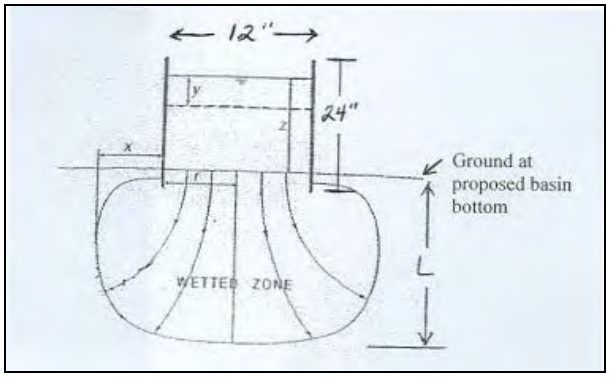

z = ~ 20-24 inches
y = maintain after 12 inches drop

Test Site

- The soil strata to be tested should be based on the soil borings data and the proposed basin bottom.
- The test site should be nearly level, or a level surface should be prepared.
- The test may be set up in an excavated pit if needed to reach the stratum to be tested.

Placing the Infiltration Ring

The cylinder is driven straight down to a depth of about 2-4 inches into the ground. The soil is packed against the inside and outside of the cylinder to achieve good soil-cylinder contact. Course gravel may be added inside the cylinder for erosion prevention when adding the water.

Adding Water and Measurement

The cylinder is filled to the top with clean water, and clock time is recorded. The decline is measured at regular intervals with a ruler, and clock time is recorded. Water is allowed to lower about 12 inches before refilling. This procedure is repeated for several hours or until steady state infiltration rate has been reached. The last decline y is measured and clock time is recorded to obtain the time increment Δt for y.

Calculations

Table 3-1 presents an example of tabulated water level drops and infiltration rate calculations for a single-ring infiltration test.

The corresponding downward flow rate, or flux i_w in the wetted area below a cylinder of radius r, is then calculated as:

$$i_w = \frac{i\pi r^2}{\pi(r + x)^2}$$

where *x* is the distance of lateral wetting from the cylinder wall (Fig. 2.1). *x* should be assumed to equal one-half *r (the value of x may be adjusted if in-field physical observations suggest otherwise)*. The rate, *i*, is calculated from the last measurement in the test ($y/\Delta t$).

The depth L of the wet front at the end of the test is calculated from the total accumulated declines y_t of the water level in the cylinder as:

$$L = \frac{y_t \pi r^2}{n\pi(r + x)^2}$$

where *n* is the assumed in-situ porosity of the soil. For permeable soils, a value of 0.2 to 0.3 would be typical. Darcy's equation can be used to calculate the downward flow in the wetted zone:

$$i_w = \frac{K(z+L)}{L}$$

where *z* is the average depth of water in the cylinder during the last water-level decline. To solve for *K*:

$$K = \frac{i_w L}{(z + L)}$$

This calculated value of K is used as an estimate of long-term infiltration rates in infiltration devices (the design infiltration rate, subject to rules below). It does not consider clogging of the surface of the device or restricting layers below the infiltration stratum.

Design Infiltration Rate

A design infiltration rate for use in BMP computations may be selected based on results of the field measurements. While field infiltration rates are an indication of actual infiltration device performance, there are elements that may cause actual infiltration rates to be less than the measured infiltration rate. These include, but are not limited to: soil variability over the bottom of the infiltration device, actual construction procedures, variability in construction materials, clogging due to fines during construction, and clogging over time due to stormwater pollutants that escape pretreatment and biological growth. Design infiltration rates should be selected as follows:

- For field permeability greater than 3.6 in/hr (4.6 x10-5 fps), a design rate of 3.6 inches should be used.
- For rates less than 3.6 in/hr, the actual field permeability should be used.
- Field permeability less than 0.5 in/hr requires additional design features as described in Section 3.2.1.2 in order to implement infiltration based BMPs.

If percolation testing is necessary, at a minimum, one percolation test must be provided for each separate BMP area. If a BMP area is larger than 15,000 square feet, additional percolation tests will be required for every 15,000 square feet of BMP area.

A Soil and Site Evaluation Report shall be submitted as part of the SMP. The report should contain all information outlined above in Steps 1, 2, and 3. It also should present the time versus infiltration rate results graphically and field observations of all tests. A field determined infiltration rate should be calculated for each infiltration-based BMP when soil borings did not reveal sand or loamy sand soils.

Table 3-1 Single Ring Infiltrometer Infiltration Rate Determination

12-inch Infiltrometer

Volume Rate= 0.785 cubic feet / foot of drop

Elapsed Time (minutes)	Change in Time (minutes)	Water Decline (feet)	Cumulative Volume (cubic feet)
0	0	0.00	0.0000
15	15	0.09	0.0707
45	30	0.09	0.1413
75	30	0.13	0.2434
105	30	0.06	0.2905
135	30	0.10	0.3690
165	30	0.11	0.4553
195	30	0.12	0.5495
225	30	0.10	0.6280
255	30	0.10	0.7065
285	30	0.10	0.7850
315	30	0.10	0.8635
345	30	0.10	0.9420
	Totals:	**1.20**	**0.9420**

Infiltration Rate

$i_n = y_n / t_n$ = 0.10 / (30 x 60) 0.000056 feet per second (fps)

z = 1.66 feet

y_t = 1.20 feet

$i_w = i_n \pi r^2 / \pi (r + 0.5r)^2$

i_w = 0.000056 x π x 0.5^2 / π (0.5 + 0.5 x 0.5)^2

i_w = 0.0000249 feet per second (fps)

$L = y_t \pi r^2 / n \pi (r + 0.5r)^2$

L = 1.2 π x 0.5^2 / 0.2 x π (0.5 + 0.5 x 0.5)^2

L = 2.67 feet

$K = i_w L / (z + L)$

K = 0.0000153 feet per second (fps)

K = 0.66 in/hr

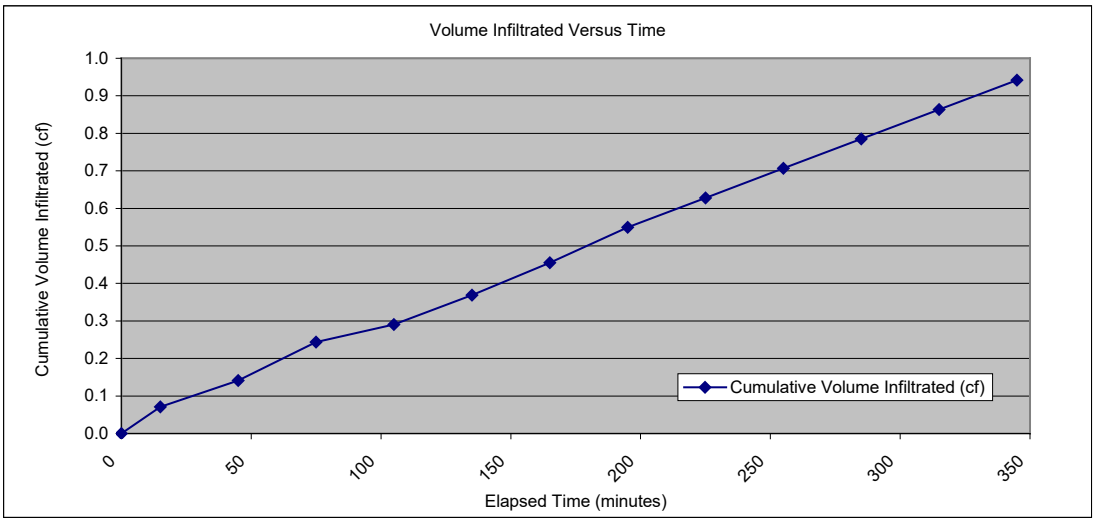

3.2.1.2 Underdrains

When underlying soils do not meet the minimum permeability of 0.5 inches per hour, an infiltration BMP may still be implemented with the use of underdrains. Underdrains may be placed within the aggregate layer of permeable paving, swales or bioinfiltration basins. Outflow from underdrains must not bypass the detention facility serving the site. The high groundwater table must be at least 3.5 feet below any underdrain system discharging to a combined sewer.

3.2.2 Drainage Areas and Volume Control

Many regulated developments will drain to one or more discharge points leading to waterway, water body, combined sewer or separate storm sewer. It is allowable to construct an oversized volume control BMP in one subarea to compensate for reduced or lacking volume control measures in other areas of the site. The following criteria must be met when using this approach:

- When draining only to the combined sewer system, oversized volume control BMPs can receive storage credit for up to the volume of runoff generated by a 1-inch rainfall event over the tributary area. This ensures that the oversized volume control measures will be sufficiently effective. When applicable, the BMP spreadsheets in the **Stormwater Management Permit Worksheet** provide a check for this volume.
- When draining to a storm sewer or waterway, all subareas must provide the required volume control because of the pollution reduction benefits that are provided.

3.2.3 Direct Discharge to Waters

Sites that discharge directly to Waters or a storm sewer must provide volume control for all subareas except for roofs that bypass the stormwater management system. When infiltration BMPs are impractical due to the conditions described in Chapter III, Section 4.1.2 of the Regulations, oversized detention may be used to capture and control the required volume control storage. Oversized detention facilities that discharge to Waters or a storm sewer shall have a maximum release rate of 0.04 cfs per acre for the volume control storage. This may require the use of a two stage outlet device. Also, when volume control is achieved through oversized detention, no credit toward rate control storage is provided. The volume control storage must be in addition to any required rate control storage.

3.2.4 Alternative Volume Control Measures

Depending on the site characteristics, several alternatives to implementation of infiltration based BMPs may exist for achieving compliance with the volume control provision.

3.2.4.1 Reduction of Impervious Areas

Sites that do not directly discharge to Waters or to a separate storm sewer system may achieve the volume control requirements by reducing the existing conditions imperviousness by 15 percent (i.e. – 85 percent impervious existing conditions site must be 70 percent impervious under proposed conditions). Sites that will be less than 15 percent impervious under proposed conditions are not subject to the volume control requirements. Once the existing conditions for a site have been identified, the **Volume Control Worksheet** indicates the proposed conditions imperviousness required to meet the volume control requirements. The Ordinance defines **existing conditions** as:

> *The condition of a site in the ten years prior to the date of a Plan submission, as shown on historical aerial photographs or other verifiable documentation. If a site has been demolished*

and/or cleared within such ten-year period, its conditions prior to such demolition and/or clearing may be used as a basis for existing conditions.

If the reduction of impervious areas option is used, then the SMP submittal should include documentation of the existing conditions. Tributary sidewalls are not included in the computation of proposed conditions site imperviousness for the purposed of impervious surface reduction computations.

3.2.4.2 Oversized Stormwater Detention

When infiltration is impracticable due to the conditions described in Section 4.1.2 of the Regulations, the volume control requirement may be fulfilled by detaining the required volume control storage. Detention of the volume control storage is also allowable on lot to lot developments (when structures exceed 85 percent of the site).

When volume control storage is detained, it shall be held separate from (in its own facility) or in addition to the required detention for rate control. In either case, it should be fully utilized under the minimum required design storm applicable to the appropriate subarea of the site (10-year if a building roof, 100-year for other areas). When this storage is to be added to the detention facility, the release rate shall be reduced accordingly to make use of the additional storage (see oversized detention worksheet) If the computed volume control release rate is less than 0.15 cfs (the rate of the minimum allowable restrictor), then the volume control storage shall be provided in addition to the required detention volume for rate control, and a pump discharge may be required.

When off-site flows drain through a stormwater management system, the 25-year storm analysis must be done using the reduced release rate calculated in the oversized detention worksheet.

3.3 Volume Control BMPs

This section discusses volume control BMPs that can be used to comply with the Ordinance and Regulations. The list of volume control BMPs is not all-inclusive. The City has identified common volume control BMPs that can be implemented to meet the goals and objectives of the Ordinance. The City has prepared BMP guidesheets (Appendix C) that include additional information on the implementation of these stormwater BMPs. Calculation spreadsheets are provided in the **Stormwater Management Permit Worksheet** and they should be used as the basis for compliance with the Ordinance and Regulations.

3.3.1 Volume Control BMPs

These BMPs are generally applicable to volume control and are discussed below.

- Green Roofs
- Rooftop Runoff BMPs (Planter Boxes, Rain Barrels and Cisterns)
- Permeable Paving
- Natural Landscaping
- Vegetated Filter Strips
- Bioinfiltration Systems
- Drainage Swales
- Infiltration Vault (also see Section 2.5.2)

Green Roofs

In green roof systems, runoff is absorbed and retained by living vegetation installed on a rooftop. There are two types of green roof systems: extensive and intensive systems. Extensive systems usually contain shallower soil, put less weight on rooftops, and are easy to maintain. They generally contain shorter plants with shallower root systems. Intensive systems have deeper soil; add more weight to a rooftop; and generally contain a more diverse mixture of deep-rooted plants, trees, and shrubs. Intensive systems require more maintenance but provide added benefits in the form of water filtration and wildlife habitat. Green roof systems provide insulation and prolong the life of a roof by protecting it from the elements. Green roof systems also improve air quality by reducing the urban heat island effect. Maintenance of green roof systems is minimal and mostly involves watering and weed removal during the first few years of establishment.

For rate control, green roof benefits are accounted for by computing a weighted C-value based on the amount of storage provided in the roof's substrate. In most cases, a green roof will not cover all surfaces of a roof. The green roof will be counted as a pervious surface to aid in achieving the required impervious area reduction. In addition, the lower C-value of the green roof will have the effect of reducing the volume of storage required to meet the rate control requirements. The **2.1.3 Green Roof** spreadsheet in the **Stormwater Management Permit Worksheet** guides the use through both computations.

Roof Runoff BMPs (Planter Boxes, Rain Barrels and Cisterns)

Roof runoff BMPs include planter boxes, rain barrels, and rain cisterns. Planter boxes are used in heavily paved areas to reduce the area of impervious areas. Planter boxes can be aboveground or at grade and are designed to retain water in the substrate or in an underlying aggregate. Planter boxes come in a wide variety of shapes and sizes and may be planted with native or ornamental plants. Planter boxes at grade can be designed to drain part of the surrounding paved area. Planter boxes can also be designed to infiltrate water into the ground or to capture water through an underdrain system that discharges excess water into a sewer system. The storage provided in the voids of underlying aggregate and in the contained air space (reservoir) above the soil may be counted as volume control storage.

Rain barrels and cisterns collect and store stormwater runoff from rooftops. The volume of rain barrels or cisterns may be counted as volume control storage. Credit is also received toward rate control storage, but this cannot exceed 10 percent of the total required rate control storage. Water collected in rain barrels and cisterns can be used to water lawns and landscaped areas between storms. Rain barrels and cisterns are therefore most useful during the growing season. They require periodic cleaning to remove debris. Filters to keep out most debris can be installed, but periodic cleaning is still advised. In addition, rain barrels should be sealed to prevent mosquito breeding and must be drained before winter to prevent any damage from freezing and thawing. Rain barrels do not have a significant effect on C-values for 100-year storm events.

The **2.1.7 Roof Runoff** spreadsheet in the **Stormwater Management Permit Worksheet** provides a guide for computing volume control for Roof Runoff BMPs.

Permeable Paving

Permeable paving provides many benefits in urban environments by reducing the quantity of stormwater runoff and pollutants discharged from a site. Permeable pavement systems come in many

different forms. The most common forms are paving blocks with a cutout to facilitate infiltration or grids that have openings filled with a porous material such as rock, sand or soil. Paving blocks work best on areas that have sandy, permeable soils, however, they may also be implemented on low permeability soils by using aggregate and an underdrain system. Permeable pavement systems are most useful in areas that do not receive high traffic volumes or heavy weight loads.

Areas of permeable pavement may be counted as permeable surfaces, unless the aggregate layer includes an underdrain or the aggregate storage is being used for detention. In these cases, the permeable pavement should be treated as an impervious surface for volume control and detention requirements. The storage provided in permeable paving systems is based on the void space of the aggregate. The **2.1.6 Permeable Pavement** spreadsheet in the **Stormwater Management Permit Worksheet** shows how to determine the total storage provided under different design scenarios.

Natural Landscaping

Natural landscaping involves the planning and implementation of naturalized or native vegetation on permeable soils or prepared soils. Care must be taken to ensure that the proposed vegetation and existing soils are compatible. If existing soils are unsuitable for implementation of native vegetation, alternative landscaping plans should be devised, or a prepared soil should be brought in to the site. Natural landscaping on prepared soils has a greater capacity to infiltrate stormwater than lawns on heavy soil. As shown on the detention design spreadsheet, areas with natural landscaping on permeable or prepared soils have a lower C-value and can reduce the amount of required detention storage. There is no volume control benefit specifically related to natural landscaping, however, natural landscaping can be an integral part of the design of other BMPs such as vegetated swales, filter strips and bioinfiltration basins.

Trees can also be used for minor volume control benefits and to reduce urban heat island effects. Trees slow down rain from small storms, holding the water on leaves and branches and allowing the water to evaporate. Urban heat island effects are reduced because trees provide shade to impervious surfaces, thereby decreasing the temperature of the surfaces and subsequently the temperature of the surrounding air and of any stormwater that passes over the impervious area. Lowering the temperature of stormwater runoff can be beneficial in improving the water quality of receiving streams. Existing trees located on the development site that are preserved as part of the site plan and proposed trees located on the development site that are planted within 20 feet of on-site impervious areas may count as a deduction of impervious areas on site for volume control calculations. The tree species must be chosen from the approved list provided by the CDOE. New trees planted must be planted within 20 feet of ground level impervious surfaces. New trees must be at least 2-inch caliper at 4.5 feet above ground level to be eligible for the reduction. A 50 sq.-ft. reduction in impervious area is permitted for each new tree. Only 50% of the canopy area of an existing tree of at least 4-inch caliper, within 20 feet of ground level imperviousness, may be credited towards a reduction in impervious area. The **2.1.5 Trees** spreadsheet in the **Stormwater Spreadsheet Tool** shows how to determine the total benefits of providing stormwater trees.

Vegetated Filter Strips

Filter strips are designed to receive stormwater runoff from impervious surfaces and disperse it over wide, vegetated areas. Filter strips should be implemented in areas with little or no slope to provide the maximum impact by slowing and infiltrating runoff and allowing pollutants and sediment to deposit

or be filtered out. When implemented on permeable or prepared soils, filter strips can effectively reduce runoff volume for small storm events, especially when they receive runoff from areas no more than four or five times their size. If designed according to the guidelines, the filter strip may satisfy the volume control requirements for up to a 1 to 1 ratio of impervious area to the area the filter strip. For example, if one acre of parking lot was discharged to a one-quarter-acre filter strip, additional volume control measures would be needed for only the three quarters of an acre of parking lot. Maintenance requirements for filter strips are simple. Normal maintenance requires occasional mowing or weed removal and periodic cleaning. Filter strips can decrease maintenance requirements of downstream stormwater devices by capturing and controlling sediment. The **2.1.8 Filter Strips** spreadsheet in the **Stormwater Spreadsheet Tool** shows how to determine the volume control benefits of providing filter strips.

Level spreaders should be used to disperse runoff to the filter strip and avoid channelization. A level spreader intercepts concentrated flows and disperses runoff in a uniform manner to the filter strip. It may consist of a gravel-filled trench running perpendicular to the direction of concentrated flow. Water fills the trench, spreading evenly along the trench's axis before overflowing on the downstream side. Level spreaders improve the effectiveness of the filter strip or other BMPs that depend on sheet flow to operate. Level spreaders can be used at the edges of parking lots, loading areas, driveways, roof downspouts, and other discharge points when a point source discharge should be spread over a larger level area. Level spreaders are inexpensive and require very little maintenance.

Bioinfiltration Systems

Bioinfiltration systems are features such as basins or trenches that collect stormwater from surrounding impervious areas. These flow regulating structures pass inflow through a shallow depressed area containing plants, mulch, and a prepared soil. A rain garden is a good example of a bioinfiltration system, which is relatively easy to construct. Bioinfiltration is very effective at reducing runoff volume and removing pollutants, especially when used as parking lot islands. As with drainage swales and vegetated filter strips, bioinfiltration systems work best when used to collect runoff from small storm events. In some cases, bioinfiltration systems can be used in conjunction with sewer systems by incorporating underground perforated pipes or overflow inlets.

Bioinfiltration systems should be located away from structures so that water does not drain into the foundations of the structures. As with the other infiltration BMPs, the subsoils must have a permeability of at least 0.5 inches per hour. Bioinfiltration systems work best when pretreatment is provided in the form of drainage swales or vegetated filter strips to reduce the amount of sediment that reaches the infiltration facility. If pretreatment is not provided by an upstream BMP, then it can be designed into the bioinfiltration system as a plunge pool or sediment forebay. The **2.1.1 Bioinfiltration** spreadsheet in the **Stormwater Spreadsheet Tool** shows how to determine the volume control provided by a bioinfiltration facility.

Drainage Swales

Runoff can be conveyed through either a constructed channel (such as a ditch or swale) or a natural channel. Constructed channels can be designed purely for conveyance, or can include measures to enhance infiltration such as check dams. If designed according to the design guidelines, the swale may satisfy the volume control requirements for up to a 1 to 1 ratio of impervious area to the area the swale. Swales with check dams or that are underlain by storage aggregate can provide additional

volume control. The storage behind check dams may be counted as volume control storage. Storage may also be provided in the voids of underlying storage aggregate when minimum infiltration requirements are met or when underdrains are provided. Swales can reduce the volume of stormwater runoff from a site, especially during small storm events, if the swale is situated in permeable soils. Swales or unlined ditches and natural channels are superior to conventional storm sewers because they allow water infiltration and can remove pollutants if they are vegetated. Vegetated swales can be planted with native vegetation to provide enhanced wildlife habitat and to increase the amount of runoff removed by transpiration and evaporation. If at all possible, natural drainageways should be preserved as part of the development site's drainage system. Another advantage of swales, ditches, and natural channels is their low capital cost. Swales and ditches can be designed to convey both high and low flows but may be difficult to implement where space is limited. The **2.1.2 Swales** spreadsheet in the **Stormwater Spreadsheet Tool** how to determine the total volume control provided by a drainage swale.

Infiltration Vault (edit based on perm paving)

Detention vaults are box-shaped underground stormwater storage facilities typically constructed with reinforced concrete. Infiltration vaults are detention vaults with an open bottom to encourage infiltration in areas where permeable subsoil conditions are found. This option may be used to satisfy volume control requirements but above-ground naturalized infiltration facilities are preferred. Infiltration vaults must include a design for pretreatment. In many cases this can be provided within the vault itself, but a definitive long-term maintenance plan will be required for the removal of sediment. When the infiltration rate has been verified by geotechnical investigations and pretreatment is provided, the infiltration rate may be counted in addition to the allowable release rate when computing required storage volumes. The **2.1.4 Infiltration Vault** spreadsheet in the **Stormwater Spreadsheet Tool** how to determine the total volume control provided by an infiltration vault.

4.0 Erosion and Sediment Control

4.1 Introduction and Applicability

Sediment erosion and sedimentation have become major concerns in northeastern Illinois during recent years because of the ever-increasing pace of development. Controlling erosion and sedimentation, especially during construction, is essential for maintaining water quality and reducing the potential for damage to adjacent sites or the sewer system. Dust creation and sediment transport are two major problems at construction sites. Construction work creates large amounts of dust that can be stirred up by vehicle traffic and settle onto surrounding areas. Sediment can be directly transported in runoff or by vehicles entering and leaving the development site. Environmental impacts from erosion and sedimentation are summarized below.

- Water quality impairment: Sediment that enters the water column increased turbidity and delivers nutrients which can lead to undesirable algae growth. Sediment reduces sunlight penetration and can deposit and cover bottom substrates which degrades the habitats and spawning areas of aquatic organisms.
- Loss of storage volume: Excess sediment from construction sites fills storm sewers and ditches, detention basins, wetlands, and stream and river channels, thereby reducing their ability to convey runoff. Sediment may also collect in ponds and lakes leading to reduced depth and aesthetic problems.
- Degradation of natural areas: Over time, sediment accumulation and deposition can lead to the degradation of natural plant communities such as prairies and wetlands. The sediment can bury or suffocate existing plants, smother the native seed bank, and act as a medium for the germination of invasive plant seeds that were carried in with the sediment.

Sediment deposits are expensive to remove from sewers, culverts, ditches, lakes, and streams. In addition, areas degraded from excessive erosion are more expensive to landscape and maintain. Because of these economic concerns and the environmental impacts listed above, and to meet state and federal regulations, the City of Chicago (City) regulates erosion and sedimentation created during construction activities. All developers subject to the Ordinance and Regulations must install and maintained soil erosion and sediment control (SESC) measures during construction to reduce or prevent the discharge of sediment and other pollutants in stormwater runoff from the Development. In addition, the City encourages development projects to meet the standards in the Leadership in Energy and Environmental Design (LEED™) Green Building Rating System. Erosion and sedimentation control is a prerequisite included in the LEED™ Rating System. To evaluate ECPs, the LEED™ system uses standards set forth in (1) the U.S. Environmental Protection Agency's (EPA) "Storm Water Management for Construction Activities" (Document No. EPA 832/R-92-005) or (2) more stringent local standards (if applicable). Although not required, the LEED™ system can help developers create environmentally sustainable developments that will be a continuing source of pride in the City.

4.2 General Requirements

All developers subject to the Ordinance and Regulations must install and maintain SESC measures during construction to reduce or prevent the discharge of sediment and other pollutants in stormwater runoff from the development. The SESC measures should be installed prior to land disturbing activities and be maintained in functional order until the property has been permanently stabilized. A site is considered permanently stabilized when all land disturbing activities have been completed, all construction SESC measures have been removed, and a uniform perennial vegetative cover with a density of 70 percent for unpaved areas and areas not covered by permanent structures has been established or equivalent permanent stabilization measures have been completed.

The “Illinois Urban Manual” prepared for the Illinois Environmental Protection Agency (IEPA) by the U.S. Department of Agriculture (USDA) - Natural Resources Conservation Service (NRCS) has become the industry standard for selecting and designing SESC measures (also refereed to as SESC best management practices (BMPs)) and permanent stabilization measures. All SESC measures utilized on the Regulated Developments must be constructed and maintained in accordance with standards and specifications set forth in the most recent version of the Illinois Urban Manual

Information for purchasing or downloading the “Illinois Urban Manual” can be accessed at http://www.il.nrcs.usda.gov/technical/engineer/urban/index.html (USDA-Natural Resources Conservation Service and IEPA 2002).

4.3 Submittal Requirements

Applicants with Regulated Developments over one acre in size are required by the Ordinance to comply with all IEPA NPDES for construction activities. For Regulated Developments over one acre in size that discharge to a waterway, water body, or storm sewer, the Regulated Development must obtain and operate in accordance with a General NPDES Permit for Stormwater Discharges from Construction Site Activities (General NPDES permit ILR10). In addition, as required by both the Ordinance and the ILR10 permit, a copy of the Stormwater Pollution Prevention Plan (SWPPP) developed for the property and the Notice of Intent (NOI) filed with the EPA to obtain the ILR10 permit must be kept on-site during construction and be made available for review upon the request of all field inspectors.

For Regulated Developments over one acre in size that discharge to the combined sewer system a ILR10 permit does not need to be obtained from the IEPA. However, in order for this exception to apply, the entire Regulated Development must discharge to the combined sewer system. If any portion of the Regulated Development discharges to a waterway, water body, or storm sewer, a ILR10 permit must be obtained for the entire Regulated Development.

The IEPA’s stormwater website presents more detailed information about IEPA NPDES requirements for construction activities and the ILR10 permit. It is available at: http://www.epa.state.il.us/water/permits/stormwater/construction.html

4.3.1 Development Sites Discharging to Combined Sewers

Applicants with Regulated Developments regardless of size discharging to combined sewers must submit a signed Design/Construction Affidavit in Support of Soil Erosion and Sediment Control Measures during Construction to the DOB as part of their Stormwater Ordinance submittal.

The Affidavit ensures that functional and effective construction SESC measures will be installed and operational on the Regulated Development in order to reduce or prevent the discharge of sediment and other pollutants in stormwater runoff from the development. The Affidavit provides a list that identifies the SESC BMPs that will be installed and maintained on the Regulated Development. The Affidavit must be signed by the General Contractor and Developer/Owner.

4.3.2 Developments Discharging to Waters

All Regulated Developments regardless of size that discharge directly to a waterway, water body, or storm sewer are required to develop an Erosion Control Plan (ECP) for the proposed construction activities. The ECP must include the following and be submitted to DOB for review as part of the Regulated Development Stormwater Ordinance submittal:

- Temporary erosion and sediment control measures applicable to each phase of construction activity
- Permanent stabilization measures including landscape seeding and sodding plans
- Means of accommodating 2-year stormwater flows onsite and by-passed during construction
- A maintenance schedule for each erosion control measure. During construction, each erosion control measure shall be inspected weekly or after more than 0.5-inch of rainfall.
- Means to protect infiltration BMPs during construction

The most recent edition of the “Illinois Urban Manual” should be used as a source book for information about selecting, installing, and maintaining specific BMPs that are to be incorporated into the developer’s ECP. When selecting and implementing the SESC BMPs to be utilized on a construction site, it is important to understand them in context of an overall construction site plan. It is recommended that the following site design, management, and maintenance principles be implemented on all Regulated Developments requiring an ECP.

1. Plan the development site to fit the natural topography, soil, drainage patterns, and vegetation.
2. Preserve and protect areas of natural vegetation. Areas to be preserved shall be protected with fencing to prevent damage from construction operations.
3. Take special precautions to prevent damage that could result from development activities near watercourses, lakes, and wetlands.
4. Minimize the extent and duration of the area exposed at one time.
5. Apply temporary erosion control practices as soon as possible to stabilize exposed soils and prevent on-site damage.
6. Install sediment basins or traps, filter barriers, diversions, and perimeter control measures prior to site clearing and grading to protect the disturbed area from off-site and on-site runoff and to prevent sediment transport to areas downgradient from the development site.
7. Keep runoff velocities low, and retain runoff on site as much as possible.

8. Provide measures to prevent sediment from being tracked onto public or private roadways.
9. Implement final grading and install permanent vegetation on disturbed areas as soon as possible.

The ECP should include a description of all erosion and sediment control BMPs that will be implemented on the site. All erosion and sediment control BMPs selected and implemented at the site are required by the Ordinance to comply with the standards and specifications set forth in the "Illinois Urban Manual." The ECP should also clearly describe each major construction activity (grubbing, excavation, grading, etc.) what BMPs will be utilized and the timing during the construction process that the BMPs will be implemented.

The Ordinance requires that all Regulated Developments that discharge stormwater to a waterway, water body, or storm sewer to conduct site inspections. Inspections must be completed weekly, or after each storm resulting in more than 0.5 inches of rainfall. The purpose of the inspections is to assess and determine whether the SESC measures identified in the ECP are operating properly and effectively, and to initiate maintenance as needed. Inspections should include a visual observation of all disturbed areas of the Regulated Development, material storage areas, sediment and erosion control measures, locations where vehicles enter or exit the Regulated Development, and accessible discharge points (outfalls). The inspection should be completed by qualified inspectors who are familiar with the ECP plan and the BMPs implemented at the site.

Inspection reports should be completed at the time of inspection. At a minimum, the inspection reports should contain:

1. The inspector's name and qualifications
2. Date of inspection
3. A summary of the scope of the inspection (property information)
4. A discussion of the BMPs implemented on-site and an opinion to whether the BMPs are operating properly and effectively based the specifications provided in the Illinois Urban Manual. If a BMP is identified as not operating properly or is not effective, the inspection report should contain recommendation and/or strategies for alleviating the identified deficiency.

SESC measures and other BMPs should be maintained in effective operating condition. In general, if inspections indicate that a BMP is not operating properly, it is recommended that maintenance and modification of the BMP be performed as soon as possible and before the next storm event whenever practicable and no later than seven (7) calendar days from the inspection date, to ensure its continued effectiveness. Minimum maintenance standards for each specific BMPs are included in the Illinois Urban Manual and are required by the Ordinance to be included in the ECP.

The Regulated Development must keep a copy of the ECP on-site at all times during construction and make the ECP available for review by a City field inspector upon request.

5.0 Operation and Maintenance Requirements

5.1 Introduction and Applicability

Operations and maintenance (O&M) is essential for proper stormwater management. The BMPs and stormwater management design elements discussed in Sections 2.0 through 4.0 of this Manual require certain O&M activities in order to ensure their long-term performance. By making a commitment to regular O&M activities, developers will be able to achieve desired design results while maintaining the aesthetic qualities of the overall landscape. Regular O&M activities also prolong the optimal function of landscape designs and treatments, allowing developers to avoid significant repair and restoration costs that would be associated with more traditional stormwater management methods. The O&M and inspection guidelines presented below are not all-inclusive. Some BMPs may require other measures not discussed here. It is the designer's responsibility to decide whether additional measures are necessary. The O&M requirements in this chapter apply to all BMPs identified in Sections 2.0 through 4.0 except as discussed below.

- Developments with less than 15,000 sf and less than 7,500 sf of at-grade impervious surface do not require O&M plans unless they discharge to a waterway or separate sewer.
- O&M plans do not need to be submitted for the existing tree canopy.

The BMP Guidesheets in Appendix C identify the minimum O&M requirements for each type of BMP included in this Manual. For stormwater management facilities not included in this Manual (such as a manufactured stormwater treatment technology), it is still necessary to prepare and submit an O&M plan that complies with the requirements discussed in this section. Proper training and written guidance should be provided to all personnel who will be involved in O&M. Copies of applicable O&M plans should also be provided to all property owners and tenants. This information should include, at a minimum, the general O&M requirements discussed below.

5.2 General Requirements

Developers whose sites will contain rate control facilities or the BMPs discussed in Section 3.3 or other BMPs approved by the City will need to create an O&M plan. An O&M plan must cover all activities necessary to ensure the smooth functioning of all BMPs in the stormwater management plan (SMP). O&M procedures must be reviewed and assessed annually. All O&M plans must include information summarized below.

5.2.1 Owner Information

The first section of the O&M plan must contain information about all people involved with the O&M plan. It must list the names and contact information of all responsible parties, including property owners, maintenance workers, and people who will be performing inspections. The responsibilities of each person listed should be clearly defined in this section.

5.2.2 Site Map

The O&M plan must include a site map showing the locations of all BMPs that will be present at the development. The site map should show the flow of stormwater through the site and provide an overview of the stormwater's path through the onsite BMPs. The map must, at minimum, include the

following information: (1) discharge points and outfall locations; (2) drainage patterns; (3) stormwater runoff flow direction; (4) the extent and depth of high water levels; (5) structural controls used to control stormwater flows; and (6) locations of all selected BMPs on site.

5.2.3 O&M Practices

Each BMP will require a specific inspection and maintenance regimen. In addition, the minimum requirements below shall be incorporated into the inspection and maintenance regimen.

- O&M Plan must be signed by the owner and notarized using the Operation and Maintenance Plan Owner's Certification Statement found in the Regulations, Appendix II-A, Sheet A.22. A copy of the O&M Plan must be provided to each new owner before the consummation of a sale, and the O&M Plan must be signed by the new owner, notarized, and submitted to the City to be kept on record.
- O&M Plan procedures and practices must be reviewed and assessed annually
- Access routes including roadways and sidewalks shall be inspected annually and maintained as needed
- Drainage structures and flow restrictors must be inspected and cleaned semi-annually
- Volume control BMPs shall be inspected semi-annually and after significant rainfall events exceeding 1.5 inches
- The Owner shall keep an updated log book documenting the performance of the required O&M activities for perpetuity. Log books must be produced upon the request of a City inspector.
- Vegetation shall be maintained on a regular basis.
- Pest control measures shall be implemented to address insects and rodents.
- Signage and fencing shall be installed and maintained where necessary to protect property and the public.
- Underground vaults must include design measures to facilitate cleaning and maintenance. Confined space safety procedures must be followed.

The BMP guidesheets discuss the particular O&M needs of each BMP. The O&M plan in the SMP should contain this BMP-specific information. The developer must create an O&M sheet for each BMP not listed in this Manual.

5.2.4 Implementation Schedule

An inspection and maintenance schedule should be created as part of the O&M plan. This schedule should provide for routine examination of all BMPs and incorporate the varying maintenance needs of each BMP. The City requires that property owners keep an O&M inspection and maintenance logbook. In general, the logbook should note all inspection dates, facility components inspected, and any maintenance performed and repairs made. All inspections and maintenance, both routine and emergency, should be recorded in the logbook. Each BMP-specific O&M sheet should serve as a checklist for design elements that require inspection, the frequency of inspections, and conditions that indicate that maintenance is needed.

5.2.5 Employee Training

Specific individuals should be assigned responsibility for O&M of all onsite BMPs. Employee training should be conducted so that these individuals are aware of proper inspection and O&M procedures. This training schedule should also be incorporated into the O&M plan. All personnel should be familiar with the components of the O&M plan and their personal level of responsibility.

References

Barr Engineering Company. 2001. “Minnesota Urban Small Sites BMP Manual.

American Rivers. 2004 “Catching the Rain A Great Lakes Resource Guide for Natural Stormwater Management.”

Atlanta Regional Commission. 2001. “Georgia Stormwater Management Manual – Volume 2.” On-Line Address: http://www.georgiastormwater.com/

Barr Engineering Company. 2001. “Minnesota Urban Small Sites BMP Manual. Stormwater Best Management Practices for Cold Climates.” Metropolitan Council Environmental Services. St. Paul, Minnesota. July. Accessed on January 29, 2004. On-Line Address: http://www.metrocouncil.org/environment/Watershed/bmp/manual.htm

Brown and Schueler, Stormwater Treatment Practice (STP) Pollutant Removal Performance Database 2nd Edition. Center for Watershed Protection.

Center for Watershed Protection. 2000. “Grassed Filter Strip Fact Sheet”. Ellicott City, Maryland. On-Line Address: www.stormwatercenter.net

City of Chicago Department of Environment. 1998. City Trees: The City of Chicago’s Guide to Urban Tree Care. On-Line Address: http://www.cityofchicago.org/Environment/CityTrees/

City of Chicago. 2003. “Chicago’s Water Agenda.” Accessed on January 29, 2004. On-Line Address: http://www.cityofchicago.org/WaterManagement/wateragenda.pdf

City of Chicago Department of Zoning. 2003. Chicago’s New Zoning Ordinance (Landscape Ordinance). On-Line Address: http://www.cityofchicago.org/Mayor/Zoning/

City of Portland Environmental Services. 2002. “Stormwater Management Manual, Revision #2.” September. Accessed on January 29, 2004. On-Line Address: http: //www.cleanrivers-pdx.org/tech_resources/2002_swmm.htm

FHWA, Stormwater Best Management Practices in an Ultra-Urban Setting: Selection and Monitoring. On-Line Address: http://www.fhwa.dot.gov/environment/ultraurb/index.htm

Gerhold, H.D., W.N. Wandell, and N.L. Lacasse. 1993. “Street Tree Factsheets”. Penn State University, College of Agricultural Sciences. University Park, Pennsylvania.

Interlocking Concrete Pavement Institue. 2002. “Permeable Interlocking Concrete Pavements. 3rd Edition.”

King County. 1998. “King County, Washington, Surface Water Design Manual.” Department of Natural Resources. September.

Klein, Steve M., Barr Engineering Company. 1997. “Alternatives to Wet Detention Basins” presentation at 30th Annual Water Resources Conference. Minneapolis.

Low Impact Development (LID) Center. 2003. “LID Urban Design Tools.” Accessed on June 25, 2003. On-Line Address: http://www.lid-stormwater.net/intro/sitemap.htm Planning Resources Ifnc. 2003. “Calumet Design Guidelines, Draft.” Prepared for the Chicago Department of Planning and Development.

Maryland Department of the Environment. 2000. "Maryland Stormwater Design Manual." Baltimore, Maryland. On-Line Address: http://www.mde.state.md.us/Programs/WaterPrograms/SedimentandStormwater/stormwater_design/index.asp

Maine Department of Environmental Protection. 2003. "Maine Erosion and Sedimentation Control BMPs." On-Line Address: http://www.state.me.us/dep/blwq/docstand/escbmps/

Metropolitan Council of St. Paul, Minnesota. 2001. "Minnesota Urban Small Site BMP Manual." On-Line Address: http://www.metrocouncil.org/environment/Watershed/BMP/manual.htm

Michigan Department of Environmental Quality (MDEQ). 1992. "Parking Lot Storage." On-Line Address: www.deq.state.mi.us/documents/deq-swq-nps-pls.pdf

Michigan State University Extension. 2003. On-Line Address: www.msue.msu.edu

Mosman Municipal Council Environment and Planning Department. 1996. "Policy for On-site Stormwater Detention." On-Line Address: www.mosman.nsw.gov.au/policies/78732stormwater.pdf

Nassauer, J.I., B. Halverson, and S. Roos. 1997. "Bringing Garden Amenities Into Your Neighborhood: Infrastructure for Ecological Quality." Department of Landscape Architecture, University of Minnesota. Minneapolis.

Northeastern Illinois Planning Commission. 2000. "Urban Stormwater Best Management Practices for Northeastern Illinois." Course Handbook.

Northeastern Illinois Planning Commission. 1992. "Best Management Practice Guidebook for Urban Development."

Northern Virginia Planning District Commission (NVPDC). 1992. "Northern Virginia BMP Handbook: A Guide to Planning and Designing Best Management Practices in Northern Virginia." Annandale.

Nursery and Landscape Association. 1996. American Standard for Nursery Stock (ANSI Z60.1).

Ontario Ministry of the Environment. 1999. "Stormwater Management Planning and Design Manual. Draft Final Report." Toronto.

Pitt, R.E. 1994. "Stormwater Detention Pond Design for Water Quality Management (Draft)." Lewis Publishers.

Planning Resources Inc. 2003. "Calumet Design Guidelines, Draft." Prepared for the Chicago Department of Planning and Development.

Prince George's County, Maryland. 1999. "Low Impact Development: An Integrated Design Approach." Largo, Maryland.

Reston Association. 2003. "Watershed Management Plan." On-Line Address: http://www.reston.org/parks_rec/p_beautify.html#watershedplan

Schueler, Tom. 1987. "Controlling Urban Runoff: A Practical Manual for Planning and Designing Urban BMPs." Metropolitan Washington Council of Governments, Washington, D.C.

Statewide Urban Design and Specifications. 2001. "Urban Design Standards Manual." On-Line Address: http://www.iowasudas.org/design.cfm

University of Wisconsin-Madison. 2006 "Design Guidelines for Stormwater Bioretention Facilities."

U.S. Department of Agriculture (USDA). 1994. "Planning and Design Manual for the Control of Erosion, Sediment, and Stormwater." On-Line Address: http://www.abe.msstate.edu/csd/p-dm/

USDA Natural Resources Conservation Services (NRCS). 1997. "Native Plant Guide for Streams and Stormwater Facilities in Northeastern Illinois." Naperville, Illinois.

USDA – NRCS, and Illinois Environmental Protection Agency (IEPA) 2004. "Illinois Urban Manual." Accessed on January 30, 2004. On-Line Address: http://www.il.nrcs.usda.gov/technical/engineer/urban/

U.S. Army Corps of Engineers (USACOE). 1997. "Engineering and Design - Handbook for the Preparation of Storm Water Pollution Prevention Plans for Construction Activities." EP 1110-1-16.

U.S. Environmental Protection Agency (USEPA), Considerations in the Design of Treatment Best Management Practices (BMP) to Improve Water Quality, 2002. On-Line Address: http://www.epa.gov/ORD/NRMRL/pubs/600r03103/600r03103.pdf

USEPA. 2003. "National Menu of Best Management Practices for Storm Water Phase II." On-Line Address: http://cfpub2.epa.gov/npdes/stormwater/menuofbmps/menu.cfm

Urban Drainage and Flood Control District (UDFCD). 1992. "Urban Storm Drainage Criteria Manual, Volume 3: Best Management Practices, Stormwater Quality." Denver.

Valley Branch Watershed District. 2000. "Alternative Stormwater Best Management Practices Guidebook." Lake Elmo, Minnesota.

Virginia Department of Conservation and Recreation. 1999. Virginia Stormwater Management Handbook, Volumes 1 and 2, First Edition. Accessed on January 30, 2004. On-Line Address: http://www.dcr.state.va.us/sw/stormwat.htm

(This page intentionally blank.)

Appendices

A. Submittal Checklists

B. Hydrologic Analysis Methods

C. BMP Guidesheets

D. Case Studies

(This page intentionally blank.)

Appendix A: Submittal Checklists

The applicant should review this plan review checklist used by DOB.

PLAN REVIEW CHECK LIST

STORM SEWER AND SANITARY SEWER REQUIREMENTS:		
	Ch II, 3.2.1	RCP not allowed for pipe sizes less than 24” diameter
	Ch II, 3.2.3	Maintain minimum pipe slopes
	Ch II, 3.2.3	Confirm storm sewer flowing full velocity does not exceed 10 ft/sec
	Ch II, 3.3	Confirm that structures are large enough to make pipe connections
	Ch II, 3.2.2	Provide a 5 year minimum storm sewer calculation with a scaled drainage area map (required only at request of reviewer)
	Ch II, 3.2.2, 3.1	Provide 100 year capacity calculations for storm sewer system-maintain overflow routes (only required when storm sewers are used to convey overflow runoff)
	Ch II, 3.2.1	Confirm that there is adequate horizontal and vertical spacing between utilities
	Ch II, 3.2.1	Confirm all crossings are labeled with elevations for each pipe
	Ch II, 3.2.1, 3.2.3	Label all pipes with size, length, slopes, and material type
	Ch II, 3.2.4	Provide minimum pipe cover: VCP=3.0’, RCP=IDOT standards, and sanitary=3.5’
	Ch II, 3.3.1	Provide minimum structure spacing: 6”-10”=150’, 12”-54”=330’, 60”+=660’
	Ch II, 3.4.4	Do not exceed maximum connection size to sewer
	Ch II, 3.4	Maintain minimum spacing of 15 feet between private drain connections to the city sewer.
	Ch II, 3.4.4	Label size of existing city sewer; provide city sewer invert elevation at connection and invert of connecting sewer at connection.

GRADING AND DRAINAGE PLAN:		
	Ch III, 3.9 Ch II, 2.1	Provide sufficient grades to demonstrate proper drainage, as noted or checked below:
	Ch II, 3.1	Drainage from ROW and private property must be kept separate.
	Ch II, 3.1	No more than 400 sf impervious area sheet flow to the ROW.
	Ch II, 3.1	No more than 1500 square feet or 5 foot wide strip of contiguous at grade pervious area must sheet flow directly to the ROW.
	Ch II, 2.1.1	Show limits of maximum ponding and overflow locations.
	Ch III, 3.1	Min. freeboard requirement, 0.1 feet for HWL, overflow, and adjacent property.

	Ch II, 3.1	Min. gutter slope, 0.4%.
	Ch II, 3.1	Min. pavement slope, 1.0%.
	Ch II, 3.1	Provide CDOT standard detail of public alley cross-section.
	CDOT Std.	Follow CDOT/ADA standards for proper street and sidewalk grades.
	Appendix IIE, EFP	Meet City ordinance grades to within 0.2 feet
	Ch III, 3.14	Sites adjacent to waterways must discharge to and overflow to the waterway.
	Appendix IIE, EFP	Show proper restrictors in catch basins in ROW.
	Appendix IIE, EFP	No structures in the ROW without proper justification.
	Ch II, 3.1.1 App. IIB	Show location of downspouts.

DWM STANDARD DETAILS:		
	Ch II, 2.1	Provide DWM standard details for sewer structures, as noted or checked below:
	Ch III, 3.9	Show detail of restrictor and/or control roof heads.
	Ch II, 3.4	Show proper connection detail.
	Ch III, 4.1.1	Include special infiltration lid details, as needed.
	Ch II, 3.4	Provide detail of collar connection (with SE seal) to brick sewers.
	Ch III, 5.2.2	Provide signage for stormwater outfalls to waterways.
	Appendix IIE, EFP	Provide restrictors in catch basins in the ROW.

RATE CONTROL BMPS:		
--Detention Basins		
	Ch III, 3.2	If the outlet from a dry bottom basin is less than 2 feet above of the crown of the combined outlet sewer, a check valve must be installed to prevent combined sewerage from backing up into the basin.
	Ch III, 3.2	Dry bottom basins must be capable of draining within 72 hours of a storm event.
	Ch III, 3.2	Maintenance access to the facility must be provided.
	Ch III, 3.2	The bottom of the storage area in a detention basin must be above the seasonally high groundwater table.
	Ch III, 3.2	For wet detention basins, a safety ledge at least 4 feet in width must be constructed at a depth of 1 to 2 feet below the normal water surface.

	Ch III, 3.2	Wet detention basins without vegetation shall be at least 3 feet deep. The side slopes shall be no steeper than 3H:1V without erosion protection. The sides of the pond that extend below the safety and aquatic benches to the bottom of the pond must have a slope that will remain stable, and be no steeper than 2H:1V. For dry bottom detention basins, side slopes shall be 4H:1V or flatter.
	Ch III, 3.2	A sediment forebay shall be incorporated into all wet bottom detention basins.
	Ch III, 3.2	After excavation and grading of a stormwater wetland basin, at least 6 inches of topsoil must be applied to the basin bottom and sideslopes. Reference Stormwater Manual.
	Ch III, 3.2	At sites where infiltration is too rapid to sustain permanent soil saturation, analysis of the proposed plantings or intended wetland functions must be undertaken. If needed, an impermeable liner (geotextile fabric) shall be designed to maintain adequate hydrology. Where the potential for groundwater contamination is high, such as runoff from sites with a high potential pollutant load, the use of a liner is required.
	Ch III, 3.2	Basins incorporating wetlands shall include a buffer to separate the wetland from surrounding land where feasible.

--Detention Vaults		
	Ch III, 3.2	Detention vaults under buildings designed only for a 10-year storm capacity shall be provided with means to safely accommodate 100-year overflows.
	Ch III, 3.2	Buildings with underground storage vaults (with less than 100-year capacity) must have plans (with backup calculations) sealed by a licensed architect or structural engineer to safeguard against structural failure of floor foundations and downspouts due to hydrostatic pressures during sewer surcharges.
	Ch III, 3.2	Proper ventilation of underground vaults for buildings must be provided in accordance with Building Code Articles 9 and 11, as applicable, to equalize interior downspout pressures and to prevent siphoning effects through the piping and sewer systems.
	Ch III, 3.2	Vaults must be designed to be water-tight unless used for groundwater infiltration purposes or unless the bottom of the vault is at least 7 feet above the groundwater table.
	Ch III, 3.2	For vaults using infiltration*, soil must have at least a 0.5 in/hr infiltration rate or greater and the bottom of the vault must be at least 3.5 feet above the groundwater table when connected to a combined sewer. Means to control sediment and/or debris from entering the vault must be provided. Pretreatment measures are required for all infiltration vaults.
	Ch III, 3.2	If the outlet from a vault is lower than the crown of the combined outlet sewer, a check valve must be installed to prevent combined sewerage from backing up into the vault.

--Oversized Pipes		
	Ch III, 3.2	Locking manhole covers shall be provided for pipe diameters 4 feet and larger in areas where children may be present.
	Ch III, 3.2	If the outlet from an oversized pipe is lower than the crown of the combined outlet sewer, a check valve must be installed to prevent combined sewerage from backing up into the oversized pipe.
	Ch III, 3.2	Structures for oversize pipe must be properly sized.

--Parking Lot Detention		
	Ch III, 3.2	Maximum allowable ponding in a parking lot shall be 12 inches. If more than 10 inches of ponding, the O&M Plan must indicate such.
	Ch III, 3.2	Adequate visible warning must be provided for any depressed islands during flood stage.

--Rooftop Detention		
	Ch III, 3.2	Provide a grading plan of the roof and inlets to verify available storage.
	Ch III, 3.2	Show hydraulic characteristics of any controlled roof drains in the Plan.
	Ch III, 3.2	Show scuppers or overflows to accommodate 100-year storm events.
	Ch III, 3.2	Include approval and seal from a Registered Structural Engineer or Licensed Architect.
	Ch III, 3.2	In addition to other applicable code requirements, Sections 18-29-1105, 1106, and 1110 of the Municipal Code must be complied with.

--Restrictors		
	Ch III, 3.2	The maximum discharge released is equal to or less than the maximum permissible release rate for the site.
	Ch III, 3.2	DWM 3-inch and 4-inch vortex restrictors utilize 8-inch diameter outlet pipes to achieve release rates of 0.15 and 0.25 cfs, respectively.
		When specifying and installing vortex restrictors, the 3-inch vortex restrictor shall be obtained from DWM, and the 4-inch vortex restrictor shall be obtained from an approved manufacturer.
	Ch III, 3.2	Flow-restricting outlets shall be submerged in a catch basin, (i.e., with a half trap, and 2-foot minimum sump) to prevent clogging.
	Ch III, 3.2	Storage facilities upstream of restrictor with half trap must be clear of standing water.
	Ch III, 3.2	The minimum restrictor plate size is 2.5” in diameter.
	Ch III, 3.2	The restrictor must be easily accessible for DWM inspection and for owner inspection and maintenance.
	Ch III, 3.2	For sites that combine sanitary sewage and stormwater downstream from a restrictor, see the Stormwater Manual, Section 2.4.1 for recommended design guidelines.

VOLUME CONTROL BMPS:		
--Bioinfiltration Systems		
	Ch III, 4.2	The design of a bioinfiltration facility shall allow no more than 12 inches of depressional ponding in the vegetated area.
	Ch III, 4.2	The growing medium soil must be a mix of 40% sand, 30% topsoil and 30% compost. The soil must be at least 2 feet deep and must be 4 inches deeper than the largest planted rootball.
	Ch III, 4.2	The underlying soil shall have a permeability of 0.5 in/hr or greater. If the underlying soils do not meet the permeability requirement, underdrains may be installed.
	Ch III, 4.2	Bioinfiltration systems must be designed to drain within 5 days of a storm event.
	Ch III, 4.2	Soil borings or other data must verify that the depth to groundwater table is greater than 2 feet from the bottom of the BMP (or lowest excavated elevation), or 3.5 feet when connected to a combined sewer system.
	Ch III, 4.2	The water flowing to a bioinfiltration facility requires pretreatment for sediments. Where such pretreatment is not provided by an upstream BMP facility, it must be included in the bioinfiltration facility design.
	Ch III, 4.2	The bioinfiltration facility shall be located at least 10 feet down gradient from buildings, otherwise submit affidavit in Appendix IIB.
	Ch III, 4.2	Maintenance access to the facility must be provided.
	Ch III, 4.2	Measures to avoid clogging and compaction of the bioinfiltration facility are required during construction.
		If the bioinfiltration system includes storage in the void spaces of an aggregate layer, the aggregate layer must be completely surrounded by filter fabric and must be comprised of crushed angular stone free of fines. For IDOT gradations CA-1 and CA-7, the maximum aggregate porosity of 0.38 may be used.

--Drainage Swales		
	Ch III, 4.2	Velocities must be 1 ft/sec or less during the 2-year storm event.
	Ch III, 4.2	Longitudinal slope must be between 0.5 and 2.5%
	Ch III, 4.2	Utilize 3H:1V side slopes or flatter. Use slope protection when side slopes are steeper than 3H:1V.
	Ch III, 4.2	Surface volume control storage must be provided behind check dams or the infiltration benefit must be computed.
	Ch III, 4.2	The growing medium soil must be a mix of 40% sand, 30% topsoil and 30% compost. The growing medium soil must be at least 2 feet deep.
		If the drainage swale includes storage in the void spaces of an aggregate layer, the aggregate layer must be completely surrounded by filter fabric and must be comprised of crushed angular stone free of fines. For IDOT gradations CA-1 and CA-7, the maximum aggregate porosity of 0.38 may be used.
	Ch III, 4.2	Soil borings or other data must verify that the depth to groundwater table is greater than 2 feet from the bottom of the

		BMP (or lowest excavated elevation), or 3.5 feet when connected to a combined sewer system.
	Ch III, 4.2	The underlying soil shall have a permeability of 0.5 in/hr or greater. If the underlying soils do not meet the permeability requirement, underdrains may be installed.

--Green Roofs		
	Ch III, 4.2	A structural engineer or architect's seal must be included on the Plans to approve of load-bearing capacities of the proposed roofs.
	Ch III, 4.2	The maximum permissible slope for extensive green roof systems shall be 25 percent.
	Ch III, 4.2	The maximum permissible slope for intensive green roof systems shall be 10 percent.

--Natural Landscaping		
	Ch III, 4.2	Areas of natural landscaping shall be planted with deep-rooted vegetation.
	Ch III, 4.2	The soil must consist of sandy loam, loamy sand, or a loam with clay content less than 25% and sand content greater than 50%, or a prepared growing medium soil with a mix of 40% sand, 30% topsoil and 30% compost.

--Permeable Paving		
	Ch III, 4.2	Subsoils must have at least a 0.5 in/hr infiltration rate or greater. Otherwise, an underdrain system must be used if soil infiltration rates do not meet this requirement.
	Ch III, 4.2	The bottom of the aggregate shall be at least 2 feet above the groundwater table or bedrock, 3.5 feet if discharging to a combined sewer.
	Ch III, 4.2	Compaction of the soils underlying the permeable pavement system must be avoided during construction.
	Ch III, 4.2	Permeable pavement or infiltration systems must be situated at least 10 feet down gradient from buildings that are not water proofed against basement seepage, otherwise submit affidavit in Appendix II-B.
	Ch III, 4.2	Minimum and maximum slopes on permeable paving shall be 0.5 percent and 5 percent, respectively.
	Ch III, 4.2	All aggregate material shall be crushed angular stone and free of fines. For IDOT gradations CA-1 and CA-7, the maximum aggregate porosity of 0.38 may be used.
	Ch III, 4.2	When using an underdrain system, the water level within the underlying stone base may not rise to within 8 inches of the permeable pavement surface for a 10 year storm event.
	Ch III, 4.2	The underlying stone base must be designed to drain within 48 hours of a storm event.
	Ch III, 4.2	When using an underdrain system, any impermeable subsoil material must be graded with a minimum 1 percent slope to such system, and the top 3 inches of impermeable soil must be mixed with at least 3 inches of sand.

	Ch III, 4.2	For pervious concrete, signage must be placed on the property that states, “This surface is pervious concrete pavement. No sealcoat or overlay material is to be used on this pavement. Call XXX-XXXX before treating this pavement with any material.” Insert the number of the property management company.
		When an area of conventional impervious pavement drains toward permeable pavement, a maximum ratio of 3:1 impervious to permeable is allowed.

--Rooftop Runoff BMPs (Planter Boxes, Rain Barrels and Cisterns)		
	Ch III, 4.2	If a rain barrel or above ground cistern will hold more than a 6-inch depth of water below the drain, it must be securely covered to prevent small children from gaining access to the standing water and to prevent mosquitoes from breeding.
	Ch III, 4.2	Above ground cisterns with a capacity of more than 55 gallons must be designed with proper structural foundations.
	Ch III, 4.2	Rain barrels and cisterns must include inlet screens to minimize the number of foreign objects entering the vessels.
	Ch III, 4.2	Excess water entering the rain barrel or cistern must be designed to overflow to a treatment train or stormwater conveyance system.
	Ch III, 4.2	The system must have a convenient and functional means of water withdrawal.
	Ch III, 4.2	The system, if applicable to stormwater detention, will receive credit for up to 10 percent of the required site storage and must be drained within 14 days of a storm event.

--Stormwater Trees		
	Ch III, 4.2	New trees or existing trees must be on the development site within 20 feet of an on-site impervious surface to count as a volume control BMP. They must also be at least 2 inches in diameter at 4.5 feet above ground level.

--Vegetative Filter Strips		
	Ch III, 4.2	The entire filter strip area shall be more than 2 feet above the groundwater table.
	Ch III, 4.2	Filter strips must have longitudinal slopes of 1 to 5 percent (2 percent optimum) in the direction of flow.
	Ch III, 4.2	The longest flow path of the contributing drainage areas must not exceed 75 feet.
	Ch III, 4.2	A level spreader is required whenever the tributary area is not uniformly sloped toward the filter strip..
	Ch III, 4.2	When filter strips are used to accept roof runoff for the purposes of volume control, a level spreader must be utilized. The hydraulic loading rate may not exceed 75 feet of roof per one foot of filter strip width.
	Ch III, 4.2	The soil must consist of sandy loam, loamy sand, or a loam with clay content less than 25% and sand content greater than 50%, or a prepared growing medium soil with a mix of 40% sand, 30% topsoil and 30% compost. The approved soil type must be at least 18 inches deep.
	Ch III, 4.2	The slope upgradient of a level spreader must be less than 1 percent for at least 20 ft while the slope downgradient must be less than 6 percent.
	Ch III, 4.2	The length and depth of the level spreader must be at least 6 inches.
	Ch III, 4.2	Level spreader must be absolutely level along its width.

STORMWATER CALCULATIONS:		
	Ch III, 4.4	Provide sufficient volume control runoff calculations, as noted or checked below:
	Ch III, 3.9	Provide sufficient rate control runoff calculations, as noted or checked below:
	Ch III, 3.4.2, 3.9	Provide sufficient backup for release rates, calculations and/or drainage areas.
	Ch III, 3.4.5	Proposed discharge rate cannot exceed existing discharge rate.
	Ch III, 3.7	Submit separate calculation form for each restrictor/drainage area.
	Ch III, 3.9	Submit documentation of existing drainage and DWF conditions.
	Ch III, 3.8.1	Utilize frustum of cone equation for available surface ponding.
	Ch III, 3.7.1	Storage in ROW must be accessible and conform with available street grades.
	Ch II, 3.5	DWF (without peaking factors) exceeding 10% of the release rate must be considered in the overall release rate.
	Ch II, 3.4.2	Uncontrolled runoff from impervious areas must be compensated by a decrease in discharge at other outlets.
	Ch III, 3.6	Restrictors must be sized in accordance with the maximum release rate and upstream tributary area.
	Ch II, 3.5 Ch III, 4.1.4	Reduce restrictor size to fully utilize available volume.
	Ch II, 3.6	Flow diversion must be considered (i.e., reduction in release rates) for vacant lots or change in existing connection locations.
	Ch II, 3.1.2	Provide 25 year calculation check for by-pass flows onto site.
	Ch III, 3.1.5	Provide calculations for building rehabilitations exceeding 15,000 sf.
	Ch III, 4.3	Provide adequate geotechnical information (i.e., # of soil borings).
	Ch III, 4.3	Provide percolation tests to substantiate infiltration rate above 1.4”/hr
	Ch III, 3.5.1	Submit sewer connection alternative analysis for sites greater than 1.75 acres.

SEDIMENT AND EROSION CONTROL PLAN:		
	Ch III, 5.2.2	Submit Erosion Control Plan for sites adjacent to waterways with revisions, as noted or checked below:
	Ch III, 5.2.2	Show permanent stabilization measures including landscape seeding and sodding plans.
	Ch III, 5.2.2	Provide means of accommodating 2-year stormwater flows onsite and by-passed during construction.
	Ch III, 5.2.2	Provide proper maintenance schedule for each erosion control measure. During construction, each erosion control measure shall be inspected weekly or after more than 0.5-inch of rainfall.
	Ch III, 5.2.2	Show temporary erosion and sediment control measures applicable to each phase of construction activity.

O&M PLAN:		
	Ch III, 6.1	Submit O&M Plan for Regulated developments with revisions, as noted or checked below:
	Ch III, 6.2	O&M Plan must be signed by the owner and notarized using the Operation and Maintenance Plan Owner's Certification Statement, Appendix II-A, Sheet A.22. A copy of the O&M plan must be provided to each new owner before the consummation of a sale, and the O&M Plan must be signed by the new owner, notarized, and submitted to the City to be kept on record.
	Ch III, 6.2	O&M Plan procedures and practices must be reviewed and assessed annually.
	Ch III, 6.2	Access routes including roadways and sidewalks shall be inspected annually and maintained as needed.
	Ch III, 6.2	Drainage structures and flow restrictors must be inspected and cleaned semi-annually.
	Ch III, 6.2	Volume control BMPs shall be inspected semi-annually and after significant rainfall events exceeding 1.5 inches.
	Ch III, 6.2	The Owner shall keep an updated log book documenting the performance of the required O&M activities for perpetuity. Log books must be produced upon the request of a City inspector.
	Ch III, 6.2	Vegetation shall be maintained on a regular basis.
	Ch III, 6.2	Pest control measures shall be implemented to address insects and rodents.
	Ch III, 6.2	Signage and fencing shall be installed and maintained where necessary to protect property and the public.

	Ch III, 6.2	Underground vaults must include design measures to facilitate cleaning and maintenance. Confined space safety procedures must be followed.
	Ch III, 3.8.2	Include dewatering schedule for stormwater capture facilities.
	Ch III, 3.2	Identify areas with more than 10-inches of surface ponding.

OTHER SUBMITTALS AND REQUIREMENTS		
	Ch III, 4.2	Provide Affidavit for Infiltration and Disconnection of Downspouts, Appendix IIB.
	Ch III, 5.2.1	Provide Affidavit for Soil Erosion and Sediment Control, Appendix IIC.
	Ch II, 4.0	Contact DWM for sewer work in the ROW/easements.
	Ch III, 2.0.2	Contact DWM for variances or unclear storage requirements.
	Ch III, 2.0.4	Requires Plan Amendment Submittal
	Ch II, 3.4, 4.0.1 Ch III, 2.0, 2.0.5	Provide proper professional seals on plans.

Reference DWM Stormwater Regulations, 11-18-110 of the Municipal Code

(This page intentionally blank.)

Appendix B: Hydrologic Analysis Methods

Hydrologic Analysis Methodologies

Hydrologic analysis requires applying the concepts of urban hydrology to estimate the amount of runoff generated from precipitation falling on the development site. Hydrology is not an exact science, and hydrologic procedures are therefore approximate. In most situations, site-specific data are seldom available. It is therefore quite common to use semi-empirical relationships and alternative sources of data in hydrologic analyses. Calibration or adjustment of such data to reflect site-specific characteristics is highly recommended.

This appendix briefly discusses hydrologic analysis methodologies used in calculations required for stormwater management. The purposes of this appendix are (1) to assist the applicant in choosing the appropriate level of hydrologic analysis for the development site and (2) to provide the applicant with methodologies needed to design stormwater management systems for the development site. The Rational Method is described in detail as well as the Modified Rational Method used by the City of Chicago (City) for detention calculations. Several other methodologies are also discussed. These methodologies may be needed for more complex analysis.

RATIONAL METHOD

The Rational Method is an empirical approach used to estimate peak flows in small urban watersheds. The subsections below discuss data considerations, the equations and parameters for the method, and the applicability and limitations of the method. The basis for the discussion below is *Applied Hydrology* (Chow and others 1988). The charts, graphs, and tables included in this section are not intended to replace reasonable and prudent engineering judgment.

Data Considerations

Site-specific data must be gathered before hydrologic analysis can begin. Typical data to be gathered include topographic maps, storm sewer maps, aerial photographs, stream flow records, historical high water elevation data, flood discharge data, and locations of hydraulic structures such as outfalls and road crossings. Such data are used to determine the following:

- Watershed characteristics, including size, shape, slope, land use, soil type, surface infiltration, and storage
- Flow-path characteristics, including geometry, configuration, and natural and artificial controls

In addition, rainfall data must be collected. The quality of the rainfall data available is the single most important factor affecting the accuracy of final hydrologic analysis results. The Chicago Department of Water Management (DWM) requires the use of the City rainfall data to perform all hydrologic analyses of stormwater management facilities. The City rainfall data are included in Table B-1 and consist of rainfall intensity durations for various return frequencies and associated rainfall intensity frequency curves. For regulatory purposes, other jurisdictions such as the Metropolitan Water Reclamation District of Greater Chicago (MWRDGC) or Illinois Department of Transportation (IDOT) may require the use of sources of rainfall data that differ from the City rainfall data shown in Table B-1. The City of Chicago may require the use of the Illinois State Water Survey (ISWS) Bulletin 70 rainfall data (Huff and Angel 1989) on sites larger than 20 acres. The applicant must consult with the

relevant jurisdictions to obtain approval of the rainfall data used prior to performing any hydrologic analyses.

Equations and Parameters

The basis for the Rational Method is that if a rainfall of intensity "i" begins instantaneously and continues indefinitely, the rate of runoff will increase until the time when the whole watershed is contributing to flow at the outlet - referred to as the time of concentration (T_c). The Rational Method is expressed by the following equation:

$$Q_p = k_c * C * i * A \qquad \text{(B-1)}$$

where

Q_p = Peak flow (cubic feet per second [cfs])

k_c = Conversion factor to convert acre-inch per hour to cfs, approximately equal to 1

C = Runoff coefficient (unitless)

i = Rainfall intensity (inch per hour)

A = Catchment area contributing flow to the outlet (acres)

Equation variables C, i, and A are discussed below.

Runoff Coefficient (C) - The runoff coefficient is the least precise parameter in the Rational Method equation. It is known, however, that because impervious surfaces such as asphalt parking lots convert almost all rainfall into runoff, the coefficient for such surfaces is close to 1.0. By contrast, pervious surfaces such as lawns have much smaller C-values because a significant portion of the rainfall infiltrates (or is lost) into the ground. The DWM has developed a table that presents recommended C-values for different percentages of impervious area potential for various surfaces to generate runoff. These tables are presented in the MS Excel spreadsheet discussed in Section 2.0. Because few sites are homogenous, an overall representative C-value or composite runoff coefficient can be determined based in part on the percentage of different types of surfaces in the drainage area.

The composite or area-weighted runoff coefficient of a site can be calculated using the following equation:

$$C_w = (A_1C_1 + A_2C_2 + A_3C_3) / (A_1 + A_2 + A_3) \qquad \text{(B-2)}$$

where

C_w = Area-weighted runoff coefficient (unitless)
A_n = Area of sub-area "n" (square feet [ft^2])
C_n = Runoff coefficient for subarea "n" (unitless)

TABLE B-1

CITY OF CHICAGO RAINFALL INTENSITIES AND DEPTHS

City of Chicago
Department of Water Management

Name of Project: _____
Address: _____
A/E of Record: _____

(FOR COMPUTATIONS AND REFERENCE)

City of Chicago Intensity-Duration-Frequency (IDF) Curve
(Based on Bulletin 70 Rainfall Data)

	Storm Event in Years									
	5-Year		10-Year		25-Year		50-Year		100-Year	
Storm Duration (min)	Rainfall (in)	Average Intensity (in/hr)	Rainfall (in)	Average Intensity (in/hr)	Rainfall (in)	Average Intensity (in/hr)	Rainfall (in)	Average Intensity (in/hr)	Rainfall (in)	Average Intensity (in/hr)
5	0.46	5.520	0.54	6.480	0.66	7.920	0.78	9.360	0.91	10.920
10	0.84	5.040	0.98	5.880	1.21	7.260	1.42	8.520	1.67	10.020
15	1.03	4.120	1.21	4.840	1.49	5.960	1.75	7.000	2.05	8.200
30	1.41	2.820	1.65	3.300	2.04	4.080	2.39	4.780	2.80	5.600
60	1.79	1.790	2.10	2.100	2.59	2.590	3.04	3.040	3.56	3.560
120	2.24	1.120	2.64	1.320	3.25	1.625	3.82	1.910	4.47	2.235
180	2.43	0.810	2.86	0.953	3.53	1.177	4.14	1.380	4.85	1.617
360	2.85	0.475	3.35	0.558	4.13	0.688	4.85	0.808	5.68	0.947
720	3.31	0.276	3.89	0.324	4.79	0.399	5.62	0.468	6.59	0.549
1080	3.50	0.194	4.11	0.228	5.06	0.281	5.95	0.331	6.97	0.387
1440	3.80	0.158	4.47	0.186	5.51	0.230	6.46	0.269	7.58	0.316
2880	4.09	0.085	4.81	0.100	5.88	0.123	6.84	0.143	8.16	0.170
4320	4.44	0.062	5.18	0.072	6.32	0.088	7.41	0.103	8.78	0.122
7200	4.91	0.041	5.70	0.048	6.93	0.058	8.04	0.067	9.96	0.083
14400	6.04	0.025	6.89	0.029	8.18	0.034	9.38	0.039	11.14	0.046

Rainfall Intensity (i) - Rainfall intensity is the average rate of rainfall in inches per hour. The intensity value is selected based on the design frequency of occurrence, a statistical parameter established by design criteria and rainfall duration. Rainfall intensities for various storm frequencies and durations are obtained from Table B-1, which depicts the City rainfall data up to a 100-year storm event and for storm durations from 5 minutes to 24 hours.

Area (A) – Area is the drainage area and is typically calculated in acres. The drainage area is the entire area from which runoff eventually ends up at one point. To apply the Rational Method, an accurate, detailed topographic map of the site is needed to define the boundaries of the drainage areas in question. A field inspection of the area should also be conducted to determine if natural drainage divides have been altered.

Applicability and Limitations of the Rational Method

The Rational Method is best applied to small watersheds of less than 20 acres. Characteristics of the Rational Method which limit its use to small watersheds are summarized below.

- The rate of runoff resulting from any storm is at a maximum when the storm lasts as long or longer than the time of concentration (T_c) (that is, the entire drainage area does not contribute to the peak discharge until the time of concentration has elapsed). This assumption limits the size of the drainage basin that can be evaluated using the Rational Method. For large drainage areas, the time of concentration can be so large that constant rainfall intensities for such long periods do not occur, and shorter, more intense rainfalls can produce larger peak flows.

- The fraction of rainfall that becomes runoff is assumed to be independent of rainfall intensity. This assumption is reasonable for impervious areas, such as streets, rooftops, and parking lots. For pervious areas, the fraction of runoff varies with rainfall intensity and the accumulated volume of rainfall. Thus, application of the Rational Method involves the selection of a coefficient that is appropriate for the storm, soil, and land-use conditions at the development site.

- The peak rate of runoff is assumed to be sufficient information for designing storm sewers and culverts. Modern drainage practices often include detention of urban storm runoff to reduce the peak rate of downstream runoff. The Rational Method severely limits the evaluation of design alternatives available in urban and in some instances rural drainage areas because it is based on peak runoff rates only.

- The frequency of peak discharges is the same as that of the rainfall intensity for the given time of concentration (T_c). Frequencies of peak discharges depend on rainfall frequencies, antecedent moisture conditions in the watershed, and the response characteristics of the drainage system. For small and largely impervious areas, rainfall frequency is the dominant factor. For larger drainage basins, the response characteristics control the frequency of the peak runoff. For drainage areas with few impervious surfaces, antecedent moisture conditions usually govern frequency of peak discharges, especially for rainfall events with a return period of 10-years or less.

- Restrictions to the natural flow (storage areas) such as highway crossings in the drainage area may cause the time of concentration (T_c) to increase, changing the runoff characteristics.

MODIFIED RATIONAL METHOD

The City uses the Rational Method in a slightly different manner. The same basic equation is used (Equation B-1), but the City incorporates several assumptions to simplify the process. Modifications to the Equation B-1 variables C, i, and A are discussed below as well as the methodology used to calculate detention volume requirements.

Runoff Coefficient (C) - By assuming an instantaneous time of concentration (T_c), the runoff coefficients (or C-values) can be defined in terms of runoff volume rather than runoff flow rate. This approach dramatically simplifies the stormwater management process because it allows the volume reduction calculations for the best management practices (BMP) to directly modify the C-values based on the following equation (this calculation is performed by the **Stormwater Spreadsheet Tool**):

$$C_r = C_o * (V_r/V_o) \qquad \text{(B-3)}$$

where

C_r = Runoff coefficient after the volume reduction BMP is considered (unitless)

C_o = Runoff coefficient without the volume reduction BMP (unitless)

V_r = Volume of runoff after volume reduction BMP is considered (ft^3)

V_o = Volume of runoff without volume reduction BMP (ft^3)

Rainfall intensity (i) - For the Rational Method, the critical rainfall intensity is the rainfall having duration equal to the time of concentration (T_c) of the drainage basin. To simplify calculations, the City usually does not require the calculation of T_c. The City has developed a simple table of different rainfall intensities for the 100-year storm (see Figure 3-1 in Section 3.2 of this Manual). The table calculates the detention volume required for each intensity, and the detention required is the maximum volume of all the intensities for each area combined.

Area (A) - Typically in the City, the drainage area is defined as the area that discharges into a sewer outlet.

Detention - The City methodology for determining detention or storage volume involves calculating a required storage volume for a series of storm durations and intensities from 5 minutes to 24 hours using the following equation:

$$V_s = (Q_i - Q_o) * t \qquad \text{(B-4)}$$

where:

V_s = Storage volume (cubic feet [ft^3])

Q_i = Inflow rate (cfs)

Q_o = Release rate (cfs)

t = Storm duration (seconds)

The largest calculated storage volume is then selected as the amount of detention or storage required.

The inflow rate is calculated using Equation B-1 with the runoff coefficient and drainage area specified as characteristics of the watershed. The inflow rate is the flow entering the detention basin; it would equal the peak flow calculated in Equation B-1 if the detention basin is designed to detain all the runoff from the area for which the peak flow was calculated. Otherwise, inflow rate is a percentage of peak flow. The rainfall intensities for each storm duration are presented in Table B-1. The release rate is determined by the detention facility outlet. Section 3.0 describes the calculation of detention volume.

OTHER METHODOLOGIES

Other methodologies can be used to determine the appropriate stormwater runoff volume from a watershed. Hydrograph methods predict the runoff or hydrograph from a site as a function of time. Hydrograph methods produce both peak discharges and runoff volumes. Hydrograph methods are further described as “single event” or “continuous” models depending on the manner used to generate the hydrograph. Continuous models are able to model the complex interactions of precipitation and evaporation over time.

For large watersheds exceeding 20 acres, a more complex approach to computing runoff may be more appropriate than use of the Rational or Modified Rational Methods. Complex approaches may also be necessary if the watershed drainage pattern is complicated by presence of significant flow-modifying structures. Such situations generally warrant a more complex hydrologic model using hydrograph procedures. The applicant should consult with DWM/DOB regarding appropriate hydrograph procedures for determining the stormwater detention requirements.

The most commonly used hydrograph modeling packages are summarized below.

HEC-1 and HEC-HMS - The U.S. Army Corps of Engineers Hydrologic Engineering Center (HEC) developed the Flood Hydrograph Package HEC-1. This model has been replaced by the Hydrologic Modeling System (HEC-HMS), which was derived from the HEC–1 model and which performs similar calculations within a graphical context. HEC-HMS is used to simulate single events or continuous precipitation covering a variety of precipitation and runoff processes. The precipitation model provides options to include historical or hypothetical storm event data or a specific weighted-gage method. Modeling can be performed in a linear or consolidated manner by using various methods to determine losses, including the use of National Resource Conservation Service (NRCS) Curve Numbers. Information for obtaining HEC-HMS software and support documentation is available at www.hec.usace.army.mil/

Technical Release No. 20 – NRCS developed Technical Release No. 20, “Computer Program for Project Formulation – Hydrology” (TR-20). This program has been modified by the NRCS and other groups. The program is used to simulate single-event precipitation covering a variety of runoff processes and can process data for multiple storm events in a single computer run. TR-20 uses the procedures described in the National Engineering Handbook, Section 4, Hydrology (NRCS NEH-4).

Information for obtaining TR-20 software and support is available at www.wwc.nrcs.usda.gov/water/quality/frame/hydrology.html

Technical Release No. 55 - Technical Release No. 55, "Urban Hydrology for Small Watersheds" (TR-55), presents simplified procedures to calculate storm runoff volume and peak rate of discharge, generate hydrographs, and calculate storage volumes required for detention structures. The release's primary function is determining curve numbers and times of concentration. Information for obtaining Technical TR-55 software and support is available at www.wwc.nrcs.usda.gov/water/quality/frame/hydrology.html

Stormwater Management Model (SWMM) - Under the sponsorship of the U.S. Environmental Protection Agency (EPA), a comprehensive SWMM capable of representing urban stormwater runoff and combined sewer overflow phenomena was developed. SWMM can be run in a single-event mode or in a continuous manner. SWMM simulates the runoff of a drainage basin for any prescribed rainfall pattern incorporating both water quantity and quality aspects associated with urban runoff and combined sewer systems. Information for obtaining the SWMM software and support documentation is available at www.epa.gov/ednnrmrl/swmm/

REFERENCES

Chow, V.T, and others. 1988. *Applied Hydrology.* McGraw-Hill, Inc., Burr Ridge, IL.

Huff, F.A., and J.R. Angel. 1989. "Rainfall Distributions and Hydroclimatic Characteristics of Heavy Rainstorms in Illinois." Bulletin 70, Illinois State Water Survey.

(This page intentionally blank.)

Appendix C: BMP Guidesheets

BMP

Bioinfiltration Systems	**C-2**
Drainage Swales	**C-7**
Green Roof	**C-13**
Natural Landscaping and Stormwater Trees	**C-17**
Permeable Pavement	**C-20**
Roof Runoff BMPs	**C-25**
Vegetated Filter Strips	**C-30**
Detention Systems (including infiltration vault)	**C-34**

BIOINFILTRATION SYSTEMS GUIDESHEET

Overview

Bioinfiltration systems are features such as basins or trenches that collect stormwater from surrounding impervious areas. These flow regulating structures pass inflow through a shallow depressed area containing plants, mulch, and a prepared soil. A rain garden is a good example of a bioinfiltration system. Bioinfiltration is very effective at reducing runoff volume and removing pollutants, especially when used as parking lot islands. As with drainage swales and vegetated filter strips, bioinfiltration systems work best when used to collect runoff from small storm events. In some cases, bioinfiltration systems can be used in conjunction with sewer systems by incorporating underground perforated pipes or overflow inlets. The following sections provide Design Guidelines, Minimum Design Requirements, Maintenance Guidelines and a Worksheet for quantifying BMP performance to comply with the Chicago Stormwater Management Ordinance and Regulations.

Design Guidelines

Bioinfiltration systems should be located at least 10 feet downgradient (10 feet laterally, with flow directed away from structure) from structures so that water does not drain into the foundations of the structures. As with the other infiltration BMPs, the subsoils must have a design infiltration rate of at least 0.5 inches per hour. When subsoils do not meet the minimum design infiltration rate, the BMP may still be implemented by using an underdrain.

The primary components of a bioinfiltration system are:

- Pretreatment
- Inlet
- Surface storage (ponding area)
- Organic layer or hardwood mulch
- Growing medium soil
- Native plantings
- Gravel storage bed
- Underdrain, if necessary
- Positive overflow

Pretreatment Pretreatment is recommended for bioinfiltration facilities. Pretreatment prolongs the life of the system by reducing sediment and other pollutant inputs. Bioinfiltration systems work best when pretreatment is provided in the form of drainage swales or vegetated filter strips to reduce the amount of sediment that reaches the infiltration facility. If pretreatment is not provided by an upstream BMP, then it must be designed into the bioinfiltration system by using a plunge pool or sediment forebay sized for 10 percent of the total design storage. If pretreatment is provided within the BMP, the maintenance and the plan should identify the need for removal of sediment from the pretreatment area.

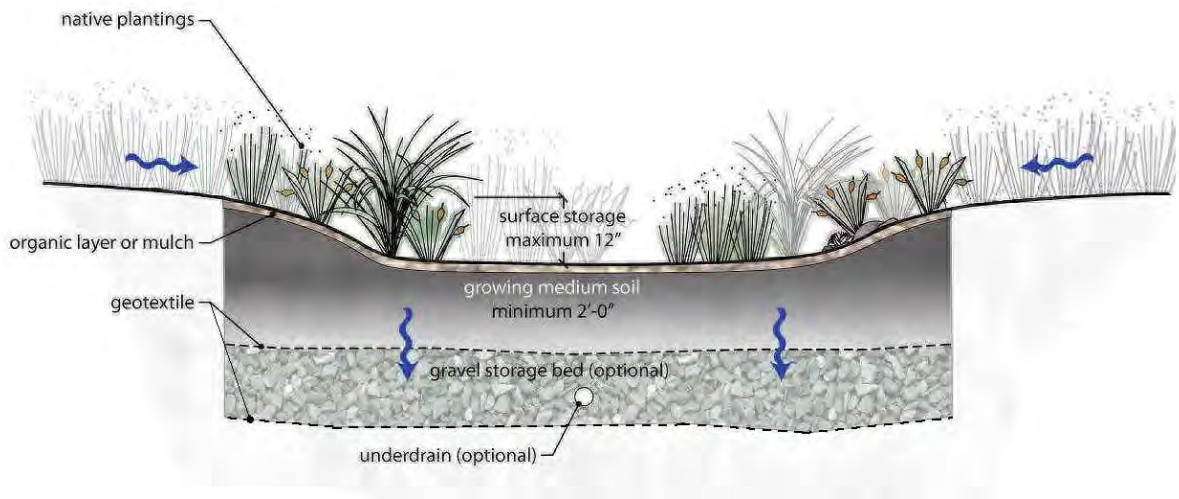

Figure 1: Typical Bioinfiltration Facility

Inlet It is preferred to route runoff to a bioinfiltration area via sheet flow over a filter strip. This is not always possible due to site constraints or space limitations. On sites where curb removal is not an option or where flow is concentrated by the time it reaches the bioinfiltration area, curb cuts coupled with energy dissipators provide an alternative runoff inlet. Disconnected roof leaders that flow into bioinfiltration areas also require energy dissipators to prevent erosion in the bed. Energy dissipation can be provided by cobbles underlain by geotextile fabric.

Surface Storage Surface storage provides temporary storage of stormwater runoff before infiltration and evaporation can occur within the bioinfiltration system. Ponding time provides water quality benefits by allowing larger debris and sediment to settle out of the water. Ponding design depths must be less than 12 inches in order to reduce hydraulic loading of underlying soils, minimize facility drainage time, and prevent standing water.

Organic Layer or Hardwood Mulch An organic layer or mulch can provide a medium for biological growth, decomposition of organic material, adsorption, and bonding of heavy metals. The mulch layer can also serve as a sponge that absorbs water during storms and retains water for plant growth during dry periods.

Growing Medium Soil The planting soil provides a medium suitable for plant growth. The planting soil also acts as a filter and as a hydrologic buffer between the surface storage and the native soil. The prepared planting soil must be at least 2 feet deep and provides additional storage while the water infiltrates into the underlying aggregate or native soil. Storage volume is a function of both soil porosity, soil depth and the size of the bioinfiltration area.

Native Plantings The plant material in a bioinfiltration system binds and removes nutrients and stormwater pollutants through vegetative uptake, removes water through evapotranspiration, and creates pathways for infiltration through root development and plant growth. A varied plant community is recommended to avoid susceptibility to insect and disease infestation and ensure viability. A mixture of groundcover, grasses, shrubs, and trees is recommended to create a microclimate that can ameliorate urban stresses as well as discourage weed growth and reduce maintenance.

Gravel Storage Bed A gravel storage layer can be included to provide storage below the growing medium soil. It must be separated from the growing medium with a layer geotextile fabric. The storage layer should be designed to drawdown in less than 5 days based simply on the design infiltration rate. For example, when considering the depth of surface storage (one foot) and growing medium soil (two feet) and the minimum required design infiltration rate of 0.5 in/hr, the storage bed could be up to 2 feet deep (0.5in/hr / 12in/ft * 5days * 24hours – (3 feet)).

Underdrain An underdrain is a perforated pipe that collects water at the bottom of the system and conveys it to the system outlet. Underdrains intercept, collect, and convey stormwater that has percolated through growing medium soil, a geotextile fabric and a suitable aggregate. When minimum native soil infiltration requirements cannot be met, an underdrain may be employed. Underdrains eliminate most infiltration because they provide a preferential pathway for flow. A sand layer or gravel filter should surround the underdrain to filter sediment and facilitate flow to the underdrain. Underdrains should be located at least six inches from the bottom of the facility.

Positive Overflows A positive overflow is provided at the maximum ponding depth. When runoff exceeds system storage capacity, the excess flow leaves the system through the positive overflow. The overflow can connect to a system that will provide peak rate control.

Minimum Design Requirements
The design of a bioinfiltration facility shall allow no more than 12 inches of depressional ponding in the vegetated area.
The growing medium soil must be a mix of 40% sand, 30% topsoil and 30% compost. The soil must be at least 2 feet deep and must be 4 inches deeper than the largest planted rootball.
The underlying soil shall have a permeability of 0.5 in/hr or greater. If the underlying soils do not meet the permeability requirement, underdrains may be installed.
Bioinfiltration systems must be designed to drain within 5 days of a storm event.
Soil borings or other data must verify that the depth to groundwater table is greater than 2 feet from the bottom of the BMP (lowest excavated elevation), or 3.5 feet when connected to a combined sewer system.
The water flowing to a bioinfiltration facility requires pretreatment for sediments. Where such pretreatment is not provided by an upstream BMP facility, it must be included in the bioinfiltration facility design.
The bioinfiltration facility shall be located at least 10 feet downgradient (10 feet laterally, with flow directed away from building) from buildings.
Maintenance access to the facility must be provided.
Measures to avoid clogging and compaction of the bioinfiltration facility are required during construction.
The design of a bioinfiltration facility shall allow no more than 12 inches of depressional ponding in the vegetated area.

Maintenance Guidelines

Properly designed and installed bioinfiltration systems require little maintenance. During periods of extended drought, bioinfiltration systems may require watering approximately every 10 days.

Activity Schedule

As needed	• Water plants during first growing season • Water plants during dry periods after first growing season • Remulch void areas • Treat diseased trees and shrubs • Keep overflow free and clear of leaves
Monthly	• Inspect soil and repair eroded areas • Remove litter and debris • Clear leaves and debris from overflow
Twice per year	• Inspect trees and shrubs to evaluate health
Once per year	• Add additional mulch • Inspect facility and pretreatment areas for sediment buildup, erosion, vegetative conditions, etc.

Worksheet

The worksheet on the following page is available electronically as part of the City of Chicago Stormwater Spreadsheet Tool.

2.1.1 Bioinfiltration Systems

Section 1 Upstream Drainage Area				
1	Upstream impervious area including BMP area	A_t		square feet
2	Upstream weighted C-value (C-value=1.0 for bioinfiltration area for direct rainfall)	C		unitless
3	Volume of upstream runoff from a 1-inch storm = C * A_t * 1/12	$V_{upstream}$	0	cubic feet
4	Describe upstream drainage area			
5	Describe upstream pretreament or integration of pretreatment into BMP			

Section 2 BMP Feasibilty				
6	Design soil infiltration rate (must be 0.5 in/hr or greater unless underdrain system is used)	i		in/hr
7	Elevation of bottom of BMP (the infiltration surface)	$ELEV_{BMP}$		feet
8	Groundwater elevation	$ELEV_{GW}$		feet
9	Depth to seasonal groundwater (Must be 2 feet or greater, or 3.5 feet or greater if draining to combined sewer)	D_{GW}	0.0	feet

Section 3 BMP Specifications				
10	Dimensions of the bioinfiltration facility (length, width, or area)	L		feet
		W		feet
		A_{BMP}		square feet
11	Depth of prepared soil	D_1		feet
12	Prepared soil porosity (0.25 maximum unless detailed materials report provided)	P_1		feet
13	Depth of underlying aggregate (optional)	D_2		feet
14	Aggregate porosity (0.38 maximum unless detailed materials report provided)	P_2		feet
15	Surface storage volume (provide supporting calculations, max depth 12 inches)	V_{AIR}		cubic feet
16	Soil media storage volume = A_{BMP} * [(D_1 * P_1) + (D_2 * P_2)]	V_{SOIL}	0	cubic feet

Section 4 BMP Performance				
17	Volume of upstream runoff (Line 4)	$V_{upstream}$	0	cubic feet
18	Storage Provided = V_{AIR} + V_{SOIL}	V_{BMP}	0	cubic feet
19	V_{total} (equals lesser of V_{BMP} or $V_{upstream}$)	V_{total}	0	cubic feet

DRAINAGE SWALES GUIDESHEET

Overview

Runoff can be conveyed through either a constructed channel (such as a ditch or swale) or a natural channel. Constructed channels can be designed purely for conveyance, or can include measures to enhance infiltration such as check dams. If designed according to the design guidelines, the swale may take credit for the storage in the prepared soil layer. Swales may also be designed to provide additional storage by providing check dams or a gravel storage bed. The storage behind check dams may be counted as volume control storage as well as the void space in the underlying storage aggregate. Swales or unlined ditches and natural channels are superior to conventional storm sewers because they allow water infiltration and can remove pollutants if they are vegetated. Swales can be planted with native vegetation to provide enhanced wildlife habitat and to increase the amount of runoff removed by transpiration and evaporation. If at all possible, natural drainageways should be preserved as part of the development site's drainage system. Another advantage of swales, ditches, and natural channels is their low capital cost. Swales and ditches can be designed to convey both high and low flows but may be difficult to implement where space is limited. The following sections provide Design Guidelines, Minimum Design Requirements, Maintenance Guidelines and a Worksheet for quantifying BMP performance to comply with the Chicago Stormwater Management Ordinance.

Design Guidelines

Swale systems are designed to convey and infiltrate stormwater runoff. Swale systems often include the following components:

- Inlet
- Pretreatment
- Excavated Channel
- Soil
- Check dams
- Gravel Storage Bed
- Vegetation
- Underdrain (Limited Application)
- Outlet

Inlet Runoff can enter the swale through a curb cut, weir, or other design. Runoff may flow off a curbless parking lot or road and to a swale slope in a diffuse manner using a vegetated filter strip. When concentrated flows enter the swale, energy dissipation and erosion control features must used.

Pretreatment Pretreatment is optional but can extend the life of the design. Vegetated filter strips can be used upstream for pretreatment. A sediment forebay may be constructed at the swale inlet, or the first swale segment and a check dam may be designed as a sediment forebay. The forebay protects the filtering and infiltration capacity of the swale.

Excavated Channel The channel itself provides the storage volume and conveyance capacity of the swale. Swale design balances needs for infiltration during small storms with needs for conveyance during large storms. Bottom widths between 2 and 8 feet work best to prevent formation of pilot channels. Side slopes of 3:1 are required, but 4:1 or flatter is recommended.

Soil The soil provides a growing medium for plants and allows for infiltration. The minimum design guidelines specify the use of soil that will promote infiltration and plant growth. The designer must ensure that the proposed soil will also be stable under larger storm events. In some cases, it may be necessary to design a conveyance channel using heavier soils and short grass that do not promote infiltration. In these cases, the drainage swale will not count as a volume control BMP.

Check Dams Ponding behind check dams creates storage, increases infiltration, increases travel time, reduces peaks, and helps prevent erosion by dissipating energy. Check dams should be provided at every 1-ft drop in elevation but should be at least 50 ft apart. Check dams increase infiltration by spreading water over the entire length of the swale.

Gravel Storage Bed Gravel may be incorporated below the swale bed to increase storage and promote infiltration. Gravel will perform this function most effectively when placed in ponded areas, provided runoff has received pretreatment. When a gravel storage bed is used, it must be separated from the prepared soils layer with a geotextile fabric.

Vegetation A dense cover of water-tolerant, erosion-resistant grass or other vegetation must be established. Considerations for vegetation include:

- Ability to form a dense sod with vigorous, upright growth (vegetation that mats down should not be considered)
- Resistance to periodic inundation and periodic drought
- Appropriateness for the soil type and the amount of light available
- Salt tolerance

Underdrain When minimum subsoil infiltration rates are not met, an underdrain system must be used. The underdrain system typically consists of a gravel layer that encases a perforated pipe running the length of the swale. Stormwater percolates through the soil and flows into the underdrain, which conveys treated stormwater to the downstream stormwater conveyance system.

Outlet A swale will have an outlet structure control to convey water to a sewer or receiving water. Outlet should be designed to accommodate the peak flow from the 100-year event.

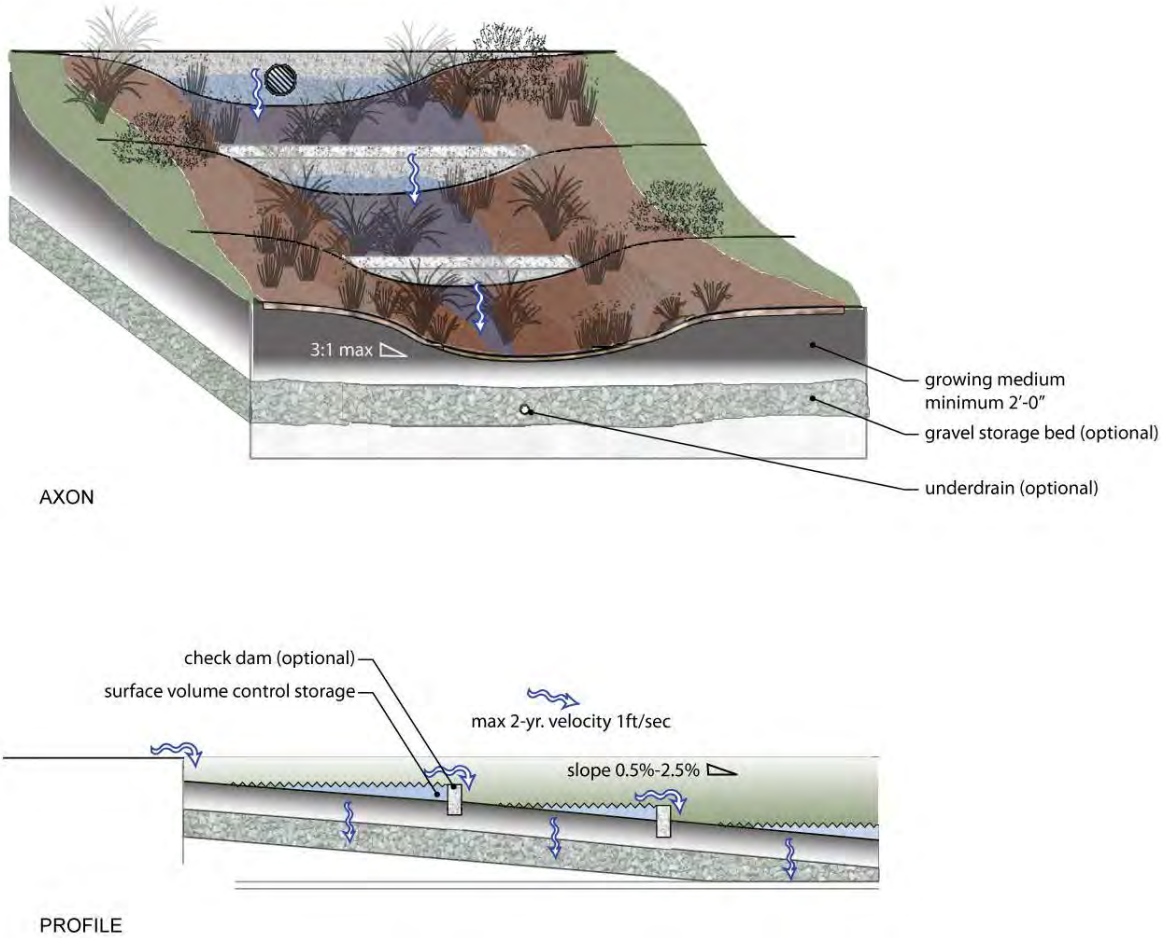

Figure 2: Typical Drainage Swale Configuration

Minimum Design Requirements
Velocities must be 1 ft/sec or less during the 2-year storm event.
Longitudinal slope must be between 0.5 and 2.5%
Utilize 3H:1V side slopes or flatter. Use slope protection when side slopes are steeper than 3H:1V.
Surface volume control storage must be provided behind check dams.
The growing medium soil must be a mix of 40% sand, 30% topsoil and 30% compost.. The growing medium soil must be at least 2 feet deep.
Soil borings or other data must verify that the depth to groundwater table is greater than 2 feet from the bottom of the BMP (lowest excavated elevation), or 3.5 feet when connected to a combined sewer system.
The underlying soil shall have a permeability of 0.5 in/hr or greater. If the underlying soils do not meet the permeability requirement, underdrains may be installed.

Maintenance Guidelines

Compared to other stormwater management measures, the required upkeep of swales is relatively low. The following schedule of inspection and maintenance activities is recommended:

Activity Schedule

As needed	• Mow and trim vegetation to ensure safety, aesthetics, proper swale operation, or to suppress weeds and invasive vegetation; mow only when swale is dry to avoid rutting. • Re-seed bare areas; install appropriate erosion control measures when native soil is exposed or erosion channels are forming. • Plant alternative grass species in the event of unsuccessful establishment. • Remove litter. • Clear obstructions and repair any channelization near check dams (if applicable)
Once per year	• Inspect and correct erosion problems, damage to vegetation, sediment and debris accumulation, and pools of standing water. • Inspect for uniformity in cross-section and longitudinal slope, correct as needed.

2.1.2 Drainage Swales

Section 1 Upstream Drainage Area				
1	Upstream impervious area including BMP area	A_t		square feet
2	Upstream weighted C-value (C-value=1.0 for bioinfiltration area for direct rainfall)	C		unitless
3	Volume of upstream runoff from a 1-inch storm = C * A_t * 1/12	$V_{upstream}$	0	cubic feet
4	Time of Concentration for upstream area (use TR-55 or DWM approved method)	T_c		minutes
5	2-year Rain Intensity based on T_c (see chart)	I		in/hr
6	2-Year Design Flow: Q = C*I*A_u/43560	Q_2		cfs
7	Describe upstream drainage area			

Section 2 BMP Feasibilty				
8	Design soil infiltration rate (must be 0.5 in/hr or greater unless underdrain system is used)	i		in/hr
9	Elevation of bottom of BMP (the infiltration surface)	$ELEV_{BMP}$		feet
10	Groundwater elevation	$ELEV_{GW}$		feet
11	Depth to seasonal groundwater (Must be 2 feet or greater, or 3.5 feet or greater if draining to combined sewer)	D_{GW}	0.0	feet

Section 3 BMP Specifications				
12	Dimensions of the drainage swale [length L, side slope SS, bottom width (BW), swale flowline Slope, Manning's n]	L		feet
		SS		ft/ft
		BW		feet
		Slope (0.5% to 2.5%)		%
		Manning n		unitless
13	Depth of Flow (must be 6 inches or less)	2-Year Depth of Flow		inches
14	Check to see if selected depth can pass 2-year flow (result must be greater than or equal to 2-year flow in line 8) Q = 1.49/n*A*(R^0.67)*(S/100)^0.5	Q_{swale}	#DIV/0!	cfs
15	Velocity at 6-inch depth of flow	Vel	#DIV/0!	ft/sec
16	Check dam height (max = 1 foot)	H_{dam}		ft
17	Check dam area = BW*H_{dam}+SS*H_{dam}^2	A_{dam}	0.00	square feet
18	Spacing of dams = H_{dam}/Slope	Spacing	#DIV/0!	ft/dam

19	Total number of check dams = L/Spacing (round down)	N_{dam}	#DIV/0!	dams
20	Check dam storage = N_{dam}*A_{dam}*Spacing/2	V_{dam}	#DIV/0!	cubic feet
21	Depth of prepared soil	D_{soil}		feet
22	Prepared soil porosity (0.25 maximum unless detailed materials report provided)	P_{soil}		unitless
23	Soil storage volume = L*BW*D_{soil}*P_{soil}	V_{soil}	0	cubic feet
24	Depth of underlying aggregate (optional, provision of aggregate only allowed when minimum infiltration feasibility requirements are met or when underdrains are provided)	D_{agg}		feet
25	Width of aggregate layer	W_{agg}		feet
26	Aggregate porosity (0.38 maximum unless detailed materials report provided)	P_{agg}		unitless
27	Aggregate storage volume = L*W_{agg}*D_{agg}*P_{agg}	V_{agg}	0	cubic feet

Section 4 BMP Performance				
28	Volume of upstream runoff (Line 4)	$V_{upstream}$	0	cubic feet
29	Check Dam Storage (Line 21)	V_{dam}	#DIV/0!	cubic feet
30	Soil Storage (Line 24)	V_{soil}	0	cubic feet
31	Aggregate Storage (Line 28)	V_{agg}	0	cubic feet
32	Storage Provided = V_{dam} + V_{soil} + V_{agg}	V_{BMP}	#DIV/0!	cubic feet
33	V_{total} (equals lesser of V_{BMP} or $V_{upstream}$)	V_{total}	0	cubic feet

GREEN ROOF GUIDESHEET

Overview

In green roof systems, runoff is absorbed and retained by living vegetation installed on a rooftop. There are two types of green roof systems: extensive and intensive systems. Extensive systems usually contain shallower soil, put less weight on rooftops, and are easy to maintain. They generally contain shorter plants with shallower root systems. Intensive systems have deeper soil; add more weight to a rooftop; and generally contain a more diverse mixture of deep-rooted plants, small trees, or shrubs. Intensive systems require more maintenance but provide added benefits in the form of water filtration and wildlife habitat. Green roof systems provide insulation and prolong the life of a roof by protecting it from the elements. Green roof systems also improve air quality by reducing the urban heat island effect. Maintenance of green roof systems is minimal and mostly involves watering and weed removal during the first few years of establishment. The following sections provide Design Guidelines, Minimum Design Requirements, Maintenance Guidelines and a Worksheet for quantifying BMP performance to comply with the Chicago Stormwater Management Ordinance.

Design Guidelines

There are rate control and volume control benefits of a green roof. A green roof will reduce the runoff coefficient for the project which will cause the required rate control volume to decrease. Also, a green roof can be counted as a pervious surface in order to reduce site imperviousness and help meet the volume control requirement..

A green roof system, extensive or intensive, is often comprised of the same components:

- Plant material
- Growing medium
- Filter fabric
- Drainage layer
- Membrane protection and root barrier
- Structural support

Plant Material The plant material chosen for green roofs is designed to take up much of the water that falls on the roof during a storm event. Plant selection is very important to the sustainability of the roof. About 50% of the vegetation on an extensive green roof should be sedums. Plant material also collects dust, creates oxygen, releases moisture, and provides evaporative cooling.

Growing Medium The growing medium is a critical element of stormwater storage and detention on a green roof, and provides a buffer between the roof structure and vegetation for root development. Storage is provided by a green roof primarily through water held in tension in the growing medium pores. The growing medium in an extensive green roof should be a lightweight mineral material with a minimum of organic material and should stand up to freeze/thaw cycles.

Filter Fabric An engineered filter fabric prevents fine soil particles from passing into the drainage layer of the green roof system.

Drainage Layer The drainage layer may be a lightweight granular medium that underlays the planting medium. The drainage layer needs to provide a balance between water retention and root aeration and is a critical component of the stormwater retention function.

Membrane Protection and Root Barrier To maintain structural integrity of the roof, a waterproof material is laid above the roof structure. Some waterproofing materials are inherently root resistant, whereas others require an additional root barrier.

Structural Support The load capacity of a roof structure must be taken into account when considering the installation of a green roof. Extensive green roofs typically weigh between 15 and 30 lbs per square foot and are compatible with wood or steel decks. Intensive green roofs weigh more than 36 lbs per square foot and typically require concrete supporting decks

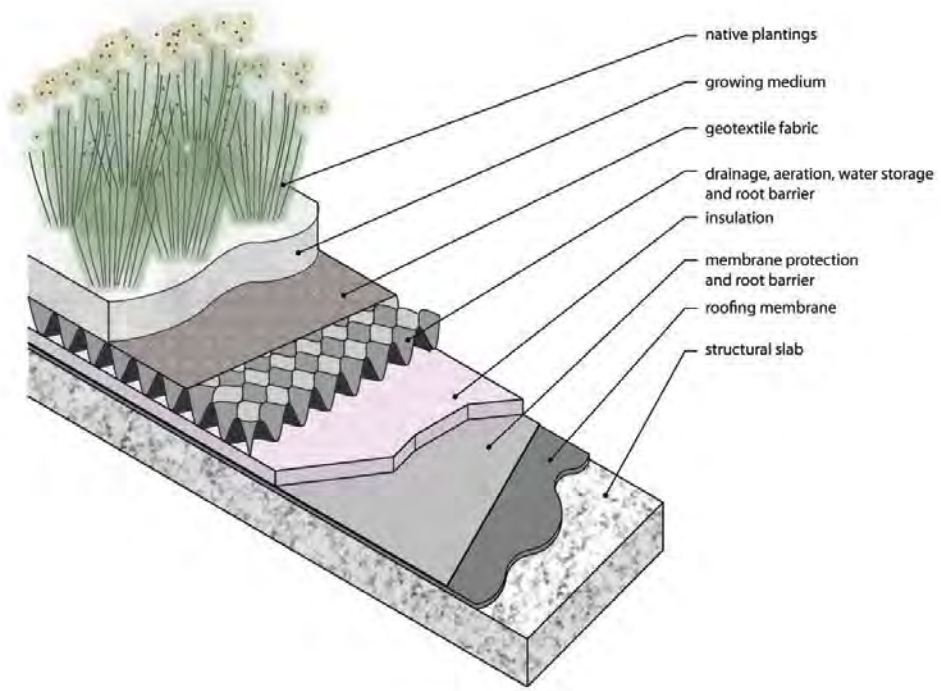

Figure 3: Structure of an extensive green roof

Minimum Design Requirements
A structural engineer or architect's seal must be included on the Plans to approve of load-bearing capacities of the proposed roofs.
The maximum permissible slope for extensive green roof systems shall be 25 percent.
The maximum permissible slope for intensive green roof systems shall be 10 percent.

Maintenance Guidelines

All facility components, including plant material, growing medium, filter fabric, drainage layer, waterproof membranes, and roof structure should be inspected for proper operations, integrity of the waterproofing, and structural stability throughout the life of the green roof. The manufacturer's maintenance schedule must also be followed and should be included with the stormwater management plan.

Activity Schedule

As needed
- Drain inlet pipe should be cleared when soil substrate, vegetation, debris or other materials clog the drain inlet.
- Sources of sediment and debris may be identified and corrected.
- Plant material should be maintained to provide 90% plant cover. Weeding should be manual with no herbicides or pesticides used. Weeds should be removed regularly and not allowed to accumulate.
- Irrigation, although not recommended, can be accomplished either through hand watering or automatic sprinkler systems if necessary during the establishment period.

Quarterly
- Growing medium should be inspected for evidence of erosion from wind or water. If erosion channels are evident, they can be stabilized with additional growth medium similar to the original material.

Once per year
- Inspect drain inlet pipe and containment system.

2.1.3 Green Roof

Section 1 BMP Specifications				
1	Dimensions of the green roof (length L, width W, substrate thickness T)	L		feet
		W		feet
		T		inches

Section 2 BMP Performance				
Volume control when green roof treated as a pervious surface				
2	Green roof counted toward pervious area	A_G	0.0	square feet

NATURAL LANDSCAPING AND STORMWATER TREES GUIDESHEET

Overview

Natural landscaping involves planting naturalized or native vegetation on permeable soils or prepared soils. Care must be taken to ensure that the proposed vegetation and existing soils are compatible. If existing soils are unsuitable for implementation of native vegetation, alternative landscaping plans should be devised, or a prepared soil should be brought onto the site. Natural landscaping on prepared soils has a greater capacity to infiltrate stormwater than lawns on heavy soil. As shown on the Rate Control Worksheet, areas with natural landscaping on permeable or prepared soils have a lower C-value and can reduce the amount of required detention storage. There is no volume control storage benefit specifically allowed for natural landscaping, however, natural landscaping can be an integral part of the design of other BMPs such as vegetated swales, filter strips and bioinfiltration basins.

Trees can also be used for minor volume control benefits and to reduce urban heat island effects. Trees slow down rain from small storms, holding the water on leaves and branches and allowing the water to evaporate. Urban heat island effects are reduced because trees provide shade to impervious surfaces, thereby decreasing the temperature of the surfaces and subsequently the temperature of the surrounding air and of any stormwater that passes over the impervious area. Lowering the temperature of stormwater runoff can be beneficial in improving the water quality of receiving streams. Existing trees located on the development site that are preserved as part of the site plan and proposed trees located on the development site that are planted within 20 feet of on-site impervious areas may count as a deduction of the on-site impervious area for volume control calculations (Figure 4). The tree species must be chosen from the approved list provided by the CDOE. New trees planted must be planted within 20 feet of ground level impervious surfaces. New trees must be at least 2-inch caliper at 4.5 feet above ground level to be eligible for the reduction. A 50-sq.ft. reduction is permitted for each new tree. Only 50% of the canopy area of an existing tree of at least 4-inch caliper, within 20 ft of ground level imperviousness, may be credited towards a reduction in impervious area.

Minimum design requirements for natural landscaping and stormwater trees are provided below. A worksheet for quantifying BMP performance to comply with the Chicago Stormwater Management Ordinance follows.

Minimum Design Requirements
Areas of natural landscaping shall be planted with deep-rooted vegetation.
The soil must consist of sandy loam, loamy sand, a loam with clay content less than 25% and sand content greater than 50%, or a prepared growing medium soil with a mix of 40% sand, 30% topsoil and 30% compost.
New trees must be planted within 20 feet of an on-site impervious surface to count as a volume control BMP. They must also be at least 2 inches in diameter at 4.5 feet above ground level.

Maintenance Guidelines

No special maintenance is required for natural landscaping or stormwater trees other than pruning and trimming in late fall or winter to remove dead wood and excess growth to maintain an open and healthy canopy. Native landscaping planting may be managed similar to the recommendations for bioinfiltration facilities. Trees counted as a stormwater management BMP that do not survive should be replaced.

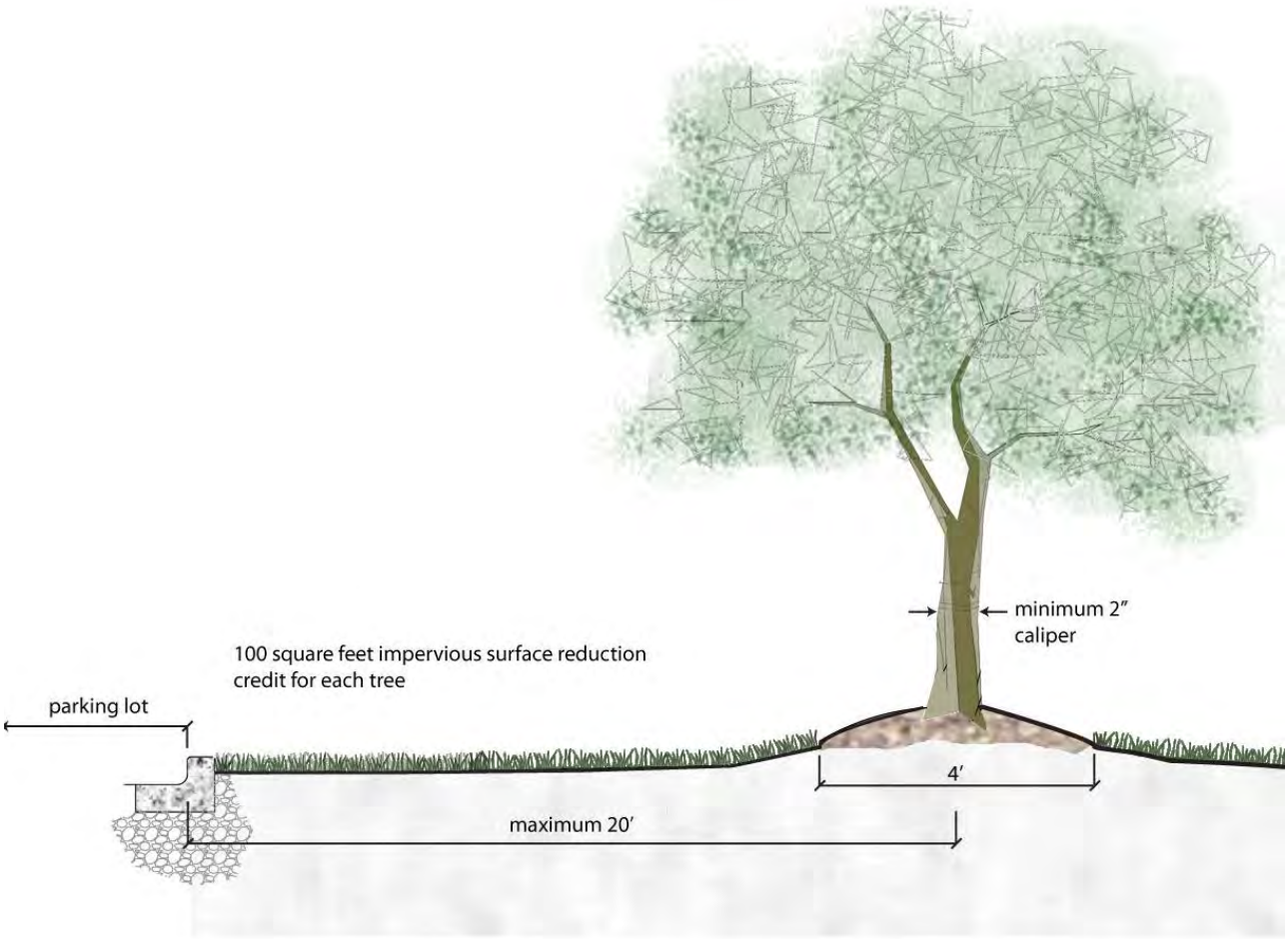

Figure 4: Stormwater Tree

2.1.5 Stormwater Trees

Section 1 Impervious Areas and Trees							
1	List impervious surfaces that will be effectively reduced by implementation or preservation of trees	Area (sf)	Number of new trees within 20 feet	Number of existing Trees within 20 feet	Total canopy size of existing trees	Area of Trees (New trees * 50 sf + existing tree canopy *0.5)	Effective Impervious Area for Volume Control = (Area - Trees Area)
	Gravel					0	0
	Pavement					0	0
	Ponds or wet bottom basins to HWL					0	0

Section 2 Detailed Tree Listing				
2	List trees and attach plan showing location and sizes of all proposed trees (Attach additional sheets if necessary)	Species	Caliper at 4.5 feet (must be >2 inch)	50% Canopy size (use 50 sq. ft. max)
3	List trees and attach plan showing location and sizes of all trees to be preserved (Attach additional sheets if necessary)	Species	Caliper at 4.5 feet (must be >4 inch)	Existing Canopy (sf)

PERMEABLE PAVEMENT GUIDESHEET

Overview

Permeable paving provides many benefits in urban environments by reducing the quantity of stormwater runoff and pollutants discharged from a site. Permeable pavement systems come in many different forms. The most common form is paver blocks with a cutout to facilitate infiltration. Permeable pavements work best on areas that have sandy, permeable soils, however, they may also be implemented on low permeability soils by using an underdrain system. The following sections provide Design Guidelines, Minimum Design Requirements, Maintenance Guidelines and a Worksheet for quantifying BMP performance to comply with the Chicago Stormwater Management Ordinance.

Design Guidelines

In order to meet the requirements of the Ordinance, areas of permeable pavement may be counted as a permeable surface or as a storage device. When counted as a permeable surface (answer yes to question 3 on the "2.0 Volume Control Worksheet" and complete entries on "1.2 BMPs-Rate Control Credit"), the facility is taken into account on the Rate Control Worksheet by adjusting the C-value and the storage is not credited toward volume control or detention storage. When treated as a storage device (answer no to question 3 on the "2.0 Volume Control Worksheet" and complete entries on "1.2 BMPs-Rate Control Credit"), the storage provided in permeable paving systems is based on the void space of the storage aggregate and may be counted toward the required volume control storage and detention storage. Figure 5 shows the typical components of a permeable pavement system.

Permeable pavements work by infiltrating runoff through a permeable surface into the gravel base below. Water is stored in the gravel subbase until it is exfiltrated into the underlying soil or carried away by an underdrain. The gravel base and subbase material must be sized for the expected traffic loading and for the desired amount of storage. The infiltration rate of the underlying native soils should be determined as explained in the Stormwater Management Manual. Based on design infiltration rate, the depth of the storage layer should be sized to drain by exfiltration within 48 hours. For instance, a site with a measured infiltration rate of 0.5 in/hr would have an allowable storage layer depth of 24 inches (0.5 in/hr * 48 hours). If additional storage was desired (such as in a combined volume control and rate control storage facility), an underdrain or outlet structure could be placed above the elevation at which the volume control storage is provided. If the measured soil infiltration rate does not meet the minimum requirement of 0.5 in/hr, then the underdrain could be placed at the bottom of the storage aggregate.

Finally, when computing the storage provided in a permeable pavement system, the slope of the pavement surface must be taken into consideration. No storage may be counted in aggregate that is located higher than the minimum pavement surface elevation. When large or linear permeable pavement areas are designed this becomes an important design consideration. If adjustments to the functional storage are needed, the "effective" depth of storage should be computed by the designer and then entered into Line 11 on the Permeable Pavement Worksheet.

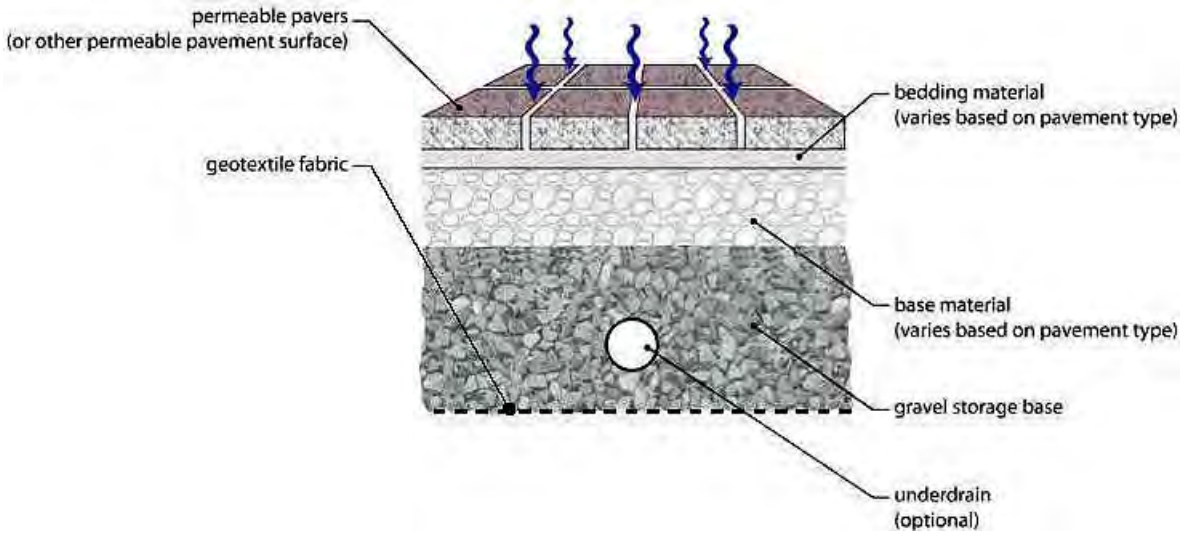

Figure 5: Permeable Pavement

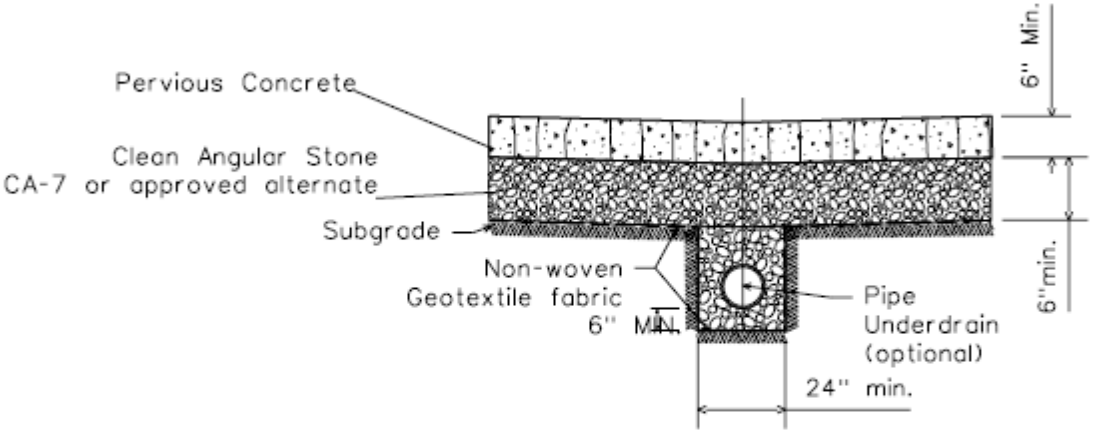

Figure 6. Pervious Concrete

Note: Concrete and Aggregate base depths must be designed based on average daily traffic and/or vehicle structural loads.

Minimum Design Requirements
Subsoils must have at least a 0.5 in/hr infiltration rate or greater. Otherwise, an underdrain system must be used if soil infiltration rates do not meet this requirement.
The bottom of the aggregate shall be at least 2 feet above the groundwater table or bedrock, 3.5 feet if discharging to a combined sewer.
Compaction of the soils underlying the permeable pavement system must be avoided during construction.
Permeable pavement or infiltration systems must be situated at least 10 feet downgradient (10 feet laterally, with flow away from building) from buildings that are not waterproofed against basement seepage, otherwise submit affidavit in Appendix II-B of the Regulations.
Minimum and maximum slopes on permeable paving shall be 0.5 percent and 5 percent, respectively.
All aggregate material shall be crushed angular stone and free of fines.
When using an underdrain system, the water level within the underlying stone base may not rise to within 8 inches of the permeable pavement surface for a 10 year storm event.
The underlying stone base must be designed to drain within 48 hours of a storm event.
When using an underdrain system, any impermeable subsoil material must be graded with a minimum 1 percent slope to such system, and the top 3 inches of impermeable soil must be mixed with at least 3 inches of sand.
For pervious concrete, signage must be placed on the property that states, “This surface is pervious concrete pavement. No sealcoat or overlay material is to be used on this pavement. Call XXX-XXXX before treating this pavement with any material.” Insert the number of the property management company.
When an area of conventional impervious pavement drains toward permeable pavement, a maximum ratio of 3:1 impervious to permeable is allowed.

Maintenance Guidelines

As with most stormwater management practices, permeable pavement systems require regular maintenance to ensure a prolonged lifespan. The following table displays maintenance recommendations for permeable pavement systems.

Activity Schedule for Permeable Pavers	
As needed	• Do not use sand during the winter months • Keep landscaped areas well-maintained and prevent soil from being transported onto the pavement. • Monitor regularly to ensure that the paving surface drains properly after storms. • Ensure that surface is free of sediment. • Remove vegetation established in gravel spaces in pavement
Twice per year	• Broom, blow, rotary brush or sweep entire surface (alternate – vacuum entire surface) • Replenish joint aggregate material after cleaning. • Clean out inlet structures within or draining to the subsurface bedding beneath surface
Once per year	• Inspect surface for signs of deterioration or settling.
Every 5 years	Vacuum or powerwash the entire surface and refill joint aggregate material

Activity Schedule for Pervious Concrete	
As needed	• Do not use sand during the winter months • Keep landscaped areas well-maintained and prevent soil from being transported onto the pavement. • Monitor regularly to ensure that the paving surface drains properly after storms. • Ensure that surface is free of sediment.
Twice per year	• Vacuum, pressure wash, or power blow entire surface • Clean out inlet structures within or draining to the subsurface bedding beneath surface

2.1.6 Permeable Pavement

Section 1 Upstream Drainage Area				
1	Upstream impervious area including area of permeable pavement	A_i		square feet
2	Upstream weighted C-value (C-value=0.95 for permeable pavement areas for nearly direct rainfall)	C	0.95	unitless
3	Volume of upstream runoff from a 1-inch storm = C * A_i * 1/12	$V_{upstream}$	0	cubic feet
4	Describe intended function of system (Is it standalone system designed for infiltration, is integrated as part of the detention storage, is it underdrained to downstream system, will it receive upstream runoff?)			

Section 2 BMP Feasibilty				
5	Design soil infiltration rate (must be 0.5 in/hr or greater unless underdrain system is used)	i		in/hr
6	Allowable depth of storage aggregate without provision of underdrain (=i/ 12 inches/ft * 48 hours)	D_{allow}	0.00	feet
7	Elevation of bottom of BMP (the infiltration surface)	$ELEV_{BMP}$		feet
8	Groundwater elevation	$ELEV_{GW}$		feet
9	Depth to seasonal groundwater (Must be 2 feet or greater, or 3.5 feet or greater if draining to combined sewer)	D_{GW}	0.0	feet

Section 3 BMP Specifications				
10	Dimensions of the permeable pavement (length, width, or area)	L		feet
		W		feet
		A_{BMP}	0	square feet
11	Depth of underlying aggregate (must be less than D_{allow})	D_1		feet
12	Aggregate porosity (0.38 maximum unless detailed materials report provided)	P_1		feet
13	Volume of Aggregate storage applicable to volume control = A_{BMP} * D_1*P_1	V_{BMP}	0	cubic feet

Section 4 BMP Performance				
14	Volume of upstream runoff (Line 4)	$V_{upstream}$	0	cubic feet
15	Volume Control Storage Provided = V_{BMP}	V_{BMP}	0	cubic feet
16	V_{total} (equals lesser of V_{BMP} or $V_{upstream}$)	V_{total}	0	cubic feet

ROOF RUNOFF BMPs GUIDESHEET

Overview

Roof runoff BMPs include planter boxes, rain barrels, and cisterns. Planter boxes are used in heavily paved areas to reduce the area of impervious areas. Planter boxes can be aboveground or at grade and are designed to retain water in the substrate or in an underlying aggregate. Planter boxes come in a wide variety of shapes and sizes and may be planted with native or ornamental plants. Planter boxes at grade can be designed to drain part of the surrounding paved area. Planter boxes can also be designed to infiltrate water into the ground or to capture water through an underdrain system that discharges excess water into a sewer system. The storage provided in the voids of underlying aggregate, prepared soil voids, and the contained air space (reservoir) above the soil may be counted as volume control storage.

Rain barrels and cisterns collect and store stormwater runoff from rooftops. The volume of rain barrels or cisterns may be counted as volume control storage and detention storage (up to a maximum of 10% of the total required detention storage) when minimum design guidelines are met. Water collected in rain barrels and cisterns can be used to water lawns and landscaped areas between storms. Rain barrels and cisterns are therefore most useful during the growing season. They require periodic cleaning to remove debris. Filters to keep out most debris can be installed, but periodic cleaning is still advised. In addition, rain barrels should be sealed to prevent mosquito breeding and must be drained before winter to prevent any damage from freezing and thawing.

The following sections provide Design Guidelines, Minimum Design Requirements, Maintenance Guidelines and a Worksheet for quantifying BMP performance in relationship to the Chicago Stormwater Management Ordinance.

Design Guidelines

Rain Barrels and Cisterns

Rain barrels and cisterns all require the following basic components:

- Roof leader or other means of conveying roof runoff to the storage element
- Screen to prevent debris and mosquitoes from entering
- Storage element
- Slow release mechanism or pump
- Reuse opportunity or infiltration area
- Overflow mechanism to bypass large storms

Roof Leader The gutter and roof leader system collects rooftop runoff and conveys it to the rain barrel, cistern, or other storage element. In most cases conventional roof leaders and downspouts can be used for this purpose.

Screen A screen keeps leaves and other debris from entering and clogging the storage element. A screen also prevents mosquitoes from breeding in the rain barrel. A screen is typically placed at the end of the roof leader, before flow enters the rain barrel. A leaf strainer may also be placed where the gutter connects to the roof leader.

Storage Element The storage element is the barrel, cistern, or tank itself. Rain barrels are typically made of plastic. Underground cisterns may be poured concrete or prefabricated plastic tanks similar to septic tanks. Proprietary products that store water in a variety of structures are also available. Some of these are designed to bear the weight of vehicles.

Slow Release Mechanism or Pump For the storage element to serve its stormwater control function, it must be completely drained within 14 days after a storm event. Larger surface tanks may drain by gravity or may be pumped. Operational experience has suggested that the best method for using water in large storage features like a cistern is to bring it to pressure and distribute it though an irrigation system. Other alternatives exist, but the plan should have a clear idea of how and where the water will be used if relying solely on gravity distribution.

Reuse Opportunity or Infiltration Area For rain barrels, cisterns, and other tanks to provide effective stormwater management, an opportunity for reuse or infiltration of the stormwater must exist. This opportunity might be provided by a garden or landscaped area that needs to be watered, or an opportunity to reuse stormwater for non-potable uses.

Overflow Mechanism The storage capacity of rain barrels, cisterns, and other tanks will be exceeded in large storms. The overflow can occur through a hose, weir, pipe, or other mechanism. The discharge from the overflow is directed to the same place flow from the roof leader would be directed if there were no rain barrel or cistern.

Planter Boxes

Planters are placed on impervious surfaces such as sidewalks and plazas. Contained planters should be treated as pervious surfaces and not as volume control BMPs because they are not designed to accept runoff from other surfaces. Drainage occurs through the bottom of a planter box onto the impervious surface.

The infiltration planter box is designed to intercept precipitation and accept runoff from downspouts. The box is designed to store water in planter soil and then allow the water to infiltrate into native soils; for this reason, the box must be positioned at least 10 feet from any buildings. An infiltration planter box reduces an amount of stormwater runoff equal to the available pore space in the soil, the size of the reservoir above the planter soil. If soil testing is conducted, infiltration can be used in addition to the detention release rate when sizing detention storage.

The flow-through planter box includes aspects of all three types pf planter boxes (Figure 7) has an impervious bottom and is designed to accept both precipitation and downspout runoff. The box is designed to store water in planter soil and overflow excess water to a storm sewer system. This type of planter box is preferred for use adjacent to buildings. Flow-through planter boxes reduce an amount of stormwater runoff equal to the available pore space in the planter soil and the size of the reservoir above the soil.

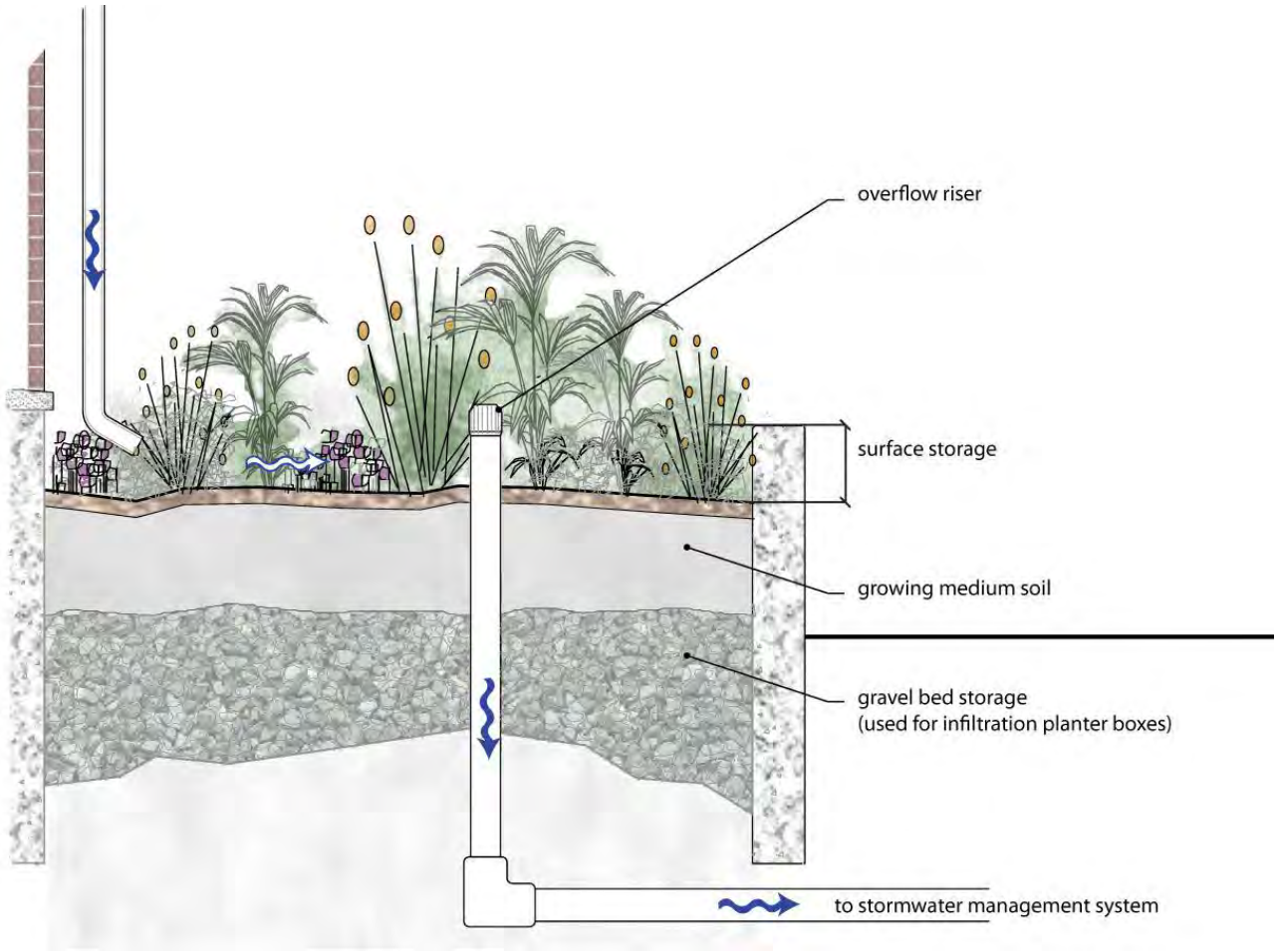

Figure 7: Flow-through Planter Box (Adapted from City of Portland, 2002)

Minimum Design Requirements
If a rain barrel or above ground cistern will hold more than a 6-inch depth of water below the drain, it must be securely covered to prevent small children from gaining access to the standing water and to prevent mosquitoes from breeding.
Above ground cisterns with a capacity of more than 55 gallons must be designed with proper structural foundations.
Rain barrels and cisterns must include inlet screens to minimize the number of foreign objects entering the vessels.
Excess water entering the rain barrel or cistern must be designed to overflow to a treatment train or stormwater conveyance system.
The system must have a convenient and functional means of water withdrawal.
The system, if applicable to stormwater detention, will receive credit for up to 10 percent of the required site storage and must be drained within 14 days of a storm event.

Maintenance Guidelines

As with other best management practices, these stormwater storage systems require regular maintenance to ensure a prolonged life. The following table suggests maintenance activities to perform on rain barrels, cisterns, and planter boxes.

Activity Schedule	
As needed	• Occasional cleaning may be necessary to remove debris, such as leaves, coming off the drainage area
2 weeks after every rainfall event	• Rain barrels and cisterns being used to provide rate control volume must be drained/pumped out.
Monthly	• Remove litter and debris • Clear leaves and debris from overflow pipe
Twice per year	• Inspect plants in planter boxes to evaluate health
Once per year	• Flush cisterns to remove sediment. • Brush the inside surfaces and thoroughly disinfect. • To avoid structural damage, the rain barrel should be drained prior to freezing weather.

2.1.7 Roof Runoff BMPs - Planter Boxes

Section 1 Upstream Drainage Area				
1	Upstream impervious area including BMP area	A_t		square feet
2	Upstream weighted C-value (C-value=1.0 for bioinfiltration area for direct rainfall)	C		unitless
3	Volume of upstream runoff from a 1-inch storm = C * A_t * 1/12	$V_{upstream}$	0	cubic feet
4	Describe system (Will planter box include aggregate, does it drain to underlying soils, is it underdrained to the stormater management system)			

Section 2 BMP Feasibilty				
5	Design soil infiltration rate (must be 0.5 in/hr or greater if planter box is to drain to subsoil)	i		in/hr
6	Elevation of bottom of BMP (the infiltration surface)	$ELEV_{BMP}$		feet
7	Groundwater elevation	$ELEV_{GW}$		feet
8	Depth to seasonal groundwater (Must be 2 feet or greater, or 3.5 feet or greater if draining to combined sewer)	D_{GW}	0.0	feet

Section 3 BMP Specifications				
9	Dimensions of the planter box (length, width, or area)	L		feet
		W		feet
		A_{BMP}	0.0	square feet
10	Depth of surface storage	D_1		
11	Depth of prepared soil	D_2		feet
12	Prepared soil porosity (0.25 maximum unless detailed materials report provided)	P_2		feet
13	Depth of underlying aggregate (optional)	D_3		feet
14	Aggregate porosity (0.38 maximum unless detailed materials report provided)	P_3		feet
15	Air space storage volume (A_{BMP} * D_1)	V_{AIR}	0	cubic feet
16	Planter box soil media storage volume = A_{BMP} * [(D_2 * P_2) + (D_3 * P_3)]	V_{SOIL}	0	cubic feet

Section 4 BMP Performance				
17	Volume of upstream runoff (Line 4)	$V_{upstream}$	0	cubic feet
18	Storage Provided = V_{AIR} + V_{SOIL}	V_{BMP}	0	cubic feet
19	V_{total} (equals lesser of V_{BMP} or $V_{upstream}$)	V_{total}	0	cubic feet

VEGETATED FILTER STRIPS GUIDESHEET

Overview

Filter strips are uniformly graded and densely vegetated sections of land, engineered to filter and infiltrate water. Filter strips should be implemented in areas with little or no slope to provide the maximum impact by slowing and infiltrating runoff and allowing pollutants and sediment to deposit or be filtered out. When implemented on permeable or prepared soils, filter strips can effectively reduce runoff volume for small storm events, especially when they receive runoff from areas no more than four or five times their size. The following sections provide Design Guidelines, Minimum Design Requirements, Maintenance Guidelines and a Worksheet for quantifying BMP performance to comply with the Chicago Stormwater Management Ordinance.

Design Guidelines

Filter strips are designed to receive stormwater runoff from impervious surfaces and disperse it over wide, vegetated areas. If designed according to the minimum design guidelines, volume control storage credit is given for a 1 to 1 ratio of impervious area to the area the filter strip. For example, if one acre of parking lot was discharged to a ¼-acre filter strip designed in accordance with the minimum design requirements, volume control would be satisfied for ¼ acre of impervious surface. Additional measures would be needed for the remaining ¾ acre of parking lot. Figure 8 depicts the minimum design requirements for filter strips.

Level spreaders should be used to disperse runoff to the filter strip and avoid channelization. Concentrated flow rates can have an erosive effect that can damage the filter strip, rendering the strip ineffective. A level spreader intercepts concentrated flows and disperses runoff in a uniform manner to the filter strip. It may consist of a gravel-filled trench running perpendicular to the direction of concentrated flow. Curb cuts combined with a gravel level spreader are a common type of flow control. Water fills the gravel trench, spreading evenly along the trench's axis before overflowing on the downstream side. A concrete curb or other fixed edge must be provided on the downstream side of the gravel to ensure that flow remains level. Level spreaders improve the effectiveness of the filter strip or other BMPs that depend on sheet flow to operate. Level spreaders can be used at the edges of parking lots, loading areas, driveways, roof downspouts, and other discharge points when a point source discharge should be spread over a larger level area. When receiving downspout flows, a level spreader must be sufficiently wide and deep in order to distribute runoff across the width of the level spreader. Level spreaders are inexpensive and require very little maintenance, however, it is critical that a level spreader is constructed level, or else it is rendered useless.

The vegetation for filter strips may be comprised of turf grasses, meadow grasses, shrubs, and native vegetation.

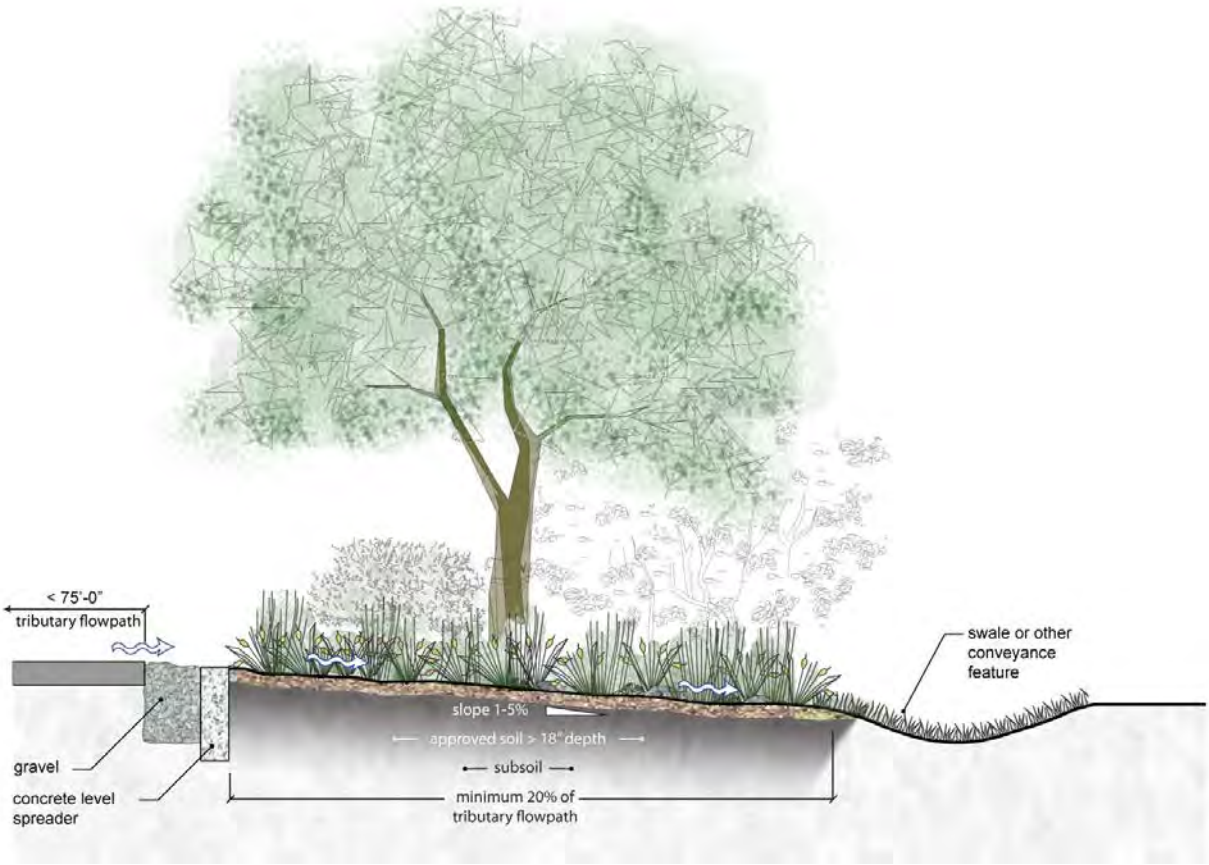

Figure 8: Filter Strip

Minimum design requirements for vegetated filter strips are provided below. A worksheet for quantifying BMP performance in relationship to the Chicago Stormwater Management Ordinance follows.

Minimum Design Requirements
The entire filter strip area shall be more than 2 feet above the groundwater table.
Filter strips must have longitudinal slopes of 1 to 5 percent (2 percent optimum) in the direction of flow.
The longest flow path of the contributing drainage areas must not exceed 75 feet.
A level spreader is required whenever the tributary area is not uniformly sloped toward the filter strip.
When filter strips are used to accept roof runoff for the purposes of volume control, a level spreader must be utilized. The hydraulic loading rate may not exceed 75 feet of roof per one foot of filter strip width.
The soil must consist of sandy loam, loamy sand, a loam with clay content less than 25% and sand content greater than 50%, or a prepared growing medium soil with a mix of 40% sand, 30% topsoil and 30% compost. The approved soil type must be at least 18 inches deep.
The slope upgradient of a level spreader must be less than 1 percent for at least 20 ft while the slope downgradient must be less than 6 percent.
The length and depth of the level spreader must be at least 6 inches.

Minimum Design Requirements
Level spreader must be absolutely level along its width.

Maintenance Guidelines

Maintenance requirements for filter strips are relatively simple. Normal maintenance requires occasional mowing or weed removal and periodic cleaning. Filter strips can decrease maintenance requirements of downstream stormwater devices by capturing and controlling sediment.

Activity Schedule

As needed	• Mowing and/or trimming of vegetation.
Monthly	• Inspect all vegetated strip components expected to receive and/or trap debris and sediment for clogging and excessive debris and sediment accumulation; remove sediment during dry periods.
Twice per year	• Vegetated areas should be inspected for erosion, scour, and unwanted growth. Erosion repair and removal of unwanted growth should have minimum disruption to the planting soil bed and remaining vegetation.
Once per year	• Inspect all level spreading devices for trapped sediment and flow spreading abilities. • Remove sediment and correct grading and flow channels during dry periods.

2.1.8 Filter Strips Worksheet

Section 1 Upstream Drainage Area				
1	Upstream impervious area	A_i		square feet
2	Volume of upstream impervious area runoff from a 1-inch storm = 0.95 * A_i * 1/12	$V_{upstream}$	0	cubic feet
3	Describe upstream drainage area			

Section 2 BMP Feasibilty				
4	Elevation of filter strip surface	$ELEV_{BMP}$		feet
5	Groundwater elevation	$ELEV_{GW}$		feet
6	Depth to seasonal groundwater (Must be 2 feet or greater, or 3.5 feet or greater if draining to combined sewer)	D_{GW}	0.0	feet

Section 3 BMP Specifications				
7	Dimensions of the filter strip [length L (length parallel to flow must be 20% or greater than the DA flowpath), width W, slope]	L		feet
		W		feet
		Slope (1% to 5%)		%
8	Check effective tributary flow length (must be less than 75 feet and level spreader required if not a uniformly sloping surface) Effective flow path of drainage area = A_i/W	DA Flowpath	#DIV/0!	feet
9	If minimum design requirements are met, compute minimum impervious area for which swale serves as volume control. Impervious Area controlled = Filter strip area (L * W)	Impervious Area Controlled	0	square feet

Section 4 BMP Performance				
10	Volume of upstream impervious area runoff (Line 2)	$V_{upstream}$	0	cubic feet
11	Equivalent Volume Control Storage (V = Area Controlled * 0.5 / 12)	V_{BMP}	0	cubic feet
12	V_{total} (equals lesser of V_{BMP} or $V_{upstream}$)	V_{total}	0	cubic feet

DETENTION SYSTEMS GUIDESHEET

Overview

There are various ways to store water on-site. Detention systems include: detention basins, detention vaults, infiltration vaults, oversized pipes, parking lot detention, and rooftop detention.

Detention Basins

Detention basins are depressions that temporarily store stormwater and release it gradually to a downstream drainage system. Wet detention basins are designed to permanently retain water and can be made to appear manicured or naturalized. Dry detention basins are designed to drain completely between storms. When discharging to waterways or storm sewers, wet detention basins are preferable to dry detention basins because of their effectiveness in removing runoff pollutant loads, especially suspended solids. In order to achieve optimum pollutant removal efficiency, the basin inlet and outlets should be located hydraulically as far apart as possible to prevent “short circuiting” and to increase the retention time. In addition to providing pollutant removal, detention basins can be designed to be aesthetically pleasing and to provide recreational benefits.

Naturalized detention basins incorporate features such as plunge pools, stilling basins, variable topography to lengthen low flow pathways, and native upland buffer and wetland plantings. Detention basins that incorporate these features can replicate some of the flood storage, water quality and habitat benefits provided by natural systems such as wetlands, lakes or ponds. Naturalized detention basins may be created on almost any site, but the provision of wetlands may be constrained by site hydrology and soil conditions. Wetland detention basins are feasible in areas with a high water table or relatively impermeable soils. In some cases, it may be possible to provide detention within an existing degraded wetland area by developing a plan to rehabilitate the area. In addition to reducing peak flows, wetland detention basins are very effective in removing pollutant loads. The principal advantages of stormwater wetlands are their ability to prevent settled pollutants from resuspending and washing out during subsequent storms and their ability to remove dissolved pollutants and organic matter through biological processes. High-quality wetlands should not be used to treat stormwater.

Detention Vaults

Detention vaults are usually precast reinforced concrete tanks constructed below grade. They are provided with restrictors to limit release rates. Most vaults permanently retain water in order to dissipate energy, settle out large solids particles, and act as an oil separator. Subsurface vault systems are suitable for any project where space is limited and other stormwater management systems are not feasible. Subsurface vaults may be used for commercial, industrial, or roadway projects. The presence of a subsurface vault in most cases does not alter the intended land use at the surface. The subsurface vault must meet structural requirements for overburden support and traffic loading to be applicable in urban settings.

Infiltration Vaults

Infiltration vaults are detention vaults with an open bottom to encourage infiltration in areas where permeable subsoil conditions are found (Figure 9). This option may be used to satisfy volume control requirements but above-ground naturalized infiltration facilities are preferred. Infiltration vaults must include a design for pretreatment. In many cases this can be provided within the vault itself, but a

definitive long-term maintenance plan will be required for the removal of sediment. When the infiltration rate has been verified by geotechnical investigations and pretreatment is provided, the infiltration rate may be counted in addition to the allowable release rate when computing required storage volumes.

Oversized Pipes

Oversized pipes are designed like storm sewers. Oversized pipes serve as both detention and conveyance structures. They are very commonly used at small developments to fulfill detention requirements. To serve as a storage structure, the oversized pipe requires a flow restrictor at the downstream end of the pipe to limit the capacity of the sewer outlet to the required release rate. In this way, when inflow into the sewer is greater than the release rate, stormwater is “stored” in the pipe behind the restrictor. Oversized pipes offer a feasible alternative to detention basins when a site has limited space; however, oversized pipes do not provide volume control or water quality benefits.

Parking Lot Detention

Parking lots can be significant sources of runoff pollutants and these areas are often directly connected to the storm drain system. Reducing the paved surface area in parking lots and incorporating BMPs into the parking lot design can reduce runoff volume and pollutants discharges from the site. Parking lot detention can be designed to receive overflow from other BMPs during intense storms or to pond to a certain depth and then overflow into other BMPs. City regulations allow up to 12 inches (10 inches recommended) of water to be ponded directly on the parking lot surface.

Rooftop Detention

Rooftop detention consists of either an enclosed chamber or a constructed ponding area designed to fill with stormwater during large storm events, slowly releasing it over a number of hours. There are numerous components to these systems. Drain inlet pipes convey stormwater into a detention chamber, which accumulates stormwater during a storm event. An orifice structure or outlet drainpipe restricts the flow out of the detention chamber, allowing it to fill up and slowly drain out. Rooftop detention does not provide water quality or volume control benefits.

Minimum design requirements for detention systems are provided below. A worksheet for quantifying infiltration vault performance to comply with the volume control requirements of the Chicago Stormwater Management Ordinance follows.

Minimum Design Requirements
Detention Basins
If the outlet from a dry bottom basin is less than 2 feet above of the crown of the combined outlet sewer, a check valve must be installed to prevent combined sewerage from backing up into the basin.
Dry bottom basins must be capable of draining within 72 hours of a storm event.
Maintenance access to the facility must be provided.
The bottom of the storage area in a detention basin must be above the seasonally high groundwater table.
For wet detention basins*, a safety ledge at least 4 feet in width must be constructed at a depth of 1 to 2 feet below the normal water surface.
Wet detention basins without vegetation shall be at least 3 feet deep. The side slopes shall be no steeper than 3H:1V without erosion protection. The sides of the pond that extend below the safety and aquatic benches to the bottom of the pond must have a slope that will remain stable, and be no

Minimum Design Requirements
steeper than 2H:1V. For dry bottom detention basins, side slopes shall be 4H:1V or flatter.
A sediment forebay shall be incorporated into all wet bottom detention basins.
After excavation and grading of a stormwater wetland basin, at least 6 inches of topsoil must be applied to the basin bottom and sideslopes. Reference Stormwater Manual.
At sites where infiltration is too rapid to sustain permanent soil saturation, analysis of the proposed plantings or intended wetland functions must be undertaken. If needed, an impermeable liner (geotextile fabric) shall be designed to maintain adequate hydrology. Where the potential for groundwater contamination is high, such as runoff from sites with a high potential pollutant load, the use of a liner is required.
Basins incorporating wetlands shall include a buffer to separate the wetland from surrounding land where feasible.
Detention Vaults
Detention vaults under buildings designed only for a 10-year storm capacity, shall be provided with means to safely accommodate 100-year overflows.
Buildings with underground storage must have plans (with backup calculations) sealed by a licensed architect or structural engineer to safeguard against structural failure of floor foundations and downspouts due to maximum hydrostatic pressures during sewer surcharges.
Proper ventilation of underground vaults for buildings must be provided in accordance with Building Code Articles 9 and 11, as applicable, to equalize interior downspout pressures and to prevent siphoning effects through the piping and sewer systems.”
Vaults must be designed to be water-tight unless used for groundwater infiltration purposes or unless the bottom of the vault is at least 7 feet above the groundwater table.
For vaults using infiltration*, soil must have at least a 0.5 in/hr infiltration rate or greater and the bottom of the vault must be at least 3.5 feet above the groundwater table when connected to a combined sewer. Means to control sediment and/or debris from entering the vault must be provided. Pretreatment measures are required for all infiltration vaults.
If the outlet from a vault is lower than the crown of the combined outlet sewer, a check valve must be installed to prevent combined sewerage from backing up into the vault.
Oversized Pipes
Locking manhole covers shall be provided for pipe diameters 4 feet and larger in areas where children may be present.
If the outlet from a vault is lower than the crown of the combined outlet sewer, a check valve must be installed to prevent combined sewerage from backing up into the vault.
Parking Lot Detention
Maximum allowable ponding in a parking lot shall be 12 inches. If more than 10 inches of ponding, the O&M Plan must indicate such.
Adequate visible warning must be provided for any depressed islands during flood stage.
Rooftop Detention
Provide a grading plan of the roof to verify available storage.
Provide details and hydraulic characteristic of any controlled roof drains in the Plan
Provide scuppers or overflows to accommodate 100-year storm events.
Include approval and seal from a Registered Structural Engineer or Licensed Architect.
In addition to other applicable code requirements, Sections 18-29-1105, 1106, and 1110 of the Municipal Code must be complied with.
Restrictors
The maximum discharge released is equal to or less than the maximum permissible release rate for the site.
DWM 3-inch and 4-inch vortex restrictors utilize 8-inch diameter outlet pipes to achieve release rates of 0.15 and 0.25 cfs, respectively.
Flow-restricting outlets shall be submerged in a catch basin, i.e., with a half trap, to prevent clogging.
The minimum restrictor plate size is 2.5” in diameter.

Maintenance Guidelines

Maintenance is required for the proper operation of detention systems. Plans for detention systems should identify owners, parties responsible for maintenance, and an inspection and maintenance schedule for detention systems.

Activity Schedule (Detention Basins)

As needed	• Sediment should be removed from the basin as needed (at least once every 5 to 10 years)
Quarterly	• Inspect inlet pipe(s) and outlet control structure for clogging • After every storm greater than one inch • Remove trash and debris • Remove invasive plants • Grassed areas also require periodic prudent fertilizing, dethatching and soil conditioning • Trees, shrubs, and other vegetative cover will require periodic maintenance such as fertilizing, pruning, and pest control • Mow / trim detention basin vegetation
Once per year	• Inspect detention basin, potential problems include: subsidence, erosion, cracking or tree growth on the embankment; damage to the emergency spillway; sediment accumulation around the outlet; inadequacy of the inlet/outlet channel erosion control measures; changes in the condition of the pilot channel; and erosion within the basin and banks.

Activity Schedule (Underground detention systems)

Underground vaults must be designed so that the vault can have easy access for inspection and maintenance. Vault maintenance procedures must meet OSHA confined space entry requirements, which include clearly marking entrances to confined space areas. This may be accomplished by hanging a removable sign in the access riser(s), just under the access lid.

As needed	• Removal of sediment and debris from subsurface vault sedimentation chamber when the sediment zone is full as well as from inlet and outlet pipes. Sediments should be tested for toxicants in compliance with applicable disposal requirements if land uses in the catchment include commercial or industrial zones, or if indications of pollution are noticed.
Quarterly	• Floating debris should be removed.
Once per year	• Inspection of subsurface vault and control structures

Activity Schedule (Parking lot detention and Rooftop detention)

As needed	• Remove trash and debris
Quarterly	• Inspect outlet control structure for clogging and after every

	storm greater than 1 inch
Once per year	• Inspect storage area to ensure that encroachments or renovations do not reduce available storage.

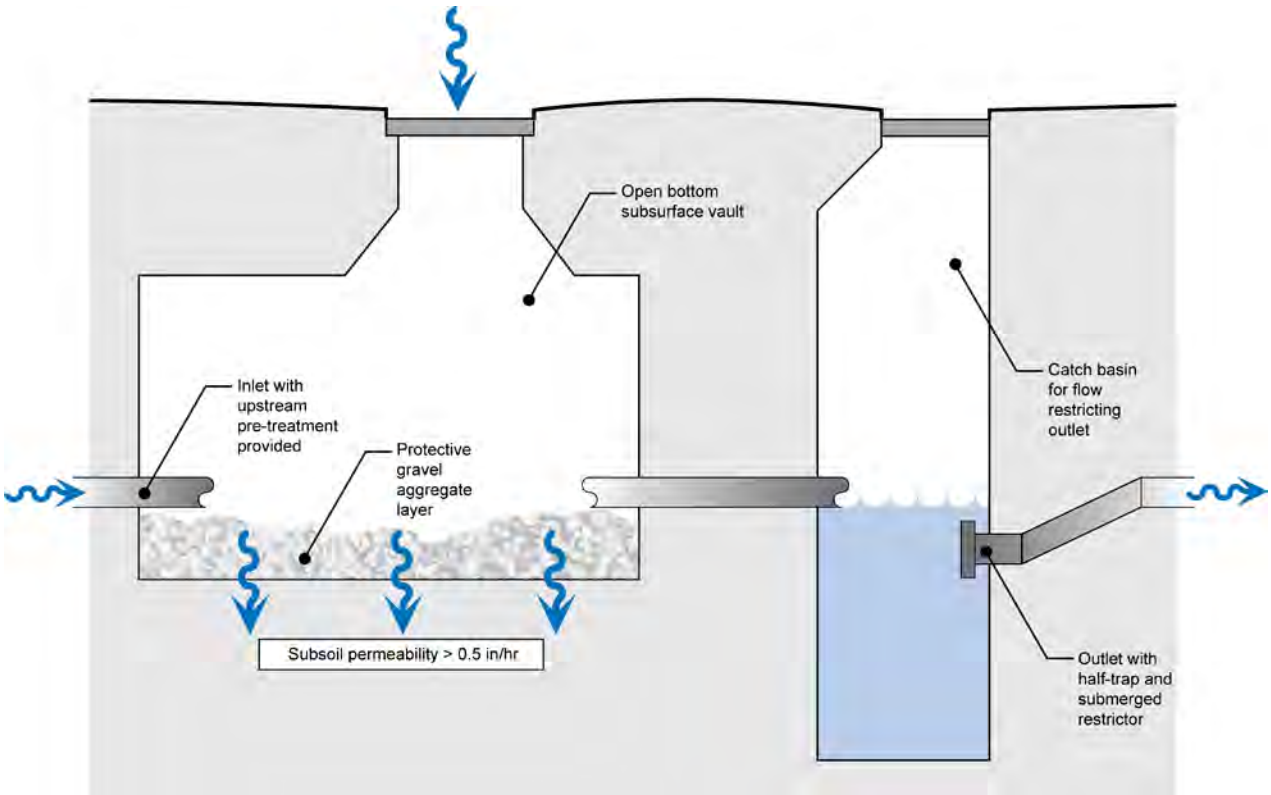

Figure 9: Infiltration Vault

2.1.4 Infiltration Vault

Section 1 Upstream Drainage Area				
1	Upstream impervious area	A_i		square feet
2	Upstream weighted C-value	C		unitless
3	Volume of upstream runoff from a 1-inch storm = C * A_i * 1/12	$V_{upstream}$	0	cubic feet
4	Describe intended function of system (Is it standalone system designed for infiltration, is it integrated as part of the detention storage?)			

Section 2 BMP Feasibilty				
5	Design soil infiltration rate (must be 0.5 in/hr or greater)	i		in/hr
6	Allowable depth of storage (distance below outflow invert plus depth of storage aggregate) = (i / 12 inches/ft * 48 hours)	D_{allow}	0.00	feet
7	Elevation of bottom of BMP (the infiltration surface)	$ELEV_{BMP}$		feet
8	Groundwater elevation	$ELEV_{GW}$		feet
9	Depth to seasonal groundwater (Must be 2 feet or greater, or 3.5 feet or greater if draining to combined sewer)	D_{GW}	0.0	feet

Section 3 BMP Specifications				
10	Dimensions of the infiltration area (length, width, or area)	L		feet
		W		feet
		A_{BMP}	0	square feet
11	Depth of open storage (distance between vault outflow invert and top of aggregate/infiltration bed (D_1 plus D_2 must be less than D_{allow})	D_1		feet
12	Depth of underlying aggregate	D_2		feet
13	Aggregate porosity (0.38 maximum unless detailed materials report provided)	P_1		feet
14	Storage applicable to volume control = (A_{BMP} * D_1)+(A_{BMP} * D1*P_1)	V_{BMP}	0	cubic feet

Section 4 BMP Performance				
15	Volume of upstream runoff (Line 3)	$V_{upstream}$	0	cubic feet
16	Volume Control Storage Provided = V_{BMP}	V_{BMP}	0	cubic feet
17	V_{total} (equals lesser of V_{BMP} or $V_{upstream}$)	V_{total}	0	cubic feet

Appendix D: Case Studies

CASE STUDY 1: Strip Mall Development

CASE STUDY 2: Parking Lot Development

CASE STUDY 3: High-Rise Building over Existing Parking Lot

CASE STUDY 4: High Rise Building over Existing Gravel Lot Without Drainage Structures

CASE STUDY 5: Example of Maximum Critical Local Sewer Release Rate Computations

CASE STUDY 6: Diverted Release Rate Computations

Case Study 1: Strip Mall Development

This case study walks through the use of the Stormwater Spreadsheet Tool.

Step 1: Collect Existing/Proposed Site Information

Existing Conditions:

Area = 15,000 sq ft
Parking Lot = 15,000 sq ft

Proposed Conditions

Roof = 8,400 sq ft
Parking Lot / Driveways = 5,700 sq ft
Pervious Landscape Area = 900 sq ft

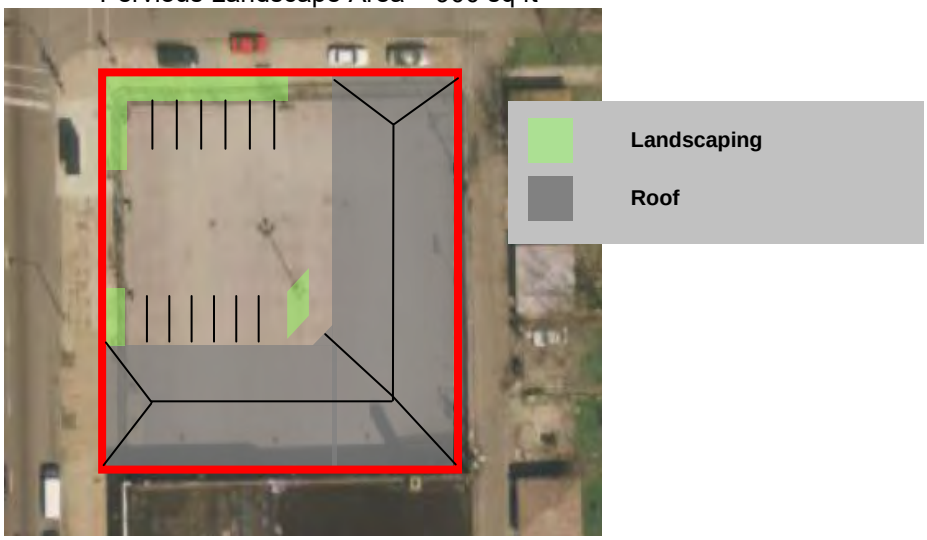

Define Regulatory Status

It is a regulated development due to 15,000 square feet of land disturbance. The development is subject to all performance requirements of the Ordinance.

Step 2: Enter data into the Rate Control Calculations Spreadsheet

Initial Rate Control Calculations:

Assumptions / Data Entry:

Lawns - Heavy soil, avg, 2% to 7% = 900 sq ft
Pavement = 5,700 sq ft
Roof (conventional) = 8,400 sq ft
Question 1: No
Question 2: No
Question 3: No
Question 4: Yes
Question 5: No
Question 6: No
Storm Event: 100-Year
Dry Weather Flow = 0 (for commercial / retail development)
Total BMP Areas = 0

Calculation Results:

Detention Release Rate = 0.15 cfs
Detention Storage to be provided = 3,032 cu ft

Step 3: Enter data into the Volume Control Calculations Spreadsheet

Initial Volume Control Calculations:

Assumptions / Data Entry:

Existing Pavement = 15,000 sq ft
Proposed Lawn or Landscape Area = 900 sq ft
Proposed Pavement = 5,700 sq ft
Proposed Roofs (conventional) = 8,400 sq ft
Question 1: No
Question 2: Yes
Question 3: Yes
Total BMP Areas = 0

Calculation Results:

Existing Impervious = 100%
Proposed Impervious = 94%
Storage required to be Captured = 588 cu ft
Impervious Reduction **not** met (need to be 85%)

Step 4: Determine option(s) to meet the required goals of the Ordinance and Regulations

Try to reduce Impervious % to meet the 85% goal from Volume Control Spreadsheet:

Use Permeable Pavement as pervious area (does not count for storage requirements)

Add 1,350 sq ft of Permeable Pavement. Pavement area reduced to 4,350 sq ft

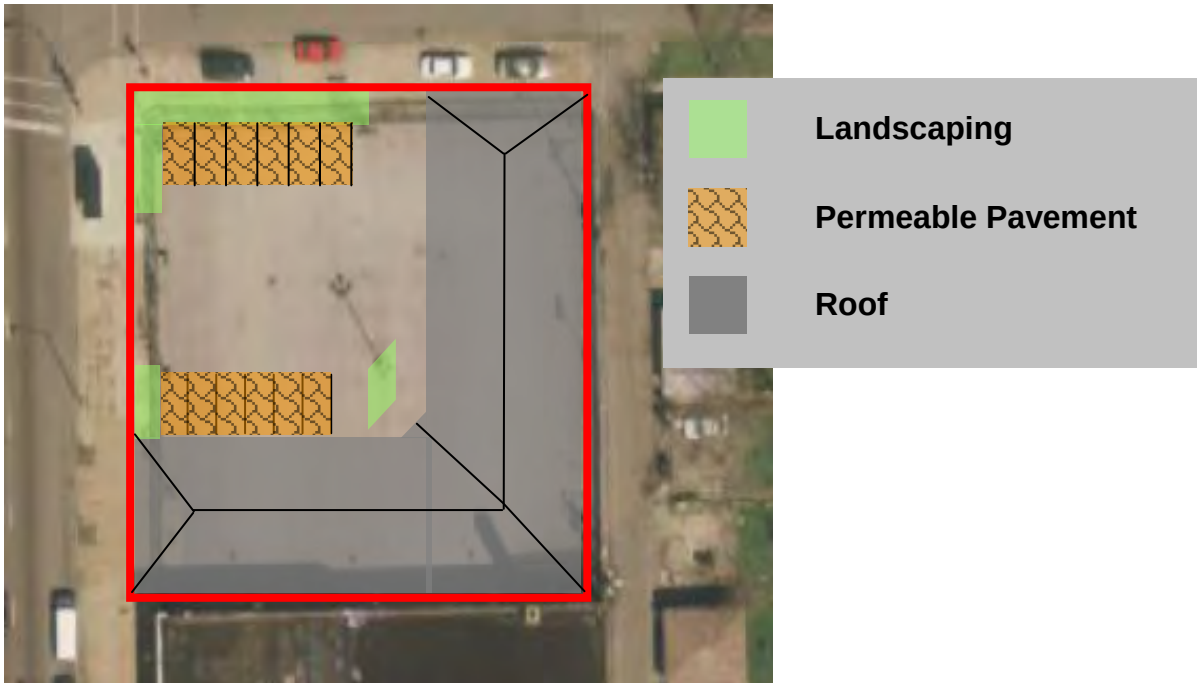

Step 5: Enter data into the BMP Spreadsheets

2.1.6 Permeable Pavement spreadsheet calculations:

Site grading plan drainage delineations show that the Impervious Area (including the BMP) draining to the Permeable Pavement is 3,000 sq ft which comprises 1,350 sq ft of Permeable Pavement and 1,650 of Pavement. The remainder of the pavement either drains toward the roadway or to catch basins on site. The roof discharges to the sewer.

Upstream Impervious Area (including BMP) = 3,000 sq ft
Infiltration = 0.6 in/hr (based on single ring infiltrometer test)
GWD = 5.0 ft (based on site soil boring)

Rather than entering the length and width of the BMP, the total area of the BMP is entered.

Area BMP = 1,350 sq ft
Depth of underlying aggregate = 1.0 ft (based on site design plans)
Porosity of Aggregate = 0.4 (assumed for this site)

Calculation Results:

Volume of Upstream Runoff = 238 cu ft
Volume of BMP Storage = 540 cu ft
Total Volume provided = 238 cu ft

The total volume provided is based on the minimum of the upstream runoff and BMP storage volumes. The calculations only allow the permittee to account for the volume of 1-inch of runoff when the volume provided by the BMP is greater than the runoff. However, if the volume provided by the BMP was less than the volume from 1-inch of runoff, then it would be assumed that the volume in the BMP would be fully utilized and this would be the total volume provided.

Step 6: Update Volume Control Calculations for any BMPs

Volume Control Calculations:

Assumptions / Data Entry:

Existing Pavement = 15,000 sq ft
Proposed Lawn or Landscape Area = 900 sq ft
Proposed Pavement = 4,350 sq ft (changed some to permeable pavement)
Proposed Roofs (conventional) = 8,400 sq ft
Proposed BMPs – Permeable Pavement = 1,350 sq ft
Question 1: No
Question 2: Yes
Question 3: Yes
Total BMP Areas Treated as Impervious Area = 0 sq ft
Total BMP Areas Treated as Pervious Area = 1,350 sq ft (Due to Q3 = Yes)

Calculation Results:

Existing Impervious = 100%
Proposed Impervious = 85%
Storage required to be Captured = 531 cu ft
Impervious Reduction **is** met

Step 7: Choose how to apply the BMPs for Rate Control

BMPs – Rate Control Credit spreadsheet

Only one BMP (Permeable Pavement) is used on this site. For this scenario, the Permeable Pavement will count towards Rate Control volume. Enter "Yes" in the spreadsheet adjacent to the Permeable Paving section under the BMP Areas with Storage COUNTED toward Rate Control Volume table.

Step 8: Update data into the Rate Control Calculations Spreadsheet

Rate Control Calculations:

Assumptions / Data Entry:

Lawns - Heavy soil, avg, 2% to 7% = 900 sq ft
Pavement = 4,350 sq ft (changed some to permeable pavement)
Roof (conventional) = 8,400 sq ft
Question 1: No
Question 2: No
Question 3: No
Question 4: Yes
Question 5: No
Question 6: No
Storm Event: 100-Year
Dry Weather Flow = 0 (for commercial / retail development)

Calculation Results:

Total BMP Areas counting toward Rate Control volume = 1,350 sq ft
C-Value for BMP Areas counting toward Rate Control volume = 0.95
C-Value for site (non BMP areas) = 0.92
C-Value for site (adjusted for BMP areas) = 0.92

The size of the BMP for this site does not have a significant impact to the adjusted C-value for this site.

Detention Release Rate = 0.15 cfs
Infiltration Release Rate = 0.019 cfs (from Permeable Pavement)
Release rate for detention calculations = 0.169 cfs
Required Storage Volume = 2,914 cu ft
Eligible BMP Storage Volume = 238 cu ft (from Permeable Pavement)
Detention Storage to be provided in facility = 2,677 cu ft

Step 9: Design Detention Facility

Need to provide 2,677 cu ft of detention volume restricted at 0.15 cfs. Note that the release rate from the detention facility is 0.15 cfs while the release rate for the site is 0.169 cfs. The difference in release rate is due to flow being released through infiltration with the Permeable Pavement BMP.

Provide oversized pipe system:
137-ft of 60" Diameter RCP (Volume = 2,689 cu ft)
Utilize City of Chicago 3-inch restrictor

Summary

Rate Control Volume Requirement = 2,914 cu ft
Rate Control Release Rate = 0.169 cfs
Rate Control Volume Satisfied by:
- Permeable Pavement Volume = 238 cu ft
- Oversized Pipe Volume = 2,689 cu ft
- Total Volume = 2,927 cu ft

Rate Control Release Rate Satisfied by:
- Permeable Pavement Infiltration = 0.019 cfs
- City of Chicago 3-inch restrictor = 0.15 cfs
- Total Release Rate = 0.169 cfs

Volume Control Requirement:
- Provide 531 cu ft of Volume Control volume or reduce the proposed site's impervious % to 85%.
- Volume control met by reducing the site's % impervious to 85%.

Final Proposed Conditions

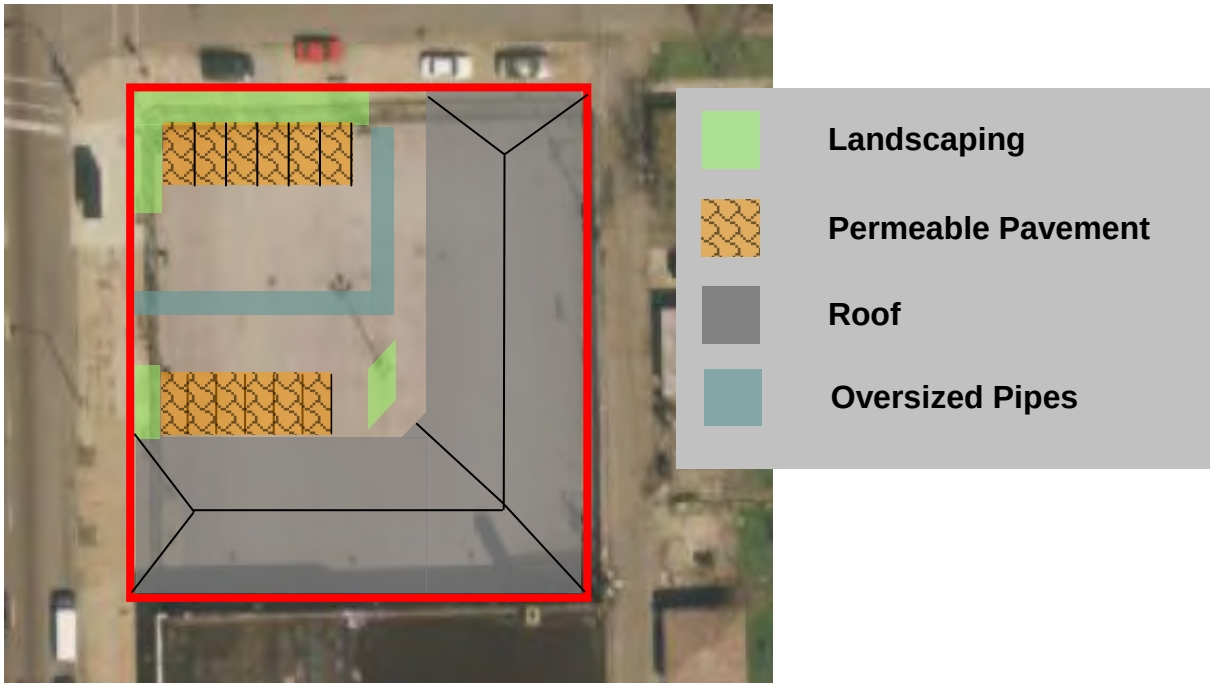

Case Study 2: Parking Lot Development

This case study walks through the use of the Stormwater Spreadsheet Tool.

Existing Conditions:

Area = 8,500 sq ft
Open Space = 8,500 sq ft

Proposed Conditions

Parking Lot / Driveways = 7,900 sq ft
Landscape Area = 600 sq ft

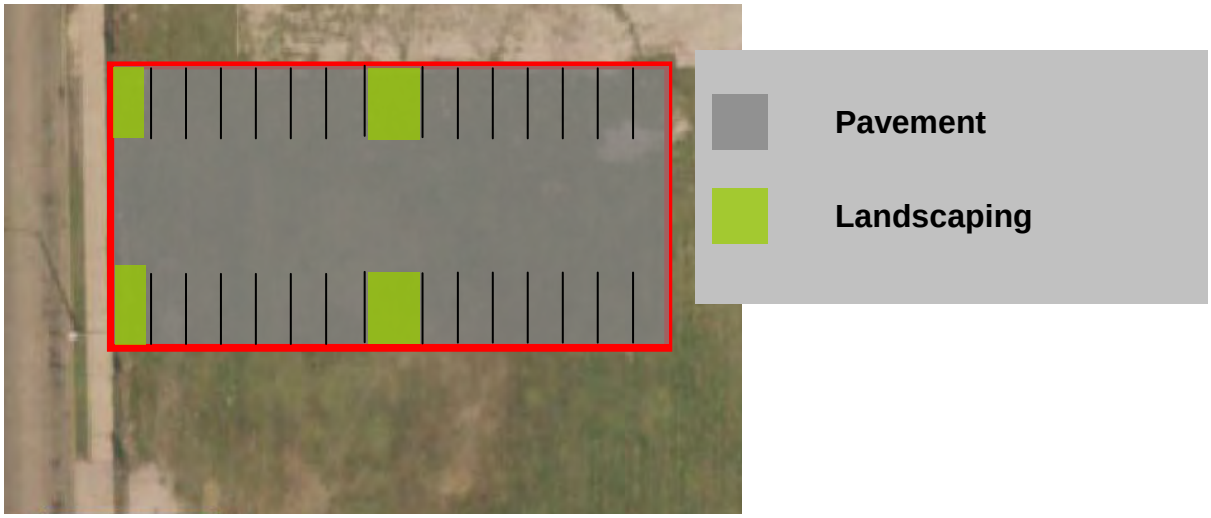

Define Regulatory Status

It is a regulated development due to 7,500 square feet new at-grade impervious area. The development is subject to all performance requirements of the Ordinance.

Initial Rate Control Calculations:

Assumptions / Data Entry:

Lawns - Heavy soil, avg, 2% to 7% = 600 sq ft
Pavement = 7,900 sq ft
Question 1: No
Question 2: No
Question 3: No
Question 4: Yes
Question 5: No
Question 6: No
Storm Event: 100-Year
Dry Weather Flow = 0
Total BMP Areas = 0

Calculation Results:

Detention Release Rate = 0.15 cfs
Detention Storage to be provided = 1,378 cu ft

Initial Volume Control Calculations:

Assumptions / Data Entry:

Existing Lawn or landscape Area = 8,500 sq ft
Proposed Lawn or Landscape Area = 600 sq ft
Proposed Pavement = 7,900 sq ft
Question 1: No
Question 2: Yes
Question 3: Yes
Total BMP Areas = 0

Calculation Results:

Existing Impervious = 0%
Proposed Impervious = 92.9%
Storage required to be Captured = 329 cu ft
Impervious Reduction **not** met (cannot be met due to 0% ex impervious)

Add Bioinfiltration on a portion of the landscape areas to meet the Volume Control requirements.

2.1.1 Bioinfiltration spreadsheet calculations:

Based on proposed grading plans, 3,600 sq ft of pavement drains to the bioinfiltration BMPs (Ai = 3,600 sq ft).

Provide 380 sq ft of Bioinfiltration BMPs in two landscaped areas.
Infiltration = 0.6 in/hr (based on single ring infiltrometer test)
GWD = 5.0 ft (based on site soil boring)
Depth of prepared BMP soil = 1.5 ft
Porosity of Soil assumed to be = 0.3
Depth of aggregate = 0.5 ft
Porosity of aggregate assumed to be = 0.4
Total depth of Bioinfiltration BMP = 2.0 ft (soil + aggregate)
Air Space Storage: Assume that water can cover 4” of the BMP (max = 6”)

The volume of upstream runoff is 332 cu ft and the volume of the BMP is 372 cu ft. The ordinance only allows capture of the lesser of these, so the volume of the BMP is 332 cu ft (based on the upstream runoff).

Rate Control Calculations:

Assumptions / Data Entry:

Lawns - Heavy soil, avg, 2% to 7% = 220 sq ft
BMPs counted toward rate control = 380 sq ft
Pavement = 7,900 sq ft
Question 1: No

Question 2: No
Question 3: No
Question 4: Yes
Question 5: No
Question 6: No
Storm Event: 100-Year
Dry Weather Flow = 0

Calculation Results:

Detention Release Rate = 0.15 cfs
Infiltration Release Rate = 0.005 cfs (from Bioinfiltration)
Release rate for detention calculations = 0.155 cfs
Required Storage Volume = 1,414 cu ft
Eligible BMP Storage Volume = 332 cu ft (from Bioinfiltration)
Detention Storage to be provided in facility = 1,082 cu ft

Volume Control Calculations:

Assumptions / Data Entry:

Existing Lawn or landscape Area = 8,500 sq ft
Proposed Lawn or Landscape Area = 220 sq ft
Proposed BMP Area = 380 sq ft
Proposed Pavement = 7,900 sq ft
Question 1: No
Question 2: Yes
Question 3: Yes

Calculation Results:

Existing Impervious = 0%
Proposed Impervious = 92.9%
Storage required to be Captured = 329 cu ft
Impervious Reduction **not** met (cannot be met due to 0% ex impervious)
Does not change from initial because BMP is still acting as pervious area.

Proposed Detention Facility for Rate Control Volume

Provide oversized pipe system:
87-ft of 48” Diameter RCP (Volume = 1093 cu ft)
Utilize City of Chicago 3-inch restrictor

CASE STUDY 3: High Rise Building over Existing Parking Lot

This case study provides sample computations for computing the DWM storage requirements for volume and rate control for a hypothetical 50-story, two-level building to be constructed over an existing parking lot.

Given:
The existing parking lot (C = 0.85) has an area 30,000 sf (0.688 ac) and has a 6-inch connection. The existing parking lot sheet flows toward the location of the proposed building and must be by-passed through the proposed detention facility. The disturbed area consists of the proposed building 12,000 sf (0.275 ac) and 2000 sf (0.046 ac) of surrounding open green area. The 12,000 sf building roof will be 50 percent green (5-inches thick). The critical sidewall area between the upper and lower level roof is 25,000 sf (0.574 ac). The proposed average DWF is 1.6 cfs. The maximum release rate has been calculated as 0.3 cfs/acres.

Disturbed Area: 0.275 + 0.046 = 0.321 ac, which is < 15,000 sf
Regulatory Area : 0.275 + 0.046 + (0.574*25%) + 1.6 = 2.06 ac, now > 15,000 sf Reg. Site
Lot-to-lot: 0.275/(0.275+0.046) * 100 = 0.857 > 85%, Considered as lot-to-lot

Volume Control Requirements:
Green Roof Area: 12,000 / 2 = 6000 sf, 0.137 ac
Check for 15% reduction:
0.046 + 0.137 = 0 .183 ac green
100- [0.183 / 0.321] * 100 = 43 % > 15 %, requirements met

Rate Control Requirements:
For lot-to-lot development:

Release Rate (RR): 0.321 ac * 0.3 cfs/acre= .0963 cfs < 0.15 cfs, Utilize Standard RR, subject to DWF

Check 10% DWF: 10% x 1.6 cfs > 0.15 cfs, May need 25 gpm as release rate

Check Existing Conditions:
Existing 5-year Discharge = 0.688 ac *0.85 * 5.8”/hr = 3.39 cfs
Existing 6” connection capacity, Q = 0.61*0.196 *SQRT(64.4*5’) = 2.14 < 3.39 cfs
Use 2.14 cfs, as existing discharge rate based on an assumed 5 feet of maximum head

Proposed 5-year Discharge = 1.6 cfs + 0.15 cfs = 1.75 cfs < 2.14 cfs, maybe ok to use 3” vortex with 0.15 cfs.

10-year Building:
D.A.= 0.275+(0.574*25%) = 0.4185 ac
C = [(0.275)(0.95+0.3)/2 + (0.574*25%*0.95)] / 0.4185 = 0.74
RR = 0.15*(0.275/0.321)* 1.10 = 0.141 cfs (portion of release rate attributable to building)
10-yr Storage = 1785 cf

100-year Open Area:
D.A. = 0.046 ac
C= 0.3
RR = 0.15*(0.046/0.321)* 1.1 = 0.021 cfs (portion of release rate attributable to ground surface)
100-yr Storage = 79 cf

Total Required Storage= 1785 + 79 = 1874 cf

Check 25-year w/ Offsite:
D.A. = 0.688 + (0.574*25%) = 0.832 ac
C = [(0.4185 * 0.74) + (0.046*0.3) + (0.832-0.4185-0.046)* 0.95] / 0.832 = 0.808
RR= 0.15 cfs, w/vortex restrictor
Required storage @ 0.15 cfs would be 6003 cf >> 1874 cf, NG
++Required Storage @ 0.5 cfs would be 3963 cf
Utilize 3963 cf as new total onsite required storage.

Adopted Restrictor Size:
Since the upstream drainage area (0.367 ac) is greater than the disturbed area (0.321 ac), the DWM will allow an increase in the 0.15 cfs release rate; however, the existing discharge rate of 2.14 cfs cannot be increased. A release rate of 0.5 cfs (for 25 year storm) would be acceptable since the proposed discharge rate of 0.5 + 1.6 = 2.10 cfs is less 2.14 cfs. Therefore, the restrictor size will be approximately 3-inches in diameter reflecting a 0.5 cfs maximum release rate for a 25-year storm event. Means to accommodate overflows up to a 100-year storm event must be considered.

Check Actual 100-year w/ Offsite:
D.A. = 0.832 ac
C= 0.808
RR = 0.5 cfs, w/3-inch orifice
Storage = 5441 cf,
100–year Overflow Volume = 5441-3963 = 1478 cf

CASE STUDY 4: High Rise Building over Existing Gravel Lot without Drainage Structures

This case study provides sample computations for computing the DWM storage requirements for volume and rate control for a hypothetical 50-story, two-level building to be constructed over a vacant gravel lot without drainage structures.

Given:
Same as Case 3, except the existing 30,000 sf (0.688 ac) parking lot consists of dirt/grass (C = 0.50) and sheet flows towards the proposed development. The proposed green roof does not have any other roof area tributary to it.

Volume Control Requirements:
Required volume: 0.5”/12*12,000 sf roof * 50% impervious = 250 cf
Utilize oversized detention

Rate Control Requirements:

Check Existing Conditions:
Since there are no onsite sewers and the equivalent disturbed area (2.06 ac) is greater than 0.5 acres, the development is considered a diversion. The existing discharge is considered as zero.

Proposed 5-year Discharge = 1.6 cfs + 0.15 cfs = 1.75 cfs >> 0 cfs
Must consider 25 gpm (0.055 cfs) release rate for site.

Check 100-year for Site:
D.A. = 0.4185+0.046 = 0.465 ac
C= [(0.4185*0.74)+(0.046*0.3)]/0.465 = 0.70
RR = 0.055 cfs
Minimum Storage = 4118 cf

Check 25-year w/Offsite:
D.A. = 0.688 + (0.574*25%) = 0.832 ac
C = [(0.4185 * 0.74) + (0.046*0.3) + (0.832-0.4185-0.046)* 0.5] / 0.832 = 0.61
RR= 0.055 cfs
Maximum Storage = 7126 cf

In this case, a negotiated settlement with the DWM is required since it may not be practical to have a pumped discharge with offsite runoff. Other alternatives, such as surface ponding on the existing lot should be considered. Since the capacity of the existing city sewer is poor (0.30 cfs/ac), no more than a 3-inch vortex would likely be allowed with a corresponding storage requirement of 5441 cf (from case 3- w/offsite). With oversized detention, the total comes to 5691 (5441 + 250) cf.

Check Actual Capacity w/ Offsite:
D.A. = 0.688 + (0.574*25%) = 0.832 ac
C = [(0.4185 * 0.74) + (0.046*0.3) + (0.832-0.4185-0.046)* 0.50] / 0.832 = 0.61
RR= 0.15 cfs, w/3” vortex restrictor
Storage = 5609 cf

Since 5609 cf < 5691 cf,
Acceptable to use 5609 cf as the required onsite storage

CASE STUDY 5: Maximum Critical Local Sewer Release Rate Computations

Determine:

Compute Maximum Release Rate for a hypothetical 5 acre development located within 111th St., 112th St.,Bell Av. and Hoyne Av.

Step 1: Obtain Sewer Atlas Maps and Drain Atlas Maps

Locate the development on the maps and determine to which sewer the development will discharge. In this situation, the development ultimately discharges to both a 3.5 ft sewer and a 2.0 ft sewer at the railroad at Prospect and 111th. Since the size of the connection sewer is not larger than 3.5 feet, the local sewer capacity calculations must be completed.

Step 2: Delineate drainage areas and assign land uses from development to upstream end of drainage basin. (see exhibits at end of Case Study 3)

Drainage Area (acres)	Land Use	Weight Factor
22.8	Residential	1.0
34.1	Residential	1.0
9.81	Residential	1.0
7.22	Residential	1.0
11.7	Residential	1.0

Weighted Drainage Area =
=(22.8 x 1.0)+ (34.1 x 1.0) + (9.81 x 1.0) + (7.22 x 1.0) + (11.7 x 1.0)
= 85.63 acres

Step 3: Determine Outlet Sewer Capacity

Outlet Sewer Capacity is based on Appendix III-A of the stormwater regulations.
Basin #218
Outlet Sewer Capacity = 0.70 cfs/acre

Step 4: Determine Local Sewer Capacity

Sewer Segment 1

42" in Prospect at Railroad	2' in 111th at Railroad
u/s= 34.58	u/s= 37.6
d/s= 31.33	d/s=36.8
L= 780', n=0.013	L=330', n=0.015
S=0.00416	S=0.0024
Q= 65.1 cfs	Q=9.6 cfs

Weighted Drainage Area = Total area calculated above = 85.63 acres
Local Sewer Capacity (Segment 1) = (65.1+9.6)/85.63 = 0.87 cfs/acre

Sewer Segment 2
In 111th at Longwood
Dia. =2.0'
u/s= 58.85
d/s=37.6
L=380', n=0.015
S=0.0559
Q= 46.5 cfs

Weighted Drainage Area
11.7 (Residential) x 1.0 + 7.22 (Residential) x 1.0 + 9.81 (Residential) x 1.0 + 34.1 (Residential) x 1.0 = 62.83 acres
Local Sewer Capacity (Segment 2) = 46.5/62.83 = 0.74 cfs/acre

Sewer Segment 3
In 111th at Hoyne
Dia. =2.0'
u/s= 72.5
d/s=71.5
L=965', n=0.015
S=0.0010
Q=6.22 cfs

Weighted Drainage Area= 11.7 acres (Residential) x 1.0 = 11.7 acres
Local Sewer Capacity (Segment 3) = 6.22/11.7=0.53 cfs/acre

Sewer Segment 4
In Hoyne at 111th
Dia.= 1.25'
u/s=73.1
d/s=71.5-[(71.5-69.06)(100/230)]= 70.44
L=1200', n=0.011
S=0.0022
Q=3.59 cfs

Weighted Drainage Area= 7.22 (Residential) x 1.0 + 9.81 (Residential) x 1.0 =17.03 acres
Local Sewer Capacity (Segment 4) = 3.59/17.4=0.21 cfs/acre

Sewer Segment 5
In 112th at Hoyne
Dia.= 1.0'
u/s= 73.5
d/s= 73.1- [(73.1-71.5)(320'/1200')] = 72.67
L= 700', n=0.011
S=0.00118
Q=1.45 cfs

Weighted Drainage Area= 7.22 (Residential) x 1.0 = 7.22 acres
Local Sewer Capacity (Segment 5) = 1.45/7.22= 0.20 cfs/acre

Step 5: Determine the Critical Local Sewer Capacity

42" in Prospect at Railroad 2' in 111th at Railroad
Local Sewer Capacity = 0.87 (Sewer Segment 1)

In 111th at Longwood
Local Sewer Capacity = 0.74 (Sewer Segment 2)

In 111th at Hoyne
Local Sewer Capacity = 0.53 cfs/acre (Sewer Segment 3)

In Hoyne at 111th

Local Sewer Capacity = 0.21 cfs/acre (Sewer Segment 4)

In 112th at Hoyne
Local Sewer Capacity = 0.20 cfs/acre (Sewer Segment 5)

The Critical Local Sewer Capacity is the smallest of the Local Sewer Capcacities.
Critical Local Sewer Capacity = 0.20 cfs/acre

The Outlet Sewer Capacity for the drainage area named “Laflin & Wood” is 0.34 cfs/acre. Since the Critical Local Sewer Capacity is less than the Outlet Capcatity, the Critical Local Sewer Capacity determines the allowable release rate for the site.

Release Rate: 0.20 cfs/acre (based on Sewer Segment 5)

Sewer atlases depicting the drainage area delineations are included on the following pages.

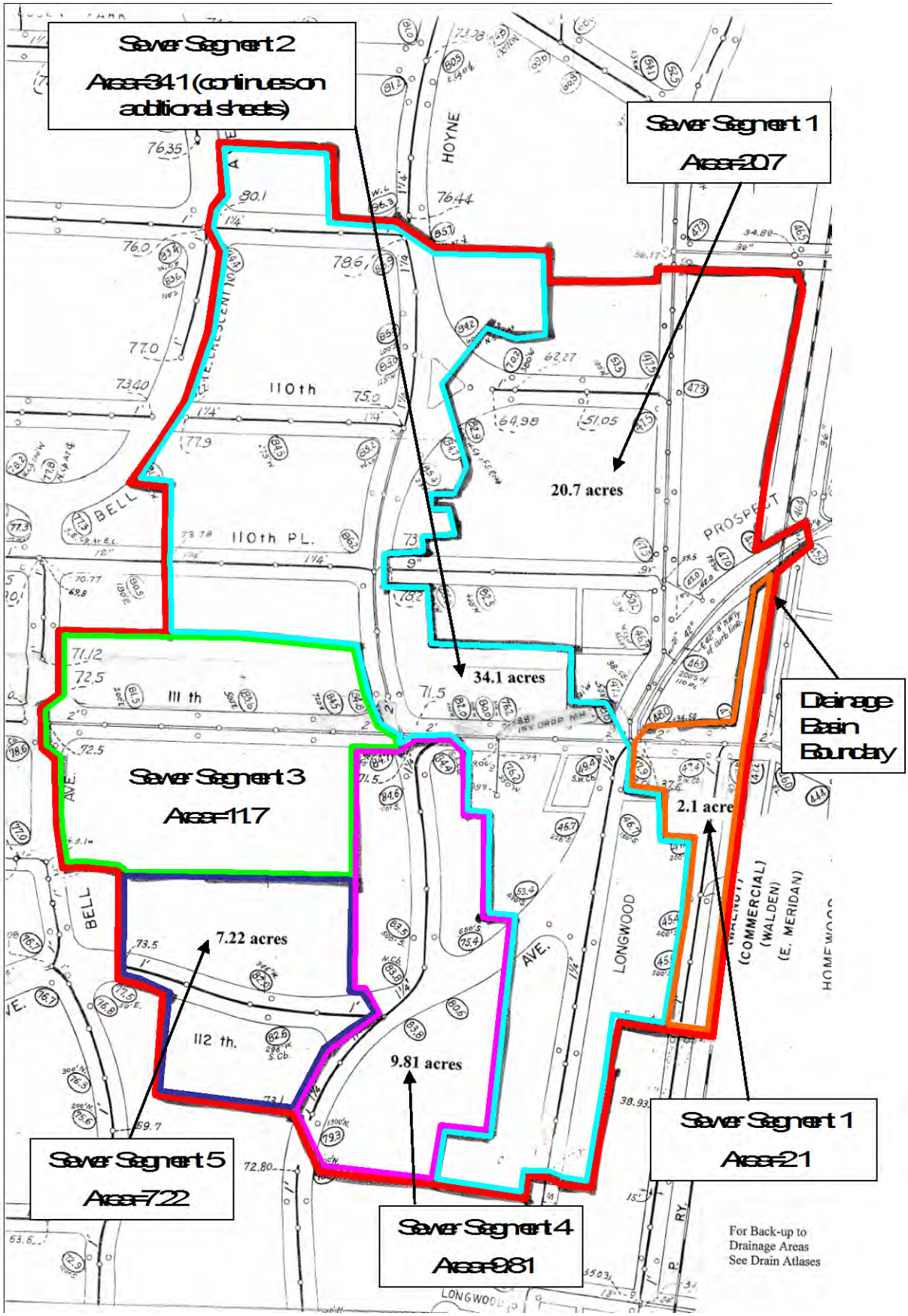
Sewer Segment 2
Area=34.1 (continues on additional sheets)
Sewer Segment 1
Area=20.7
20.7 acres
34.1 acres
Drainage Basin Boundary
Sewer Segment 3
Area=11.7
2.1 acres
7.22 acres
9.81 acres
Sewer Segment 1
Area=2.1
Sewer Segment 5
Area=7.22
Sewer Segment 4
Area=9.81
For Back-up to Drainage Areas See Drain Atlases
HOYNE
110th
110th PL.
111 th
112 th.
BELL
PROSPECT
LONGWOOD
AVE.
(COMMERCIAL)
(WALDEN)
(E. MERIDAN)

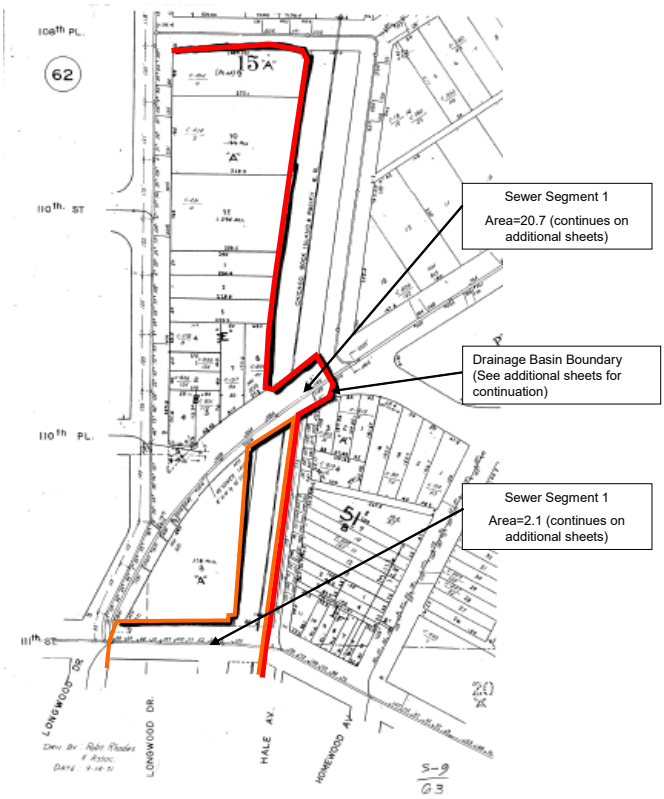
Sewer Segment 1
Area=20.7 (continues on additional sheets)
Drainage Basin Boundary (See additional sheets for continuation)
Sewer Segment 1
Area=2.1 (continues on additional sheets)
108th PL.
110th. ST
110th PL.
111th ST
LONGWOOD DR.
HALE AV.
HOMEWOOD AV.

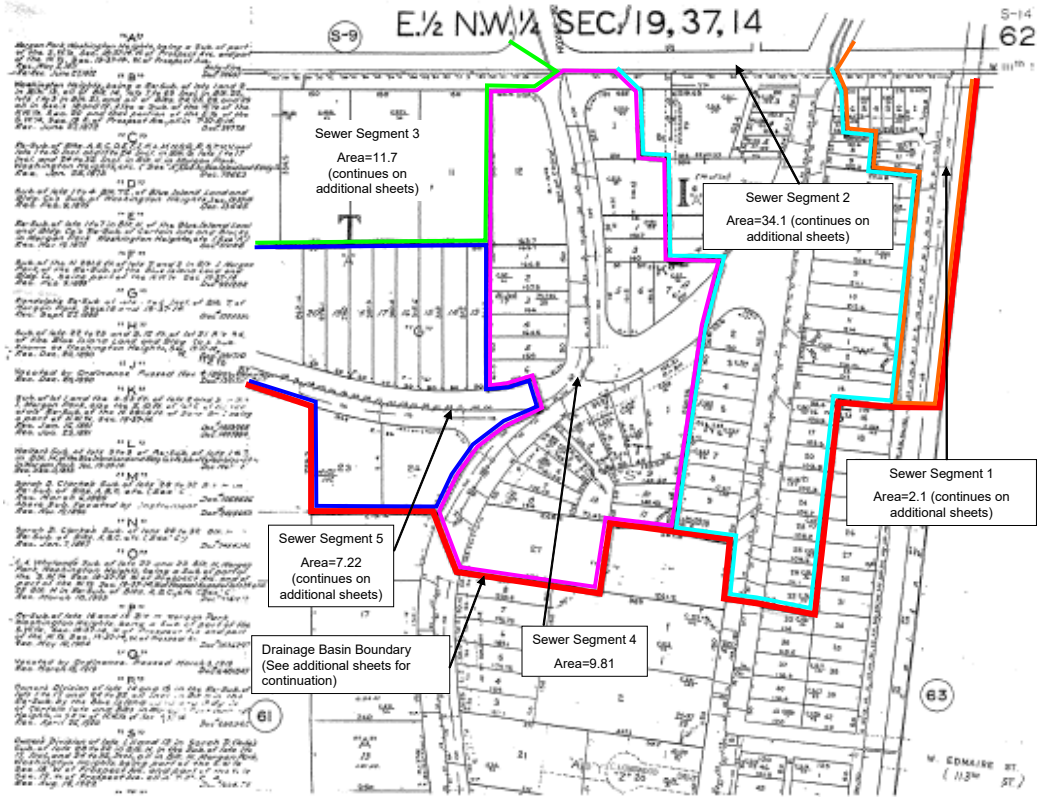
E.½ N.W.¼ SEC. 19, 37, 14
Sewer Segment 3
Area=11.7 (continues on additional sheets)
Sewer Segment 2
Area=34.1 (continues on additional sheets)
Sewer Segment 1
Area=2.1 (continues on additional sheets)
Sewer Segment 5
Area=7.22 (continues on additional sheets)
Sewer Segment 4
Area=9.81
Drainage Basin Boundary (See additional sheets for continuation)

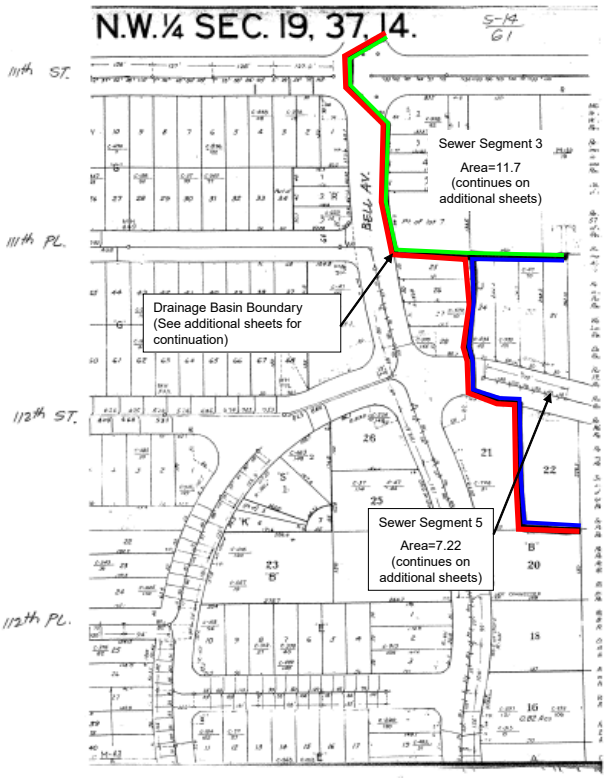
N.W.¼ SEC. 19, 37, 14.
111th ST.
111th PL.
112th ST.
112th PL.
BELL AV.
Sewer Segment 3
Area=11.7
(continues on additional sheets)
Drainage Basin Boundary
(See additional sheets for continuation)
Sewer Segment 5
Area=7.22
(continues on additional sheets)

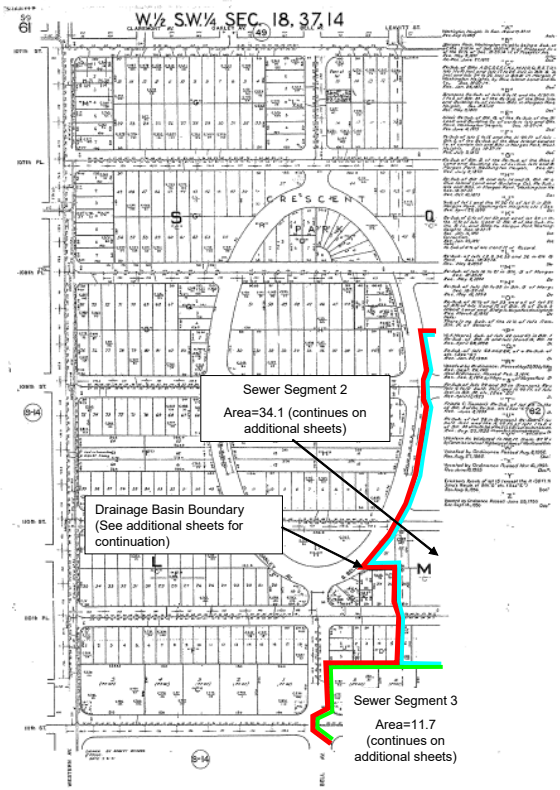
W.½ S.W.¼ SEC. 18, 37, 14
CRESCENT
PARK
Sewer Segment 2
Area=34.1 (continues on additional sheets)
Drainage Basin Boundary
(See additional sheets for continuation)
Sewer Segment 3
Area=11.7
(continues on additional sheets)

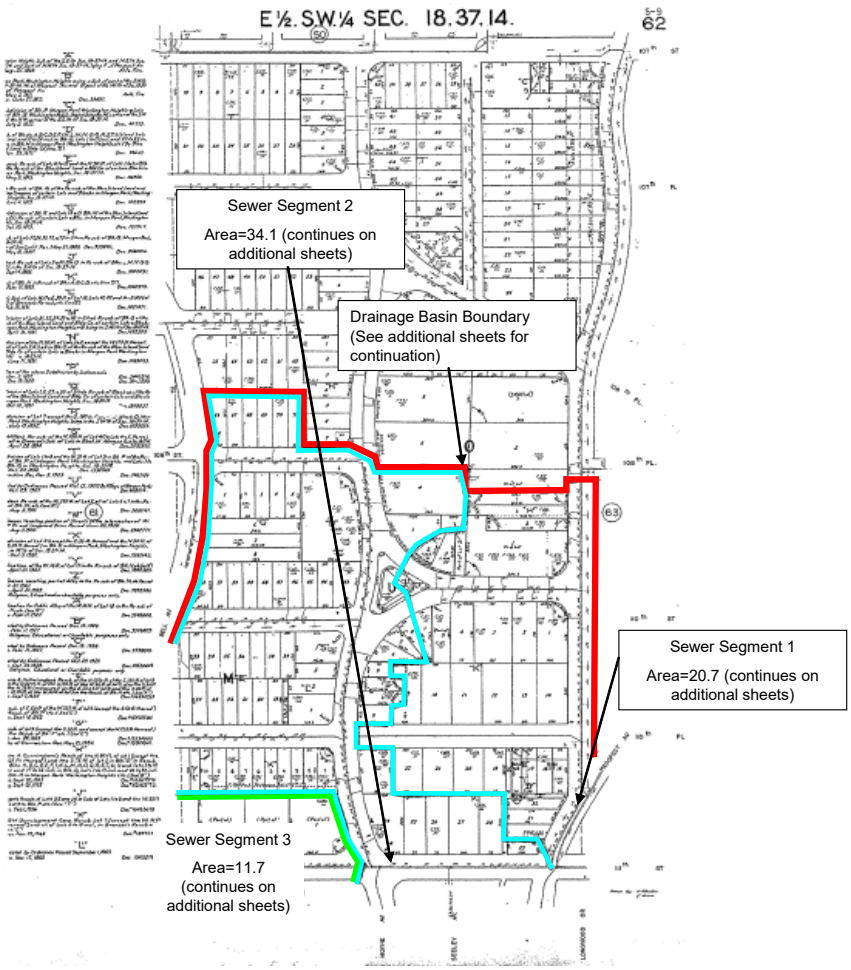
E ½ S.W.¼ SEC. 18.37.14.
62
Sewer Segment 2
Area=34.1 (continues on additional sheets)
Drainage Basin Boundary (See additional sheets for continuation)
Sewer Segment 1
Area=20.7 (continues on additional sheets)
Sewer Segment 3
Area=11.7 (continues on additional sheets)

CASE STUDY 6: Diverted Release Rate Computations

Determine:

Compute a diverted release rate for a hypothetical development under 3 different scenarios having different diverted site areas.

Given for scenario 1:
Sewer capacity = 10 cfs
Existing Drainage area of sewer (not including diverted area)= 19.0 acres
Diverted site area = 1.0 acres

Given for scenario 2:
Sewer capacity = 10 cfs
Existing Drainage area of sewer (not including diverted area)= 19.0 acres
Diverted site area = 10 acres

Given for scenario 3:
Sewer capacity = 10 cfs
Existing Drainage area of sewer (not including diverted area)= 19.0 acres
Diverted site area = 0.5 acres

Step 1: Determine release rate without diverted area

Sewer capacity / existing drainage area of sewer
Scenarios 1-3: 10 cfs / 19 acres= 0.52 cfs/acre

Step 2: Determine release rate including maximum reduction (3%-5%)

Release rate from #1 x maximum reduction percentage of allowed based on release rate (see regulations Chap 2, Sect 3.6) = max. reduced release rate
Scenarios 1-3: 0.52 cfs/acre x 0.97 = 0.505

Step 3: Calculate maximum diverted area allowed

Sewer capacity / (existing drainage area of sewer + maximum diverted area) = max. reduced release rate
Scenarios 1-3: 10 cfs / (19 acres + Y) = 0.505 Y = 0.80 acres

Step 4: If actual diverted area is greater than maximum area allowed, solve for new site release rate

Actual diverted area > Max. allowed diverted area (calculated in #3)
Scenario 1: 1.0 acre > 0.80 acre
Scenario 2: 10.0 acre > 0.80 acre
Scenario 3: not applicable; skip this step

Existing drainage area of sewer x max. reduced release rate) + (Actual diverted area x release rate for diverted area)
Scenario 1: (19 acres x 0.505 cfs/acre) + (1.0 acre x Z) = 10 cfs Z = 0.405 cfs/acre
Scenario 2: (19 acres x 0.505 cfs/acre) + (10.0 acre x Z) = 10 cfs Z = 0.041 cfs/acre; use 25 GPM pump (0.056 cfs)
Scenario 3: not applicable; skip this step

Step 5: If actual diverted area is less than maximum area allowed, solve for new site release rate

Actual diverted area < Max. allowed diverted area (calculated in #3)
Scenario 1-2: not applicable; skip this step
Scenario 3: 0.50 acre < 0.80 acre

Sewer capacity / (existing drainage area of sewer + actual diverted site area) = site release rate
Scenario 1-2: not applicable; skip this step
Scenario 3: 10 cfs / (19 acres + 0.50 acres) = 0.513 cfs/acre

(End of Appendix D)

Appendix F

Chicago Sustainability Development Policy Matrix

Chicago Sustainable Development Policy 2017.01.12

DPD
CHICAGO DEPARTMENT OF PLANNING & DEVELOPMENT

Compliance Options	Points Required		Sustainable Strategies Menu																																
			Health	Energy							Stormwater						Landscapes				Green Roofs		Water		Transportation							Solid Waste	Work Force	Wildlife	
					Choose one				Choose one		Choose one										Choose one		Choose one											Choose one	
Compliance Paths	Starting Points	Number of Optional Points Required New Construction / Substantial Rehab / Moderate Rehab	1.1 Achieve WELL Building Standard	2.1 Designed to earn the Energy Star	2.2 Exceed Energy Code (5%)	2.3 Exeed Energy Code (10%)	2.4 Exeed Energy Code (25%)	2.5 Exeed Energy Code (40%)	2.6 Onsite Renewable Energy (3%)	2.7 Onsite Renewable Energy (5%)	3.1 Exceed Stormwater Ordinance by 25%	3.2 Exceed Stormwater Ordinance by 50%	3.3 100% Stormwater Infiltration	3.4 Sump Pump Capture & Reuse	3.5 100-year detention for lot-to-lot buildings	3.6 100-year Detention for Bypass	4.1 Working Landscapes	4.2 Natural Landscapes	4.3 Tree Planting	4.4 Achieve Sustainable Sites Certification	5.1 Green Roof 50-100%	5.2 Green Roof 100%	6.1 Indoor Water Use Reduction (25%)	6.2 Indoor Water Use Reduction (40%)	7.1 Proximity to Transit Service	7.2 Bikeshare Sponsorship	7.3 Bike Parking Residential	7.4 Bike Parking Commercial & Industrial	7.5 EV Charging Stations	7.6 EV Charger Readiness	7.7 CTA Digital Displays	8.1 80% Waste Diversion	8.2 Workforce Development	9.1 Bird Protection (Basic)	9.2 Bird Protection (Enhanced)
Options Without Certification																																			
All Options Available	0	100 / 50 / 25	40	30	20	30	40	50	10	20	10	20	40	5	5	5	5	5	5	20	10	20	10	20	5	5	5	5	10	5	5	10	10	5	10
Options With Certification																																			
LEED Platinum	95	5 / 0 / 0	40	NA	NA	NA	NA	NA	NA	NA	10	20	40	5	5	5	NA	NA	NA	20	10	20	NA	NA	NA	5	NA	NA	NA	5	5	NA	10	5	10
LEED Gold	90	10 / 0 / 0	40	NA	NA	NA	NA	50	10	20	10	20	40	5	5	5	5	NA	5	20	10	20	NA	NA	NA	5	NA	NA	10	5	5	10	10	5	10
LEED Silver	80	20 / 0 / 0	40	NA	NA	NA	40	50	10	20	10	20	40	5	5	5	5	5	5	20	10	20	NA	20	NA	5	NA	NA	10	5	5	10	10	5	10
Green Globes 4-Globes	90	10 / 0 / 0	40	NA	NA	NA	NA	50	10	20	10	20	40	5	5	5	5	NA	5	20	10	20	NA	NA	NA	5	NA	NA	10	5	5	10	10	5	10
Green Globes 3-Globes	80	20 / 0 / 0	40	NA	NA	NA	40	50	10	20	10	20	40	5	5	5	5	NA	5	20	10	20	NA	NA	NA	5	NA	NA	10	5	5	10	10	5	10
Green Globes 2-Globes	70	30 / 0 / 0	40	NA	NA	NA	40	50	10	20	10	20	40	5	5	5	5	5	5	20	10	20	NA	20	NA	5	NA	NA	10	5	5	10	10	5	10
Living Building Challenge	100	0 / 0 / 0	40	NA	NA	NA	NA	NA	NA	NA	10	20	40	5	5	5	NA	NA	NA	20	NA	NA	NA	NA	NA	NA	NA	NA	10	5	NA	NA	10	5	10
Living Building Challenge Petal	90	10 / 0 / 0	40	NA	20	30	40	50	NA	NA	10	20	40	5	5	5	5	NA	5	20	10	20	10	20	NA	5	NA	NA	10	5	5	10	10	5	10
Enterprise Green Communities*	80	20 / 0 / 0	40	NA	NA	NA	NA	NA	10	20	10	20	40	5	5	5	5	5	5	20	10	20	10	20	5	5	NA	NA	10	5	5	10	10	5	10
PassiveHouse	70	30 / 0 / 0	40	NA	NA	NA	NA	NA	10	20	10	20	40	5	5	5	5	5	5	20	10	20	10	20	5	5	5	5	10	5	5	10	10	5	10

*only available to affordable housing projects funded by DPD's Housing Bureau

Planned Development Projects (PD) - New Construction	**100 points required**
TIF Funded Development Projects (TIF) - New Construction*	**100 points required**
DPD Housing, Multi-family (>5 units) Projects (DPD-H MF) - New Constructio	**100 points required**
PD, TIF, DPD-H MF and Class L - Renovation Projects*	
Moderate Renovation Projects	**25 points required**
Substantial Renovation Projects	**50 points required**

*does not apply to TIF assistance of less than $1M (including but not limited to TIF-NIP, TIF Purchase Rehab, Streamlined TIF and SBIF programs)

Moderate Renovation Projects = projects including partial or minor upgrades to building sytems and minor repairs to the exterior envelope
Substantial Renovation Projects = projects including new and/or upgraded building systems and extensive repairs to the exterior envelope